REVISIONS

FOR CONTINUATION OF REVISIONS SEE SHEET 1.11

CHANGE LTR	ITEM NO.	SHEET NO.	ZONE	GRUMMAN INFO ONLY	DET SPEC	CLASS I	CLASS II	ENGRG ORDER	DESCRIPTION	EFFECTIVITY	DISPOSITION OF EXISTING PARTS		CHANGED BY AND DATE	ENGRG APPD	GOVT APPD
											REWORK	SCRAP			
A	1	1.00, 1.10 2.03, 5.00	18B 18C					EO A1	ADDED SH 1.10 ON-1 ADDED MS20470DD5(32), GB511K-08 & NOTES 14, 15, & 16. ADDED DETAIL M & NAS1097AD3(8)	LM-1(31)	NOT	REQD	L. BRIDA 2-27-67		
	2	3.01, 1.00						EOA2	ADDED SH. 3.01. ADDED NOTE 17						
	3	2.00						EOA3	-267DSH-8 WAS-267DSH-6; -136DOD-4 WAS-136DSO-4, -135DFD-4 WAS-135DSF-4						
									REMOVE -333DSH-10 TUBE						
		2.01							-366DSF-4 WAS-366DSH-4						
		2.02													
		2.03							-144DOD-4 WAS-144DSO-4; -149DFD-4 WAS-149DSF-4; -402V-12 WAS-402DSH-12; REMOVED-401DSH-10, -525, -526, -529, -530 -531, -533, -534, -535, -536, -537, -538, -548, -551, -552, -553, -556 -557, -558, -559 ASSY. ADDED: -441DSH-10, GB511J-3-14 (2), GB511J-3-16(2)						
		2.04							REMOVED: -560, -564, -570, -573, -574, -522, -523 & -524 ASSY LSC269-206-24(7), LSC269-206-28(7), LSC269-200-32(8), LSC269-200-10(3), LSC269-224-8(21). ADDED: -567, -586, -587, -588, -589, LSC269-200-4(3), LSC269-200-6(1), LSC269-218-8(1), LSC269-224-4(21), LSC269-200-8(1)						
		2.05							REMOVED: LSC269-362-1, LSC269-362-2, LSC269-363-1, LSC269-363-2, LDW280-16001-7, LDW280-16001-9, LSC270-807-1, LSC270-808-1, AN924-6D (4). ADDED: LSC269-222-4(2), LSC269-252-2(1), AN924-6C(4), LSC269-202-12(1), LDW280P17987-1 & -3 LDW280-51608-13.						
		2.06							REMOVED AN837-6D(4). ADDED: GP11F-10(2), GS13AJ-139(4), AN837-6C(4), MS21042-4(16), AN960C416L(8), AN174C7A(2), AN4C7A(6), GB511J-3-3(4), MS21043-3(4)						
		4.00	5C						LSC269-234-17 TEE WAS LSC269-202-12 ELBOW. ADDED GP11F-10				S.J.		

CHG APPROVED

LTR	GROUP LDR	VEH DES INT	STRUCTURES	STRUCTURES	WEIGHTS
A	JWoy	JWoy	4/4/67		

GRUMMAN AIRCRAFT ENGRG CORP., BETHPAGE, L. I., NEW YORK

SIZE	CODE IDENT NO.		
B	26512	LDW280-51608	A

SCALE NONE   SHEET 1.10

ENG 77.16 3-66

01

NAS 9-1100

REVISIONS FOR CONTINUATION OF REVISIONS SEE SHEET 1.12

CHANGE LTR	ITEM NO.	SHEET NO.	ZONE	GRUMMAN INFO ONLY	DET SPEC	CLASS I	CLASS II	ENGRG ORDER	DESCRIPTION	EFFECTIVITY	DISPOSITION OF EXISTING PARTS		CHANGED BY AND DATE	ENGRG APPD	GOVT APPD
											REWORK	SCRAP			
A	3	4.00 (CONTD) 1.00	3C 4A 5B 5C					EOA3 (CONTD)	ADDED SH. 1.11 REMOVED:-401DSH-10, -333DSH-10 LSC269-200-10. ADDED:-441DSH-10, LDW280P17987-1(2), -3(2), GB511J-3-14(4), GB511J-3-16(4), DRILL CALLOUT, 4 PLACES	LM-1(31)	NOT	REQD	L. BRIDA 2-27-67		
		5.00	15C 14C 15A 13B 14B 13A 16A						REMOVED:-556, -552, -534 -533, -536, -564, -573, -535, -551, -557, -559, -553, -529, -574, -531, -535, -538, -548, -553, & -530 ASSY, LSC269-206-28(7), LSC269-206-24(7) LSC269-341-6, LDW280-16001-7, LDW280-16001-9, LSC269-200-32(2), GS13AJ-132(2), LSC269-218-8(2) LSC269-363-1, LSC269-363-2, ADDED:-587, -586, LSC-269-218-4(2), LSC269-206-16(2), -373V-4, -588, -589 LDW360-21293-1, -567, LDW360-51291-1, DETAIL E						
		6.00	21B 23B 22A 22B 25B						REMOVED:-522, -523, -524, -525, -526, -560, -570 ASSY, -117DSF-4, LSC270-807-1, LSC270-808-1, LSC269-200-32(6), AN960D716L(8). ADDED-582, -583, -585, -590, GB511J-3-3(4), MS21043-3(4), LDW360-21293-1, AN960D916L(8)						
	4	5.00 2.03	15A					EOA4	-1 INSTL FOR INSTL OF LDW280-16026-1 MS20470AD3 WAS MS20470DD3.						
	5	4.00 2.02, 2.05	4A 5B				✓	EOA5	ON-3 ASSY IN F/D & B/M REMOVED LDW280-17388-363V-12 TUBE, (2) LDW280P16218-1 ADDED (1) LDW280-17388-1503 ASSY, (1) LDW280P16218-11, (1) LDW280P16218-13						
	6							EOA6	REF EOA5: IN FLD. & DESCRIPTION -INSTL WAS -3 ASSY						
	7	5.00	15B					EOA7	ON-1: ADDED & RELOCATED CLAMPS.						
	8	2.05, 6.00	22C 23C					EOA8	ON-1 REMOVED LDW270M10003-1. ADDED GP10N-33 & GP10N-99						
	9	2.05 5.00	13B 13A					EOA9	IN B/M & F/D REMOVED VENDOR SUPPLIED SHIPPING PLUG & SEAL FROM INSTRUMENTATION PRESSURE PORT IN +Y & +Z TANK LOWER COVER & REPLACED WITH LSC269-160-4(2), LSC269-112-4(2) & LSC269-113-4(2)				S.J.		

CHG APPROVED

LTR	GROUP LDR	VEH DES INT	STRUCTURES	STRUCTURES	WEIGHTS
A					

GRUMMAN AIRCRAFT ENGRG CORP., BETHPAGE, L. I., NEW YORK

SIZE	CODE IDENT NO.		
B	26512	LDW280-51608	A
SCALE NONE			SHEET 1.11

ENG 77.16 3-66

01

NAS 9-1100

REVISIONS FOR CONTINUATION OF REVISIONS SEE SHEET 1.13

CHANGE LTR	ITEM NO.	SHEET NO.	ZONE	GRUMMAN INFO ONLY	DET SPEC	CLASS I	CLASS II	ENGRG ORDER	DESCRIPTION	EFFECTIVITY	DISPOSITION OF EXISTING PARTS REWORK	DISPOSITION OF EXISTING PARTS SCRAP	CHANGED BY AND DATE	ENGRG APPD	GOVT APPD
A	10	4.00 2.06 1.00	4A 5B					EO A10	ADDED SH.1.12 ON-1 INSTL: REMOVED GC12A-24(2) & ADDED:- MS20470AD3(12) TO BM & FLD OF DWG.	LM-1 (31)	NOT	REQD	L. BRIDA 2-27-67	☒	☒
	11								ADDED CLEANLINESS LEVEL TO B/M FOR NEW PARTS.						
	12	5.00 2.03	15C 16C 17C 18C 16A 16B 17B 18B						REF EO A1: ADDED GB511K-08(43)(WAS GB511K-08) & GN512H-08(43) WAS GB512H-08 IN FLD OF E.O.). ADDED SECTS. F-F, G-G, H-H, J-J, K-K, L-L, N-N, P-P & DETAIL "M". IN SECTS. F-F & G-G "GB511K-08(8), GN512H-08(8), SEE NOTE 16" WAS MS20470DD5(8). 4 PLACES						
	13	2.03 5.00 6.00	17C 15A 22C						REF EO A3: "ADD" LSC269-202-12 S/B "REMOVE". ON-1 INSTL LDW360-51293-3 & -5 WAS LDW360-21293-1(4)				(S.J.)		
	14	3.01					✓		IN GENERAL NOTES ADDED NOTE #18				H. RYAN 3-21-67		
	15	5, 6	14B 21B 23B 21A 22A 25A 25B 26B				✓		ON-1 INSTL IN F/D REVISED PICTURE OF ROUTING OF -147, -211, -271, -272, -392, -398 TO AGREE WITH VEHICLE. REMOVED CALLOUTS FOR GC500J CLAMPS ALSO CALLOUTS FOR BOLTS, WASHERS, AND NUTS 6 PLACES IN GENERAL NOTES REVISED NOTE 5						
	16	5, 6, 2.04 2.05	22C 24B 25B 23A 22B				✓		ON-1 INSTL IN F/D & B/M LSC269-218-8 WAS 220-8 ADDED (1) NAS43DD-32 & (1) NAS43DD3-48 IN F/D REVISED PICTURE OF -264, -394, -367, -397, -368 TO AGREE WITH VEHICLE						
	17	2.03					✓		ON-1 INSTL IN B/M ADDED GB511J, GC12H, AN960D, MS21042L IN QUANTITY COLUMN ADDED "NOTE 5"						
		2.03 5.00 6.00	14B 14C 22B 24B						ON-1 INSTL IN F/D & B/M ADDED LDW360-21251-1 TRANSDUCER INSTALLATION						
		2.03 4.00	6C						ON-1 INSTL IN F/D & B/M ADDED LDW360-21289-1 TRANSDUCER INSTALLATION						

CHG APPROVED

LTR	GROUP LDR	VEH DES INT	STRUCTURES	STRUCTURES	WEIGHTS
A			4/4/67		

GRUMMAN AIRCRAFT ENGRG CORP., BETHPAGE, L. I., NEW YORK

SIZE	CODE IDENT NO.		
B	26512	LDW280 51608	A
SCALE NONE			SHEET 1.12

ENG 77.16 3-66

01 NAS 9-1100

REVISIONS

CHANGE LTR	ITEM NO.	SHEET NO.	ZONE	GRUMMAN INFO ONLY	DET SPEC	CLASS I	CLASS II	ENGRG ORDER	DESCRIPTION	EFFECTIVITY	DISPOSITION OF EXISTING PARTS		CHANGED BY AND DATE	ENGRG APPD	~~GOVT~~ APPD
											REWORK	SCRAP			
A	17	2.03							ON-1 INSTL IN B/M ADDED LDW360-51291-1 TRANSDUCER INSTL	LM-1 (31)	NOT	REQD	HUGH RYAN 4-6-67		
		2.03 4.00	5B						Ⓡ ON-1 INSTL IN F/D & B/M ADDED LDW360-52292-1 TRANSDUCER INSTALLATION.						
B	1	2.03 4.00	- 5B					EO B1	ON-1 INSTL IN F/D & B/M: MS20470A3(12) WAS MS20470AD3(12) (REF EO A10)	LM-1 (31)	NOT	REQD	P.J. MARTELLO 5/11/67		
	2	5.00	14C					EO B2	ON-1 INSTL IN F/D & B/M ADDED: GC12H-4 CLAMP.						
	3	2.03/4.00	6C					EO B3	ON-1 INSTL IN F/D & B/M ADDED: LDW280P16221-17 SPACER						
	4	2.05 4.00 5.00 6.00 6.00 6.00	- 6C 14B 21A 23A 24B					EO B4	ON-1 INSTL IN F/D & B/M ADDED: (2) GC12H-4 CLAMP, GC12H-6 CLAMP GC12H-8 CLAMP, (4) AN960D8L WASHER, (2) MS21042L08 NUT, (2) NAS43DD3-16 SPACER. REVISED ROUTING OF -266DSH-8, -271DSH-6, -211DSH-8, -274DSH-4, -566 ASSY, -385DFD-6, 386DFD-6, -387DFD-6, -388DFD-6. REMOVED NAS43DD3-8 SPACER.						
	5	2.05 5.00 6.00	- 14B 23A					EO B5	ON-1 INSTL IN F/D & B/M ADDED: NAS43DD3-16 SPACER, REMOVED: GC12H-6 CLAMP, GC12H-8 CLAMP, GB511J-08-4 BOLT, AN960D8L(2) WASHER & MS21042L08 NUT (REF EO B4)						
	6	5.00	15A					EO B6	ON-1 INSTL IN F/D & B/M DELETE GC500J-D4T						
	7	2.01 2.02 2.05 2.06 3.00 5.00 6.00 6.00	- - - - - 14A 24B 25B					EO B7	ON-1 INSTL IN F/D & B/M ADDED: NAS43DD3-32(2) SPACER, NAS43DD3-24(3) SPACER, LDW280-17388-482DSF-4, -483DSF-4 TUBE, LSC269-200-4(2) UNION. REMOVED: CALLOUTS FOR GC500J CLAMPS. REVISED NOTE #5, WAS: SELECTION AND INSTALLATION OF LINE CLAMPS & ATTACHING HARDWARE SHALL BE IN ACCORDANCE WITH LPC280-22 EXCEPT AS NOTED.						
	8	3.00	-					EO B8 LEO280-563	ON-1 INSTL: NOTE #4 WAS, TORQUE TANK BOLTS NAS673V3H TO 32-35 IN LBS. LUBRICATE BOLTTHREADS WITH DUPONT PR-240AC BEFORE INSTALLING SAFETY WIRE PER MS33540.						
	9	2.04 3.01 6.00	- 21B 24B					EO B9	ON-1 INSTL IN F/D & B/M ADDED: LSC269-229-4 (4) CAPS & NOTE-19.						
	10	3.00/3.01 5.00	 11A					EO B10 LEO280-581	ON-1 INSTL: ADDED: NOTE 20 & FIGURE 1 ON SHT 5.00, REMOVE NOTE 4.						
	11	2.03/4.00	6C						ON-1 INSTL: IN F/D & B/M DELETE LDW280P16221-17 SPACER						

LTR	GROUP LDR	VEH-DES INT	STRUCTURES	STRUCTURES	WEIGHTS								
A	J. Wolf	J. Wolf	W/W 4/4/67										
B	J. Wolf	J. Wolf 5/11/67	W/W 5/12/67	N 5/15/67									

FOR CONTINUATION OF REVISIONS SEE SHEET ______

GRUMMAN AIRCRAFT ENGRG CORP, BETHPAGE, L. I., NEW YORK

SIZE	CODE IDENT NO.		
B	26512	LDW280-51608	B Ⓑ
SCALE NONE			SHEET 1.13

ENG 77.3 5-66

01

NAS 9-1100

LDW280-51608 D

MODEL OR END ITEM	NEXT ASSY	MODULE OR SER NO.	REQD PER MODULE OR END ITEM
PART NO.		GAEC SCH NO.	

MODEL OR END ITEM	NEXT ASSY	MODULE OR SER NO.	REQD PER MODULE OR END ITEM
PART NO.		GAEC SCH NO.	

LM	LDW280-51508	LM-1(31)	1
MODEL OR END ITEM	NEXT ASSY	MODULE OR SER NO.	REQD PER MODULE OR END ITEM
PART NO. LDW280-51608-1		GAEC SCH NO. 501	

5

SH REV STATUS: FOR DESCRIPTION OF REV SEE SUBQ SH

SHEET	1.00	2.00	2.01	2.02	2.03	2.04	2.05	2.06	2.07
REV	D	D	D	D	D	D	D	D	D
SHEET	3.00	3.01	4.00	500	6.00	1.10	1.11	1.12	1.13
REV	D	D	D	D	D	A	A	A	B
SHEET	7.00	1.14	1.15	1.16	1.17	3.02			
REV	D	D	D	D	D	D			

LAST SECT LTR USED	AD	GRUMMAN REL INFO D	
LAST DASH NO. USED	1-13	PRIM NO. 470	JK(001) MP-16 D-10/11/7

UNLESS OTHERWISE SPECIFIED DIMENSIONS ARE IN INCHES.
TOLERANCE UNLESS SPECIFIED
FRACTIONS - DECIMALS - ANGLES
~ ~ ~

ORIG DWG AUTH

DETAIL SPEC REQUIREMENT	
CLASS II ENGRG CHANGE	
CLASS I ENGRG CHANGE	

CONTRACT NO. NAS 9-1100
LINE ITEM #9
DOCUMENTATION TYPE II

DRAWN BY	A.V. PURVINS 4/8/66		
LAYOUT BY	J. BOHUN		
CHECKED BY			
GR LEADER	J Wolf 9/9/66		
V.D.I.	[illegible]		
STRUCTURES	[illegible] 9/12/66	PROJ ENGR	R M. Carbee 9-15
STRUCTURES	Hildermann 9/12	REL GROUP	Botts 9-21-66
WEIGHTS	[illegible] 9 21		

Ⓡ GRUMMAN AIRCRAFT ENGRG CORP
BETHPAGE, L. I., NEW YORK

LINES INSTALLATION
PROPULSION & PRESSURIZATION SYSTEM
DESCENT STAGE

SIZE B	CODE IDENT NO. 26512	LDW280-51608	D
SCALE NONE		SHEET 1.00 OF 24	

ENG 77.1 12-65

CDR 9-1-66

01 NAS 9-1100

REVISIONS

CHANGE LTR	ITEM NO.	SHEET NO.	ZONE	GRUMMAN INFO ONLY	DET SPEC	CLASS I	CLASS II	ENGRG ORDER	DESCRIPTION	EFFECTIVITY	DISPOSITION OF EXISTING PARTS		CHANGED BY AND DATE	ENGRG APPD	GOVT APPD
											REWORK	SCRAP			
C	1	4.00 2.01	4C				X	EO C1 LCD 1078	(ON -3) INSTL (IN FIELD & B/M) - REMOVED LDW-280-17388-340DSH-4 ADDED LDW-280-17388-638DSH-4	LM-1 (31)		X	J. De VITA / R. MARTELLO 10-9-67		
	2	4.00 2.01	4C				X	EO C2	(ON -3) INSTL (IN FIELD & B/M) - LDW-280-17388-637DSH-4 WAS LDW-280-17388-347DSH-4		X				
	3	6.00 2.05	23B				X	EO C3	(ON -1) INSTL (IN FIELD & B/M): GP10N-44 WAS GP10N-99						
	4	2.01					X	EO C4 LCD 1244	REVISED EO C1 & EO C2 (CALLOUT) ON -1 INSTL WAS ON -3 INSTL		NOT	REQ'D			
	5	2.06					X	EO C5	CHANGED LOCKWIRE CALLOUT FROM MS20995C32 TO MSL0995NC32	NOT REQ'd	NOT	REQ'D			
	6	3.01						EO C6	ADDED NOTE 21	LM-1 (31)	X				
		5.00	12B 13A 13C 16B			X		LCD 1894	ADDED (TO EXISTING CALLOUT) 4 PLACES) (REF ZONES) NAS 673V3H (16 REQ'D) (SEE NOTE 21) WAS NAS 673V3H (16 REQ'D)						
	7	3.01				X		EO C7 LCD 1894	REVISED NOTE 20. IN FIRST SENTENCE "TORQUE TANK BOLTS NAS 673V3H TO 32-35 IN. LBS." WAS 45-48 IN. LBS. IN SECOND SENTENCE OF NOTE 20 (ADD) "DO NOT APPLY ANY LUBRICANT OVER THE BAKED ON DRY FILM LUBRICANT." (WAS) "LUBRICATE ALL THREADS...BEFORE INSTALLING." IN NOTE "B" 10 IN. LBS. WAS 15 IN. LBS. IN NOTE "C" 20 IN. LBS. WAS 30 IN. LBS. IN NOTE "D" 32-35 IN LBS. WAS 45-48 IN. LBS.						
		3.02							ADDED NOTE 22.						
	8	6.00	22B			X		EO C8 LCD 1935 LFM 30	CANCELLED BY EOD 8						
	9	3.01				X		EO C9 LCD 1894	REVISED NOTE 20. IN NOTE "D" OF 20 REMOVED: "FOR FINAL TORQUE SAFETY WIRE PER MS33540 USING MS20995NC32 LOCKIURE." IN NOTE "E" OF 20, ADDED "REPEAT STEP "B" APPLYING 45-48 IN. LBS. FOR FINAL TORQUE. SAFETY WIRE PER MS33540 USING MS20995NC32 LOCKWIRE."						
	10	5.00	11A				X	EO C10	ON -1 INSTL IN FIELD OF DWG LDW-270M10003-1 WAS LDW-280M10003-1.	NOT REQ'D	NOT	REQ'D			

GRUMMAN AIRCRAFT ENGRG CORP, BETHPAGE, L. I., NEW YORK

SIZE	CODE IDENT NO.		
B	26512	LDW280-51608	D
SCALE NONE			SHEET 1.14

FOR CONTINUATION OF REVISIONS SEE SHEET 1.15

ENG 77.3 5-65

01

NAS 9-1100

REVISIONS

CHANGE LTR	ITEM NO.	SHEET NO.	ZONE	GRUMMAN INFO ONLY	DET SPEC	CLASS I	CLASS II	ENGRG ORDER	DESCRIPTION	EFFECTIVITY	DISPOSITION OF EXISTING PARTS		CHANGED BY AND DATE	ENGRG APPD	GOVT APPD
											REWORK	SCRAP			
D	1	2.06 3.02				✓		EOD1 LCD1894	CANCELLED BY EOD11	LM-1(31)	✓		J. DeVITA/P. MARTELLO 10-9-67		
		5.00	14A 15B												
		6.00	22B 23B												
	2	2.00 2.04 2.06				✓		EOD2 LCD1894	ADDED: -3,-5,-7 & -9 ASSY. (ON-1) REMOVED: GS13AJ-133(4), NAS673V3H(32), LDW280-17388-582,-583, -585,-586,-587,-588,-589 & -590		-1	-13			
		3.02							ADDED NOTES - 23, 24, 25, 26, 27, 28, 29, 30, 31 & 32.						
		7.00	32A 33A						ADDED: VIEWS Y-Y & Z-Z & DETAILS V & W. (ON-1) ADDED GSAJ-142(2)						
		5.00	11A 11B 12A						REMOVED: DETAIL E & FIGURE I & LDW280-51608-13(2)						
			13B 15C 14B						ADDED IN FLD: -3,-5,-7 & -9 ASSY						
	3	3.02				✓		EOD3 LCD1894	ADDED NOTES 33 & 34		✓				
		7.00	32A 33A						REVISED PICTURE OF DETAILS V & W						
	4	2.06 2.07				✓		EOD4 LCD1894	(REF EOD2) ON-1 INSTL: REMOVED LDW270P10006-11(4), NAS1271H4(132), GS13AJ-142(2), MS20995C20. ON-3 ASSY: REMOVED GS13AL-224, MS20995C20, AN960C416(64), LDW270M16179-11, LDW280M15566-11(2). ON-5 ASSY: REMOVED LDW270M16179-11, LDW280M15565-11(2), MS20995C20, AN960C416(68). ON-7 & -9 ASSY GS13AK-142-090 WAS GS13AJ-142. (ON-1 INSTL) ADDED GS13AK-142-090(2). (ON-3 INSTL) ADDED LDW270M10066-11(2), 6856183(2), AN106406(8), AN960C10L(8),		-1	-13			
		5.00	14A 14C 13B 15B												
		7.00	29B 31A 31B 33A 34B												

FOR CONTINUATION OF REVISIONS SEE SHEET 1.16

GRUMMAN AIRCRAFT ENGRG CORP, BETHPAGE, L. I., NEW YORK

SIZE	CODE IDENT NO.		
B	26512	LDW280-51608	D
SCALE NONE		SHEET 1.15	

ENG 77.3 5-65

01 NAS 9-1100

REVISIONS

CHANGE LTR	ITEM NO.	SHEET NO.	ZONE	GRUMMAN INFO ONLY	DET SPEC	CLASS I	CLASS II	ENGRG ORDER	DESCRIPTION	EFFECTIVITY	DISPOSITION OF EXISTING PARTS		CHANGED BY AND DATE	ENGRG APPD	GOVT APPD
											REWORK	SCRAP			
D	4 CONTINUE	7.00	31B 31A 28A 30A			✓		EOD4 (CONTINUED)	LDW280M16193-11 (2). (ON-5 INSTL) ADDED LDW270M10065-11(2), 6856183(2), AN106406(8), AN960C10L(8), LDW280M16193-13(2). ADDED DETAILS R, S, T & U, SECTIONS AA-AA, AB-AB, AC-AC & AD-AD, VIEWS Y & Z.	LM-1(31)	-1	-13	J. DeVITA/P. MARTELLO 10-9-67		
	5	2.07 7.00	 29A				✓	EOD5	(ON-5) ASSY IN BM & FLD REMOVED LDW270M10065-11(2) ADDED LDW270M10065-13(2)		✓				
	6	2.06 5.00 6.00	 11B 15B 22B 23B			✓		EO D6 LCD1894	CANCELLED BY EOD11						
	7	2.07				✓		EO D7 LCD1894	(REF-EOD4): LDW280M16177-11(4) ON-5 S/B (4) ON-3 LDW280M16176-11(4) ON-3 S/B (4) ON-5						
		2.07 7.00	 29A 30A						(REF EOD4) ON-3 ASSY (REMOVED) LDW270M16179-11 S/B LDW280M16179-11(2). ON-5 ASSY (REMOVED) LDW270M16179-11 S/B LDW280M16178-11(2). ON-3 INSTL: ADDED---- S/B ON-3 ASSY: ADDED---- ON-5 INSTL: ADDED---- S/B ON-5 ASSY: ADDED----						
		7.00	30A						DETAIL T (+Y TANK) ADDED CALLOUT LDW280M15566-11						
	8	6.00	23B					EOD8 LCD1935, LFM30	CANCELS EOC8						
	9	2.06				✓		EOD9 LCD1894	(REF EOD2 & EOD4) ON-3 (ADDED) GS570-2-224(2) ON-5 (ADDED) GS570-2-226(2).						
		3.02							REVISED NOTE 29 (170-180) INCH LBS WAS 200 INCH LBS.						
		7.00	32A						DETAIL T: GS570M-2-224 WAS GS570-2-226 (2 PLACES)						
	10	2.06						EO D10 LCD1894	(REF EOD4) DELETED NAS673V3H(32)						
		3.02							(REF EOD9) NOTE 26 (AN106406) WAS (AN601406).						

GRUMMAN AIRCRAFT ENGRG CORP, BETHPAGE, L. I., NEW YORK

SIZE	CODE IDENT NO.		
B	26512	LDW280-51608	D
SCALE NONE			SHEET 1.16

FOR CONTINUATION OF REVISIONS SEE SHEET 1.17

ENG 77.3 5-65

01

NAS 9-1100

REVISIONS

CHANGE LTR	ITEM NO.	SHEET NO.	ZONE	GRUMMAN INFO ONLY	DET SPEC	CLASS I	CLASS II	ENGRG ORDER	DESCRIPTION	EFFECTIVITY	DISPOSITION OF EXISTING PARTS REWORK	DISPOSITION OF EXISTING PARTS SCRAP	CHANGED BY AND DATE	ENGRG APPD	APPD
D	10 CONTINUED	2.07				✓		EO D10 (CONTINUED)	(REF EOD7) LDW280M15566-13 WAS LDW280M15566-11	LM-1(31)	✓		J. DeVITA/P. MARTELLO 10-9-67		
		5.00	12B 13A						IN DETAIL T (6844590-12101)(32) WAS (34). IN DETAIL S (6844590-12101)(34) WAS (32).						
		7.00	29A 30A						IN SECTION AA-AA & AB-AB (AN106406) REF WAS (AN601406) REF. TO CALLOUT GS570M-2-224 SEAL (ADDED) "OR GS13AL-224 SEAL". (OXID BALANCE) WAS (FUEL-BALANCE) & (OXID FEED) WAS (FUEL FEED). IN VIEW Y-Y (TO CALLOUT) LDW280M16179-11 NUT (BAL. LINE) LDW 280 M10066-11 NUT (FEED LINE) (ADDED) MS20995C32 LOCKWIRE.						
			29A						IN VIEW Z-Z (TO CALLOUT) LDW280M16178-11 NUT (BAL LINE) LDW270M10065-11 NUT (FEED LINE) (ADDED) MS20995C32 LOCKWIRE						
		3.00 3.01							DELETED NOTES 11, 20 & 21						
	11							EO D11 LCD1894	CANCELLED EOD1 & D6						
	12	2.03						LCD1894	(ON-1) REMOVED: GC12H-10, GC12H-8, GC12H-6, GC12H-4, AN960D10 & AN960D8L.		NOT	REQD			
	13	1.00							SHEET 1.00 OF 24 WAS SHEET 1.00 OF 17. ADDED SHEETS 1.14, 1.15, 1.16, 1.17, 2.07, 3.02 & 7.00. LAST SECTION LETTER USED AD-AD WAS SECTION P-P.						

FOR CONTINUATION OF REVISIONS SEE SHEET 1.18

GRUMMAN AIRCRAFT ENGRG CORP, BETHPAGE, L. I., NEW YORK

SIZE	CODE IDENT NO.		
B	26512	LDW280-51608	D
SCALE NONE			SHEET 1.17

ENG 77.3 5-65

01

NAS 9-1100

								LDW280-17388									
L						1		-322DSH-10	E	TUBE	SEE DWG						
						1		-321DSH-10									
						1		-320V-12									
						1		-319DSH-4									
						1		-318DSH-4									
						1		-295DSH-6									
						1		-275DSH-4									
						1		-274DSH-4									
						1		-272DSH-6									
						1		-271DSH-6									
						1		-270DSH-6									
						1		-268DSH-8									
						1		-267DSH-8									
						1		-266DSH-8									
						1		-265DSH-8									
						1		-264DSH-8									
						1		-263DSH-8									
						1		-211DSH-8									
						1		-210DSH-8									
						1		-168DSH-12									
						1		-167DSH-4									
						1		-166DSH-12									
L						1		-165DSH-10		TUBE	SEE DWG						
								LDW280-17388									
J						4		LDW280-51608-11		TUBE	SEE NOTE 12						
						1		-9		LINES ASSY							
						1		-7									
						1		-5									
J						1		-3		LINES ASSY							
								LDW280-51608-1	E	LINES INSTL							
CL		-9	-7	-5	-3	-1	CODE IDENT	PART NO.	I&T	NOMENCLATURE OR DESCRIPTION	MATERIAL	GOVT SPEC	COML SPEC	STOCK SIZE	PROCESS SYM	FINISH NO.	ZONE
	QTY PER ASSEMBLY																

CL = CLEANLINESS LEVEL

SYM OR NO.	PROCESS OR FINISH	GRUMMAN SPEC OR MILITARY SPEC	SYM OR NO.	PROCESS OR FINISH	GRUMMAN SPEC OR MILITARY SPEC	SYM OR NO.	PROCESS OR FINISH	GRUMMAN SPEC OR MILITARY SPEC

I & T: IDENTIFICATION AND TRACEABILITY IN ACCORDANCE WITH : NONE

GRUMMAN AIRCRAFT ENGRG CORP, BETHPAGE, L. I., NEW YORK

SIZE B
CODE IDENT NO. 26512
LDW280-51608
D
SCALE NONE
SHEET 2.00

ENG 77.2 7-65

01

NAS 9-1100

CL		-9	-7	-5	-3	-1	CODE IDENT	PART NO.	I&T	NOMENCLATURE OR DESCRIPTION	MATERIAL	GOVT SPEC	COML SPEC	STOCK SIZE	PROCESS SYM	FINISH NO.	ZONE
								LDW280-17388									
L						1		↑ -356DSH-4	E	TUBE	SEE DWG						
↑						1		-355DSH-4	↑	↑	↑						
						1		-354DSH-4									
						1		-353DSH-4									
						1		-351 V-6									
						1		-350DSH-10									
						1		-349DSH-4									
						1		-348DSH-10									
						1		-637DSH-4									
						1		-346 V-6									
						1		-345DSH-10									
						1		-341DSH-4									
						1		-638DSH-4									
						1		-336DSH-10									
↓						1		-335DSH-10									
L						1		-334DSH-10									
J						1		-482DSF-4									
L						1		-332DSH-10									
↑						1		-331DSH-10									
						1		-330DSH-10									
						1		-329DSH-10									
						1		-328DSH-10									
						1		-327DSH-10									
						1		-326DSH-10									
						1		-325DSH-4									
						1		-324DSH-4									
↓						1		-323DSH-10									
L						1		-322DSH-10	↓	↓	↓						
J						1		↓ -135DFD-4	E	TUBE	SEE DWG						
								LDW280-17388									
	QTY PER ASSEMBLY																

SYM OR NO.	PROCESS OR FINISH	GRUMMAN SPEC OR MILITARY SPEC	SYM OR NO.	PROCESS OR FINISH	GRUMMAN SPEC OR MILITARY SPEC	SYM OR NO.	PROCESS OR FINISH	GRUMMAN SPEC OR MILITARY SPEC

I & T: IDENTIFICATION AND TRACEABILITY IN ACCORDANCE WITH : NONE

GRUMMAN AIRCRAFT ENGRG CORP, BETHPAGE, L. I., NEW YORK

SIZE	CODE IDENT NO.		
B	26512	LDW280-51608	D
SCALE NONE			SHEET 2.01

ENG 77.2 7-65

01

NAS 9-1100

CL		-9	-7	-5	-3	-1	CODE IDENT	PART NO.	I&T	NOMENCLATURE OR DESCRIPTION	MATERIAL	GOVT SPEC	COML SPEC	STOCK SIZE	PROCESS SYM	FINISH NO.	ZONE
								LDW 280-17388									
J						1		-136DOD-4	E	TUBE	SEE DWG						
L						1		-394DSH-8									
J						1		-393DSF-4									
						1		-392DSF-4									
						1		-391DSO-4									
						1		-390DSO-4									
						1		-389DSO-4									
						1		-388DFD-6									
						1		-387DFD-6									
						1		-386DFD-6									
						1		-385DFD-6									
						1		-384DFD-6									
						1		-383DFD-6									
						1		-382DFD-6									
J						1		-381DFD-6									
L						1		-377DSH-10									
						1		-376DSH-10									
						1		-375DSH-10									
						1		-374DSH-10									
L						1		-373V-4									
J						1		-368DSO-4									
J						1		-367DSF-4									
L						1		-366DSF-4									
J						1		-483DSF-4									
L						1		-362V-12									
						1		-361DSH-10									
						1		-358DSH-4									
L						1		-357DSH-4									
J						1		-147DSF-4	E	TUBE	SEE DWG						
								LDW280-17388									

QTY PER ASSEMBLY

SYM OR NO.	PROCESS OR FINISH	GRUMMAN SPEC OR MILITARY SPEC	SYM OR NO.	PROCESS OR FINISH	GRUMMAN SPEC OR MILITARY SPEC	SYM OR NO.	PROCESS OR FINISH	GRUMMAN SPEC OR MILITARY SPEC

I & T: IDENTIFICATION AND TRACEABILITY IN ACCORDANCE WITH : NONE

GRUMMAN AIRCRAFT ENGRG CORP, BETHPAGE, L. I., NEW YORK

SIZE	CODE IDENT NO.		
B	26512	LDW280-51608	D

SCALE NONE

SHEET 2.02

ENG 77.2 7-65

01

NAS 9-1100

CL		QTY PER ASSEMBLY -9	-7	-5	-3	-1	CODE IDENT	PART NO.	I&T	NOMENCLATURE OR DESCRIPTION	MATERIAL	GOVT SPEC	COML SPEC	STOCK SIZE	PROCESS SYM	FINISH NO.	ZONE
A						8		NAS1097-AD3	E	RIVET	STD PART						
A						12		MS210470A3	E	RIVET	STD PART						
A						AR		MS20470AD3	E	RIVET	STD PART						
A						43		GB511K-08	↑	BOLT	GRUMMAN STD						
↑						4		GB511J-3-16		BOLT	↑						
↓						4		GB511J-3-14		BOLT	↓						
A						43		GN512-08		NUT	GRUMMAN STD						
A						NOTE 5		GB511J		BOLT	GRUMMAN STD						
↑						↑		GC12H		CLAMP	GRUMMAN STD						
↓						↓		MS21042L		NUT	STD PART						
A						NOTE 5		AN960D		WASHER	STD PART						
J						1		LDW360-21251-1		TRANSDUCER INSTL	SEE DWG						
L						1		LDW360-21289-1		↑	↑						
J						1		LDW360-51291-1									
L						1		LDW360-51292-1									
L						1		LDW360-51293-3		↓							
L						1		LDW360-51293-5		TRANSDUCER INSTL.							
								LDW280-17388									
L						1		-403V-12		TUBE							
↑						1		-402V-12		↑							
↓						1		-441DSH-10									
L						1		-400DSH-10									
J						1		-398DSF-4									
↑						1		-397DS0-4									
						1		-149DFD-4									
						1		-146DSF-4									
↓						1		-145D0D-4	↓	↓	↓						
J						1		-144D0D-4	E	TUBE	SEE DWG						
								LDW280-17388									

SYM OR NO.	PROCESS OR FINISH	GRUMMAN SPEC OR MILITARY SPEC	SYM OR NO.	PROCESS OR FINISH	GRUMMAN SPEC OR MILITARY SPEC	SYM OR NO.	PROCESS OR FINISH	GRUMMAN SPEC OR MILITARY SPEC

I & T: IDENTIFICATION AND TRACEABILITY IN ACCORDANCE WITH : NONE

GRUMMAN AIRCRAFT ENGRG CORP, BETHPAGE, L. I., NEW YORK

SIZE B

CODE IDENT NO. 26512

LDW280-51608 D

SCALE NONE

SHEET 2.03

ENG 77.2 7-65

01

NAS 9-1100

CL		-9	-7	-5	-3	-1	CODE IDENT	PART NO.	I&T	NOMENCLATURE OR DESCRIPTION	MATERIAL	GOVT SPEC	COML SPEC	STOCK SIZE	PROCESS SYM	FINISH NO.	ZONE
		QTY PER ASSEMBLY															
L						4		LSC269-205-10	E	CAP	SEE NOTE 6						
↑						3		↑ -226-4	↑	ELBOW	↑						
						1		-221-6		↑							
						1		-220-8									
						1		-203-12									
						8		-203-10									
						4		-202-10		↓							
						2		-202-4		ELBOW							
						2		-231-7		CROSS							
						2		-201-10		CROSS							
						21		-224-4		UNION							
						6		-218-8		↑							
						4		-218-6		↓							
						8		-218-4		UNION							
						4		-229-4		CAP							
↓						1		↓ -200-8		UNION	↓						
L						1		LSC269 -200-6		UNION	SEE NOTE 6						
								LDW280-17388									
J		1						↑ -1519		WELDED ASSY	SEE DWG						
↑			1					-1518		↑	↑						
			1					-590									
					1			-589									
					1			-588									
				1				-587									
↓				1				-586									
J		1						-585									
L						1		-567		↓							
L						1		-566		WELDED ASSY							
J						2		-155DSF-4	↓	TUBE	↓						
J						2		↓ -138DSO-4	E	TUBE	SEE DWG						
								LDW280-17388									

SYM OR NO.	PROCESS OR FINISH	GRUMMAN SPEC OR MILITARY SPEC	SYM OR NO.	PROCESS OR FINISH	GRUMMAN SPEC OR MILITARY SPEC	SYM OR NO.	PROCESS OR FINISH	GRUMMAN SPEC OR MILITARY SPEC

I & T: IDENTIFICATION AND TRACEABILITY IN ACCORDANCE WITH : NONE

GRUMMAN AIRCRAFT ENGRG CORP, BETHPAGE, L. I., NEW YORK

SIZE	CODE IDENT NO.		
B	26512	LDW280-51608	D

SCALE NONE

SHEET 2.04

ENG 77.2 7-65

01 ✓

NAS 9-1100

CL		-9	-7	-5	-3	-1	CODE IDENT	PART NO.	I&T	NOMENCLATURE OR DESCRIPTION	MATERIAL	GOVT SPEC	COML SPEC	STOCK SIZE	PROCESS SYM	FINISH NO.	ZONE
A						4		AN924-6C	E	NUT	STD PART						
A						4		AN924-4C		NUT	STD PART						
L						2		LSC269-160-4		PLUG	SEE NOTE 6						
L						2		LSC269-112-4		COUPLING NUT	SEE NOTE 6						
J						4		LSC269-113-4		SEAL	SEE NOTE 6						
J						4		LSC269-118-6		SEAL	SEE NOTE 6						
L						1		LDW280-16026-1		VENT RELIEF	SEE DWG						
A						3		NAS43DD3-16		SPACER	STD PART						
A						1		NAS43DD3-48		SPACER	STD PART						
A						2		NAS43DD3-32		SPACER	STD PART						
L						1		LDW280P16218-13		PORT	SEE DWG						
L						1		LDW280P16218-11		PORT							
A						2		LDW280P17987-3		FAIRLEAD							
A						2		LDW280P17987-1		FAIRLEAD	SEE DWG						
L						3		LSC269-200-10		UNION	SEE NOTE 6						
L						9		-200-4		UNION							
L						6		-200-12		UNION							
J						1		-248-1		UNION REDUCER							
						4		-228-4		TEE							
						1		-252-3									
						2		-252-2									
						2		-234-25									
						3		-234-24									
						1		-234-17									
						1		-234-15									
						2		-234-13									
						1		-234-2									
						3		-222-8									
						1		-222-6									
						4		-222-4									
J						4		LSC269-204-10	E	TEE	SEE NOTE 6						

QTY PER ASSEMBLY

SYM OR NO.	PROCESS OR FINISH	GRUMMAN SPEC OR MILITARY SPEC	SYM OR NO.	PROCESS OR FINISH	GRUMMAN SPEC OR MILITARY SPEC	SYM OR NO.	PROCESS OR FINISH	GRUMMAN SPEC OR MILITARY SPEC

I & T: IDENTIFICATION AND TRACEABILITY IN ACCORDANCE WITH : NONE

GRUMMAN AIRCRAFT ENGRG CORP, BETHPAGE, L. I., NEW YORK

SIZE	CODE IDENT NO.		
B	26512	LDW280-51608	D
SCALE NONE		SHEET 2.05	

ENG 77.2 7-65

01

NAS 9-1100

CL		-9	-7	-5	-3	-1	CODE IDENT	PART NO.	I&T	NOMENCLATURE OR DESCRIPTION	MATERIAL	GOVT SPEC	COML SPEC	STOCK SIZE	PROCESS SYM	FINISH NO.	ZONE
						QTY PER ASSEMBLY											
A						AS REQD		MS20995NC32	E	LOCKWIRE	STD PART						
J				AS REQD	AS REQD			MS20995C32	↑	LOCKWIRE	STD PART						
A						132	73342	6844590-12101		BOLT	COMM. PART	(SEE NOTE 30)					
J					2			6856186		BAFFEL ASSY	↑						
J				2				6856185		BAFFEL ASSY	↓						
J						4	73342	6849962		RACO SEAL	COMM. PART	(SEE NOTE 30)					
A						4		GC12A-12		CLAMP	GRUMMAN STD						
L						3		GP11F-10		PLUG	GRUMMAN STD						
A						4		GB511J-3-3		BOLT	GRUMMAN STD						
↑						4		MS21043-3		NUT	STD PART						
				8	8			AN106406		BOLT	STD PART						
				32	32			NAS1003-4H		BOLT	↑						
						8		AN960D916L		WASHER							
				8	8			MS171522		PIN							
						3		NAS43DD3-24		SPACER							
						4		AN837-6C		ELBOW							
						4		AN837-4C		ELBOW							
↓								AN960D10		WASHER							
A						8		AN960D716L		WASHER							
J				8	8			AN960C10L		WASHER	↓						
J				16	16			AN501AD10-5		SCREW	STD PART						
J					2			GS570M-2-224		SEAL	GRUMMAN STD						
J				2				GS570M-2-226	↓	SEAL	GRUMMAN STD						
J		1	1			2		GS13AK-142-090	E	SEAL	GRUMMAN STD						

SYM OR NO.	PROCESS OR FINISH	GRUMMAN SPEC OR MILITARY SPEC	SYM OR NO.	PROCESS OR FINISH	GRUMMAN SPEC OR MILITARY SPEC	SYM OR NO.	PROCESS OR FINISH	GRUMMAN SPEC OR MILITARY SPEC

I & T: IDENTIFICATION AND TRACEABILITY IN ACCORDANCE WITH : NONE

GRUMMAN AIRCRAFT ENGRG CORP, BETHPAGE, L. I., NEW YORK

SIZE B
CODE IDENT NO. 26512
LDW280-51608
D
SCALE NONE
SHEET 2.06

ENG 77.2 7-65

01

NAS 9-1100

CL		QTY PER ASSEMBLY -9	-7	-5	-3	-1	CODE IDENT	PART NO.	I&T	NOMENCLATURE OR DESCRIPTION	MATERIAL	GOVT SPEC	COML SPEC	STOCK SIZE	PROCESS SYM	FINISH NO.	ZONE
A				1				LDW280-23622-5	E	SUPPORT INSTL	SEE DWG						
A				1				LDW280-23621-5									
A					1			LDW280-23620-7									
A					1			LDW280-23619-5		SUPPORT INSTL							
J					4			LDW280M16193-13		GASKET							
J				4				LDW280M16193-11		GASKET							
J		1						LDW280M16191-15		ORIFICE PLATE							
J			1					LDW280M16191-13		ORIFICE PLATE							
J					2			LDW280M16179-11		NUT							
J				2				LDW280M16178-11		NUT							
J				4				LDW280M16177-11		WASHER							
J					4			LDW280M16176-11		WASHER							
J					1			LDW280M15566-14		COVER (FUEL)							
J					1			LDW280M15566-13		COVER (FUEL)							
J				1				LDW280M15565-14		COVER (OXID)							
J				1				LDW280M15565-13		COVER (OXID)							
J					2			LDW270M10066-11		NUT							
J				2				LDW270M10065-13		NUT							
J						4		LDW270P10007-11	E	BUTYL SEAL	SEE DWG						

SYM OR NO.	PROCESS OR FINISH	GRUMMAN SPEC OR MILITARY SPEC	SYM OR NO.	PROCESS OR FINISH	GRUMMAN SPEC OR MILITARY SPEC	SYM OR NO.	PROCESS OR FINISH	GRUMMAN SPEC OR MILITARY SPEC

I & T: IDENTIFICATION AND TRACEABILITY IN ACCORDANCE WITH : NONE

GRUMMAN AIRCRAFT ENGRG CORP, BETHPAGE, L. I., NEW YORK

SIZE	CODE IDENT NO.		
B	26512	LDW280-51608	D
SCALE NONE		SHEET 2.07	

ENG 77.2 7-65

01

NAS 9-1100

NOTES:

1. SUBSTITUTION OF NAS1132V AND NAS1133V SCREWS FOR GB511J-08 AND GB511J-3 BOLTS IS PERMISSIBLE.

2. TUBE NUMBERS ARE DASH NUMBERS OF DWG LDW280-17388

3. ENGINE OVERBOARD DRAIN LINES SHALL BE INSTALLED WITH A DOWNWARD PITCH AND SHALL BE FREE OF ENTRAPMENTS.

~~4. TORQUE TANK BOLTS NAS673V3H TO 45-48 INCH POUNDS. LUBRICATE BOLT THREADS WITH DUPONT PR-240AC BEFORE INSTALLING. SAFETY WIRE PER MS33540.~~

5. SELECTION AND INSTALLATION OF LINE CLAMPS TO BE IN ACCORDANCE WITH LPC280-22 EXCEPT AS NOTED.

6. COMMERCIAL PARTS, SEE SPECIFICATION CONTROL DRAWING BEFORE ORDERING.

7. BONDING SHALL BE IN ACCORDANCE WITH LSP-390-001.

8. ADD DUPONT PR240AC LUBRICANT ON ALL THREADED FITTINGS.

9. GAMAH CONNECTIONS PER LSP14-17402.

10. BRAZED CONNECTIONS PER LSP14-6303.

~~11. PROCEDURE FOR INSTALLING ORIFICE PLATES IN DESCENT STAGE PROPELLANT LINES.~~
~~a. LOOSEN SUPPORT CLAMP BETWEEN ORIFICE AND ENGINE~~
~~b. REMOVE THE FOUR 1/4" RETAINING BOLTS SECURING THE ORIFICE PLATE AND TWO ORIFICE FLANGES (THREE (3) AN4C7A BOLTS AND ONE (1) AN174C7A BOLT)~~
~~c. ALTERNATELY ROTATE THE THREE (3) SPREADER BOLTS (AN4DD6A) UNTIL THE TWO ORIFICE FLANGES ARE SEPARATED APPROX 1/8"~~
~~NOTE: IF IT IS DEEMED NECESSARY TO REPLACE THE TWO TEFLON "O" RING SEALS IN THE ORIFICE FLANGES, INCREASE THE FLANGE SEPARATION TO PERMIT SEAL REMOVAL AND REPLACEMENT.~~
~~d. GRASP THE ORIFICE PLATE TAB AND LIFT UP APPROX 1/16" TO FREE THE PLATE FROM THE INDEX PIN INSTALLED IN LDW270M10008-1 FLANGE ASSY AND REMOVE ORIFICE PLATE.~~
~~e. INSTALL NEW ORIFICE PLATE BY REVERSING PROCEDURE ABOVE. AFTER ALINING ORIFICE PLATE WITH INDEXING PIN INSTALL THE CLOSE TOLERANCE AN174C7A BOLT BEFORE INSTALLING THE THREE (3) AN4C7A RETAINING BOLTS. TORQUE ALL FOUR (4) RETAINING BOLTS TO 70-80 INCH POUNDS.~~

12. AFTER "COLD FLOW" CUT BACK LDW280-17388-374 DSH-10 THRU-377 DSH-10 TO CREATE LDW280-51608-11 (4) BRAZE LSC269-205-10 CAP TO LDW280-51608-11, 4 PLACES.

13. FINAL INSTALLATION OF PROPELLENT SYSTEM SHALL BE MAINTAINED AT LEVEL "J" AND PRESSURIZATION AT LEVEL "L" OF LSP-14-0011

GRUMMAN AIRCRAFT ENGRG CORP., BETHPAGE, L. I., NEW YORK			
SIZE B	CODE IDENT NO. 26512	LDW280-51608	D ⑬
SCALE		SHEET 3.00	

ENG 73.1 6-64

01

NAS 9-1100

NOTES CONTINUED:

14. SHIM AS REQD USING 2024-T3 AL ALLOY SH, QQ-A-250/4, FIN 88. SHIM TO MATCH CONTOUR WITHIN ±1/16 OF LDW280-17388 PLATES.

15. GB511K-08 GRIP LENGTHS SHALL BE DETERMINED AS REQD ON INSTL.

16. INSTALL GB511K PER LSP 14-15306.

17. CONDUCT A 50PSIG GASEOUS LEAK CHECK TO VERIFY INTEGRITY OF PROPULSION SYSTEM AS FOLLOWS:
    a) INSTALL A 0-100 PSI GAGE & SHUT-OFF VALVE UPSTREAM OF THE LSC270-805-1 OXIDIZER FILL VENT DISCONNECT COUPLING & CONNECT TO A HELIUM SUPPLY SOURCE.
    b) OPEN SUPPLY VALVE UNTIL PRESSURE IN OXIDIZER SIDE OF SYSTEM READS 50 PSI, CLOSE SHUT-OFF VALVE & MONITOR GAGE TO ASSURE THERE IS NO PRESSURE DELAY FOR A PERIOD OF 30 MINUTES.
    c) AFTER SUCCESSFUL COMPLETION OF THE PRESSURE DELAY TEST ON SYSTEM OXIDIZER SIDE, CONNECT GAGE AND SHUT-OFF VALVE UPSTREAM OF THE LSC270-804-1 FUEL FILL VENT DISCONNECT COUPLING AND REPEAT STEPS a) & b) ABOVE ON THE PROPULSION SYSTEM FUEL SIDE.

18. PROPELLENT BELLOWS ARE TO BE INSPECTED PER LEI 280-009.

19. AFTER COLD FLOW I, CUT OFF AN FITTING AND INSTALL LSC269-229-4 CAP.

~~20. TORQUE TANK BOLTS NAS673V3H TO 32-35 IN LBS. DO NOT APPLY ANY LUBRICANT OVER THE BAKED ON DRY FILM LUBRICANT. INSTALL BOLTS FINGER TIGHT & TORQUE IN SEQUENCE AS FOLLOWS:~~
    ~~a) PHYSICAL LOCATION FOR START OF SEQUENCE (BOLT #1) IS OPTIONAL.~~
    ~~b) TORQUE ALL BOLTS PER SEQUENCE TO 10 IN LBS & REPEAT SEQUENCE UNTIL BOLTS DO NOT TURN WHEN 15 IN LBS IS APPLIED.~~
    ~~c) REPEAT STEP b APPLYING 20 IN LBS.~~
    ~~d) REPEAT STEP b APPLYING 32-35 IN LBS~~
    ~~e) REPEAT STEP b APPLYING 45-48 IN LBS FOR FINAL TORQUE. SAFETY WIRE PER MS33540 USING MS20995NC32 LOCKWIRE~~

21. NAS673V3H BOLT IS TO BE DRY LUBED IN ACCORDANCE WITH LPC 280-40.

GRUMMAN AIRCRAFT ENGRG CORP., BETHPAGE, L. I., NEW YORK			
SIZE B	CODE IDENT NO. 26512	LDW280-51608	D
SCALE		SHEET 3.01	

ENG 73.1 6-64

01 NAS 9-1100

NOTES CONTINUED:

22. AFTER INITIAL INSTALLATION, EACH BOLT PATTERN MUST BE RETORQUED IN THE TIGHTENING DIRECTION AND IN SEQUENCE TO PRINT VALUES AT 72 HOUR INTERVALS. REPEAT TWICE, i.e., THE INITIAL INSTL PLUS TWO RETORQUES.
23. TIGHTEN NUT TO A TORQUE VALUE OF 225-250 FOOT LBS. (REF LDW280M16178 & LDW280M16179)
24. TORQUE COUPLING NUTS PER LSP14-17402.
25. LOCKWIRE PER MS33540.
26. ON LDW270M10066-11, LDW280M16179-11, LDW270M10065-11, LDW280M16178-11 AND AN106406 BOLTS ON -3 ASSY LUBRICATE ALL THREADS, BODY & FAYING SURFACES BEFORE INSTALLING WITH DU PONT PR-240AC PER LSM14-6004.
27. TORQUE NAS1003-4H BOLTS TO 45-48 INCH LBS INSTALL BOLTS FINGER TIGHT & TORQUE IN SEQUENCE AS FOLLOWS:
    a. PHYSICAL LOCATION FOR START OF SEQUENCE (BOLT NO. 1) IS OPTIONAL.
    b. TORQUE ALL BOLTS PER SEQUENCE TO 15 INCH LB AND REPEAT SEQUENCE UNTIL BOLTS DO NOT TURN WHEN 15 INCH POUNDS IS APPLIED.
    c. REPEAT STEP (b.) APPLYING 30 INCH POUNDS.
    d. REPEAT STEP (b.) APPLYING 45-48 INCH LBS FOR FINAL TORQUE.
28. TORQUE TO 70-75 INCH POUNDS. INSTALL BOLTS AS PER PARAGRAPHS (a), (b) AND (c) OF NOTE 27 ABOVE, THEN REPEAT STEP (b) APPLYING 70-75 INCH POUNDS FOR FINAL TORQUE.
29. STARTING AT ANY POINT, NUMBER THE BOLT POSITIONS CONSECUTIVELY FROM 1 THRU 40. TIGHTEN ALL BOLTS FINGER TIGHT. TIGHTEN 16 BOLTS 1/8 TURN PER BOLT IN THE SEQUENCE 1, 21, 11, 31, 6, 26, 16, 36, 9, 29, 19, 39, 4, 24, 14, 34 FROM FINGER-TIGHT POSITION. REPEAT SEQUENCE UNTIL 70 INCH POUND TORQUE IS ATTAINED & IS RETAINED ON ALL 16 BOLTS. TIGHTEN ALL REMAINING BOLTS FINGER TIGHT. TORQUE ALL BOLTS TO 170 INCH-LB IN THE SEQUENCE: 1, 21, 11, 31, 6, 26, 16, 36, 9, 29, 19, 39, 4, 24, 14, 34, 7, 27, 17, 37, 2, 22, 12, 32, 8, 28, 18, 38, 3, 23, 13, 33, 10, 30, 20, 40, 5, 25, 15, AND 35. REPEAT IN SAME SEQUENCE UNTIL TORQUE OF 180 INCH POUNDS IS MAINTAINED.
30. 6844590-12101 (BOLT), 6849962 (SEAL) - IS PART OF LSC280-4-51, -53, -55 & -57.
31. TORQUE AN501AD10 TO 20-23 INCH LBS.
32. WELD PER MIL-W-8611
33. INSTALL ORIFICE PLATE LDW28M16191 WITH ELECTRO ETCHED PART NO (FACING TOWARD ENGINE). STAKE IN PLACE PER G469.
34. ON INSTALLATION RECORD "A" & "B" AFTER INSTALLATION & BEFORE WELDING RECORD DIM "C" TOLERANCE ON DIM "C" IS TO BE "A"+"B"+.005 MAX.

GRUMMAN AIRCRAFT ENGRG CORP., BETHPAGE, L. I., NEW YORK			
SIZE B	CODE IDENT NO. 26512	LDW280-51608	D
SCALE		SHEET 3.02	

ENG 73.1 6-64

01 NAS 9-1100

01/021 NAS 9-1100

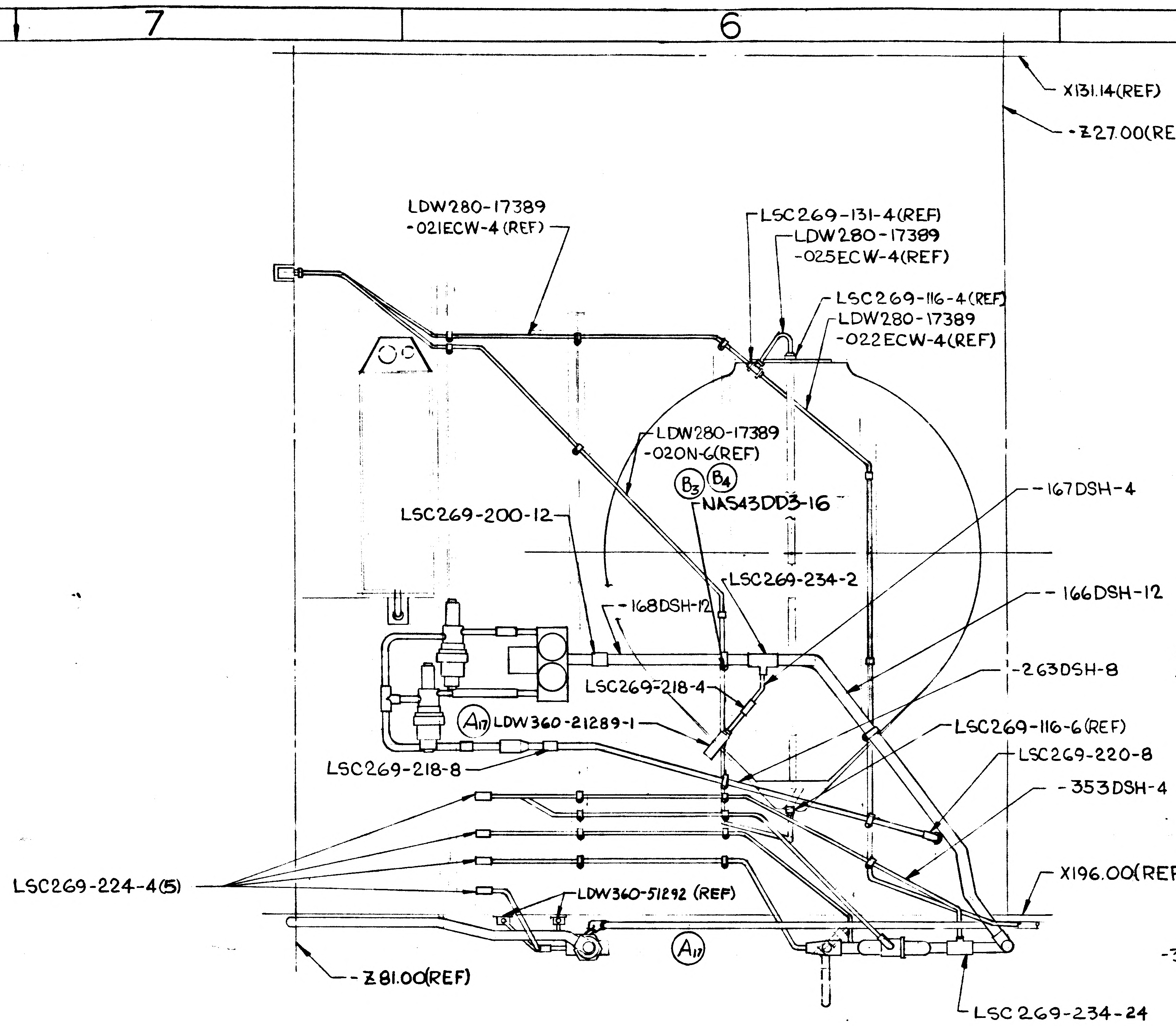
X131.14(REF)
-Z27.00(REF)
LDW280-17389
-021ECW-4 (REF)
LSC269-131-4(REF)
LDW280-17389
-025ECW-4(REF)
LSC269-116-4(REF)
LDW280-17389
-022ECW-4(REF)
LDW280-17389
-020N-6(REF)
B3
B4
NAS43DD3-16
LSC269-200-12
-167DSH-4
LSC269-234-2
-166DSH-12
-168DSH-12
-263DSH-8
LSC269-218-4
A11
LDW360-21289-1
LSC269-116-6(REF)
LSC269-220-8
LSC269-218-8
-353DSH-4
LSC269-224-4(5)
LDW360-51292 (REF)
X196.00(REF)
A11
-Z81.00(REF)
LSC269-234-24

VIEW C-C

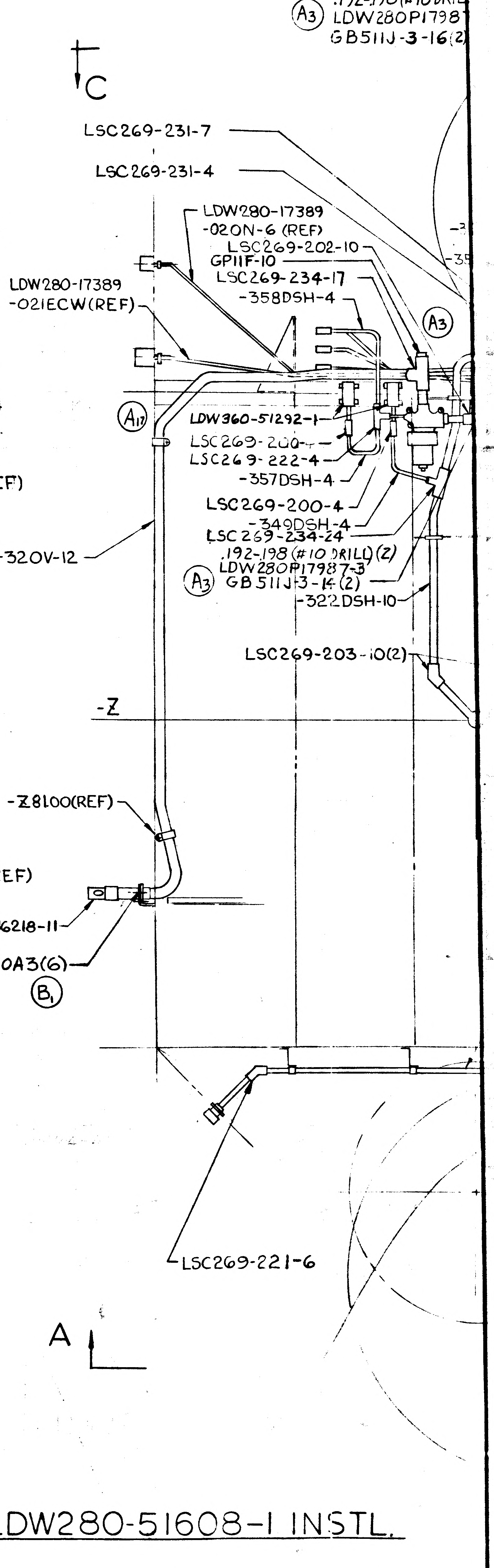
A3
.192-.198(#10 DRILL
LDW280P1798
GB511J-3-16(2
C
LSC269-231-7
LSC269-231-4
LDW280-17389
-020N-6 (REF)
LSC269-202-10
GP11F-10
LSC269-234-17
-358DSH-4
LDW280-17389
-021ECW(REF)
A3
A11
LDW360-51292-1
LSC269-200-
LSC269-222-4
-357DSH-4
LSC269-200-4
-349DSH-4
LSC269-234-24
.192-.198 (#10 DRILL)(2)
LDW280P17987-3
A3
GB511J-3-14 (2)
-322DSH-10
-320V-12
LSC269-203-10(2)
-Z
-Z81.00(REF)
B1
LSC269-221-6
A

LDW280-51608-1 INSTL.

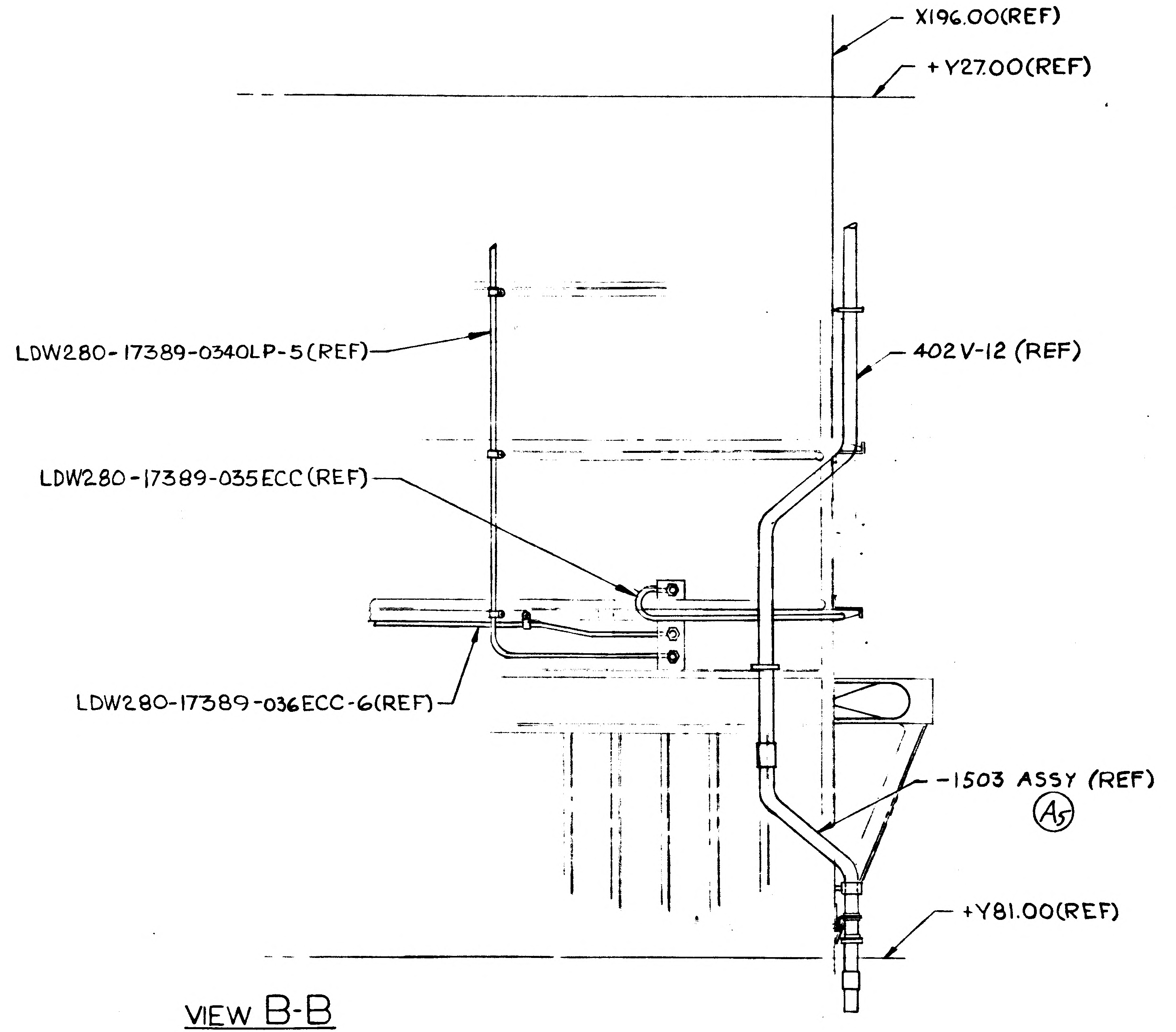
X196.00(REF)
+Y27.00(REF)
LDW280-17389-034OLP-5(REF)
402V-12 (REF)
LDW280-17389-035ECC(REF)
LDW280-17389-036ECC-6(REF)
-1503 ASSY (REF)
A5
+Y81.00(REF)

VIEW B-B

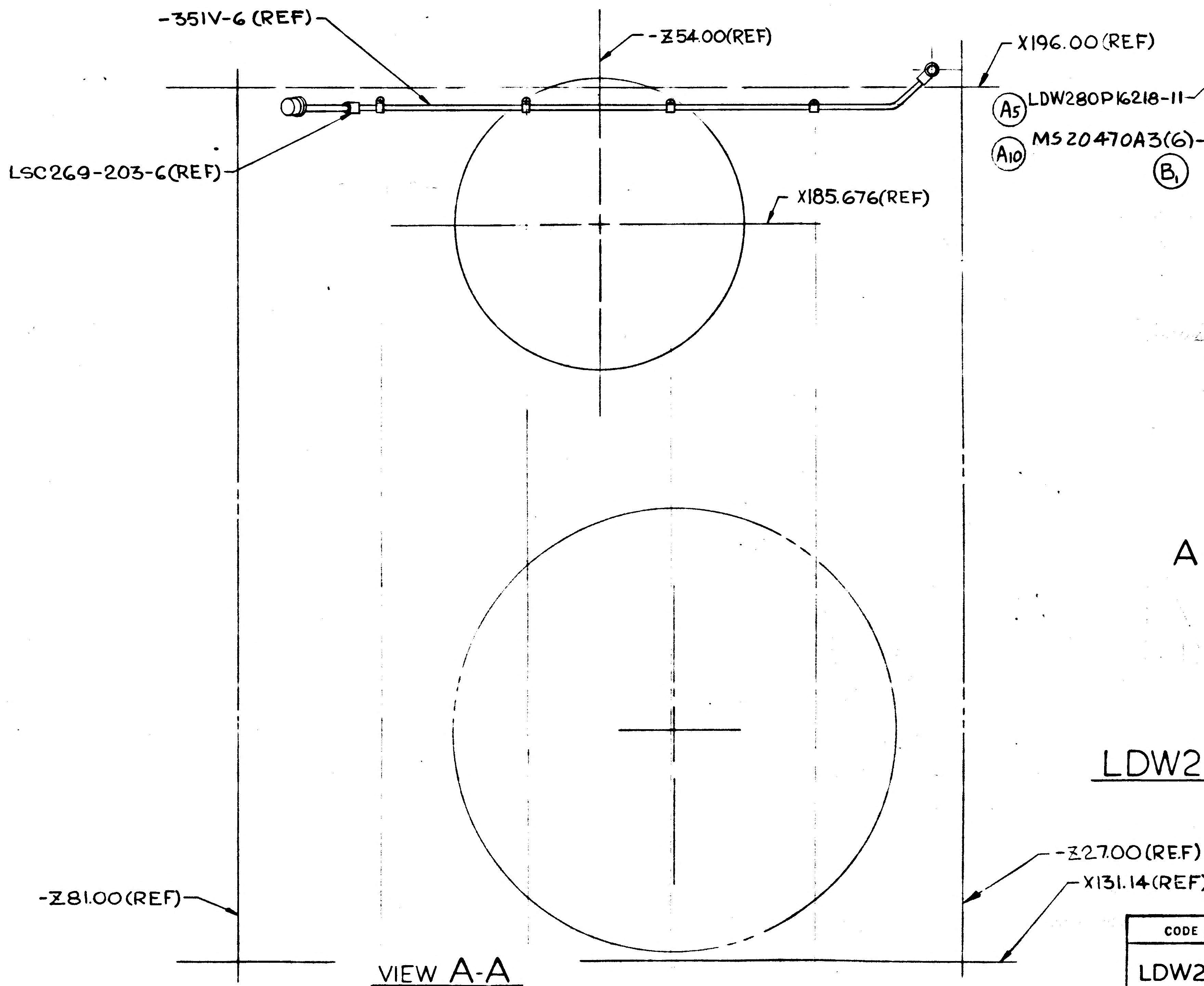
-351V-6 (REF)
-Z54.00(REF)
X196.00 (REF)
A5
LDW280P16218-11
A10
MS20470A3(6)
LSC269-203-6(REF)
X185.676(REF)
-Z27.00(REF)
X131.14(REF)
-Z81.00(REF)

VIEW A-A

2/2

CODE IDENT NO. 26512

LDW280-51608

SHEET 4

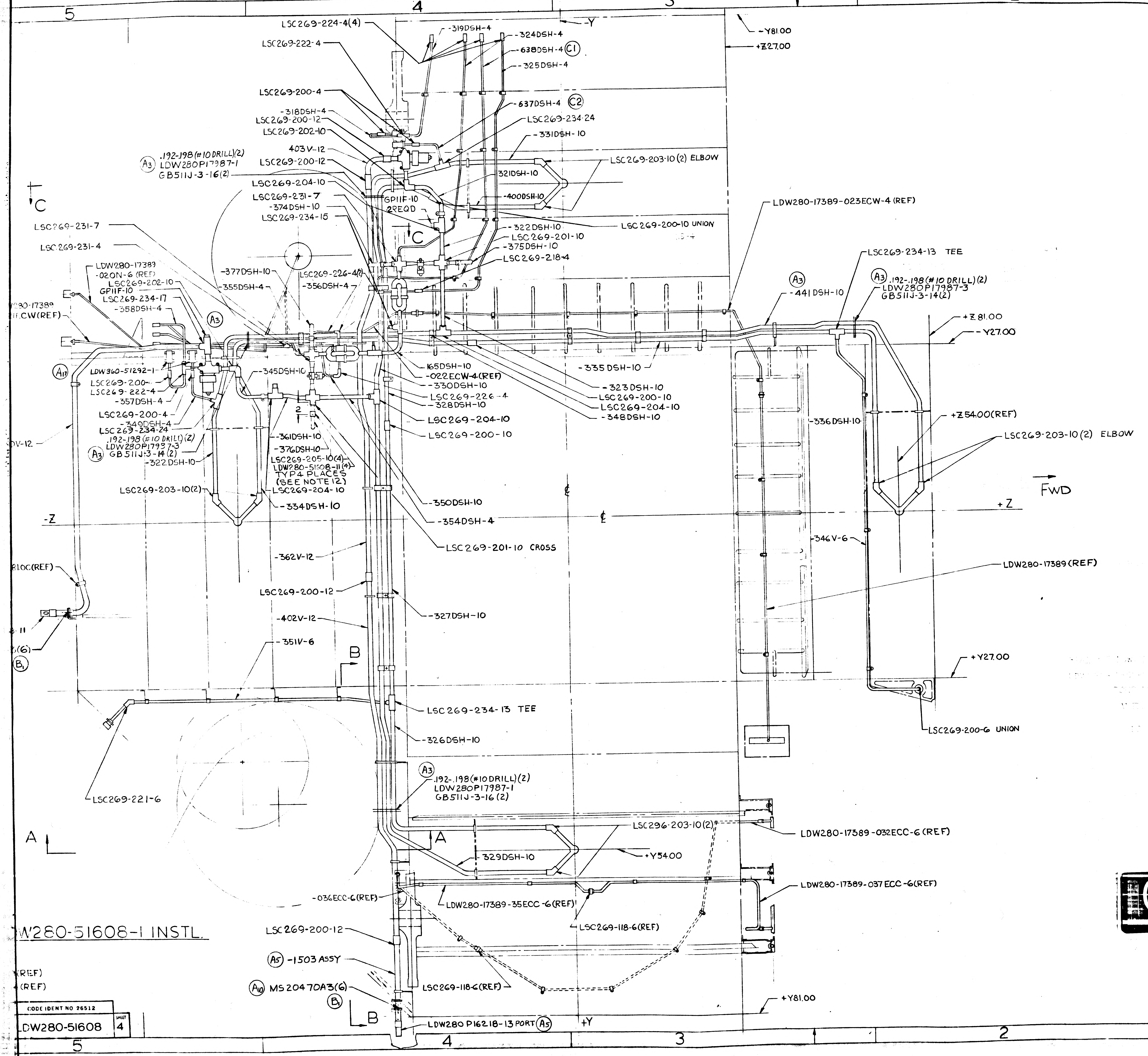
5
4
3
2
1
LSC269-224-4(4)
-319DSH-4
-324DSH-4
-Y
-638DSH-4 (C1)
-325DSH-4
LSC269-222-4
-Y81.00
+Z27.00
LSC269-200-4
-637DSH-4 (C2)
-318DSH-4
LSC269-200-12
LSC269-234-24
LSC269-202-10
-331DSH-10
403V-12
(A3) .192-.198(#10 DRILL)(2)
LDW280P17987-1
GB511J-3-16(2)
LSC269-200-12
LSC269-203-10(2) ELBOW
321DSH-10
LSC269-204-10
LSC269-231-7
-400DSH-10
GP11F-10
2REQD
-374DSH-10
LSC269-234-15
LSC269-200-10 UNION
C
C
-322DSH-10
LSC269-201-10
-375DSH-10
LSC269-218-4
LSC269-231-7
LSC269-231-4
LDW280-17389-023ECW-4 (REF)
LDW280-17389
-020N-6 (REF)
-377DSH-10
LSC269-226-4(2)
LSC269-202-10
-355DSH-4
-356DSH-4
GP11F-10
LSC269-234-17
-358DSH-4
280-17389
1ECW(REF)
(A3)
LSC269-234-13 TEE
(A3)
-441DSH-10
(A3) .192-.198(#10 DRILL)(2)
LDW280P17987-3
GB511J-3-14(2)
+Z81.00
-Y27.00
(A17)
LDW360-51292-1
LSC269-200-
LSC269-222-4
-357DSH-4
LSC269-200-4
-349DSH-4
LSC269-234-24
.192-.198(#10 DRILL)(2)
LDW280P17987-3
(A3) GB511J-3-14(2)
-322DSH-10
-345DSH-10
165DSH-10
-022ECW-4(REF)
-330DSH-10
LSC269-226-4
-328DSH-10
LSC269-204-10
LSC269-200-10
-335DSH-10
-323DSH-10
LSC269-200-10
LSC269-204-10
-348DSH-10
2
-361DSH-10
-376DSH-10
LSC269-205-10(4)
LDW280-51608-11(4)
TYP 4 PLACES
(SEE NOTE 12)
LSC269-203-10(2)
LSC269-204-10
-334DSH-10
-336DSH-10
+Z54.00(REF)
LSC269-203-10(2) ELBOW
FWD
V-12
-Z
-350DSH-10
-354DSH-4
℄
℄
+Z
LSC269-201-10 CROSS
-346V-6
81.0C(REF)
-362V-12
LDW280-17389(REF)
LSC269-200-12
-327DSH-10
-402V-12
-11
(6)
(B1)
-351V-6
B
+Y27.00
LSC269-234-13 TEE
-326DSH-10
LSC269-200-6 UNION
LSC269-221-6
(A3) .192-.198(#10 DRILL)(2)
LDW280P17987-1
GB511J-3-16(2)
A
A
LSC296-203-10(2)
LDW280-17389-032ECC-6(REF)
-329DSH-10
+Y54.00
-036ECC-6(REF)
LDW280-17389-35ECC-6(REF)
LDW280-17389-037ECC-6(REF)
LSC269-118-6(REF)
W280-51608-1 INSTL.
LSC269-200-12
(A5) -1503 ASSY
(REF)
(REF)
(A10) MS20470A3(6)
LSC269-118-6(REF)
(B1)
B
+Y81.00
LDW280P16218-13 PORT (A5)
+Y
5
4
3
2
C
B
A

CODE IDENT NO 26512

LDW280-51608 SHEET 4

02/02 NAS 9-1100

MANUFACTURING OPERATIONS
UNLESS OTHERWISE SPECIFIED
NOTES CHECKED √ APPLY TO THIS DWG.

PART NUMBER
AND ALL OTHER MARKINGS
IN REGION MARKED ⊠
USE BOTH SIDES IF NECESSARY.

FILLET AND INSIDE CORNER
RADII TOLERANCES
.016R TO .062R ± .010
.063R TO .250R ± .015
OVER .250R ± .030

DEPTH SHOWN FOR TAPPED
HOLES IS FULL THDS. 2-3 IMP THDS.
BEYOND PERMISSIBLE.

EXTERNAL THREAD LENGTH
SHOWN INCLUDES
2 IMPERFECT THREADS MAX.

DO NOT CADMIUM PLATE & PAINT
HOLES OR SURFACES MARKED
WITH DOUBLE ASTERISK.

MISMATCH STEP OF ± .005
PERMISSIBLE DUE TO CHANGE
OF CUTTERS AT INSIDE
INTERSECTING SURFACES.

DIAMETERS MARKED
MUST BE CONCENTRIC WITHIN
FULL INDICATOR
READING

HOLES MUST BE KEPT FREE OF
CHROME PLATING SOLUTION.

ALL DIMENSIONS SHOWN TO BE MET
AFTER CADMIUM PLATING.
THICKNESS OF PLATE .0003 MIN.
TO .0005 MAX. MIN. THICKNESS TO
BE .0002 ON THREADED AREAS.
NO ALLOWANCE FOR PLATING IN
HOLES

125 √ SURFACE ROUGHNESS
INCLUDING REAMED HOLES
PER MIL-STD-10

200 √ FOR ALL DRILLED HOLES

REMOVE ALL BURRS.
BREAK ALL EDGES .015-.031

INSPECTION INFORMATION
MINIMUM PERMISSIBLE
AVERAGE EDGE DISTANCE
MARKED IS

SYMBOL √ DENOTES SURFACE
TO BE MACHINED

UNLESS OTHERWISE SPECIFIED
TOLERANCE ON FLANGES IS ± 1/32

LENGTHS OF AN, NAS & MS AL ALY
RIVETS SHORTER THAN 1 INCH ARE
NOT SPECIFIED.

TOLERANCE ON LOFTED
DELINEATIONS IS

DWG SIZE 34 X 88

PRINTING INFO ONLY
FULL SIZE SHEET AREA (36 X 100)– 25 SQ. FT.
1/2 SIZE SHEET AREA (1/4 OF FULL)– 6 SQ. FT.

PRINT TRIM LINE

LDW280-51608 D

LDW280-51608 D

LDW280-51608

	GRUMMAN AIRCRAFT ENGRG CORP., BETHPAGE, L. I., NEW YORK			
	SIZE J	CODE IDENT NO. 26512	LDW280-51608	D
LEM MODEL OR END ITEM	SCALE 1:5			SHEET 4.00

2PR

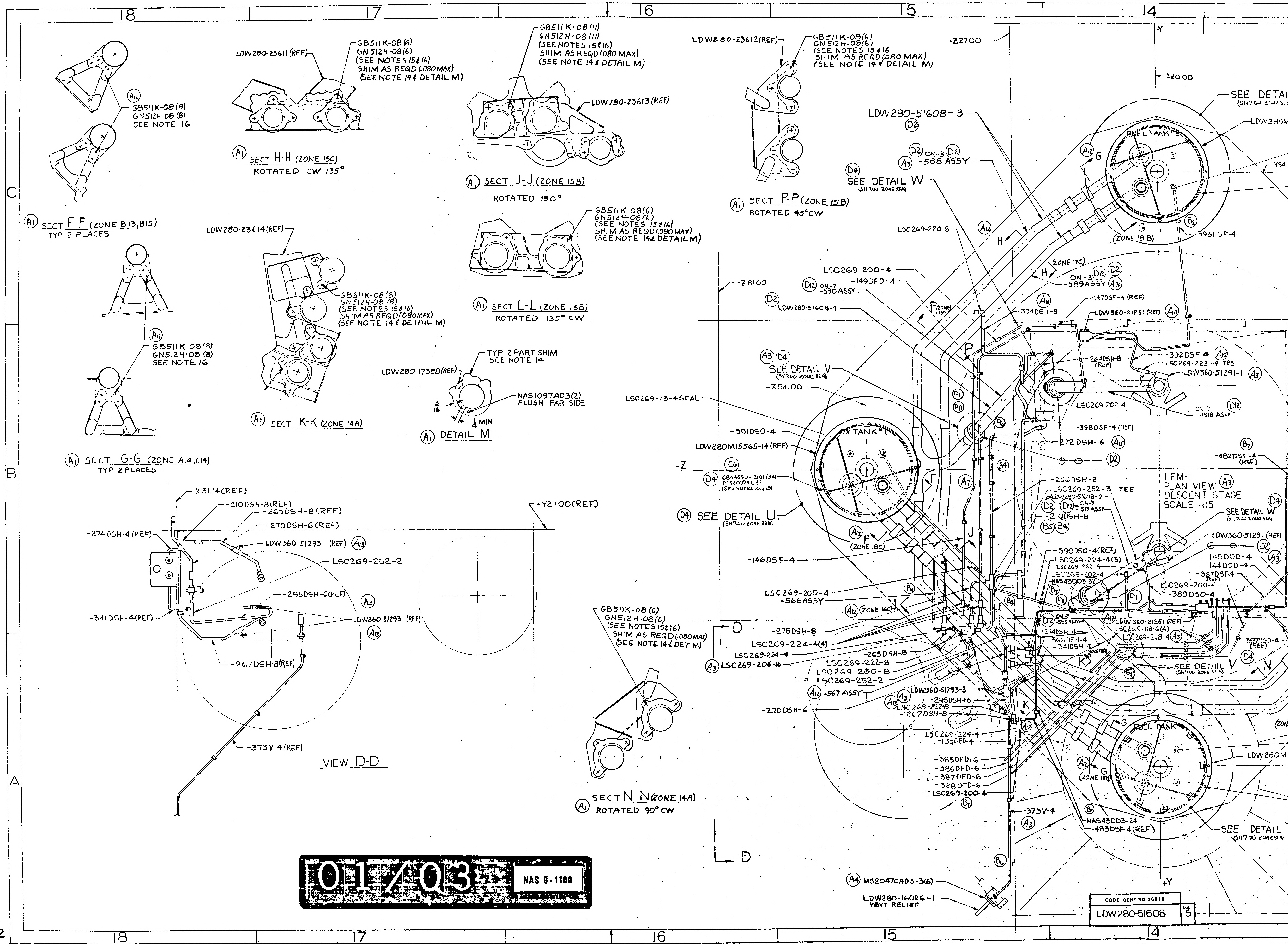

18
17
16
15
14
C
B
A
SECT F-F (ZONE B13, B15)
TYP 2 PLACES
GB511K-08 (8)
GN512H-08 (8)
SEE NOTE 16
SECT G-G (ZONE A14, C14)
TYP 2 PLACES
LDW280-23611 (REF)
GB511K-08 (6)
GN512H-08 (6)
(SEE NOTES 15 & 16)
SHIM AS REQD (.080 MAX)
(SEE NOTE 14 & DETAIL M)
SECT H-H (ZONE 15C)
ROTATED CW 135°
LDW280-23614 (REF)
SECT K-K (ZONE 14A)
GB511K-08 (11)
GN512H-08 (11)
LDW280-23613 (REF)
SECT J-J (ZONE 15B)
ROTATED 180°
SECT L-L (ZONE 13B)
ROTATED 135° CW
LDW280-17388 (REF)
TYP 2 PART SHIM
SEE NOTE 14
NAS1097AD3 (2)
FLUSH FAR SIDE
3/16
1/4 MIN
DETAIL M
LDW280-23612 (REF)
SECT P-P (ZONE 15B)
ROTATED 45° CW
X131.14 (REF)
-210DSH-8 (REF)
-265DSH-8 (REF)
-270DSH-6 (REF)
-274DSH-4 (REF)
LDW360-51293 (REF)
LSC269-252-2
-295DSH-6 (REF)
-341DSH-4 (REF)
-267DSH-8 (REF)
-373Y-4 (REF)
VIEW D-D
+Y2700 (REF)
SECT N-N (ZONE 14A)
ROTATED 90° CW
D
-Z2700
-Z0.00
SEE DETAIL
LDW280-51608-3
D2 ON-3 D12
A3 -588 ASSY
SEE DETAIL W
(SH 7.00 ZONE 33A)
FUEL TANK #2
G
(ZONE 18 B)
-393DSF-4
LSC269-220-8
H
(ZONE 17C)
ON-3
-589 ASSY
LSC269-200-4
-149DFD-4
ON-7
-590 ASSY
LDW280-51608-7
-Z81.00
P (ZONE 15C)
-394DSH-8
-1470SF-4 (REF)
LDW360-21251 (REF)
J
-392DSF-4
LSC269-222-4 TEE
LDW360-51291-1
SEE DETAIL V
(SH 7.00 ZONE 32A)
-Z54.00
-264DSH-8 (REF)
LSC269-202-4
ON-7
-1518 ASSY
LSC269-113-4 SEAL
-391DSO-4
LDW280M15565-14 (REF)
OX TANK #1
-398DSF-4 (REF)
-272DSH-6
-482DSF-4 (REF)
-Z
6844590-12101 (34)
MS20995C32
(SEE NOTES 25 & 23)
SEE DETAIL U
(SH 7.00 ZONE 33B)
F
(ZONE 18C)
-266DSH-8
LSC269-252-3 TEE
LDW280-51608-9
ON-9
-1519 ASSY
-210DSH-8
LEM-1
PLAN VIEW
DESCENT STAGE
SCALE-1:5
SEE DETAIL W
(SH 7.00 ZONE 33A)
LDW360-51291 (REF)
-146DSF-4
-390DSO-4 (REF)
LSC269-224-4 (3)
LSC269-222-4
LSC269-202-4
NAS43DD3-32
-145DOD-4
-144DOD-4
-367DSF-4 (REF)
LSC269-200-
-389DSO-4
LSC269-200-4
-566 ASSY
(ZONE 16C)
-585 ASSY
-274DSH-4
-366DSH-4
-341DSH-4
LDW360-21251 (REF)
LSC269-118-6 (4)
LSC269-218-4
-397DSO-4 (REF)
-275DSH-8
LSC269-224-4 (4)
LSC269-224-4
LSC269-206-16
-265DSH-8
LSC269-222-8
LSC269-200-8
LSC269-252-2
-567 ASSY
LDW360-51293-3
-295DSH-6
LSC269-222-8
-267DSH-8
SEE DETAIL V
(SH 7.00 ZONE 32A)
N
K
-270DSH-6
LSC269-224-4
-1350FD-4
FUEL TANK #1
G
(ZONE 18B)
LDW280M
-385DFD-6
-386DFD-6
-387DFD-6
-388DFD-6
LSC269-200-4
-373V-4
NAS43DD3-24
-483DSF-4 (REF)
SEE DETAIL
(SH 7.00 ZONE 31A)
+Y
MS20470AD3-3 (6)
LDW280-16026-1
VENT RELIEF
2/2

01/Q3 NAS 9-1100

CODE IDENT NO. 26512
LDW280-51608
SHEET 5

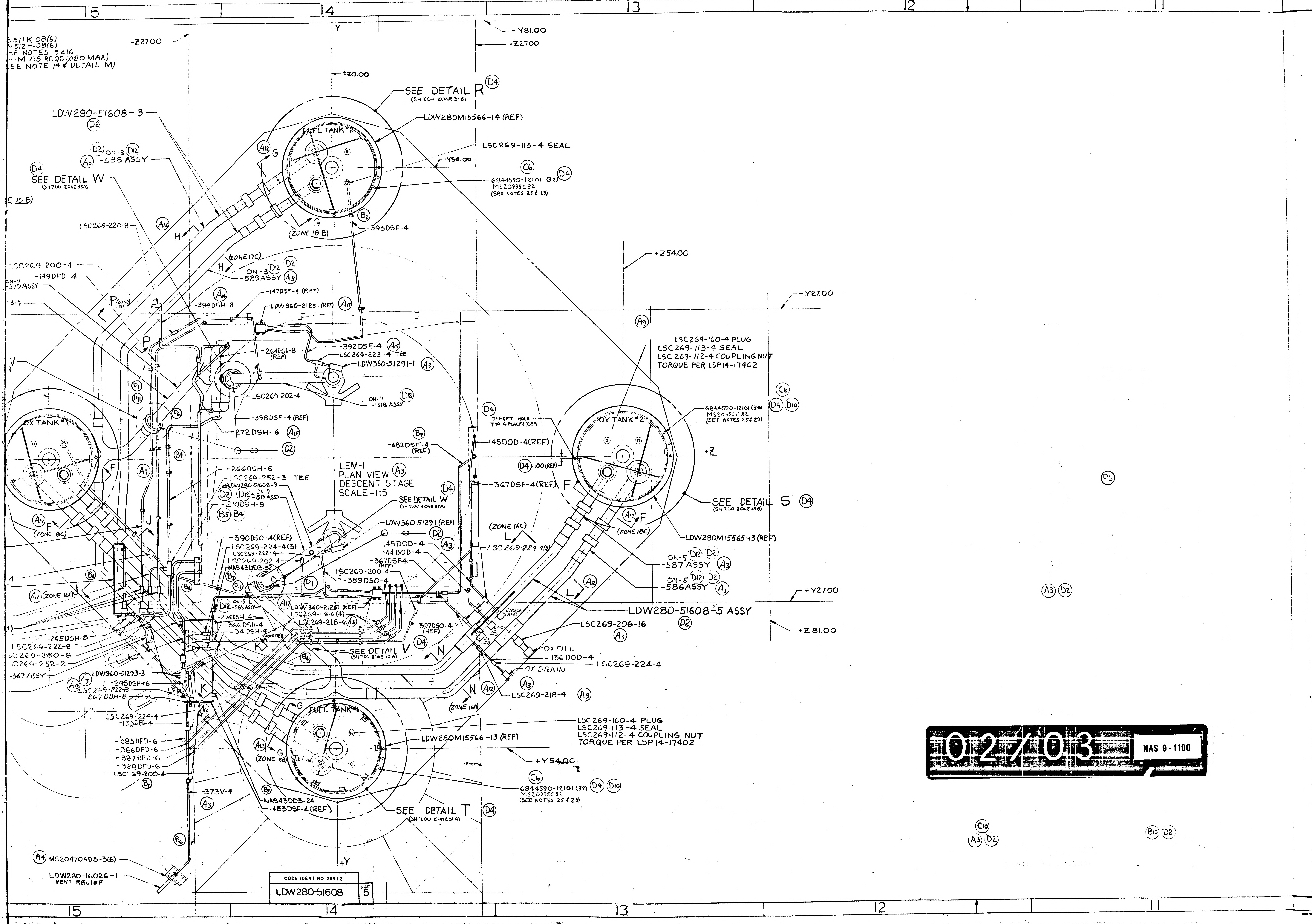
LEM-1
PLAN VIEW
DESCENT STAGE
SCALE-1:5
FUEL TANK #2
FUEL TANK #1
OX TANK #1
OX TANK #2
SEE DETAIL R (SH 7.00 ZONE 31B)
SEE DETAIL W (SH 7.00 ZONE 33A)
SEE DETAIL S (SH 7.00 ZONE 29B)
SEE DETAIL T (SH 7.00 ZONE 31A)
SEE DETAIL V (SH 7.00 ZONE 32A)
LDW280-51608-3
LDW280-51608-5 ASSY
LDW280M15566-14 (REF)
LDW280M15566-13 (REF)
LDW280M15565-13 (REF)
LSC269-113-4 SEAL
6844590-12101 (32) MS20995C32 (SEE NOTES 25 & 29)
LSC269-160-4 PLUG
LSC269-113-4 SEAL
LSC269-112-4 COUPLING NUT
TORQUE PER LSP14-17402
-393DSF-4
-392DSF-4
LSC269-222-4 TEE
LDW360-51291-1
-264DSH-8 (REF)
LSC269-202-4
-398DSF-4 (REF)
272DSH-6
-394DSH-8
-147DSF-4 (REF)
LDW360-21251 (REF)
ON-3 -588 ASSY
ON-3 -589 ASSY
ON-7 -1518 ASSY
ON-5 -587 ASSY
ON-5 -586 ASSY
-482DSF-4 (REF)
145DOD-4 (REF)
-367DSF-4 (REF)
OFFSET HOLE TYP 4 PLACES (REF)
-266DSH-8
LSC269-252-3 TEE
LDW280-51608-9
-210DSH-8
-390DSO-4 (REF)
LSC269-224-4 (3)
LSC269-222-4
LSC269-202-4
NAS43DD3-32
LSC269-200-4
-389DSO-4
145DOD-4
144DOD-4
-367DSF4 (REF)
LDW360-51291 (REF)
LSC269-224-4 (3)
-274DSH-4
-366DSH-4
-341DSH-4
LSC269-118-6 (4)
LSC269-218-4
-397DSO-4 (REF)
LSC269-206-16
OX FILL
-136DOD-4
OX DRAIN
LSC269-224-4
LSC269-218-4
-265DSH-8
LSC269-222-8
LSC269-200-8
LSC269-252-2
-567 ASSY
LDW360-51293-3
-295DSH-6
LSC269-222-8
-267DSH-8
LSC269-224-4
-135DFD-4
-385DFD-6
-386DFD-6
-387DFD-6
-388DFD-6
LSC269-200-4
-373V-4
NAS43DD3-24
-483DSF-4 (REF)
MS20470AD3-3(6)
LDW280-16026-1 VENT RELIEF
LSC269-220-8
LSC269-200-4
-149DFD-4
-Z27.00
-Y81.00
+Z27.00
±Z0.00
-Y54.00
+Z54.00
-Y27.00
+Z
+Y27.00
+Z81.00
+Y54.00
+Y
-Y
(ZONE 18B)
(ZONE 17C)
(ZONE 16C)
(ZONE 18C)
(ZONE 16A)
MS20995C32 (SEE NOTES 25 & 29)
SEE NOTE 14 & DETAIL M
SHIM AS REQD (.080 MAX)
SEE NOTES 15 & 16
15
14
13
12
11
CODE IDENT NO. 26512
LDW280-51608
SHEET 5

02/03

NAS 9-1100

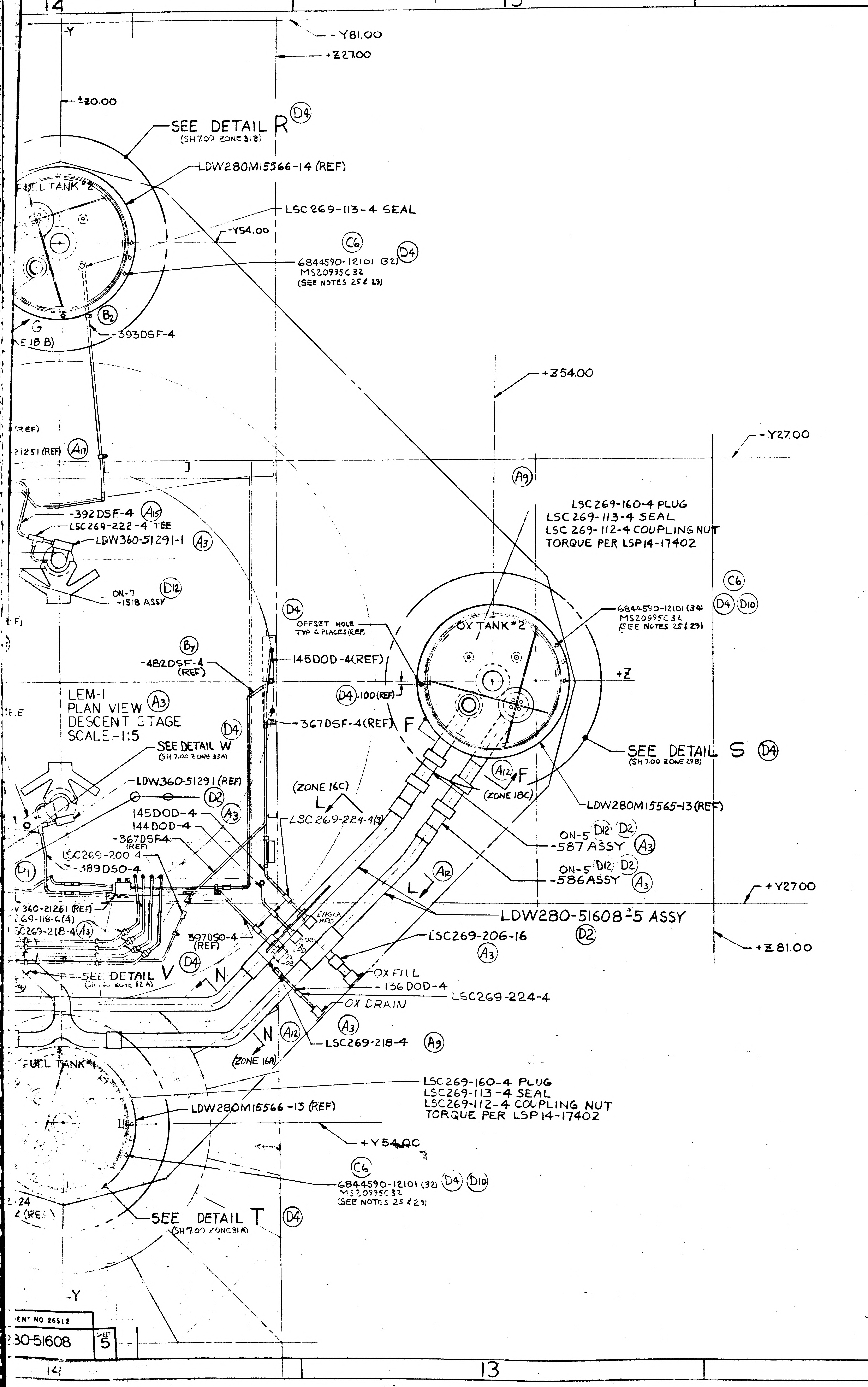
14
13
12
-Y
-Y81.00
+Z27.00
±Z0.00
SEE DETAIL R (D4)
(SH 7.00 ZONE 31B)
LDW280M15566-14 (REF)
FUEL TANK #2
LSC269-113-4 SEAL
-Y54.00
(C6)
6844590-12101 (32) (D4)
MS20995C32
(SEE NOTES 25 & 29)
(B2)
-393DSF-4
G
E 18 B)
+Z54.00
-Y27.00
(REF)
21251 (REF) (A17)
-392DSF-4 (A15)
LSC269-222-4 TEE
LDW360-51291-1 (A3)
ON-7
-1518 ASSY (D12)
(A9)
LSC269-160-4 PLUG
LSC269-113-4 SEAL
LSC269-112-4 COUPLING NUT
TORQUE PER LSP14-17402
(C6)
6844590-12101 (34) (D4) (D10)
MS20995C32
(SEE NOTES 25 & 29)
(D4)
OFFSET HOLE
TYP 4 PLACES (REF)
OX TANK #2
(B7)
-482DSF-4
(REF)
145DOD-4(REF)
+Z
(D4) .100 (REF)
LEM-1
PLAN VIEW (A3)
DESCENT STAGE
SCALE-1:5
(D4)
-367DSF-4(REF)
F
SEE DETAIL S (D4)
(SH 7.00 ZONE 29B)
SEE DETAIL W
(SH 7.00 ZONE 33A)
(A12) F
(ZONE 16C)
L
(ZONE 18C)
LDW280M15565-13 (REF)
LDW360-51291 (REF)
(D2)
145DOD-4
(A3)
144DOD-4
LSC269-224-4(3)
ON-5 (D12) (D2)
-587 ASSY (A3)
-367DSF4
(REF)
LSC269-200-4
-389DSO-4
(D1)
ON-5 (D12) (D2)
-586ASSY (A3)
(A12)
L
+Y27.00
V360-21251 (REF)
269-118-6(4)
SC269-218-4 (A3)
LDW280-51608-5 ASSY
(D2)
397DSO-4
(REF)
ENG OX
HPL
LSC269-206-16
(A3)
+Z81.00
SEE DETAIL V (D4)
N
OX FILL
-136DOD-4
LSC269-224-4
OX DRAIN
(A3)
N (A12)
LSC269-218-4 (A9)
(ZONE 16A)
FUEL TANK #1
LSC269-160-4 PLUG
LSC269-113-4 SEAL
LSC269-112-4 COUPLING NUT
TORQUE PER LSP14-17402
LDW280M15566-13 (REF)
+Y54.00
(C6)
6844590-12101 (32) (D4) (D10)
MS20995C32
(SEE NOTES 25 & 29)
-24
(REF)
SEE DETAIL T (D4)
(SH 7.00 ZONE 31A)
+Y
IDENT NO 26512
30-51608
SHEET 5
14
13

(D6)

(A3) (D2)

(C10)
(A3) (D2)

(B10) (D2)

03/03

NAS 9-1100

MANUFACTURING OPERATIONS
UNLESS OTHERWISE SPECIFIED
NOTES CHECKED √ APPLY TO THIS DWG.

PART NUMBER
AND ALL OTHER MARKINGS
IN REGION MARKED ▨
USE BOTH SIDES IF NECESSARY.

FILLET AND INSIDE CORNER
RADII TOLERANCES
.016R TO .062R ± .010
.063R TO .250R ± .015
OVER .250R ± .030

DEPTH SHOWN FOR TAPPED
HOLES IS FULL THDS. 2-3 IMP THDS.
BEYOND PERMISSIBLE.

EXTERNAL THREAD LENGTH
SHOWN INCLUDES
2 IMPERFECT THREADS MAX.

DO NOT CADMIUM PLATE & PAINT
HOLES OR SURFACES MARKED
WITH DOUBLE ASTERISK.

MISMATCH STEP OF ± .005
PERMISSIBLE DUE TO CHANGE
OF CUTTERS AT INSIDE
INTERSECTING SURFACES.

DIAMETERS MARKED
MUST BE CONCENTRIC WITHIN
FULL INDICATOR
READING

HOLES MUST BE KEPT FREE OF
CHROME PLATING SOLUTION.

ALL DIMENSIONS SHOWN TO BE MET
AFTER CADMIUM PLATING.
THICKNESS OF PLATE .0003 MIN.
TO .0005 MAX. MIN. THICKNESS TO
BE .0002 ON THREADED AREAS.
NO ALLOWANCE FOR PLATING IN
HOLES

125 SURFACE ROUGHNESS
INCLUDING REAMED HOLES
PER MIL-STD-10

200 FOR ALL DRILLED HOLES

REMOVE ALL BURRS.
BREAK ALL EDGES .015-.031

INSPECTION INFORMATION
MINIMUM PERMISSIBLE
AVERAGE EDGE DISTANCE
MARKED IS

SYMBOL √ DENOTES SURFACE
TO BE MACHINED

UNLESS OTHERWISE SPECIFIED
TOLERANCE ON FLANGES IS ± 1/32

LENGTHS OF AN, NAS & MS AL ALY
RIVETS SHORTER THAN 1 INCH ARE
NOT SPECIFIED.

TOLERANCE ON LOFTED
DELINEATIONS IS

DWG SIZE 34 X 88

PRINTING INFO ONLY
FULL SIZE SHEET AREA (36 X 100) = 25 SQ. FT.
1/2 SIZE SHEET AREA (1/4 OF FULL) = 6 SQ. FT.

PRINT TRIM LINE

LDW280-51608 D

LDW280-51608 D

GRUMMAN AIRCRAFT ENGRG CORP., BETHPAGE, L. I., NEW YORK

LM	SIZE J	CODE IDENT NO. 26512	LDW280-51608 D
MODEL OR END ITEM	SCALE 1:5		SHEET 5

10

2FR

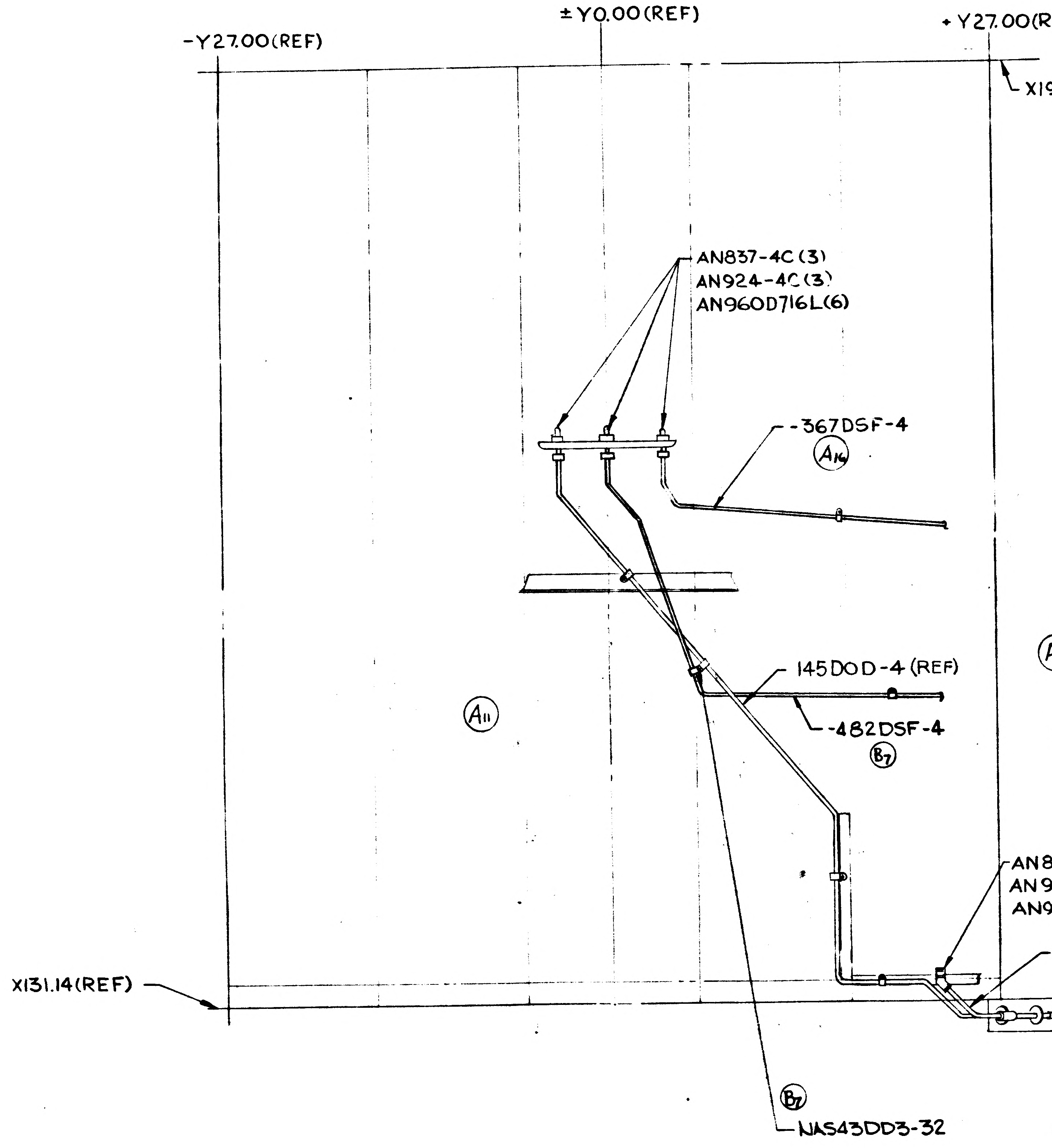
-Y27.00(REF)
±Y0.00(REF)
+Y27.00(REF)
X196.00(REF)
AN837-4C(3)
AN924-4C(3)
AN960D716L(6)
-367DSF-4
A16
A11
145DOD-4 (REF)
-482DSF-4
B7
AN837-4C
AN924-4C
AN960D716L(2)
-144DOD-4 (REF)
A16
X131.14(REF)
B7
NAS43DD3-32

VIEW OF +Z27.00 WALL

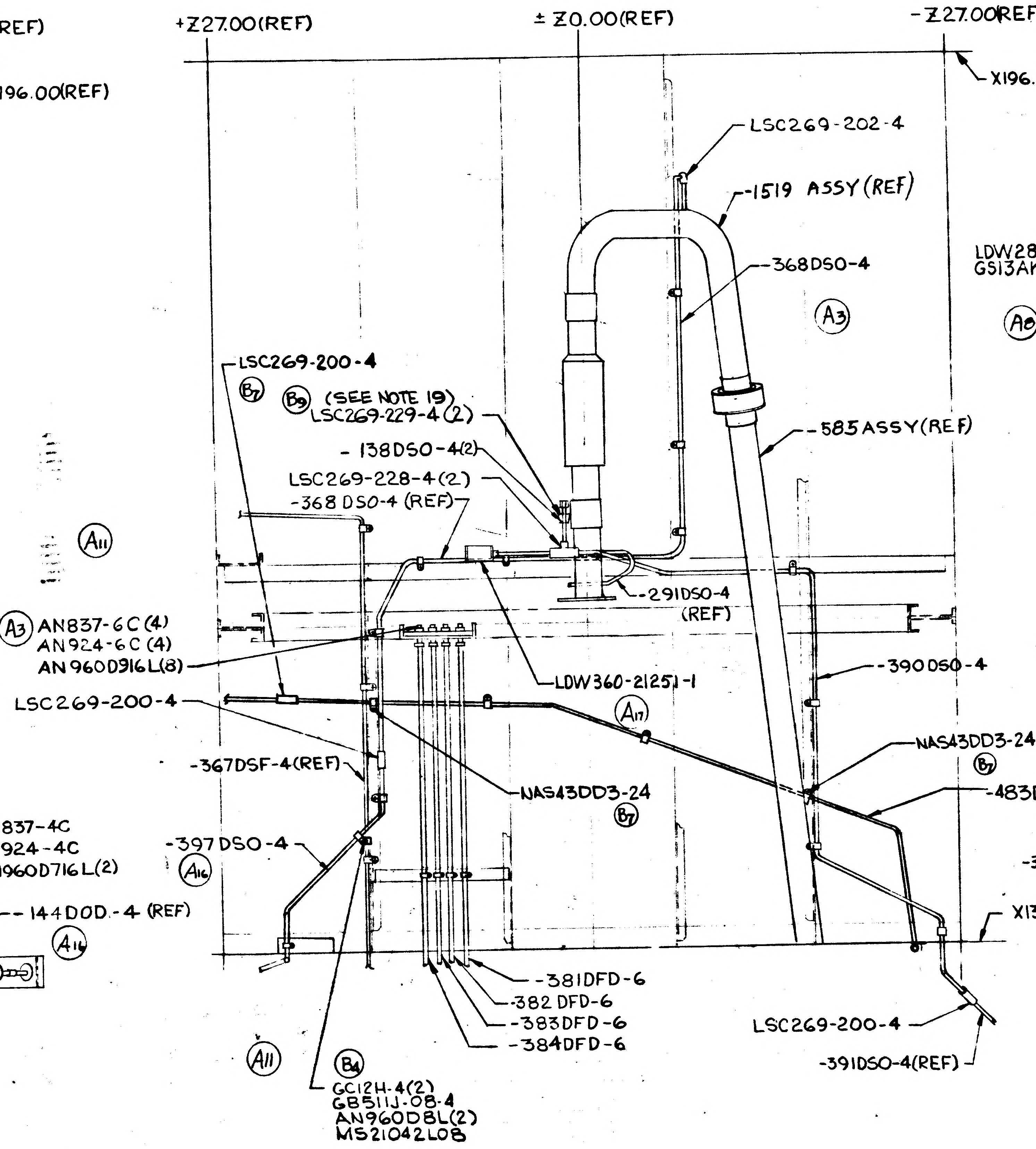
+Z27.00(REF)
±Z0.00(REF)
-Z27.00(REF)
X196.00(REF)
LSC269-202-4
-1519 ASSY (REF)
-368DSO-4
A3
-585 ASSY (REF)
LSC269-200-4
B7
B9 (SEE NOTE 19)
LSC269-229-4(2)
-138DSO-4(2)
LSC269-228-4(2)
-368 DSO-4 (REF)
-291DSO-4 (REF)
A11
A3 AN837-6C(4)
AN924-6C(4)
AN960D916L(8)
LDW360-21251-1
-390DSO-4
LSC269-200-4
A17
NAS43DD3-24
B7
-367DSF-4(REF)
NAS43DD3-24
B7
-483DSF-4
B7
-397DSO-4
A16
X131.14(REF)
-381DFD-6
-382 DFD-6
-383DFD-6
-384DFD-6
LSC269-200-4
-391DSO-4(REF)
A11
B4
GC12H-4(2)
GB511J-08-4
AN960D8L(2)
MS21042L08

VIEW OF +Y27.00 WALL

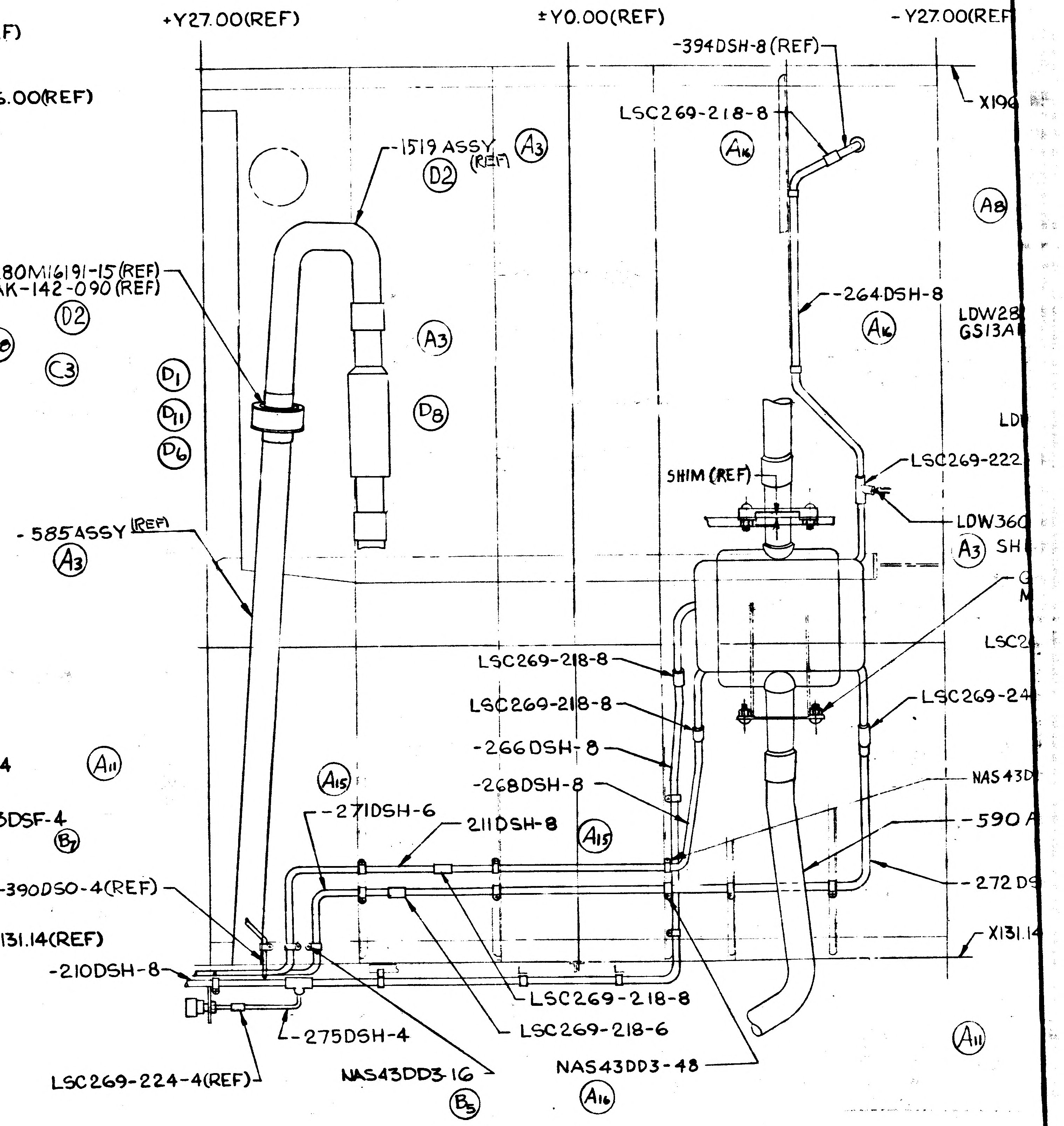
+Y27.00(REF)
±Y0.00(REF)
-Y27.00(REF)
-394DSH-8 (REF)
X196
LSC269-218-8
A16
-1519 ASSY (REF)
D2
A3
A8
LDW280M16191-15(REF)
GS13AK-142-090 (REF)
D2
A8
C3
D1
D11
D6
A3
D8
-264DSH-8
A16
LDW28
GS13A
SHIM (REF)
LSC269-222
LDW360
A3
-585 ASSY (REF)
A3
LSC269-218-8
LSC269-218-8
-266DSH-8
-268DSH-8
LSC269-24
A15
-271DSH-6
211DSH-8
A15
A11
NAS43D
-590
-272 D
-390DSO-4(REF)
X131.14
-210DSH-8
-275DSH-4
LSC269-218-8
LSC269-218-6
NAS43DD3-48
LSC269-224-4(REF)
NAS43DD3-16
B5
A16
A11

VIEW OF -Z27.00 WALL

01/02

NAS 9-1100

CODE IDENT NO. 26512

LDW280-51608

SHEET 6

23 22 21 20 19

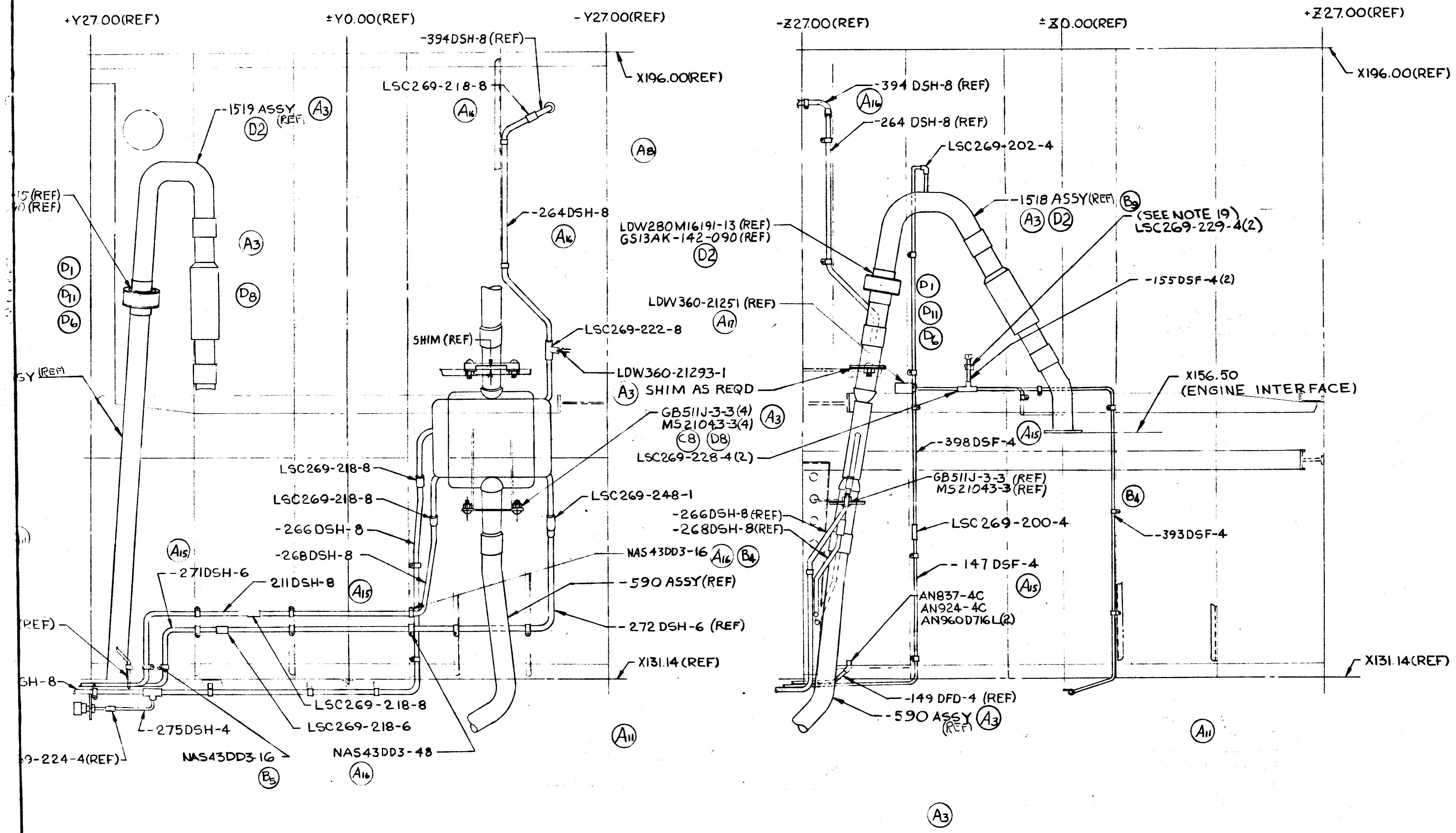

+Y27.00(REF)
±Y0.00(REF)
-Y27.00(REF)
-394DSH-8(REF)
X196.00(REF)
LSC269-218-8
A16
-1519 ASSY (REF) A3 D2
A8
15(REF)
0(REF)
-264DSH-8
A16
A3
LDW280M16191-13 (REF)
GS13AK-142-090(REF)
D2
D1
D11
D6
D8
LDW360-21251 (REF)
A17
SHIM (REF)
LSC269-222-8
GY (REF)
LDW360-21293-1
A3 SHIM AS REQD
GB511J-3-3(4)
MS21043-3(4)
A3
C8 D8
LSC269-228-4(2)
LSC269-218-8
LSC269-218-8
LSC269-248-1
-266DSH-8
-268DSH-8
A15
-271DSH-6
211DSH-8
A15
NAS43DD3-16 A16 B4
-590 ASSY(REF)
REF)
-272 DSH-6 (REF)
X131.14 (REF)
GH-8
LSC269-218-8
LSC269-218-6
-275DSH-4
9-224-4(REF)
NAS43DD3-16
B5
NAS43DD3-48
A16
A11
-Z27.00(REF)
±Z0.00(REF)
+Z27.00(REF)
X196.00(REF)
-394 DSH-8 (REF)
A16
-264 DSH-8 (REF)
LSC269-202-4
-1518 ASSY(REF) B9
A3 D2
(SEE NOTE 19)
LSC269-229-4(2)
-155DSF-4(2)
D1
D11
D6
X156.50
(ENGINE INTERFACE)
A15
-398DSF-4
GB511J-3-3 (REF)
MS21043-3(REF)
-266DSH-8(REF)
-268DSH-8(REF)
LSC269-200-4
B4
-393DSF-4
-147 DSF-4
A15
AN837-4C
AN924-4C
AN960D716L(2)
X131.14(REF)
-149 DFD-4 (REF)
-590 ASSY (REF) A3
A11

A3

VIEW OF -Y27.00 WALL

VIEW OF -Z27.00 WALL

MANUFACTURING OPERATIONS UNLESS OTHERWISE SPECIFIED NOTES CHECKED √ APPLY TO THIS DWG.	
PART NUMBER AND ALL OTHER MARKINGS IN REGION MARKED ⊠ USE BOTH SIDES IF NECESSARY.	
FILLET AND INSIDE CORNER RADII TOLERANCES .016R TO .062R ± .010 .063R TO .250R ± .015 OVER .250R ± .030	
DEPTH SHOWN FOR TAPPED HOLES IS FULL THDS. 2-3 IMP THDS. BEYOND PERMISSIBLE.	
EXTERNAL THREAD LENGTH SHOWN INCLUDES 2 IMPERFECT THREADS MAX.	
DO NOT CADMIUM PLATE & PAINT HOLES OR SURFACES MARKED WITH DOUBLE ASTERISK.	
MISMATCH STEP OF ± .005 PERMISSIBLE DUE TO CHANGE OF CUTTERS AT INSIDE INTERSECTING SURFACES.	
DIAMETERS MARKED MUST BE CONCENTRIC WITHIN FULL INDICATOR READING	
HOLES MUST BE KEPT FREE OF CHROME PLATING SOLUTION.	
ALL DIMENSIONS SHOWN TO BE MET AFTER CADMIUM PLATING. THICKNESS OF PLATE .0003 MIN. TO .0005 MAX. MIN. THICKNESS TO BE .0002 ON THREADED AREAS. NO ALLOWANCE FOR PLATING IN HOLES	
125√ SURFACE ROUGHNESS INCLUDING REAMED HOLES PER MIL-STD-10	
200√ FOR ALL DRILLED HOLES	
REMOVE ALL BURRS. BREAK ALL EDGES .015-.031	
INSPECTION INFORMATION MINIMUM PERMISSIBLE AVERAGE EDGE DISTANCE MARKED IS	
SYMBOL √ DENOTES SURFACE TO BE MACHINED	
UNLESS OTHERWISE SPECIFIED TOLERANCE ON FLANGES IS ± 1/32	
LENGTHS OF AN, NAS & MS AL ALY RIVETS SHORTER THAN 1 INCH ARE NOT SPECIFIED.	
TOLERANCE ON LOFTED DELINEATIONS IS	

DWG SIZE 28 X 84

PRINTING INFO ONLY
FULL SIZE SHEET AREA (30 X 76) = 20 SQ. FT.
1/2 SIZE SHEET AREA (1/4 OF FULL) = 5 SQ. FT.

PRINT TRIM LINE

C

B

A

LDW280-51608 D

LDW280-51608 D

02/02

NAS 9-1100

CODE IDENT NO. 26512	
LDW280-51608	SHEET 6

	GRUMMAN AIRCRAFT ENGRG CORP., BETHPAGE, L. I., NEW YORK			
LEM	SIZE H	CODE IDENT NO. 26512	LDW280-51608	D
MODEL OR END ITEM	SCALE 1:5		SHEET 6	

23 22 21 20 19

2/2

01/02 NAS 9-1100

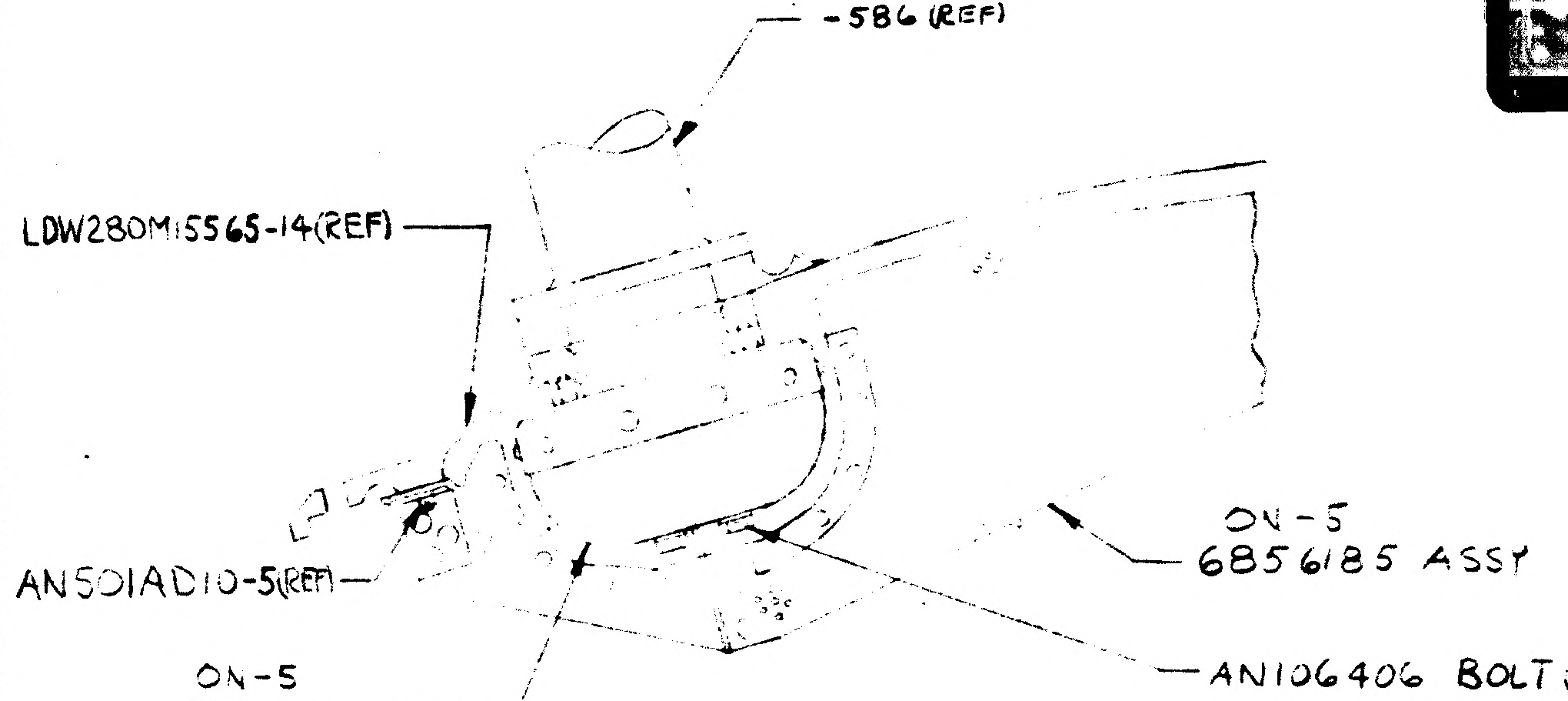
-586 (REF)
LDW280M15565-14(REF)
AN501AD10-5(REF)
ON-5
6856185 ASSY
ON-5
6856183 ASSY
AN106406 BOLT (REF)

SECTION AD-AD
ZONE 34B

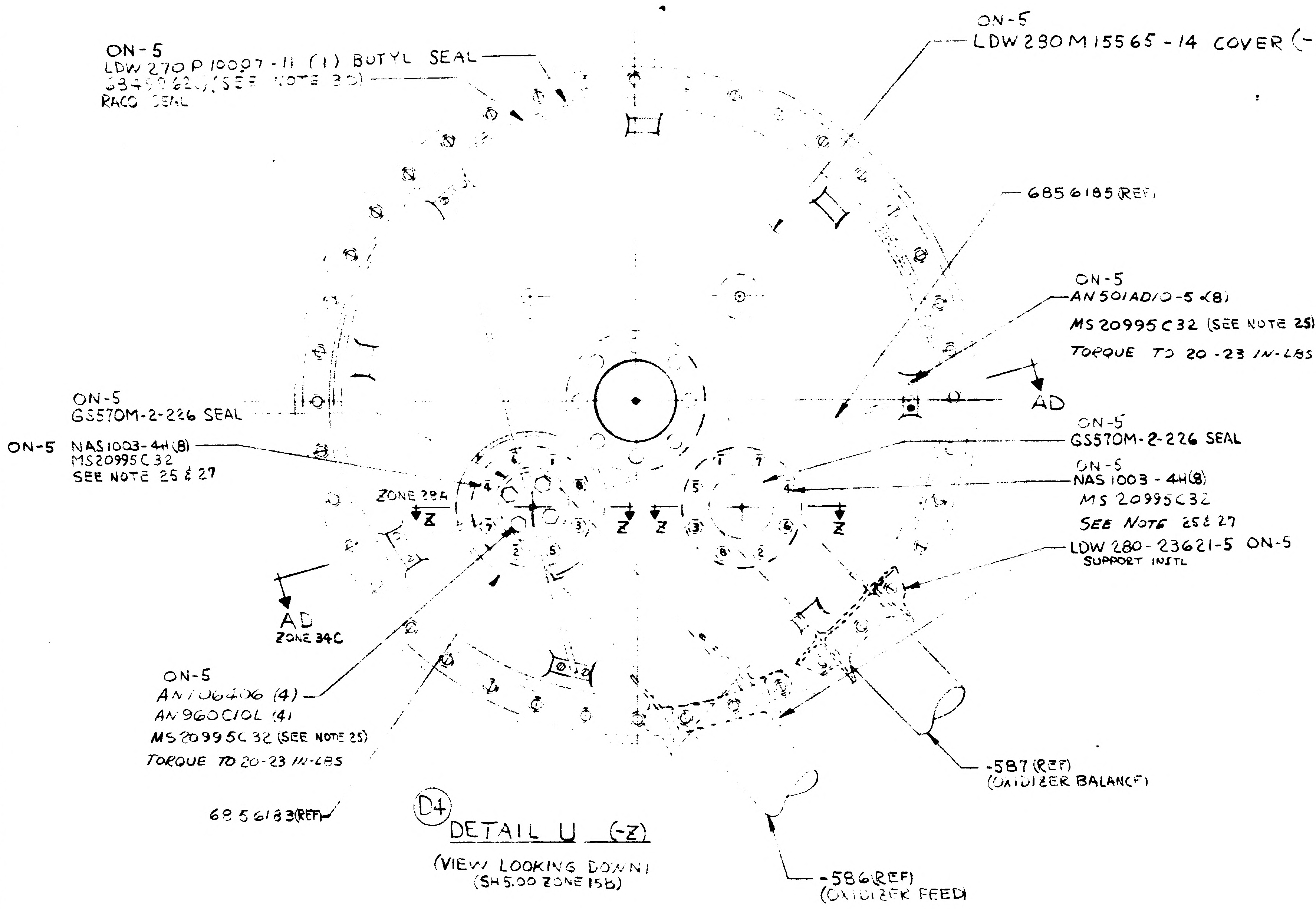
ON-5
LDW 270 P 10007-11 (1) BUTYL SEAL
6849962 (SEE NOTE 30)
RACO SEAL
ON-5
LDW 280 M 15565-14 COVER (-Z)
6856185 (REF)
ON-5
AN 501AD10-5 (8)
MS 20995 C32 (SEE NOTE 25)
TORQUE TO 20-23 IN-LBS
AD
ON-5
GS570M-2-226 SEAL
ON-5 NAS1003-4H (8)
MS20995C32
SEE NOTE 25 & 27
ZONE 29A
Z
Z
Z
Z
ON-5
GS570M-2-226 SEAL
ON-5
NAS 1003-4H(8)
MS 20995C32
SEE NOTE 25 & 27
LDW 280-23621-5 ON-5
SUPPORT INSTL
AD
ZONE 34C
ON-5
AN106406 (4)
AN960C10L (4)
MS20995C32 (SEE NOTE 25)
TORQUE TO 20-23 IN-LBS
6856183(REF)
-587 (REF)
(OXIDIZER BALANCE)
-586(REF)
(OXIDIZER FEED)

(D4) DETAIL U (-Z)
(VIEW LOOKING DOWN)
(SH 5.00 ZONE 15B)

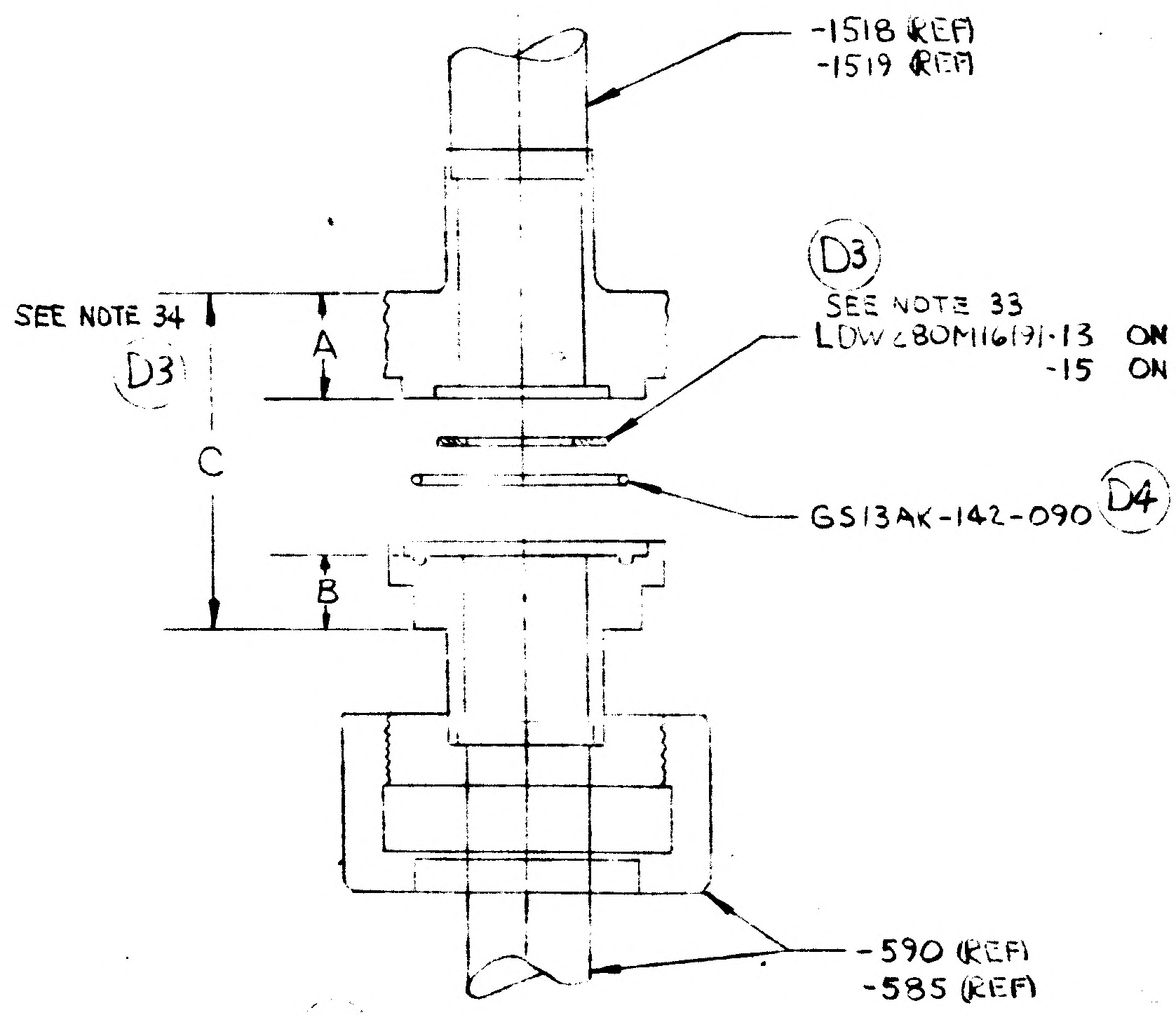
-1518 (REF)
-1519 (REF)
SEE NOTE 34
(D3)
A
C
B
(D3)
SEE NOTE 33
LDW280M16191-13 ON-7
-15 ON-9
GS13AK-142-090 (D4)
-590 (REF)
-585 (REF)

(D2) DETAIL W
(TYPICAL 2 PLACES ON-7 & -9)
(SH 5.00 ZONE 14A & 15C)

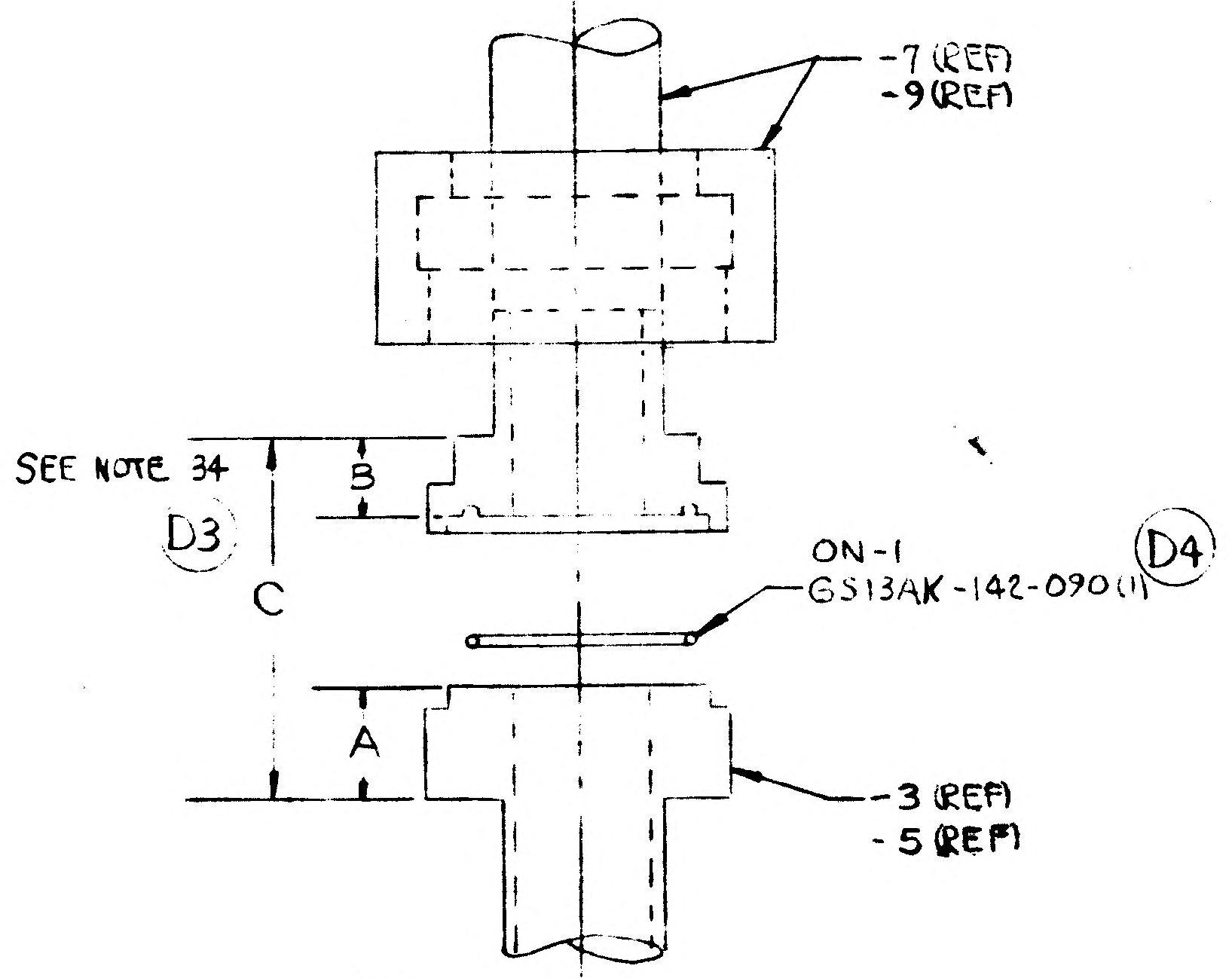
-7 (REF)
-9 (REF)
SEE NOTE 34
(D3)
B
C
A
ON-1
GS13AK-142-090(1) (D4)
-3 (REF)
-5 (REF)

(D2) DETAIL V
(TYPICAL 2 PLACES ON-1)
(SH 5.00 ZONE 14A & 15B)

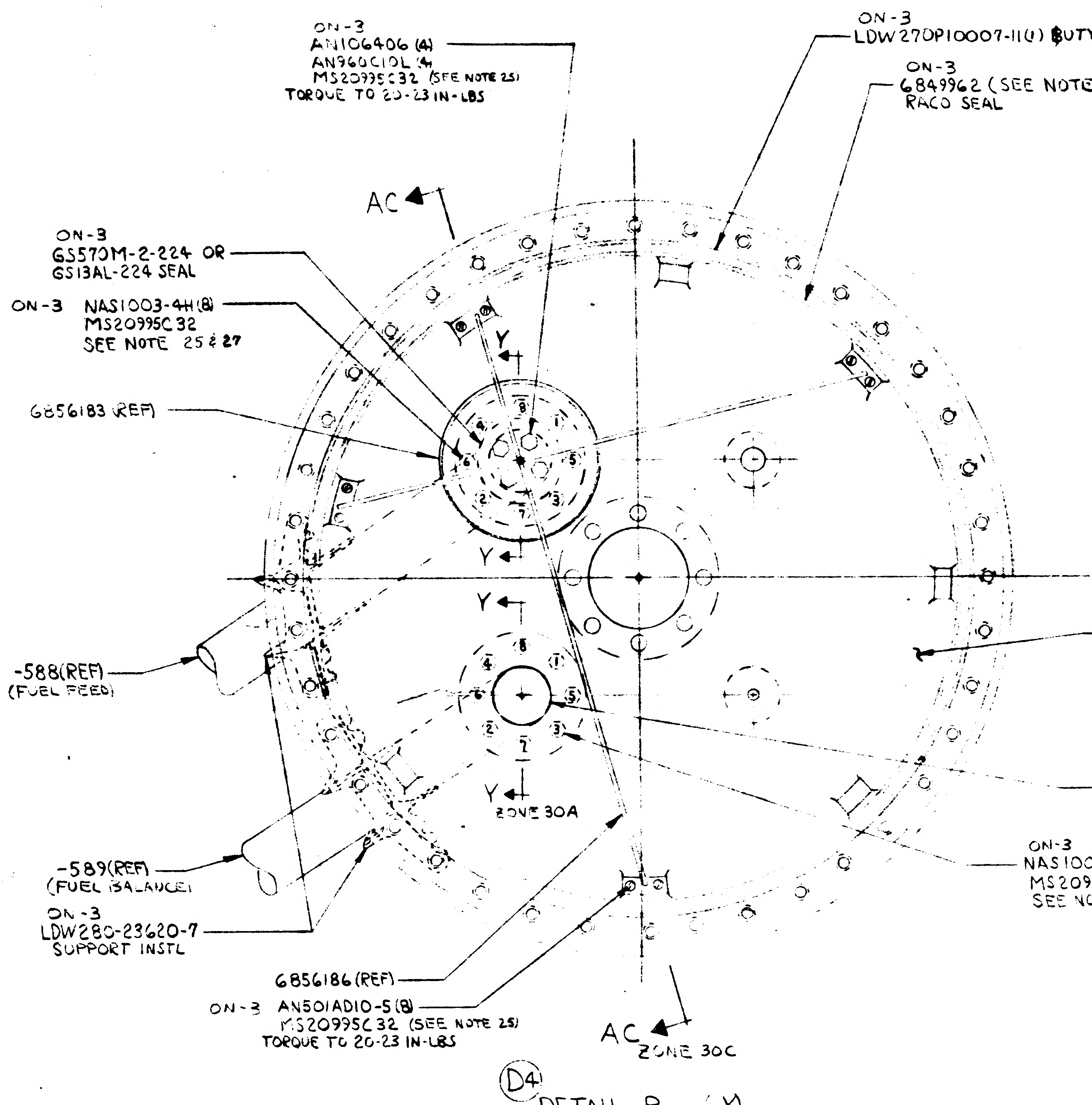
ON-3
AN106406 (4)
AN960C10L (4)
MS20995C32 (SEE NOTE 25)
TORQUE TO 20-23 IN-LBS
ON-3
LDW270P10007-11(1) BUTYL SEAL
ON-3
6849962 (SEE NOTE 30)
RACO SEAL
AC
ON-3
GS570M-2-224 OR
GS13AL-224 SEAL
ON-3 NAS1003-4H(8)
MS20995C32
SEE NOTE 25 & 27
6856183 (REF)
Y
Y
Y
Y
ZONE 30A
-588(REF)
(FUEL FEED)
ON-3
LDW280M15566-14 COVER (-Y)
ON-3
GS570M-2-224 OR
GS13AL-224 SEAL
ON-3
NAS1003-4H(8)
MS20995C32
SEE NOTES 25 & 27
-589(REF)
(FUEL BALANCE)
ON-3
LDW280-23620-7
SUPPORT INSTL
6856186(REF)
ON-3 AN501AD10-5(8)
MS20995C32 (SEE NOTE 25)
TORQUE TO 20-23 IN-LBS
AC
ZONE 30C

(D4) DETAIL R (-Y)
(VIEW LOOKING DOWN)
(SH 5.00 ZONE 14C)

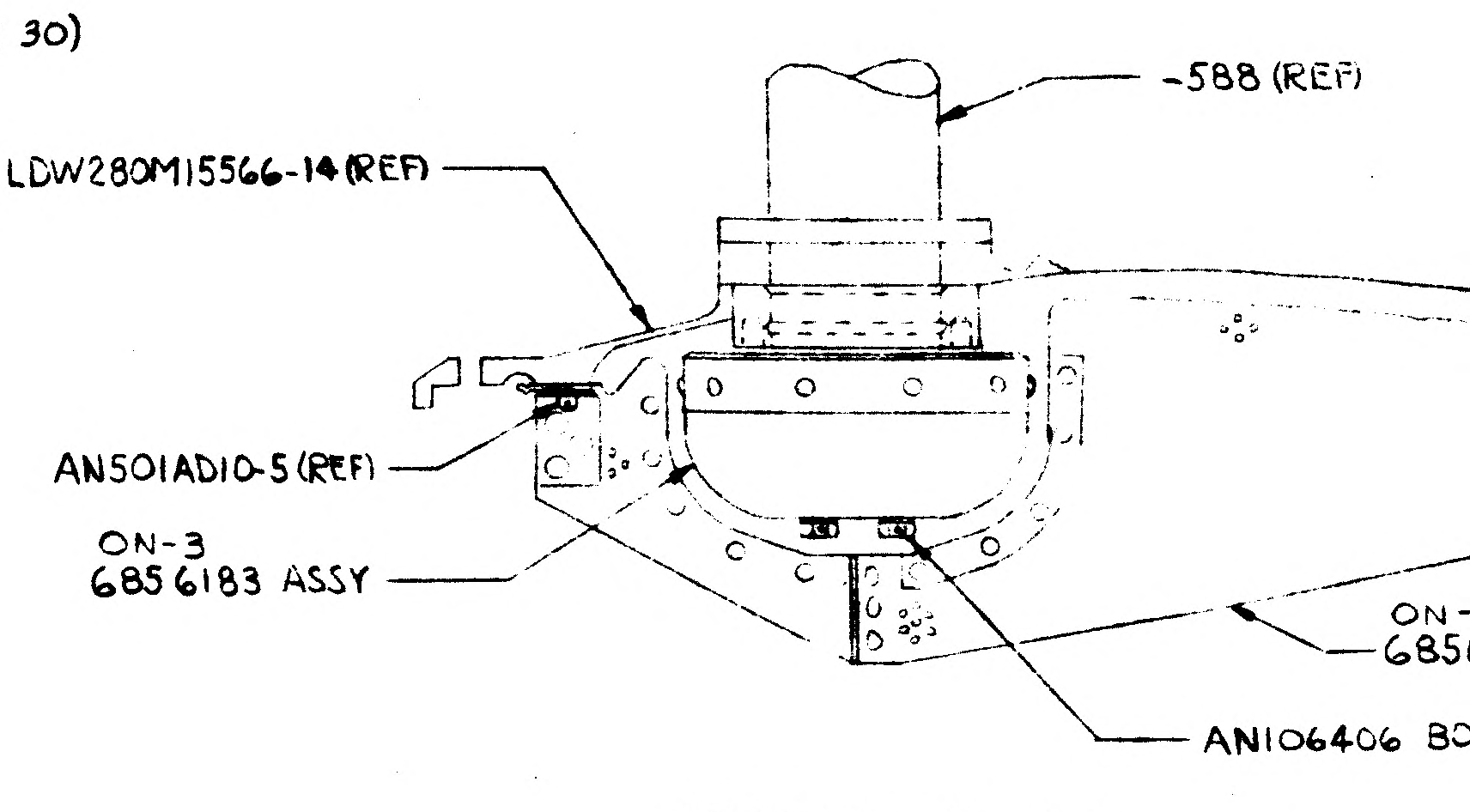
-588 (REF)
LDW280M15566-14(REF)
AN501AD10-5(REF)
ON-3
6856183 ASSY
ON-
685
AN106406 BO

SECTION AC-AC
(ZONE 31B)

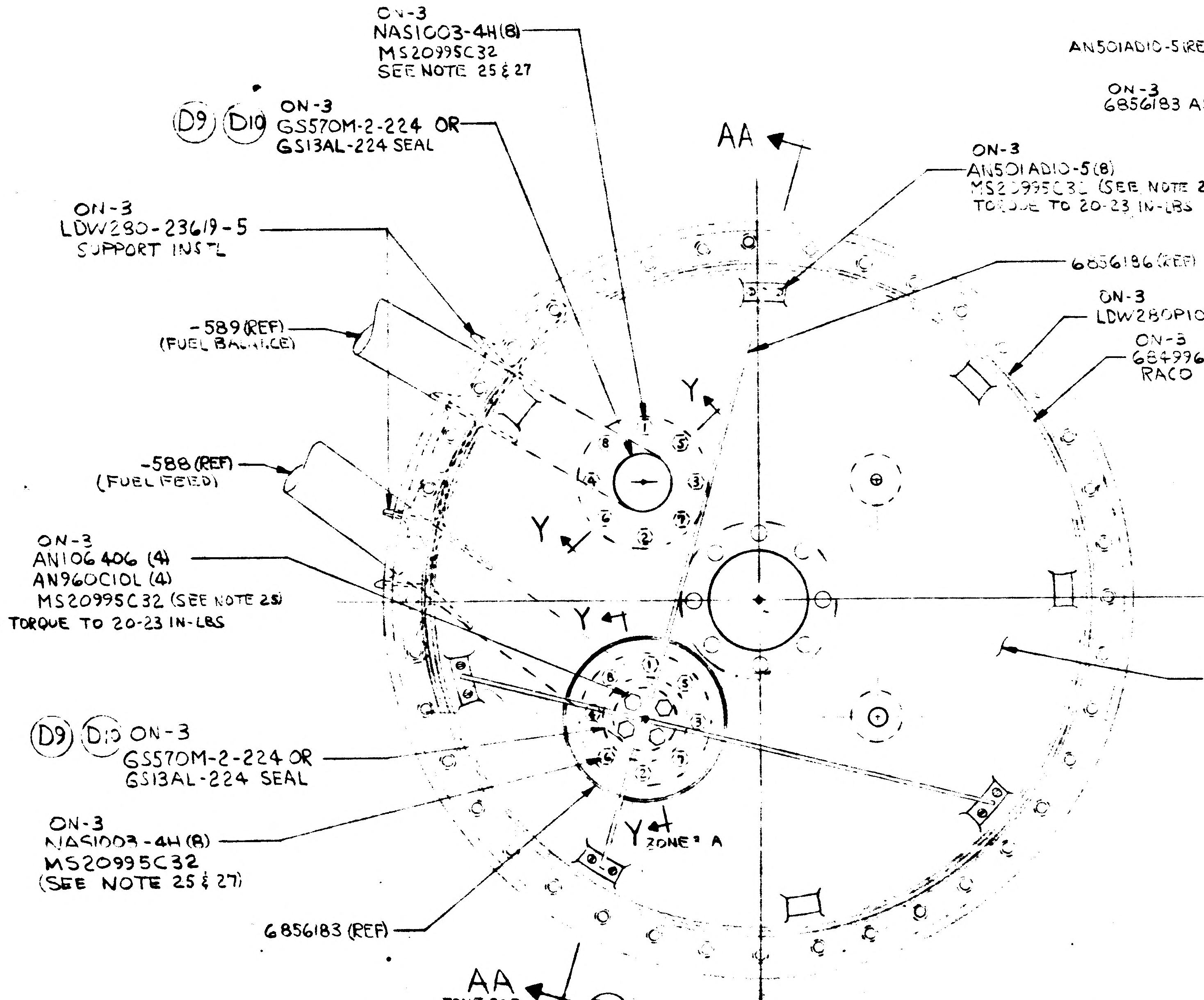
ON-3
NAS1003-4H(8)
MS20995C32
SEE NOTE 25 & 27
(D9) (D10) ON-3
GS570M-2-224 OR
GS13AL-224 SEAL
AA
ON-3
AN501AD10-5(8)
MS20995C32 (SEE NOTE 25)
TORQUE TO 20-23 IN-LBS
ON-3
LDW280-23619-5
SUPPORT INSTL
6856186 (REF)
ON-3
LDW280P1007-11(1) BUTYL SEAL
ON-3
6849962(1) (SEE NOTE 30)
RACO SEAL
-589 (REF)
(FUEL BALANCE)
Y
-588 (REF)
(FUEL FEED)
Y
ON-3
AN106406 (4)
AN960C10L (4)
MS20995C32 (SEE NOTE 25)
TORQUE TO 20-23 IN-LBS
Y
(D9) (D10) ON-3
GS570M-2-224 OR
GS13AL-224 SEAL
ON-3
LDW280M15566-13 COVER (+Y) (D7) (D10)
ON-3
NAS1003-4H (8)
MS20995C32
(SEE NOTE 25 & 27)
Y
ZONE 31A
6856183 (REF)
AA
ZONE 30B

(D4) DETAIL T (+Y)
VIEW LOOKING DOWN
(SH 5.00 ZONE 14A)

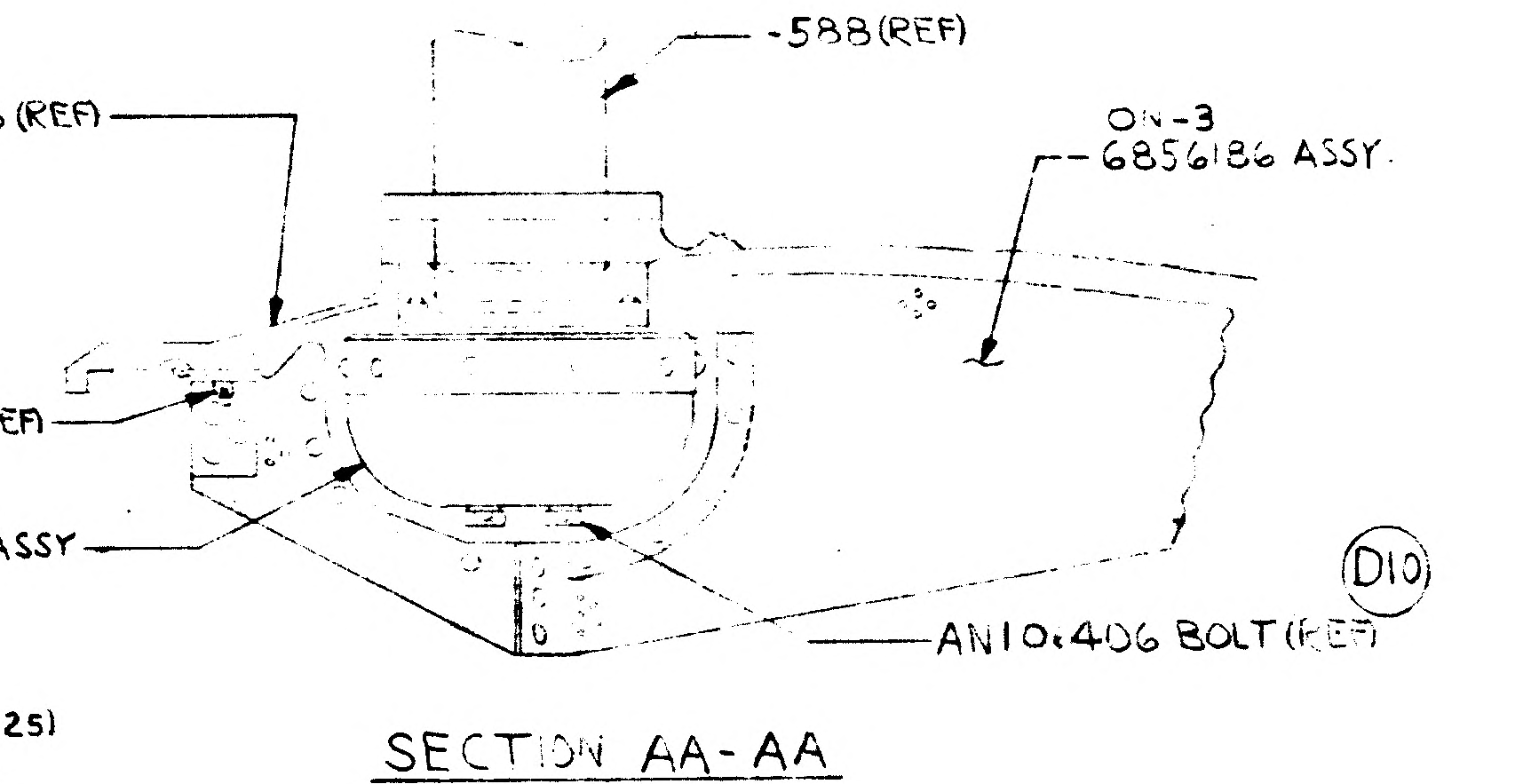
-588 (REF)
ON-3
6856186 ASSY
LDW280M15566-13 (REF)
AN501AD10-5(REF)
ON-3
6856183 ASSY
(D10)
AN106406 BOLT (REF)

SECTION AA-AA
(ZONE 31A)

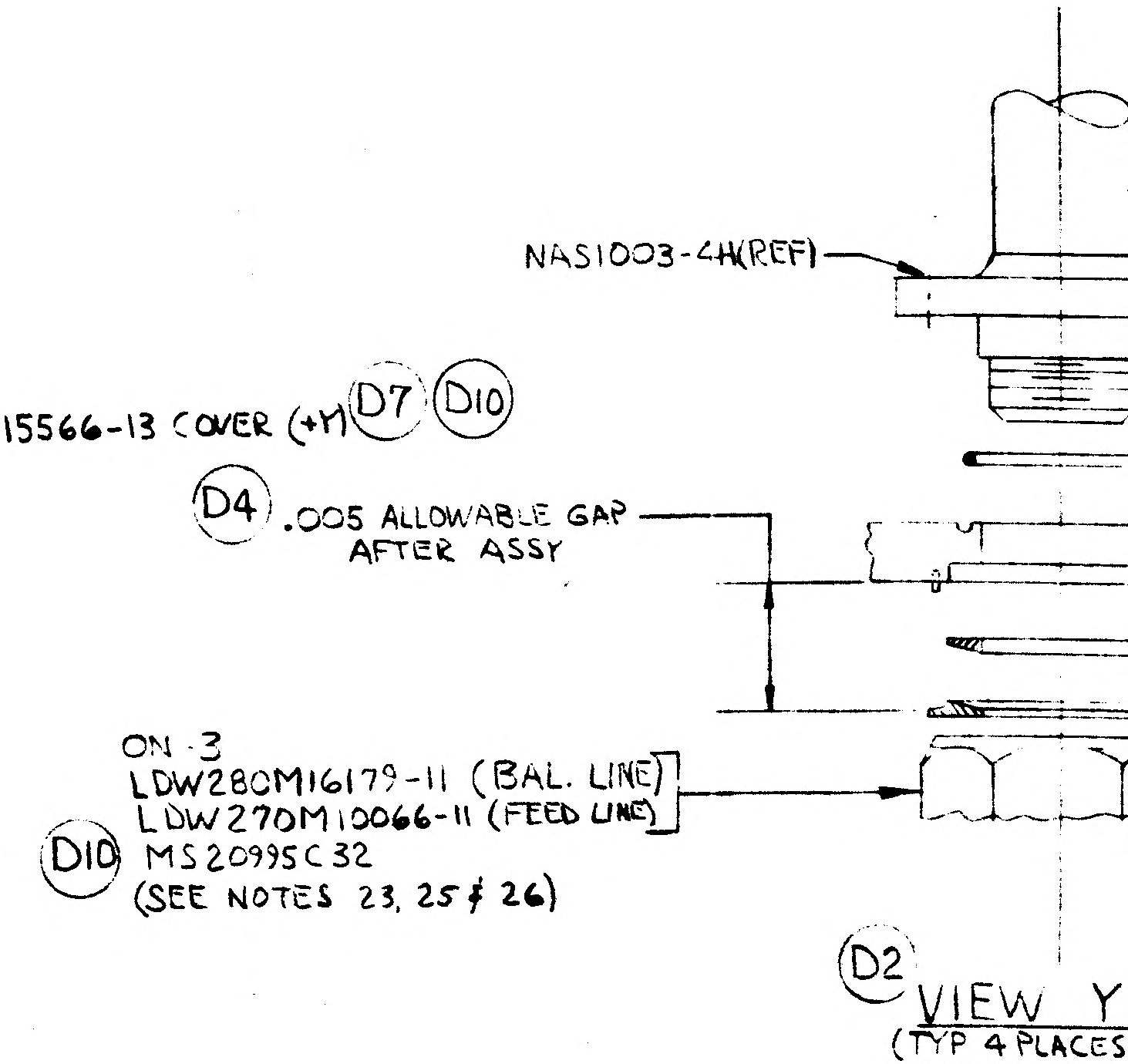
NAS1003-4H(REF)
(D4) .005 ALLOWABLE GAP
AFTER ASSY
ON-3
LDW280M16179-11 (BAL. LINE)
LDW270M10066-11 (FEED LINE)
(D10) MS20995C32
(SEE NOTES 23, 25 & 26)

(D2) VIEW Y
(TYP 4 PLACES
(ZONE 31A & 3

TYPICAL SECT THRO
FUEL +Y, -

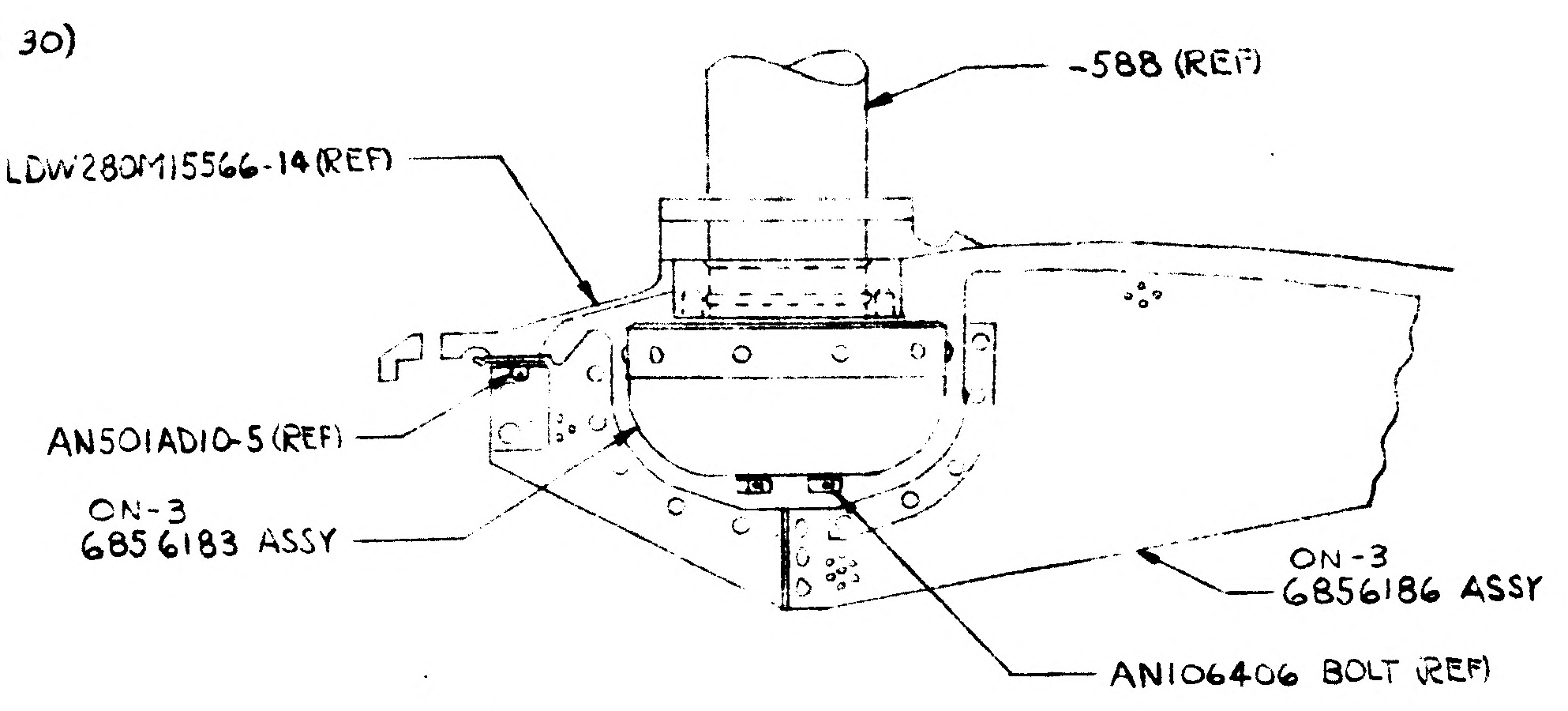
-588 (REF)
LDW280M15566-14 (REF)
AN501ADIO-5 (REF)
ON-3
6856183 ASSY
ON-3
6856186 ASSY
AN106406 BOLT (REF)

SECTION AC-AC
(ZONE 31B)

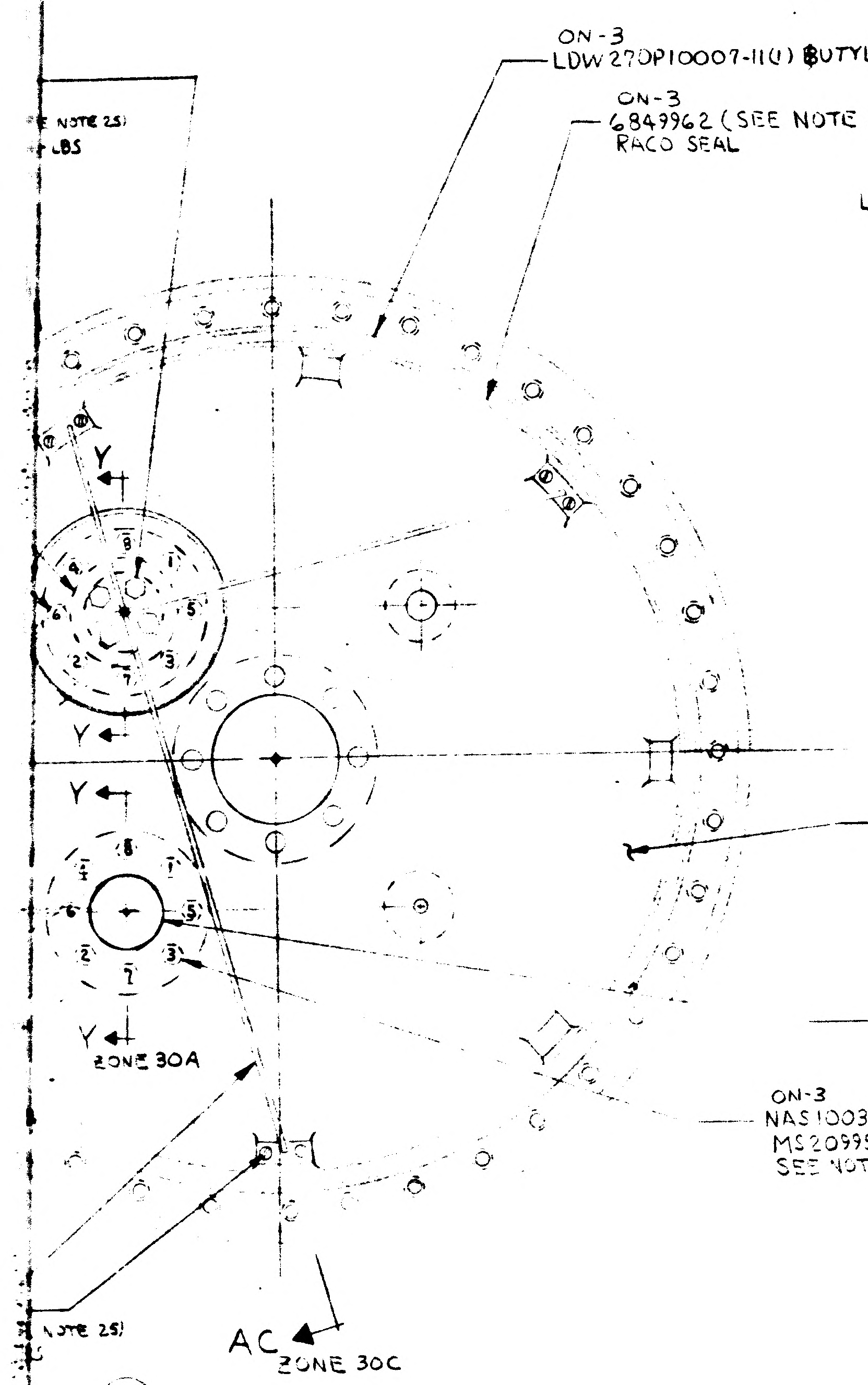
ON-3
LDW270P10007-11(1) BUTYL SEAL
ON-3
6849962 (SEE NOTE 30)
RACO SEAL
NOTE 25)
LBS
Y
Y
Y
Y
ZONE 30A
ON-3
LDW280M15566-14 COVER (-Y)
ON-3
GS570M-2-224 OR
GS13AL-224 SEAL
ON-3
NAS1003-4H(8)
MS20995C32
SEE NOTES 25 & 27
NOTE 25)
AC
ZONE 30C

(D4) DETAIL R (-Y)
(VIEW LOOKING DOWN)
(SH 5.00 ZONE 4C)

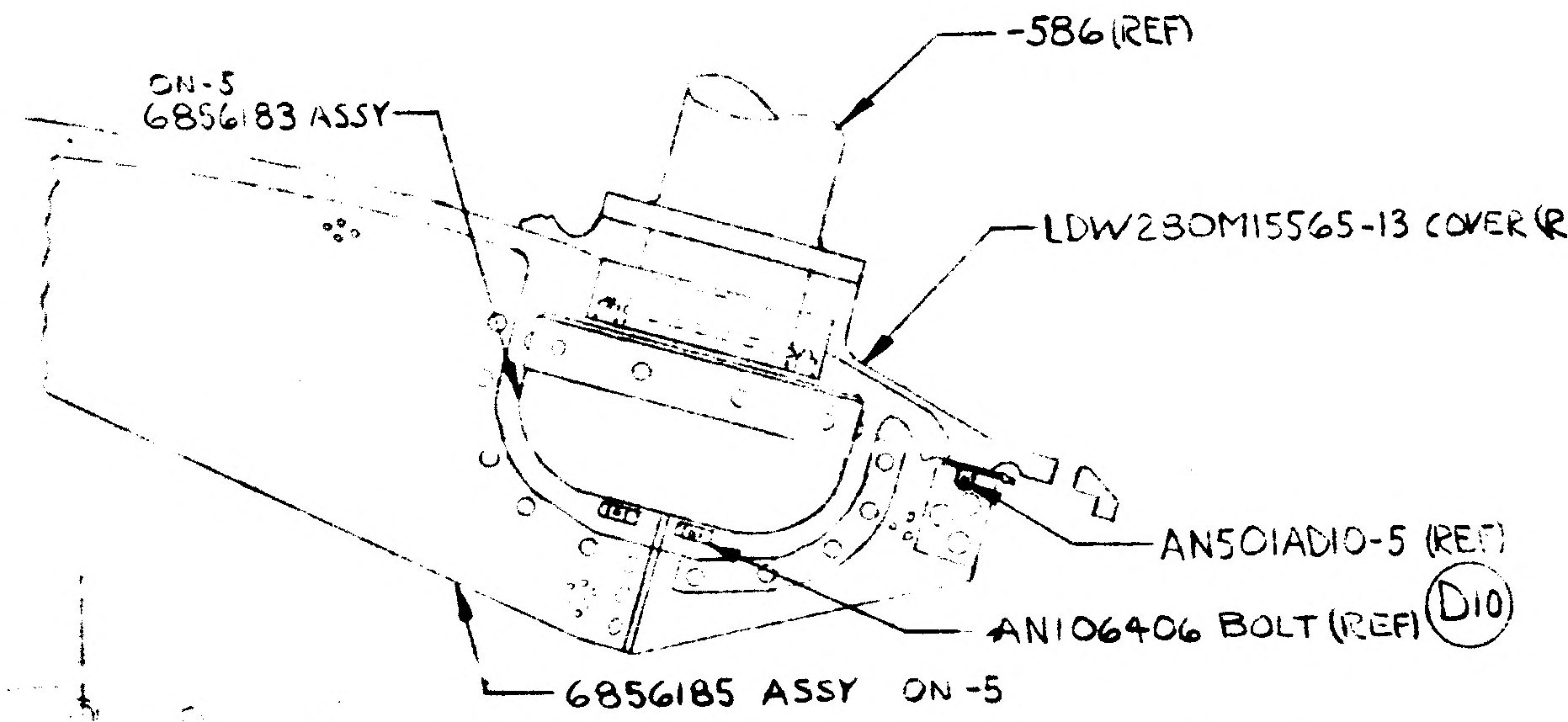
ON-5
6856183 ASSY
-586 (REF)
LDW280M15565-13 COVER (REF)
AN501ADIO-5 (REF)
AN106406 BOLT (REF) (D10)
6856185 ASSY ON-5

SECTION AB-AB
(ZONE 29B)

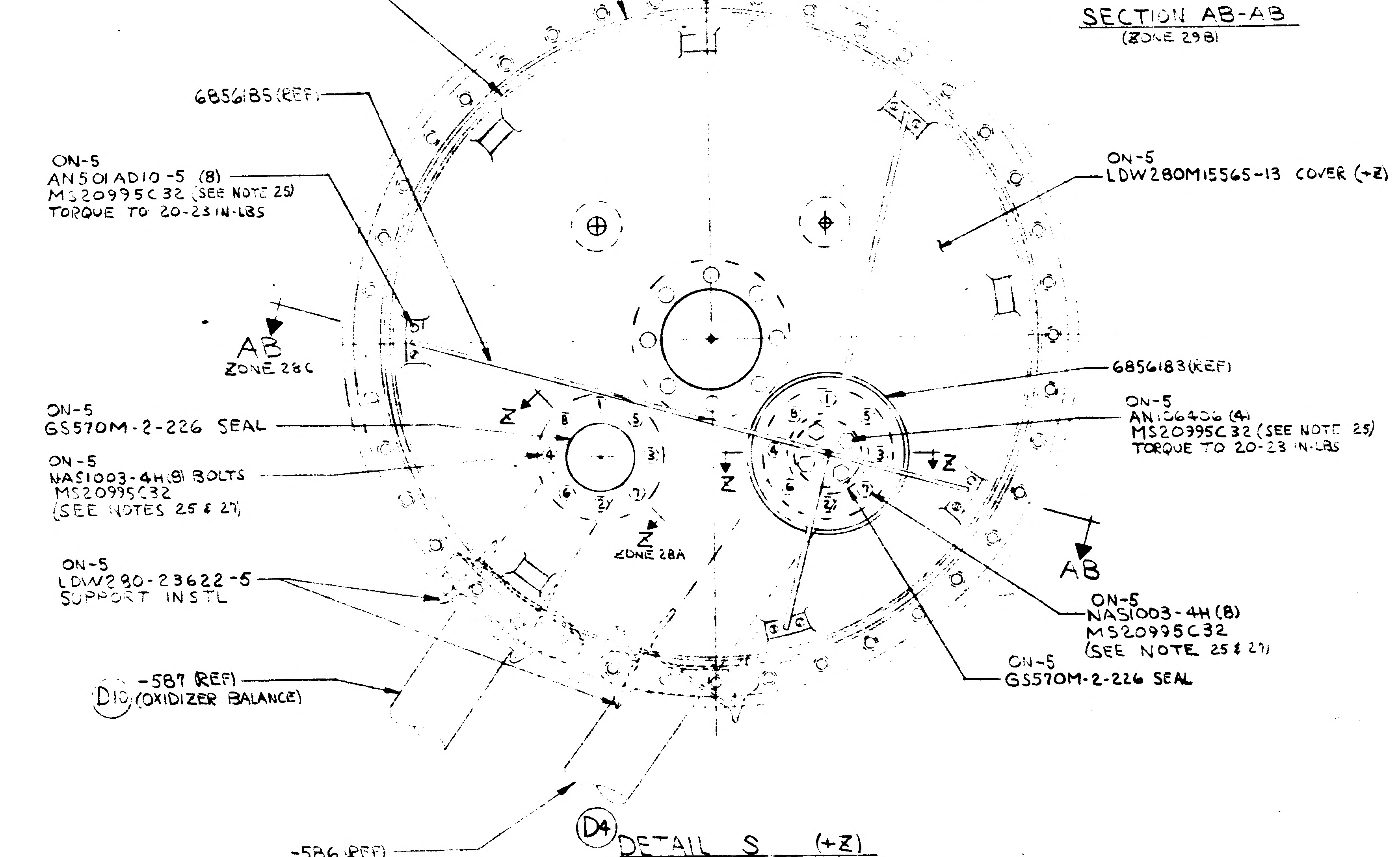
ON-5
LDW270P1007-11(1) BUTYL SEAL
ON-5
6849962(1) (SEE NOTE 30)
RACO SEAL
6856185 (REF)
ON-5
AN501ADIO-5 (8)
MS20995C32 (SEE NOTE 25)
TORQUE TO 20-23 IN-LBS
AB
ZONE 28C
ON-5
GS570M-2-226 SEAL
ON-5
NAS1003-4H(8) BOLTS
MS20995C32
(SEE NOTES 25 & 27)
ON-5
LDW280-23622-5
SUPPORT INSTL
(D10) -587 (REF)
(OXIDIZER BALANCE)
Z
Z
Z
ZONE 28A
+Z
ON-5
LDW280M15565-13 COVER (+Z)
6856183 (REF)
ON-5
AN106406 (4)
MS20995C32 (SEE NOTE 25)
TORQUE TO 20-23 IN-LBS
AB
ON-5
NAS1003-4H (8)
MS20995C32
(SEE NOTE 25 & 27)
ON-5
GS570M-2-226 SEAL
-586 (REF)
(D10) (OXIDIZER FEED)

(D4) DETAIL S (+Z)
VIEW LOOKING DOWN
(SH5.00 ZONE 13B)

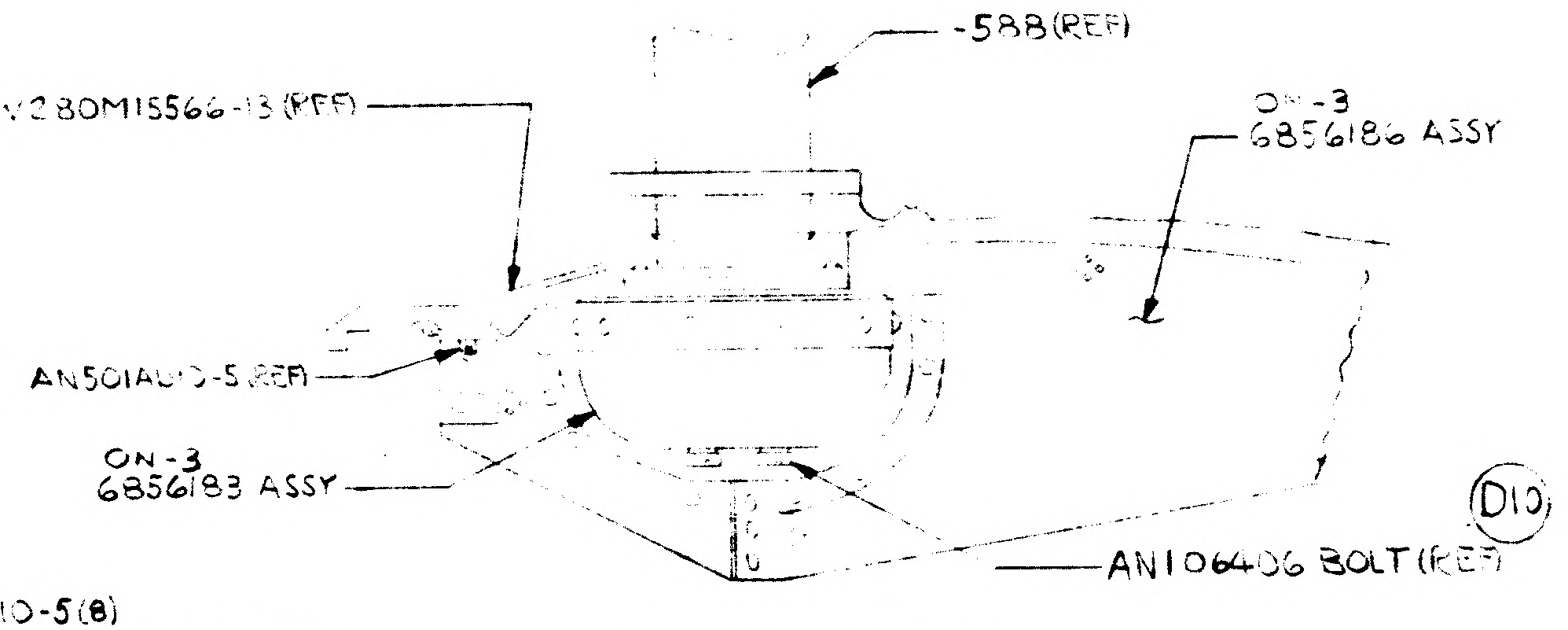
-588 (REF)
LDW280M15566-13 (REF)
ON-3
6856186 ASSY
AN501ADIO-5 (REF)
ON-3
6856183 ASSY
(D10)
AN106406 BOLT (REF)

SECTION AA-AA
(ZONE 31A)

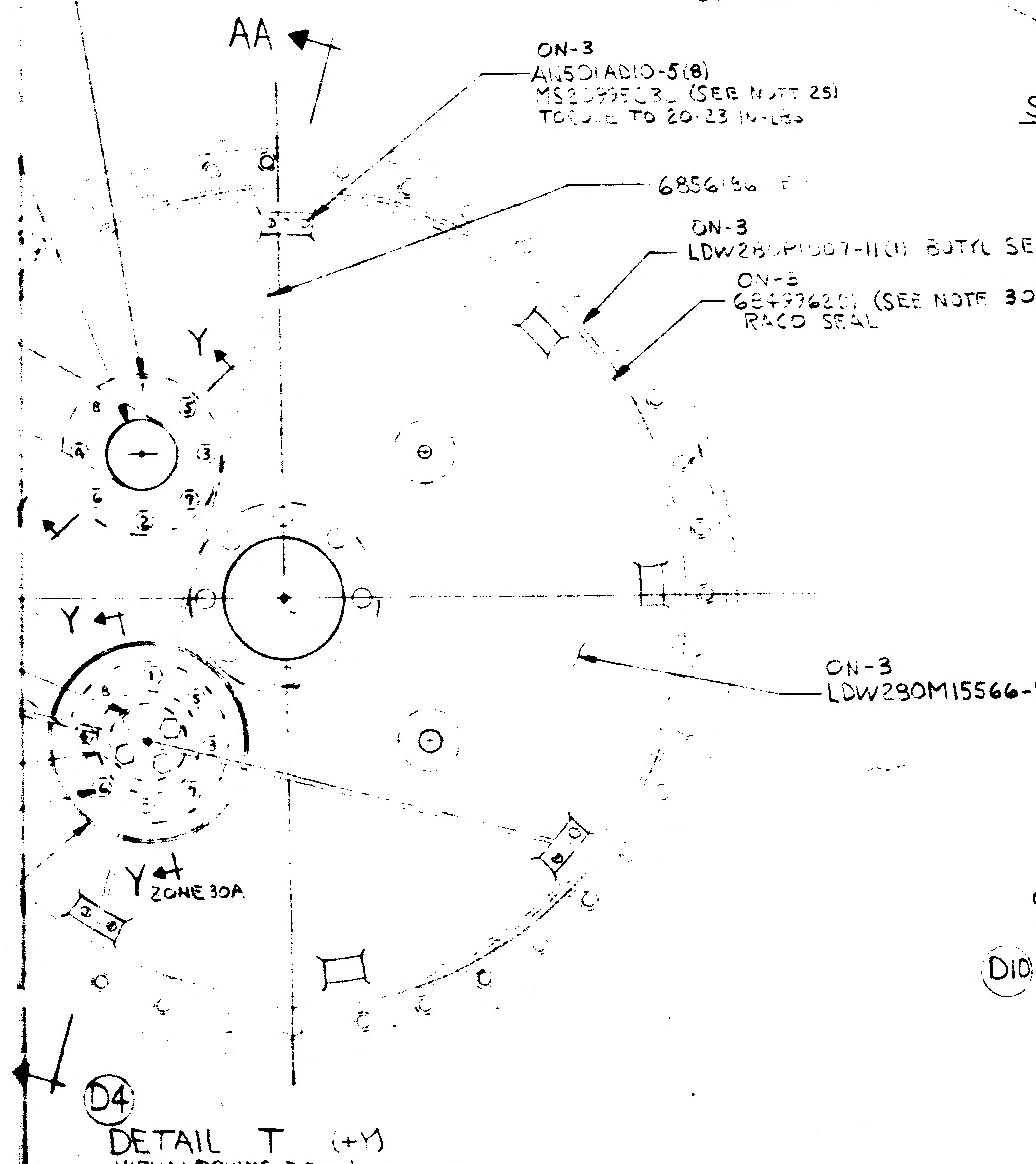
AA
ON-3
AN501ADIO-5 (8)
MS20995C32 (SEE NOTE 25)
TORQUE TO 20-23 IN-LBS
6856186 (REF)
ON-3
LDW280P1007-11(1) BUTYL SEAL
ON-3
6849962(1) (SEE NOTE 30)
RACO SEAL
Y
Y
Y
ZONE 30A
ON-3
LDW280M15566-13 COVER (+Y) (D7) (D10)

(D4) DETAIL T (+Y)
VIEW LOOKING DOWN
(SH5.00 ZONE 14A)

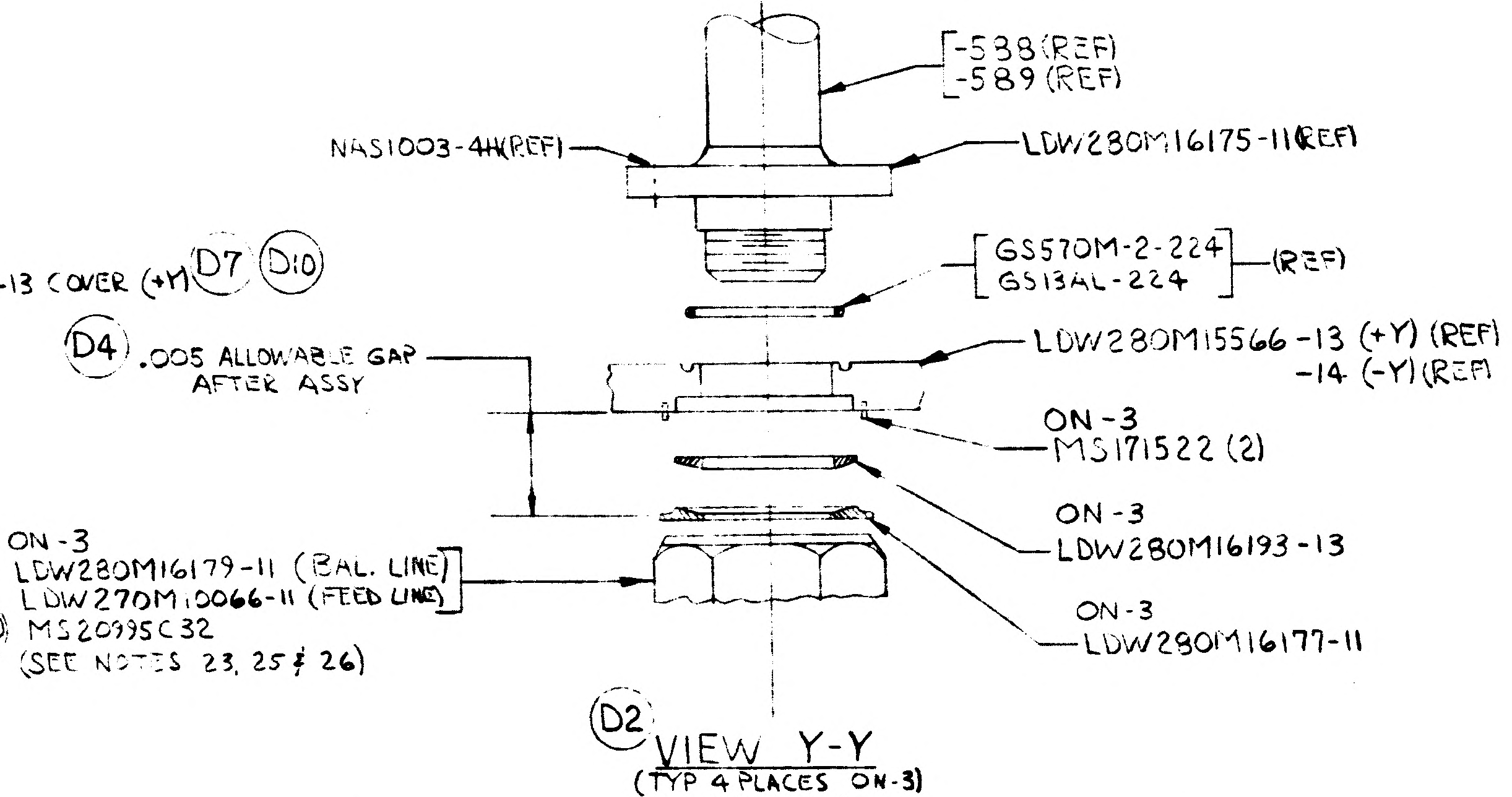
-588 (REF)
-589 (REF)
NAS1003-4H (REF)
LDW280M16175-11 (REF)
GS570M-2-224
GS13AL-224
(REF)
(D4) .005 ALLOWABLE GAP
AFTER ASSY
LDW280M15566-13 (+Y) (REF)
-14 (-Y) (REF)
ON-3
MS171522 (2)
ON-3
LDW280M16193-13
ON-3
LDW280M16179-11 (BAL. LINE)
LDW270M10066-11 (FEED LINE)
(D10) MS20995C32
(SEE NOTES 23, 25 & 26)
ON-3
LDW280M16177-11

(D2) VIEW Y-Y
(TYP 4 PLACES ON-3)
(ZONE 31A & 31C)

TYPICAL SECT THROUGH FEED & BALANCE LINES
FUEL +Y, -Y TANK BAYS

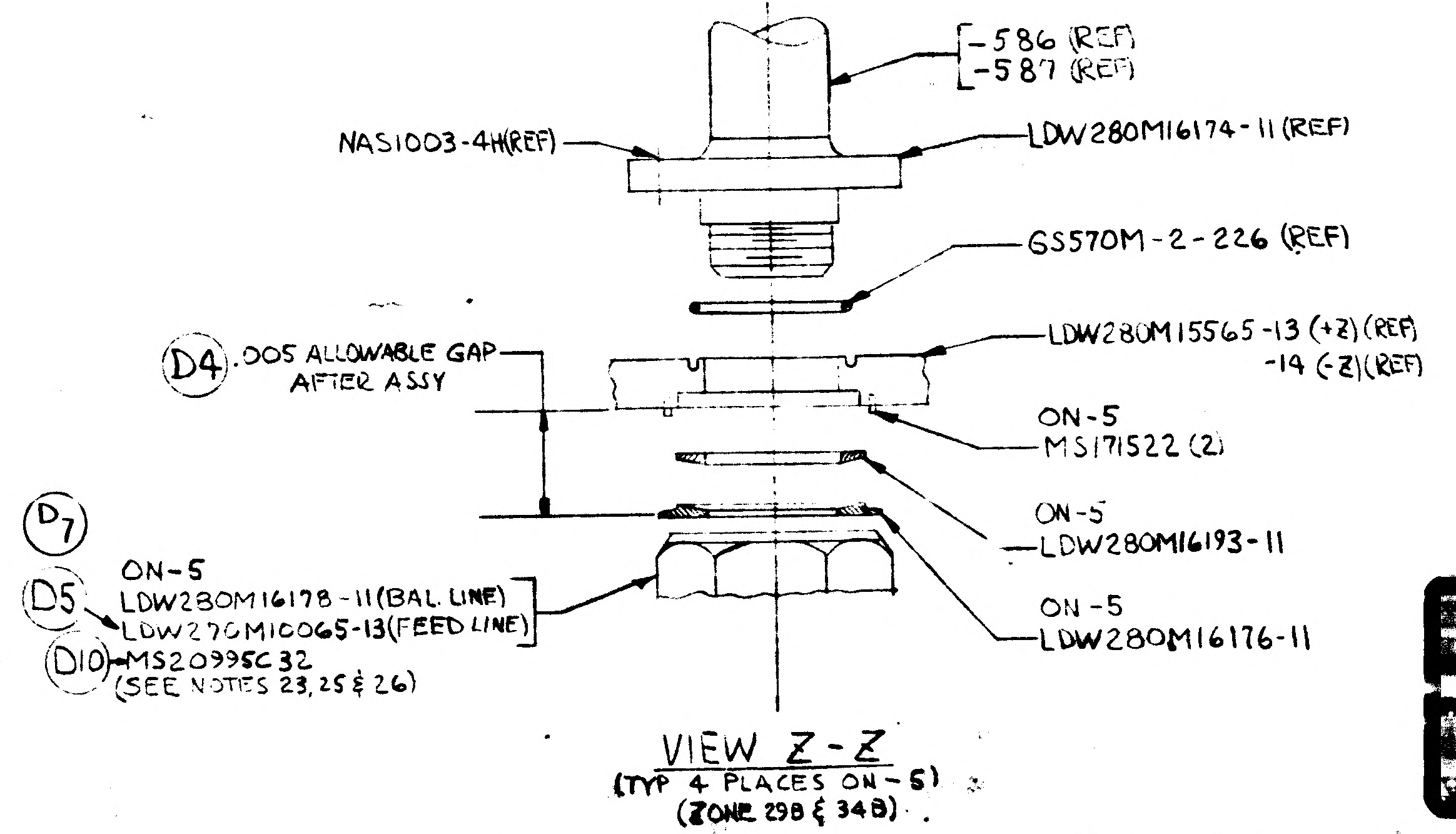
-586 (REF)
-587 (REF)
NAS1003-4H (REF)
LDW280M16174-11 (REF)
GS570M-2-226 (REF)
(D4) .005 ALLOWABLE GAP
AFTER ASSY
LDW280M15565-13 (+Z) (REF)
-14 (-Z) (REF)
ON-5
MS171522 (2)
ON-5
LDW280M16193-11
(D7)
(D5)
ON-5
LDW280M16178-11 (BAL. LINE)
LDW270M10065-13 (FEED LINE)
(D10) MS20995C32
(SEE NOTES 23, 25 & 26)
ON-5
LDW280M16176-11

VIEW Z-Z
(TYP 4 PLACES ON-5)
(ZONE 29B & 34B)

TYPICAL SECT THROUGH FEED & BALANCE LINES
OXIDIZER +Z, -Z TANK BAYS

MANUFACTURING OPERATIONS
UNLESS OTHERWISE SPECIFIED
NOTES CHECKED √ APPLY TO THIS DWG.

PART NUMBER AND ALL OTHER MARKINGS IN REGION MARKED ☒ USE BOTH SIDES IF NECESSARY.

FILLET AND INSIDE CORNER RADII TOLERANCES
.016R TO .062R ± .010
.063R TO .250R ± .015
OVER .250R ± .030

DEPTH SHOWN FOR TAPPED HOLES IS FULL THDS. 2-3 IMP THDS. BEYOND PERMISSIBLE.

EXTERNAL THREAD LENGTH SHOWN INCLUDES 2 IMPERFECT THREADS MAX.

DO NOT CADMIUM PLATE & PAINT HOLES OR SURFACES MARKED WITH DOUBLE ASTERISK.

MISMATCH STEP OF ± .005 PERMISSIBLE DUE TO CHANGE OF CUTTERS AT INSIDE INTERSECTING SURFACES.

DIAMETERS MARKED MUST BE CONCENTRIC WITHIN FULL INDICATOR READING

HOLES MUST BE KEPT FREE OF CHROME PLATING SOLUTION.

ALL DIMENSIONS SHOWN TO BE MET AFTER CADMIUM PLATING. THICKNESS OF PLATE .0003 MIN. TO .0005 MAX. MIN. THICKNESS TO BE .0002 ON THREADED AREAS. NO ALLOWANCE FOR PLATING IN HOLES

125 SURFACE ROUGHNESS INCLUDING REAMED HOLES PER MIL-STD-10

200 FOR ALL DRILLED HOLES

REMOVE ALL BURRS. BREAK ALL EDGES .015-.031

INSPECTION INFORMATION MINIMUM PERMISSIBLE AVERAGE EDGE DISTANCE MARKED IS

SYMBOL √ DENOTES SURFACE TO BE MACHINED

UNLESS OTHERWISE SPECIFIED TOLERANCE ON FLANGES IS ± 1/32

LENGTHS OF AN, NAS & MS AL ALY RIVETS SHORTER THAN 1 INCH ARE NOT SPECIFIED.

TOLERANCE ON LOFTED DELINEATIONS IS

DWG SIZE 34 X 77.5

PRINTING INFO ONLY
FULL SIZE SHEET AREA (36 X 87.5)= 21.8 SQ. FT.
1/2 SIZE SHEET AREA (1/4 OF FULL)= 5.45 SQ. FT.

PRINT TRIM LINE

C
B
A

LDW280-51608 D

LDW280-51608 D

02/02

NAS 9-1100

GRUMMAN AIRCRAFT ENGRG CORP., BETHPAGE, L. I., NEW YORK

LM	SIZE J	CODE IDENT NO. 26512	LDW280-51608	D
MODEL OR END ITEM	SCALE NONE		SHEET 7.00	

THIS IS AN ORIGINAL DRAWING

ENG 22.2 REV 3-66

GRUMMAN AIRCRAFT ENGINEERING CORP.
CODE IDENT NO. 26512
ENGINEERING ORDER

DWG. NO. LDW280-51608		EO NO. A1	
CONTROL INFO NO. LDW280-A-0025			

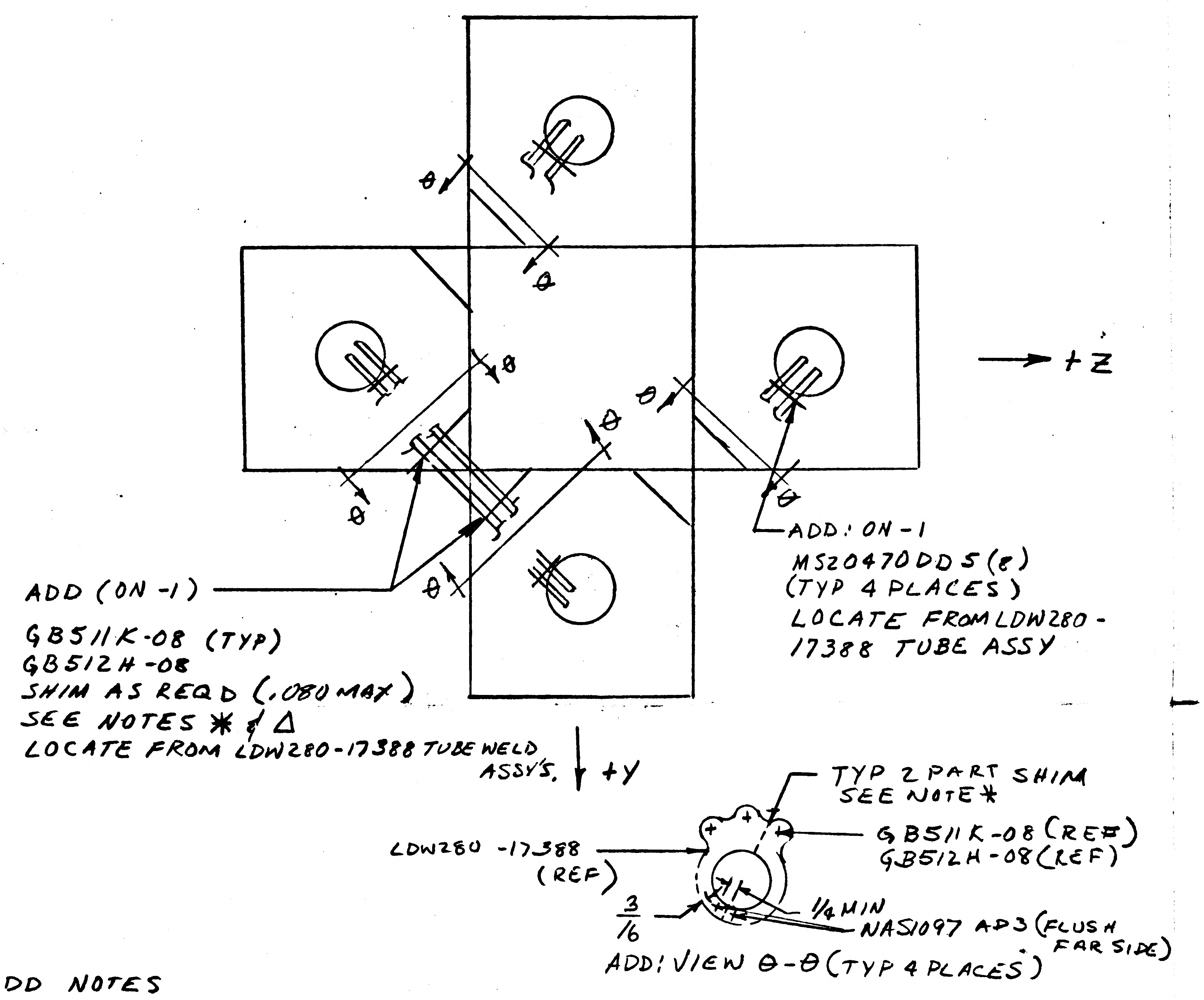

θ
θ
θ
θ
θ
θ
θ
θ
→ +Z
ADD: ON-1
MS20470DD5 (8)
(TYP 4 PLACES)
LOCATE FROM LDW280-17388 TUBE ASSY
ADD (ON-1)
GB511K-08 (TYP)
GB512H-08
SHIM AS REQD (.080 MAX)
SEE NOTES ✱ & Δ
LOCATE FROM LDW280-17388 TUBE WELD ASSY'S.
↓ +Y
TYP 2 PART SHIM
SEE NOTE ✱
GB511K-08 (REF)
GB512H-08 (REF)
LDW280-17388 (REF)
3/16
1/4 MIN
NAS1097 AD3 (FLUSH FAR SIDE)
ADD: VIEW θ-θ (TYP 4 PLACES)

ADD NOTES

✱ - SHIM AS REQD USING 2024-T3 AL ALY SH, QQ-A-250/4, FIN 88
SHIM TO MATCH CONTOUR WITHIN ± 1/16 OF LDW280-17388 PLATES.

Δ - GB511K-08 GRIP LENTHS SHALL BE DETERMINED, AS REQ'D ON INSTL

α - INSTALL FASTENER PER LSP-14-15306

θ-✱-Δα- USE NEXT AVAILABLE NUMBER

2✓

DETAIL SPEC REQ		CL II ENGRG CHG		CL I ENGRG CHG	

REASON FOR EO	DESCRIPTION OF EO	GAEC EO RELEASE
ADD ATTACHING HDWARE & SHIMS FOR ATTACHMENT OF TUBE ASSY'S TO SUPT STRUCT	ON-1 ADDED MS20470DD5 (32), GB511K-08 & NOTES ✱, Δ & α ADDED VIEW θ-θ & NAS1097AD3 (8)	C 9-21

MODEL	EFFECTIVITY: PROCURING ACTIVITY NO.	GAEC UNIT NO.	SUB CONTR UNIT NO.
LM		LEM 1 (31)	

DRAWING CHANGE REQD: REVISE DWG	RECORD EO	DISPOSITION OF PARTS: REWORK	SCRAP
✓		✓	

APPROVED BY	WT	LBY			WJ		EMS (WE)	
DATE	9/6/66	9/26/66			9/13/66		10-10-66	
✓	VDI	~~SUPPORT~~ UTS	RELIAB. GROUP	GROUP LEADER	STRESS GROUP	LIAISON ENGRG	PROJ ENGRG	~~XXX~~

PRIORITY	DRAWING TITLE	DRAWING NO.	EO NO.
C	LINES INSTL - PROP & PRESSURE SYS - DES. STAGE	LDW280-51608	A1

ISSUED BY D KAGAS SECTION VD1 GROUP NO. 335 PL 5

01

NAS 9-1100

ENG 32.2 REV 3-65

*

GRUMMAN AIRCRAFT ENGINEERING CORP.

CODE IDENT NO. 26512

ENGINEERING ORDER

DWG. NO. LDW280-51608

EO NO. A2

CONTROL INFO NO. LM-5-9156

IN GENERAL NOTES ADD NOTE ** AS FOLLOWS:

NOTE ** "CONDUCT A 50PSIG GASEOUS LEAK CHECK TO VERIFY INTEGRITY OF PROPULSION SYSTEM AS FOLLOWS:

a) INSTALL A 0-100 PSI GAGE & SHUT-OFF VALVE UPSTREAM OF THE LSC270-805-1 OXIDIZER FILL VENT DISCONNECT COUPLING & CONNECT TO A HELIUM SUPPLY SOURCE (SEE SKETCH OF TEST SET-UP BELOW)

b) OPEN SUPPLY VALVE UNTIL PRESSURE IN OXIDIZER SIDE OF SYSTEM READS 50PSI. CLOSE SHUT-OFF VALVE & MONITOR GAGE TO ASSURE THERE IS NO PRESSURE DECAY FOR A PERIOD OF 30 MINUTES.

c) AFTER SUCCESSFUL COMPLETION OF THE PRESSURE DECAY TEST ON SYSTEM OXIDIZER SIDE, CONNECT GAGE AND SHUT-OFF VALVE UPSTREAM OF THE LSC270-804-1 FUEL FILL VENT DISCONNECT COUPLING AND REPEAT STEPS a) & b) ABOVE ON THE PROPULSION SYSTEM FUEL SIDE.

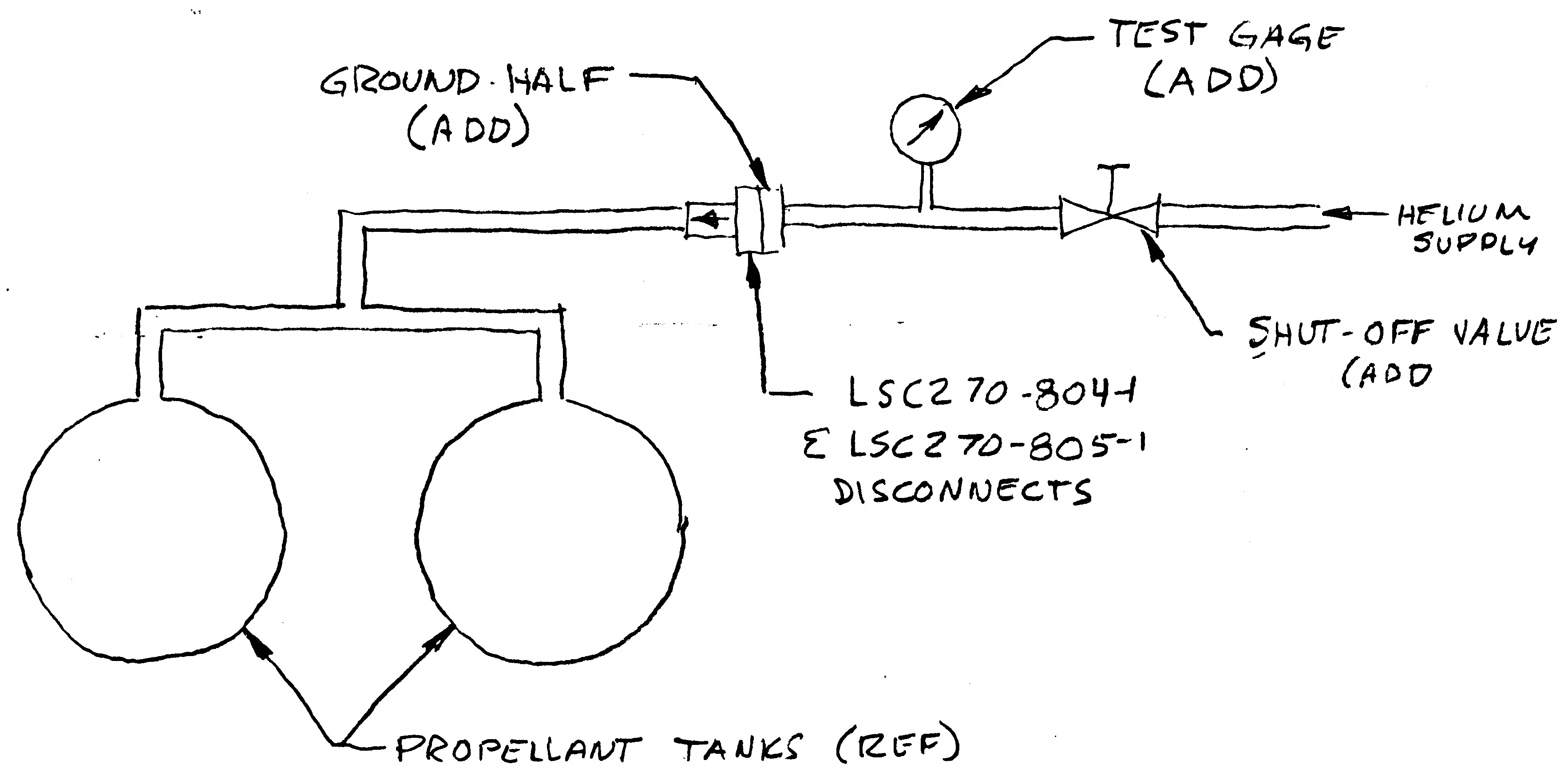

** USE NEXT AVAILABLE NOTE NO.

DETAIL SPEC REQ ☐	CL II ENGRG CHG ☐	CL I ENGRG CHG ☐											5
REASON FOR EO TO CONDUCT 50PSIG GASEOUS LEAK CHECK			DESCRIPTION OF EO ADDED NOTE **										① GAEC & EO RELEASE CE
MODEL	EFFECTIVITY			DRAWING CHANGE REQD		DISPOSITION OF PARTS		APPROVED BY	WT	AR		JFJ	CH
	PROCURING ACTIVITY NO.	GAEC UNIT NO.	SUB CONTR UNIT NO.	✓ REVISE DWG	RECORD EO	✓ REWORK	SCRAP	DATE	9/26/66	10-4		9-29-66	9-26-66
CM		LM-1 (31)							VDI	SUPPORT WJ	RELIAB. GROUP	GROUP LEADER	STRESS GROUP
				PRIORITY C	DRAWING TITLE LINES INSTL. PROPULSION & PRESSURIZATION SYSTEM D/S					DRAWING NO. LDW280-51608			

LIAISON ENGRG	PROJ ENGRG	~~GOVT~~	EO NO.
9-26-66	9-30-66	9-29-66	A2

ISSUED BY AMBEDSIO SECTION VDI GROUP NO. 335 PL 35

01

NAS 9-1100

ENG 32.1 REV 3-65

GRUMMAN AIRCRAFT ENGINEERING CORP.
CODE IDENT NO. 26512
ENGINEERING ORDER

DWG. NO. LDW280-51608
EO NO. A4
CONTROL INFO NO. LM-5-9495

ON -1 INSTL.
IN ZONE 15A SH 5 ON INSTL OF LDW280-16026-1
(VENT RELIEF) REMOVE MS20470DD3
AND REPLACE WITH MS20470AD3

DETAIL SPEC REQ		CL II ENGRG CHG		CL I ENGRG CHG		√

REASON FOR EO: EASE OF MANUFACTURE

DESCRIPTION OF EO: -1 INSTL FOR INSTL. OF LDW280-16026-1 MS20470AD3 WAS MS20470DD3

GAEC C EO RELEASE: FR

MODEL	EFFECTIVITY		
	PROCURING ACTIVITY NO.	GAEC UNIT NO.	SUB CONTR UNIT NO.
LM		LM-1(31)	

DRAWING CHANGE REQD		DISPOSITION OF PARTS	
✓		✓	
REVISE DWG	RECORD EO	REWORK	SCRAP

APPROVED BY	WT			~	HC	CH	RMC	
DATE	11/1/66			~	11-1-66	11-3-66	11-7-66	11/[illegible]/66
3	VDI	SUPPORT	RELIAB. GROUP	GROUP LEADER	STRESS GROUP	LIAISON ENGRG	PROJ ENGRG	~~GOVT~~

PRIORITY	DRAWING TITLE	DRAWING NO.	EO NO.
C	LINES INSTL PROPULSION & PRESSURIZATION SYSTEM D/S	LDW280-51608	A4

ISSUED BY L. BALDASSIN (7033) SECTION EQUIP LINE GROUP NO. 332 PL 5

01

NAS 9-1100

ENG 32.1 REV 3 65

GRUMMAN AIRCRAFT ENGINEERING CORP.

CODE IDENT NO. 26512

ENGINEERING ORDER

DWG NO. LDW280-51608

EO NO. A5

CONTROL INFO NO. LDW280A-3152

-3 ASSEMBLY IN F/D & B/M

REMOVE	(1) LDW280-17388-363 V-12	TUBE
ADD	(1) LDW 280-17388-1503	ASSY
REMOVE	(2) LDW 280P16218 -1	PORT
ADD	(1) LDW 280P 16218 -11	PORT
	(1) LDW 280P 16218 -13	PORT

DETAIL SPEC REQ ☐ CL II ENGRG CHG ☒ CL I ENGRG CHG ☐ 5

REASON FOR EO: SUPPORT BRACKET REDESIGNED

DESCRIPTION OF EO: ON-3 ASSY IN F/D & B/M REMOVED LDW280-17388-363V-12 TUBE, (2) LDW280P16218-1 ADDED (1) LDW280-17388-1503 ASSY, (1) LDW280P16218-11, (1) LDW280P16218-13

GAEC EO RELEASE: FR 11/17/6

MODEL	EFFECTIVITY: PROCURING ACTIVITY NO.	GAEC UNIT NO	SUB CONTR UNIT NO
LM		LM-1(31)	

DRAWING CHANGE REQD: REVISE DWG ✓ RECORD EO

DISPOSITION OF PARTS: REWORK ✓ SCRAP ✓

APPROVED BY	JW	—	—	—	JH		RMC	
DATE	11/3/66				[illegible]		11-5-66	11/16/66
/	VD1	SUPPORT	RELIAB GROUP	GROUP LEADER	STRESS GROUP	LIAISON ENGRG	PROJ ENGRG	

PRIORITY: C

DRAWING TITLE: LINES INSTL. PROPULSION & PRESSURIZATION SYSTEM D/S

DRAWING NO: LDW280-51608

EO NO: A5

ISSUED BY HUGH RYAN X7033 SECTION VD1 (EQUIP LINES) GROUP NO. 332 PL. 35

ENG 32.1 REV 3-65

GRUMMAN AIRCRAFT ENGINEERING CORP.
CODE IDENT NO. 26512
ENGINEERING ORDER

DWG NO. LDW280-51608
EO NO. A6
CONTROL INFO NO. LM-5-9761

THIS IS A REVISION OF E.D. A5.

IN FLD. & DESCRIPTION -3 ASSY. S/B -1 INSTL.

DETAIL SPEC REQ ☐ CL II ENGRG CHG ☐ CL I ENGRG CHG ☐

5

REASON FOR EO: TO CORRECT DASH NO. CALLOUT. R.T.E. 05131-180

DESCRIPTION OF EO: IN FLD. & DESCRIPTION -1 INSTL. WAS -3 ASSY. REF. EOA5

GAEC EO RELEASE: K

MODEL	PROCURING ACTIVITY NO.	GAEC UNIT NO.	SUB CONTR UNIT NO.
LM		LM-1 (31)	

DRAWING CHANGE REQD		DISPOSITION OF PARTS	
REVISE DWG	RECORD EO	REWORK	SCRAP
✓		✓	

APPROVED BY						CH		
DATE	7/14/66					11-23	11-29-66	11-23-66
6	VDI	SUPPORT	RELIAB. GROUP	~~GROUP~~ LEADER	STRESS GROUP	LIAISON ENGRG	PROJ ENGRG	~~GOVT~~

PRIORITY: C
DRAWING TITLE: LINES INSTL. PROPULSION & PRESS. SYS. D/S
DRAWING NO. LDW280-51608
EO NO. A6

ISSUED BY LIAISON J. JARVIS x 6452 SECTION VD1 GROUP NO. 280 PL 35

01 NAS 9-1100

ENG 32.1 REV 3-65

GRUMMAN AIRCRAFT ENGINEERING CORP.
CODE IDENT NO. 26512
ENGINEERING ORDER

DWG. NO. LDW280-51608 | EO NO. A7
CONTROL INFO NO. LM-5-11279

ON-1: SH 5, ZONE 13B
RELOCATED & ADDED CLAMPS SHOWN

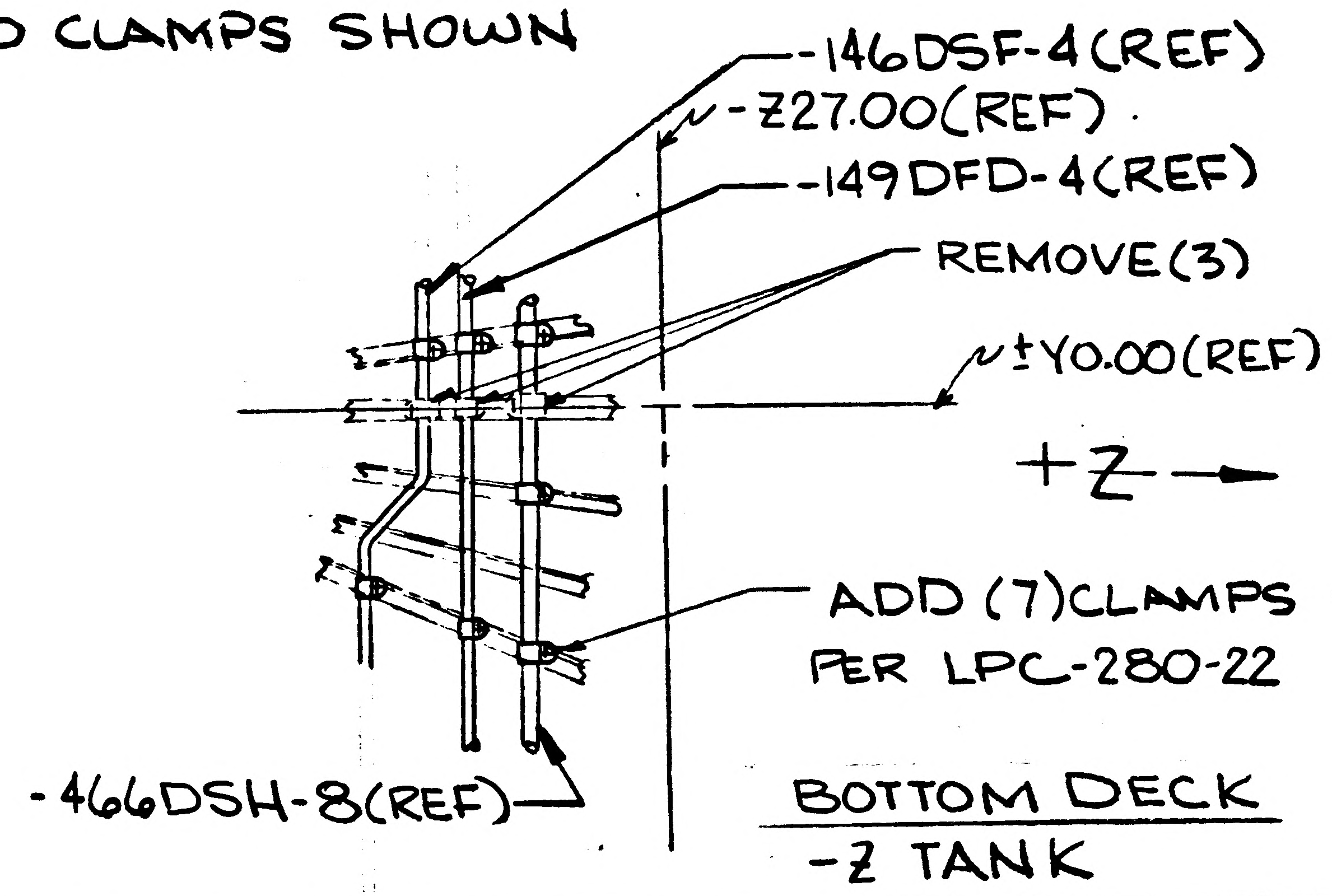
-146DSF-4(REF)
-Z27.00(REF)
-149DFD-4(REF)
REMOVE(3)
±Y0.00(REF)
+Z
ADD (7)CLAMPS PER LPC-280-22
-466DSH-8(REF)
BOTTOM DECK
-Z TANK

DETAIL SPEC REQ		CL II ENGRG CHG		CL I ENGRG CHG	

5

REASON FOR EO	DESCRIPTION OF EO	GAEC EO RELEASE
STRUCTURE CANNOT SUPPORT CLAMPING SHOWN ON DWG.	ON-1: ADDED & RELOCATED CLAMPS	LE

MODEL	EFFECTIVITY		
	PROCURING ACTIVITY NO.	GAEC UNIT NO.	SUB CONTR UNIT NO.
LM	LM-1(31)		

DRAWING CHANGE REQD		DISPOSITION OF PARTS	
REVISE DWG	RECORD EO	REWORK	SCRAP
✓		✓	

	VDI	SUPPORT	RELIAB. GROUP	GROUP LEADER	STRESS GROUP	LIAISON ENGRG	PROJ ENGRG	~~GOVT~~
APPROVED BY	jw	—	—	—	as 12/9/66	CH	RMC (WP)	
DATE	12/6-66	—	—	—		12-7-66	12-8-66	12-7-66

PRIORITY	DRAWING TITLE	DRAWING NO.	EO NO.
C	LINES INSTALLATION DESCENT STAGE	LDW280-51608	A7

ISSUED BY P.J. MARTELLO x6655 SECTION EQUIP. LINES VDI GROUP NO. 332 PL 5

01 NAS 9-1100

ENG 32.1 REV 3-65 *

GRUMMAN AIRCRAFT ENGINEERING CORP.
CODE IDENT NO. 26512
ENGINEERING ORDER

DWG NO. LDW280-51608
EO NO. A8
CONTROL INFO NO. LDW280A-4568

```
ON-1  IN B/M  REMOVE LDW270M10003-1 (2)
              ADD    GP10N-33 (1)
                     GP10N-99 (1)
      IN F/D  SH6  ZONE 22C
                     REMOVE LDW270M10003-1
                     ADD    GP10N-33
                   ZONE 23C
                     REMOVE LDW270M10003-1
                     ADD    GP10N-99
```

⊗ LDW270M10014-23 & -63 HAVE BEEN INSTAL IN THE VEHICLE PER A TPS

WORK COMPLETED

DETAIL SPEC REQ		CL II ENGRG CHG		CL I ENGRG CHG		5

REASON FOR EO: LDW270M10003 & LDW270M10014 REPLACED BY GP10N (REF DCRF 323-1283)

DESCRIPTION OF EO: ON-1 REMOVED LDW270M10003-1. ADDED GP10N-33 & GP10N-99.

GAEC EO RELEASE: FR 1/4/7

MODEL	PROCURING ACTIVITY NO.	GAEC UNIT NO.	SUB CONTR UNIT NO.
LM		LM-1(31)	

DRAWING CHANGE REQD: REVISE DWG	RECORD EO	DISPOSITION OF PARTS: REWORK	SCRAP			SUPPORT	RELIAB. GROUP	GROUP LEADER	STRESS GROUP	LIAISON ENGRG	PROJ ENGRG	
✓		⊗		APPROVED BY	Jew	—	—	—	—			
				DATE	12/30						12/30	1/4/66
				1	VD1							

PRIORITY: C
DRAWING TITLE: LINES INSTL PROPULSION & PRESSURIZATION SYS. D/S
DRAWING NO. LDW280-51608
EO NO. A8

ISSUED BY W.KUTNER X7427
SECTION PROPULSION
GROUP NO. 345
PL 35

01

NAS 9-1100

ENG 32.2 REV 3-65

GRUMMAN AIRCRAFT ENGINEERING CORP.
CODE IDENT NO. 26512
ENGINEERING ORDER

DWG NO. LDW280-51608 | EO NO. A9
CONTROL INFO NO. LDW280A4798

IN B/M & F/D: REVISE INSTRUMENTATION PRESSURE PORT IN +Y & +Z TANK LOWER COVER AS FOLLOWS:

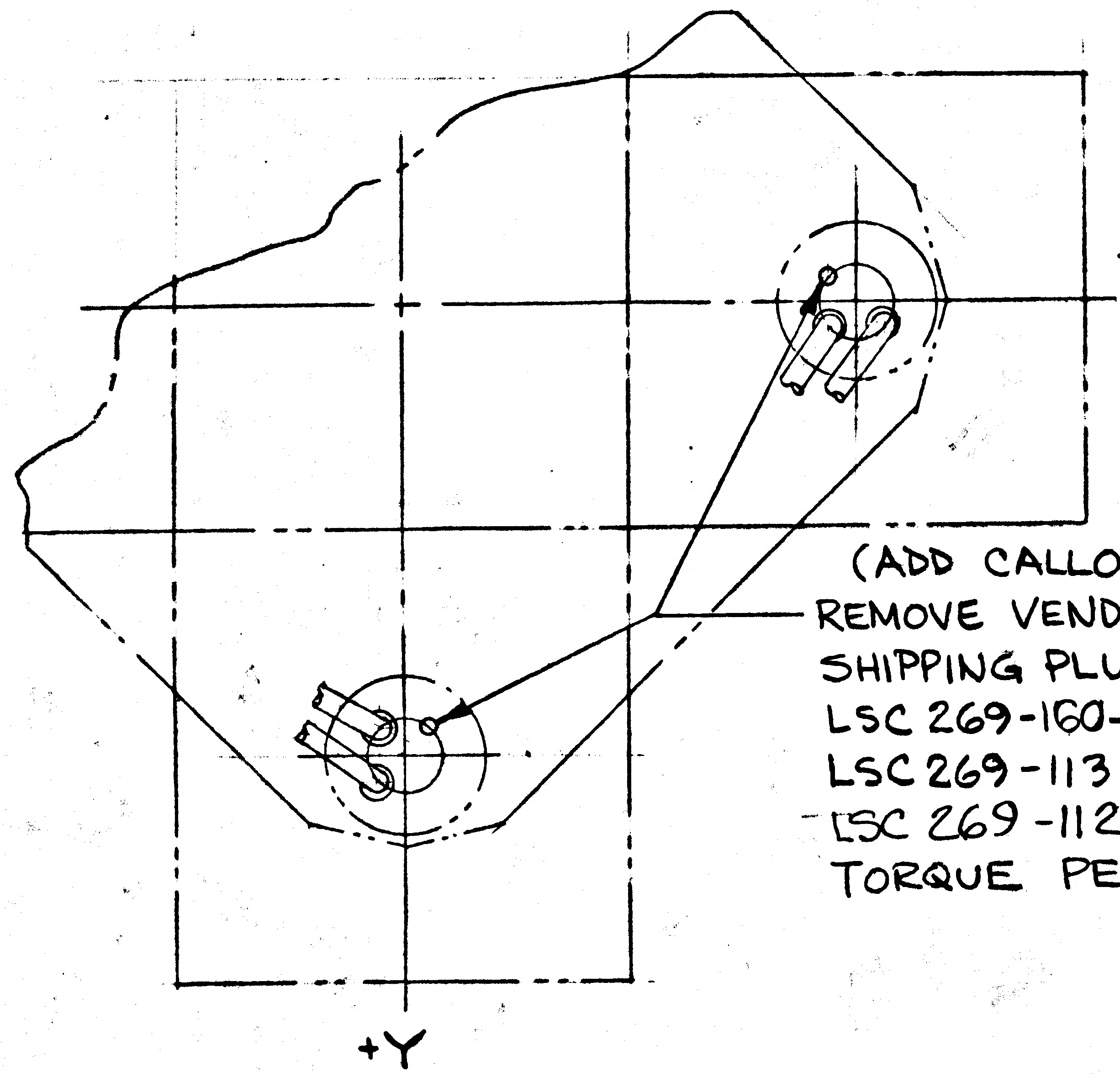

(ADD CALLOUT)
REMOVE VENDOR SUPPLIED SEAL AND SHIPPING PLUG & ADD
LSC 269-160-4 PLUG (2)
LSC 269-113-4 SEAL (2)
LSC 269-112-4 COUPLING NUT (2)
TORQUE PER LSP-14-17402

PRE CF. II
POST FEAT
5

DETAIL SPEC REQ		CL II ENGRG CHG		CL I ENGRG CHG		

REASON FOR EO	DESCRIPTION OF EO	GAEC EO RELEASE
ENGRG ERROR - TEMPORARY SHIPPING PLUG SHOULD HAVE BEEN REPLACED.	IN B/M & F/D REMOVED VENDOR SUPPLIED SHIPPING PLUG & SEAL FROM INSTRUMENTATION PRESSURE PORT IN +Y & +Z TANK LOWER COVER & REPLACED WITH LSC 269-160-4(2), LSC 269-112-4(2), LSC 269-113-4 (2)	C 1-11-7

MODEL	EFFECTIVITY: PROCURING ACTIVITY NO.	GAEC UNIT NO.	SUB CONTR UNIT NO.
LM		LM-1 (31)	

DRAWING CHANGE REQD: REVISE DWG	RECORD EO	DISPOSITION OF PARTS: REWORK	SCRAP
✓		✓	

APPROVED BY								
DATE	1/10/67	1/10/67					1/11/67	1-11-67
1	PROP	~~SUPPORT~~	RELIAB. GROUP	GROUP LEADER	STRESS GROUP	LIAISON ENGRG	PROJ ENGRG	~~GSE~~

PRIORITY	DRAWING TITLE	DRAWING NO.	EO NO.
C	LINES INSTALLATION - PROPULSION AND PRESSURIZATION SYSTEM - DESCENT STAGE	LDW280-51608	A9

ISSUED BY J. REBHOLZ x1471 1-10-67 SECTION PROPULSION GROUP NO. 345 PL 35

01 NAS 9-1100

ENG 32.1 REV 3-65 R B

GRUMMAN AIRCRAFT ENGINEERING CORP.
CODE IDENT NO. 26512
ENGINEERING ORDER

DWG. NO. LDW280-51608	EO NO. A10
CONTROL INFO NO. LDW280A-5152	

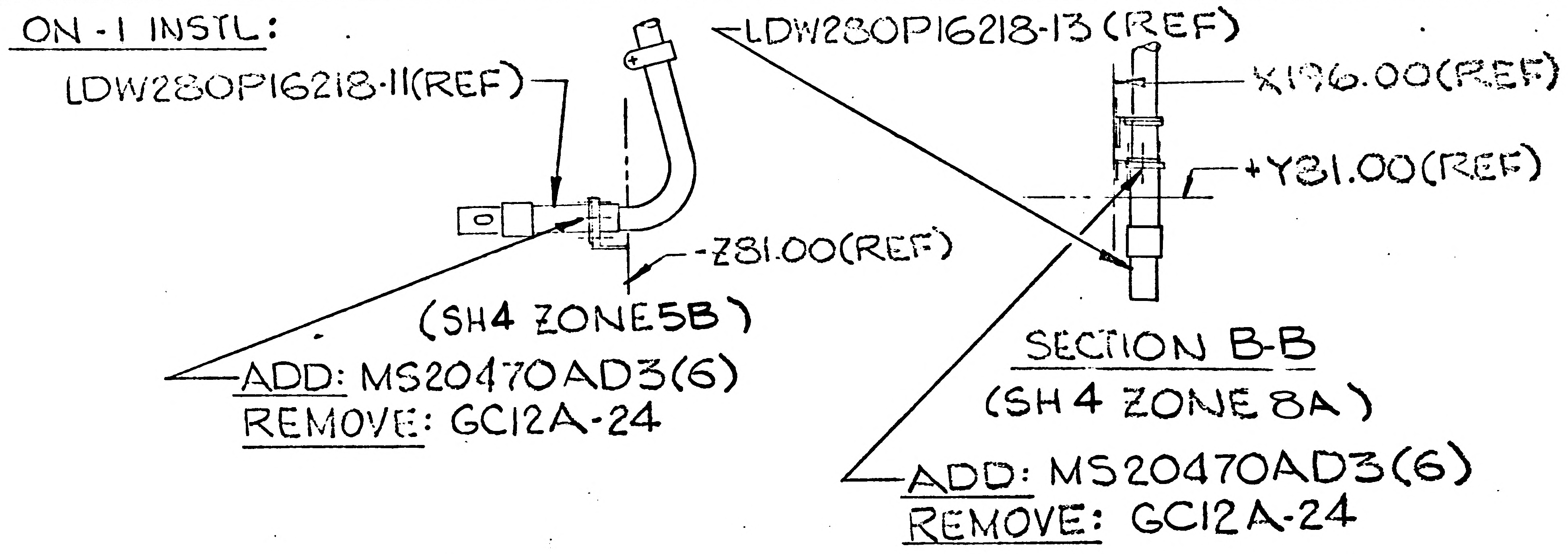
ON-1 INSTL:
LDW280P16218-11(REF)
LDW280P16218-13 (REF)
X196.00(REF)
+Y81.00(REF)
-Z81.00(REF)
(SH4 ZONE5B)
ADD: MS20470AD3(6)
REMOVE: GC12A-24
SECTION B-B
(SH 4 ZONE 8A)
ADD: MS20470AD3(6)
REMOVE: GC12A-24

DETAIL SPEC REQ		CL II ENGRG CHG		CL I ENGRG CHG		

REASON FOR EO	DESCRIPTION OF EO	GAEC EO RELEASE
REDESIGN OF LDW280P16218-11&-13	ON-1 INSTL: REMOVED GC12A-24 (2) & ADDED: MS20470AD3(12) TO BM & FLD OF DWG	FR 1/24/67

MODEL	PROCURING ACTIVITY NO.	GAEC UNIT NO.	SUB CONTR UNIT NO.
LM		LM-1 (31)	
		–	

DRAWING CHANGE REQD: REVISE DWG	RECORD EO	DISPOSITION OF PARTS: REWORK	SCRAP	APPROVED BY / DATE		SUPPORT	RELIAB. GROUP	GROUP LEADER	STRESS GROUP	LIAISON ENGRG	PROJ ENGRG	~~GOVT~~
✓		✓		1	Jap 1/19/67 VLI			JW/CHC 1-23-67	1/23/67		1/23/67	1/23/67

PRIORITY	DRAWING TITLE	DRAWING NO.	EO NO.
C	LINES INSTALLATION - PROPULSION & PRESSURIZATION SYSTEM - D/S	LDW280-51608	A10

ISSUED BY P.J. MARTELLO x1441 SECTION EQUIP. LINES (VDI) GROUP NO. 332 PL 35

01

NAS 9-1100

B

ENG 32.1 REV 3-65

GRUMMAN AIRCRAFT ENGINEERING CORP.
CODE IDENT NO. 26512
ENGINEERING ORDER *

DWG. NO. LDW280-51608 EO NO. B1
CONTROL INFO NO. LM5-12356

THIS IS A REVISION OF EO A10

ON EO A10 MS20470AD3(6) RIVETS CALLED OUT IN 2 PLACES SHOULD BE MS20470A3(6)

RELEASED BY LIAISON

DETAIL SPEC REQ	☐	CL II ENGRG CHG	☐	CL I ENGRG CHG	☐	5

REASON FOR EO: SOFT RIVETS REQD

DESCRIPTION OF EO: REF EO A10
ON-1 MS20470A3(12) WAS MS20470AD3(12)

GAEC EO RELEASE: FR 31 05 225

MODEL	EFFECTIVITY		
	PROCURING ACTIVITY NO.	GAEC UNIT NO.	SUB CONTR UNIT NO.
LM		LM-1(31)	

DRAWING CHANGE REQD		DISPOSITION OF PARTS	
REVISE DWG	RECORD EO	REWORK	SCRAP
✓		✓	

APPROVED BY	GW	—	—	—			RMC (EO)	
DATE	2/28/6				2-10-67	2-10-67	2-20-67	2-10-67
1	VD1	SUPPORT	RELIAB. GROUP	GROUP LEADER	STRESS GROUP	LIAISON ENGRG	PROJ ENGRG	~~GOVT~~

PRIORITY	DRAWING TITLE	DRAWING NO.	EO NO.
C	LINES INSTL PROPULSION & PRESS. SYSTEM - D/S	LDW280-51608	B1

ISSUED BY LIAISION J. GRASSIANO X6216 SECTION EQUIP LINES VDI GROUP NO. 332 PL 35

01

NAS 9-1100

GRUMMAN AIRCRAFT ENGINEERING CORP.
CODE IDENT NO. 26512
ENG 32.1 REV 3-65
ENGINEERING ORDER

DWG. NO. LDW280-51608
EO NO. B3
CONTROL INFO NO. LDW280A 5364

IN F/D & BM ADD LDW280P16221-17 SPACER TO -1 INSTL.

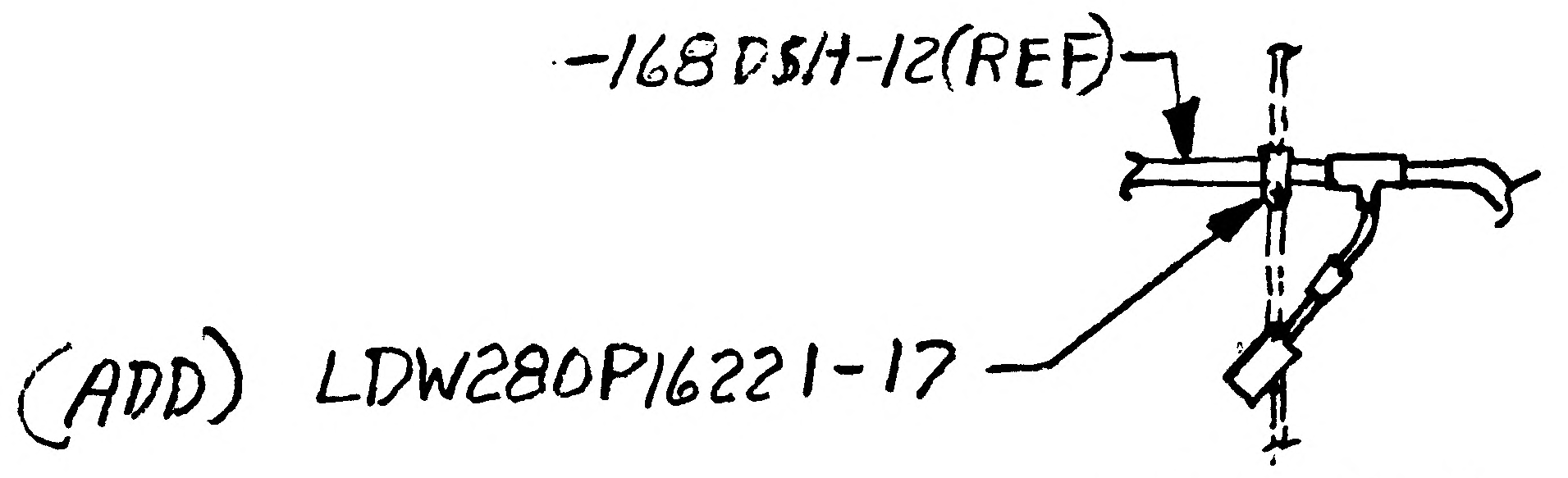

VIEW C-C
ZONE 6C, SH 4

DETAIL SPEC REQ		CL II ENGRG CHG	✓	CL I ENGRG CHG		5

REASON FOR EO: ALLOW FOR CLEARANCE OF INSTL OF XDUCER.

DESCRIPTION OF EO: ON -1 INSTL. ADDED LDW280P16221-17 SPACER TO F/D & B/M

GAEC EO RELEASE: FR 2/14/67

MODEL	PROCURING ACTIVITY NO.	GAEC UNIT NO.	SUB CONTR UNIT NO.
LM		LM 1 (31)	

DRAWING CHANGE REQD		DISPOSITION OF PARTS	
REVISE DWG	RECORD EO	REWORK	SCRAP
✓		✓	

APPROVED BY	JAP	—	—	JW CHC	W/H			
DATE	2/2/67			2-2-67	2/6/67		2/10/67	2/13/67
1	VDI	SUPPORT	RELIAB. GROUP	GROUP LEADER	STRESS GROUP	LIAISON ENGRG	PROJ ENGRG	

PRIORITY	DRAWING TITLE	DRAWING NO.	EO NO.
C	LINES INSTL PROPULSION & PRESS. SYSTEM DESCENT STAGE	LDW280-51608	B3

ISSUED BY J. Bohun 2-2-67 x7033 SECTION Equip Lines VDI GROUP NO. 332 PL 35

01

NAS 9-1100

GRUMMAN AIRCRAFT ENGINEERING CORP.
CODE IDENT NO. 26512
ENGINEERING ORDER

B
INO 32.2 REV 3-65

DWG. NO. LDW280-51608 | EO NO. B4
CONTROL INFO NO. LM-5-11865

ON-1 INSTL SHEET 5 ZONE 14B ADD CLAMPS & REVISE LINE ROUTING AS SHOWN

RELEASED BY LIAISON

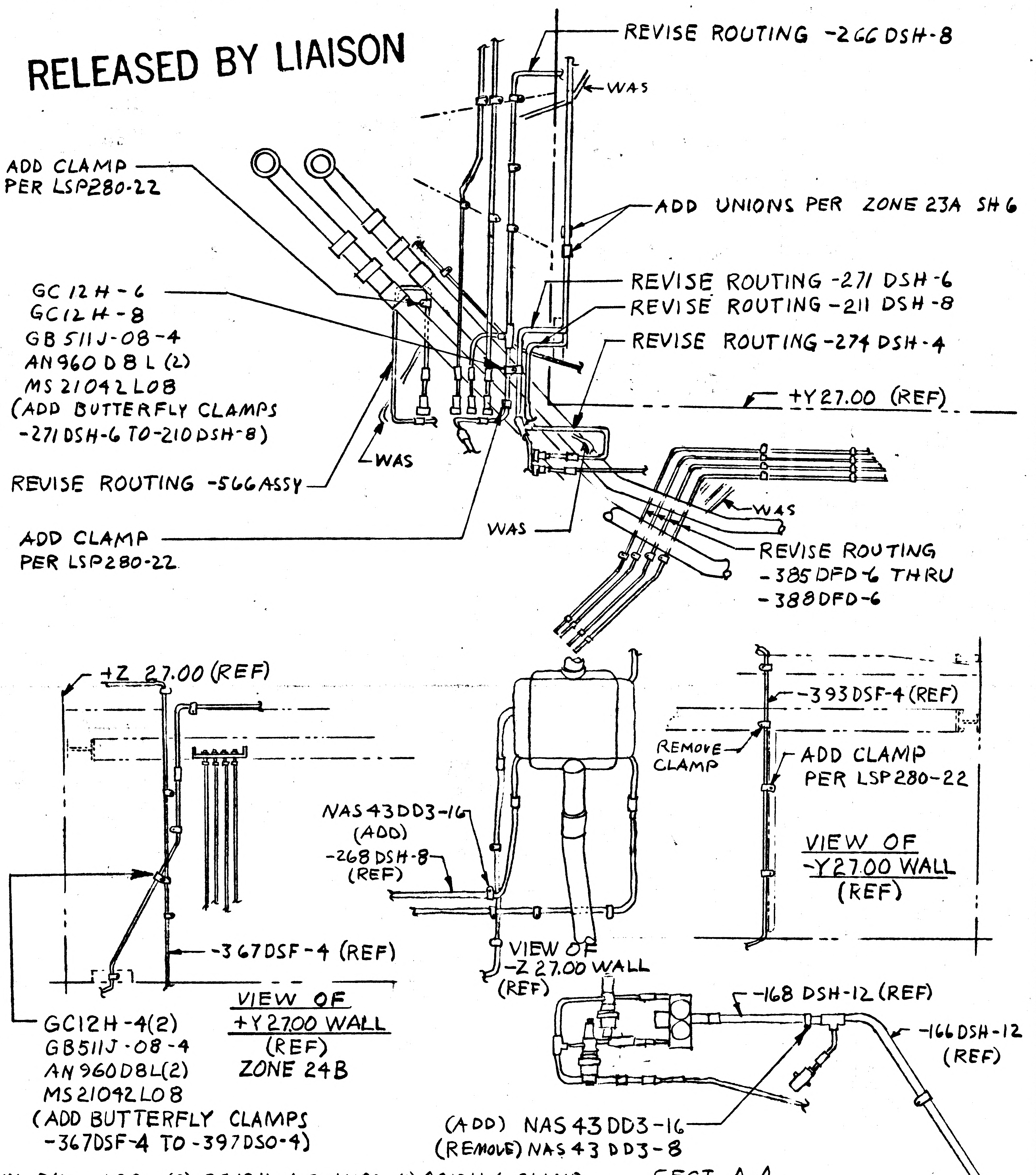
REVISE ROUTING -266 DSH-8
WAS
ADD CLAMP PER LSP280-22
ADD UNIONS PER ZONE 23A SH 6
REVISE ROUTING -271 DSH-6
REVISE ROUTING -211 DSH-8
REVISE ROUTING -274 DSH-4
GC12H-6
GC12H-8
GB511J-08-4
AN960D8L(2)
MS21042L08
(ADD BUTTERFLY CLAMPS -271 DSH-6 TO -210 DSH-8)
+Y27.00 (REF)
WAS
REVISE ROUTING -566 ASSY
WAS
WAS
ADD CLAMP PER LSP280-22
REVISE ROUTING -385 DFD-6 THRU -388 DFD-6
+Z 27.00 (REF)
-393 DSF-4 (REF)
REMOVE CLAMP
ADD CLAMP PER LSP280-22
NAS43DD3-16 (ADD)
-268 DSH-8 (REF)
VIEW OF -Y27.00 WALL (REF)
-367 DSF-4 (REF)
VIEW OF -Z 27.00 WALL (REF)
-168 DSH-12 (REF)
-166 DSH-12 (REF)
GC12H-4(2)
GB511J-08-4
AN960D8L(2)
MS21042L08
(ADD BUTTERFLY CLAMPS -367DSF-4 TO -397DSO-4)
VIEW OF +Y27.00 WALL (REF) ZONE 24B
(ADD) NAS43DD3-16
(REMOVE) NAS43DD3-8
SECT A-A ZONE 6C (REF)

IN B/M ADD (2) GC12H-4 CLAMPS, (1) GC12H-6 CLAMP, (1) GC12H-8 CLAMP, (4) AN960D8L WASHER, (2) MS21042L08 NUT, (3) NAS43DD3-16, Remove (1) NAS43DD3-8

DETAIL SPEC REQ ☐ CL II ENGRG CHG ☒ CL I ENGRG CHG ☐ 5

REASON FOR EO: TO MAKE DRAWING AGREE WITH CLAMPING & ROUTING ON VEHICLE

DESCRIPTION OF EO: ON-1 INSTL IN F/D & B/M ADDED (2) GC12H-4 CLAMP, (1) GC12H-6 CLAMP, (1) GC12H-8 CLAMP, 4 AN960D8L WASHER, (2) MS21042L08 NUT. REVISED ROUTING OF -266 DSH-8, -271 DSH-6, -211 DSH-8, -274 DSH-4, -566 ASSY, -385 DFD-6 THRU -388 DFD-6. IN F/D & B/M ADDED (2) NAS43DD3-16 REMOVED (1) NAS43DD3-8

GAEC EO RELEASE: JK

MODEL	EFFECTIVITY PROCURING ACTIVITY NO.	GAEC UNIT NO.	SUB CONTR UNIT NO.
LM		LM-1 (31)	

DRAWING CHANGE REQD: REVISE DWG	RECORD EO	DISPOSITION OF PARTS: REWORK	SCRAP			SUPPORT	RELIAB. GROUP	GROUP LEADER	STRESS GROUP	LIAISON ENGRG	PROJ ENGRG	GOVT
✓		✓		APPROVED BY	WT			~	JF	CH	em	
				DATE	2/20/67			~	2-22-67	2-24-67	2-24-67	2-24-67
				3	VDI							

PRIORITY: C
DRAWING TITLE: LINES INSTL PROPULSION & PRESSURIZATION SYSTEM D/S
DRAWING NO. LDW280-51608
EO NO. B4

ISSUED BY HUGH RYAN X7033 2/18/67 SECTION VDI (EQUIP LINES GROUP NO. 332 PL 5

01
NAS 9-1100

B

ENG 32.1 REV 3-65

GRUMMAN AIRCRAFT ENGINEERING CORP.
CODE IDENT NO. 26512
ENGINEERING ORDER

DWG. NO. LDW280-51608 | EO NO. B5
CONTROL INFO NO. LM-5-11909

RELEASED BY LIAISON

REMOVE CALLOUT
GC12H-6
GC12H-8
GB511J-08-4
AN960D8L(2)
MS21042L08
(ADD BUTTERFLY CLAMPS
-271DSH-6 TO -210DSH-8)

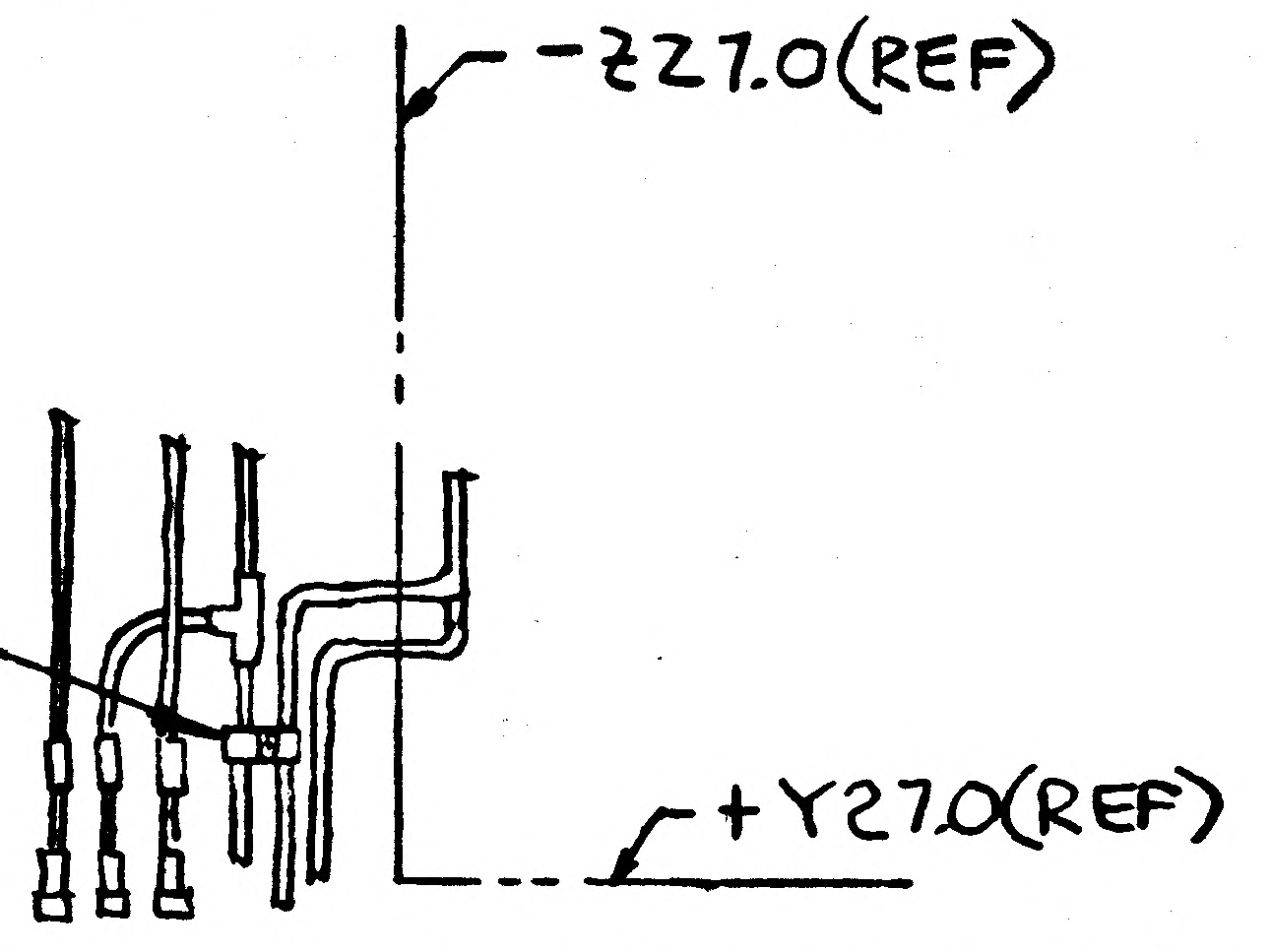

VIEW OF BOTTOM DECK

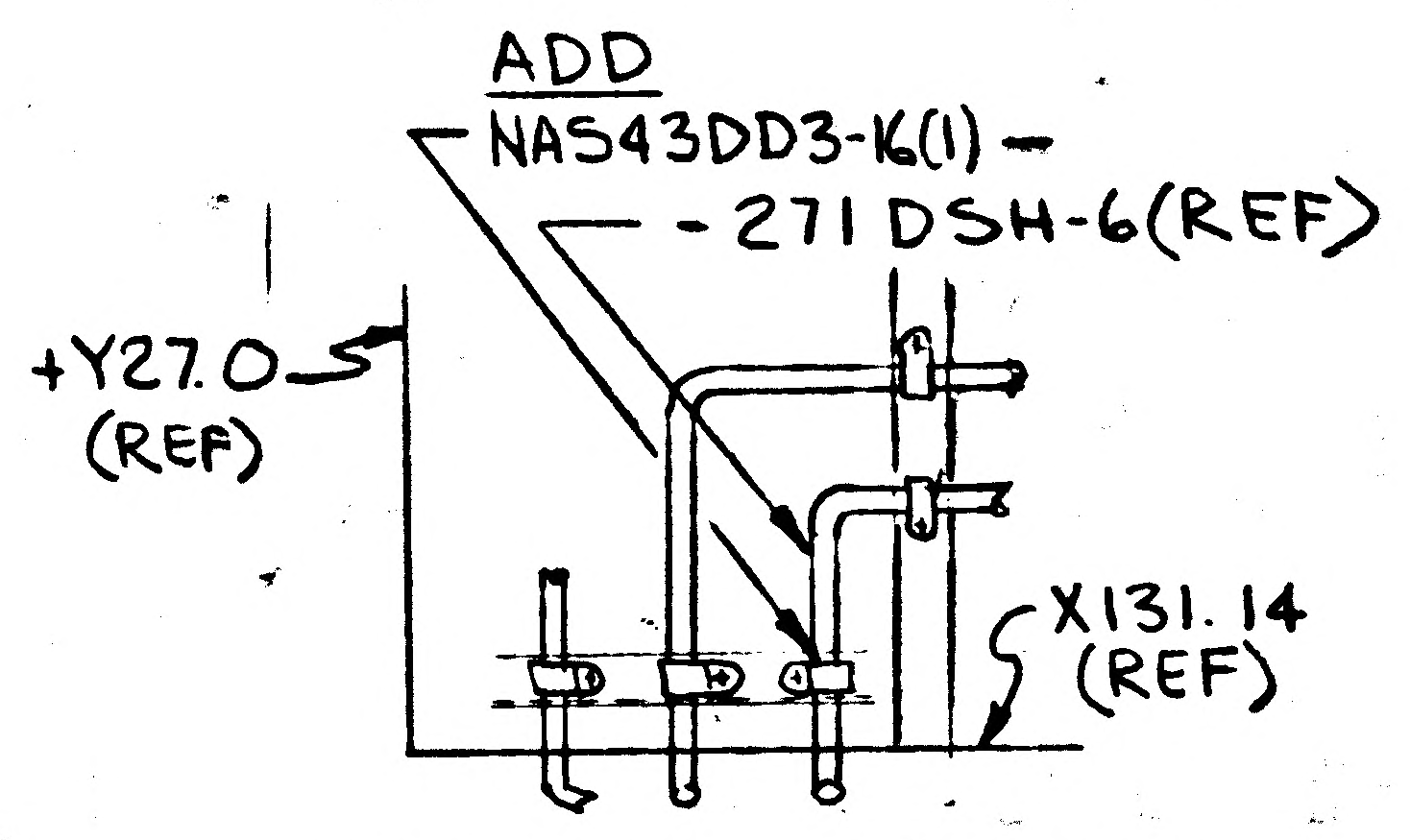

VIEW OF -Z27 WALL

LDW280-51608-1 INSTL.

THIS A REVISION OF E.O. B4

DETAIL SPEC REQ	☐	CL II ENGRG CHG	☐	CL I ENGRG CHG	☐

REASON FOR EO: TO PREVENT LINES FROM CHAFING

DESCRIPTION OF EO: ON-1, REF E.O B4
ADDED NAS43DD3-16(1) REMOVED GC12H-6,
GC12H-8(1) GB511J-08-4(1) AN960D8L(2) & MS21042L08
(ADD BUTTERFLY ----- TO -210 DSH-8)

GAEC EO RELEASE: C

MODEL	EFFECTIVITY: PROCURING ACTIVITY NO.	EFFECTIVITY: GAEC UNIT NO.	EFFECTIVITY: SUB CONTR UNIT NO.
LM		LM-1 (31)	

DRAWING CHANGE REQD: REVISE DWG	DRAWING CHANGE REQD: RECORD EO	DISPOSITION OF PARTS: REWORK	DISPOSITION OF PARTS: SCRAP
✓		✓	

		SUPPORT	RELIAB. GROUP	GROUP LEADER	STRESS GROUP	LIAISON ENGRG	PROJ ENGRG	~~GOVT~~
APPROVED BY	WT					CH	RMcE	
DATE	2-25-67				2-25-67	2-25	3-2-67	2-27-67
1	YD1							

PRIORITY: C
DRAWING TITLE: LINES INSTL PROPULSION & PRESSURIZATION SYS D/S
DRAWING NO.: LDW280-51608
EO NO.: B5

ISSUED BY TOM BIANCHI (7033)
SECTION YD1
GROUP NO. 332
PL 35

01

NAS 9-1100

B

ENG 32.1 REV 3-65

GRUMMAN AIRCRAFT ENGINEERING CORP.
CODE IDENT NO. 26512 *

ENGINEERING ORDER

DWG. NO. LDW280-51608		EO NO. B6
CONTROL INFO NO. LM-5-11952		

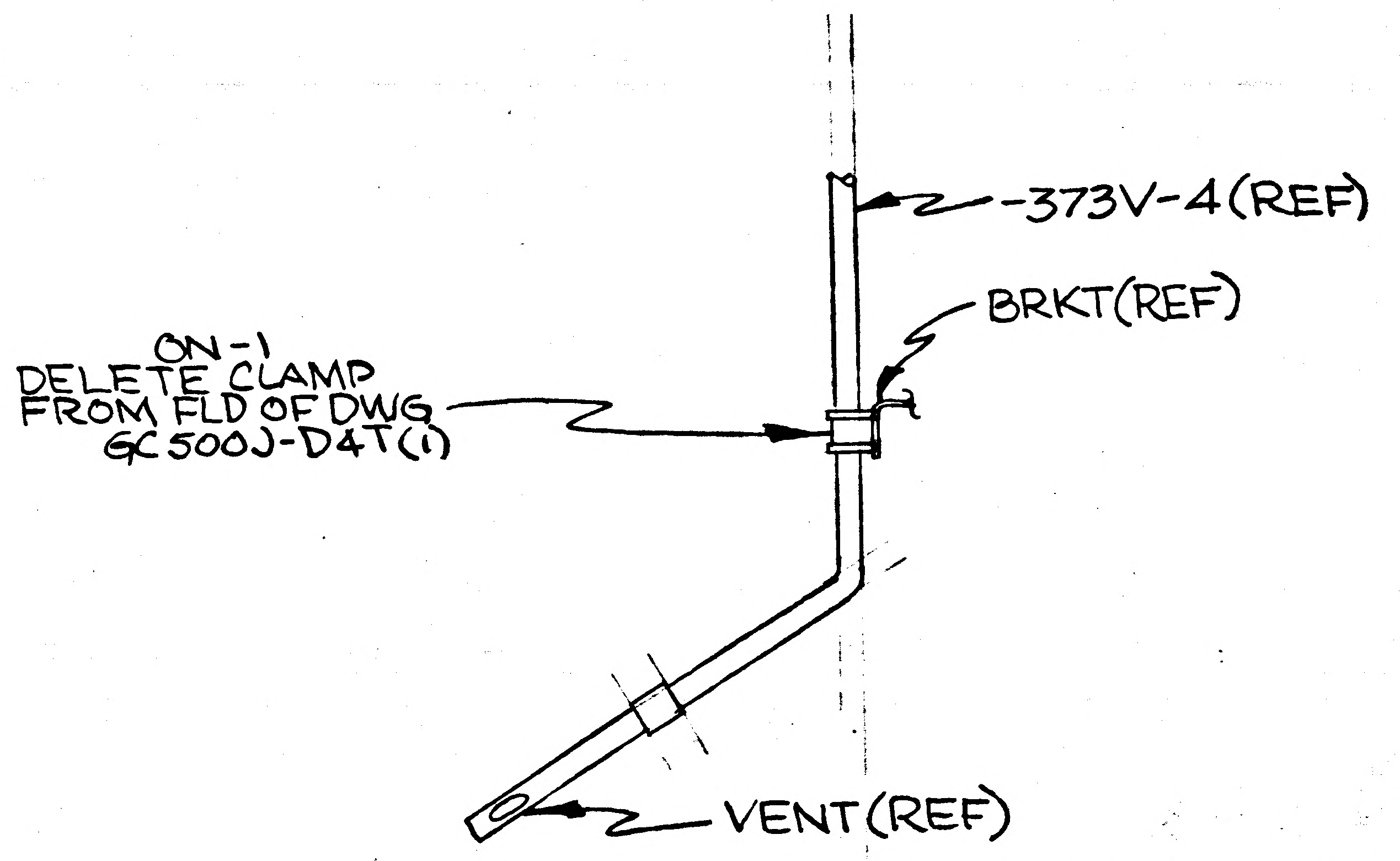

RELEASED BY LIAISON

DETAIL SPEC REQ		CL II ENGRG CHG		CL I ENGRG CHG	

REASON FOR EO	DESCRIPTION OF EO	GAEC EO RELEASE
LINE SUPT DELETED TO FACILITATE INSTL OF LINE	ON-1 DELETED GC500J-D4T(1).	5 C JK

MODEL	PROCURING ACTIVITY NO.	GAEC UNIT NO.	SUB CONTR UNIT NO.
LM		LM-1 (31)	

DRAWING CHANGE REQD		DISPOSITION OF PARTS										
				APPROVED BY	JW	—	—	—	DFJ	CH	RWC	
				DATE	3/15/67				3-7-67	3-6-67	3-10-67	3-7-67
REVISE DWG ✓	RECORD EO	REWORK ✓	SCRAP	1	VD1	SUPPORT	RELIAB. GROUP	GROUP LEADER	STRESS GROUP	LIAISON ENGRG	PROJ ENGRG	GOVT

PRIORITY	DRAWING TITLE	DRAWING NO.	EO NO.
C	LINES INSTL PROPULSION & PRESS. - D/S	LDW280-51608	B6

ISSUED BY B. BIDONDE X6522 SECTION VD1 (EQUIP. LINES) GROUP NO. 332 PL 5

01

NAS 9-1100

~~RELEASED BY LIAISON~~

ENG 32.2 REV 3-65

GRUMMAN AIRCRAFT ENGINEERING CORP.
CODE IDENT NO. 26512
ENGINEERING ORDER

DWG. NO. LDW280-51608	EO NO. B7
CONTROL INFO NO. LDW280A-5980	

ON-1 INSTL IN F/D & B/M ADD (1) LDW280-17388-482DSF-4 & (1)-483DSF-4 TUBE. & HARDWARE AS SHOWN

ON-1 INSTL IN F/D ZONES 21A, 22A, 23B, 25A, 25B, 26B REMOVE CALLOUTS 6 PLACES FOR GC500J CLAMPS INCLUDING BOLTS, WASHERS & NUTS

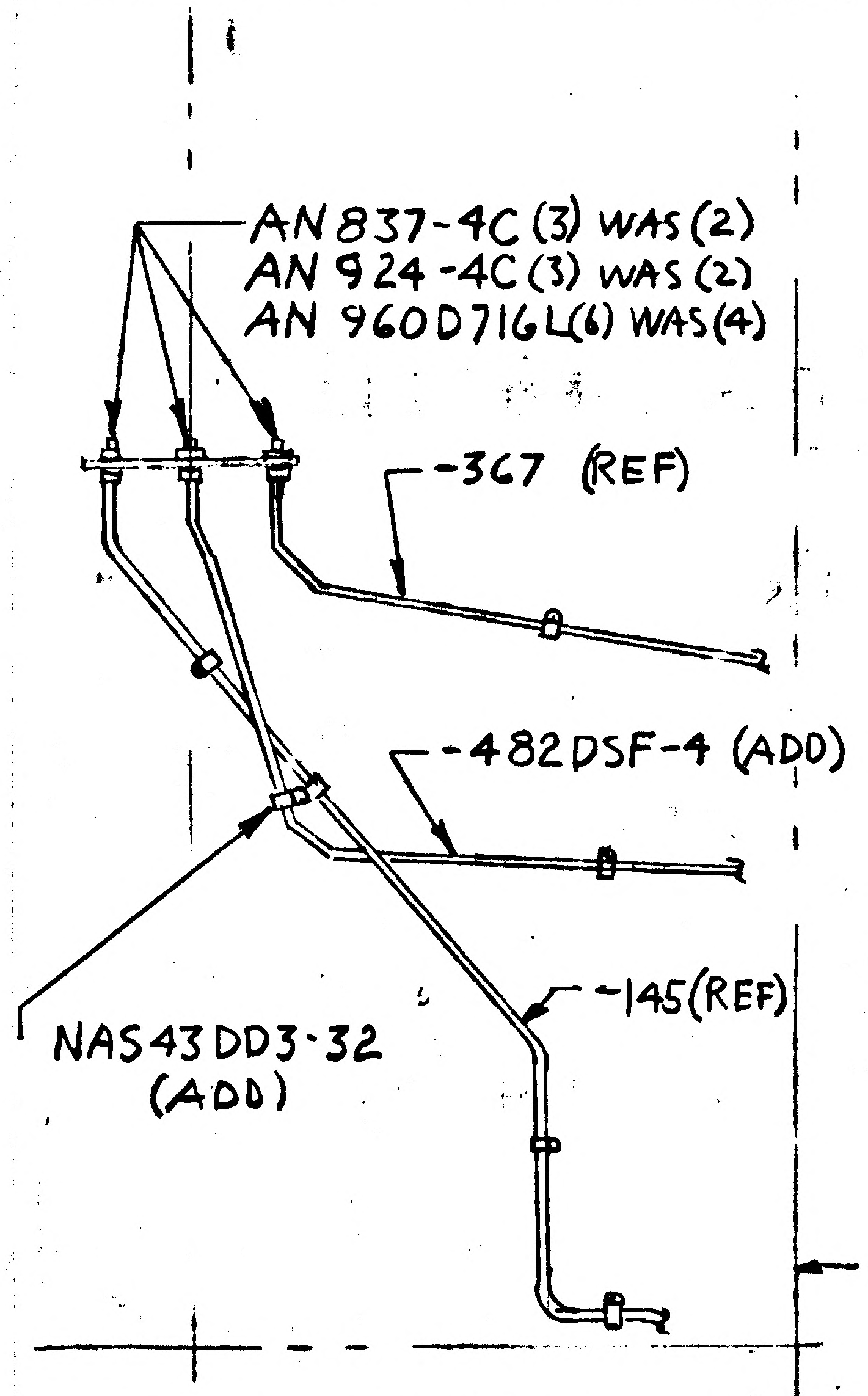

AN837-4C (3) WAS (2)
AN924-4C (3) WAS (2)
AN960D716L(6) WAS (4)
-367 (REF)
-482DSF-4 (ADD)
-145(REF)
NAS43DD3-32 (ADD)

VIEW OF +Z27 WALL
ZONE 25B SH6

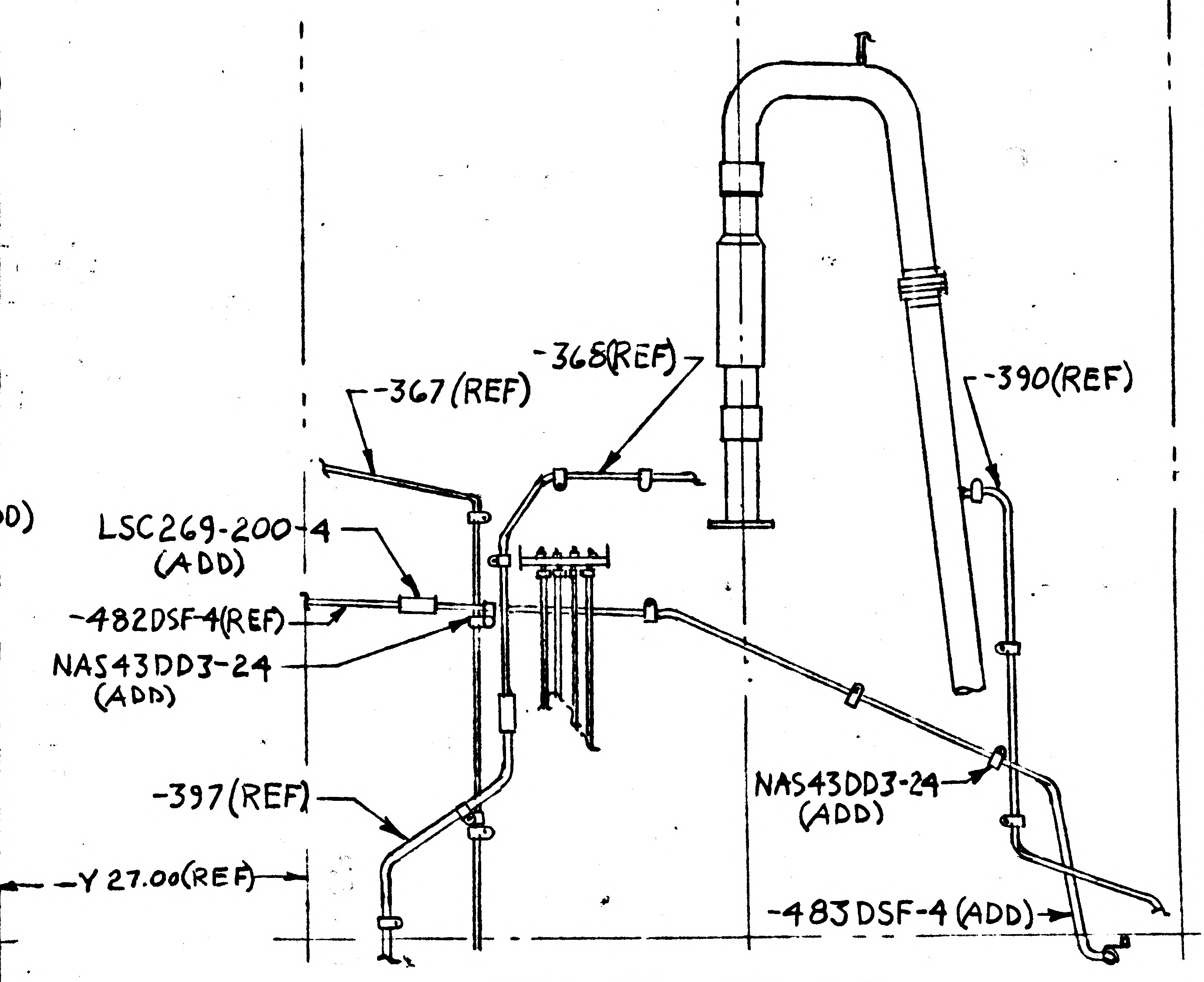

-367(REF)
-368(REF)
-390(REF)
LSC269-200-4 (ADD)
-482DSF-4(REF)
NAS43DD3-24 (ADD)
-397(REF)
-Y 27.00(REF)
NAS43DD3-24 (ADD)
-483DSF-4 (ADD)

VIEW OF +Y27 WALL
ZONE 24B SH6

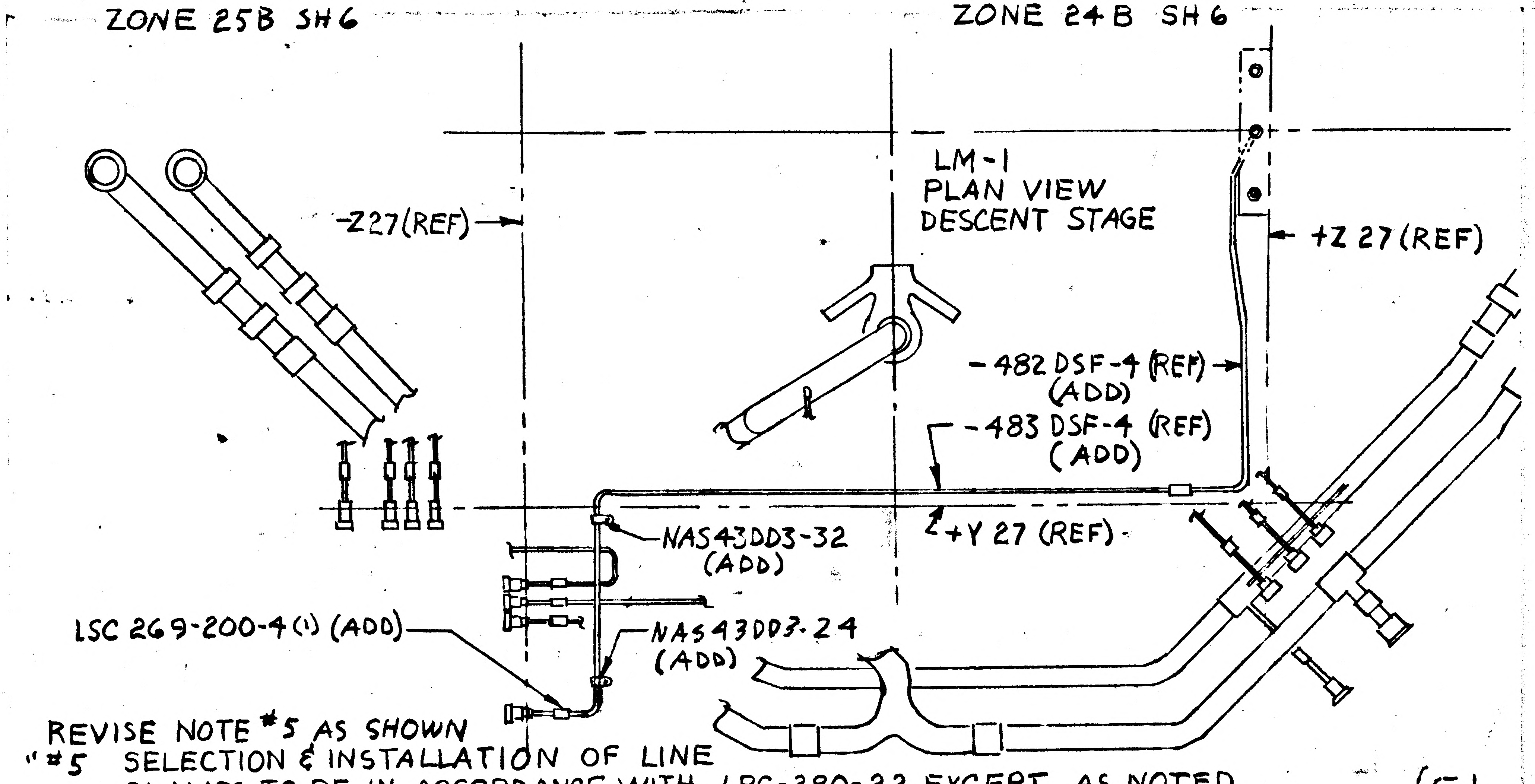

-Z27(REF)
+Z 27 (REF)
-482 DSF-4 (REF) (ADD)
-483 DSF-4 (REF) (ADD)
NAS43DD3-32 (ADD)
+Y 27 (REF)
LSC 269-200-4 (1) (ADD)
NAS43DD3-24 (ADD)

LM-1
PLAN VIEW
DESCENT STAGE

REVISE NOTE #5 AS SHOWN
"#5 SELECTION & INSTALLATION OF LINE CLAMPS TO BE IN ACCORDANCE WITH LPC-280-22 EXCEPT AS NOTED (5)

DETAIL SPEC REQ		CL II ENGRG CHG	✓	CL I ENGRG CHG		LCD 19-1077							
REASON FOR EO				DESCRIPTION OF EO								GAEC EO RELEASE	
ADD PRE VALVE TEST LINE.				ON-1 INSTL IN F/D & B/M ADDED NAS43DD3-32(2), NAS43DD3-24(2), LDW280-17388 -482DSF-4 & -483DSF-4 TUBE LSC269-200-4(2) REVISED NOTE 5, REMOVED CALLOUTS FOR GC500J CLAMPS								3/20/7	
MODEL	EFFECTIVITY			DRAWING CHANGE REQD		DISPOSITION OF PARTS		APPROVED BY					
	PROCURING ACTIVITY NO.	GAEC UNIT NO.	SUB CONTR UNIT NO.	✓		✓		DATE	3/15/67			3/15/67	3/16/67 3/17/67
LM		LM-1 (31)		REVISE DWG	RECORD EO	REWORK	SCRAP	1	VD1	SUPPORT	RELIAB. GROUP	GROUP LEADER	STRESS GROUP
												LIAISON ENGRG	PROJ ENGRG
				PRIORITY C	DRAWING TITLE LINES INSTL PROPULSION & PRESSURIZATION SYSTEM D/S					DRAWING NO. LDW280-51608		EO NO. B7	

ISSUED BY HUGH RYAN X7033 3-16-67 SECTION VD1 (EQUIP LINES) GROUP NO. 332 PL 25

01
NAS 9-1100

ENG 32.1 REV 3-65

GRUMMAN AIRCRAFT ENGINEERING CORP.
CODE IDENT NO. 26512
ENGINEERING ORDER

DWG. NO. LEO 280
EO NO. 563
CONTROL INFO NO. LDW280A-6407

REVISED TORQUE VALUE IN NOTE 4 IN THE FOLLOWING DWGS: -

DWG. NO	EFFECTIVITY	CHANGE
✓ LDW280-51608	LM 1 (31)	B8
LDW280-52608	LM 2 (32)	B2
LDW280-53608	LM 3 (33)	B3
LDW280-54608	LM 4 (34) THRU LM 15 (45)	A6

IN NOTE 4 - FIRST SENTENCE SHOULD READ
TORQUE TANK BOLTS NAS673V3H TO 45-48 IN LBS, WAS TORQUE TANK BOLTS NAS673V3H TO 32-35 IN LBS.

DETAIL SPEC REQ ☐ CL II ENGRG CHG ☑ CL I ENGRG CHG ☐ LCD 19-1078

REASON FOR EO: ADDED NEW TORQUE VALUE FOR FUEL & OX LINES INSTL.

DESCRIPTION OF EO: REVISED NOTE #4

GAEC EO RELEASE: JK 4/17/7

MODEL	PROCURING ACTIVITY NO.	GAEC UNIT NO.	SUB CONTR UNIT NO.
LM		NOTED	

DRAWING CHANGE REQD: REVISE DWG ✓ RECORD EO
DISPOSITION OF PARTS: REWORK NOT SCRAP REQ'D

	VDI	SUPPORT	RELIAB. GROUP	GROUP LEADER	STRESS GROUP	LIAISON ENGRG	PROJ ENGRG	
APPROVED BY				JW	J.V.		Dam	
DATE 1	4/18/67			4/18/67	4/18/67		4/18/67	4/19/67

PRIORITY: C
DRAWING TITLE: LINES INSTL PROPULSION & PRESS SYS. D/S
DRAWING NO.: LEO 280-
EO NO.: 563

ISSUED BY J. Bohun x1392 SECTION Equip. Lines (VDI) GROUP NO. 332 PL 25

01
NAS 9-1100

β

ENG 32.2 REV 3-65

GRUMMAN AIRCRAFT ENGINEERING CORP.
CODE IDENT NO. 26512
ENGINEERING ORDER

DWG. NO. LDW280-51608	EO NO. B9
CONTROL INFO NO. LDW285A-6460	

-1

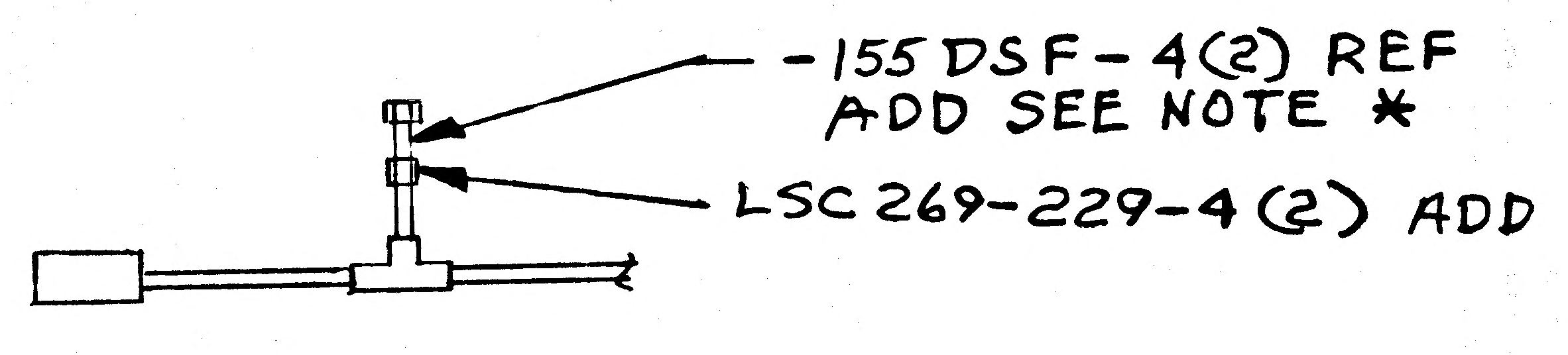

VIEW OF -Y WALL
SHEET 6 ZONE 21B

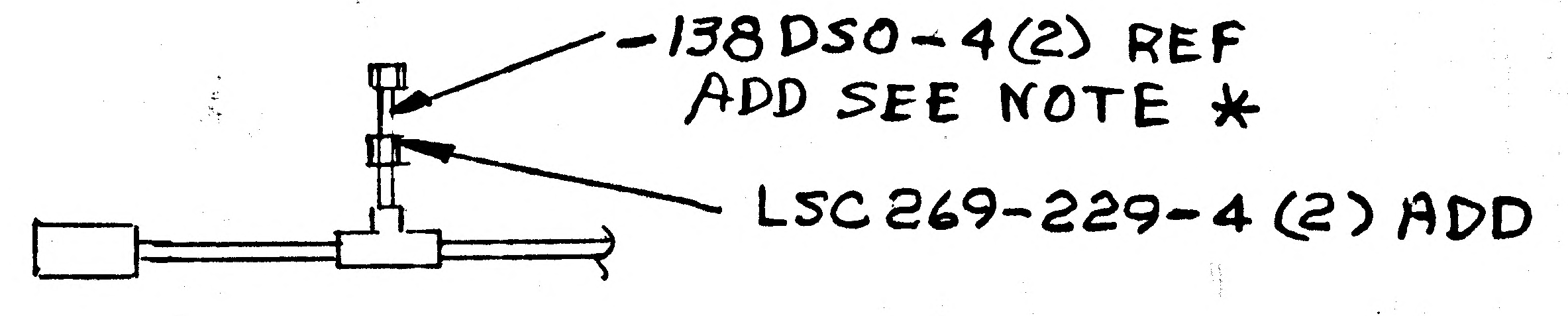

VIEW OF +Y WALL
SHEET 6 ZONE 24B

IN FIELD OF DWG & B/M ADD LSC 269-229-4 (4 REQD)

ADD TO NOTES

NOTE * AFTER COLD FLOW I, CUT OFF AN FITTINGS AND INSTALL LSC 269-229-4 CAPS

DETAIL SPEC REQ ☐	CL II ENGRG CHG ☑	CL I ENGRG CHG ☐	LCD19-1028		5 C
REASON FOR EO: CAP OF TUBES AFTER COLD FLOW TEST		DESCRIPTION OF EO: NOTED			GAEC EO RELEASE: JK 4/29/7

MODEL	PROCURING ACTIVITY NO.	GAEC UNIT NO.	SUB CONTR UNIT NO.
LM		LM1 (31)	

DRAWING CHANGE REQD: REVISE DWG	RECORD EO	DISPOSITION OF PARTS: REWORK	SCRAP
✓		✓	

APPROVED BY								
DATE	4/20/67			4/2/67	4/2/67		4/24/67	4/24/67
1	VDI	SUPPORT	RELIAB. GROUP	GROUP LEADER	STRESS GROUP	LIAISON ENGRG	PROJ ENGRG	~~GOVT~~

PRIORITY	DRAWING TITLE	DRAWING NO.	EO NO.
C	LINES INSTL PROPULSION & PRESS SYSTEM D/S	LDW280-51608	B9

ISSUED BY John Bohun X1392 SECTION Equip Lines (VDI) GROUP NO. 332 PL 25

01 NAS 9-1100

ENG 32.2 REV 3-65

GRUMMAN AIRCRAFT ENGINEERING CORP.
CODE IDENT NO. 26512
ENGINEERING ORDER

DWG. NO. LED 280		EO NO. 581
CONTROL INFO NO. LDW280A-6477		

ADD TO FIELD OF DWG
TYP 8 PLACES

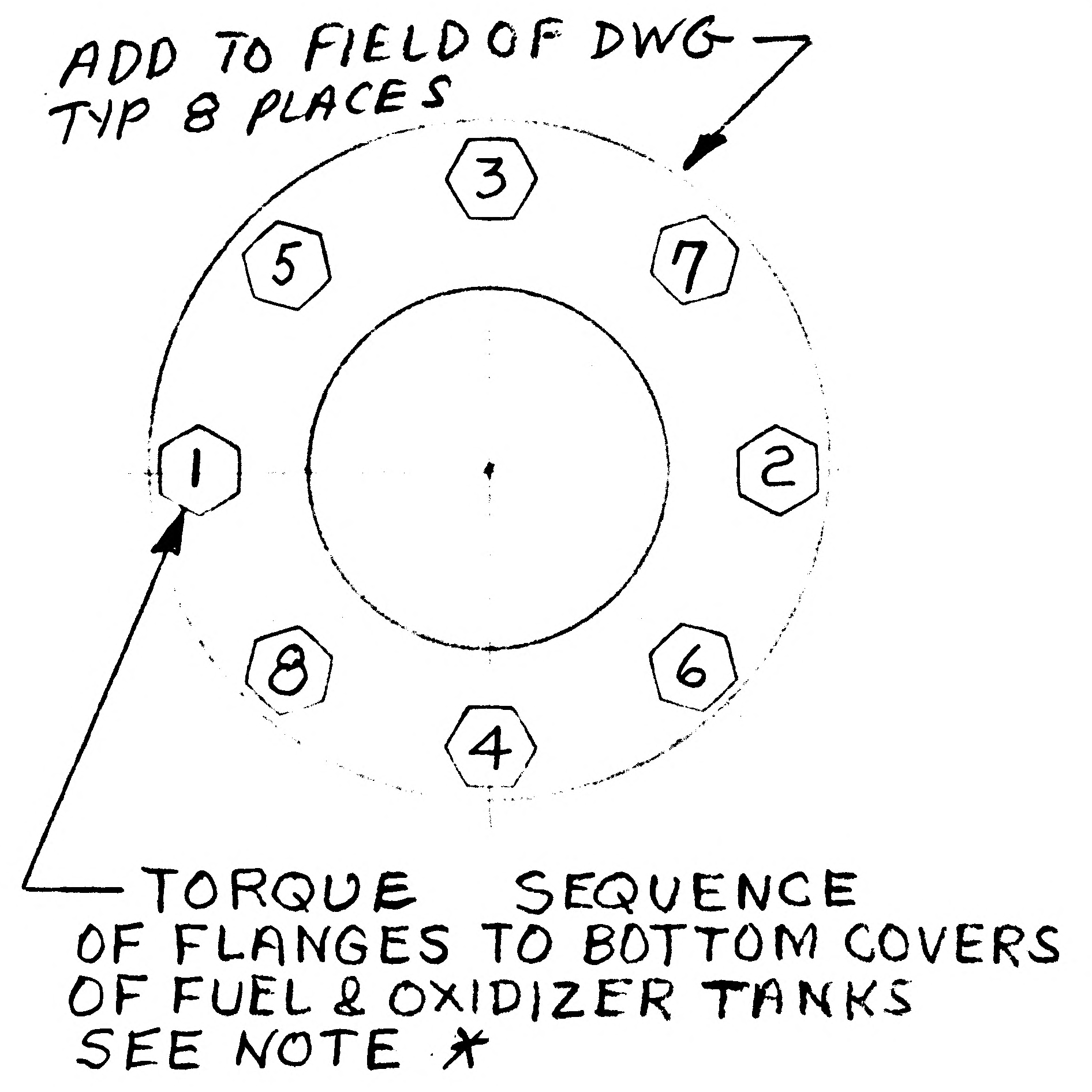

TORQUE SEQUENCE
OF FLANGES TO BOTTOM COVERS
OF FUEL & OXIDIZER TANKS
SEE NOTE *

CANCEL NOTE 4
& ADD NOTE * AS SHOWN

DWG. NO	EFFECTIVITY	CHANGE
LDW280-51608	LM 1 (31)	B10
LDW280-52608	LM 2 (32)	B4
LDW 280-53608	LM 3 (33)	B5
LDW 280-54608	LM 4(34) THRU LM 15(45)	A7

ADD NOTE

* TORQUE TANK BOLTS NAS673V3H TO 45-48 IN LBS
LUBRICATE ALL BOLT THREADS SHANK AND FAYING SURFACE WITH DUPONT PR-240AC BEFORE INSTALLING. INSTALL BOLTS FINGER TIGHT & TORQUE IN SEQUENCE AS FOLLOWS:-

a- PHYSICAL LOCATION FOR START OF SEQUENCE (BOLT #1) IS OPTIONAL
b- TORQUE ALL BOLTS PER SEQUENCE TO 15 IN LBS & REPEAT SEQUENCE UNTIL BOLTS DO NOT TURN WHEN 15 IN LBS IS APPLIED
c- REPEAT STEP b APPLYING 30 IN LBS.
d- REPEAT STEP b APPLYING 45-48 IN LBS FOR FINAL TORQUE

SAFETY WIRE PER MS33540 USING MS20995NC32 LOCKWIRE

01 NAS 9-1100

* ADD NEXT HIGHEST NOTE NO.

DETAIL SPEC REQ ☐	CL II ENGRG CHG ✓	CL I ENGRG CHG ☐	LCD -1078		5 C
REASON FOR EO			DESCRIPTION OF EO		Ⓡ GAEC EO RELEASE
ADDED TORQUE SEQUENCE FOR FUEL & OXID LINES INSTL.			ADDED NOTE *, DELETED NOTE 4		JK 5/1/67

MODEL	EFFECTIVITY: PROCURING ACTIVITY NO.	EFFECTIVITY: GAEC UNIT NO.	EFFECTIVITY: SUB CONTR UNIT NO.
LM		NOTED	

DRAWING CHANGE REQD: REVISE DWG	DRAWING CHANGE REQD: RECORD EO	DISPOSITION OF PARTS: REWORK	DISPOSITION OF PARTS: SCRAP	
✓		NOT	REQD	

	VDI	SUPPORT	RELIAB. GROUP	GROUP LEADER	STRESS GROUP	LIAISON ENGRG	PROJ ENGRG	GAEC
APPROVED BY				JW	N		Dunn	Bott.
DATE	4/20/67			4/20/67	4/21/67		4/25/67	4-28-67
1								

PRIORITY	DRAWING TITLE	DRAWING NO.	EO NO.
C	LINES INSTL PROPULSION & PRESS. SYS. D/S	LED 280	581

ISSUED BY J. Bohun x1392 SECTION Equip Lines (VDI) GROUP NO. 332 PL 25

B

ENG 32.1 REV 3-65

GRUMMAN AIRCRAFT ENGINEERING CORP.
CODE IDENT NO. 26512
ENGINEERING ORDER

DWG NO LDW280-51608 EO NO. C1
CONTROL INFO NO LDW280A-6621

IN Field of Dwg & B/M
ON -3 INSTL (SHEET 4 ZONE 4C & SHEET 2.01)

REMOVE LDW 280-17388-340 DSH-4
ADD LDW 280-17388-638 DSH-4

DETAIL SPEC REQ	☐	CL II ENGRG CHG	☑	CL I ENGRG CHG	☐ LCD-1078

REASON FOR EO: TO ALLOW FOR CLEARANCE FOR CONNECTOR TO He Squib Valve

DESCRIPTION OF EO:
ON -3
REMOVED LDW280-17388-340 DSH-4
ADDED LDW280-17388-638 DSH-4

GAEC EO RELEASE: JK 5/2/7

MODEL	PROCURING ACTIVITY NO.	GAEC UNIT NO	SUB CONTR UNIT NO
LM		LM1 (31)	

DRAWING CHANGE REQD: REVISE DWG ✓ RECORD EO
DISPOSITION OF PARTS: REWORK SCRAP ✓

APPROVED BY			SUPPORT	RELIAB GROUP	GROUP LEADER	STRESS GROUP	LIAISON ENGRG	PROJ ENGRG	
DATE	4/29/67				4/27/67	4/29/67		5/1/67	5-1-67
1	VD1								

PRIORITY: C
DRAWING TITLE: LINES INSTL PROPULSION & Helium PRESS SYSTEM DESCENT STAGE
DRAWING NO. LDW280-51608
EO NO. C1

ISSUED BY J. Bohun X1392 SECTION Equip Lines (VD1) GROUP NO. 332 PL 25

01 NAS 9-1100

B

ENG 32.1 REV 3-65

FITH

GRUMMAN AIRCRAFT ENGINEERING CORP.
CODE IDENT NO. 26512

ENGINEERING ORDER

DWG. NO. LDW280-51608
EO NO. C2
CONTROL INFO NO. LDW280A-6844

IN FIELD OF DWG & B/M DESCRIP OF E.O. *

ON-3 INSTL (SHEET 4 ZONE 4C)

LDW 280-17388-637 DSH-4
WAS
LDW 280-17388-347 DSH-4

DETAIL SPEC REQ ☐ CL II ENGRG CHG ☑ CL I ENGRG CHG ☐ LCD — 1244 5

REASON FOR EO: LINE HAD TO BE CHANGED FOR FITH REWORK

DESCRIPTION OF EO: NOTED ABOVE *

GAEC EO RELEASE: JK 5/13/67

MODEL	PROCURING ACTIVITY NO.	GAEC UNIT NO.	SUB CONTR UNIT NO.
LM		LM-1 (31)	

DRAWING CHANGE REQD: REVISE DWG ☑ RECORD EO ☐

DISPOSITION OF PARTS: REWORK ☑ SCRAP ☐

APPROVED BY	Jaf			JW	WJM			
DATE	5/10/67			5/10/67	5/12/67		5/13/67	5-13-67
1	VDI	SUPPORT	RELIAB. GROUP	GROUP LEADER	STRESS GROUP	LIAISON ENGRG	PROJ ENGRG	

PRIORITY: C

DRAWING TITLE: LINES INSTL PROPULSION & He PRESSURIZATION - D/S

DRAWING NO.: LDW280 51608

EO NO.: C2

ISSUED BY K BIRKEL X1392 SECTION EQUIP LINES (VDI) GROUP NO. 332 PL 25

01

NAS 9-1100

B

ENG 32.1 REV 3-65

*

GRUMMAN AIRCRAFT ENGINEERING CORP.
CODE IDENT NO. 26512
ENGINEERING ORDER

DWG NO. DW280-51608
EO NO. C-3
CONTROL INFO NO. LM-5-15165

IN FLD & B/M (ON-1)

GP10N-99 (S/B) GP10N-44
(OXIDE SIDE)
REF

RELEASED BY LIAISON

DETAIL SPEC REQ	☐	CL II ENGRG CHG	☑	CL I ENGRG CHG	☐

REASON FOR EO: TO BALANCE NEW DES STG ENGINE

DESCRIPTION OF EO: IN FLD & B/M (ON-1) GP10N-44 (WAS) GP10N-99

GAEC EO RELEASE: 5 C

MODEL	PROCURING ACTIVITY NO.	GAEC UNIT NO.	SUB CONTR UNIT NO.
LM		LM1 (31)	

DRAWING CHANGE REQD: REVISE DWG ✓ RECORD EO
DISPOSITION OF PARTS: REWORK ✓ SCRAP

APPROVED BY	JaP			~	JAJ	EVB	DAM	
DATE	7/6/67			~	5-23-67	5/22/67	5-25-67	7/2/67
1	UDI	SUPPORT	RELIAB. GROUP	GROUP LEADER	STRESS GROUP	LIAISON ENGRG	PROJ ENGRG	

PRIORITY: C
DRAWING TITLE: LINES INSTL PROP. & PRESS SYS DESCENT STAGE
DRAWING NO.: LDW280-51608
EO NO.: C-3

ISSUED BY LIAISON MDREYES X6416 SECTION VDI / J. WOLF GROUP NO. 335 PL 25

01 NAS 9-1100

ENG 32.1 REV 3-65

FITH

GRUMMAN AIRCRAFT ENGINEERING CORP.
CODE IDENT NO. 26512
ENGINEERING ORDER

DWG. NO. LDW280-51608
EO NO. C4
CONTROL INFO NO. LDW280A 7248

DESCRIPTION OF E.O.
REVISED EO C1 & EO C2

CALLOUT "ON-1 INSTL"
WAS
"ON-3 INSTL"

DETAIL SPEC REQ		CL II ENGRG CHG	✓	CL I ENGRG CHG		LCD-1244

REASON FOR EO: ENG ERROR

DESCRIPTION OF EO: NOTED ABOVE

GAEC C EO RELEASE: JK 6/5/67

MODEL	EFFECTIVITY: PROCURING ACTIVITY NO.	GAEC UNIT NO.	SUB CONTR UNIT NO.
LM		LM 1 (31)	

DRAWING CHANGE REQD: REVISE DWG	RECORD EO	DISPOSITION OF PARTS: REWORK	SCRAP
✓		NOT	REQD

	1	VDI	SUPPORT	RELIAB. GROUP	GROUP LEADER	STRESS GROUP	LIAISON ENGRG	PROJ ENGRG	
APPROVED BY					JW	N/A			Bott.
DATE	6/1/67				6/1/67	6/2/67		6/3/67	6.3.67

PRIORITY: C
DRAWING TITLE: LINES INSTL PROPULSION & PRESS. SYSTEM D/S
DRAWING NO.: LDW280-51608
EO NO.: C4

ISSUED BY J. Bohun x1392 SECTION Equip Lines (VDI) GROUP NO. 332 PL 25

01

NAS 9-1100

ENG 32.1 REV 3-65

GRUMMAN AIRCRAFT ENGINEERING CORP.
CODE IDENT NO. 26512
ENGINEERING ORDER *

DWG. NO. LDW280-51608
EO NO. C5
CONTROL INFO NO. LM83-1225

IN B/M, Sheet 2.06 change

As Req'd MS20995C32 E Lockwire Std. Part

to:

As Req'd MS20995NC32 E Lockwire Std. Part

DETAIL SPEC REQ	☐	CL II ENGRG CHG	☒	CL I ENGRG CHG	☐

83

REASON FOR EO: Correct drawing callout.

DESCRIPTION OF EO: Drawing Corr. Change B/M Lockwire callout from MS 20995C32 to MS20995NC32

GAEC EO RELEASE: c JK

MODEL	EFFECTIVITY: PROCURING ACTIVITY NO.	GAEC UNIT NO.	SUB CONTR UNIT NO.
LM	NOT REQD		

DRAWING CHANGE REQD: REVISE DWG ✓ RECORD EO

DISPOSITION OF PARTS: Not Reqd. REWORK SCRAP

APPROVED BY	Plunkett	JAP		W.D.			Plunkett	
DATE	27 June	7/18/67		6/27/67			27 June	6-28
6	SYS	VOL	RELIAB. GROUP	GROUP LEADER	STRESS GROUP	LIAISON ENGRG	PROJ ENGRG	

PRIORITY: E

DRAWING TITLE: Lines Installation Propulsion & Press. System Descent Stage

DRAWING NO.: LDW280-51608

EO NO.: C5

ISSUED BY PE. Klug SECTION Proj. Eng. GROUP NO. 812 PL 83

01 NAS 9-1100

ENG 32.1 REV 3-65

GRUMMAN AIRCRAFT ENGINEERING CORP.
CODE IDENT NO. 26512
ENGINEERING ORDER *

DWG. NO. LDW280-51608 | EO NO. C6
CONTROL INFO NO. LDW280A-8073

ON-1 INSTL

IN FIELD OF DWG, SHEET 5. ZONES 16B, 13A, 13C & 12B
NAS 673 V3H (16 REQ'D) SEE NOTE *
WAS
NAS673V3H (16 REQD)

IN B/M - SHEET 2.06
NAS673V3H '64 ON-1, ADD: SEE NOTE *

ADD NOTE *
NAS 673 V3H BOLT IS TO BE DRY LUBED IN ACCORDANCE WITH LPC 280-40.

DETAIL SPEC REQ ☐ CL II ENGRG CHG ☐ CL I ENGRG CHG ☑ LCD 1894 5

REASON FOR EO	DESCRIPTION OF EO	GAEC EO RELEASE
REDUCE PROPELLANT LEAKAGE	ON-1 ADDED NOTE * (REF NAS 673 V3H)	VK 7/21/7

MODEL	PROCURING ACTIVITY NO.	GAEC UNIT NO.	SUB CONTR UNIT NO.	REVISE DWG	RECORD EO	REWORK	SCRAP
LM		LM-1(31)		✓		✓	

APPROVED BY			SUPPORT	RELIAB. GROUP	GROUP LEADER	STRESS GROUP	PROJ KSC	PROJ ENGRG	~~GOVT~~
DATE	7/20/67				4/19/67		HRG 7/20	7/20/67	
1	VDI								

PRIORITY C | DRAWING TITLE LINES INSTL PROPULSION & PRESS SYSTEM D/S | DRAWING NO. LDW280-51608 | EO NO. C6

ISSUED BY J. Bohun X1392 SECTION Equip Lines (VDI) GROUP NO. 332 PL 25

01 NAS 9-1100

ENG 32.1 REV 3-65

GRUMMAN AIRCRAFT ENGINEERING CORP.
CODE IDENT NO. 26512
ENGINEERING ORDER

*

DWG. NO. LDW280-51608
EO NO. C7
CONTROL INFO NO. LDW280A 8077

DESCRIPTION OF EO

IN FIRST SENTENCE OF NOTE *
TORQUE TANK BOLTS NAS 673V3H TO 32-35 IN. LBS. WAS 45 TO 48 IN. LBS.

SECOND SENTENCE OF NOTE *
ADD: "DO NOT APPLY ANY LUBRICANT OVER THE BAKED ON DRY FILM LUBRICANT."
WAS: "LUBRICATE ALL THREADS----- BEFORE INSTALLING."
IN NOTE "b" 10 IN. LBS. WAS 15 IN. LBS.
IN NOTE "C" 20 IN. LBS. WAS 30 IN. LBS.
IN NOTE "d" 32-35 IN. LBS WAS 45-48 IN. LBS.

ADD NOTE ** AFTER INITIAL INSTALLATION, EACH BOLT PATTERN MUST BE RETORQUED IN THE TIGHTENING DIRECTION AND IN SEQUENCE TO PRINT VALUES AT 72 HR. INTERVALS. REPEAT TWICE, I.E., THE INITIAL INSTL. PLUS TWO RETORQUES.

DETAIL SPEC REQ	☐	CL II ENGRG CHG	☐	CL I ENGRG CHG	☑	LCD 1894	5

REASON FOR EO	DESCRIPTION OF EO	GAEC EO RELEASE
TO REDUCE PROPELLANT SYSTEM LEAKAGE.	NOTED	JC 7/21/67

MODEL	EFFECTIVITY		
	PROCURING ACTIVITY NO.	GAEC UNIT NO.	SUB CONTR UNIT NO.
LM		LM-1 (31)	

DRAWING CHANGE REQD		DISPOSITION OF PARTS									
REVISE DWG	RECORD EO	REWORK	SCRAP		VDI	SUPPORT	RELIAB. GROUP	GROUP LEADER	STRESS GROUP	PROJ KSC	PROJ ENGRG	~~CONT~~
✓		✓		APPROVED BY	JAP			JAP				RL
				DATE	7/20/67			7/20/67		HRG	7/20	7/20/67

PRIORITY	DRAWING TITLE	DRAWING NO.	EO NO.
C	LINES INSTL. PROPULSION & PRESS. SYSTEM D/S.	LDW280-51608	C7

ISSUED BY J. PUSATERI 1392 SECTION VEH. DESIGN INT. GROUP NO. 335 PL 25

01

NAS 9-1100

B

ENG 32.1 10-63

GRUMMAN AIRCRAFT ENGINEERING CORP.
CODE IDENT NO. 26512
ENGINEERING ORDER

DWG. NO. LDW280-51608		EO NO. C8	
CONTROL INFO NO. LDW280A5235			

ON SHT 6.00 ZONE 22 B REVISE FIELD AS SHOWN ON-1

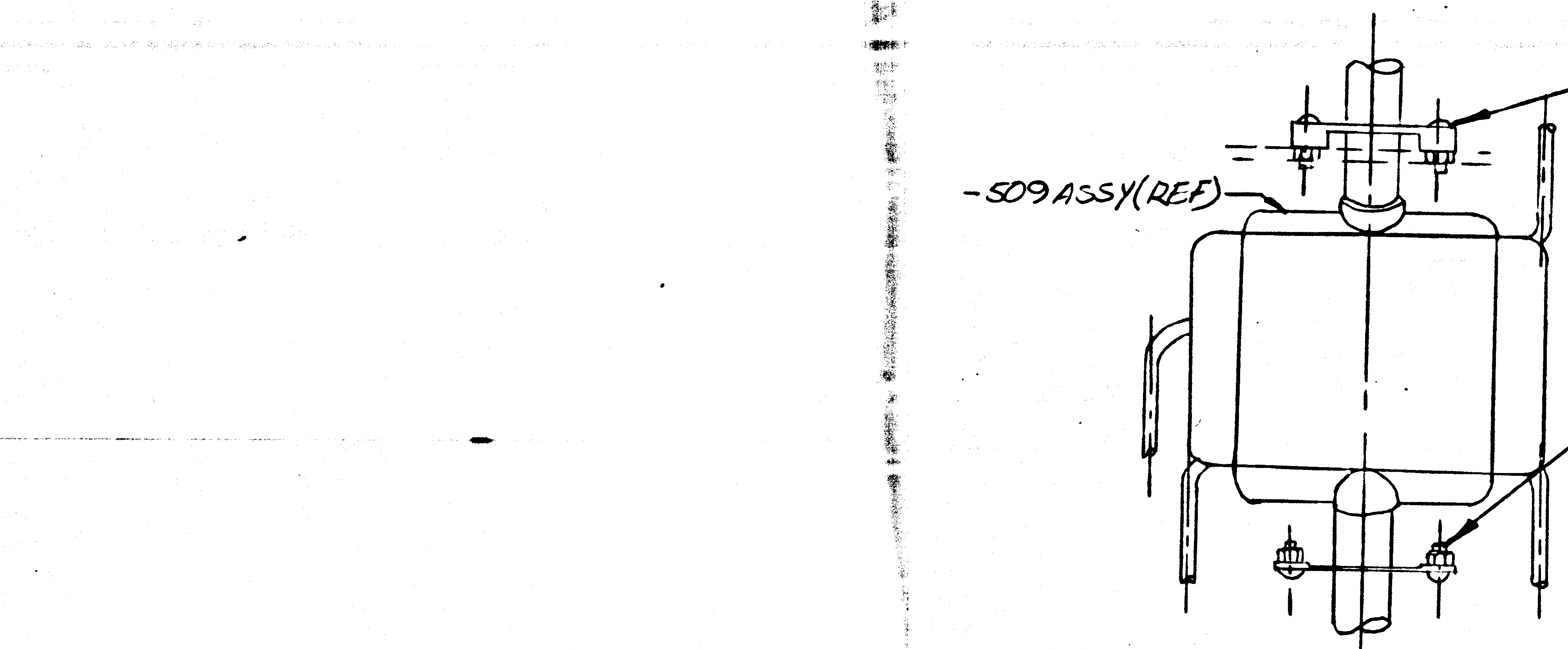

-509 ASSY (REF)

(ADD) GB511J-3-9(2)
MS21043-3(2)

(REVISE CALLOUT)
GB511J-3-3(2) WAS (4)
MS21043-3(2) WAS (4)

DETAIL SPEC REQ	☐	CL II ENGRG CHG	☐	CL I ENGRG CHG	✓	LCD 1935 LFM 30

REASON FOR EO: TO ACCOMODATE HEAT EXCHANGER REINFORCEMENT ASSY

DESCRIPTION OF EO: SHT 6.00 ZONE 22B ON-1
IN B/M & FIELD GB511J-3-3 (2) WAS (4)
ADDED GB511J-3-9(2)

GAEC EO RELEASE: C JK 7/31/67

MODEL	EFFECTIVITY ~~PROCURING ACTIVITY NO~~ E.I	GAEC UNIT NO.	SUB CONTR UNIT NO.
LM	LFM-30	LM1(31)	

DRAWING CHANGE REQD		DISPOSITION OF PARTS	
✓ REVISE DWG	RECORD EO	✓ REWORK	SCRAP

APPROVED BY	KB	[illegible]		[illegible]	TCJ	EWK FOR HRG	MHD	[illegible]
DATE	7/21/67	7/26		7/26/67	7-31-67	PROJ KSC	7/21/67	7-31-67
	PROD	VDI	RELIAB. GROUP	GROUP LEADER	STRESS GROUP	ENGRG	PROJ ENGRG	

PRIORITY	DRAWING TITLE	DRAWING NO.	EO NO.
C	LINES INSTALLATION - PROPULSION & ~~PRESSURIZA~~-TION SYSTEM DESCENT STAGE	LDW280-51608	C8

ISSUED BY J. PAVLICA X1471 GROUP LM PROPULSION PLT 25 DEPT 357

ENG 32.1 REV 3-65

GRUMMAN AIRCRAFT ENGINEERING CORP.
CODE IDENT NO. 26512
ENGINEERING ORDER

DWG. NO. LDW280-51608
EO NO. C9
CONTROL INFO NO. LDW280 A 8397

*

DESCRIPTION OF EO

NOTE *
IN NOTE "d" REMOVE "FOR FINAL TORQUE SAFETY WIRE PER MS33540 USING MS20995 NC32 LOCKWIRE

ADD "e" REPEAT STEP "b" APPLYING 45-48 IN. LBS FOR FINAL TORQUE. SAFETY WIRE PER MS33540 USING MS20995NC32 LOCKWIRE

DETAIL SPEC REQ		CL II ENGRG CHG		CL I ENGRG CHG	✓ LCD 1894 ok

GAEC EO RELEASE: 5 C 8/7

REASON FOR EO: TO REDUCE PROPELLANT SYSTEM LEAKAGE

DESCRIPTION OF EO: NOTED ABOVE

MODEL	EFFECTIVITY: PROCURING ACTIVITY NO.	GAEC UNIT NO.	SUB CONTR UNIT NO.
LM		LM-1 (31)	

DRAWING CHANGE REQD: REVISE DWG	RECORD EO	DISPOSITION OF PARTS: REWORK	SCRAP
✓		✓	

		SUPPORT	RELIAB. GROUP	GROUP LEADER	STRESS GROUP	~~LIAISON~~ ENGRG	PROJ ENGRG	GOVT
APPROVED BY	JaP			—		RLT FOR HGS	Jue	Bott
DATE	8/3/67 VIII			—	8/4/67	PEL KSC	8/4	8-5-67

PRIORITY	DRAWING TITLE	DRAWING NO.	EO NO.
C	LINES INSTL. PROPULSION & PRESS. SYSTEM D/S	LDW280-51608	C9

8/5
ISSUED BY BIRKEL X1392 SECTION VDI GROUP NO. 332 PL 25

01 NAS 9-1100

ENG 32.1 REV 3-65

C

GRUMMAN AIRCRAFT ENGINEERING CORP.
CODE IDENT NO. 26512
ENGINEERING ORDER

*

DWG. NO. LDW280-51608 | EO NO. C10
CONTROL INFO NO. LDW280A 8568

ON -1 INSTL
IN FIELD OF DWG SHEET 5 ZONE 11 A

CALLOUT LDW280-51608-13
MAKE FROM LDW270M10003-1
TRIM AS SHOWN
WAS
LDW280-51608-13
MAKE FROM LDW280M10003-1
TRIM AS SHOWN

DETAIL SPEC REQ	☐	CL II ENGRG CHG	☑	CL I ENGRG CHG	☐	5

REASON FOR EO: ENG. ERROR - CALLOUT CHANGED TO AGREE WITH B/M

DESCRIPTION OF EO: ON -1 INSTL IN FIELD - LDW270M10003-1 WAS LDW280M10003-1

Ⓡ GAEC EO RELEASE: C JK 8/12/67

MODEL	EFFECTIVITY: PROCURING ACTIVITY NO.	GAEC UNIT NO.	SUB CONTR UNIT NO.
LM		NOT REQD	

DRAWING CHANGE REQD: REVISE DWG	RECORD EO	DISPOSITION OF PARTS: REWORK	SCRAP
✓		NOT REQD	

APPROVED BY	[illegible]			JW	WJM		[illegible]	Bott.
DATE	8/10			8/10/67	8/10/67		8/10/67	8-12-67
1	VDI	SUPPORT	RELIAB. GROUP	GROUP LEADER	STRESS GROUP	LIAISON ENGRG	PROJ ENGRG	~~CONT~~

PRIORITY	DRAWING TITLE	DRAWING NO.	EO NO.
E	LINES INSTL PROPULSION & PRESS. SYSTEM D/S	LDW280-51608	C10

ISSUED BY J. Bohun X1392 SECTION Equip Lines (VDI) GROUP NO. 332 PL 25

01

NAS 9-1100

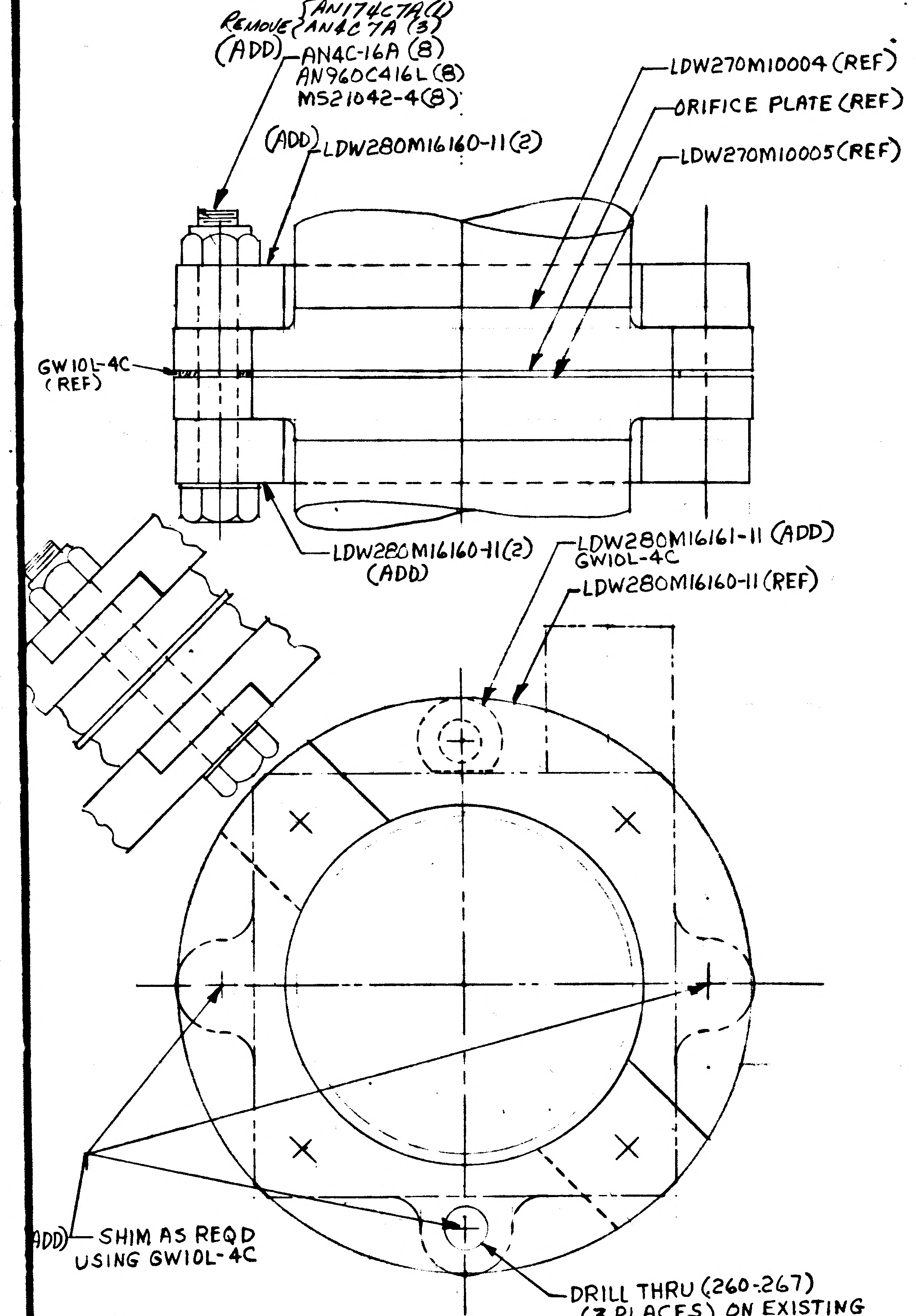
REMOVE {AN174C7A (1)
AN4C 7A (3)
(ADD) AN4C-16A (8)
AN960C416L (8)
MS21042-4 (8)
(ADD) LDW280M16160-11 (2)
LDW270M10004 (REF)
ORIFICE PLATE (REF)
LDW270M10005 (REF)
GW10L-4C (REF)
LDW280M16160-11 (2) (ADD)
LDW280M16161-11 (ADD)
GW10L-4C
LDW280M16160-11 (REF)
(ADD) SHIM AS REQD USING GW10L-4C
DRILL THRU (.260-.267) (3 PLACES) ON EXISTING IN-LINE FLANGES

(ADD) DETAIL ✱-✱

TYP 4 PLACES

GRUMMAN AIRCRAFT ENGINEERING CORP.
CODE IDENT NO. 26512
ENGINEERING ORDER

DWG. NO. LDW280-51608 EO NO. D1
CONTROL INFO NO. LDW28:A9026

ON-1 INSTL
IN FIELD OF DWG & B/M ADD LDW280M16160-11 (16 REQD), LDW280M16161-11 (4 REQD) & GW10L-4C SHIM (AS REQD). .040 MAX
REF:- SHEET 5 ZONE 14A & 15B SHEET 6 ZONE 22B & 23B

ON SHEET 3.01 ADD NOTE ⊕ FOR PROCEDURE ON INSTALLATION OF BACK-UP FLANGES (LDW280 M16160-11) 4 PLACES ON FUEL & OXIDIZER FEED LINES IN ENGINE BAY
(a) AFTER NOTE 11 HAS BEEN ACCOMPLISHED, WHICH STATES THE PROCEDURE FOR INSTALLING ORIFICE PLATES, THE BACK-UP FLANGES WILL BE INSTALLED.

(b) FOLLOWING THE TORQUE SEQUENCE AS OUTLINED ON DWG FIGURE 1, SHEET 5, ZONE 12B, INSTALL BOLTS AS SHOWN
1-TORQUE ALL BOLTS PER SEQUENCE TO 20 IN LBS AND REPEAT SEQUENCE UNTIL BOLTS DO NOT TURN WHEN 20 IN LBS IS APPLIED
2-REPEAT STEP "1" APPLYING 40 IN LBS.
3-REPEAT STEP "1" APPLYING 60 IN LBS.
4-REPEAT STEP "1" APPLYING 75 TO 85 IN LBS FOR FINAL TORQUE
(C)-AFTER INITIAL INSTL OF FINAL TORQUE, CHECK FOR FINAL TORQUE VALUE AFTER 72 HOURS USING PROCEDURE IN PARAGRAPH "b"
(D) REPEAT STEP "C" AGAIN 72 HOURS LATER TO COMPLETE INSTL.

ADD TO FIELD & B/M
AN4C-16A BOLTS (32)
AN960C416L WASHER (32)
MS21042-4 NUT (32)
REMOVE DETAIL "E" SHEET 5, ZONE 12B

✱-✱-USE NEXT HIGHEST SECT LETTER
⊕-USE NEXT HIGHEST NOTE NO

DETAIL SPEC REQ ☐ CL II ENGRG CHG ☐ CL I ENGRG CHG ✓ LCD 1894

REASON FOR EO: REDUCE PROPELLANT LEAKAGE

DESCRIPTION OF EO: ON-1 INSTL ADDED LDW280M16160-11 (16) LDW280M16161-11 (4), GW10L-4C, AN4C-16A (32) AN960-C416L (32) MS21042-4 (32). ADD DETAIL ✱-✱, NOTE ⊕ REMOVE DETAIL "E" FROM DWG

GAEC C EO RELEASE: K 7/31

MODEL	PROCURING ACTIVITY NO.	GAEC UNIT NO.	SUB CONTR UNIT NO.
	E1		
LM	LEM-31	LM1 (31)	

DRAWING CHANGE REQD: ✓ REVISE DWG ☐ RECORD EO
DISPOSITION OF PARTS: ✓ REWORK ☐ SCRAP

APPROVED BY		SUPPORT	RELIAB. GROUP	GROUP LEADER	STRESS GROUP		PROJ ENGRG	GOVT
DATE	8/31/67				7/1/67	RLT WRG	8/31	
	VDI							

PRIORITY: C
DRAWING TITLE: LINES INSTL PROPULSION & HELIUM PRESS SYS. D/S.
DRAWING NO.: LDW280-51608
EO NO.: D1

ISSUED BY J. Bohun X1392 SECTION Equip lines (VDI) GROUP NO. 332 PL 25

01 NAS 9-1100

ENG 32.2 REV 3-65 B

GRUMMAN AIRCRAFT ENGINEERING CORP.
CODE IDENT NO. 26512
ENGINEERING ORDER *

DWG. NO. LDW280-51608 | EO NO. D3
CONTROL INFO NO. LDW280A-9440

ADD NOTES

* INSTALL ORIFICE PLATE LDW280M16191 WITH ELECTRO ETCHED PART # FACING TOWARD ENGINE. STAKE IN PLACE PER 6469

** ON INSTALLATION RECORD DIM "A" & "B". AFTER INSTALLATION & BEFORE WELDING RECORD DIM "C" TOLERANCE ON DIM C IS TO BE "A" + "B" + .005 MAX.

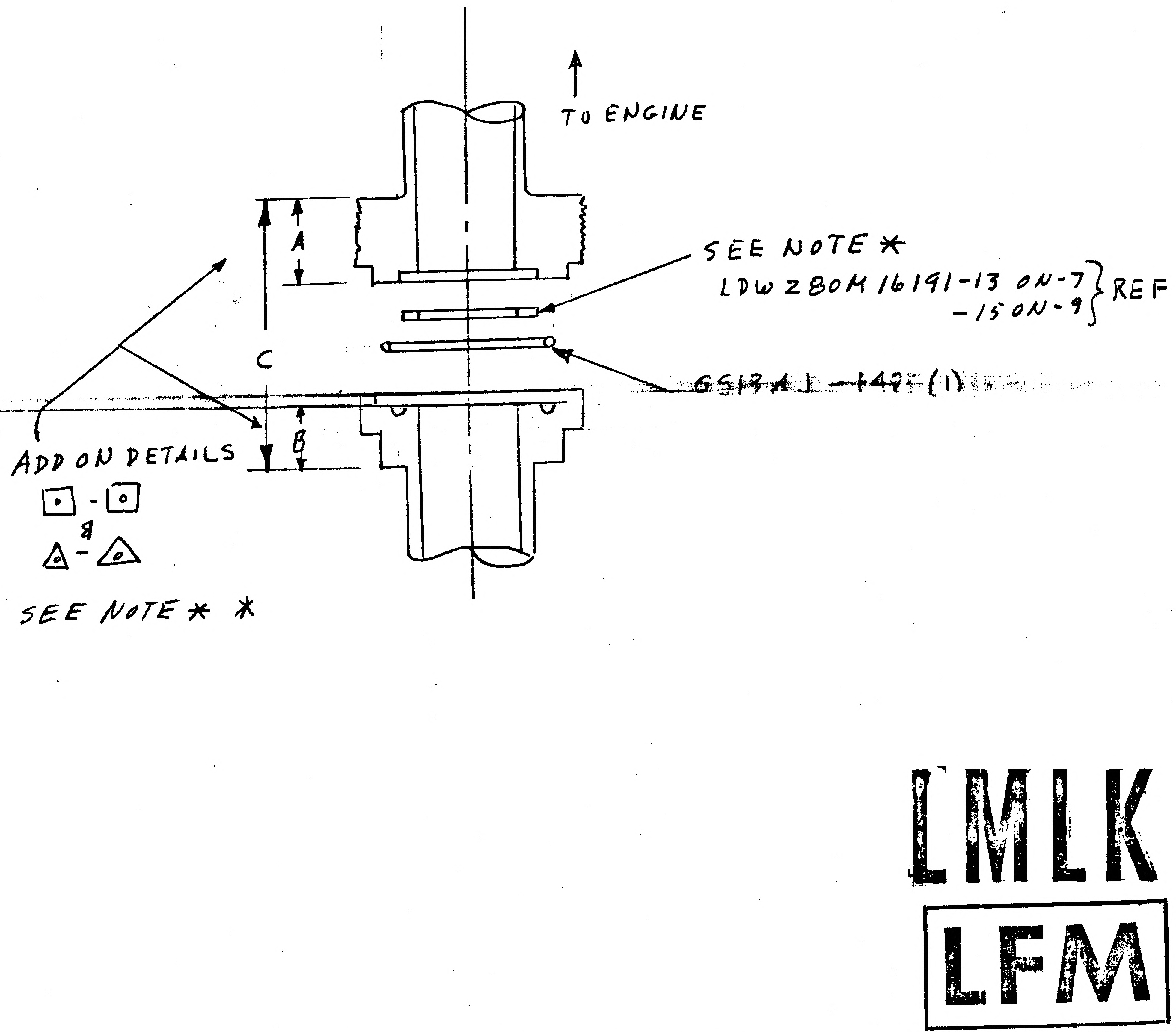

LMLK

LFM

DETAIL SPEC REQ		CL II ENGRG CHG		CL I ENGRG CHG	✓	LCD 1894

REASON FOR EO: TO REDUCE PROPELLANT LEAKAGE

DESCRIPTION OF EO: ADDED NOTES * & * * AND REVISED PICTURE OF DETAILS □-□ & △ △

Ⓡ GAEC EO RELEASE: JK 9/30/67

MODEL	EFFECTIVITY: PROCURING ACTIVITY NO.	GAEC UNIT NO.	SUB CONTR UNIT NO.
LM	LFM-31	LM-1(31)	

DRAWING CHANGE REQD: REVISE DWG	RECORD EO	DISPOSITION OF PARTS: REWORK	SCRAP
✓		✓	

APPROVED BY	JHN	gaP			JMS		BMS	KJ
DATE	9-28-67	9/29/67			9/28		9/28	9-29-67
		VDI	RELIAB. GROUP	GROUP LEADER	STRESS GROUP	LIAISON ENGRG	PROJ ENGRG	~~GOVT~~

PRIORITY: C
DRAWING TITLE: LINES INSTL PROPELLANT & PRESSURIZATION DESCENT STAGE
DRAWING NO.: LDW280-51608
EO NO.: D3

10/7
ISSUED BY K. BIRKEL X 1392 SECTION V.D.I (EQUIP LINES) GROUP NO. 332 PL 25

01
NAS 9-1100

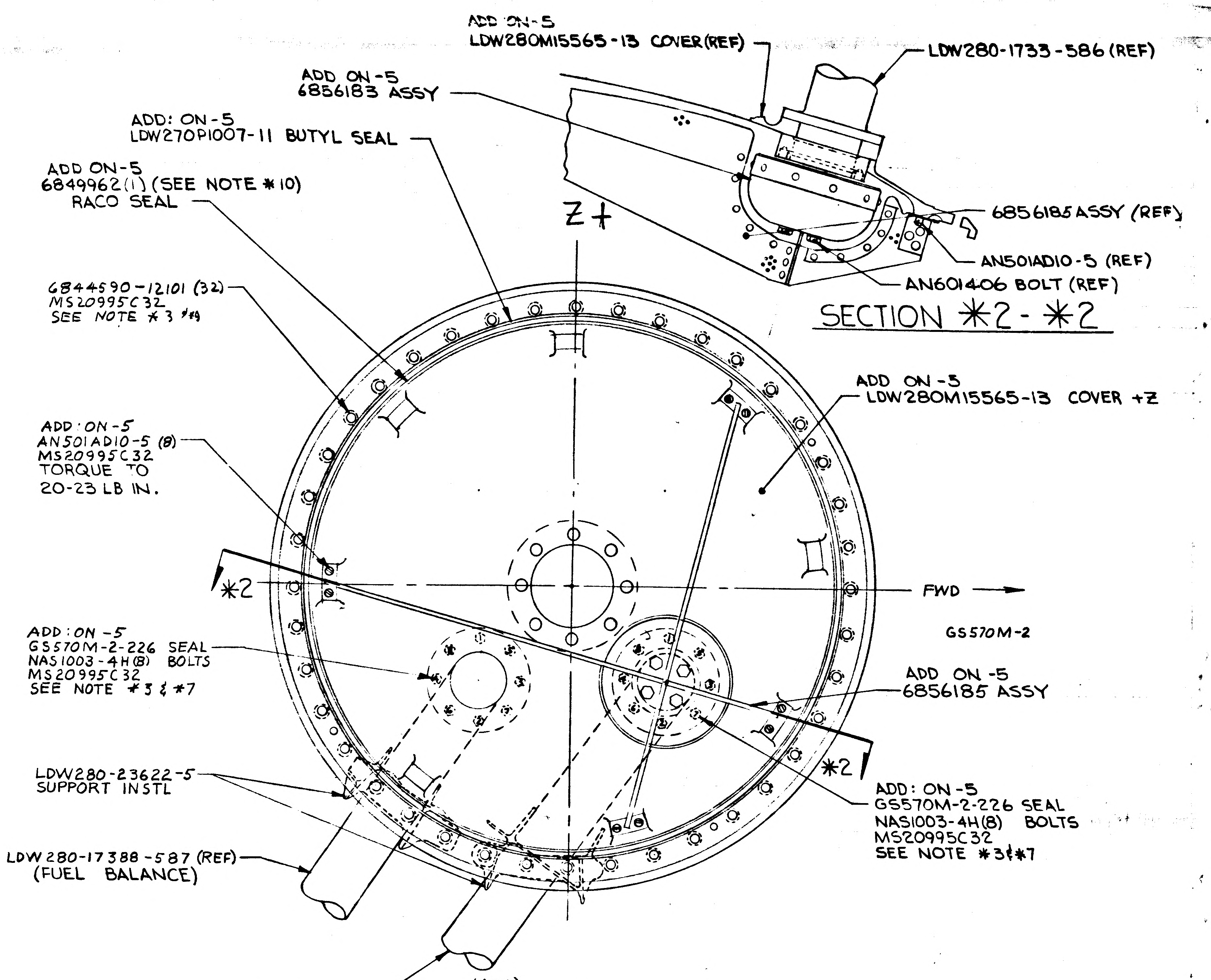
ADD ON-5
LDW280M15565-13 COVER(REF)
LDW280-1733-586 (REF)
ADD ON-5
6856183 ASSY
ADD: ON-5
LDW270P1007-11 BUTYL SEAL
ADD ON-5
6849962(1) (SEE NOTE *10)
RACO SEAL
Z+
6856185 ASSY (REF)
AN501AD10-5 (REF)
AN601406 BOLT (REF)
6844590-12101 (32)
MS20995C32
SEE NOTE *3 & *9
ADD ON -5
LDW280M15565-13 COVER +Z
ADD: ON-5
AN501AD10-5 (8)
MS20995C32
TORQUE TO
20-23 LB IN.
*2
FWD
GS570M-2
ADD: ON -5
GS570M-2-226 SEAL
NAS1003-4H(8) BOLTS
MS20995C32
SEE NOTE *3 & *7
ADD ON -5
6856185 ASSY
*2
LDW280-23622-5
SUPPORT INSTL
ADD: ON-5
GS570M-2-226 SEAL
NAS1003-4H(8) BOLTS
MS20995C32
SEE NOTE *3&*7
LDW280-17388-587 (REF)
(FUEL BALANCE)
LDW280-17388-586 (REF)
(FUEL FEED)

SECTION *2-*2

(ADD)
DETAIL *B (VIEW LOOKING DOWN) ®
+Z TANK

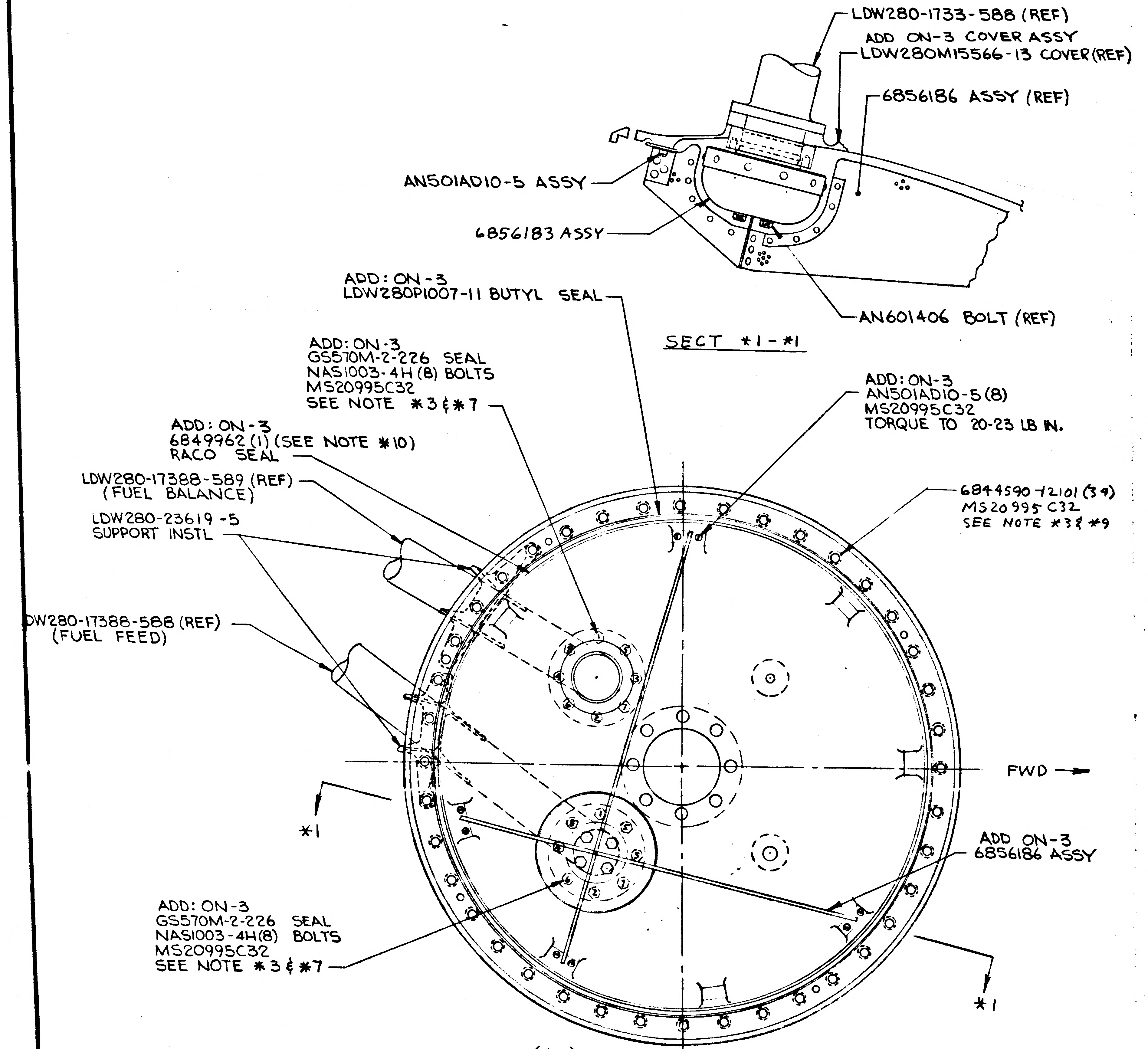
LDW280-1733-588 (REF)
ADD ON-3 COVER ASSY
LDW280M15566-13 COVER(REF)
6856186 ASSY (REF)
AN501AD10-5 ASSY
6856183 ASSY
AN601406 BOLT (REF)
ADD: ON-3
LDW280P1007-11 BUTYL SEAL
ADD: ON-3
GS570M-2-226 SEAL
NAS1003-4H (8) BOLTS
MS20995C32
SEE NOTE *3 & *7
ADD: ON-3
AN501AD10-5 (8)
MS20995C32
TORQUE TO 20-23 LB IN.
ADD: ON-3
6849962 (1) (SEE NOTE *10)
RACO SEAL
LDW280-17388-589 (REF)
(FUEL BALANCE)
LDW280-23619 -5
SUPPORT INSTL
6844590-12101 (34)
MS20995 C32
SEE NOTE *3 & *9
DW280-17388-588 (REF)
(FUEL FEED)
FWD
*1
ADD ON-3
6856186 ASSY
ADD: ON-3
GS570M-2-226 SEAL
NAS1003-4H(8) BOLTS
MS20995C32
SEE NOTE *3 & *7
*1

SECT *1-*1

(ADD)
DETAIL *C (VIEW LOOKING DOWN) ®
+Y TANK

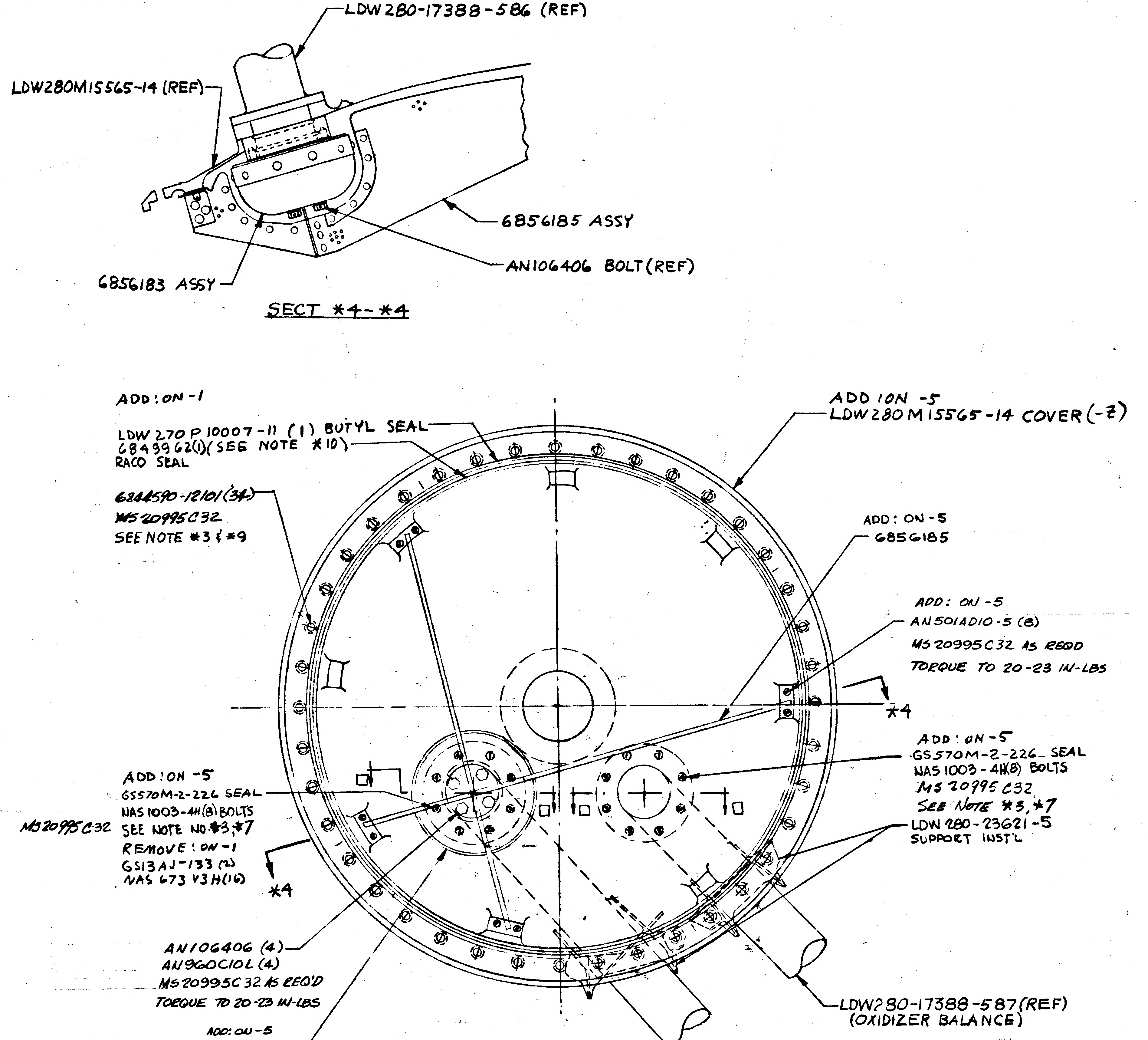
LDW280-17388-586 (REF)
LDW280M15565-14 (REF)
6856185 ASSY
AN106406 BOLT (REF)
6856183 ASSY
ADD: ON-1
LDW 270 P 10007-11 (1) BUTYL SEAL
6849962(1) (SEE NOTE *10)
RACO SEAL
ADD ON -5
LDW 280 M 15565-14 COVER (-Z)
6844590-12101(34)
MS 20995C32
SEE NOTE *3 & *9
ADD: ON-5
6856185
ADD: ON-5
AN501AD10-5 (8)
MS 20995C32 AS REQD
TORQUE TO 20-23 IN-LBS
*4
ADD: ON-5
GS570M-2-226 SEAL
NAS 1003-4H(8) BOLTS
MS 20995 C32
SEE NOTE *3, *7
LDW 280-23621-5
SUPPORT INST'L
ADD: ON -5
GS570M-2-226 SEAL
NAS 1003-4H(8) BOLTS
MS 20995 C32
SEE NOTE NO *3, *7
REMOVE: ON-1
GS13AJ-133 (2)
NAS 673 V3 H(16)
*4
AN106406 (4)
AN960C10L (4)
MS20995C32 AS REQ'D
TORQUE TO 20-23 IN-LBS
ADD: ON-5
6856183
LDW280-17388-587 (REF)
(OXIDIZER BALANCE)
LDW280-17388-586 (REF)
(OXIDIZER FEED)

SECT *4-*4

DETAIL *D (-Z)
(VIEW LOOKING DOWN) ®

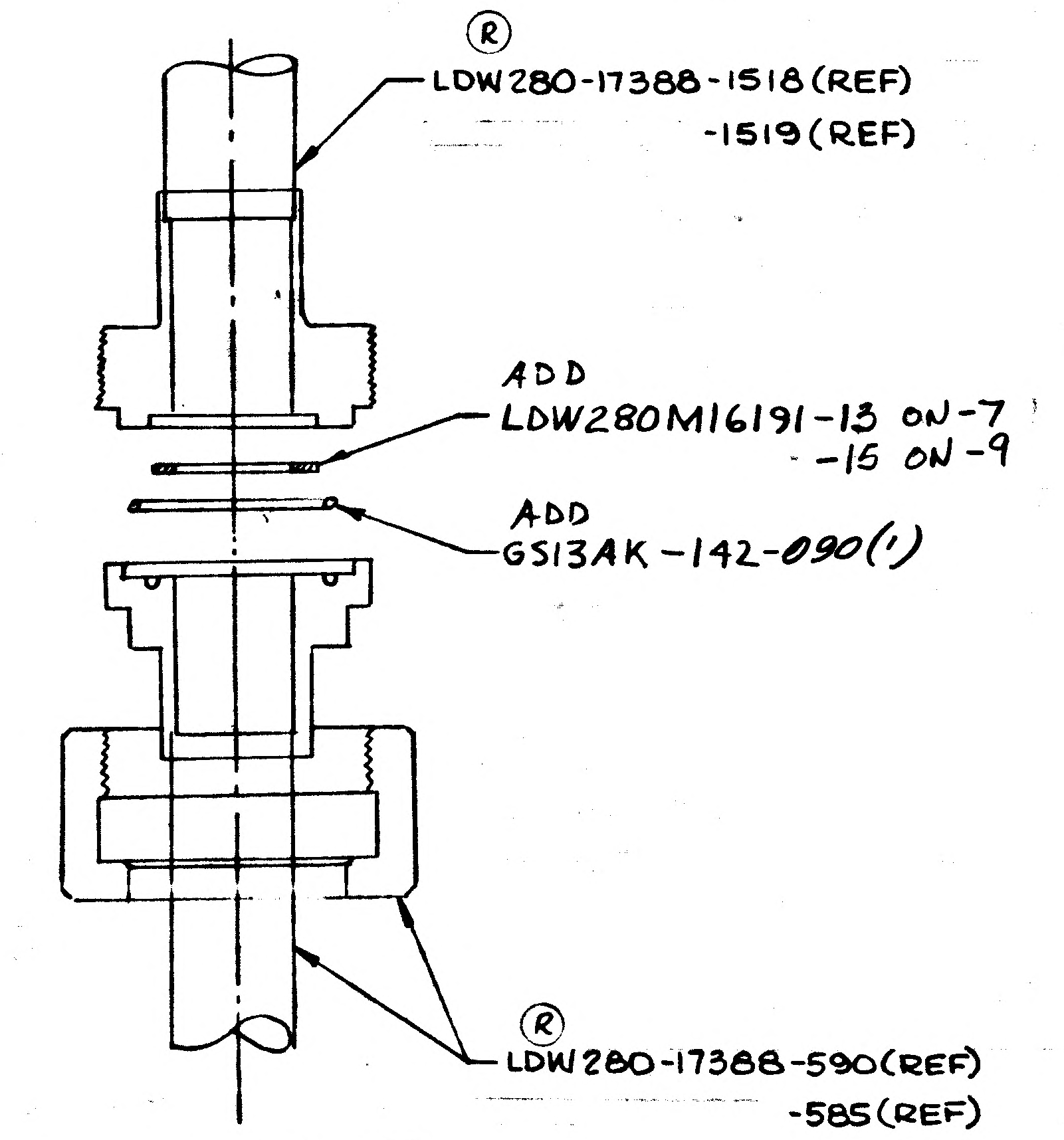
®
LDW280-17388-1518 (REF)
-1519 (REF)
ADD
LDW280M16191-13 ON-7
-15 ON-9
ADD
GS13AK-142-090(1)
®
LDW280-17388-590 (REF)
-585 (REF)

DETAIL ⊡-⊡
TYP 2 PLACES ON -7 & -9

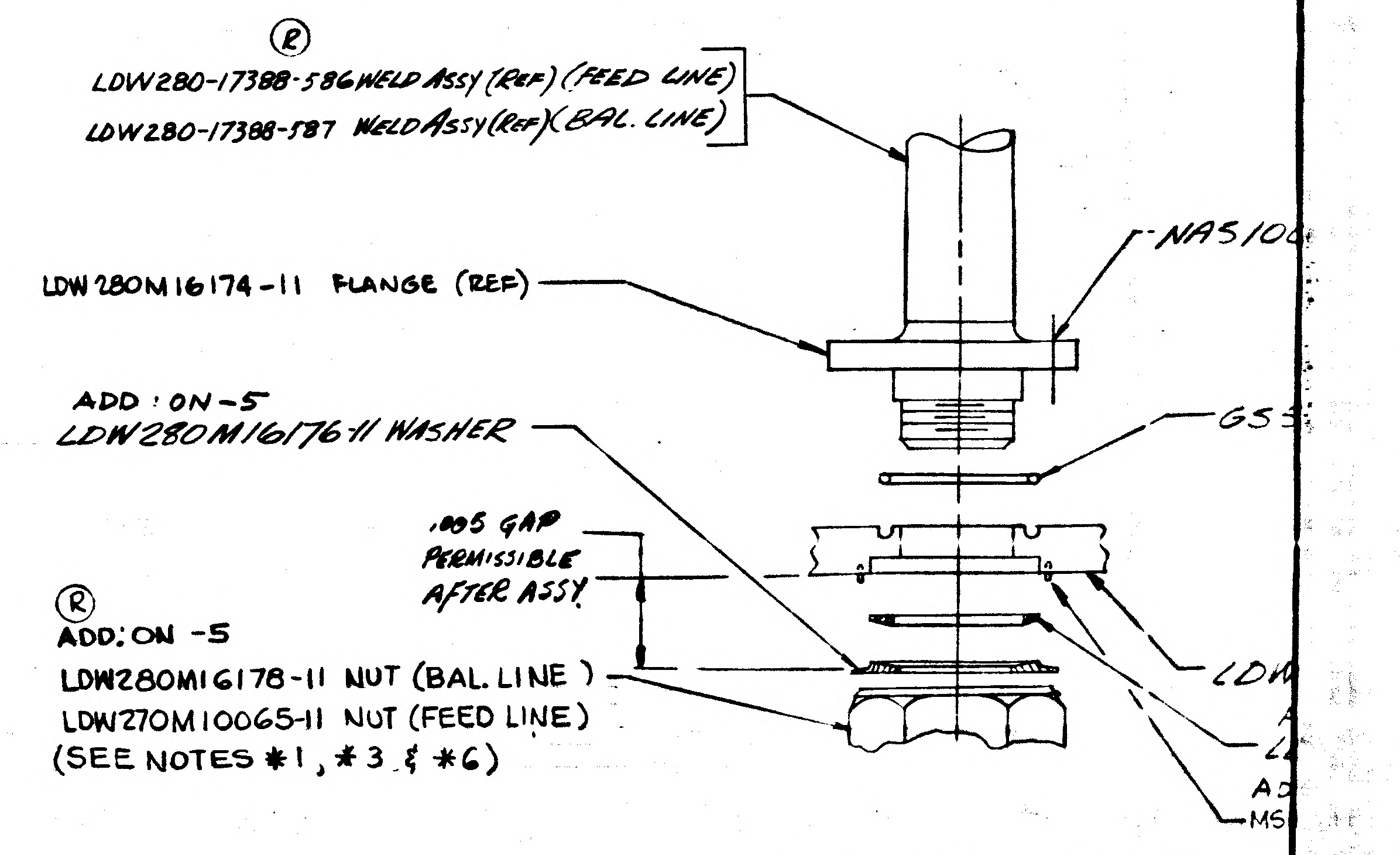
®
LDW280-17388-586 WELD ASSY (REF) (FEED LINE)
LDW280-17388-587 WELD ASSY (REF) (BAL. LINE)
NAS10
LDW280M16174-11 FLANGE (REF)
GS
ADD: ON-5
LDW280M16176-11 WASHER
.005 GAP
PERMISSIBLE
AFTER ASSY
®
ADD: ON -5
LDW280M16178-11 NUT (BAL. LINE)
LDW270M10065-11 NUT (FEED LINE)
(SEE NOTES *1, *3 & *6)
LDW
A
MS

ADD: VIEW □-□
(TYP 4 PLACES ON -5)

TYPICAL SECT THROUGH FEE
OXIDIZER +Z -Z

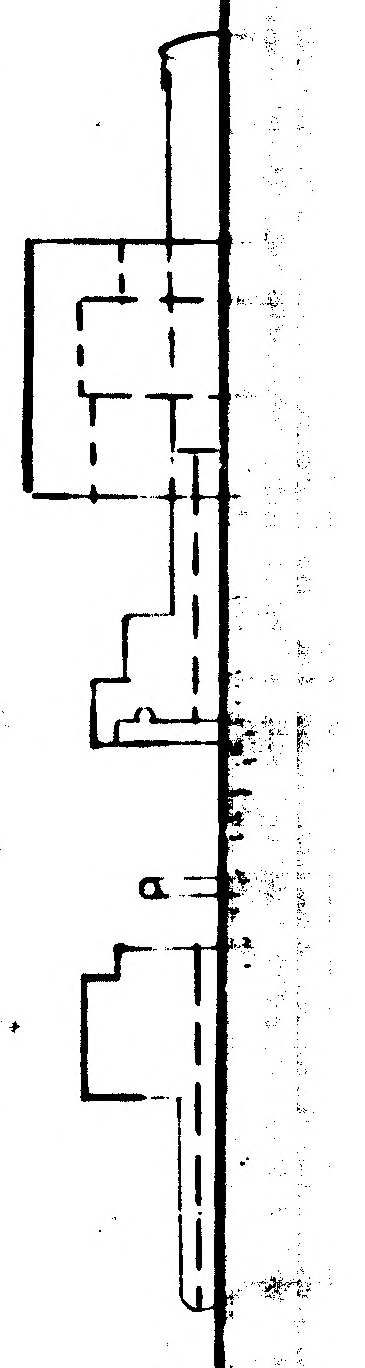

01/03
NAS 9-1100

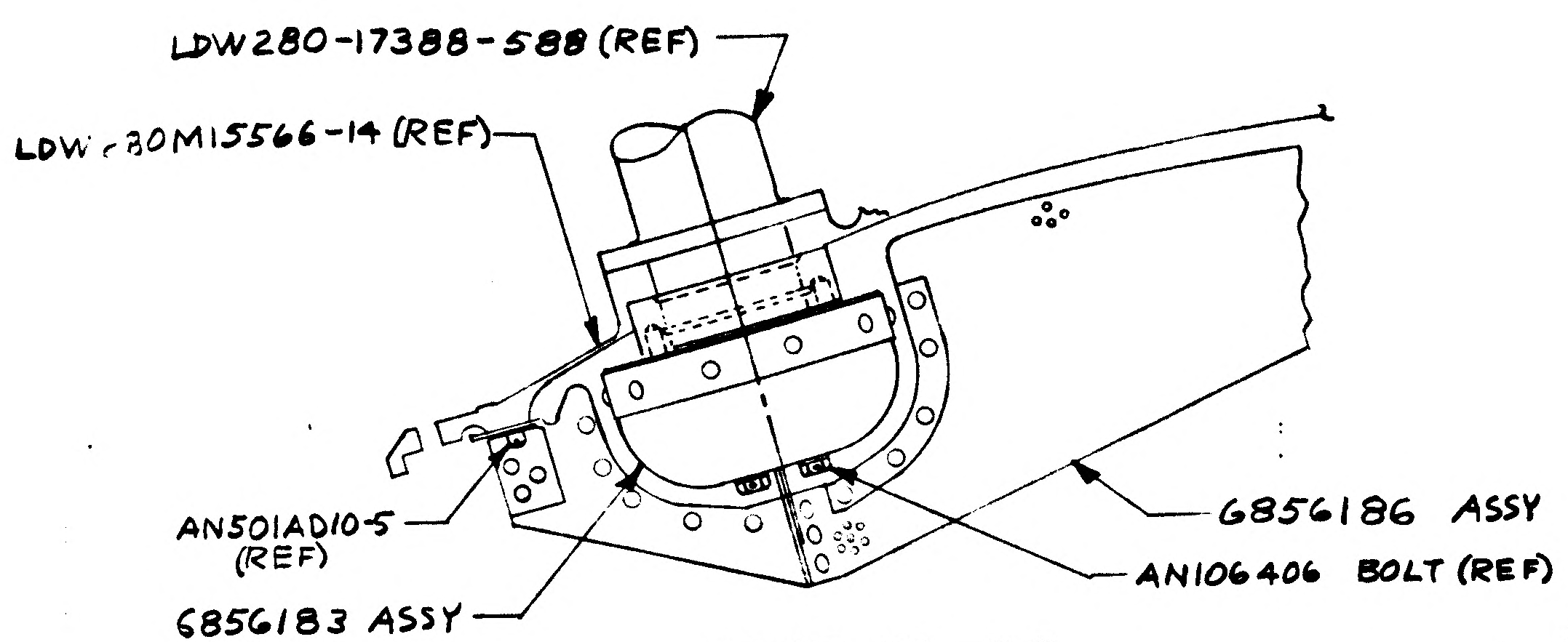
LDW280-17388-588 (REF)
LDW280M15566-14 (REF)
AN501AD10-5 (REF)
6856183 ASSY
6856186 ASSY
AN106406 BOLT (REF)

SECT *3 - *3

ADD (ON-3)
LDW 280M 15566-14 COVER (-Y)

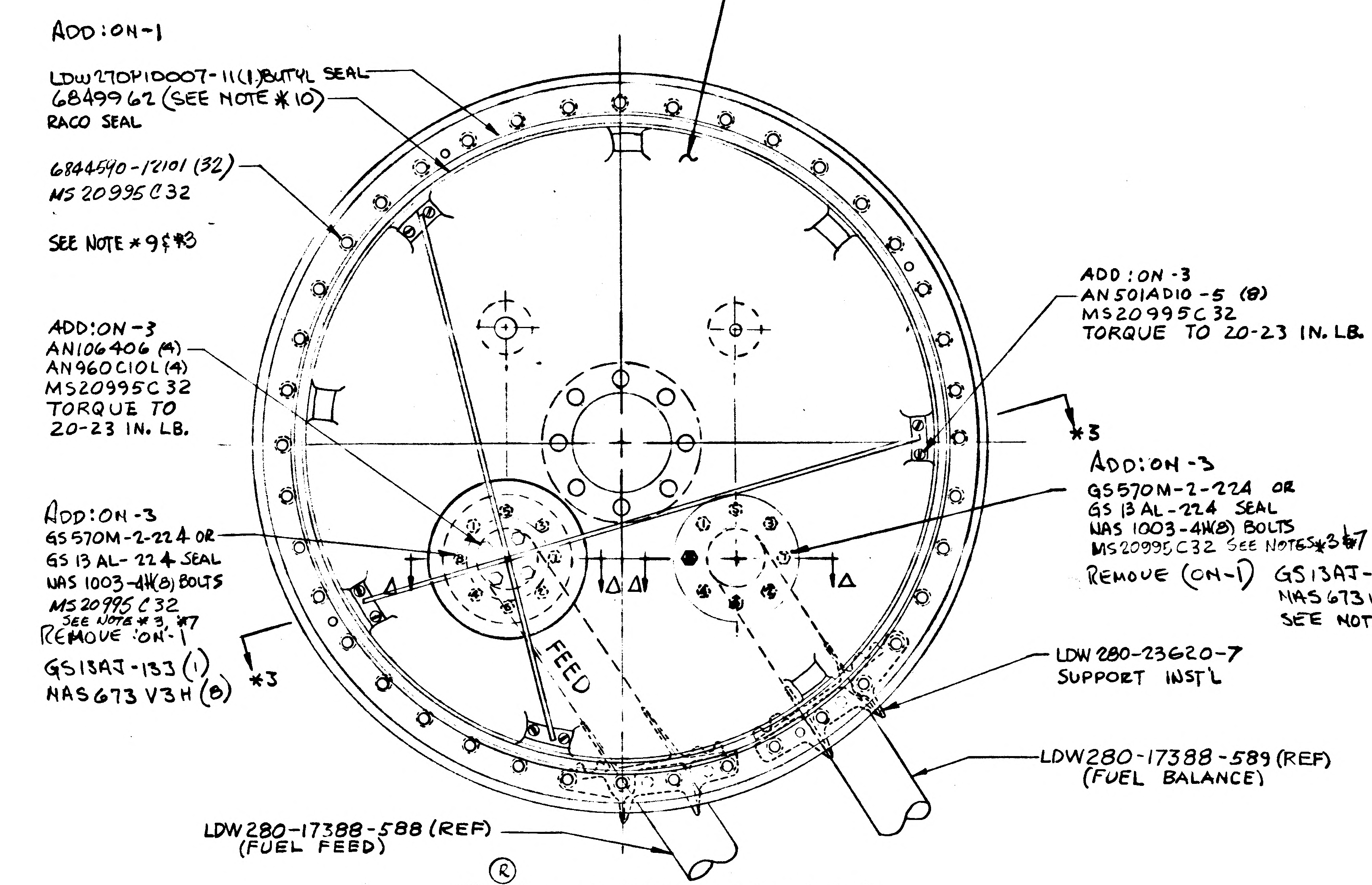
ADD: ON-1
LDW270P10007-11(1) BUTYL SEAL
6849962 (SEE NOTE *10)
RACO SEAL
6844590-12101 (32)
MS 20995 C32
SEE NOTE *9 & *3
ADD: ON-3
AN106406 (4)
AN960C10L (4)
MS20995C32
TORQUE TO
20-23 IN. LB.
ADD: ON-3
GS570M-2-224 OR
GS 13 AL-224 SEAL
NAS 1003-4H(8) BOLTS
MS 20995 C32
SEE NOTE *3, *7
REMOVE 'ON'-1
GS13AJ-133 (1)
NAS673 V3H (8)
*3
FEED
ADD: ON-3
AN501AD10-5 (8)
MS20995C32
TORQUE TO 20-23 IN. LB.
*3
ADD: ON-3
GS570M-2-224 OR
GS 13 AL-224 SEAL
NAS 1003-4H(8) BOLTS
MS20995C32 SEE NOTES *3 & 7
REMOVE (ON-1) GS13AJ-133 (1)
NAS673V3H (8)
SEE NOTE *4
LDW 280-23620-7
SUPPORT INST'L
LDW280-17388-589 (REF)
(FUEL BALANCE)
LDW280-17388-588 (REF)
(FUEL FEED)

Ⓡ DETAIL *A (ROTATED 90° CCW) (-Y)

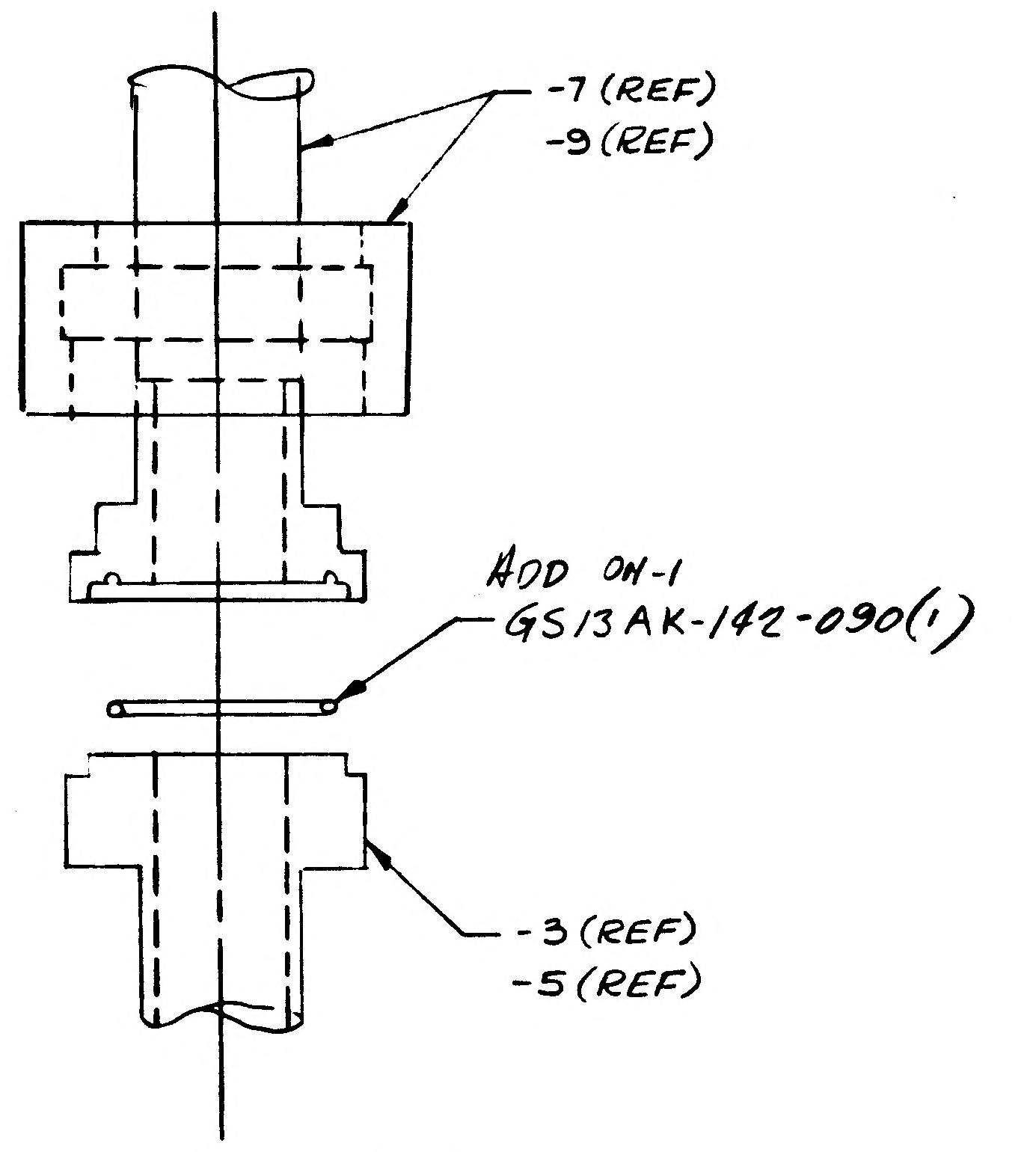
-7 (REF)
-9 (REF)
ADD ON-1
GS13AK-142-090(1)
-3 (REF)
-5 (REF)

ADD DETAIL △-△
TYP - 2 PLACES ON-1

Ⓡ

DESCRIPTION OF EO (CONT)

ON-1 INSTL ADDED GS13AK-142-090(2)
ON-3 INSTL ADDED LDW270 M10066-11 (2), 6856183 (2), AN106406 (8), AN 960C10L (8), LDW280M16193-13 (2)
ON-5 INSTL ADDED LDW 270 M 10065-11 (2), 6856183 (2), AN106406 (8), AN 960 C10L (8), LDW280M16193-13 (2)

DETAIL *A WAS DETAIL A OF EO D2 VIEW LKG UP TYP ±Y,
DETAIL *B WAS DETAIL B OF EO D2 VIEW LKG UP TYP ±Z

REMOVED NOTE *12 ADDED NOTE *13

ADDED DETAIL *C, *D, SECT *1-*1, *2-*2, *3-*3, *4-*4
ADDED .005 ALLOWABLE GAP TO VIEW △-△ & VIEW □-□

Ⓡ INDICATES REVISIONS TO EO D2

* USE NEXT AVAILABLE LETTER

NOTES:

*1. TIGHTEN NUT TO A TORQUE VALUE OF 225-250 FOOT LB (REF LDW 280M16178 & LDW 280M16179)
*2. TORQUE COUPLING NUTS PER LSP 14-17402.
*3. LOCKWIRE PER MS33540
Ⓡ *6 ON LDW270M10066-11 & LDW280M16179-11
LDW270M10065-11, & LDW280M16178-11
LUBRICATE ALL THREADS, BODY & FAYING SURFACES BEFORE INSTAL
WITH DU PONT PR-240 AC.
*7. TORQUE NAS 1003-4H BOLTS TO 45-48 INCH LB
INSTALL BOLTS FINGER TIGHT & TORQUE IN SEQUENCE AS FOLLOW
a.) PHYSICAL LOCATION FOR START OF SEQUENCE (BOLT NO. 1) IS OPTI
b.) TORQUE ALL BOLTS PER SEQUENCE TO 15 INCH LB AND REPEAT SEQUENCE UNTIL BOLTS DO NOT TURN WHEN 15 INCH POUNDS IS
c.) REPEAT STEP (b.) APPLYING 30 INCH POUNDS
d.) REPEAT STEP (b.) APPLYING 45-48 INCH LB FOR FINAL TORQU
*8. TORQUE TO 70-75 INCH POUNDS. INSTALL BOLTS AS PER PARAGRAPHS (a), (b) AND (c) OF NOTE *7 ABOVE, THEN REPEAT STEP (b) APPLYING 70-7 INCH POUNDS FOR FINAL TORQUE.
*9. STARTING AT ANY POINT, NUMBER THE BOLT POSITIONS CONSECUTIVELY FR 1 THRU 40. TIGHTEN ALL BOLTS FINGER TIGHT. TIGHTEN 16 BOLTS 1/8 PER BOLT IN THE SEQUENCE 1, 21, 11, 31, 6, 26, 16, 36, 9, 29, 19, 39, 4, 24, 14, FROM FINGER-TIGHT POSITION. REPEAT SEQUENCE UNTIL 70 INCH POUND T IS ATTAINED & IS RETAINED ON ALL 16 BOLTS. TIGHTEN ALL REMAINING BOLTS FINGER TIGHT. TORQUE ALL BOLTS TO 200 INCH-LB IN THE SEQUENCE: 1, 21, 11, 31, 6, 26, 16, 36, 9, 29, 19, 39, 4, 24, 14, 34, 7, 27, 17, 37, 2, 22, 12, 8, 28, 18, 38, 3, 23, 13, 33, 10, 30, 20, 40, 5, 25, 15, AND 35. REPEAT IN SAME SEQUENCE UNTIL TORQUE OF 200-210 INCH POUNDS IS MAINTAI
*10.- 6844590-12101-BOLT / 6849962 SEAL } IS PART OF LSC 280-4-51, -53, -55, & -57
*11.- TORQUE AN501AD10 TO 20-23 IN #s.
Ⓡ *13 - WELD PER MIL-W-8611

ADD TO NOTE 8. (EXCEPT AS NOTED)

ADD -3, -5, -7 -9 ASSEMBLIES AS NOTED
ADD VIEW △-△ & □-□ (USE NEXT AVAILABLE △-△ & □-□ SECTION LETTERS)
ADD NOTES *1, *2, *3, *6, *7, *8, *9, *10 & *11, & *12
ON-1 REMOVE LDW280-17388-582, -583, -585, -586, -587, -588, -589 & -590
ON-1 REMOVE GS13AJ-133 (4) & NAS673V3H (32).
REMOVE DETAIL E, FIGURE I & -13 (2)
ADD ON-1 GS13AJ-142 (2)

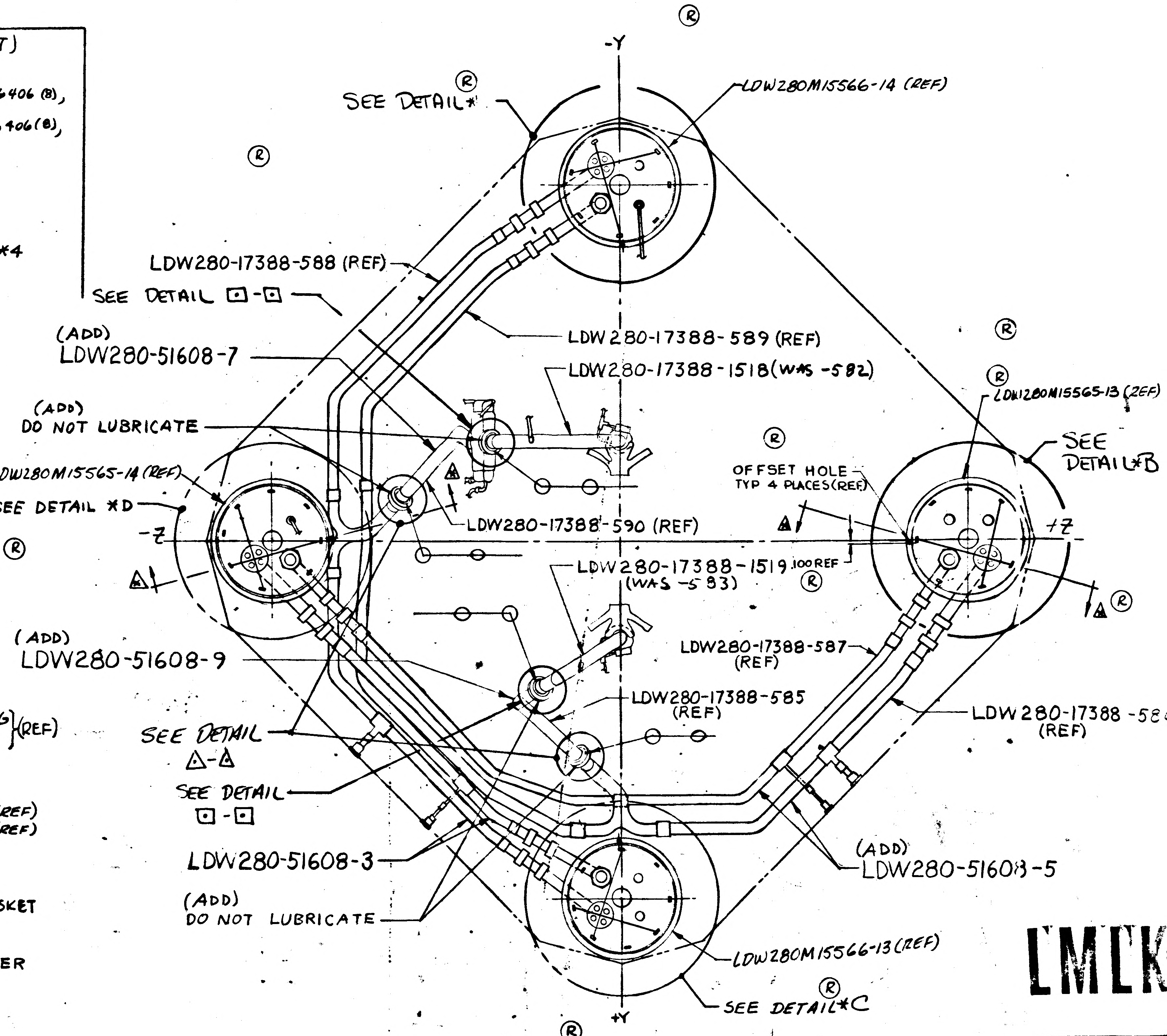
-Y
SEE DETAIL*
LDW280M15566-14 (REF)
LDW280-17388-588 (REF)
SEE DETAIL □-□
LDW280-17388-589 (REF)
(ADD)
LDW280-51608-7
LDW280-17388-1518 (WAS -582)
LDW280M15565-13 (REF)
(ADD)
DO NOT LUBRICATE
SEE DETAIL *B
LDW280M15565-14 (REF)
OFFSET HOLE TYP 4 PLACES (REF)
SEE DETAIL *D
-Z
LDW280-17388-590 (REF)
+Z
LDW280-17388-1519 (WAS -583)
.100 REF
(ADD)
LDW280-51608-9
LDW280-17388-587 (REF)
LDW280-17388-585 (REF)
LDW280-17388-58 (REF)
SEE DETAIL △-△
SEE DETAIL □-□
LDW280-51608-3
(ADD)
LDW280-51608-5
(ADD)
DO NOT LUBRICATE
LDW280M15566-13 (REF)
SEE DETAIL *C
+Y

LDW 280-51608-1 (REF)
(VIEW LOOKING DOWN)

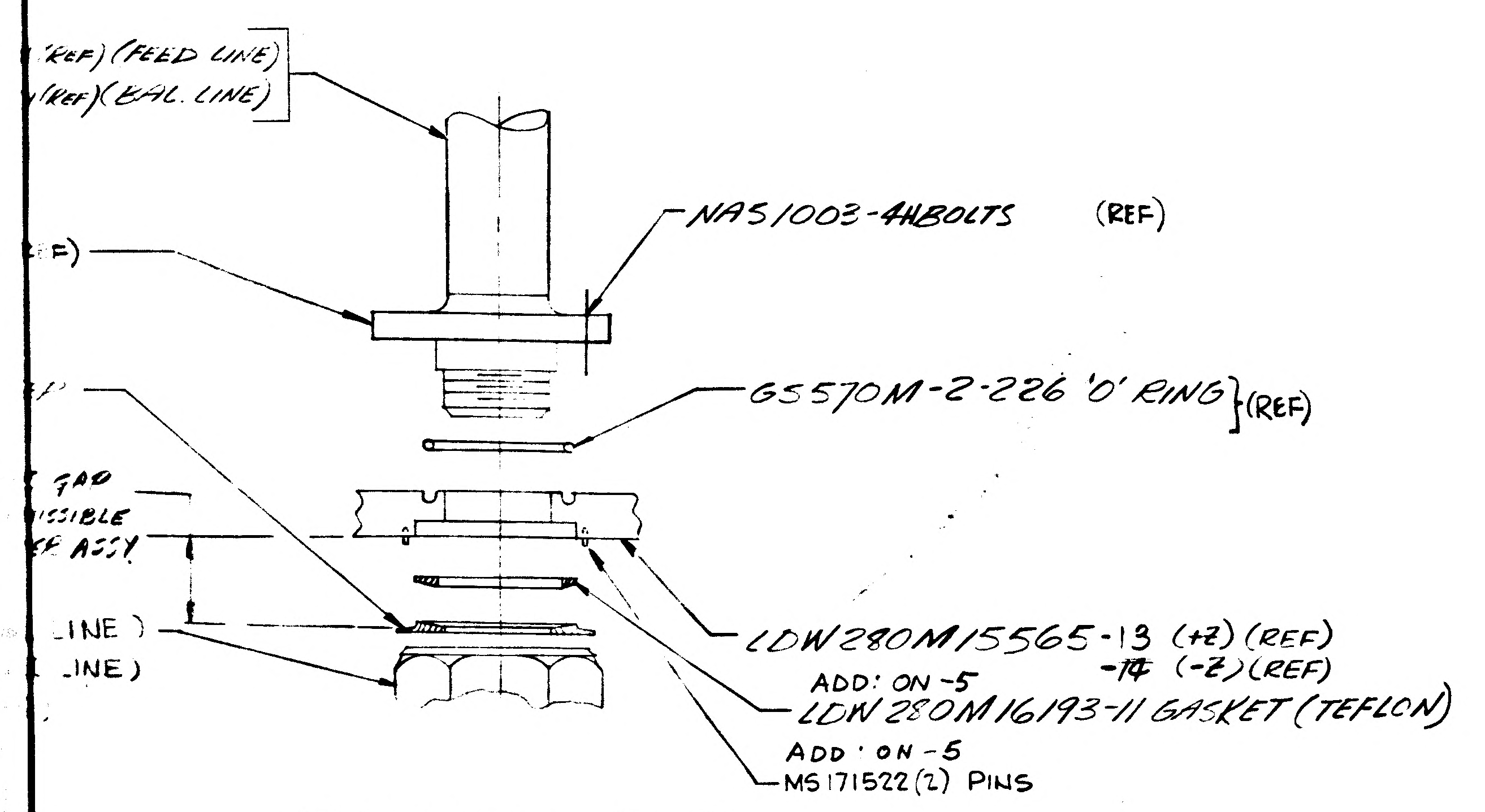
(REF) (FEED LINE)
(REF) (BAL. LINE)
NAS1003-4H BOLTS (REF)
GS570M-2-226 'O' RING (REF)
GAP
PERMISSIBLE
AFTER ASSY
LINE)
LINE)
LDW280M15565-13 (+Z) (REF)
-14 (-Z) (REF)
ADD: ON-5
LDW280M16193-11 GASKET (TEFLON)
ADD: ON-5
MS171522 (2) PINS

ADD: VIEW □-□
(TYP 4 PLACES ON-5)

TYPICAL SECT THROUGH FEED & BALANCE LINES
OXIDIZER +Z -Z TANK BAY

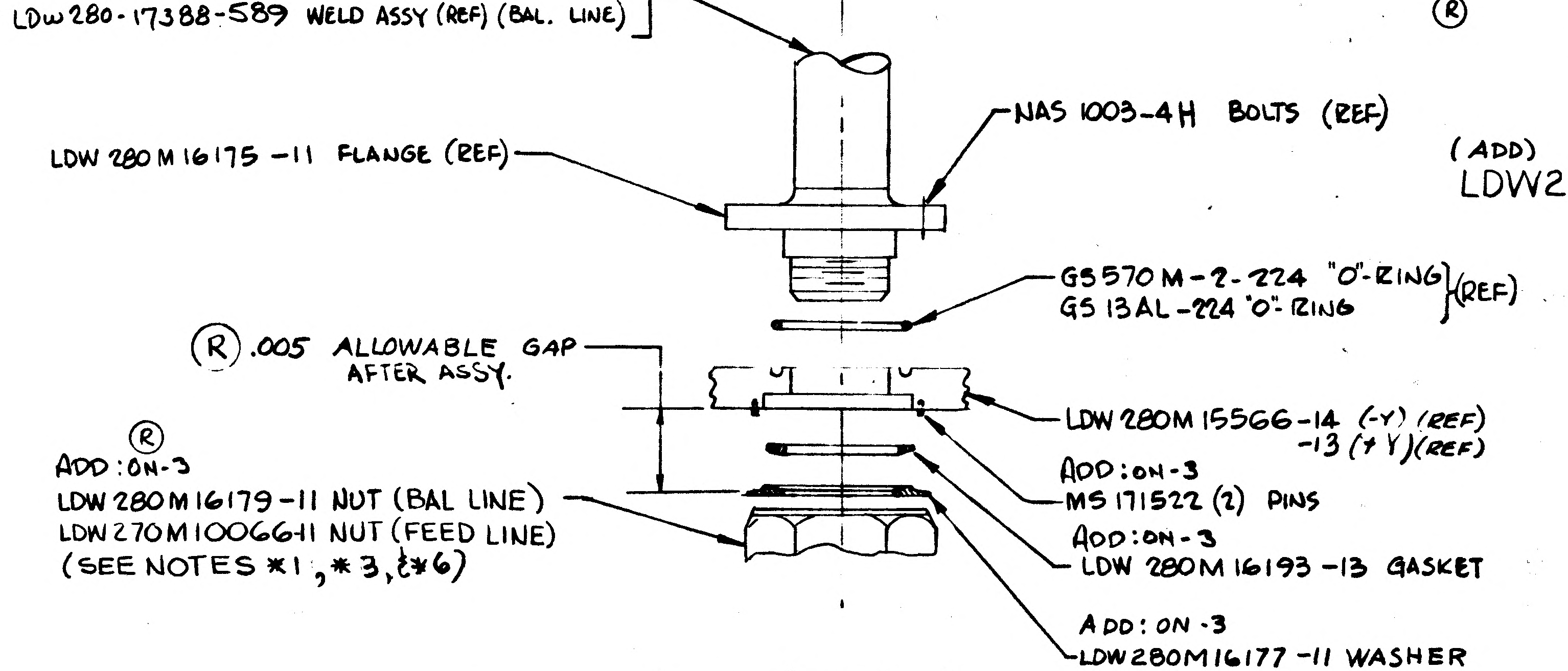
LDW280-17388-588 WELD ASSY (REF) (FEED LINE)
LDW280-17388-589 WELD ASSY (REF) (BAL. LINE)
NAS 1003-4H BOLTS (REF)
LDW 280M16175-11 FLANGE (REF)
GS570M-2-224 "O"-RING (REF)
GS 13AL-224 "O"-RING
Ⓡ .005 ALLOWABLE GAP AFTER ASSY.
LDW 280M 15566-14 (-Y) (REF)
-13 (+Y) (REF)
ADD: ON-3
MS 171522 (2) PINS
ADD: ON-3
LDW 280M 16193-13 GASKET
ADD: ON-3
LDW280M16177-11 WASHER
ADD: ON-3
LDW 280M16179-11 NUT (BAL LINE)
LDW 270M10066-11 NUT (FEED LINE)
(SEE NOTES *1, *3, & *6)

ADD: VIEW △-△
(TYP-4 PLACES ON-3)
TYPICAL SECT. THROUGH FEED & BALANCE LINES.
FUEL +Y, -Y TANK BAYS

02/03
NAS 9-1100

LMLK
LFM

03/03 NAS 9-1100

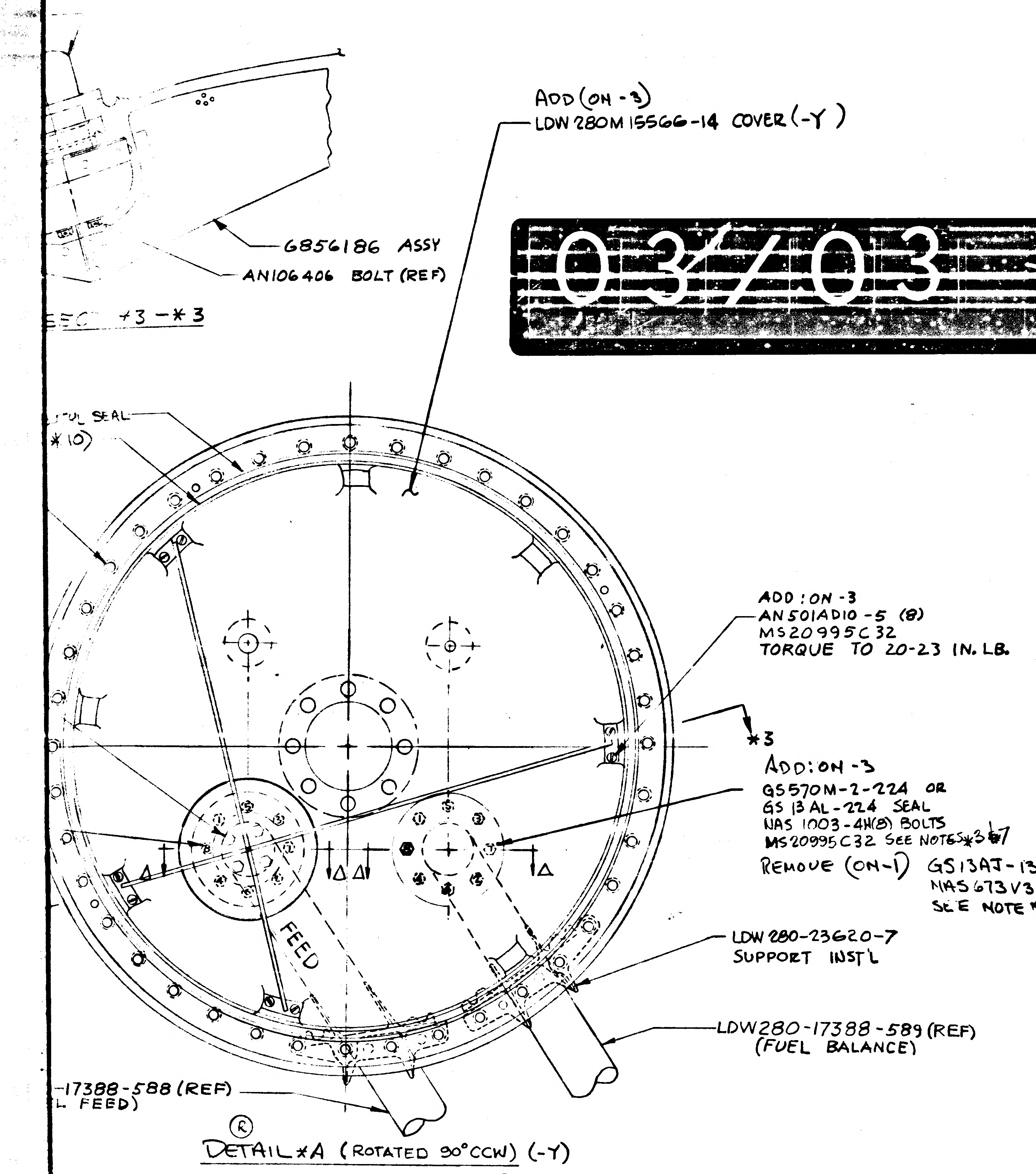
ADD (ON -3)
LDW 280M15566-14 COVER (-Y)
6856186 ASSY
AN106406 BOLT (REF)
SEC *3 - *3
SEAL (*10)
ADD: ON -3
AN501AD10-5 (8)
MS20995C32
TORQUE TO 20-23 IN. LB.
*3
ADD: ON-3
GS570M-2-224 OR
GS13AL-224 SEAL
NAS 1003-4H(8) BOLTS
MS20995C32 SEE NOTES *3 *7
REMOVE (ON-1) GS13AJ-133(1)
NAS673V3H (8)
SEE NOTE *4
FEED
LDW 280-23620-7
SUPPORT INSTL
LDW280-17388-589 (REF)
(FUEL BALANCE)
-17388-588 (REF)
L FEED)
Ⓡ

DETAIL *A (ROTATED 90°CCW) (-Y)

Ⓡ

DESCRIPTION OF EO (CONT)

ON-1 INSTL ADDED GS13AK-142-090(2)
ON-3 INSTL ADDED LDW270 M10066-11 (2), 6856183 (2), AN106406 (8), AN960C10L (8), LDW280M16193-13 (2)
ON-5 INSTL ADDED LDW270 M10065-11 (2), 6856183 (2), AN106406 (8), AN960C10L (8), LDW280M16193-13 (2)

DETAIL *A WAS DETAIL A OF EO D2 VIEW LKG UP TYP ±Y,
DETAIL *B WAS DETAIL B OF EO D2 VIEW LKG UP TYP ±Z

REMOVED NOTE *12 ADDED NOTE *13

ADDED DETAIL *C, *D, SECT *1-*1, *2-*2, *3-*3, *4-*4
ADDED .005 ALLOWABLE GAP TO VIEW △-△ & VIEW □-□

Ⓡ INDICATES REVISIONS TO EO D2

* USE NEXT AVAILABLE LETTER

NOTES:

*1. TIGHTEN NUT TO A TORQUE VALUE OF 225-250 FOOT LB (REF LDW 280M16178 & LDW 280M16179)

*2 TORQUE COUPLING NUTS PER LSP 14-17402.

*3. LOCKWIRE PER MS33540

*6 ON LDW270M10066-11 & LDW280M16179-11
LDW270M10065-11, & LDW280M16178-11,
LUBRICATE ALL THREADS, BODY & FAYING SURFACES BEFORE INSTALLING WITH DU PONT PR-240 AC. Ⓡ

*7. TORQUE NAS 1003-4H BOLTS TO 45-48 INCH LB
INSTALL BOLTS FINGER TIGHT & TORQUE IN SEQUENCE AS FOLLOWS:
a.) PHYSICAL LOCATION FOR START OF SEQUENCE (BOLT NO. 1) IS OPTIONAL
b.) TORQUE ALL BOLTS PER SEQUENCE TO 15 INCH LB AND REPEAT SEQUENCE UNTIL BOLTS DO NOT TURN WHEN 15 INCH POUNDS IS APPLIED.
c.) REPEAT STEP (b.) APPLYING 30 INCH POUNDS
d.) REPEAT STEP (b.) APPLYING 45-48 INCH LB FOR FINAL TORQUE

*8. TORQUE TO 70-75 INCH POUNDS. INSTALL BOLTS AS PER PARAGRAPHS (a), (b) AND (c) OF NOTE *7 ABOVE, THEN REPEAT STEP (b) APPLYING 70-75 INCH POUNDS FOR FINAL TORQUE.

*9. STARTING AT ANY POINT, NUMBER THE BOLT POSITIONS CONSECUTIVELY FROM 1 THRU 40. TIGHTEN ALL BOLTS FINGER TIGHT. TIGHTEN 16 BOLTS 1/8 TURN PER BOLT IN THE SEQUENCE 1, 21, 11, 31, 6, 26, 16, 36, 9, 29, 19, 39, 4, 24, 14, 34, FROM FINGER-TIGHT POSITION. REPEAT SEQUENCE UNTIL 70 INCH POUND TORQUE IS ATTAINED & IS RETAINED ON ALL 16 BOLTS. TIGHTEN ALL REMAINING BOLTS FINGER TIGHT. TORQUE ALL BOLTS TO 200 INCH-LB IN THE SEQUENCE: 1, 21, 11, 31, 6, 26, 16, 36, 9, 29, 19, 39, 4, 24, 14, 34, 7, 27, 17, 37, 2, 22, 12, 32, 8, 28, 18, 38, 3, 23, 13, 33, 10, 30, 20, 40, 5, 25, 15, AND 35. REPEAT IN SAME SEQUENCE UNTIL TORQUE OF 200-210 INCH POUNDS IS MAINTAINED.

*10.- 6844590-12101-BOLT
6849962 SEAL } IS PART OF LSC 280-4-51, -53, -55 & -57

*11.- TORQUE AN501AD10 TO 20-23 IN #s.

Ⓡ *13 - WELD PER MIL-W-8611

ADD TO NOTE 8. (EXCEPT AS NOTED)

ADD -3, -5, -7 -9 ASSEMBLIES AS NOTED
ADD VIEW △-△ & □-□ (USE NEXT AVAILABLE
△-△ & □-□ SECTION LETTERS)
ADD NOTES *1, *2, *3, *6, *7, *8, *9, *10 & *11 & *12
ON-1 REMOVE LDW280-17388-582, -583, -585, -586
-587, -588, -589 & -590
ON-1 REMOVE GS13AJ-133(4) & NAS673V3H (32).
REMOVE DETAIL E, FIGURE I & -13(2)
ADD ON -1 GS13AJ-142(2)

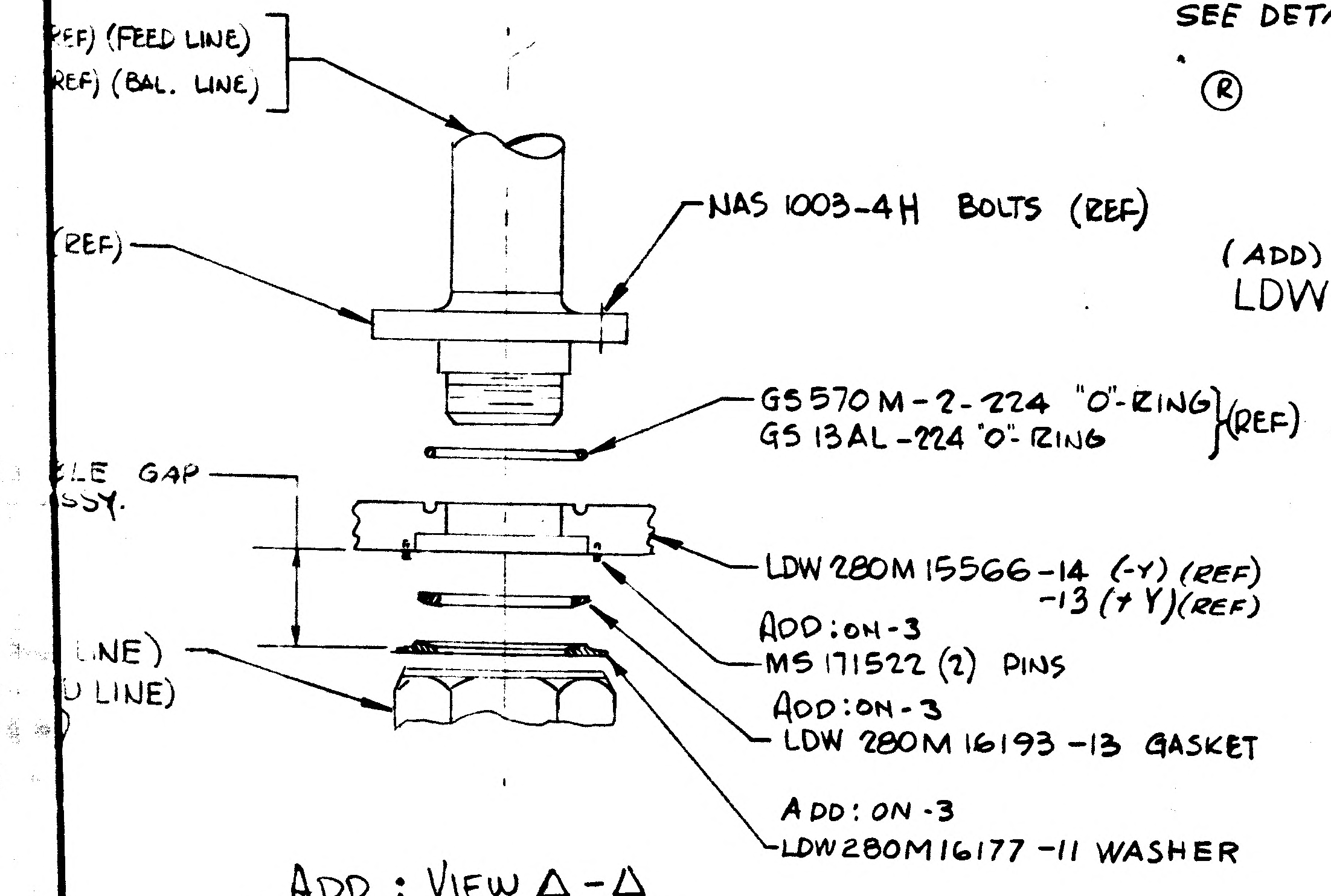
(REF) (FEED LINE)
(REF) (BAL. LINE)
NAS 1003-4H BOLTS (REF)
(REF)
LE GAP
SSY.
GS570M-2-224 "O"-RING
GS13AL-224 "O"-RING (REF)
LDW 280M15566-14 (-Y) (REF)
-13 (+Y) (REF)
ADD: ON-3
MS171522 (2) PINS
ADD: ON-3
LDW 280M16193-13 GASKET
ADD: ON-3
LDW280M16177-11 WASHER
NE)
LINE)

ADD : VIEW △-△
(TYP-4 PLACES ON-3)
TYPICAL SECT. THROUGH FEED & BALANCE LINES
FUEL +Y, -Y TANK BAYS

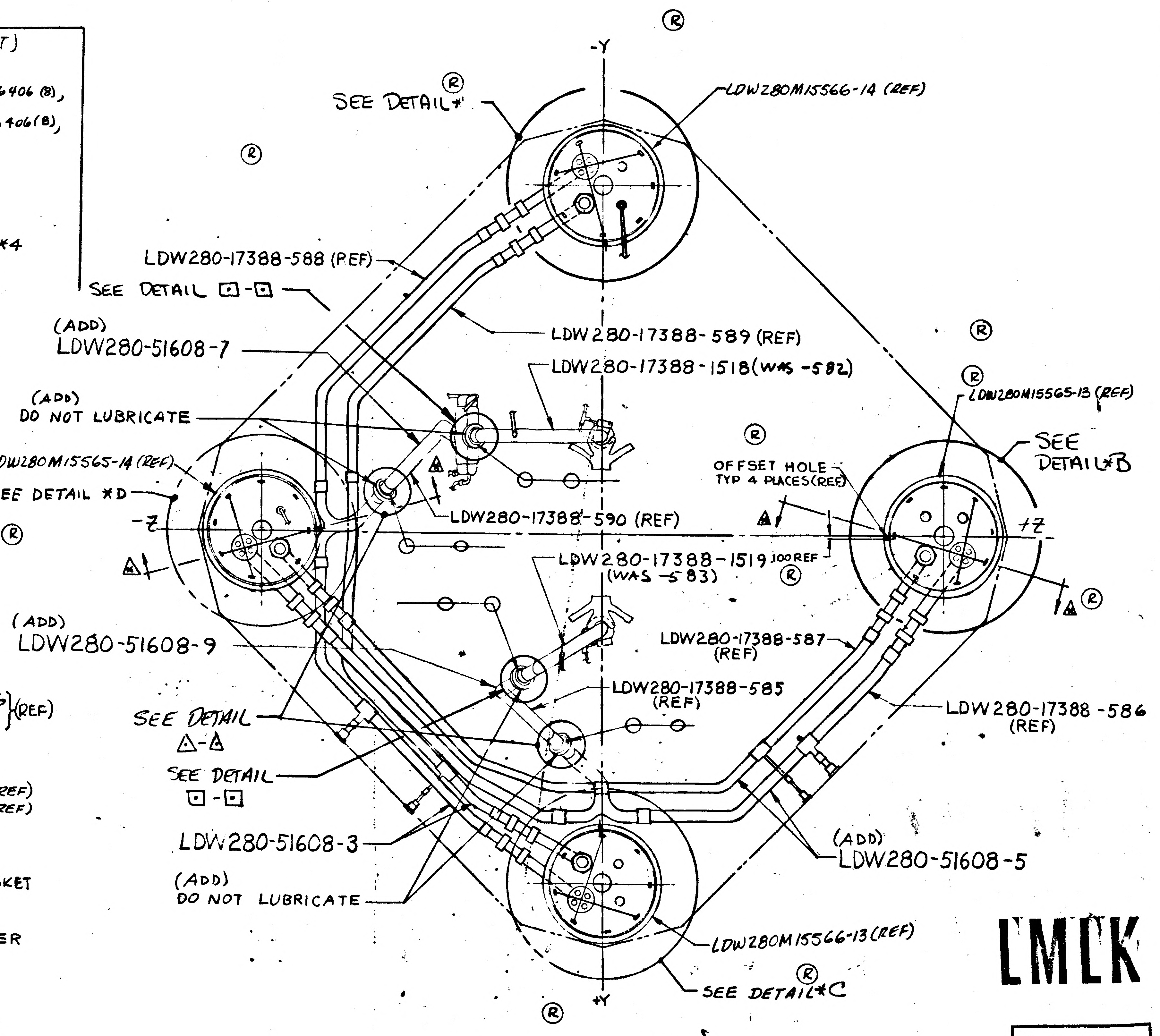
Ⓡ
-Y
SEE DETAIL *
LDW280M15566-14 (REF)
LDW280-17388-588 (REF)
SEE DETAIL □-□
LDW280-17388-589 (REF)
(ADD)
LDW280-51608-7
LDW280-17388-1518 (WAS -582)
(ADD)
DO NOT LUBRICATE
LDW280M15565-14 (REF)
SEE DETAIL *D
-Z
LDW280-17388-590 (REF)
OFFSET HOLE
TYP 4 PLACES (REF)
LDW280M15565-13 (REF)
SEE DETAIL *B
+Z
LDW280-17388-1519 .100 REF
(WAS -583)
(ADD)
LDW280-51608-9
LDW280-17388-587
(REF)
LDW280-17388-585
(REF)
LDW280-17388-586
(REF)
SEE DETAIL
△-△
SEE DETAIL
□-□
LDW280-51608-3
(ADD)
LDW280-51608-5
(ADD)
DO NOT LUBRICATE
LDW280M15566-13 (REF)
SEE DETAIL *C
+Y

LDW 280-51608-1 (REF.)
(VIEW LOOKING DOWN)

LMCK

LFM

FULL SIZE SHEET AREA (9x7x3) = 26.4 SQ FT
1/2 SIZE SHEET AREA [illegible]

	-9	-7	-5	-3	-1	CODE IDENT	PART NO.	S&T	NOMENCLATURE OR DESCRIPTION	MATERIAL	GOVT SPEC	COML SPEC	STOCK SIZE	PROCESS SYM	FINISH NO.	ZONE
J			8	8			AN960C10L	E	WASHER	STD PART						
J			AS REQ	AS REQ			MS20995C32	E	LOCKWIRE	STD PART						
J			8	8			AN106406		BOLT	STD PART						
J			16	16			AN501AD10-5		SCREW	STD PART			ADD ON-3 & -5)			
					132	73342	6844590-12101		BOLT	COMM. PART			ADD ON -1			
J				2		73342	6856186		BAFFLE ASSY	COMM. PART			(ADD ON -3 & -5)			
J			2			73342	6856185		BAFFLE ASSY	COMM. PART			(ADD ON -3 & -5)			
J					4	73342	6849962		RACO SEAL	COMM. PART	(SEE NOTE 10)		(ADD ON -3 & -5			
A			1				LDW280-23622-5		SPT INSTL	SEE DWG			(ADD ON-5)			
A			1				LDW280-23621-5		SPT INSTL				(ADD ON-5)			
A				1			LDW280-23620-7		SPT INSTL				(ADD ON-3)			
A				1			LDW280-23619-5		SPT INSTL				(ADD ON-5)			
J				1			LDW280M15566-14		COVER (FUEL)							
J				1			LDW280M15566-13		COVER (FUEL)							
J			1				LDW280M15565-14		COVER (OXID)							
J			1				LDW280M15565-13		COVER (OXID)							
J	1						LDW280M16191-15		ORIFICE PLATE							
J		1					LDW280M16191-13		ORIFICE PLATE	SEE DWG						
J				4			LDW280M16193-13		GASKET	SEE DWG			(ADD ON -3)			
J			4				LDW280M16193-11		GASKET	SEE DWG			(ADD ON -5)			
				2			LDW270M10066-11		NUT	SEE DWG			(ADD ON -3)			
			2				LDW270M10065-11		NUT	SEE DWG			(ADD ON -5)			
J			-	-	1		LDW270P10007-11		BUTYL SEAL	SEE DWG						
A			32	32			NAS1003-4H		BOLT	STD PART			(ADD ON -3 & -5)			
J				2			LDW280M16179-11		NUT	SEE DWG.			(ADD ON -3)			
J			2				LDW280M16178-11		NUT				(ADD ON -5)			
J			4				LDW280M16177-11		WASHER				(ADD ON-5)			
				4			LDW280M16176-11		WASHER	SEE DWG			(ADD ON -3)			
			8	8			MS171522		PIN	STD. PART			(ADD ON -3 & -5)			
	1	1			2		GS13AK-142-090		"O" RING	GRUMMAN STD			(ADD ON -1, -7 & -9)			
				2			GS570M-2-224		"O"-RING	GRUMMAN STD			(ADD ON -3)			
			2				GS570M-2-226		"O"-RING	GRUMMAN STD			(ADD ON -5)			
			1				LDW280-17388-587		LINE ASSY	(REMOVE FROM -1 INSTL & ADD ON -5)						
			1				LDW280-17388-586			(REMOVE FROM -1 INSTL & ADD ON -5)						
				1			LDW280-17388-589			(REMOVE FROM -1 INSTL & ADD ON -3)						
				1			LDW280-17388-588			(REMOVE FROM -1 INSTL & ADD ON -3)						
		1					LDW280-17388-1518			(REPLACES LDW 280-17388-582)			(ADD ON -7)			
		1					LDW280-17388-590			(REMOVE FROM -1 INSTL & ADD ON -7)						
	1						LDW280-17388-1519			(REPLACES LDW280-17388-583)			(ADD ON -9)			
	1						LDW280-17388-585		LINE ASSY	(REMOVE FROM -1 & ADD ON -9)						
					1		-9		LINES ASSY	(OXID)	(ADD)					
					1		-7		LINES ASSY	(FUEL)	(ADD)					
					1		-5		LINES ASSY	(OXID)	(ADD)					
					1		-3		LINES ASSY	(FUEL)	(ADD)					
J							-1	E	LINES INSTL				(ADD)	SEE NOTE *12		

QTY PER ASSEMBLY

DETAIL SPEC REQD		CLASS II ENGRG CHG		CLASS I ENGRG CHG	✓	LCD 1894	CONTROL INFO NO. LDW280A9445

REASON FOR EO: ELIMINATE PROPELLANT LEAKAGE.

DESCRIPTION OF EO GS13AJ-142 (2)
REF EO D2
ON-1 INSTL REMOVED LDW270P10006-11(4), NAS1271H4 (132), MS20995C20
ON-3 ASSY REMOVED GS13AL-224, MS20995C20, AN960C416(64), LDW270M16179-11 (1), LDW280M15566-11 (2)
ON-5 ASSY REMOVED LDW270M16179-11(1), LDW280M15565-11(2), MS20995C20, AN960C416(68)
ON -7 & -9 ASSY GS13AK-142-090(1) WAS GS13AJ-142(1)

GRUMMAN EO RELEASE
JK 9/30/67

MODEL	~~PROCURING ACT NO.~~ E.I.	EFFECTIVITY GAEC UNIT NO.	SUB CONTR UNIT NO.
LM	LFM-31	LH-1 (31)	

DRAWING REVISION REQD		DISPOSITION OF PARTS		BY / DATE						
✓		-1	-13	9/30/67			J.W. 9/30/67	9/30		9/30/67 9/30/67
REVISE DWG	RECORD EO	REWORK	SCRAP	V.D.I.	SUPPORT	RELIAB GROUP	GROUP LEADER	STRESS GROUP	LIAISON ENGRG	PROJ ENGR

PRIORITY: C

DRAWING TITLE: LINES INSTL ~ PROPULSION & PRESSURIZATION SYSTEM DESCENT STAGE

ENGINEERING ORDER
DRAWING NO. LDW280-51608
EO NO. D4

H. FYRIL
G. HANSMANN
ISSUED BY

SECTION V.D.I. GROUP NO. 280 EXT 25

CODE IDENT NO. 26512

GRUMMAN AIRCRAFT ENGINEERING CORP
BETHPAGE, L. I., N. Y.

ENG 32 3 REV 3-65

*

ENG 32.1 REV 3-65

GRUMMAN AIRCRAFT ENGINEERING CORP.
CODE IDENT NO. 26512
ENGINEERING ORDER

DWG. NO. LDW280-51608
EO NO. D5
CONTROL INFO NO. LM-5- 17035

ON-5
F/D & B/M

REMOVE LDW270M10065-11 (1)
ADD LDW270 M 10065-13 (1)

RELEASED BY LIAISON

DETAIL SPEC REQ		CL II ENGRG CHG		CL I ENGRG CHG	✓ LCD 1894

REASON FOR EO: INCORRECT HOLE LOCATIONS

DESCRIPTION OF EO:
ON-5
F/D & B/M
REMOVED LDW270M10065-11 (1)
ADDED LDW270M 10065-13 (1)

GAEC EO RELEASE: C 5 JK

MODEL	EFFECTIVITY: PROCURING ACTIVITY NO.	GAEC UNIT NO.	SUB CONTR UNIT NO.
LM	LFM #31	LM-1 (31)	

DRAWING CHANGE REQD: REVISE DWG ✓ RECORD EO
DISPOSITION OF PARTS: REWORK ✓ SCRAP

	APPROVED BY	DATE	
	JAP	10/14/67	VDI
SUPPORT			
RELIAB. GROUP			
GROUP LEADER	—	—	
STRESS GROUP	JF	10-2-67	
LIAISON ENGRG	CR	10-2-67	
PROJ ENGRG	WRB	10/14/67	
GOVT		10/3/67	

PRIORITY: C
DRAWING TITLE: LINES INSTALLATION - PROPULSION & PRESSURIZATION SYSTEM - DESCENT STAGE
DRAWING NO. LDW280-51608
EO NO. D5

ISSUED BY LIAISON (H. BABCOCK) PER W. BISHOFF SECTION VDI GROUP NO. 280 PL 25

01

NAS 9-1100

ENG 32.1 REV 3-65

GRUMMAN AIRCRAFT ENGINEERING CORP.
CODE IDENT NO. 26512
ENGINEERING ORDER *

DWG. NO. LDW 280-51608
EO NO. D6
CONTROL INFO NO. LM83-1923

ON-1

ZONE	23 B	GS 13AJ -139 (2)	S/B GS 13 AK - 139 - xxx (SEE NOTE **)
ZONE	22B	GS 13AJ - 139 (2)	S/B GS 13 AK -139- xxx (SEE NOTE **)
"	11 B	GS 13AJ - 139 (2)	S/B GS 13AK - 139 - xxx (SEE NOTE **)
"	11B	GS 13 AJ - 139 (2)	S/B GS 13AK- 139- xxx (SEE NOTE **)
"	14A	GS 13 AJ - 133 (2)	S/B GS 13 AK - 133 - xxx (SEE NOTE **)
"	14C	GS 13 AJ - 133 (2)	S/B GS 13 AK - 133 - xxx (SEE NOTE **)
"	12B	GS 13 AJ - 137 (2)	S/B GS 13AK - 137 - xxx (SEE NOTE **)
"	15B	GS 13 AJ - 137 (2)	S/B GS 13AK - 137 - xxx (SEE NOTE **)

ADD NOTE ** SELECT SECONDARY DASH NUMBER OF SEAL IN ACCORDANCE WITH LPC 280-42.

DETAIL SPEC REQ ☐ CL II ENGRG CHG ☐ CL I ENGRG CHG ☑ LCD 1894

REASON FOR EO: TO REDUCE PROPELLANT LEAKAGE

DESCRIPTION OF EO:
ON-1
GS 13AJ-139 CHANGED TO GS 13AK- 139-xxx } SEE
GS 13AJ-133 " " GS 13 AK-133-xxx } NOTE
GS 13AJ-137 " " GS 13 AK- 137-xxx } **
ADDED NOTE **

83
Ⓔ GAEC EO RELEASE: JC 10/31/67

MODEL	PROCURING ACTIVITY NO.	GAEC UNIT NO.	SUB CONTR UNIT NO.
LM		LM-1 (31)	

DRAWING CHANGE REQD: REVISE DWG ✓ RECORD EO ☐
DISPOSITION OF PARTS: REWORK ✓ SCRAP —

APPROVED BY	BK			RK		DAM PE		
DATE	9-29-67	10/28/67		9/29/67		BPA	9/29/67	16-2
	SYS	~~SUPPORT~~	RELIAB. GROUP	GROUP LEADER	STRESS GROUP	~~SUPPORT ENGRG~~	PROJ ENGRG	~~CONT~~

PRIORITY: C
DRAWING TITLE: LINES INSTALLATION - PROPULSION & PRESS. SYSTEM. DESCENT STAGE
DRAWING NO. LDW 280-51608
EO NO. D6

ISSUED BY P.Klug X3906 SECTION PROJ ENG. KSC GROUP NO. 812 PL 821

01

NAS 9-1100

ENG 32.1 REV 3-65

GRUMMAN AIRCRAFT ENGINEERING CORP.
~~CODE~~ IDENT NO. 26512
ENGINEERING ORDER

LFM LMLK *

DWG. NO. LDW280-51608	EO NO. D7
CONTROL INFO NO. LDW280A 9462	

REF. EO D4

IN DESCRIPTION OF EO
ON -3 ASSY REMOVED LDW270M16179-11 (1) S/B LDW280M16179-11 (2)

ON -5 ASSY REMOVED LDW270M16179-11 (1) S/B LDW 280M16178-11 (2)

ON -3 INSTL ADDED... S/B ON-3 ASSY ADDED...

ON -5 INSTL ADDED... S/B ON-5 ASSY ADDED...

IN B/M
LDW280M16177 (4) REQ ON-5 S/B (4) REQ ON -3
LDW280M16176 (4) REQ ON-3 S/B (4) REQ ON -5

IN FIELD OF EO
DETAIL *C +Y TANK ADD CALLOUT "LDW280M15566-11 COVER"

DETAIL SPEC REQ		CL II ENGRG CHG		CL I ENGRG CHG	✓ LCD1894

REASON FOR EO: TO CLEARIFY INFORMATION ON EO D4

DESCRIPTION OF EO: REF EO D4
SEE ABOVE

GAEC EO RELEASE: JK 10/2/67

MODEL	~~PROCURING ACTIVITY NO.~~ EI	GAEC UNIT NO.	SUB CONTR UNIT NO.
LM	LFM-31	LM-1(31)	

DRAWING CHANGE REQD: REVISE DWG	RECORD EO	DISPOSITION OF PARTS: REWORK	SCRAP
✓		✓	

APPROVED BY					NM			
DATE	10/2/67			10/2/67	10/2/67		10/2/67	10-2-67
	VDI	SUPPORT	RELIAB. GROUP	GROUP LEADER	STRESS GROUP	LIAISON ENGRG	PROJ ENGRG	

PRIORITY	DRAWING TITLE	DRAWING NO.	EO NO.
C	LINES INSTL PROPULSION & PRESSURIZATION SYSTEM D/S	LDW280-51608	D7

ISSUED BY Hugh Ryan X1392 10-2-67 SECTION VDI (EQUIP LINES) GROUP NO. 332 PL 25

01 NAS 9-1100

ENG 32.1 REV 3-65

GRUMMAN AIRCRAFT ENGINEERING CORP.
CODE IDENT NO. 26512
ENGINEERING ORDER

*

DWG. NO. LDW280-51608

EO NO. D8

CONTROL INFO NO. LM83-1834

FOR -1 ASSY

CANCELL EO C8.

DETAIL SPEC REQ		CL II ENGRG CHG		CL I ENGRG CHG	✓ LCP. 10720

REASON FOR EO: INSTALLATION OF NEW HEAT EXCHANGER - LINE ASSY

DESCRIPTION OF EO: CANCELLED E.O. C8

GAEC EO RELEASE: JK 7/31/

MODEL	PROCURING ACTIVITY NO.	GAEC UNIT NO.	SUB CONTR UNIT NO.
LM		LM-1 (3)	

DRAWING CHANGE REQD: REVISE DWG ✓ RECORD EO

DISPOSITION OF PARTS: REWORK ✗ SCRAP

APPROVED BY								
DATE				10 28				10-2
	SYS	VDZ	RELIAB. GROUP	GROUP LEADER	STRESS GROUP	LIAISON ENGRG	PROJ ENGRG	

PRIORITY: C

DRAWING TITLE: LINES INSTALLATION - PROPULSION & PRESS SYSTEM DESCENT STAGE

DRAWING NO. LDW 280-51608

EO NO. D8

ISSUED BY R. ENGLEHART SECTION PROJ ENG GROUP NO. 812 PL 83

01

NAS 9-1100

ENG 32.1 REV 3-65

LFM

GRUMMAN AIRCRAFT ENGINEERING CORP.
CODE IDENT NO. 26512 *
ENGINEERING ORDER

DWG. NO. LDW280-51608
EO NO. D9
CONTROL INFO NO. LDW280A 9529

THIS EO IS A REVISION OF EO D2 & D4

REVISE NOTE *9. STARTING AT .. .. TIGHT. TORQUE ALL BOLTS TO 170-180 INCH-LB (WAS 200 INCH-LB) IN THE SEQUENCE: 1, 21 ....

IN B/M ON -3 ADD GS570M-2-224 (2)
ON -5 ADD GS570M-2-226 (2)

THIS IS A REVISION TO EO D4 ONLY
IN F/D DETAIL *C GS570M-2-224 WAS GS570M-2-226 (2 PLACES)

LMLK

IN GENERAL NOTES
FOR NOTE *6 ADD TO LUBRICATED PARTS
"AN601406 BOLTS ON -3 ASSY"
ADD TO END OF NOTE
"PER LSM 14-6004"

DETAIL SPEC REQ		CL II ENGRG CHG		CL I ENGRG CHG	✓	LCD 1894

5

REASON FOR EO: TORQUE REQ REVISED

REF EO D2 & D4 DESCRIPTION OF EO REVISED *6
REVISED NOTE *9 170-180 INCH LB WAS 200 IN.LB. IN B/M ON-3 ADDED GS570-2-224 (2) ON-5 ADDED GS570-2-226 (2). IN F/D DETAIL *C GS570M-2-224 WAS GS570-2-226 (2 PLACES)

GAEC C EO RELEASE: JK 10/5/67

MODEL	~~PROCURING ACTIVITY NO.~~ EI	GAEC UNIT NO.	SUB CONTR UNIT NO.
LM	LFM-31	LM-1 (31)	

DRAWING CHANGE REQD: REVISE DWG ✓ | RECORD EO
DISPOSITION OF PARTS: REWORK ✓ | SCRAP

APPROVED BY								
DATE	10/4/67			10/4/67	10/4		10/10/67	10/4/67
	VDI	SUPPORT	RELIAB. GROUP	GROUP LEADER	STRESS GROUP	LIAISON ENGRG	PROJ ENGRG	~~SSDT~~

PRIORITY C
DRAWING TITLE LINES INSTL PROPULSION & PRESSURIZATION SYSTEM D/S
DRAWING NO. LDW280-51608
EO NO. D9

ISSUED BY HUGH RYAN X1392 10-4-67 SECTION VDI (EQUIP LINES) GROUP NO. 332 PL 25

01

NAS 9-1100

ENG 32.1 REV 3-65

GRUMMAN AIRCRAFT ENGINEERING CORP.
CODE IDENT NO. 26512

ENGINEERING ORDER

DWG. NO. LDW280-51608
EO NO. D10
CONTROL INFO NO. LDW280A9551

LMLK

LFM

DESCRIPTION OF EO

REF EO D9 FOR NOTE *9 170 IN. LB WAS 170-180 IN.LB.
FOR NOTE *6 AN106406 WAS AN601406

REF EO D7
LDW280M15566-13 WAS LDW280M15566-11

REF EO D4 IN B/M DELETED NAS673V3H (32)
IN SECT *2-*2 & IN SECT *1-*1
AN106406 (REF) WAS AN601406 (REF)
IN DETAIL *C 6844590-12101 (32) WAS (34)
TO CALLOUT GS570M-2-224 SEAL ADDED
"OR GS13AL-224 SEAL"
IN DETAIL *B 6844590-12101 (34) WAS (32)
(OXID BALANCE) WAS (FUEL BALANCE) & (OXID FEED) WAS (FUEL FEED)
IN VIEW △-△ TO CALLOUT LDW280M16179-11 NUT (BAL LINE)
LDW270M10066-11 NUT (FEED LINE)
ADDED "MS20995C32 LOCKWIRE"
IN VIEW □-□ TO CALLOUT LDW280M16178-11 NUT (BAL LINE)
LDW270M10065-11 NUT (FEED LINE)
ADDED "MS20995C32 LOCKWIRE"

IN GENERAL NOTES
DELETE NOTES #11, #20, #21

REF EO D2 & D4 FOR NOTE *9 180 INCH POUNDS WAS 200-210 INCH POUNDS

DETAIL SPEC REQ	☐	CL II ENGRG CHG	☐	CL I ENGRG CHG	✓	LCD1894

5

REASON FOR EO	DESCRIPTION OF EO	GAEC EO RELEASE
TO CLEARIFY INFORMATION ON EOD4, EOD7, EOD9, EOD2	SEE ABOVE	JK 10/6/7

MODEL	EFFECTIVITY PROCURING ACTIVITY NO.	GAEC UNIT NO.	SUB CONTR UNIT NO.
LM	LFM-31	LM-1 (31)	

DRAWING CHANGE REQD		DISPOSITION OF PARTS		APPROVED BY							
				DATE	10/5/67			10-5-67	10-5-67	KSC	10/5/67	10-5-67
✓ REVISE DWG	RECORD EO	✓ REWORK	SCRAP	—	VDI	SUPPORT	RELIAB. GROUP	GROUP LEADER	STRESS GROUP	~~LIAISON~~ ENGRG	PROJ ENGRG	~~GOVT~~

PRIORITY	DRAWING TITLE	DRAWING NO.	EO NO.
C	LINES INSTL PROPULSION & PRESSURIZATION SYSTEM D/S	LDW280-51608	D10

ISSUED BY HUGH RYAN X1392 10-5-67 SECTION VDI (EQUIP LINES) GROUP NO. 332 PL 25

01

NAS 9-1100

ENG 32.1 REV 3-65

GRUMMAN AIRCRAFT ENGINEERING CORP.
CODE IDENT NO. 26512
ENGINEERING ORDER

DWG. NO. LDW280-51608
EO NO. D11
CONTROL INFO NO. LDW280A9552

CANCEL EO D1 & D6

LMLK

LFM

DETAIL SPEC REQ ☐ CL II ENGRG CHG ☐ CL I ENGRG CHG ✓ LCD 1894

REASON FOR EO: EO NO LONGER REQD DUE TO RE WORK OF SYSTEM

DESCRIPTION OF EO: CANCELED EO D1 & D6

GAEC EO RELEASE: JK 10/6/67

MODEL	PROCURING ACTIVITY NO.	GAEC UNIT NO.	SUB CONTR UNIT NO.
LM	LFM-31	LM-1(31)	

DRAWING CHANGE REQD: REVISE DWG ✓ RECORD EO

DISPOSITION OF PARTS: REWORK ✓ SCRAP

APPROVED BY								
DATE	10/5/67			10-5-67	10/5/67		10/5/67	10-5-67
	VD1	SUPPORT	RELIAB. GROUP	GROUP LEADER	STRESS GROUP	LIAISON ENGRG	PROJ ENGRG	

PRIORITY: C

DRAWING TITLE: LINES INSTL PROPULSION & PRESSURIZATION SYSTEM D/S

DRAWING NO.: LDW280-51608

EO NO.: D11

ISSUED BY HUGH RYAN X1392 10-5-67 SECTION VD1(EQUIP LINES) GROUP NO. 332 PL 25

01

NAS 9-1100

ENG 32.1 REV 3-65

GRUMMAN AIRCRAFT ENGINEERING CORP.
CODE IDENT NO. 26512
ENGINEERING ORDER *

DWG. NO. LDW 280 -51608
EO NO. E1
CONTROL INFO NO. LM83-1921

REFERENCE NOTE # 20, FOR OXIDIZER FEED SHOWN IN F/D ZONE 11B. FINAL TORQUE APPLIED WAS 110 - 120 IN. LBS. AS PER BPA. TWX # 25-41, 9 AUG 1967.

THIS CONNECTOR WAS SUBSEQUENTLY DISASSEMBLED PER TPS S/C 217.

THIS IS A RECORD EO

DETAIL SPEC REQ	☐	CL II ENGRG CHG	☐	CL I ENGRG CHG ✓ LCD 1894

GAEC EO RELEASE: 83 JK 10/31/67

REASON FOR EO: SHOW HARDWARE CONFIGURATION

DESCRIPTION OF EO: ADDED E.O. TO RECORD BLOCK

MODEL	EFFECTIVITY: PROCURING ACTIVITY NO.	GAEC UNIT NO.	SUB CONTR UNIT NO.
LM		LM-1 (31)	

DRAWING CHANGE REQD: REVISE DWG ☐ RECORD EO ✓

DISPOSITION OF PARTS: REWORK ✓ SCRAP ☐

APPROVED BY	PEK	JaP		PEK		JWC PE BPA		
DATE	9/29/67	10/28/67		9/29/67			1/29/67	FO-2
		~~SUPPORT~~ VPZ	RELIAB. GROUP	GROUP LEADER	STRESS GROUP	~~CONTRACT ENGRG~~	PROJ ENGRG	~~CONF~~

PRIORITY: C

DRAWING TITLE: LINES INSTALL. PROPULSION AND PRESSURIZATION SYSTEM DESCENT STAGE

DRAWING NO. LDW280-51608

EO NO. E1

ISSUED BY P. KING X3906 SECTION PROJ. ENG. GROUP NO. 812 PL 82

01

NAS 9-1100

ENG 32.1 REV 3-65

GRUMMAN AIRCRAFT ENGINEERING CORP.
CODE IDENT NO. 26512
ENGINEERING ORDER

DWG. NO. LDW 280 51608 | EO NO. E2
CONTROL INFO NO. LM83-1922

REFERENCE NOTE #4, FOR OXIDIZER TANK #1 SHOWN IN F/D ZONE 15B. FINAL TORQUE APPLIED WAS 49-52 IN. LBS. AS PER BPA TWX # 25-41, DATED 9 AUG. 1967.

THIS CONNECTOR WAS SUBSEQUENTLY DISASSEMBLED PER TPS S/C 217.

THIS IS A RECORD EO

DETAIL SPEC REQ	CL II ENGRG CHG	CL I ENGRG CHG ✓ LCD 1894

REASON FOR EO: SHOW HARDWARE CONFIGURATION.

DESCRIPTION OF EO: ADDED E.O. TO RECORD Block

GAEC EO RELEASE: JK 10/31/67

MODEL	PROCURING ACTIVITY NO.	GAEC UNIT NO.	SUB CONTR UNIT NO.
LM		LM-1 (-31)	

DRAWING CHANGE REQD: REVISE DWG ☐ RECORD EO ✓

DISPOSITION OF PARTS: REWORK ✓ SCRAP ☐

	SYS	SUPPORT	RELIAB. GROUP	GROUP LEADER	STRESS GROUP	LIAISON ENGRG	PROJ ENGRG
APPROVED BY	PEK	JAP		PEK		JWE PE	
DATE	9/29/67	10/20/67		9/29/67		BPA 9/25/67	10-2

PRIORITY: C

DRAWING TITLE: LINES INSTALL. PROPULSION AND PRESSURIZATION SYSTEM DESCENT STAGE.

DRAWING NO.: LDW 280-51608

EO NO.: E2

ISSUED BY P. KLUG x3906 SECTION PROJ. ENG. GROUP NO. 812 PL 83.

01

NAS 9-1100

LDW280-51609 A

MODEL OR END ITEM	NEXT ASSY	MODULE OR SER NO.	REQD PER MODULE OR END ITEM
PART NO.		GAEC SCH NO.	

MODEL OR END ITEM	NEXT ASSY	MODULE OR SER NO.	REQD PER MODULE OR END ITEM
PART NO.		GAEC SCH NO.	

MODEL OR END ITEM	NEXT ASSY	MODULE OR SER NO.	REQD PER MODULE OR END ITEM
LEM	LDW280-51508	LEM-1(31)	1
PART NO. LDW280-51609-1		GAEC SCH NO. 50-1	

5

SH REV STATUS: FOR DESCRIPTION OF REV SEE SUBQ SH

SHEET	1	2	3	4	1.10				
REV	A	A	A	A	A				
SHEET									
REV									
SHEET									
REV									

LAST SECT LTR USED	D	GRUMMAN REL INFO A	
		PRIM NO.	JK(000)
LAST DASH NO. USED	-1	320	MP-1A-1/9/7

UNLESS OTHERWISE SPECIFIED DIMENSIONS ARE IN INCHES.
TOLERANCE UNLESS SPECIFIED
FRACTIONS - DECIMALS - ANGLES
~ ~ ~

ORIG DWG AUTH
DETAIL SPEC REQUIREMENT
CLASS II ENGRG CHANGE
CLASS I ENGRG CHANGE

CONTRACT NO. NAS 9-1100
LINE ITEM #5
DOCUMENTATION TYPE II

DRAWN BY	A.V.Purins 8.25.66
LAYOUT BY	J. BOHUN
CHECKED BY	
GR. LEADER	J. Way 8/30/66
VDI	[illegible] 1/E/3c
STRUCTURES	[illegible] 8/31/66
STRUCTURES	[illegible] 9/1
WEIGHTS	[illegible] 9-1
PROJ ENGR	R.M. Carbee (E) 9-3
REL GROUP	Bott. 9-15-66

® GRUMMAN AIRCRAFT ENGRG CORP
BETHPAGE, L. I., NEW YORK

LINES INSTALLATION
ENVIRONMENTAL & CONTROL SUBSYSTEM
DESCENT STAGE

SIZE	CODE IDENT NO.		
B	26512	LDW280-51609	A
SCALE NONE		SHEET 1 OF 5	

ENG 77.1 12-65

01 NAS 9-1100

REVISIONS FOR CONTINUATION OF REVISIONS SEE SHEET ____

CHANGE LTR	ITEM NO.	SHEET NO.	ZONE	GRUMMAN INFO ONLY	DET SPEC	CLASS I	CLASS II	ENGRG ORDER	DESCRIPTION	EFFECTIVITY	DISPOSITION OF EXISTING PARTS		CHANGED BY AND DATE	ENGRG APPD	GOVT APPD
											REWORK	SCRAP			
		1.00							ADDED SH 1.10; LAST SECT. LTR USED D-D WAS C-C; SH 1 OF 5 WAS SH 1 OF 4						
A	1	4 2	6A	2			✓	EOA1 LCD 537 CCA 398	ON I-INSTL REMOVED-0300HP5, GC500J-D5T (7), GB511J-08 (7), AN960D8L (14), ADDED CALLOUT MS21042L08 (6), GC500J-D5T (6), GB511J-08 (6), AN960 D8L (12)	LMI (31)	✓	K. NELSON 12-28-67			
	2	4 2	7A	1				EOA2	ON I-INSTL IN F/D AND B/M ADDED LSC269-119-6 (2), LSC269-124-6 (2), LSC269-119-5 (1), LSC269-124-5 (1), LSC269-118-5 (1)						
	3	4 3	7B	3				EOA3	ON I-INSTL ADDED VIEW D-D ADDED NOTE 7						
	4						✓	EOA4	CANCELLED BY EOA8						
	5							EOA5	CANCELLED BY EOA8						
	6	4 2	7B 2B					EOA6 LCD 1078	ON I-INSTL ADDED LDW280-17389-079 ECW-4 AND LDW280-17389-080 ECW-4. DELETED LDW280-17389-024 ECW-4.						
	7	4 2 3	7B					EO A7 LCD 1078	ON I-INSTL IN F/D AND B/M DELETED LDW280-17389-080 ECW-4, LDW280-16009-11, GS830G-75C112 AND NOTE 7.						
	8							EOA8/LCD1078	THIS EO CANCELS EOA4 AND EOA5						

CHG APPROVED

LTR	GROUP LDR	VDI			STRUCT.	STRUCT				
A										

GRUMMAN AIRCRAFT ENGRG CORP., BETHPAGE, L. I., NEW YORK

SIZE	CODE IDENT NO.		
B	26512	LDW280-51609	A

SCALE NONE

SHEET 1.10

ENG 77.16 3-66

01

NAS 9-1100

A						6		MS21042L08		NUT	STD PART						
N						1		LSC269-119-5		NUT	SEE NOTE 1						
A						35		AN960D8L	E	WASHER	STD PART						
↑						14		GC500J-D6T	E	CLAMP	↑						
						6		GC500J-D5T	E	CLAMP							
↓						16		GC500J-D4T	E	CLAMP	↓						
A						35		GB511J-08	E	BOLT	STD PART						
N						2		LSC269-119-6	E	NUT	SEE NOTE 1						
↑						1		LSC269-124-5	F	UNION	SEE NOTE 1						
						2		LSC269-124-6	E	UNION	SEE NOTE 1						
						3		LSC269-118-5	E	SEAL	SEE NOTE 1						
						7		LSC269-118-4	E	SEAL	SEE NOTE 1						
						1		LSC269-131-4	E	TEE	SEE NOTE 1						
								LDW280-17389									
						1		↑ -079ECW-4	E	TUBE	SEE DWG						
						1		-023ECW-4	↑	↑	↑						
						1		-022ECW-4									
						1		-021ECW-4									
						1		-025ECW-4									
						1		-020N-6									
						1		-0340LP-5									
						1		-0280LP-5									
						1		-037ECC-6									
						1		-035ECC-6									
↓						1		-032ECC-6	↓	↓	↓						
N						1		↓ -036ECC-6	E	TUBE	SEE DWG						
								LDW280-17389									
								LDW280-51609-1	E	LINES INSTL.							
CL						-1	CODE IDENT	PART NO.	I&T	NOMENCLATURE OR DESCRIPTION	MATERIAL	GOVT SPEC	COML SPEC	STOCK SIZE	PROCESS SYM	FINISH NO.	ZONE
QTY PER ASSEMBLY																	

C.L CLEANLINESS LEVEL

SYM OR NO.	PROCESS OR FINISH	GRUMMAN SPEC OR MILITARY SPEC	SYM OR NO.	PROCESS OR FINISH	GRUMMAN SPEC OR MILITARY SPEC	SYM OR NO.	PROCESS OR FINISH	GRUMMAN SPEC OR MILITARY SPEC

I & T: IDENTIFICATION AND TRACEABILITY IN ACCORDANCE WITH : NONE

GRUMMAN AIRCRAFT ENGRG CORP, BETHPAGE, L. I., NEW YORK

SIZE	CODE IDENT NO.		
B	26512	LDW280-51609	A Ⓐ

SCALE NONE

SHEET 2

ENG 77.2 7-60

01

NAS 9-1100

NOTES:

1. COMMERCIAL PARTS, SEE SPECIFICATION CONTROL DRAWING BEFORE ORDERING.
2. SUBSTITUTION OF NAS1132V AND NAS1133V SCREWS FOR THE GB511J-08 AND GB511J-3 BOLTS IS PERMISSABLE.
3. TUBE NUMBERS ARE DASH NUMBERS OF DWG LDW280-17389
4. ALL FITTINGS & COMPONENTS SHALL BE CLEANED TO LEVEL "N" OF LSP-14-0011 PRIOR TO INSTL. UPON INSTL LEVEL "E" SHALL BE MAINTAINED.
4. ADD DUPONT PR240AC LUBRICANT ON ALL THREAD FITTINGS.
5. GAMAH CONNECTIONS PER LSP14-17402
6. TUBING SHALL BE CLAMPED AS SHOWN ON F/D, HARDWARE CALLOUTS WILL BE ADDED AT LATER DATE.
~~7. SLEEVE TO BE INSTALLED AFTER TORQUING OF NUT & PRESSURE TESTING OF SYSTEM, LOCATE SLEEVE AS SHOWN & SHRINK IN PLACE PER LSP-14-13319.~~

GRUMMAN AIRCRAFT ENGRG CORP., BETHPAGE, L. I., NEW YORK

SIZE	CODE IDENT NO.		
B	26512	LDW280-51609	A Ⓐ
SCALE		SHEET 3	

ENG 73.1 6-64

01

NAS 9-1100

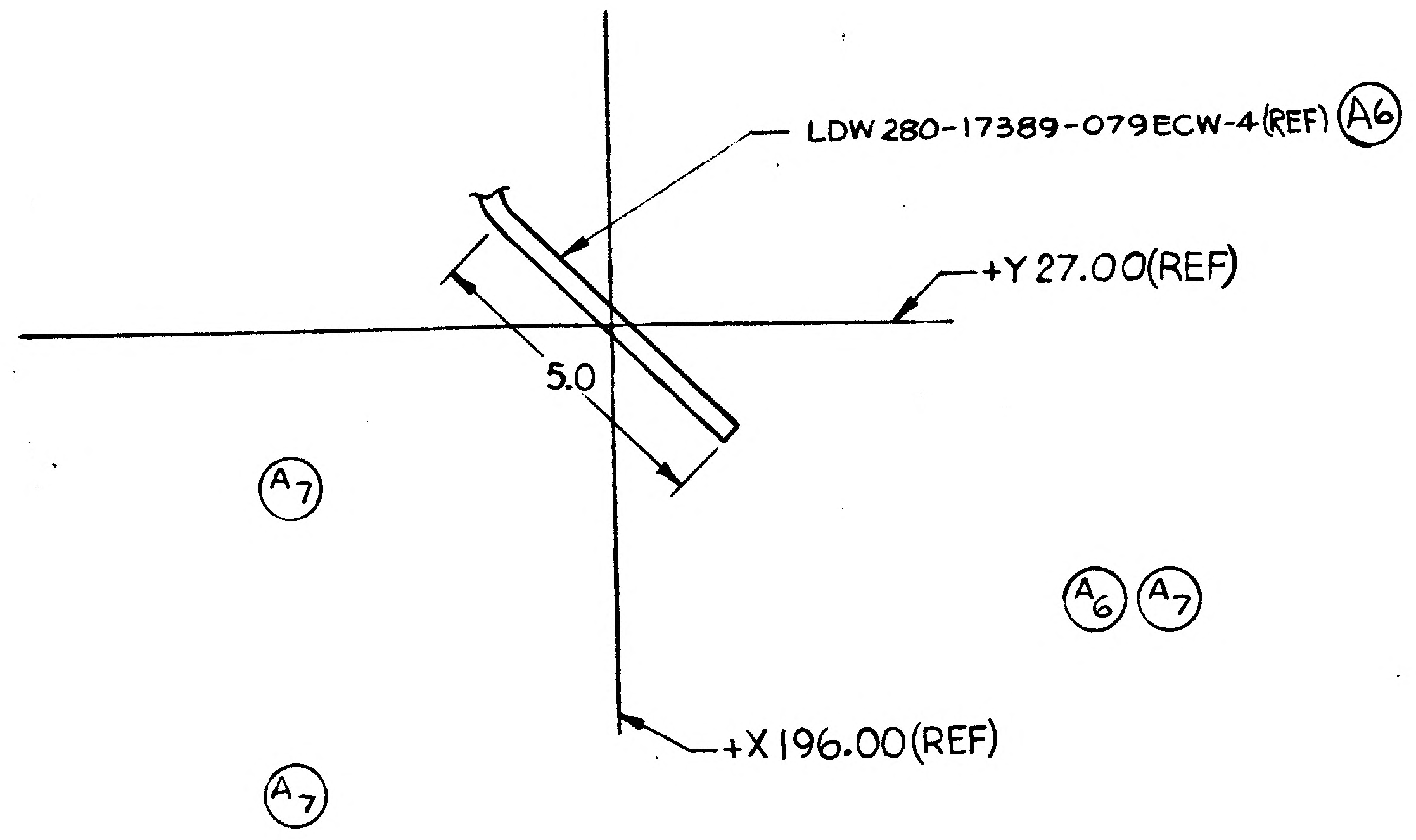
LDW280-17389-079ECW-4(REF) (A6)
+Y27.00(REF)
5.0
+X196.00(REF)
(A7)
(A6) (A7)
(A7)

VIEW D-D (A3)
ZONE 2A

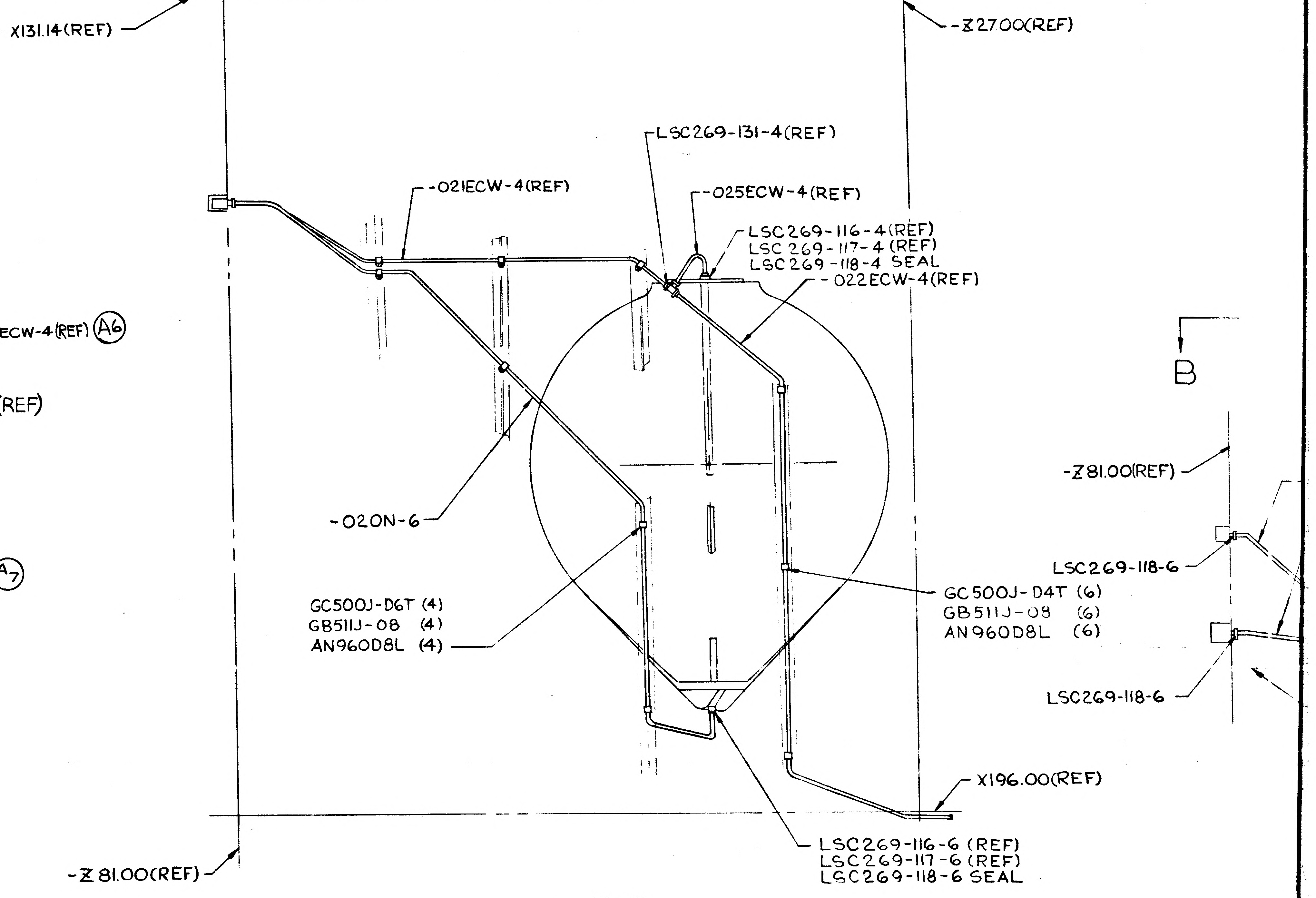
X131.14(REF)
-Z27.00(REF)
LSC269-131-4(REF)
-021ECW-4(REF)
-025ECW-4(REF)
LSC269-116-4(REF)
LSC269-117-4(REF)
LSC269-118-4 SEAL
-022ECW-4(REF)
B
-Z81.00(REF)
-020N-6
LSC269-118-6
GC500J-D6T (4)
GB511J-08 (4)
AN960D8L (4)
GC500J-D4T (6)
GB511J-08 (6)
AN960D8L (6)
LSC269-118-6
X196.00(REF)
LSC269-116-6 (REF)
LSC269-117-6 (REF)
LSC269-118-6 SEAL
-Z81.00(REF)

VIEW B-B

01/02 NAS 9-1100

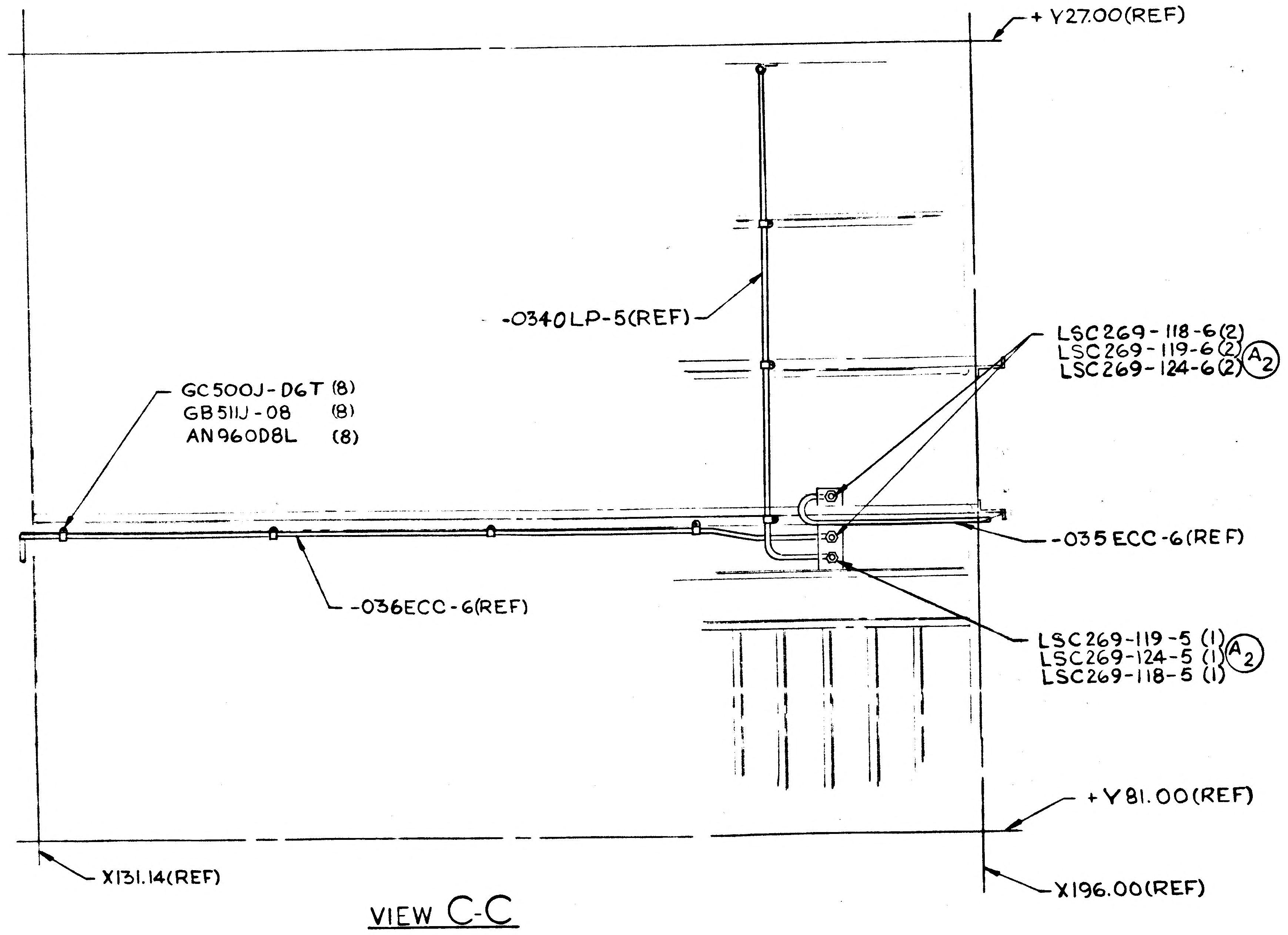
+Y27.00(REF)
-0340LP-5(REF)
LSC269-118-6(2)
LSC269-119-6(2) (A2)
LSC269-124-6(2)
GC500J-D6T (8)
GB511J-08 (8)
AN960D8L (8)
-035ECC-6(REF)
-036ECC-6(REF)
LSC269-119-5 (1)
LSC269-124-5 (1) (A2)
LSC269-118-5 (1)
+Y81.00(REF)
X131.14(REF)
X196.00(REF)

VIEW C-C

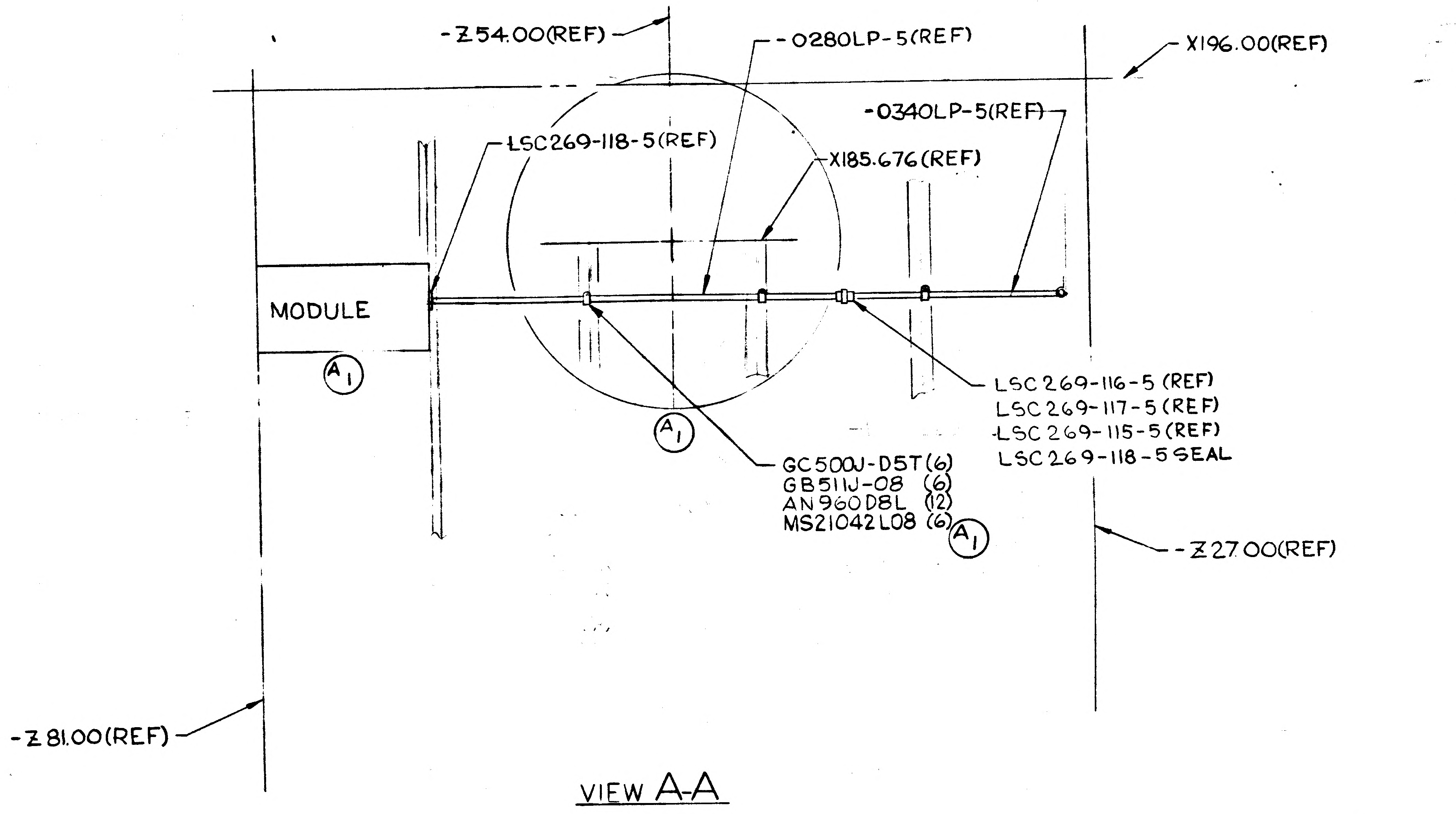
-Z54.00(REF)
-0280LP-5(REF)
X196.00(REF)
-0340LP-5(REF)
LSC269-118-5(REF)
X185.676(REF)
MODULE
(A1)
(A1)
LSC269-116-5 (REF)
LSC269-117-5 (REF)
LSC269-115-5 (REF)
LSC269-118-5 SEAL
GC500J-D5T(6)
GB511J-08 (6)
AN960D8L (12)
MS21042L08 (6) (A1)
-Z27.00(REF)
-Z81.00(REF)

VIEW A-A

A

CODE IDENT NO 26512
LDW280-51609
SHEET 4

2/2

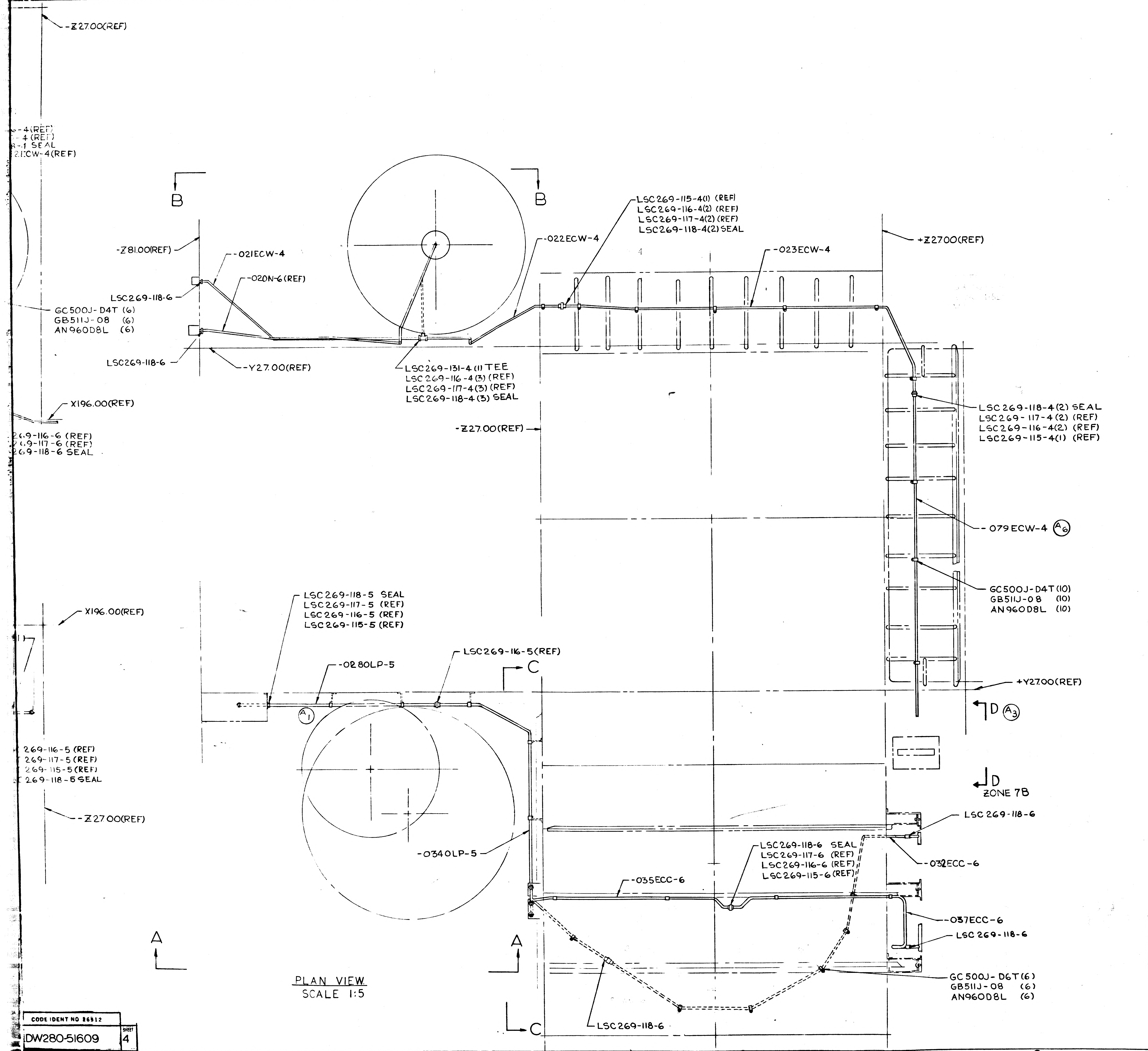
-Z27.00(REF)
-4(REF)
-4(REF)
-1 SEAL
21ECW-4(REF)
B
B
-Z81.00(REF)
-021ECW-4
-020N-6(REF)
LSC269-118-6
GC500J-D4T (6)
GB511J-08 (6)
AN960D8L (6)
LSC269-118-6
-Y27.00(REF)
LSC269-131-4(1) TEE
LSC269-116-4(3) (REF)
LSC269-117-4(3) (REF)
LSC269-118-4(3) SEAL
-022ECW-4
LSC269-115-4(1) (REF)
LSC269-116-4(2) (REF)
LSC269-117-4(2) (REF)
LSC269-118-4(2) SEAL
-023ECW-4
+Z27.00(REF)
X196.00(REF)
269-116-6 (REF)
269-117-6 (REF)
269-118-6 SEAL
-Z27.00(REF)
LSC269-118-4(2) SEAL
LSC269-117-4(2) (REF)
LSC269-116-4(2) (REF)
LSC269-115-4(1) (REF)
-079ECW-4 A6
GC500J-D4T(10)
GB511J-08 (10)
AN960D8L (10)
X196.00(REF)
LSC269-118-5 SEAL
LSC269-117-5 (REF)
LSC269-116-5 (REF)
LSC269-115-5 (REF)
-028OLP-5
LSC269-116-5(REF)
C
A1
+Y27.00(REF)
D A3
269-116-5 (REF)
269-117-5 (REF)
269-115-5 (REF)
269-118-5 SEAL
-Z27.00(REF)
D
ZONE 7B
LSC269-118-6
-034OLP-5
LSC269-118-6 SEAL
LSC269-117-6 (REF)
LSC269-116-6 (REF)
LSC269-115-6 (REF)
-032ECC-6
-035ECC-6
-037ECC-6
LSC269-118-6
A
A
GC500J-D6T(6)
GB511J-08 (6)
AN960D8L (6)
C
LSC269-118-6
5
4
3
2
1

PLAN VIEW
SCALE 1:5

MANUFACTURING OPERATIONS
UNLESS OTHERWISE SPECIFIED
NOTES CHECKED √ APPLY TO THIS DWG.

PART NUMBER
AND ALL OTHER MARKINGS
IN REGION MARKED ☒
USE BOTH SIDES IF NECESSARY.

FILLET AND INSIDE CORNER
RADII TOLERANCES
.016R TO .062R ± .010
.063R TO .250R ± .015
OVER .250R ± .030

DEPTH SHOWN FOR TAPPED HOLES IS FULL THDS. 2-3 IMP THDS. BEYOND PERMISSIBLE.

EXTERNAL THREAD LENGTH SHOWN INCLUDES 2 IMPERFECT THREADS MAX.

DO NOT CADMIUM PLATE & PAINT HOLES OR SURFACES MARKED WITH DOUBLE ASTERISK.

MISMATCH STEP OF ± .005 PERMISSIBLE DUE TO CHANGE OF CUTTERS AT INSIDE INTERSECTING SURFACES.

DIAMETERS MARKED
MUST BE CONCENTRIC WITHIN
FULL INDICATOR
READING

HOLES MUST BE KEPT FREE OF CHROME PLATING SOLUTION.

ALL DIMENSIONS SHOWN TO BE MET AFTER CADMIUM PLATING. THICKNESS OF PLATE .0003 MIN. TO .0005 MAX. MIN. THICKNESS TO BE .0002 ON THREADED AREAS. NO ALLOWANCE FOR PLATING IN HOLES

125√ SURFACE ROUGHNESS INCLUDING REAMED HOLES PER MIL-STD-10

200√ FOR ALL DRILLED HOLES

REMOVE ALL BURRS.
BREAK ALL EDGES .015-.031

INSPECTION INFORMATION
MINIMUM PERMISSIBLE
AVERAGE EDGE DISTANCE
MARKED IS

SYMBOL √ DENOTES SURFACE TO BE MACHINED

UNLESS OTHERWISE SPECIFIED TOLERANCE ON FLANGES IS ± 1/32

LENGTHS OF AN, NAS & MS AL ALY RIVETS SHORTER THAN 1 INCH ARE NOT SPECIFIED.

TOLERANCE ON LOFTED DELINEATIONS IS

DWG SIZE 34 X 87

PRINTING INFO ONLY
FULL SIZE SHEET AREA (36 X 97)= 24.2 SQ. FT.
1/2 SIZE SHEET AREA (1/4 OF FULL)= 6.0 SQ. FT.

PRINT TRIM LINE

C
B
A

LDW280-51609A

LDW280-51609A

02/02

NAS 9-1100

CODE IDENT NO 26512
LDW280-51609
SHEET 4

GRUMMAN AIRCRAFT ENGRG CORP., BETHPAGE, L. I., NEW YORK

LEM	SIZE J	CODE IDENT NO. 26512	LDW280-51609	A
MODEL OR END ITEM	SCALE 1:5		SHEET 4	

LDW280-51609

MODEL OR END ITEM	NEXT ASSY	MODULE OR SER NO.	REQD PER MODULE OR END ITEM

PART NO.	GAEC SCH NO.

MODEL OR END ITEM	NEXT ASSY	MODULE OR SER NO.	REQD PER MODULE OR END ITEM

PART NO.	GAEC SCH NO.

MODEL OR END ITEM	NEXT ASSY	MODULE OR SER NO.	REQD PER MODULE OR END ITEM
LEM	LDW280-51508	LEM-1(31)	1

PART NO.	GAEC SCH NO.
LDW280-51609-1	50-1

5

SH REV STATUS: FOR DESCRIPTION OF REV SEE SUBQ SH

SHEET	1	2	3	4					
REV									
SHEET									
REV									
SHEET									
REV									

LAST SECT LTR USED C

LAST DASH NO. USED -1

GRUMMAN REL INFO

PRIM NO.	LE (001)
320	MP-96-6

UNLESS OTHERWISE SPECIFIED DIMENSIONS ARE IN INCHES.
TOLERANCE UNLESS SPECIFIED
FRACTIONS - DECIMALS - ANGLES
~ ~ ~

ORIG DWG AUTH
DETAIL SPEC REQUIREMENT
CLASS II ENGRG CHANGE
CLASS I ENGRG CHANGE

CONTRACT NO. NAS 9-1100
LINE ITEM #5
DOCUMENTATION TYPE II

DRAWN BY	A.V. PURKINS 8.25.66
LAYOUT BY	J. BOHUN
CHECKED BY	
GR. LEADER	J. Way 8/30/66
VDI	8/31
STRUCTURES	I.K. W.H. 8/31/66
STRUCTURES	Hillerman 9/1
WEIGHTS	9-12
PROJ ENGR	R.M. Carbee (E) 9-3
REL GROUP	Bott. 9-15-66

® GRUMMAN AIRCRAFT ENGRG CORP
BETHPAGE, L. I., NEW YORK

LINES INSTALLATION
ENVIRONMENTAL & CONTROL SUBSYSTEM
DESCENT STAGE

SIZE B
CODE IDENT NO. 26512
LDW280-51609
SCALE NONE
SHEET 1 OF 4

ENG 77.1 12-65

9/1/66

01 NAS 9-1100

C.L.	QTY PER ASSEMBLY					-1	CODE IDENT	PART NO.	I&T	NOMENCLATURE OR DESCRIPTION	MATERIAL	GOVT SPEC	COML SPEC	STOCK SIZE	PROCESS SYM	FINISH NO.	ZONE
A						37		AN960D8L	E	WASHER	STD PART						
						14		GC500J-D6T	E	CLAMP							
						7		GC500J-D5T	E	CLAMP							
						16		GC500J-D4T	E	CLAMP							
A						37		GB511J-08	E	BOLT	STD PART						
N						1		LSC269-118-10	E	SEAL	SEE NOTE 1						
						9		LSC269-118-6	E	SEAL	SEE NOTE 1						
						3		LSC269-118-5	E	SEAL	SEE NOTE 1						
						7		LSC269-118-4	E	SEAL	SEE NOTE 1						
						1		LSC269-131-4	E	TEE	SEE NOTE 1						
								LDW280-17389									
						1		-024ECW-4	E	TUBE	SEE DWG						
						1		-023ECW-4									
						1		-022ECW-4									
						1		-021ECW-4									
						1		-025ECW-4									
						1		-020N-6									
						1		-030HP-5									
						1		-0340LP-5									
						1		-0280LP-5									
						1		-037ECC-6									
						1		-035ECC-6									
						1		-032ECC-6									
N						1		-036ECC-6	E	TUBE	SEE DWG						
								LDW280-17389									
								LDW280-51609-1	E	LINES INSTL.							

C.L. CLEANLINESS LEVEL

SYM OR NO.	PROCESS OR FINISH	GRUMMAN SPEC OR MILITARY SPEC	SYM OR NO.	PROCESS OR FINISH	GRUMMAN SPEC OR MILITARY SPEC	SYM OR NO.	PROCESS OR FINISH	GRUMMAN SPEC OR MILITARY SPEC

I & T: IDENTIFICATION AND TRACEABILITY IN ACCORDANCE WITH : NONE

GRUMMAN AIRCRAFT ENGRG CORP, BETHPAGE, L. I., NEW YORK

SIZE	CODE IDENT NO.	
B	26512	LDW280-51609
SCALE NONE		SHEET 2

ENG 77.2 7-65

01

NAS 9-1100

NOTES:

1. COMMERCIAL PARTS, SEE SPECIFICATION CONTROL DRAWING BEFORE ORDERING.
2. SUBSTITUTION OF NAS1132V AND NAS1133V SCREWS FOR THE GB511J-08 AND GB511J-3 BOLTS IS PERMISSABLE.
3. TUBE NUMBERS ARE DASH NUMBERS OF DWG LDW280-17389
4. ALL FITTINGS & COMPONENTS SHALL BE CLEANED TO LEVEL "N" OF LSP-14-0011 PRIOR TO INSTL. UPON INSTL LEVEL "E" SHALL BE MAINTAINED.
4. ADD DUPONT PR240AC LUBRICANT ON ALL THREAD FITTINGS.
5. GAMAH CONNECTIONS PER LSP14-17402
6. TUBING SHALL BE CLAMPED AS SHOWN ON F/D, HARDWARE CALLOUTS WILL BE ADDED AT LATER DATE.

GRUMMAN AIRCRAFT ENGRG CORP., BETHPAGE, L. I., NEW YORK		
SIZE B	CODE IDENT NO. 26512	LDW280-51609
SCALE		SHEET 3

ENG 73.1 6-64

01

NAS 9-1100

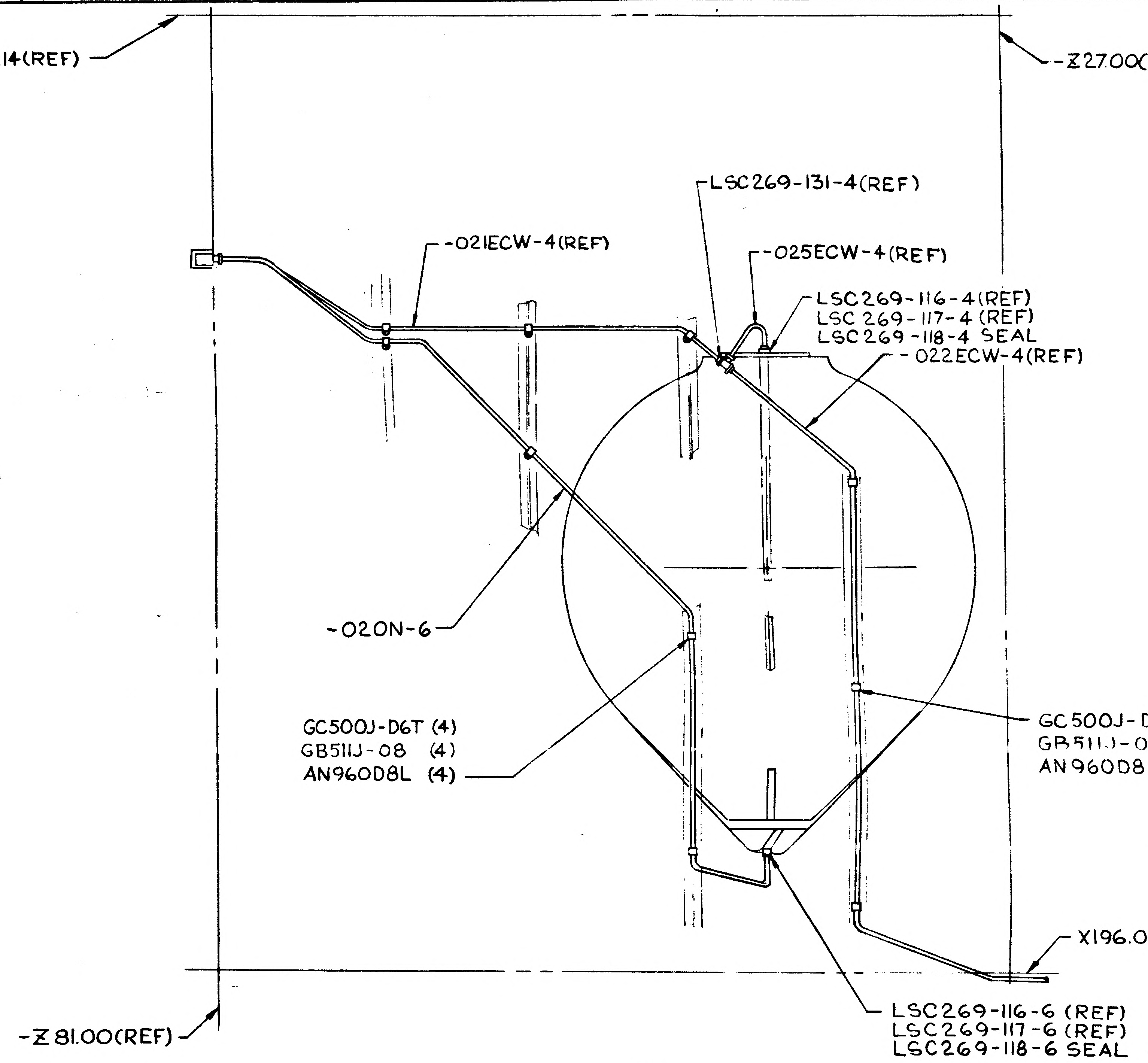
X131.14(REF)
-Z27.00(REF)
LSC269-131-4(REF)
-021ECW-4(REF)
-025ECW-4(REF)
LSC269-116-4(REF)
LSC269-117-4(REF)
LSC269-118-4 SEAL
-022ECW-4(REF)
-020N-6
GC500J-D6T (4)
GB511J-08 (4)
AN960D8L (4)
GC500J-D4T (6)
GB511J-08 (6)
AN960D8L (6)
X196.00(REF)
-Z81.00(REF)
LSC269-116-6 (REF)
LSC269-117-6 (REF)
LSC269-118-6 SEAL

VIEW B-B

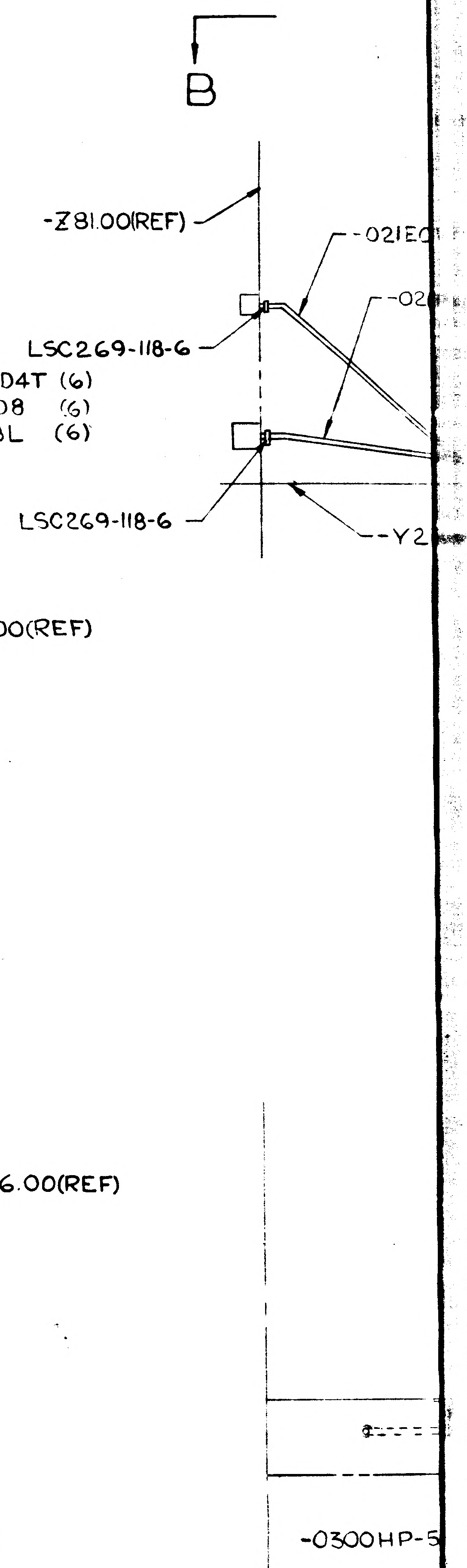
B
-Z81.00(REF)
-021EC
-02
LSC269-118-6
LSC269-118-6
-Y2
-0300HP-5

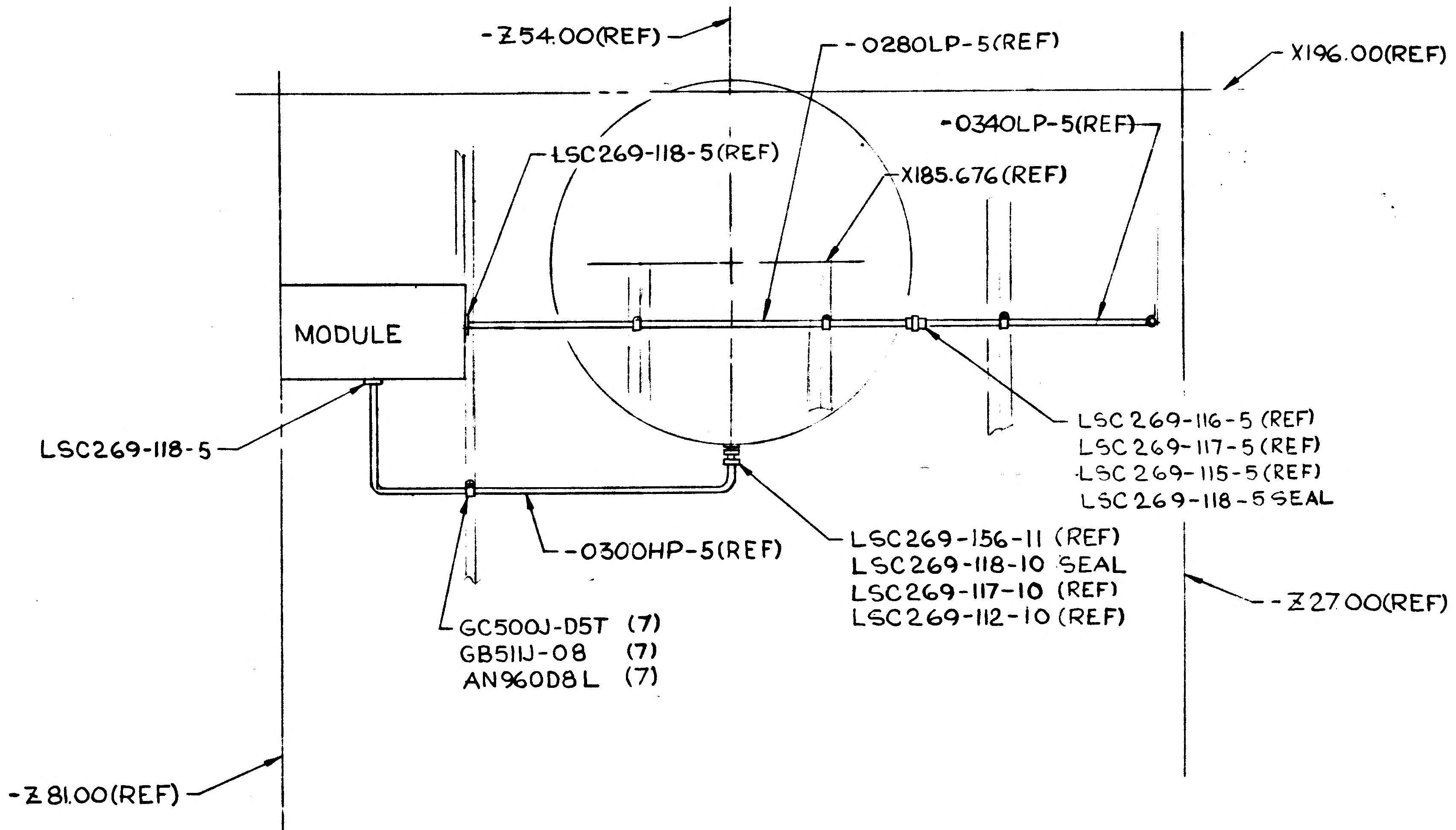
-Z54.00(REF)
-0280LP-5(REF)
X196.00(REF)
-0340LP-5(REF)
LSC269-118-5(REF)
X185.676(REF)
MODULE
LSC269-118-5
LSC269-116-5 (REF)
LSC269-117-5 (REF)
LSC269-115-5 (REF)
LSC269-118-5 SEAL
-0300HP-5(REF)
LSC269-156-11 (REF)
LSC269-118-10 SEAL
LSC269-117-10 (REF)
LSC269-112-10 (REF)
-Z27.00(REF)
GC500J-D5T (7)
GB511J-08 (7)
AN960D8L (7)
-Z81.00(REF)

VIEW A-A

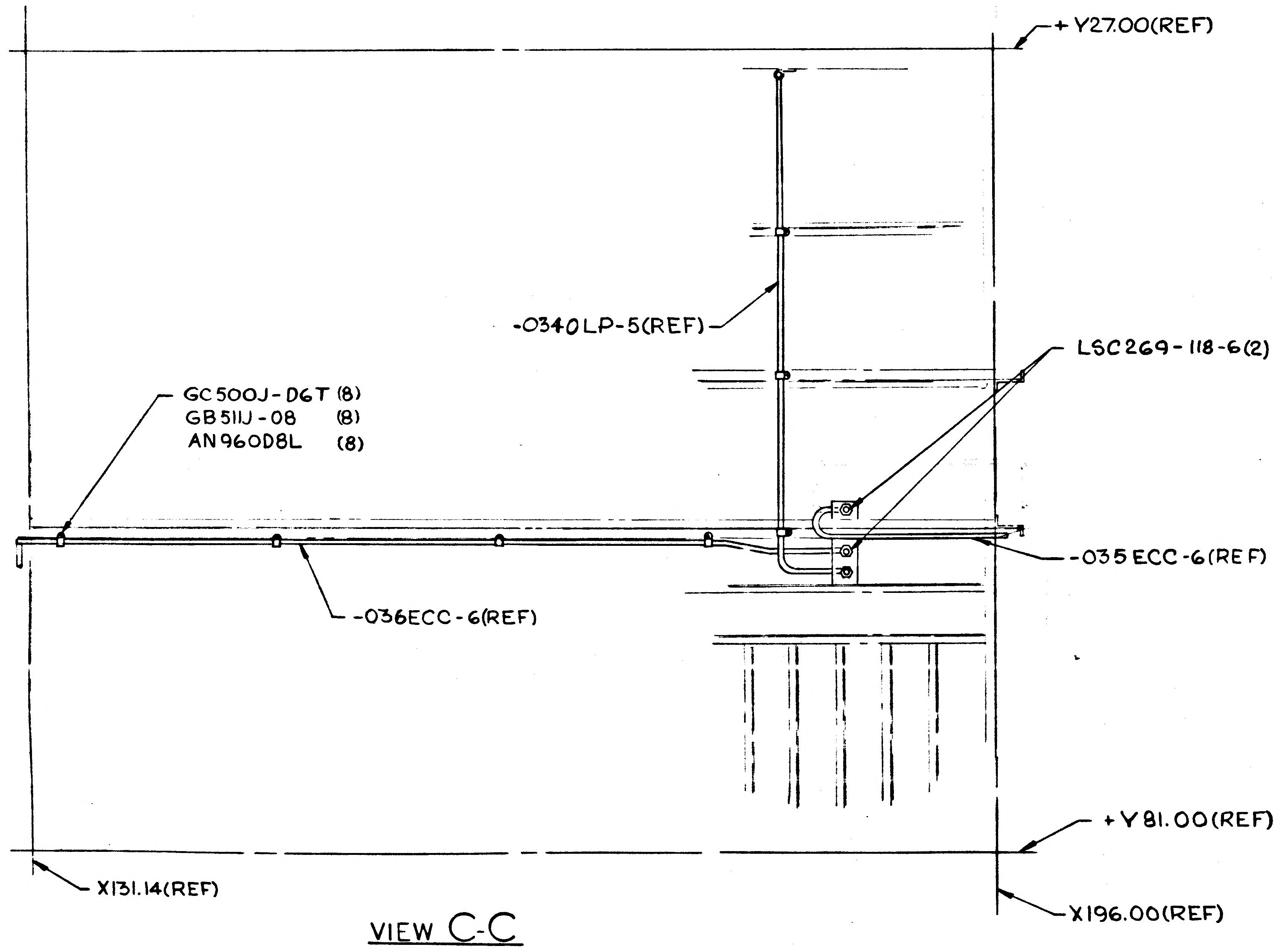
+Y27.00(REF)
-0340LP-5(REF)
LSC269-118-6(2)
GC500J-D6T (8)
GB511J-08 (8)
AN960D8L (8)
-035ECC-6(REF)
-036ECC-6(REF)
+Y81.00(REF)
X131.14(REF)
X196.00(REF)

VIEW C-C

A

01/02

NAS 9-1100

CODE IDENT NO 26512

LDW280-51609

SHEET 4

2/2

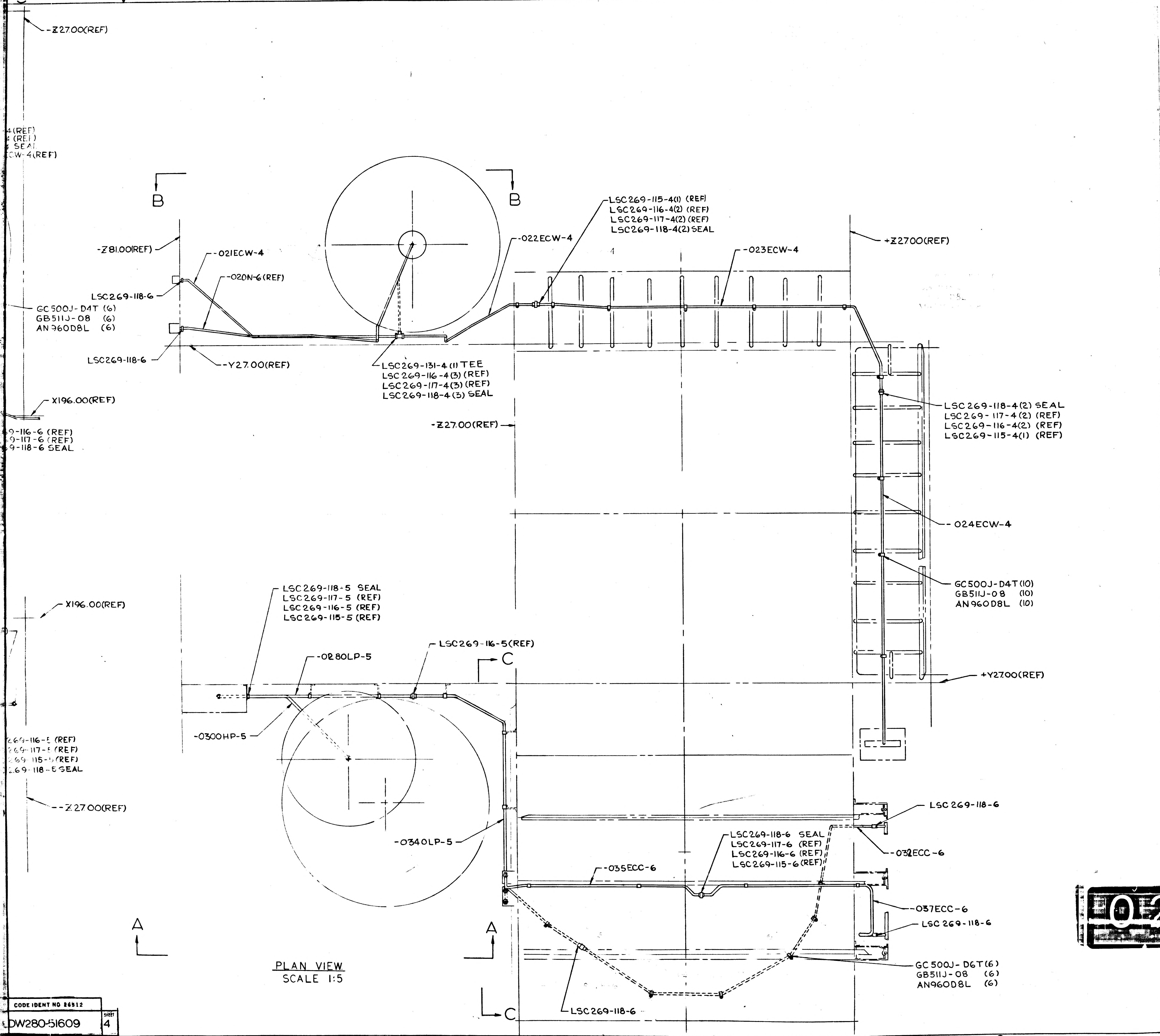

5
4
3
2
1
-Z27.00(REF)
4(REF)
(REF)
SEAL
CW-4(REF)
B
B
-Z81.00(REF)
-021ECW-4
-020N-6(REF)
LSC269-118-6
GC500J-D4T (6)
GB511J-08 (6)
AN960D8L (6)
LSC269-118-6
-Y27.00(REF)
X196.00(REF)
9-116-6 (REF)
9-117-6 (REF)
9-118-6 SEAL
-022ECW-4
LSC269-115-4(1) (REF)
LSC269-116-4(2) (REF)
LSC269-117-4(2) (REF)
LSC269-118-4(2) SEAL
-023ECW-4
+Z27.00(REF)
LSC269-131-4 (1) TEE
LSC269-116-4(3) (REF)
LSC269-117-4(3) (REF)
LSC269-118-4(3) SEAL
-Z27.00(REF)
LSC269-118-4(2) SEAL
LSC269-117-4(2) (REF)
LSC269-116-4(2) (REF)
LSC269-115-4(1) (REF)
-024ECW-4
GC500J-D4T(10)
GB511J-08 (10)
AN960D8L (10)
X196.00(REF)
LSC269-118-5 SEAL
LSC269-117-5 (REF)
LSC269-116-5 (REF)
LSC269-115-5 (REF)
LSC269-116-5(REF)
-028OLP-5
C
+Y27.00(REF)
-030OHP-5
269-116-5 (REF)
269-117-5 (REF)
269-115-5 (REF)
269-118-5 SEAL
-Z27.00(REF)
LSC269-118-6
-032ECC-6
-034OLP-5
LSC269-118-6 SEAL
LSC269-117-6 (REF)
LSC269-116-6 (REF)
LSC269-115-6 (REF)
-035ECC-6
-037ECC-6
LSC269-118-6
A
A
GC500J-D6T(6)
GB511J-08 (6)
AN960D8L (6)
C
LSC269-118-6
4
3
2
1
C
B
A

PLAN VIEW
SCALE 1:5

CODE IDENT NO 26512
LDW280-51609 SHEET 4

MANUFACTURING OPERATIONS
UNLESS OTHERWISE SPECIFIED
NOTES CHECKED √ APPLY TO THIS DWG.

PART NUMBER AND ALL OTHER MARKINGS IN REGION MARKED ⊠ USE BOTH SIDES IF NECESSARY.

FILLET AND INSIDE CORNER RADII TOLERANCES
.016R TO .062R ± .010
.063R TO .250R ± .015
OVER .250R ± .030

DEPTH SHOWN FOR TAPPED HOLES IS FULL THDS. 2-3 IMP THDS. BEYOND PERMISSIBLE.

EXTERNAL THREAD LENGTH SHOWN INCLUDES 2 IMPERFECT THREADS MAX.

DO NOT CADMIUM PLATE & PAINT HOLES OR SURFACES MARKED WITH DOUBLE ASTERISK.

MISMATCH STEP OF ± .005 PERMISSIBLE DUE TO CHANGE OF CUTTERS AT INSIDE INTERSECTING SURFACES.

DIAMETERS MARKED MUST BE CONCENTRIC WITHIN FULL INDICATOR READING

HOLES MUST BE KEPT FREE OF CHROME PLATING SOLUTION.

ALL DIMENSIONS SHOWN TO BE MET AFTER CADMIUM PLATING. THICKNESS OF PLATE .0003 MIN. TO .0005 MAX. MIN. THICKNESS TO BE .0002 ON THREADED AREAS. NO ALLOWANCE FOR PLATING IN HOLES

125 SURFACE ROUGHNESS INCLUDING REAMED HOLES PER MIL-STD-10

200 FOR ALL DRILLED HOLES

REMOVE ALL BURRS. BREAK ALL EDGES .015-.031

INSPECTION INFORMATION MINIMUM PERMISSIBLE AVERAGE EDGE DISTANCE MARKED IS

SYMBOL √ DENOTES SURFACE TO BE MACHINED

UNLESS OTHERWISE SPECIFIED TOLERANCE ON FLANGES IS ± 1/32

LENGTHS OF AN, NAS & MS AL ALY RIVETS SHORTER THAN 1 INCH ARE NOT SPECIFIED.

TOLERANCE ON LOFTED DELINEATIONS IS

DWG SIZE 34 X 87

PRINTING INFO ONLY
FULL SIZE SHEET AREA (36 X)= SQ. FT.
1/2 SIZE SHEET AREA (1/4 OF FULL)= SQ. FT.

PRINT TRIM LINE

LDW280-51609

LDW280-51609

02/02 NAS 9-1100

	GRUMMAN AIRCRAFT ENGRG CORP., BETHPAGE, L. I., NEW YORK		
LEM	SIZE J	CODE IDENT NO. 26512	LDW280-51609
MODEL OR END ITEM	SCALE 1:5		SHEET 4

ING 32.2 REV 3-65

GRUMMAN AIRCRAFT ENGINEERING CORP.
CODE IDENT NO. 26512
ENGINEERING ORDER

DWG. NO. LDW280-51609	EO NO. A1
CONTROL INFO NO. LDW280A-2977	

REVISE DWG:

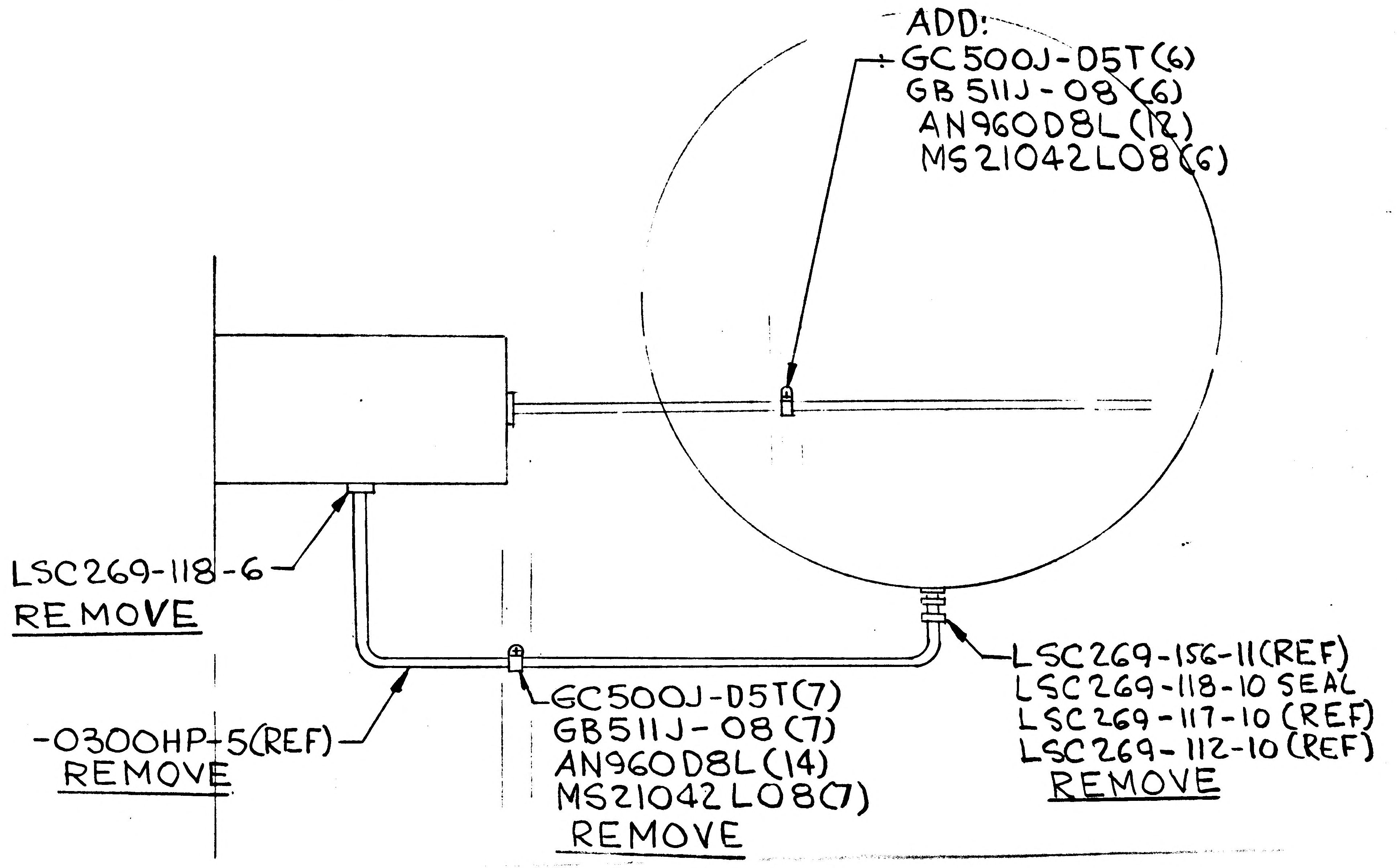

ADD:
GC500J-D5T(6)
GB511J-08(6)
AN960D8L(12)
MS21042L08(6)
LSC269-118-6
REMOVE
-0300HP-5(REF)
REMOVE
GC500J-D5T(7)
GB511J-08(7)
AN960D8L(14)
MS21042L08(7)
REMOVE
LSC269-156-11(REF)
LSC269-118-10 SEAL
LSC269-117-10 (REF)
LSC269-112-10 (REF)
REMOVE

ON-1 INSTL. SH4 ZONE A6 REMOVE
-0300HP-5 TUBE ASSY AND CALLOUTS AS SHOWN
SH4 ZONE A4 REMOVE
-0300HP-5 TUBE ASSY AND CALLOUT.
SH2. REMOVE.
LSC269-118-10(1) SEAL
LSC269-118-6 (1) SEAL
GC500J-D5T (1)
GB511J-08 (1)
AN960D8L (2)
MS21042L08(1)

ADD: ON SH-4 ZONE A6 CALLOUT AS SHOWN

DESCRIPTION OF EO.
ON-1 INSTL REMOVED -0300HP-5 TUBE ASSY AND CALLOUT,
GC500J-D5T(7), GB511J-08(7), AN960D8L(14), MS21042L08(7)
ADDED CALLOUT GC500J-D5T(6), GB511J-08(6),
AN960D8L(12), MS21042L08(6)

5

DETAIL SPEC REQ	☐	CL II ENGRG CHG	☒	CL I ENGRG CHG	☐	CCA 398 LCR 537	
REASON FOR EO	O₂ TANK REMOVED & LINE NOT REQD	DESCRIPTION OF EO	SEE ABOVE			GAEC EO RELEASE	11/9
MODEL	EFFECTIVITY: PROCURING ACTIVITY NO.	GAEC UNIT NO.	SUB CONTR UNIT NO.	DRAWING CHANGE REQD: REVISE DWG ✓ / RECORD EO	DISPOSITION OF PARTS: REWORK ✓ / SCRAP		
LM		LM-1(31)					

	2	VD1	SUPPORT	RELIAB. GROUP	GROUP LEADER	STRESS GROUP	LIAISON ENGRG	PROJ ENGRG	GOVT
APPROVED BY	JW	—	—	—	WJH			RMC	
DATE	11/3/66				11/3/66			11-3	11-5 66

PRIORITY C

DRAWING TITLE LINES INSTL. ENVIRONMENTAL & CONTROL SUBSYSTEM. DESCENT STAGE

DRAWING NO. LDW280-51609

EO NO. A1

ISSUED BY A.V. PURVINS x7033 SECTION VD1 (EQUP LINES) GROUP NO. 332 PL 35

01 NAS 9-1100

E

ENG 32.1 REV 3-65

GRUMMAN AIRCRAFT ENGINEERING CORP.
CODE IDENT NO. 26512
ENGINEERING ORDER

DWG. NO. LDW280-51609
EO NO. A1
CONTROL INFO NO. LDW280A-5071

FOR -1 INSTL IN F/D & B/M DELETE (1) LDW280-16009-11
DELETE (1) GS830G-75C112
ADD (1) LDW280-16009-31 FLEX HOSE
(CLEANLINESS LEVEL "N")
ADD (1) GS830G-75C24
(CLEANLINESS LEVEL "A")

DETAIL SPEC REQ	☐	CL II ENGRG CHG	☒	CL I ENGRG CHG	☐

5

REASON FOR EO: REDESIGN OF PIPING RUN IN DEADFACE AREA

DESCRIPTION OF EO: FOR -1 INSTL REMOVED (1) LDW280-16009-11 & (1) GS830G-75C112 ADDED (1) LDW280-16009-31 & (1) GS830G-75C24

GAEC EO RELEASE: FR 1/24/67

MODEL	EFFECTIVITY: PROCURING ACTIVITY NO.	GAEC UNIT NO.	SUB CONTR UNIT NO.
LM		LM-1 (31)	

DRAWING CHANGE REQD: REVISE DWG	RECORD EO	DISPOSITION OF PARTS: REWORK	SCRAP
✓		✓	

APPROVED BY	Jap			JW/CHC	WJH			
DATE	1/23/67			1-23-67	1/2-1-67		1-23	1-23-67
1	VD1	SUPPORT	RELIAB. GROUP	GROUP LEADER	STRESS GROUP	LIAISON ENGRG	PROJ ENGRG	~~GOVT~~

PRIORITY: C
DRAWING TITLE: LINES INSTL ECS DESCENT STAGE
DRAWING NO.: LDW280-51609
EO NO.: A4

ISSUED BY HUGH RYAN 1-18-67 X1441 SECTION VDI (EQUIP LINES) GROUP NO. 332 PL 35

01 NAS 9-1100

B

ENG 32.1 REV 3-65

GRUMMAN AIRCRAFT ENGINEERING CORP.
CODE IDENT NO. 26512
ENGINEERING ORDER

* *

DWG. NO. LDW280-51609 | EO NO. A5
CONTROL INFO NO. LM-5-11834

THIS EO CANCELS EO A4 AND THIS IS A REVISION OF E.O. A3

ON -1 INSTL
ADD CALLOUT TO VIEW *-* AS SHOWN

ADD TO F/D & BM
LSC 269-161-4 PLUG
LSC 269-118-4 SEAL

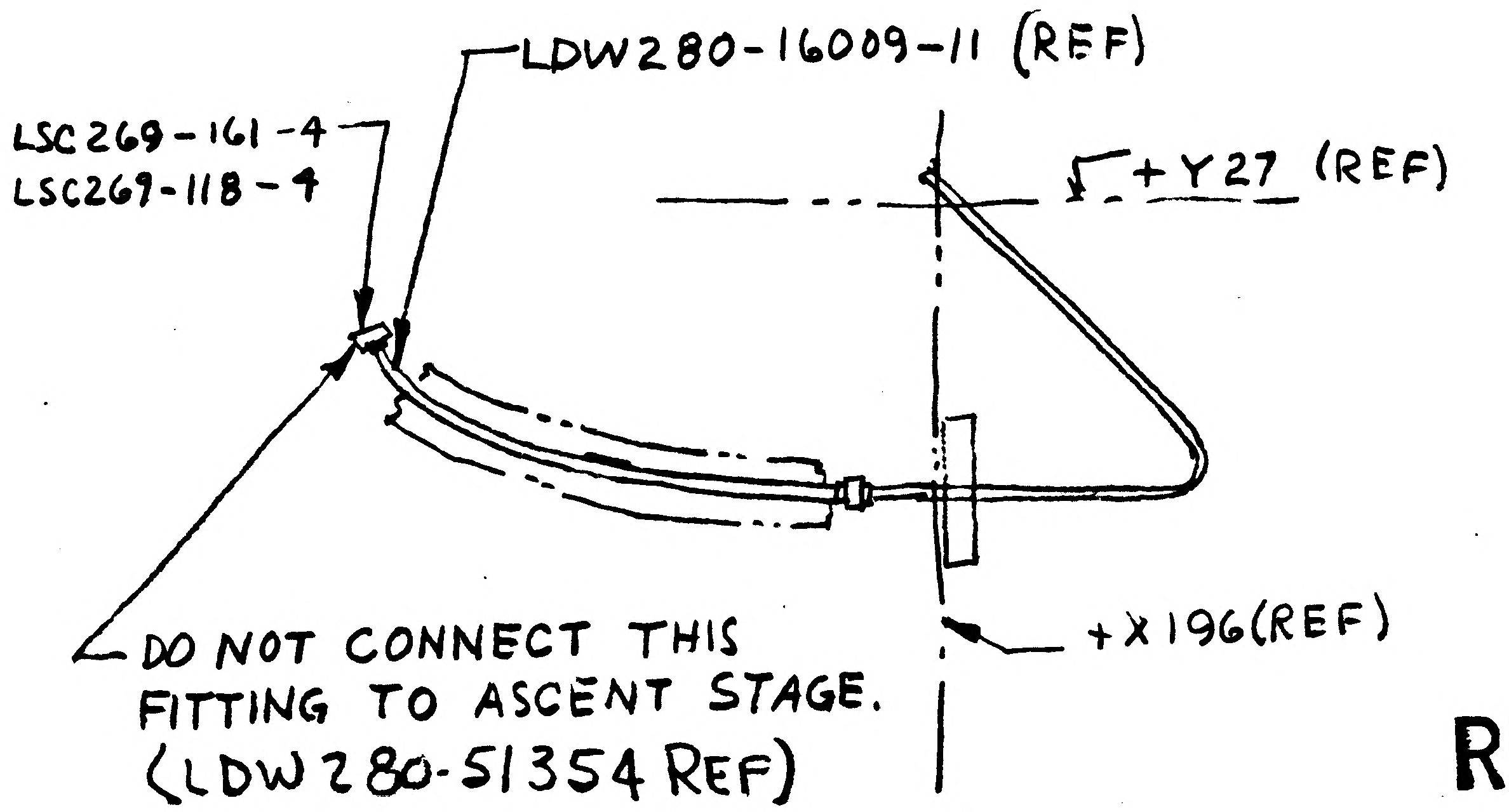
LDW280-16009-11 (REF)
LSC269-161-4
LSC269-118-4
+Y27 (REF)
+X196 (REF)
DO NOT CONNECT THIS FITTING TO ASCENT STAGE. (LDW280-51354 REF)

VIEW *-*

RELEASED BY LIAISON

DETAIL SPEC REQ	☐	CL II ENGRG CHG	☑	CL I ENGRG CHG	☐

REASON FOR EO: DESCENT WATER SYSTEM NOT REQD ON LM-1 MISSION

DESCRIPTION OF EO: THIS EO CANCELS EO A4 REF EO A-3
ON -1 INSTL
ADDED CALLOUT TO FIELD OF DWG. VIEW *-*
ADDED TO F/D & BM LSC 269-161-4 PLUG & LSC 269-118-4 SEAL

GAEC EO RELEASE: ✓ FR

MODEL	PROCURING ACTIVITY NO.	GAEC UNIT NO.	SUB CONTR UNIT NO.
LM		LM-1 (31)	

DRAWING CHANGE REQD: REVISE DWG ✓ | RECORD EO

DISPOSITION OF PARTS: REWORK ✓ | SCRAP

APPROVED BY		—	—	LW	WJH		RMC (EO)		
DATE	2/13/67			2/13/67	2/13/67	2/14	2-17-67	2/15/67	
1	VDI	SUPPORT	RELIAB. GROUP	GROUP LEADER	STRESS GROUP	LIAISON ENGRG	PROJ ENGRG	~~CONT~~	

PRIORITY: C

DRAWING TITLE: LINES INSTL ECS DESCENT STAGE

DRAWING NO. LDW280-51609

EO NO. A5

ISSUED BY HUGH RYAN X7033 2-9-67 SECTION VDI (EQUIP LINES GROUP NO. 332 PL 5

01

NAS 9-1100

ENG 32.1 REV 3-65

GRUMMAN AIRCRAFT ENGINEERING CORP.
CODE IDENT NO. 26512
ENGINEERING ORDER

DWG. NO. LDW280-51609
EO NO. A6
CONTROL INFO NO. LM83-1632

REF EO A3

THIS EO IS ISSUED IN CONJUNCTION WITH LDW280-17389 E.O.

ON -1 INSTL IN F/D & B/M ADD LDW280-17389-079 ECW-4 (1)
ADD LDW280-17389-080 ECW-4 (1)
DELETE LDW280-17389-024 ECW-4 (1)

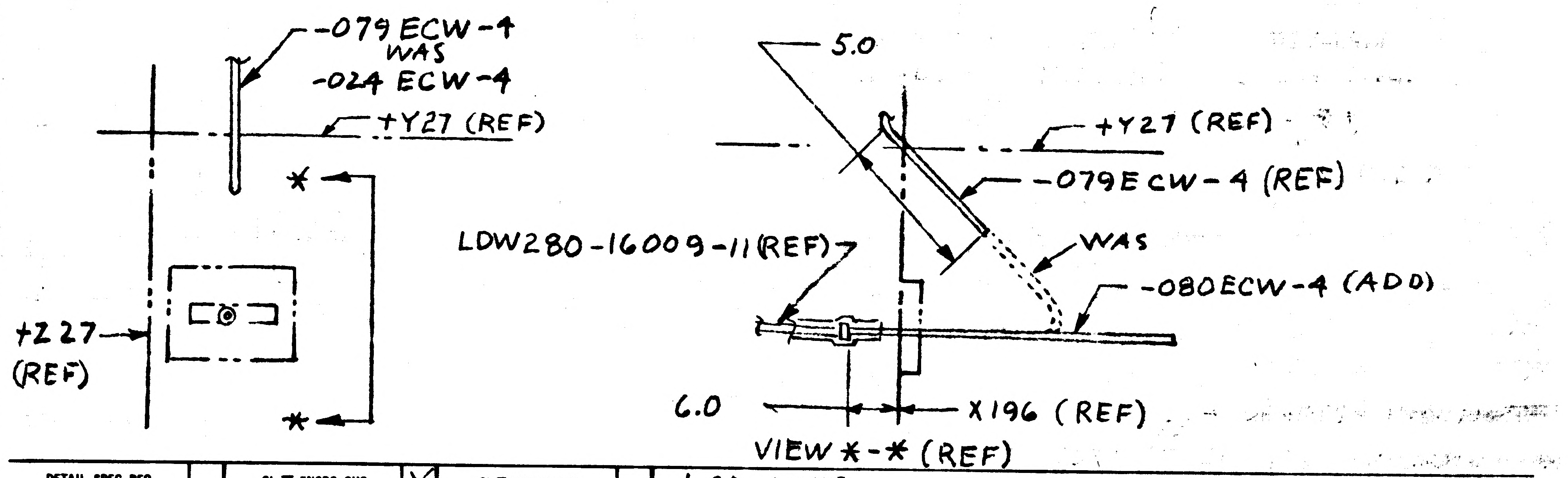
-079 ECW-4
WAS
-024 ECW-4
+Y27 (REF)
*
+Z27
(REF)
*
5.0
+Y27 (REF)
-079 ECW-4 (REF)
LDW280-16009-11 (REF)
WAS
-080 ECW-4 (ADD)
6.0
X196 (REF)
VIEW *-* (REF)

DETAIL SPEC REQ	☐	CL II ENGRG CHG	☒	CL I ENGRG CHG	☐	LCD 1078

83

REASON FOR EO: FITTING MUST BE LOCATED ABOVE CLAMP FOR ASSY

DESCRIPTION OF EO: REF EO A3
ON -1 INSTL
ADDED LDW280-17389-079 ECW-4(1) &
-080 ECW-4(1) DELETED -024 ECW-4

GAEC EO RELEASE: JK 9/1/

MODEL	EFFECTIVITY: PROCURING ACTIVITY NO.	GAEC UNIT NO.	SUB CONTR UNIT NO.
LM		LM-1 (31)	

DRAWING CHANGE REQD: REVISE DWG	RECORD EO	DISPOSITION OF PARTS: REWORK	SCRAP
✓		✓	

APPROVED BY		Jap		WD. RS		JC PE	
DATE	8-23-67	8/31/67		8-23-67		8-24-7	8-23-67
	SYS	~~SUPPORT~~ VDI	RELIAB. GROUP	GROUP LEADER	STRESS GROUP	LIAISON ENGRG	PROJ ENGRG

8-25

PRIORITY: C
DRAWING TITLE: LINES INSTL ECS DESCENT STAGE
DRAWING NO. LDW280-51609
EO NO. A6

ISSUED BY HUGH RYAN X2407 8-19-67 SECTION VDI (EQUIP LINES) GROUP NO. 332 PL 83

01 NAS 9-1100

ENG 32.1 REV 3-65

GRUMMAN AIRCRAFT ENGINEERING CORP.
CODE IDENT NO. 26512
ENGINEERING ORDER

DWG. NO. LDW280-51609
EO NO. B1
CONTROL INFO NO. LDW280B 1562

ADD TO F/D & B/M
LDW360-21265-1

DETAIL SPEC REQ ✓ | CL II ENGRG CHG ☐ | CL I ENGRG CHG ☐

(5)

REASON FOR EO: TO REVISE NHA OF LDW360-21265 (CDR LIST)

DESCRIPTION OF EO: ADDED TO F/D & B/M LDW360-21265-1

GAEC EO RELEASE: 2/21/68

MODEL	EFFECTIVITY: PROCURING ACTIVITY NO.	GAEC UNIT NO.	SUB CONTR UNIT NO.
LM		NOT REQD	

DRAWING CHANGE REQD: REVISE DWG ✓ | RECORD EO

DISPOSITION OF PARTS: REWORK NOT | SCRAP REQD

		SUPPORT	RELIAB. GROUP	GROUP LEADER	STRESS GROUP	LIAISON ENGRG	PROJ ENGRG	~~GOVT~~
APPROVED BY								
DATE	1/19/68 VDI			1/19/68	1-[illegible]-68		1/19/68	2-21-68

PRIORITY: E
DRAWING TITLE: LINES INSTL ECS. DESCENT STAGE
DRAWING NO.: LDW280-51609
EO NO.: B1

ISSUED BY K. BIRKEL
SECTION EQUIP LINES VDI
GROUP NO. 332
PL 25

0 1

NAS 9-1100

LDW280-51642 A

MODEL OR END ITEM	NEXT ASSY	MODULE OR SER NO.	REQD PER MODULE OR END ITEM
LM	LDW280-51553	LM-1(31)	1

PART NO. LDW280-51642-1 | GAEC SCH NO. 52

MODEL OR END ITEM	NEXT ASSY	MODULE OR SER NO.	REQD PER MODULE OR END ITEM
LM	LDW280-54553	LM-15(45)	1
		LM-14(44)	1
		LM-13(43)	1
		LM-12(42)	1
		LM-11(41)	1
		LM-10(40)	1
		LM-9(39)	1
		LM-8(38)	1
		LM-7(37)	1
		LM-6(36)	1
		LM-5(35)	1
	LDW280-54553	LM-4(34	1
	LDW280-53553	LM-3(33)	1
LM	LDW 280-52553	LM-2(32)	1

PART NO. LDW280-51642-5 | GAEC SCH NO. 52

MODEL OR END ITEM	NEXT ASSY	MODULE OR SER NO.	REQD PER MODULE OR END ITEM

PART NO. | GAEC SCH NO.

WORK PKG FUNCTION NO. 110 5

SH REV STATUS: FOR DESCRIPTION OF REV SEE SUBQ SH

SHEET	1.00	1.10	1.11	2.00	3.00				
REV	A	A	A	A	A				
SHEET									
REV									
SHEET									
REV									

LAST SECT LTR USED M
LAST DASH NO. USED -5
GRUMMAN REL INFO A
PRIM NO. 220 JK(001) MP-16 A [illegible]

UNLESS OTHERWISE SPECIFIED DIMENSIONS ARE IN INCHES.
TOLERANCE UNLESS SPECIFIED FRACTIONS - DECIMALS – ANGLES ± 1/32 ±.020 ± 1/2°
ORIG DWG AUTH
DETAIL SPEC REQUIREMENT
CLASS II ENGRG CHANGE
CLASS I ENGRG CHANGE

CONTRACT NO. NAS9-1100
LINE ITEM
DOCUMENTATION TYPE II

DRAWN BY V.CHRISTINA
LAYOUT BY V.CHRISTINA
CHECKED BY
GR LEADER W.BISCHOFF
VEH DES INT W.BISCHOFF 11/22/66
STRUCTURES W. HAUCK 11/29/66
STRUCTURES F.E.B. 11/29/66
WEIGHTS
RELIABILITY
PROJ ENGR R.CARBEE 11/29/66
REL GROUP C. IFF 11/29/66

GRUMMAN AIRCRAFT ENGRG CORP
BETHPAGE, L. I., NEW YORK

SHIELD INSTL
DESCENT STAGE~QUAD III LWR
METEOROID PROTECTION

SIZE B | CODE IDENT NO. 26512 | LDW280-51642 | A Ⓐ
SCALE NONE | SHEET 1.00 OF 5

ENG 77.1 12-65

THIS DWG. SUPERSEDES LDW280-51642 NO CHG 11-29-66

01

NAS 9-1100

REVISIONS

CHANGE LTR	ITEM NO.	SHEET NO.	ZONE	GRUMMAN INFO ONLY	DET SPEC	CLASS I	CLASS II	ENGRG ORDER	DESCRIPTION	EFFECTIVITY	DISPOSITION OF EXISTING PARTS		CHANGED BY AND DATE	ENGRG APPD	GOVT APPD
											REWORK	SCRAP			
								RETRACED NO CHG. LAST REV NO CHG ARTHUR STERNBERG 6-16-67. ADDED SH. 1.10							
A	1	1.10, 2.00 1.00, 3.00	5A				✓	EO A1	ADDED -3 INSTL & LDW280-18206-15,-17,&-19(1EA) EFF LM-2(32) THRU LM-15(45) ADDED SECT **-**, ***-*** ****-****, *****-*****. REMOVED LM-2(32) THRU LM-15 EFF FROM -1 INSTL. ADDED GT835P-8 TAPE & MS20470B3 RIVETS TO -3 INSTL	LM-2 THRU LM-15	✓		ART STERNBERG 6-19-67		
	2	1.10						EO A2	EO A2 NOT APPLICABLE	NOT REQD	NOT	REQD			
	3	1.10 2.00 & 3.00	3A				✓	EO A3 LCR 746	REMOVED LDW280-18206-11(4) ON -3 INSTL ADDED LDW280-18206-21(4) ON -3 INSTL.	LM-2 THRU LM-15	✓				
	4	1.10 2.00 3.00	6C 7C 4C 2A					EO A4	ON -3 INSTL REPLACED LDW280-18140-17 WITH LDW280-18140-21(1 REQD) REVISED NOTE 1 ADDED NOTE 3 ON -1 & -3 DELETED LDW280-18206-13 & REPLACED GT835B-6N WITH GT835C-4 (AS REQD). ON -1 REPLACED LDW280-18206-11(4) WITH LDW280-18206-21(4) ON -1 & -3 ADDED LDW280-18140-23 (2 REQD/INSTL)	LM-1 THRU LM-15					
	5	1.10 2.00 & 3.00	7C					EO A5	ON -1 & -3 LDW280-18140-25 WAS -19. REVISED PICTURE OF -23 NEAR SIDE WAS FAR SIDE	LM-1 THRU LM-15					
	6	1.10 & 3.00						EO A6	ADDED NOTES 4 & 5	LM-1 THRU LM-15					
	7	1.10 & 3.00						EO A7	REF EO A6 REMOVED NOTE 4 & ADDED SHOP NOTE	LM-1 THRU LM-15					
	8	1.00, 1.10 2.00 & 3.00	2B 5A				✓	EO A8	IN FLD, B/M MOD BLK ADDED -5 INSTL (WAS -3 INSTL) & SECT H-H	LM-2 THRU LM-15	-1				
	9	1.10 2.00 3.00	3C 6D				✓	EO A9	REF EO A8 - REVISED CALLOUT GR500-4A(14) WAS (8), AN960-8L(14) WAS (8) - "UNDER TAIL WAS UNDER HEAD, ADDED TAPE TO BOTH SIDES" TO GT835P-8 CALLOUT REV DIM 5±1/4 WAS 3 1/2 ± 1/4, 5 1/4 WAS 3 1/2 IN NEXT ASSY BLOCK REVISED -5 QUANT. & NEXT ASSY SAME AS -3 WAS -1. IN DISPOSITION OF PARTS REMOVED -1 IN REWORK ADDED -3 TO SCRAP	LM-2 THRU LM-15	✓				
	10	1.10, 2.00 & 3.00						EO A10	IN FLD & B/M ON-5 REMOVED LDW280-18206-15,-17-&-19	LM-2 THRU LM-15					
	11	1.10 3.00	3B						ADDED VIEW "J-J" & NOTE 6	LM-1 THRU LM-15	NOT	REQD			

FOR CONTINUATION OF REVISIONS SEE SHEET 1.11

GRUMMAN AIRCRAFT ENGRG CORP, BETHPAGE, L. I., NEW YORK

SIZE	CODE IDENT NO.		
B	26512	LDW280-51642	A Ⓐ
SCALE NONE			SHEET 1.10

ENG 77.3 5-66

01

NAS 9-1100

REVISIONS

CHANGE LTR	ITEM NO.	SHEET NO.	ZONE	GRUMMAN INFO ONLY	DET SPEC	CLASS I	CLASS II	ENGRG ORDER	DESCRIPTION	EFFECTIVITY	DISPOSITION OF EXISTING PARTS REWORK	DISPOSITION OF EXISTING PARTS SCRAP	CHANGED BY AND DATE	ENGRG APPD	~~GOVT~~ APPD
A	12	1.11 & 3.00	6D 3C						ADDED DETAIL "K" & DETAIL "L"	LM-2 THRU LM-15	NOT	REQD ③	A STEUBERG 6-19-67		8/7/67
	13	1.11, 3.00	6D 3C						REF EO A8 & A9: +Y81.00 (REF) SHOULD BE -Z 81.00 (REF) -Z 81.00 (REF) SHOULD BE +Y81.00 (REF)	NOT REQD					

FOR CONTINUATION OF REVISIONS SEE SHEET ________

GRUMMAN AIRCRAFT ENGRG CORP, BETHPAGE, L. I., NEW YORK

SIZE	CODE IDENT NO.		
B	26512	LDW280-51642	A
SCALE NONE		SHEET 1.11	

ENG 77.3 5-65

01

NAS 9-1100

QTY PER ASSEMBLY		CODE IDENT	PART NO.	I&T	NOMENCLATURE OR DESCRIPTION	MATERIAL	GOVT SPEC	COML SPEC	STOCK SIZE	PROCESS SYM	FINISH NO.	ZONE
-5	-1											
			GT835C-4	E	TAPE	GRUMMAN STD						
			GT835P-8		TAPE	GRUMMAN STD						
			MS20470B3		RIVET	STD PART						
4			LDW280-18206-21		CLAMP	SEE DWG						3A
	4		LDW280-18206-11		CLAMP							2B
2	2		LDW280-18201-19		DOUBLER							5C 6C
8	8		-17		CLIP							7C
8	8		-15		CLIP							4B
1	1		LDW280-18201-11		COVER							5C
1			LDW280-18140-29		END PLATE							4D
1			-27		END PLATE							7D
1	1		-25		SHIELD							7C
2	2		-23		PLATE							6B
1			-21		SHIELD							5C
	1		-17		SHIELD							4C
	1		-15		END PLATE							3B
	1		-13		END PLATE							7B
1	1		LDW280-18140-11	E	SHIELD CORRUGATED	SEE DWG						6B
			LDW280-51642-5	E	SHIELD INSTL					NONE	NONE	
			LDW280-51642-1	E	SHIELD INSTL					NONE	NONE	

SYM OR NO.	PROCESS OR FINISH	GRUMMAN SPEC OR MILITARY SPEC	SYM OR NO.	PROCESS OR FINISH	GRUMMAN SPEC OR MILITARY SPEC	SYM OR NO.	PROCESS OR FINISH	GRUMMAN SPEC OR MILITARY SPEC

I & T: IDENTIFICATION AND TRACEABILITY IN ACCORDANCE WITH : NONE

GRUMMAN AIRCRAFT ENGRG CORP, BETHPAGE, L. I., NEW YORK

SIZE	CODE IDENT NO.		
B	26512	LDW280-51642	A

SCALE NONE

SHEET 2.00

ENG 77.2 7-65

01

NAS 9-1100

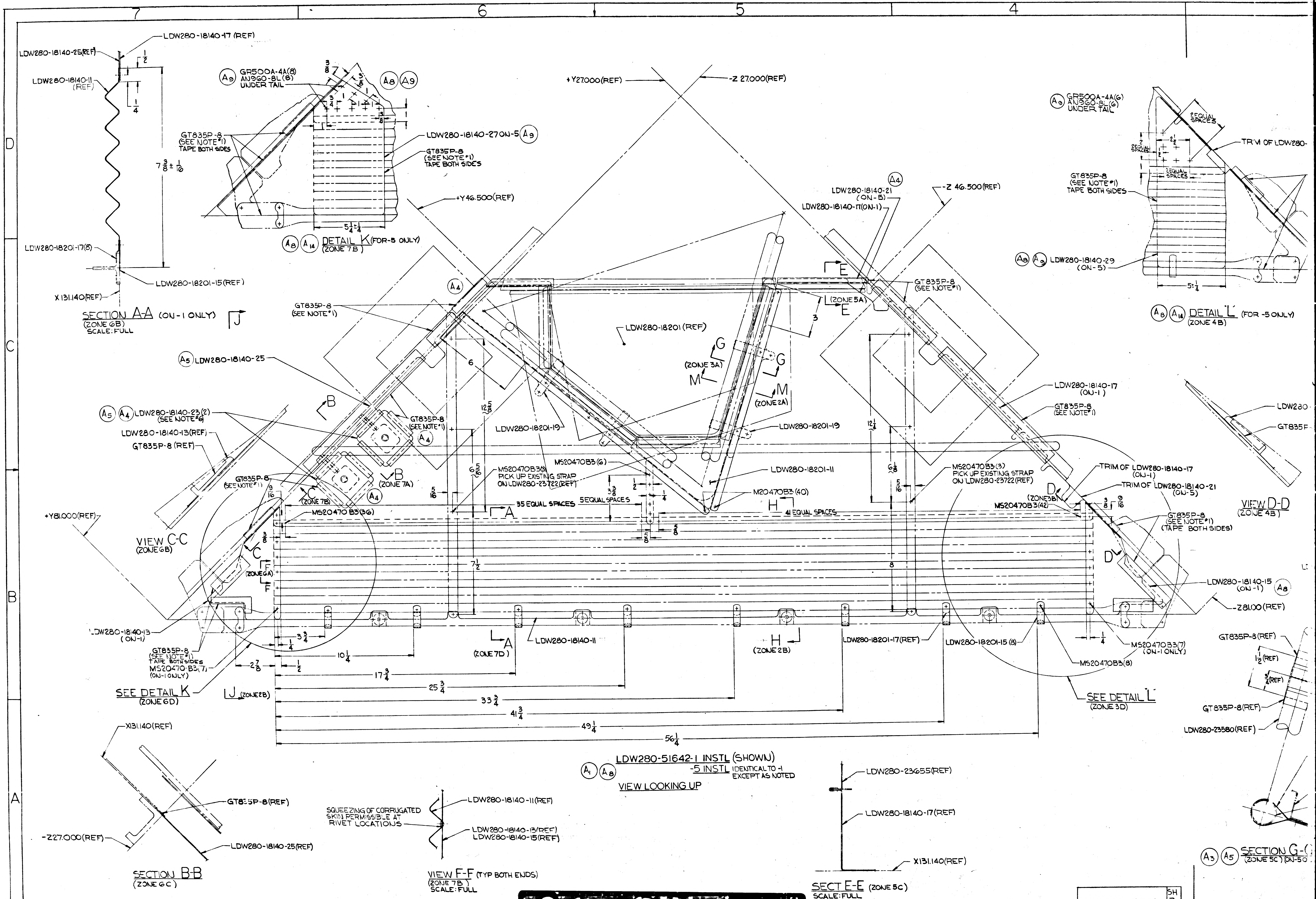

7
6
5
4
D
C
B
A
LDW280-18140-17 (REF)
LDW280-18140-25(REF)
LDW280-18140-11 (REF)
1/2
1/4
7 3/8 ± 1/16
LDW280-18201-17(8)
LDW280-18201-15 (REF)
X 131.140(REF)
SECTION A-A (ON-1 ONLY)
(ZONE 6B)
SCALE: FULL
J
A9 GR500A-4A(8) AN960-8L(8) UNDER TAIL
3/8
5/8
A8 A9
3/4
GT835P-8 (SEE NOTE*1) TAPE BOTH SIDES
LDW280-18140-27ON-5 A9
GT835P-8 (SEE NOTE*1) TAPE BOTH SIDES
5 1/4 ± 1/4
A8 A14 DETAIL K (FOR-5 ONLY)
(ZONE 7B)
+Y27.000(REF)
-Z 27.000(REF)
+Y46.500(REF)
A4
LDW280-18140-21 (ON-5)
LDW280-18140-17(ON-1)
-Z 46.500(REF)
A9 GR500A-4A(6) AN960-8L(6) UNDER TAIL
2 EQUAL SPACES
TRIM OF LDW280-
GT835P-8 (SEE NOTE*1) TAPE BOTH SIDES
A8 A9 LDW280-18140-29 (ON-5)
5 1/4
A8 A14 DETAIL "L" (FOR-5 ONLY)
(ZONE 4B)
A4
GT835P-8 (SEE NOTE*1)
E
E
(ZONE 5A)
3
LDW280-18201 (REF)
G
G
(ZONE 3A)
M
M
(ZONE 2A)
A5 LDW280-18140-25
B
GT835P-8 (SEE NOTE*1)
6
12 5/8
A5 A4 LDW280-18140-23(2) (SEE NOTE*6)
LDW280-18140-13(REF)
GT835P-8 (REF)
GT835P-8 (SEE NOTE*1)
A4
B
(ZONE 7A)
A4
C
(ZONE 7B)
LDW280-18201-19
LDW280-18201-19
LDW280-18140-17 (ON-1)
GT835P-8 (SEE NOTE*1)
LDW280
GT835P
12 1/4
6 5/16
MS20470B3(8) PICK UP EXISTING STRAP ON LDW280-23722(REF)
MS20470B3(6)
LDW280-18201-11
M20470B3(40)
MS20470B3(3) PICK UP EXISTING STRAP ON LDW280-23722(REF)
6 1/8
5/16
TRIM OF LDW280-18140-17 (ON-1)
TRIM OF LDW280-18140-21 (ON-5)
D
(ZONE 3B)
MS20470B3(42)
3/8 9/16
VIEW D-D
(ZONE 4B)
9/16
MS20470 B3(36)
5/16
A
35 EQUAL SPACES
5 EQUAL SPACES
3 3/8
1/2
1/4
H
41 EQUAL SPACES
5/8
5/8
+Y81.000(REF)
VIEW C-C
(ZONE 6B)
3/8
C
F
(ZONE 6A)
F
7 1/2
8
GT835P-8 (SEE NOTE*1) (TAPE BOTH SIDES)
D
LDW280-18140-15 (ON-1) A8
-Z81.00 (REF)
LDW280-18140-13 (ON-1)
GT835P-8 (SEE NOTE*1) TAPE BOTH SIDES
MS20470-B3(7) (ON-1 ONLY)
3 3/4
1/4
2 7/8
1/2
10 1/4
A
(ZONE 7D)
LDW280-18140-11
H
(ZONE 2B)
LDW280-18201-17(REF)
LDW280-18201-15 (8)
1/4
MS20470B3(7) (ON-1 ONLY)
MS20470B3(8)
GT835P-8(REF)
1/2 (REF)
3/4 (REF)
GT835P-8(REF)
LDW280-23580(REF)
SEE DETAIL K
(ZONE 6D)
J (ZONE 2B)
17 3/4
25 3/4
33 3/4
41 3/4
49 1/4
56 1/4
SEE DETAIL "L"
(ZONE 3D)
X131.140(REF)
GT835P-8(REF)
-Z27.000(REF)
LDW280-18140-25(REF)
SECTION B-B
(ZONE 6C)
SQUEEZING OF CORRUGATED SKIN PERMISSIBLE AT RIVET LOCATIONS
LDW280-18140-11(REF)
LDW280-18140-13(REF)
LDW280-18140-15(REF)
VIEW F-F (TYP BOTH ENDS)
(ZONE 7B)
SCALE: FULL
A1 A8 LDW280-51642-1 INSTL (SHOWN)
-5 INSTL IDENTICAL TO -1 EXCEPT AS NOTED
VIEW LOOKING UP
LDW280-23655(REF)
LDW280-18140-17(REF)
X131.140(REF)
SECT E-E (ZONE 5C)
SCALE: FULL
A3 A5 SECTION G-
(ZONE 5C)(ON-5)

LDW280-51642 SH 3

01/02 NAS 9-1100

6

7

4

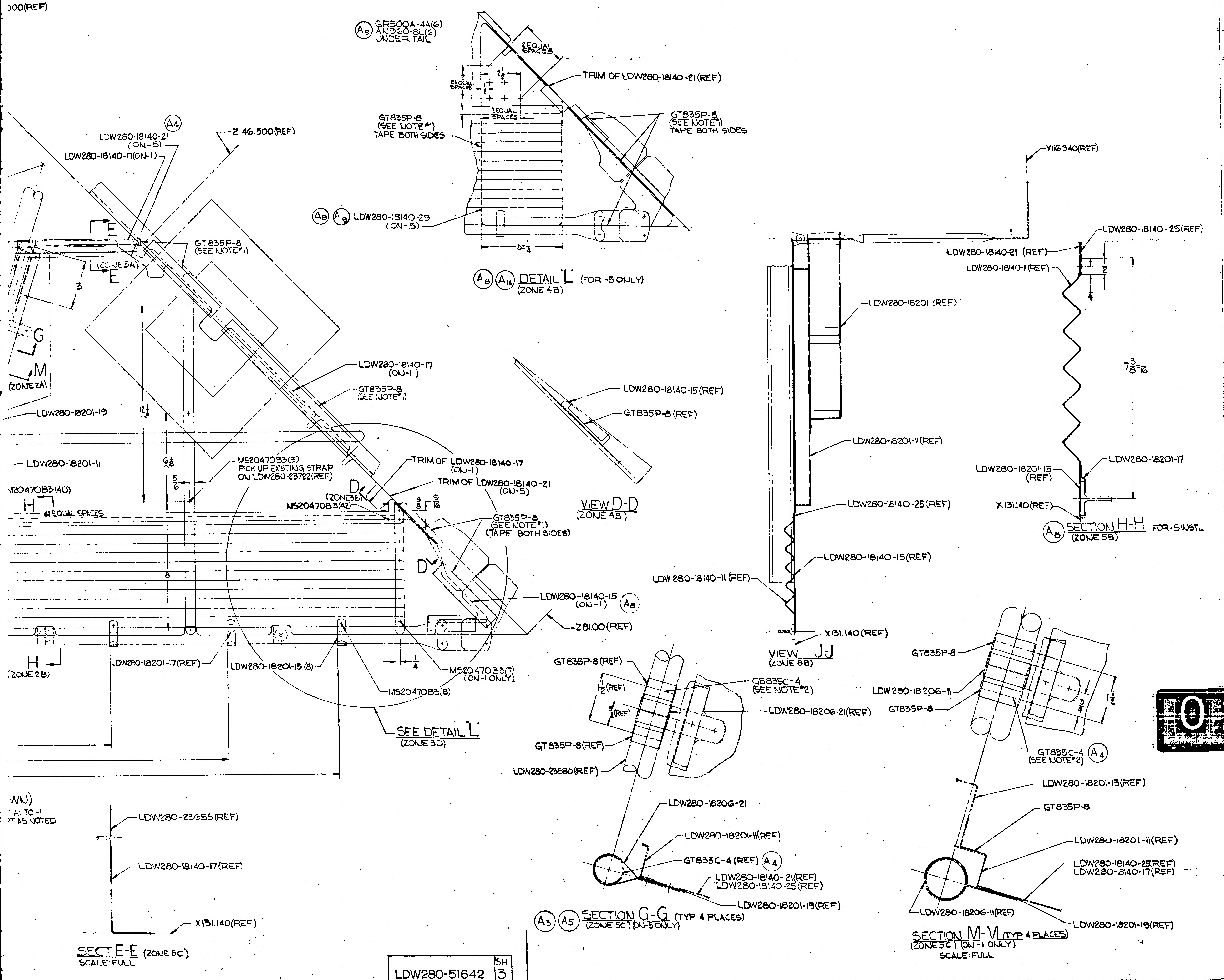
000(REF)
Ⓐ9 GR500A-4A(6)
AN960-8L(6)
UNDER TAIL
2 EQUAL SPACES
TRIM OF LDW280-18140-21 (REF)
2 EQUAL SPACES
GT835P-8
(SEE NOTE #1)
TAPE BOTH SIDES
GT835P-8
(SEE NOTE #1)
TAPE BOTH SIDES
Ⓐ8 Ⓐ9 LDW280-18140-29
(ON-5)
5 1/4
Ⓐ8 Ⓐ14 DETAIL "L" (FOR -5 ONLY)
(ZONE 4B)
LDW280-18140-21 Ⓐ4
(ON-5)
LDW280-18140-11(ON-1)
-Z 46.500(REF)
E
E
(ZONE 5A)
GT835P-8
(SEE NOTE #1)
3
G
M
(ZONE 2A)
LDW280-18201-19
LDW280-18201-11
LDW280-18140-17
(ON-1)
GT835P-8
(SEE NOTE #1)
12 1/4
6 1/8
5/16
MS20470B3(3)
PICK UP EXISTING STRAP
ON LDW280-23722(REF)
MS20470B3(40)
H
41 EQUAL SPACES
D
(ZONE 3B)
MS20470B3(42)
TRIM OF LDW280-18140-17
(ON-1)
TRIM OF LDW280-18140-21
(ON-5)
3/8
9/16
GT835P-8
(SEE NOTE #1)
(TAPE BOTH SIDES)
D
8
LDW280-18140-15
(ON-1) Ⓐ8
-Z81.00(REF)
H
(ZONE 2B)
LDW280-18201-17(REF)
LDW280-18201-15 (8)
MS20470B3(8)
1/4
MS20470B3(7)
(ON-1 ONLY)
SEE DETAIL "L"
(ZONE 3D)
LDW280-18140-15(REF)
GT835P-8(REF)
VIEW D-D
(ZONE 4B)
X116.340(REF)
LDW280-18201 (REF)
LDW280-18201-11(REF)
LDW280-18140-25(REF)
LDW280-18140-15(REF)
LDW 280-18140-11 (REF)
X131.140 (REF)
VIEW J-J
(ZONE 8B)
LDW280-18140-25(REF)
LDW280-18140-21 (REF)
LDW280-18140-11(REF)
2
1/4
7 3/8 ± 1/16
LDW280-18201-15
(REF)
LDW280-18201-17
X131.140(REF)
Ⓐ8 SECTION H-H FOR-5 INSTL
(ZONE 5B)
GT835P-8(REF)
GB835C-4
(SEE NOTE #2)
1 1/2 (REF)
3/4 (REF)
LDW280-18206-21(REF)
GT835P-8(REF)
LDW280-23580(REF)
LDW280-18206-21
LDW280-18201-11(REF)
GT835C-4 (REF) Ⓐ4
LDW280-18140-21(REF)
LDW280-18140-25(REF)
LDW280-18201-19(REF)
Ⓐ3 Ⓐ5 SECTION G-G (TYP 4 PLACES)
(ZONE 5C) (ON-5 ONLY)
GT835P-8
LDW280-18206-11
GT835P-8
3/4
1 1/2
GT835C-4 Ⓐ4
(SEE NOTE #2)
LDW280-18201-13(REF)
GT835P-8
LDW280-18201-11(REF)
LDW280-18140-25(REF)
LDW280-18140-17(REF)
LDW280-18206-11(REF)
LDW280-18201-19(REF)
SECTION M-M (TYP 4 PLACES)
(ZONE 5C) (ON-1 ONLY)
SCALE: FULL
NN)
CAL TO -1
PT AS NOTED
LDW280-23655(REF)
LDW280-18140-17(REF)
X131.140(REF)
SECT E-E (ZONE 5C)
SCALE: FULL

NOTES:

1. TAPE DOWN EDGES OF SHIELD TO EXISTING STRUCTURE WITH GT835P-8 TAPE AS REQD. MAX SPACING BETWEEN GT835P-8 IS TO BE 2 INCHES.
2. ONE LAYER OF GT835C-4 TAPE. DO NOT LAP JOINTS; BUTT JOINTS 1/16 MAX GAP PERMISSIBLE.
3. DURING INSTL OR ASSY OF METEOROID SHIELD SUB-ASSY OR DETAILS, PARTS MAY BE TRIMMED TO INSURE PROPER CLEARANCE WITH STRUCTURAL PENETRATIONS PROPELLANT. LINES & WIRES CLEARANCE TO BE 1/4 MAY
4. EXTRANEOUS HOLES TO BE PLUGGED WITH MS20470B
5. FOR SCRATCHES, DENTS, WRINKLES & OIL CANNING SEE LPC280-16 REV "A"
6. LDW280-18140-23 IS TO BE TAPED AFTER ALINEMENT WITH LINES.

MANUFACTURING OPERATIONS UNLESS OTHERWISE SPECIFIED NOTES CHECKED √ APPLY TO THIS DWG.	
PART NUMBER AND ALL OTHER MARKINGS IN REGION MARKED ⊠ USE BOTH SIDES IF NECESSARY.	
FILLET AND INSIDE CORNER RADII TOLERANCES .016R TO .062R ± .010 .063R TO .250R ± .015 OVER .250R ± .030	
DEPTH SHOWN FOR TAPPED HOLES IS FULL THDS. 2-3 IMP THDS. BEYOND PERMISSIBLE.	
EXTERNAL THREAD LENGTH SHOWN INCLUDES 2 IMPERFECT THREADS MAX.	
DO NOT CADMIUM PLATE & PAINT HOLES OR SURFACES MARKED WITH DOUBLE ASTERISK.	
MISMATCH STEP OF ± .005 PERMISSIBLE DUE TO CHANGE OF CUTTERS AT INSIDE INTERSECTING SURFACES.	
DIAMETERS MARKED MUST BE CONCENTRIC WITHIN FULL INDICATOR READING	
HOLES MUST BE KEPT FREE OF CHROME PLATING SOLUTION.	
ALL DIMENSIONS SHOWN TO BE MET AFTER CADMIUM PLATING. THICKNESS OF PLATE .0003 MIN. TO .0005 MAX. MIN. THICKNESS TO BE .0002 ON THREADED AREAS. NO ALLOWANCE FOR PLATING IN HOLES	
125 √ SURFACE ROUGHNESS INCLUDING REAMED HOLES PER MIL-STD-10	
200 √ FOR ALL DRILLED HOLES	
REMOVE ALL BURRS. BREAK ALL EDGES .015-.031	
INSPECTION INFORMATION MINIMUM PERMISSIBLE AVERAGE EDGE DISTANCE MARKED IS	
SYMBOL √ DENOTES SURFACE TO BE MACHINED	
UNLESS OTHERWISE SPECIFIED TOLERANCE ON FLANGES IS ± 1/32	
LENGTHS OF AN, NAS & MS AL ALY RIVETS SHORTER THAN 1 INCH ARE NOT SPECIFIED.	
TOLERANCE ON LOFTED DELINEATIONS IS	

22.2 SQ. FT.
5.5 SQ. FT.
PRINTING INFO ONLY
FULL SIZE SHEET AREA (36 X 89) =
1/2 SIZE SHEET AREA (1/4 OF FULL) =
PRINT TRIM LINE

02/02 NAS 9-1100

LDW280-51642 A

LDW280-51642 A

LDW280-51642 SH 3

	GRUMMAN AIRCRAFT ENGRG CORP., BETHPAGE, L. I., NEW YORK			
LM	SIZE J	CODE IDENT NO. 26512	LDW280-51642	A
MODEL OR END ITEM	SCALE 1/2 & NOTED		SHEET 3 OF 3	

2 FRAMES

01
NAS 9-1100

ENG 32.2 REV 3-65

GRUMMAN AIRCRAFT ENGINEERING CORP.
CODE IDENT NO. 26512
ENGINEERING ORDER

DWG. NO. LEO 280 | EO NO. 1170
CONTROL INFO NO. LDW 280B5397

REVISE THE NEXT ASSEMBLY FOR THE FOLLOWING PARTS
EFFECTIVE LM-6(36) THRU LM-15(45)

DRAWING NO.	DASH* NO.	**NEW NEXT ASSY	***EXISTING NEXT ASSY	CHANGE NO	DWG TITLE
LDW 280-28816	-17	LDW 280-56553	LDW 280-54553	A7	SEE DWG.
LDW 280-52635	-5	LDW 280-56553	LDW 280-54553	C4	
LDW 280-28835	-9	LDW 280-56553	LDW 280-54553	C1	
LDW 280-51642	-5	LDW 280-56553	LDW 280-54553	B1	
LDW 280-51818	-1	LDW 280-56553	LDW 280-54553	A6	
LDW 280-53505	-1	LDW 280-56553	LDW 280-54553	A2	
LDW 280-53501	-21	LDW 280-56553	LDW 280-54553	G2	
LDW 280-53504	-3	LDW 280-56553	LDW 280-54553	B4	SEE DWG

SWIP

DETAIL SPEC REQ	CL II ENGRG CHG	CL I ENGRG CHG	✓ LCD 3179 ECP A-062-R PK 9	(5)

REASON FOR EO: REDUCTION OF THERMAL SHIELDING DUE TO REVISION OF PLUME HEATING RATES

DESCRIPTION OF EO: FOR * NEXT ASSY ** WAS ***

GAEC QC RELEASE: 10/

MODEL	PROCURING ACTIVITY NO.	GAEC UNIT NO.	SUB CONTR UNIT NO.
LM		LM6(36)	
		THRU LM15(45)	

DRAWING CHANGE REQD		DISPOSITION OF PARTS	
✓ REVISE DWG	RECORD EO	Not REQ REWORK	SCRAP

APPROVED BY	Jas	D.R		PSt	w/d		Jaf	
DATE	10/17/68	10/17/68		10/16/68	10/16/68		10/17/68	10/
	VD1	~~SUPPORT~~ THEM	RELIAB. GROUP	GROUP LEADER	STRESS GROUP	LIAISON ENGRG	PROJ ENGRG	~~CHIEF~~

PRIORITY	DRAWING TITLE	DRAWING NO.	EO NO.
C	SEE DRAWING	LEO 280	1170

11/1/68 F.L.
ISSUED BY ED MORRIS EXT 86046 SECTION V.D.1. GROUP NO. 33 PL 25

ENG 32.1 REV 3-65

GRUMMAN AIRCRAFT ENGINEERING CORP.
CODE IDENT NO. 26512
ENGINEERING ORDER

DWG. NO. LDW280-51642 | EO NO. B2
CONTROL INFO NO. LM-5-20724

IN F/D, B/M & M/B ~ (SH. 3, ZONES 4,5,6)
CREATE: -5-1 INSTL. IDENTICAL TO -5 EXCEPT AS NOTED.
-5-1 EFF. LM-5(35) THRU LM-15(45)
RESTRICT: -5 TO LM-2(32) THRU LM-4(34)

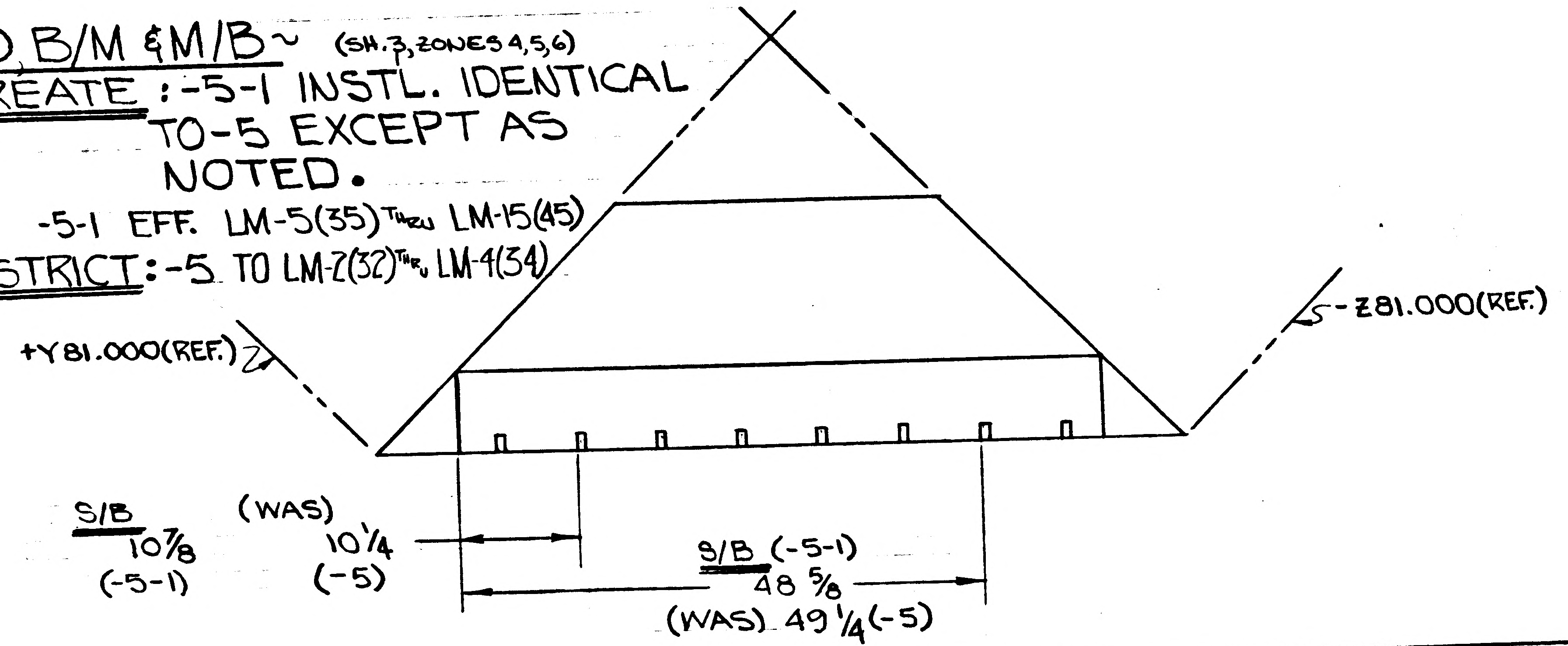

REWORK NOTE:
EXTRANEOUS HOLES TO BE LEFT OPEN.

(5)

DETAIL SPEC REQ ☐	CL II ENGRG CHG ☐	CL I ENGRG CHG ☑	LCD 2008								GAEC EO RELEASE C
REASON FOR EO: TO ELIMINATE INTERFERENCE WITH CLIPS ON NEXT HIGHER ASSY.			DESCRIPTION OF EO: IN F/D, B/M & W/B CREATED: -5-1 INSTL. RESTRICTED: -5 TO LM-2(32) THRU LM-4(34)								
MODEL	EFFECTIVITY			DRAWING CHANGE REQD		DISPOSITION OF PARTS		APPROVED BY			
	PROCURING ACTIVITY NO.	GAEC UNIT NO.	SUB CONTR UNIT NO.	REVISE DWG	RECORD EO	REWORK	SCRAP	DATE			
LM		LM-5(35) THRU	LM-15(45)	✓		-5		2 OCT. 68			

APPROVED BY	THERMO	SUPPORT	RELIAB. GROUP	GROUP LEADER	STRESS GROUP	LIAISON ENGRG	PROJ ENGRG	GOVT
	JAP			—	RH	CR	JAP	
DATE	10/3/68			—	10-19-68	10-19-68	10/3/68	10-22-68

PRIORITY	DRAWING TITLE	DRAWING NO.	EO NO.
C	SHIELD INSTALLATION ~ D/S, QUAD III LWR. METEOROID PROTECTION	LDW280-51642	B2

ISSUED BY CR LIAISON CM Green x86755 SECTION VEH. DES. INT. GROUP NO. 335 PL 25

0 1

NAS 9-1100

ENG 32.2 REV 3-65

GRUMMAN AIRCRAFT ENGINEERING CORP.
CODE IDENT NO. 26512
ENGINEERING ORDER

DWG. NO. LEO 280 | EO NO. 1292
CONTROL INFO NO. LDW280B7082

IN M/B FOR DASH NUMBERS LISTED BELOW, CHANGE N/A AS NOTED. QUANTITY REMAINS THE SAME
EFF LM-8(38) THRU LM-15(45).

DRAWING NO.	DASH NO.	N/A WAS	N/A IS	CHG LETTER
LDW280-28583	-53	LDW280-56553	LDW280-58553	C3
-28816	-17			B1
-28835	-9			C3
-51560	-7-1			C7
-51642	-5-1			B3
-51818	-1			A7
-52635	-5			C6
-52822	-13			A9
-53501	-21			G4
-53504	-3			B6
-53505	-1			A3
-53512	-1			B1
-53513	-5			B1
-53514	-41&-65			D1
-53644	-23			A6
-53646	-31			B2
-53649	-21			A7
-54506	-1			A2
-54568	-5			A3
-54600	-1-1			A4
-56671	-1			A1
-56731	-1&-3			A3
-66510	-3			B4
LDW280-66661	-3	LDW280-56553	LDW280-58553	A5

DETAIL SPEC REQ ☐ CL II ENGRG CHG ☐ CL I ENGRG CHG ✓ LCD 3179 CCA1278 PKG 50 ECP A062 (5)

REASON FOR EO: CHANGE 1/2 MIL H FILM TO 1/4 MIL H FILM

DESCRIPTION OF EO: SEE ABOVE

GAEC EO RELEASE: 2/27/9

MODEL	PROCURING ACTIVITY NO.	GAEC UNIT NO.	SUB CONTR UNIT NO.
LM		LM-8(38)	
		THRU	
		LM-15(45)	

DRAWING CHANGE REQD: ✓ REVISE DWG ☐ RECORD EO

DISPOSITION OF PARTS: NOT REQ'D (REWORK / SCRAP)

APPROVED BY		MMR						
DATE	2/13/69	2/17/69		2/12/69	2/18/69		2/17/69	2-27-69
	VDI	SUPPORT	RELIAB. GROUP	GROUP LEADER	STRESS GROUP	LIAISON ENGRG	PROJ ENGRG	

PRIORITY: C

DRAWING TITLE: SEE DWG.

DRAWING NO.: LEO 280

EO NO.: 1292

GDR022469

ISSUED BY W. KAY x87222/D. SHAPIRO x87222 SECTION V.D.I. GROUP NO. 335 PL 25

01

NAS 9-1100

ENG 32.1 REV 3-65

GRUMMAN AIRCRAFT ENGINEERING CORP.
CODE IDENT NO. 26512
ENGINEERING ORDER

DWG. NO. LEO 280
EO NO. 1444
CONTROL INFO NO. LDW280B7453

FOR THE DWGS LISTED BELOW DELETE LM-15(45) EFF FROM ALL DASH NOS. *

DWG NO.	CHANGE NO.	DWG NOMENCLATURE
LDW280-51642	B4	SEE DWG
-51818	B1	
-51823	A3	
-52571	A3	
-52574	B3	
LDW280 -52627	B4	SEE DWG

* APPLICABLE DASH NOS

DETAIL SPEC REQ ☐ CL II ENGRG CHG ☐ CL I ENGRG CHG ☑ LCD3587 PKG 56 PG 1 CCA 1821 (5)

REASON FOR EO: LM-15(45) NO LONGER REQD

DESCRIPTION OF EO: DELETED LM-15(45) EFF FROM -*

MODEL	PROCURING ACTIVITY NO.	GAEC UNIT NO.	SUB CONTR UNIT NO.
LM		LM-15(45)	

DRAWING CHANGE REQD: REVISE DWG ✓ RECORD EO
DISPOSITION OF PARTS: REWORK SCRAP ✓

	VDI	SUPPORT	RELIAB GROUP	GROUP LEADER	STRESS GROUP	LIAISON ENGRG	PROJ ENGRG	GOVT
APPROVED BY								
DATE	4/1/69			4-2-69	4/3/69		4/9/69	5/7/69

GAEC EO RELEASE: VC 5/7/69

PRIORITY: C
DRAWING TITLE: SEE DWG
DRAWING NO.: LEO 280
EO NO.: 1444

052869
ISSUED BY MEVORAH / THORJUSEN X86046 SECTION VEH DES INT GROUP NO. 335 PL. 25

01

NAS 9-1100

ENG 32.1 REV 3-65

GRUMMAN AIRCRAFT ENGINEERING CORP.
CODE IDENT NO. 26512

ENGINEERING ORDER

DWG. NO. LEO280

EO NO. 1732

CONTROL INFO NO. LDW280B9166

FOR THE DRAWINGS LISTED BELOW, REMOVE LM-10(40) THRU LM-14(44) EFF. FROM ALL DASH NOS. *

DRAWING NUMBER *	NEXT ASSEMBLY	DWG. TITLE	CHG. LTR
LDW280-51642-5-1	LDW280-58553	SEE DWG	B5
-18140-11,-21,-23,-25,-27 & -29	-51642	↑	B3
-18201-15 & -17 & -19	-51642		B6
-18206-15,-17,-19 & -21	-51642		B6
-51818-1	-58553		B2
-18119-11,-13,-15,-17 & -19	-51818		A6
-28835-9	-58553		C5
-18190-13	-28835		D3
-54643-1	-28835	↓	A2
LDW280-54832-1	LDW280-28835	SEE DWG	A2

* APPLICABLE DASH NO.

DETAIL SPEC REQ		CL II ENGRG CHG		CL I ENGRG CHG	✓ LCD 3890 PKG59 CCA 2205 (5)

REASON FOR EO	DESCRIPTION OF EO	GAEC EO RELEASE
LMMP REDESIGN. 3 TANK EXPANSION	REMOVED LM-10(40) THRU LM-14(44) EFF. FROM - *	VK 10/23/6

MODEL	EFFECTIVITY		
	PROCURING ACTIVITY NO.	GAEC UNIT NO.	SUB CONTR UNIT NO.
LM		LM-10(40)	
		THRU	
		LM-14(44)	

DRAWING CHANGE REQD		DISPOSITION OF PARTS		APPROVED BY							
✓			✓	DATE	—			10-20-6	10/21/6		10/20/6	10/22/6
REVISE DWG	RECORD EO	REWORK	SCRAP		VDI	SUPPORT	RELIAB. GROUP	GROUP LEADER	STRESS GROUP	LIAISON ENGRG	PROJ ENGRG

PRIORITY	DRAWING TITLE	DRAWING NO.	EO NO.
C	SEE ABOVE	LEO 280	1732

CDR 10-24

ISSUED BY D.SHAPIRO/P.THORJUSEN X86046 SECTION VDI GROUP NO. 335 PL 25

01 NAS 9-1100

CANCELLED

BY DCRF No. 323-1257
DATE 11-9-66

REPLACED BY LDW280-28644

LE(001)
MP-14

INITIAL DRAWING RELEASE: E O A, DRAWING NOT MADE 2

Release
JRL 11/18/66

11/12/66

11-16

GRUMMAN AIRCRAFT ENGRG CORP.
BETHPAGE, L. I., N. Y.

SHIELD INSTL ~ DS ~ FWD
INTERSTAGE ~ THERMAL

SIZE A
CODE IDENT. NO. 26512
LDW280-51644 B
SCALE NONE
SHEET

ENG 163A REV. 5-64

01 NAS 9-1100

CANCELLED

BY DCRF No. 323-1257
DATE 11-9-66

REPLACED BY LDW280-28645

LE(001)
MP-14

INITIAL DRAWING RELEASE: EO A, DRAWING NOT MADE

2

11/12/66

Release
11-18-66

11-16

GRUMMAN AIRCRAFT ENGRG CORP. BETHPAGE, L. I., N. Y.			
DOOR INSTL ~ DS ~ QUAD I PLSS BATTERY ACCESS			
SIZE A	CODE IDENT. NO. 26512	LDW280-51645	B
SCALE NONE		SHEET	

ENG 163A REV. 5-64

01

NAS 9-1100

CANCELLED

BY DCRF No. 323-1257
DATE 11-9-66

REPLACED BY LDW280-28646

LE(001)
MP-14

INITIAL DRAWING RELEASE: E.O. A, DRAWING NOT MADE

2

11/12/66

Release
11/18/66

11-16

GRUMMAN AIRCRAFT ENGRG CORP. BETHPAGE, L. I., N. Y.			
SHIELD INSTL ~DS ~RH AFT INTERSTAGE ~THERMAL			
SIZE A	CODE IDENT. NO. 26512	LDW280-51646	B
SCALE NONE		SHEET	

ENG 163A REV. 5-64

01

NAS 9-1100

CANCELLED

BY DCRF No. 323-1257
DATE 11-9-66

REPLACED BY LDW280-28647

Release J Pagliaro 11-18-66

16(001)
MR-14

INITIAL DRAWING RELEASE: E.O. A, DRAWING NOT MADE

2

GRUMMAN AIRCRAFT ENGRG CORP. BETHPAGE, L. I., N. Y.			
SHIELD INSTL ~ D S ~ H_2O FILL & DRAIN ACCESS ~ THERMAL			
SIZE A	CODE IDENT. NO. 26512	LDW280-51647	B
SCALE NONE		SHEET	

RM Carbee 11-16

ENG 163A REV. 5-64

01

NAS 9-1100

ALL SHEETS

CANCELLED

BY DCRF No. 323-1257 'A'

DATE 12-29-66

REPLACED BY LDW280-28649

LE(001)
MP-14
1/5/7

INITIAL DRAWING RELEASE: EO A1 DRAWING NOT MADE 5

Release
1-4-67

12/29/66

1-4-67

GRUMMAN AIRCRAFT ENGRG CORP.
BETHPAGE, L. I., N. Y.

SHIELD INSTL ~ D S ~
L.H. AFT INTERSTAGE ~ THERMAL

SIZE A
CODE IDENT. NO. 26512
LDW280-51649 B

SCALE NONE
SHEET 1 OF 1

ENG 163A REV. 5-64

01

NAS 9-1100

CANCELLED

BY DCRF No. 323-1257
DATE 11-9-66.
REPLACED BY LDW280-28653

LE(001)
MP-14

INITIAL DRAWING RELEASE: EO A, DRAWING NOT MADE.

2

JRY 11/18/66

JAS 11/12/66

RM Carbee (WR) 11-16

GRUMMAN AIRCRAFT ENGRG CORP. BETHPAGE, L. I., N. Y.			
SHIELD INSTL ~ DS ~ LDG GEAR UPLOCK PENETRATION ~ THERMAL			
SIZE A	CODE IDENT. NO. 26512	LDW280-51653	B
SCALE NONE		SHEET	

ENG 163A REV. 5-64

01

NAS 9-1100

LDW280-51656 A

MODEL OR END ITEM	NEXT ASSY	MODULE OR SER NO.	REQD PER MODULE OR END ITEM
PART NO.		GAEC SCH NO.	

MODEL OR END ITEM	NEXT ASSY	MODULE OR SER NO.	REQD PER MODULE OR END ITEM
LM	LDW280-51553	LM-1 (31)	1 EA
PART NO. LDW 280-51656-11&19		GAEC SCH NO. 52	

MODEL OR END ITEM	NEXT ASSY	MODULE OR SER NO.	REQD PER MODULE OR END ITEM
LM	LDW280-51509	LM-1(31)	1
PART NO. LDW280-51656-9		GAEC SCH NO.	

WORK PACKAGE FUNCTION # 110 5

SH REV STATUS: FOR DESCRIPTION OF REV SEE SUBQ SH

SHEET	1.00	1.10	2.00	2.01	3.00	4.00	5.00		
REV	A	A	A	A	A	A	A		
SHEET									
REV									
SHEET									
REV									

LAST SECT LTR USED S

LAST DASH NO. USED -27

GRUMMAN REL INFO A

PRIM NO.	JK(001)		
207	MP-A14	2-22-7	

UNLESS OTHERWISE SPECIFIED DIMENSIONS ARE IN INCHES.
TOLERANCE UNLESS SPECIFIED
FRACTIONS - DECIMALS – ANGLES
±1/32 ±.020 ± 1/2°

ORIG DWG AUTH

DETAIL SPEC REQUIREMENT

CLASS II ENGRG CHANGE

CLASS I ENGRG CHANGE

CONTRACT NO. NAS 9-1100

LINE ITEM

DOCUMENTATION TYPE II

DRAWN BY	A.LITVINOFF 1-6-66	RELIABILITY	
LAYOUT BY	J. LANG		
CHECKED BY GB	1-23-67		
~~GR LEADER~~			
VEH DES INT	2/7/67		
STRUCTURES	W/ 1/27/67	PROJ ENGR	2-17-66
STRUCTURES	1/27	REL GROUP	2-17-67
WEIGHTS			

GRUMMAN AIRCRAFT ENGRG CORP
BETHPAGE, L. I., NEW YORK

STANDOFF INSTALLATION
DESCENT STAGE-FWD THERMAL

SIZE	CODE IDENT NO.		
B	26512	LDW280-51656	A
SCALE	NONE	SHEET 1.00 OF 7	

7.1 12-66

01

NAS 9-1100

REVISIONS

FOR CONTINUATION OF REVISIONS SEE SHEET ______

CHANGE LTR	ITEM NO.	SHEET NO.	ZONE	GRUMMAN INFO ONLY	DET SPEC	CLASS I	CLASS II	ENGRG ORDER	DESCRIPTION	EFFECTIVITY	DISPOSITION OF EXISTING PARTS		CHANGED BY AND DATE	ENGRG APPD	~~GOVT APPD~~
											REWORK	SCRAP			
A	1	1.00 TRHU 5.00						EO A1	EO A1 INITIAL DRAWING RELEASE PARTS MADE PER EO	LM-1 (31)	NOT	REQD	A. LITVINOFF 1-16-66		2-17-67
	2	1.00 TRHU 5.00						EO A2	IN FLD & B/M, REMOVE -1-3-5-7 & ADDED -9-11-13-15 -17-19-21-23-25 & -27. IN FLD REMOVED SECT D-D H-H, M-M, DETAIL F & NOTE #4. ADDED SECT N-N, P-P R-R DETAIL "S", NOTE #5 #6 #7 #8 & #9 REVISED NOTE #1 #2 & #3	LM-1 (31)	✓				
	3	3.00, 1.10						LEO280-374	ON DWG NO. 3 ADDED GENERAL NOTE NO. 10						
	4	2.00 3.00 4.00, 1.10						EO A4	ON-13 REMOVED LDW280P17524-1; 12 PLCS ON-19 LDW280P17964-3 WAS LDW280P17964-7		NOT	REQD			
	5	2.00 4.00	23A					(R)	LDW280P17460-69 WAS LDW280P17460-67 GB						

CHG APPROVED	LTR	~~GROUP LDR~~	VEH DES INT	STRUCTURES	STRUCTURES	WEIGHTS	RELIABILITY
	A		1/27/67	1/27/67			

GRUMMAN AIRCRAFT ENGRG CORP., BETHPAGE, L. I., NEW YORK

SIZE	CODE IDENT NO.		
B	26512	LDW280-51656	A
SCALE NONE			SHEET 1.10

ENG 77.16 3-66

01

NAS 9-1100

-27	-25	-23	-21	-19	-17	-15	-13	-11	-9	PART NO.	I&T	CODE IDENT	NOMENCLATURE OR DESCRIPTION	MATERIAL	GOVT SPEC	COML SPEC	STOCK SIZE	PROCESS SYM	FINISH NO.	ZONE
QTY PER ASSEMBLY																				
				1						LDW280P17964-3	E		COVER	SEE DWG						6B
			16				24			LDW280P17525-3			CAP							19B
			16				24			LDW280P17700-17			STANDOFF							19B 5A
				5				23		LDW280P17575-11			RETAINER							8B
									13	LDW280-23712-3			STANDOFF							8B
									13	LDW280-23712-1			STANDOFF	SEE DWG						24B 16A
								2		GT535L-HA-0250			TAPE-HOOK	GRUMMAN STD						
									40	GT535G-LAS-0004			TAPE-LOOP	GRUMMAN STD						19B 5A
					1					LDW280P17460-69			BLANKET ASSY							23A
						1				-65			BLANKET ASSY							8B
		1								-61			BLANKET ASSY							5B
1										-47			BLANKET ASSY							8B
	1									LDW280P17460-43			BLANKET ASSY							5B
							1			LDW280-51656-27			BLANKET ASSY							16A
			1							-25			BLANKET ASSY							6A
			1							-23			BLANKET ASSY							6A
				1						-21			BLANKET HARDWARE ASSY							6A
										-19			BLANKET ASSY							6A
							1			-17			BLANKET ASSY							16A
							1			-15			BLANKET ASSY							16A
								1		-13			BLANKET HARDWARE ASSY							16A 6A
										-11			BLANKET INSTL							16A
										LDW280-51656-9	E		STANDOFF INSTL							6A

SYM OR NO.	PROCESS SYM OR FINISH NO.	GRUMMAN SPEC OR MILITARY SPEC	SYM OR NO.	PROCESS SYM OR FINISH NO.	GRUMMAN SPEC OR MILITARY SPEC	SYM OR NO.	PROCESS SYM OR FINISH NO.	GRUMMAN SPEC OR MILITARY SPEC

I & T: IDENTIFICATION AND TRACEABILITY IN ACCORDANCE WITH NONE

GRUMMAN AIRCRAFT ENGRG CORP., BETHPAGE, L. I., NEW YORK

SIZE	CODE IDENT NO.		
B	26512	LDW280-51656	A

SCALE NONE　SHEET 2.00

ENG 77.2 5-64

01

NAS 9-1100

-27	-25	-23	-21	-19	-17	-15	-13	-11	-9	PART NO.	I&T	CODE IDENT	NOMENCLATURE OR DESCRIPTION	MATERIAL	GOVT SPEC	COML SPEC	STOCK SIZE	PROCESS SYM	FINISH NO.	ZONE
					AS		RE	QD		GS5775-1	E		STAPLES	GRUMMAN STD						
					AS		RE	QD		GT835M-8			TAPE							
					AS		RE	QD		GT835P-8			TAPE							
					AS		RE	QD		GT15C-1			TAPE							
			5				24			GB10J-1			BUSHING							
			5				24			GW10H-1			WASHER							
				6						GR11B-1			RETAINER							
				6						GW10H-3			RETAINER	GRUMMAN STD						
				5				23		AN515-6R4			SCREW	STD PAPT						
									√	MS20470AD3	E		RIVET	STD PART						

QTY PER ASSEMBLY

SYM OR NO.	PROCESS SYM OR FINISH NO.	GRUMMAN SPEC OR MILITARY SPEC	SYM OR NO.	PROCESS SYM OR FINISH NO.	GRUMMAN SPEC OR MILITARY SPEC	SYM OR NO.	PROCESS SYM OR FINISH NO.	GRUMMAN SPEC OR MILITARY SPEC

I&T: IDENTIFICATION AND TRACEABILITY IN ACCORDANCE WITH NONE

GRUMMAN AIRCRAFT ENGRG CORP., BETHPAGE, L. I., NEW YORK

SIZE	CODE IDENT NO.		
B	26512	LDW280-51656	A
SCALE	NONE		SHEET 2.01

ENG 77.2 5-64

01

NAS 9-1100

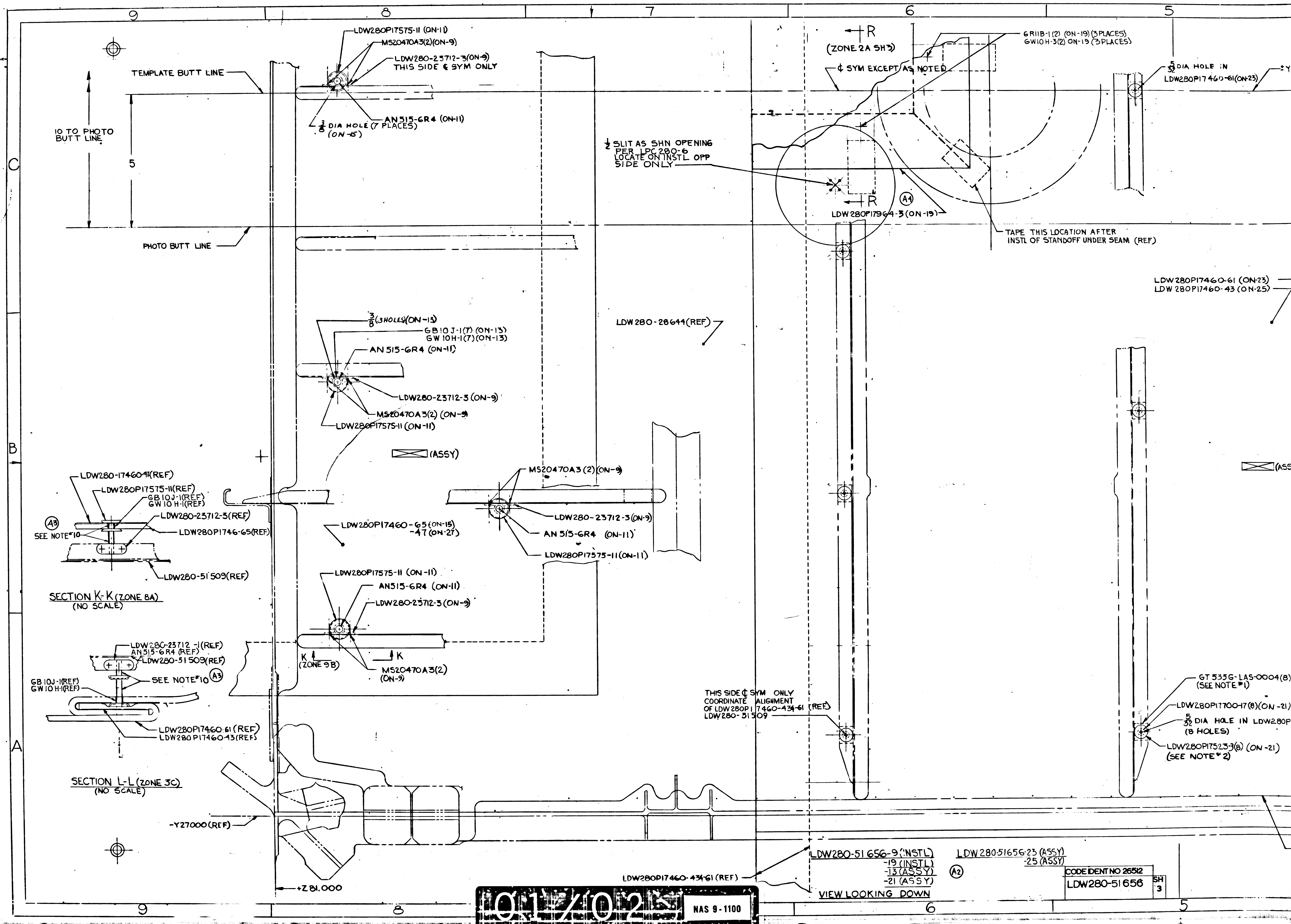
9
8
7
6
5
C
B
A
LDW280P17575-11 (ON-11)
MS20470A3(2)(ON-9)
LDW280-23712-3(ON-9)
THIS SIDE ¢ SYM ONLY
TEMPLATE BUTT LINE
AN515-6R4 (ON-11)
3/8 DIA HOLE (7 PLACES) (ON-15)
10 TO PHOTO BUTT LINE
5
PHOTO BUTT LINE
R
(ZONE 2A SH3)
¢ SYM EXCEPT AS NOTED
6R11B-1(2) (ON-19)(3 PLACES)
GW10H-3(2) ON-19 (3 PLACES)
5/32 DIA HOLE IN LDW280P17460-61(ON-23)
1/2 SLIT AS SHN OPENING PER LPC 280-6 LOCATE ON INSTL OPP SIDE ONLY
R
A4
LDW280P17964-3 (ON-19)
TAPE THIS LOCATION AFTER INSTL OF STANDOFF UNDER SEAM (REF)
LDW280P17460-61 (ON-23)
LDW280P17460-43 (ON-25)
LDW280-28644(REF)
3/8 (3 HOLES)(ON-13)
GB10J-1(7) (ON-13)
GW10H-1(7) (ON-13)
AN515-6R4 (ON-11)
LDW280-23712-3 (ON-9)
MS20470A3(2) (ON-9)
LDW280P17575-11 (ON-11)
(ASSY)
(ASS
MS20470A3 (2) (ON-9)
LDW280-23712-3 (ON-9)
AN515-6R4 (ON-11)
LDW280P17575-11 (ON-11)
LDW280P17460-65 (ON-15)
-47 (ON-27)
LDW280-174609(REF)
LDW280P17575-11(REF)
GB10J-1(REF)
GW10H-1(REF)
LDW280-23712-3(REF)
LDW280P1746-65(REF)
A3
SEE NOTE #10
LDW280-51509(REF)
SECTION K-K (ZONE 8A)
(NO SCALE)
LDW280P17575-11 (ON-11)
AN515-6R4 (ON-11)
LDW280-23712-3 (ON-9)
K
(ZONE 9B)
K
MS20470A3(2) (ON-9)
LDW280-23712-1(REF)
AN515-6R4 (REF)
LDW280-51509(REF)
GB10J-1(REF)
GW10H-1(REF)
SEE NOTE #10
A3
LDW280P17460-61 (REF)
LDW280P17460-43 (REF)
SECTION L-L (ZONE 3C)
(NO SCALE)
-Y27000 (REF)
+Z81.000
THIS SIDE ¢ SYM ONLY COORDINATE ALIGNMENT OF LDW280P17460-434-61 (REF)
LDW280-51509
GT535G-LAS-0004(8)
(SEE NOTE #1)
LDW280P17700-17(8)(ON-21)
5/32 DIA HOLE IN LDW280P
(8 HOLES)
LDW280P17523-3(8) (ON-21)
(SEE NOTE #2)
LDW280P17460-434-61 (REF)
LDW280-51656-9 (INSTL)
-19 (INSTL)
-13 (ASSY)
-21 (ASSY)
A2
VIEW LOOKING DOWN
LDW280-51656-23 (ASSY)
-25 (ASSY)
CODE IDENT NO 26512
LDW280-51656
SH
3
9
8
6
5

01/02

NAS 9-1100

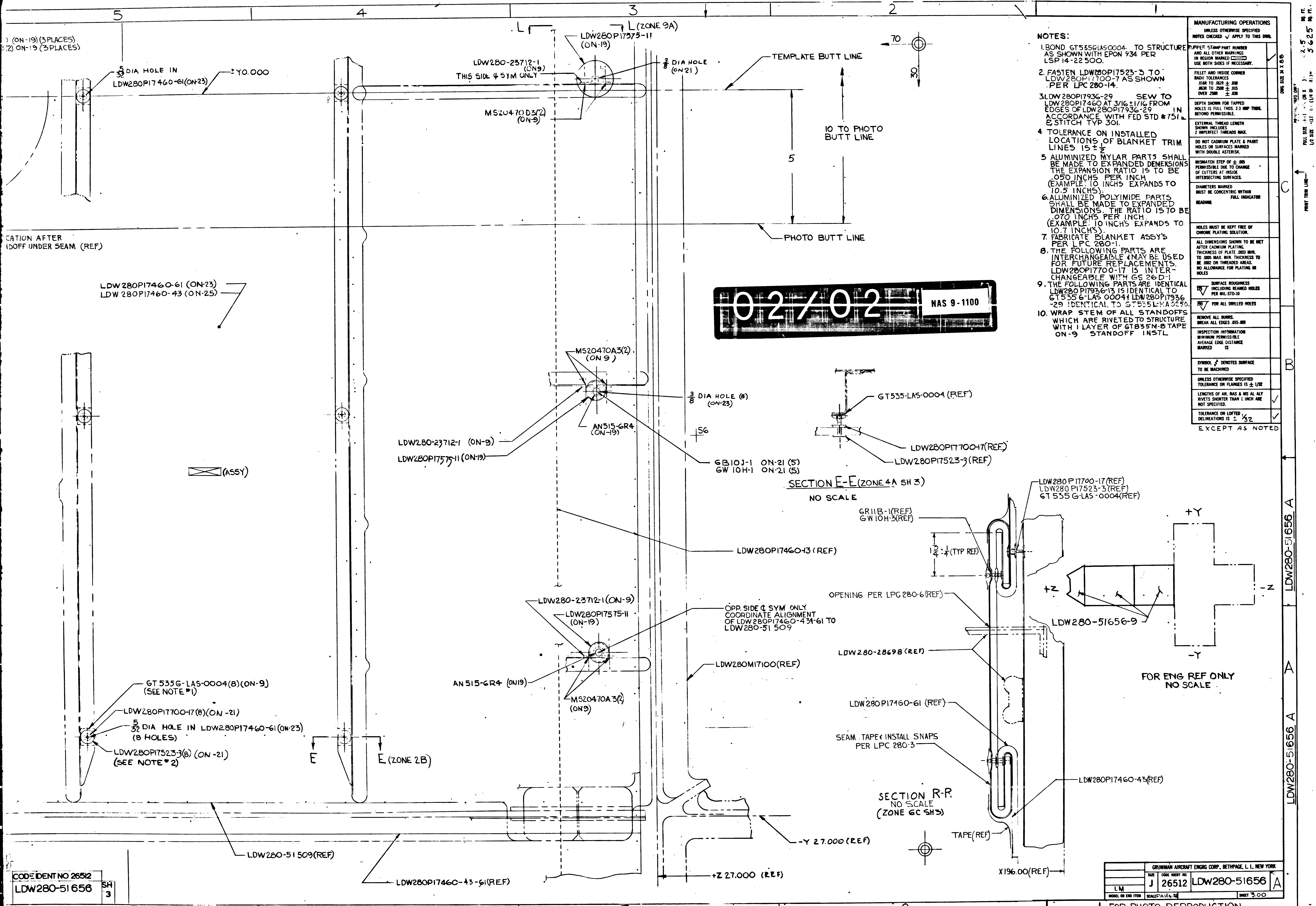
5
4
3
2
1
) (ON-19) (3 PLACES)
(2) ON-19 (3 PLACES)
5/32 DIA HOLE IN LDW280P17460-61 (ON-23)
±Y0.000
L
L (ZONE 9A)
LDW280P17575-11 (ON-19)
LDW280-23712-1 (ON9)
THIS SIDE & SYM ONLY
MS20470D3(2) (ON-9)
3/8 DIA HOLE (ON 21)
TEMPLATE BUTT LINE
70
30
10 TO PHOTO BUTT LINE
5
PHOTO BUTT LINE
CATION AFTER
DOFF UNDER SEAM (REF)
LDW280P17460-61 (ON-23)
LDW280P17460-43 (ON-25)
(ASSY)
MS20470A3(2) (ON 9)
3/8 DIA HOLE (8) (ON-23)
AN515-6R4 (ON-19)
56
LDW280-23712-1 (ON-9)
LDW280P17575-11 (ON-19)
GB10J-1 ON-21 (5)
GW 10H-1 ON-21 (5)
GT535-LAS-0004 (REF)
LDW280P17700-17(REF)
LDW280P17523-3 (REF)
SECTION E-E (ZONE 4A SH 3)
NO SCALE
LDW280P17460-43 (REF)
LDW280-23712-1 (ON-9)
LDW280P17575-11 (ON-19)
OPP. SIDE ℄ SYM ONLY
COORDINATE ALIGNMENT
OF LDW280P17460-43 4-61 TO
LDW280-51509
AN515-6R4 (ON19)
MS20470A3(2) (ON9)
LDW280M17100(REF)
GT535G-LAS-0004 (8) (ON-9)
(SEE NOTE #1)
LDW280P17700-17 (8) (ON-21)
5/32 DIA HOLE IN LDW280P17460-61 (ON-23)
(8 HOLES)
LDW280P17523-3 (8) (ON-21)
(SEE NOTE #2)
E
E (ZONE 2B)
LDW280-51509 (REF)
LDW280P17460-43-61 (REF)
-Y 27.000 (REF)
+Z 27.000 (REF)
LDW280P17700-17 (REF)
LDW280P17523-3 (REF)
GT535G-LAS-0004 (REF)
GR11B-1 (REF)
GW10H-3 (REF)
1 3/4 ± 1/4 (TYP REF)
OPENING PER LPC 280-6 (REF)
LDW280-28698 (REF)
LDW280P17460-61 (REF)
SEAM TAPE & INSTALL SNAPS PER LPC 280-3
LDW280P17460-43 (REF)
SECTION R-R
NO SCALE
(ZONE 6C SH3)
TAPE (REF)
X196.00 (REF)
+Y
-Y
+Z
-Z
LDW280-51656-9
FOR ENG REF ONLY
NO SCALE
C
B
A
LDW280-51656 A
LDW280-51656 A
PRINT TRIM LINE
DWG SIZE 34 X 88
PRINTING INFO ONLY
FULL SIZE SHEET AREA (36 X) = 2.5 SQ. FT.
1/2 SIZE SHEET AREA (1/4 OF) = 5.625 SQ. FT.

02/02 NAS 9-1100

NOTES:

1. BOND GT535GLAS0004 TO STRUCTURE AS SHOWN WITH EPON 934 PER LSP 14-22500.
2. FASTEN LDW280P17523-3 TO LDW280P17700-7 AS SHOWN PER LPC 280-14.
3. LDW280P17936-29 SEW TO LDW280P17460 AT 3/16±1/16 FROM EDGES OF LDW280P17936-29 IN ACCORDANCE WITH FED STD #751a & STITCH TYP 301.
4. TOLERANCE ON INSTALLED LOCATIONS OF BLANKET TRIM LINES IS ± 1/2
5. ALUMINIZED MYLAR PARTS SHALL BE MADE TO EXPANDED DEMENSIONS THE EXPANSION RATIO IS TO BE .050 INCHS PER INCH (EXAMPLE: 10 INCHS EXPANDS TO 10.5 INCHS).
6. ALUMINIZED POLYIMIDE PARTS SHALL BE MADE TO EXPANDED DIMENSIONS. THE RATIO IS TO BE .070 INCH'S PER INCH. (EXAMPLE: 10 INCH'S EXPANDS TO 10.7 INCH'S).
7. FABRICATE BLANKET ASSY'S PER LPC 280-1.
8. THE FOLLOWING PARTS ARE INTERCHANGEABLE & MAY BE USED FOR FUTURE REPLACEMENTS. LDW280P17700-17 IS INTERCHANGEABLE WITH GS 26D-1
9. THE FOLLOWING PARTS ARE IDENTICAL LDW280P17936-13 IS IDENTICAL TO GT5356-LAS 0004 & LDW280P17936-29 IDENTICAL TO GT535L-HA 0250.
10. WRAP STEM OF ALL STANDOFFS WHICH ARE RIVETED TO STRUCTURE WITH 1 LAYER OF GT835M-8 TAPE ON-9 STANDOFF INSTL

MANUFACTURING OPERATIONS UNLESS OTHERWISE SPECIFIED NOTES CHECKED ✓ APPLY TO THIS DWG.	
RUBBER STAMP PART NUMBER AND ALL OTHER MARKINGS IN REGION MARKED ⊠ USE BOTH SIDES IF NECESSARY.	✓
FILLET AND INSIDE CORNER RADII TOLERANCES .016R TO .062R ± .010 .063R TO .250R ± .015 OVER .250R ± .030	
DEPTH SHOWN FOR TAPPED HOLES IS FULL THDS. 2-3 IMP THDS. BEYOND PERMISSIBLE.	
EXTERNAL THREAD LENGTH SHOWN INCLUDES 2 IMPERFECT THREADS MAX.	
DO NOT CADMIUM PLATE & PAINT HOLES OR SURFACES MARKED WITH DOUBLE ASTERISK.	
MISMATCH STEP OF ± .005 PERMISSIBLE DUE TO CHANGE OF CUTTERS AT INSIDE INTERSECTING SURFACES.	
DIAMETERS MARKED MUST BE CONCENTRIC WITHIN FULL INDICATOR READING	
HOLES MUST BE KEPT FREE OF CHROME PLATING SOLUTION.	
ALL DIMENSIONS SHOWN TO BE MET AFTER CADMIUM PLATING. THICKNESS OF PLATE .0003 MIN. TO .0005 MAX. MIN. THICKNESS TO BE .0002 ON THREADED AREAS. NO ALLOWANCE FOR PLATING IN HOLES	
125 √ SURFACE ROUGHNESS INCLUDING REAMED HOLES PER MIL-STD-10	
200 √ FOR ALL DRILLED HOLES	
REMOVE ALL BURRS. BREAK ALL EDGES .015-.031	
INSPECTION INFORMATION MINIMUM PERMISSIBLE AVERAGE EDGE DISTANCE MARKED IS	
SYMBOL ∱ DENOTES SURFACE TO BE MACHINED	
UNLESS OTHERWISE SPECIFIED TOLERANCE ON FLANGES IS ± 1/32	
LENGTHS OF AN, NAS & MS AL ALY RIVETS SHORTER THAN 1 INCH ARE NOT SPECIFIED.	✓
TOLERANCE ON LOFTED DELINEATIONS IS ± 1/32	✓

EXCEPT AS NOTED

CODE IDENT NO 26512
LDW280-51656 SH 3

GRUMMAN AIRCRAFT ENGRG CORP., BETHPAGE, L. I., NEW YORK

SIZE	CODE IDENT NO.		
J	26512	LDW280-51656	A

LM
MODEL OR END ITEM
SCALE FULL LENGTH
SHEET 3.00

FOR PHOTO REPRODUCTION

K2

LDW 280-51656 SH4

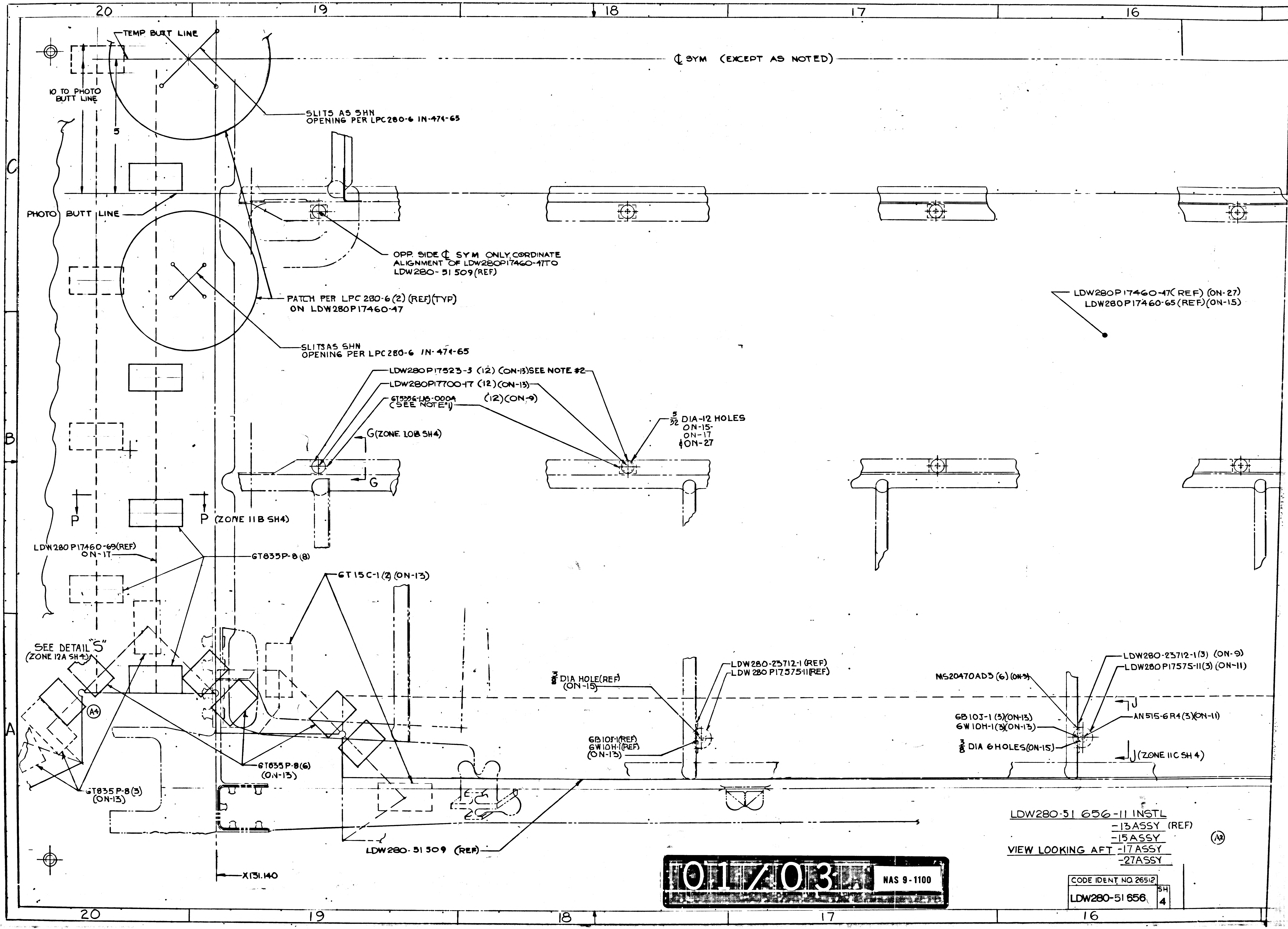
20
19
18
17
16
C
B
A
TEMP BUTT LINE
℄ SYM (EXCEPT AS NOTED)
10 TO PHOTO BUTT LINE
5
SLITS AS SHN
OPENING PER LPC280-6 IN-474-65
PHOTO BUTT LINE
OPP. SIDE ℄ SYM ONLY CORDINATE ALIGNMENT OF LDW280P17460-47 TO LDW280-51509 (REF)
PATCH PER LPC 280-6 (2) (REF)(TYP) ON LDW280P17460-47
SLITS AS SHN
OPENING PER LPC280-6 IN-474-65
LDW280P17460-47 (REF) (ON-27)
LDW280P17460-65 (REF) (ON-15)
LDW280P17523-3 (12) (ON-13) SEE NOTE #2
LDW280P17700-17 (12) (ON-13)
GT5556-LA5-0004 (SEE NOTE #1)
(12) (ON-9)
$\frac{5}{32}$ DIA-12 HOLES ON-15, ON-17 & ON-27
G (ZONE 10B SH4)
G
P
P (ZONE 11B SH4)
LDW280P17460-69 (REF) ON-17
GT835P-8 (8)
GT15C-1 (2) (ON-13)
SEE DETAIL "S" (ZONE 12A SH4)
A4
GT835P-8 (6) (ON-13)
GT835P-8 (3) (ON-13)
LDW280-51509 (REF)
X131.140
$\frac{3}{16}$ DIA HOLE (REF) (ON-15)
LDW280-23712-1 (REF)
LDW280P17575-11 (REF)
6B10J-1 (REF)
6W10H-1 (REF)
(ON-13)
MS20470AD3 (6) (ON-9)
LDW280-23712-1 (3) (ON-9)
LDW280P17575-11 (3) (ON-11)
J
6B10J-1 (3) (ON-13)
6W10H-1 (3) (ON-13)
AN515-6R4 (3) (ON-11)
$\frac{3}{8}$ DIA 6 HOLES (ON-15)
J (ZONE 11C SH4)
A2

LDW280-51 656-11 INSTL
-13ASSY (REF)
-15ASSY
VIEW LOOKING AFT -17ASSY
-27ASSY

01/03

NAS 9-1100

CODE IDENT NO. 26512
LDW280-51656 SH 4

16
15
14
13
12
TEMP BUTT LINE
90
10 TO PHOTO BUTT LINE (SEE NOTE 4)
5 (SEE NOTE 4)
PHOTO BUTT LINE
LDW280P17460
LDW280P17575-11(REF)
GB10J-1(REF)
GW10H-1(REF)
SECTION J-J
NO SCA
LDW280P17460-47(REF) (ON-27)
LDW280P17460-65(REF)(ON-15)
72
2
LDW280P17460-69(REF)
7 LAYERS POLYMIDE FILM(REF)
SECTION
NO
6T835-8(REF)
6T835P-8 (ON-13)(REF) LOCATE APPROX AS SHOWN
A4
6T835P-8(REF)
6T835P-8(REF)
LDW280P
LDW280P175
DETAIL "5"
(ZONE 20A SH4)
NO SCALE
LDW280-23712-1(3) (ON-9)
LDW280P17575-11(3) (ON-11)
AN515-6R4(3)(ON-11)
J
J (ZONE 11C SH 4)
LDW280-23712-1(REF)
LDW280P17575-11(REF)
3/8 DIA HOLE(REF) (ON-15)
GB10J-1(REF)
GW10H-1(REF)
(ON-13)
X196.00 (REF)
Y27.00(REF)
51 656-11 INSTL
-13ASSY (REF)
-15ASSY
KING AFT -17ASSY
-27ASSY
A2

02/03 NAS 9-1100

CODE IDENT NO. 26512	SH
LDW280-51656	4

CODE IDENT NO. 26512	SH
LDW280-51656	4

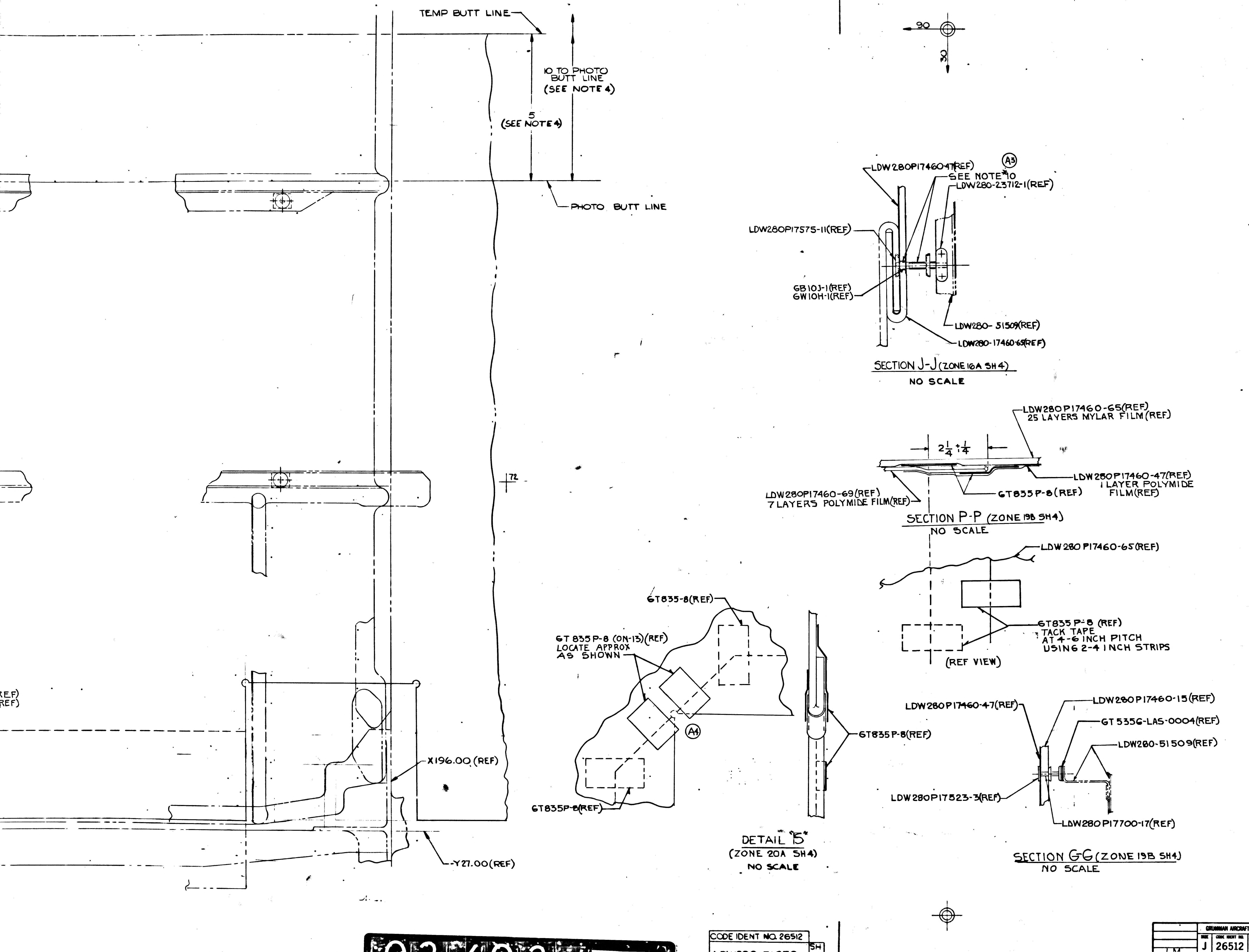
14
13
12
11
10
TEMP BUTT LINE
10 TO PHOTO BUTT LINE (SEE NOTE 4)
5 (SEE NOTE 4)
PHOTO BUTT LINE
90
30
LDW280P17460-47(REF)
Ⓐ3
SEE NOTE *10
LDW280-23712-1(REF)
LDW280P17575-11(REF)
GB10J-1(REF)
GW10H-1(REF)
LDW280-51509(REF)
LDW280-17460-65(REF)
SECTION J-J (ZONE 16A SH4)
NO SCALE
LDW280P17460-65(REF)
25 LAYERS MYLAR FILM(REF)
$2\frac{1}{4}\pm\frac{1}{4}$
LDW280P17460-47(REF)
1 LAYER POLYMIDE FILM(REF)
GT835P-8(REF)
LDW280P17460-69(REF)
7 LAYERS POLYMIDE FILM(REF)
SECTION P-P (ZONE 19B SH4)
NO SCALE
72
LDW280P17460-65(REF)
GT835P-8 (REF)
TACK TAPE
AT 4-6 INCH PITCH
USING 2-4 INCH STRIPS
(REF VIEW)
GT835-8(REF)
GT835P-8 (ON-13)(REF)
LOCATE APPROX
AS SHOWN
Ⓐ4
GT835P-8(REF)
GT835P-8(REF)
DETAIL "E"
(ZONE 20A SH4)
NO SCALE
LDW280P17460-47(REF)
LDW280P17460-15(REF)
GT5356-LAS-0004(REF)
LDW280-51509(REF)
LDW280P17523-3(REF)
LDW280P17700-17(REF)
SECTION GG (ZONE 19B SH4)
NO SCALE
REF)
REF)
X196.00 (REF)
Y27.00(REF)
C
B
A
A
A
LDW280-51656
LDW280-51656
LDW280-51656 SH4

MANUFACTURING OPERATIONS
UNLESS OTHERWISE SPECIFIED
NOTES CHECKED ✓ APPLY TO THIS DWG.

PART NUMBER AND ALL OTHER MARKINGS IN REGION MARKED ⊠ USE BOTH SIDES IF NECESSARY.

FILLET AND INSIDE CORNER RADII TOLERANCES
.015R TO .062R ± .010
.063R TO .250R ± .015
OVER .250R ± .030

DEPTH SHOWN FOR TAPPED HOLES IS FULL THDS. 2-3 IMP THDS. BEYOND PERMISSIBLE.

EXTERNAL THREAD LENGTH SHOWN INCLUDES 2 IMPERFECT THREADS MAX.

DO NOT CADMIUM PLATE & PAINT HOLES OR SURFACES MARKED WITH DOUBLE ASTERISK.

MISMATCH STEP OF ± .005 PERMISSIBLE DUE TO CHANGE OF CUTTERS AT INSIDE INTERSECTING SURFACES.

DIAMETERS MARKED MUST BE CONCENTRIC WITHIN FULL INDICATOR READING

HOLES MUST BE KEPT FREE OF CHROME PLATING SOLUTION.

ALL DIMENSIONS SHOWN TO BE MET AFTER CADMIUM PLATING. THICKNESS OF PLATE .0003 MIN. TO .0005 MAX. MIN. THICKNESS TO BE .0002 ON THREADED AREAS. NO ALLOWANCE FOR PLATING IN HOLES

125 SURFACE ROUGHNESS INCLUDING REAMED HOLES PER MIL-STD-10

200 FOR ALL DRILLED HOLES

REMOVE ALL BURRS. BREAK ALL EDGES .015-.031

INSPECTION INFORMATION MINIMUM PERMISSIBLE AVERAGE EDGE DISTANCE MARKED IS

SYMBOL √ DENOTES SURFACE TO BE MACHINED

UNLESS OTHERWISE SPECIFIED TOLERANCE ON FLANGES IS ± 1/32

LENGTHS OF AN, NAS & MS AL ALY RIVETS SHORTER THAN 1 INCH ARE NOT SPECIFIED.

TOLERANCE ON LOFTED DELINEATIONS IS

DWG SIZE 34 X 106

PRINTING INFO ONLY
FULL SIZE SHEET AREA (36 X 108) = 27 SQ. FT.
1/2 SIZE SHEET AREA (1/4 OF FULL) = 6.750 SQ. FT.

PRINT TRIM LINE

	GRUMMAN AIRCRAFT ENGRG CORP., BETHPAGE, L. I., NEW YORK			
LM	SIZE J	CODE IDENT NO. 26512	LDW280-51656	A
MODEL OR END ITEM	SCALE FULL & NOTED		SHEET 4.00	

FOR PHOTO REPRODUCTION

CODE IDENT NO. 26512
LDW280-51656 SH 4

03/03 NAS 9-1100

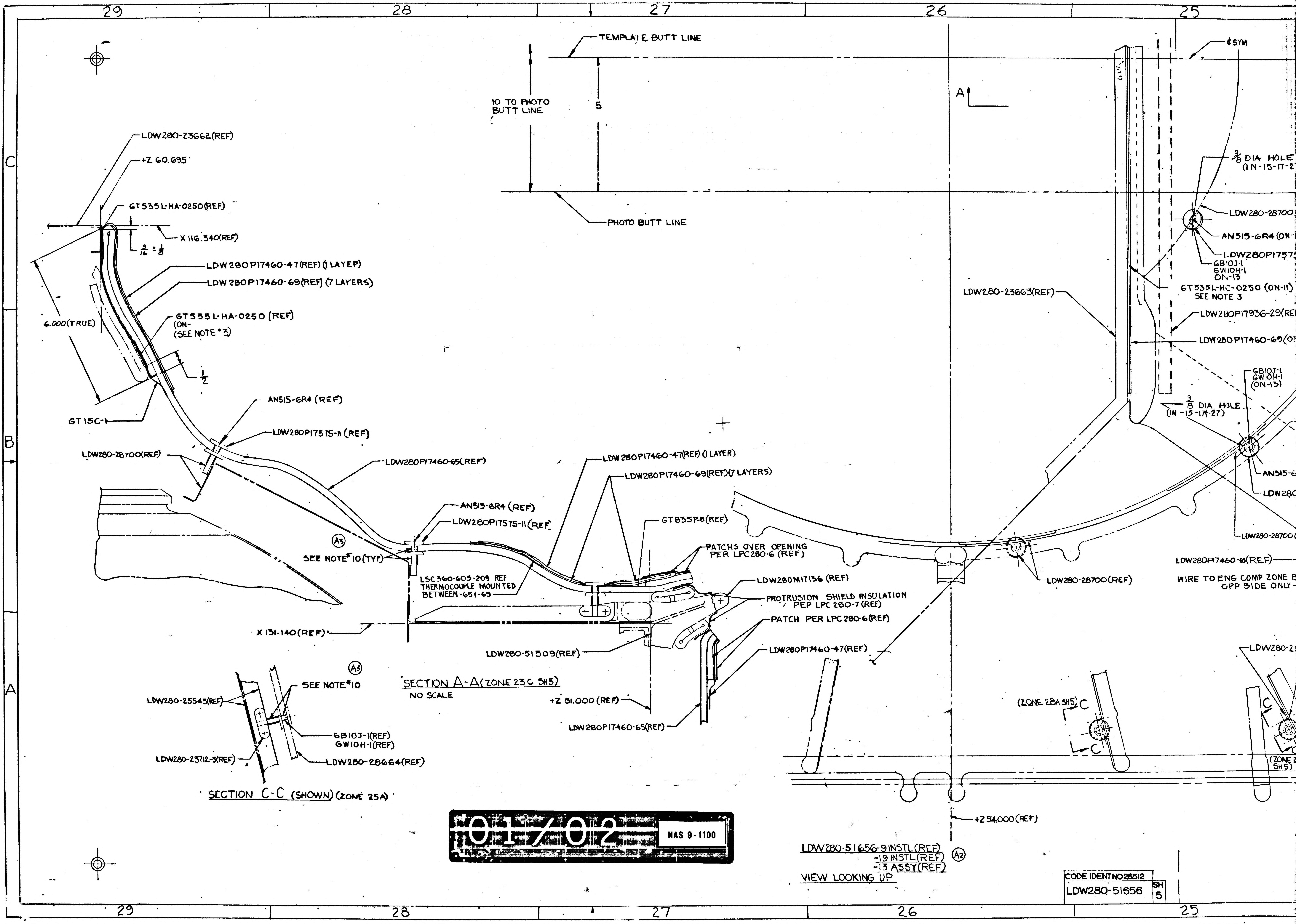
29
28
27
26
25
C
B
A
TEMPLATE BUTT LINE
10 TO PHOTO BUTT LINE
5
PHOTO BUTT LINE
A
¢SYM
LDW280-23662(REF)
+Z 60.695
GT535L-HA-0250(REF)
X 116.340(REF)
3/16 ± 1/8
LDW280P17460-47(REF) (1 LAYER)
LDW280P17460-69(REF) (7 LAYERS)
6.000(TRUE)
GT535L-HA-0250 (REF) (ON- (SEE NOTE *3)
1/2
GT15C-1
AN515-6R4 (REF)
LDW280P17575-11 (REF)
LDW280-28700(REF)
LDW280P17460-65(REF)
AN515-6R4 (REF)
LDW280P17575-11(REF)
A3
SEE NOTE* 10(TYP)
LSC 360-605-209 REF THERMOCOUPLE MOUNTED BETWEEN -65 & -69
LDW280P17460-47(REF) (1 LAYER)
LDW280P17460-69(REF)(7 LAYERS)
GT835P-8(REF)
PATCHS OVER OPENING PER LPC280-6 (REF)
LDW280M17136 (REF)
PROTRUSION SHIELD INSULATION PER LPC 280-7 (REF)
PATCH PER LPC 280-6(REF)
LDW280P17460-47(REF)
X 131.140 (REF)
LDW280-51509(REF)
+Z 81.000 (REF)
LDW280P17460-65(REF)
3/8 DIA HOLE (IN-15-17-2
LDW280-28700
AN515-6R4 (ON-
LDW280P1757
GB10J-1 GW10H-1 ON-13
GT535L-HC-0250 (ON-11) SEE NOTE 3
LDW280-23663(REF)
LDW280P17936-29(RE
LDW280P17460-69(O
GB10J-1 GW10H-1 (ON-13)
3/8 DIA HOLE (IN -15-17-27)
AN515-6
LDW280
LDW280-28700
LDW280-28700(REF)
LDW280P17460-65(REF)
WIRE TO ENG COMP ZONE B OPP SIDE ONLY
LDW280-2
(ZONE 28A SH5)
C
C
(ZONE 2 SH5)
+Z 54.000 (REF)
A3
SEE NOTE* 10
LDW280-25543(REF)
GB10J-1(REF) GW10H-1(REF)
LDW280-23712-3(REF)
LDW280-28664(REF)
A2

SECTION A-A (ZONE 23C SH5)
NO SCALE

SECTION C-C (SHOWN) (ZONE 25A)

01/02 NAS 9-1100

LDW280-51656-9 INSTL (REF)
-19 INSTL (REF)
-13 ASSY (REF)
VIEW LOOKING UP

CODE IDENT NO 28512
LDW280-51656 SH 5

LDW280-51656 SH5

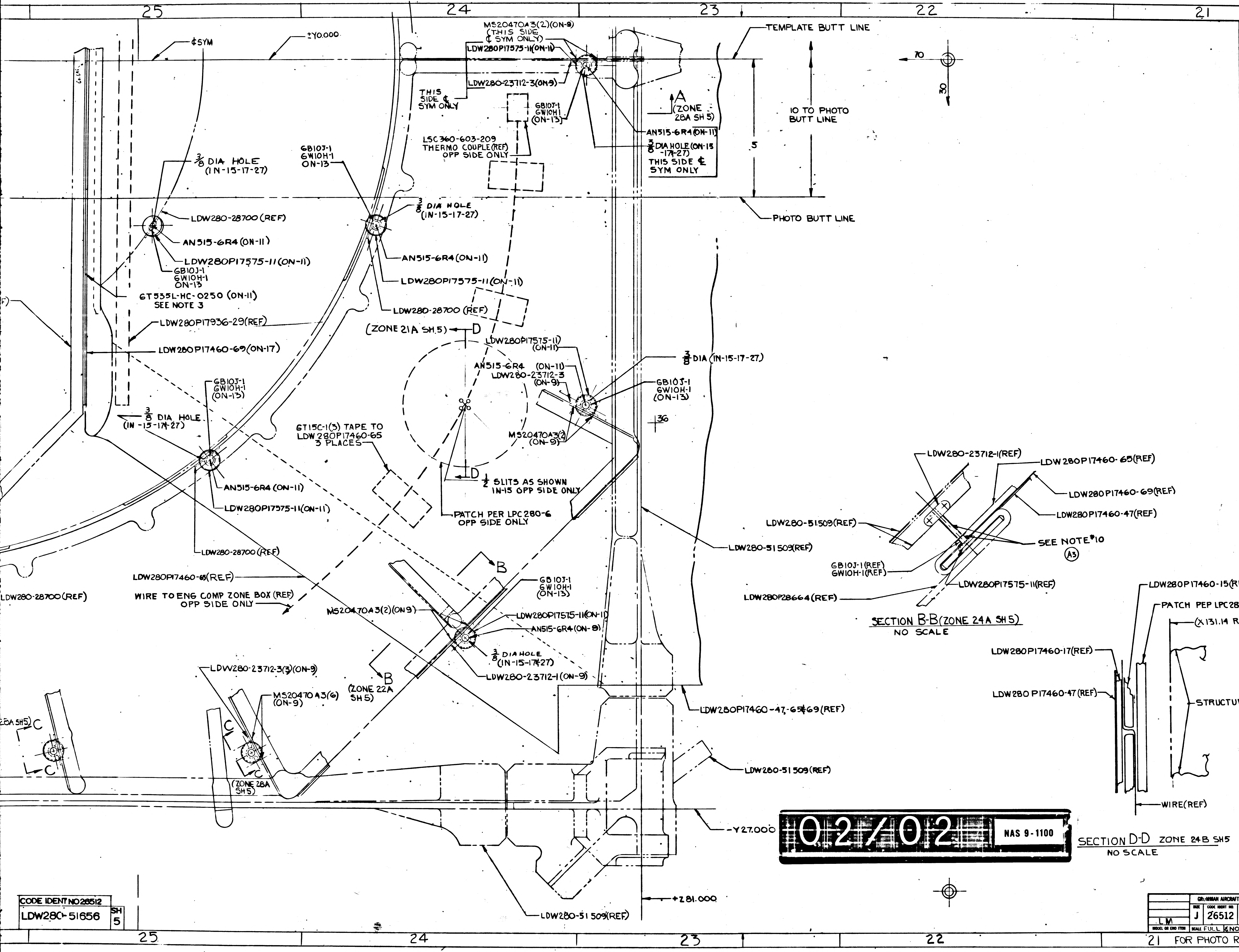
25
24
23
22
21
¢SYM
±Y0.000
MS20470A3(2)(ON-9)
(THIS SIDE
¢ SYM ONLY)
LDW280P17575-11(ON-11)
LDW280-23712-3(ON9)
THIS SIDE ¢ SYM ONLY
GB10J-1
GW10H-1
(ON-13)
LSC360-603-209
THERMO COUPLE(REF)
OPP SIDE ONLY
A
(ZONE 28A SH 5)
AN515-6R4(ON-11)
3/8 DIA HOLE (ON-15-17-27)
THIS SIDE ¢ SYM ONLY
TEMPLATE BUTT LINE
10 TO PHOTO BUTT LINE
5
PHOTO BUTT LINE
70
30
3/8 DIA HOLE (IN-15-17-27)
LDW280-28700 (REF)
AN515-6R4 (ON-11)
LDW280P17575-11 (ON-11)
GB10J-1
GW10H-1
ON-13
GB10J-1
GW10H-1
ON-13
3/8 DIA HOLE (IN-15-17-27)
AN515-6R4 (ON-11)
LDW280P17575-11(ON-11)
LDW280-28700 (REF)
6T535L-HC-0250 (ON-11)
SEE NOTE 3
LDW280P17936-29(REF)
LDW280P17460-69(ON-17)
(ZONE 21A SH.5)
D
LDW280P17575-11 (ON-11)
AN515-6R4 (ON-11)
LDW280-23712-3 (ON-9)
3/8 DIA (IN-15-17-27)
GB10J-1
GW10H-1
(ON-13)
MS20470A3(2) (ON-9)
36
GB10J-1
GW10H-1
(ON-13)
3/8 DIA HOLE (IN-15-17-27)
6T15C-1(3) TAPE TO LDW280P17460-65 3 PLACES
AN515-6R4 (ON-11)
LDW280P17575-11(ON-11)
1/2 SLITS AS SHOWN IN-15 OPP SIDE ONLY
PATCH PER LPC280-6 OPP SIDE ONLY
LDW280-28700(REF)
LDW280P17460-65(REF)
LDW280-28700(REF)
WIRE TO ENG COMP ZONE BOX (REF) OPP SIDE ONLY
B
GB10J-1
GW10H-1
(ON-13)
MS20470A3(2)(ON9)
LDW280P17575-11(ON-11)
AN515-6R4(ON-8)
3/8 DIA HOLE (IN-15-17-27)
LDW280-23712-1(ON-9)
LDW280-51509(REF)
LDW280-23712-3(3)(ON-9)
MS20470A3(6) (ON-9)
(ZONE 22A SH5)
(ZONE 28A SH5)
C
LDW280P17460-47,-65 & 69 (REF)
LDW280-51509(REF)
Y27.000
+Z81.000
LDW280-51509(REF)
LDW280-23712-1(REF)
LDW280P17460-65(REF)
LDW280P17460-69(REF)
LDW280P17460-47(REF)
LDW280-51509(REF)
SEE NOTE*10
A3
GB10J-1(REF)
GW10H-1(REF)
LDW280P17575-11(REF)
LDW280P28664(REF)
SECTION B-B (ZONE 24A SH5)
NO SCALE
LDW280P17460-15(REF)
PATCH PEP LPC280-6(REF)
(X131.14 REF)
LDW280P17460-17(REF)
LDW280 P17460-47(REF)
STRUCTURE(REF)
WIRE(REF)
SECTION D-D ZONE 24B SH5
NO SCALE
02/02
NAS 9-1100
C
B
A
LDW280-51656 A

MANUFACTURING OPERATIONS
UNLESS OTHERWISE SPECIFIED NOTES CHECKED ✓ APPLY TO THIS DWG.

PART NUMBER AND ALL OTHER MARKINGS IN REGION MARKED ▭ USE BOTH SIDES IF NECESSARY.

FILLET AND INSIDE CORNER RADII TOLERANCES
.016R TO .062R ± .010
.063R TO .250R ± .015
OVER .250R ± .030

DEPTH SHOWN FOR TAPPED HOLES IS FULL THDS. 2-3 IMP THDS. BEYOND PERMISSIBLE.

EXTERNAL THREAD LENGTH SHOWN INCLUDES 2 IMPERFECT THREADS MAX.

DO NOT CADMIUM PLATE & PAINT HOLES OR SURFACES MARKED WITH DOUBLE ASTERISK.

MISMATCH STEP OF ± .005 PERMISSIBLE DUE TO CHANGE OF CUTTERS AT INSIDE INTERSECTING SURFACES.

DIAMETERS MARKED MUST BE CONCENTRIC WITHIN FULL INDICATOR READING

HOLES MUST BE KEPT FREE OF CHROME PLATING SOLUTION.

ALL DIMENSIONS SHOWN TO BE MET AFTER CADMIUM PLATING. THICKNESS OF PLATE .0003 MIN. TO .0005 MAX. MIN. THICKNESS TO BE .0002 ON THREADED AREAS. NO ALLOWANCE FOR PLATING IN HOLES

125 √ SURFACE ROUGHNESS INCLUDING REAMED HOLES PER MIL-STD-10

200 √ FOR ALL DRILLED HOLES

REMOVE ALL BURRS. BREAK ALL EDGES .015-.030

INSPECTION INFORMATION MINIMUM PERMISSIBLE AVERAGE EDGE DISTANCE MARKED IS

SYMBOL f DENOTES SURFACE TO BE MACHINED

UNLESS OTHERWISE SPECIFIED TOLERANCE ON FLANGES IS ± 1/32

LENGTHS OF AN, NAS & MS AL ALY RIVETS SHORTER THAN 1 INCH ARE NOT SPECIFIED.

TOLERANCE ON LOFTED DELINEATIONS IS

DWG SIZE 34 X 88

PRINTING INFO ONLY

PRINT TRIM LINE

CODE IDENT NO 26512
LDW280-51656 SH 5

GRUMMAN AIRCRAFT ENGRG CORP., BETHPAGE, L.I., NEW YORK

SIZE	CODE IDENT NO.		
J	26512	LDW280-51656	A
SCALE FULL & NOTED		SHEET 5.00	

LM

FOR PHOTO REPRODUCTION

K2

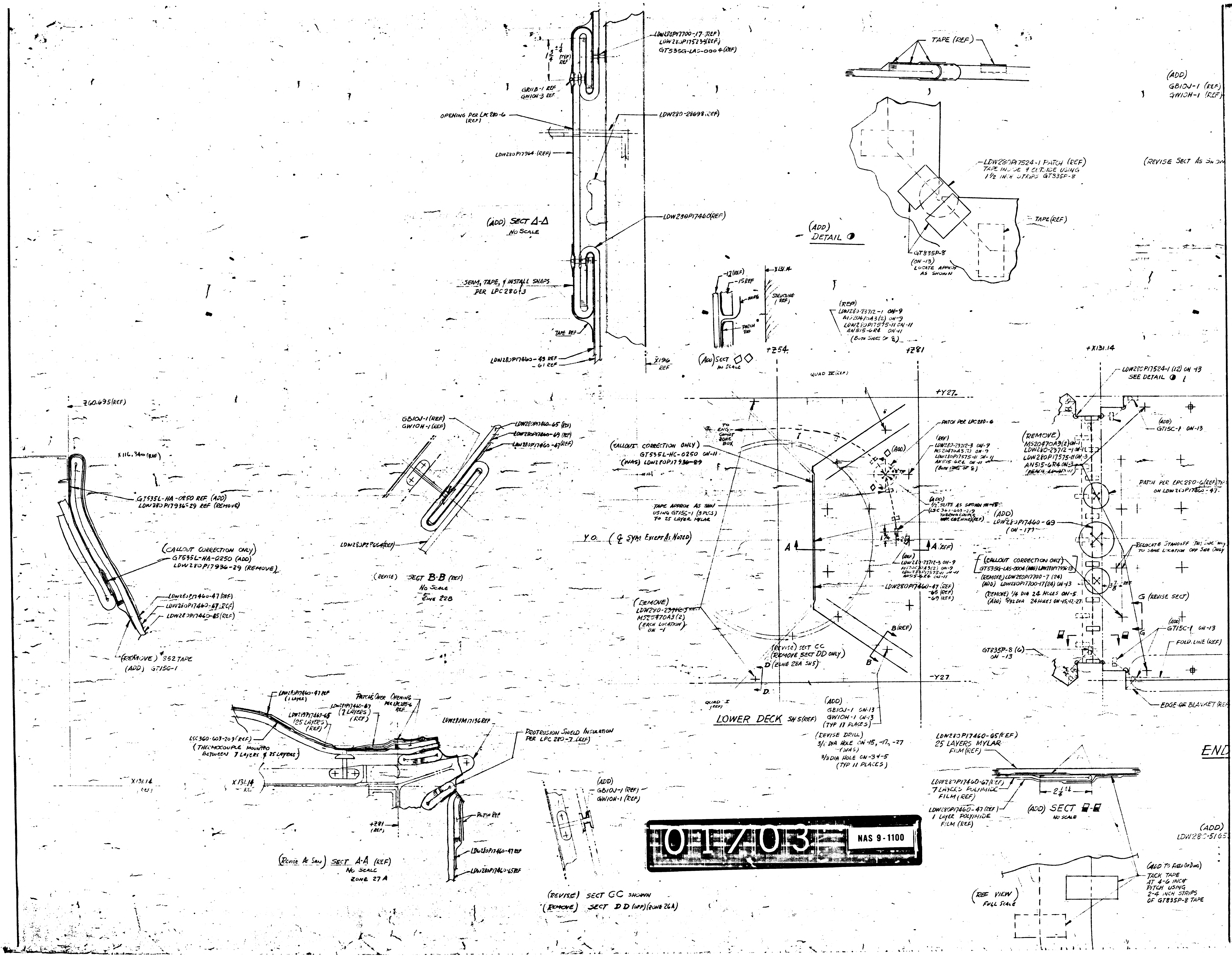
LDW280P17700-17 (REF)
LDW280P17523(REF)
GT535G-LAS-0004(REF)
$1\frac{3}{4} \pm \frac{1}{4}$ (TYP) REF
GR11B-1 REF
GW10H-3 REF
OPENING PER LPC 280-6 (REF)
LDW280-28698(REF)
LDW280P17964 (REF)
LDW280P17460(REF)
(ADD) SECT Δ-Δ
NO SCALE
SEAM, TAPE, & INSTALL SNAPS PER LPC 280-3
TAPE REF
LDW280P17460-43 REF
-61 REF
X196 REF
-17(REF)
-15 REF
WIRE
STRUCTURE (REF)
PATCH REF
(ADD) SECT ◇◇
NO SCALE
TAPE (REF)
(ADD)
GB10J-1 (REF)
GW10H-1 (REF)
LDW280P17524-1 PATCH (REF)
TAPE INSIDE & OUTSIDE USING
1½ INCH STRIPS GT835P-8
TAPE(REF)
(REVISE SECT AS SHOWN
(ADD)
DETAIL ◑
GT835P-8
(ON -13)
LOCATE APPROX AS SHOWN
X131.14
(REF)
LDW280-23712-1 ON-9
MS20470A3(2) ON-9
LDW280P17575-11 ON-11
AN515-6R4 ON-11
(BOTH SIDES OF ℄)
+Z54
+Z81
+X131.14
QUAD IV (REF)
+Y27
LDW280P17524-1 (12) ON -13
SEE DETAIL ◑
(ADD)
GT15C-1 ON-13
Z60.695(REF)
X116.340 (REF)
GT535L-HA-0250 REF (ADD)
LDW280P17936-29 REF (REMOVE)
(CALLOUT CORRECTION ONLY)
GT535L-HA-0250 (ADD)
LDW280P17936-29 (REMOVE)
LDW280P17460-47 (REF)
LDW280P17460-67 (REF)
LDW280P17460-85 (REF)
(REMOVE) #852 TAPE
(ADD) GT15G-1
GB10J-1 (REF)
GW10H-1 (REF)
LDW280P17460-65 (REF)
LDW280P17460-69 (REF)
LDW280P17460-47(REF)
LDW280P27664(REF)
(REVISE) SECT B-B (REF)
NO SCALE
ZONE 22B
TO ENG. COMPT ZONE BOX
(CALLOUT CORRECTION ONLY)
GT535L-HC-0250 ON-11
(WAS) ~~LDW280P17936-29~~
PATCH PER LPC 280-6
(REF)
LDW280-23712-3 ON-9
MS20470A3(2) ON-9
LDW280P17575-11 ON-11
AN515-6R4 ON-11
(BOTH SIDES OF ℄)
(ADD)
TAPE APPROX AS SHOWN
USING GT15C-1 (3 PLCS)
TO 25 LAYER MYLAR
(ADD)
½" SLITS AS SHOWN IN -15
(LSC 360-603-209 THERMOCOUPLE WIRE ENE HOLE)(REF)
Y O. (℄ SYM EXCEPT AS NOTED)
A
A (REF)
$1\frac{3}{4}$
$2\frac{5}{8}$
(REF)
LDW280-23712-3 ON-9
MS20470A3(2) ON-9
LDW280P17575-11 ON-11
AN515-6R4 ON-11
LDW280P17460-47 (REF)
-65 (REF)
-69 (REF)
(REMOVE)
LDW280-~~23712-3~~
MS20470A3(2)
(EACH LOCATION ON -1
B(REF)
B
(REVISE) SECT CC
(REMOVE SECT DD ONLY)
D (ZONE 28A SH5)
D
-Y27
QUAD I (REF)
LOWER DECK SH 5(REF)
(ADD)
GB10J-1 ON-13
GW10H-1 ON-13
(TYP 17 PLACES)
(REVISE DRILL)
3/16 DIA HOLE ON -15, -17, -27
(WAS)
3/8 DIA HOLE ON -3 & -5
(TYP 11 PLACES)
(REMOVE)
MS20470A3(2) ON-1
LDW280-23712-1 ON-1
LDW280P17575-11 ON-3
AN515-6R4 ON-3
(EACH LOCATION)
PATCH PER LPC 280-6(REF) TYP
ON LDW280P17460-47.
(ADD)
LDW280P17460-69
(ON -17)
RELOCATE STANDOFF THIS SIDE ONLY
TO SAME LOCATION OPP SIDE ONLY
(CALLOUT CORRECTION ONLY)
GT535G-LAS-0004 (WAS) LDW280P17936-13
(REMOVE) LDW280P17700-7 (24)
(ADD) LDW280P17700-17 (24) ON -13
(REMOVE) 1/4 DIA 24 HOLES ON-5
(ADD) 5/32 DIA 24 HOLES ON -15, -17, -27
$3\frac{7}{8}$ REF
G (REVISE SECT)
G
(ADD)
GT15C-1 ON-13
FOLD LINE (REF)
GT835P-8 (6)
ON -13
EDGE OF BLANKET (REF
END
LDW280P17460-47 REF
(1 LAYER)
PATCHES OVER OPENING PER LPC 280-6 REF
LDW280P17460-67
(7 LAYERS)
(REF)
LDW280P17460-65
(25 LAYERS)
(REF)
LSC360-603-209 (REF)
(THERMOCOUPLE MOUNTED BETWEEN 7 LAYERS & 25 LAYERS)
LDW280M17136 REF
PROTRUSION SHIELD INSULATION PER LPC 280-7 (REF)
X131.14 (REF)
X131.14 REF
+Z81 (REF)
PATCH REF
LDW280P17460-47 REF
LDW280P17460-65 REF
(REVISE AS SHOWN) SECT A-A (REF)
NO SCALE
ZONE 27A
(ADD)
GB10J-1 (REF)
GW10H-1 (REF)
(REVISE) SECT CC SHOWN
(REMOVE) SECT DD (OPP)(ZONE 26A)
LDW280P17460-65 (REF)
25 LAYERS MYLAR FILM (REF)
LDW280P17460-67 (REF)
7 LAYERS POLYIMIDE FILM (REF)
LDW280P17460-47 (REF)
1 LAYER POLYIMIDE FILM (REF)
$2\frac{1}{4} \pm \frac{1}{4}$
(ADD) SECT ▮-▮
NO SCALE
(ADD)
LDW28C-5165
(ADD TO FIELD OF DWG)
TACK TAPE
AT 4-6 INCH
PITCH USING
2-4 INCH STRIPS
OF GT835P-8 TAPE
(REF VIEW
FULL SCALE

01703

NAS 9-1100

LDW280P17460-47 (REF)
LDW280P17460-65 (REF)
(ADD)
GB10J-1 (REF)
GW10H-1 (REF)
-1 PATCH (REF)
GT835P-8
(REVISE SECT AS SHOWN)
SECT J-J (ZONE 16A SH 4) REF
NO SCALE
TAPE (REF)
(REMOVE)
REMOVE { SECT H-H (ZONE 11A)
NO SCALE
ZONE 12B (REF)
H (REMOVE)
(REMOVE)
LDW280P17936-51 (ON-5)
H
(REMOVE) { DETAIL F (ZONE 12A)
(RH SIDE ONLY)
NO SCALE
ZONE 12A (REF)
(ADD)
GB10J-1 (REF)
GW10H-1 (REF)
(REMOVE) LDW280P17460-17
(ADD) LDW280P17460-61
" -43
(REF)
ENG COMPT (REF)
(REVISE SECT AS SHOWN)
SECT L-L (ZONE 3C) (REF)
1.0 SCALE
ZONE 9A (REF)
+X131.14
+X196
LDW280P17524-1 (12) ON -13
SEE DETAIL
LDW280P17460-47 ON -27 (ADD)
P17460-65 ON -15 (ADD)
P17460-15 ON -5 (REMOVE)
(ADD) SECT
ZONE 13B
(NO SCALE)
(ADD)
GT15C-1 ON-13
470A3(2) ON-1
280-23712-1 ON-1
280P17575-11 ON-3
515-6R4 ON-3
PATCH PER LPC280-6 (REF) TYP
ON LDW280P17460-47
-69
RELOCATE STANDOFF (THIS SIDE ONLY)
TO SAME LOCATION OPP SIDE ONLY
ON ONLY)
LDW280P17936-13
-7 (24)
17 (24) ON-13
HOLES ON-5
HOLES ON-15, -17, -27
$3\frac{7}{8}$ REF
G (REVISE SECT)
G
(ADD)
GT15C-1 ON-13
FOLD LINE (REF)
J REVISE SECT)
J
EDGE OF BLANKET (REF)
(ADD)
GB10J-1 (6) ON-13
GW10H-1 (6) ON-13
3/8 DIA 6 HOLES ON-15 (WAS) 1/4 DIA
(REMOVE)
SEE DETAIL F (FOR RH SIDE ONLY)
ZONE 11A
(REMOVE)
MS20470A3(2) ON-1
LDW280-23712-1 ON-1
LDW280P17575-11 ON-3
AN515-6R4 ON-3
(EACH LOCATION)
END PANEL - SH 4 (REF)
(ADD)
GB10J-1 (ON-13)
GW10H-1 (ON-13)
(7 PLACES)
(REVISE DRILL CALLOUT)
3/8 DIA HOLE ON-15 (WAS) ON-5
(7 PLACES)
+Z81
+Z27
+Y27.000
(ADD)
LDW280-28644 (REF)
(REMOVE) LDW280P17460-17 (ON-7)
(ADD) " " -61 (ON-23)
(ADD) " " -43 (ON-25)
LDW280P17460-65 (REF)
-47 (REF)
(ADD)
1/2" SLITS AS SHN
OPENING PER LPC280-6
LOCATE ON INSTL
45° TYP
△ (ADD)
TAPE THIS LOCATION AFTER INSTL OF STANDOFF UNDER SEAM (REF)
(ADD) LDW280P17964-7 (ON-19)
(REMOVE) LDW280P17964-1 (ON-3)
(REVISE SECT)
L
L
Y0. ℄ SYM (EXCEPT AS NOTED)
$2\frac{1}{2}$
M
M (REMOVE)
(ADD)
GR118-1 & GW10H-3 (2 EA REQD) ON-19
(3 PLACES APPROX AS SHN)
LDW280-23712-1 (ON-9)
LDW280P17575-11 (ON-13) } REF
AN516-6R4 (ON-19)
(ADD)
GB10J-1 (ON-21)
GW10H-1 (ON-21)
(REVISE) 3/8 DIA HOLE ON -23 & -25
(WAS) ON -7
(TYPICAL 5 PLACES)
K
K (REVISE SECT)
E
E (REF)
-Y27.000
UPPER DECK - SH 3 (REF)
(REVISE DRILL) 5/32 DIA HOLE (ON-23) WAS 1/4
(REMOVE) LDW280P17700-7 STANDOFF
(ADD) LDW280P17700-17 STANDOFF ON-21
(CALLOUT CORRECTION) GT535G-LAS-0004 WAS
LDW280P17936-13
(TYPICAL 16 PLACES)
(ADD)
LDW280P17460-47 REF
LDW280P17460-65 REF
(ADD)
GB10J-1 REF
GW10H-1 REF
(REVISE) SECT KK (ZONE 8A) REF
NO SCALE
$2\frac{1}{4}\pm\frac{1}{4}$
SECT ▪-▪
NO SCALE
(ADD TO FIELD OF DWG)
TACK TAPE
AT 4-6 INCH
PITCH USING
2-4 INCH STRIPS
OF GT835P-8 TAPE
LDW280P17523-3 (REF)
LDW280P17700-17 (REF)
GT535G-LAS-0004 (REF)
LDW280P17460-65 REF
LDW280P17460-47 REF
SECT GG (REF)
ZONE 19B
X196
GT535G-LAS-0004 (REF)
LDW280P17700-17 (REF) (ADD)
-7 (REMOVE)
LDW280P17523-3 (REF)
(REVISE) SECT E-E (REF)
ZONE 2B
2. REV
DETAIL SPEC RE
ADDIT
MODEL
LM
ISSUED BY

(ADD)		(REMOVE)
LDW280-51656-11	REPLACES	LDW280-51656-3
-13	REPLACES	-5
-15	(NEW ASSY)	
-17	(NEW ASSY)	
-27	(NEW ASSY)	

NOTE: -11 -13 IDENT TO -3, -5, RESP. (EXCEPT AS NOTED)

(ADD)		(REMOVE)
LDW280-51656-9	REPLACES	LDW280-51656-1
" -19	REPLACES	" -3
" -21	REPLACES	" -7
" -23	(NEW ASSY)	
" -25	(NEW ASSY)	

NOTE: -9, -19 -21 IDENT TO -1, -3 -7 RESP (EXCEPT AS NOTED)

02/03

NAS 9-1100

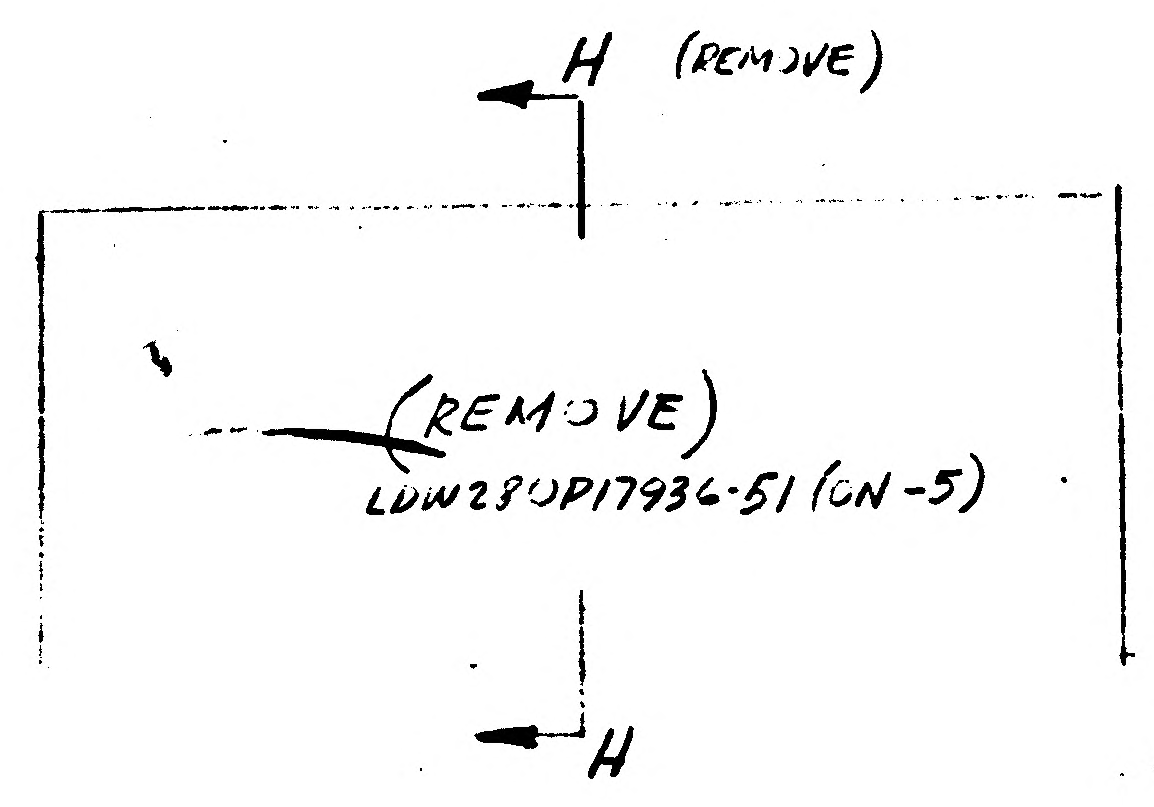
H (REMOVE)
(REMOVE)
LDW280P17936-51 (ON-5)
H

(REMOVE) { DETAIL F (ZONE 12A)
(RH SIDE ONLY)
NO SCALE

ZONE 12A (REF)

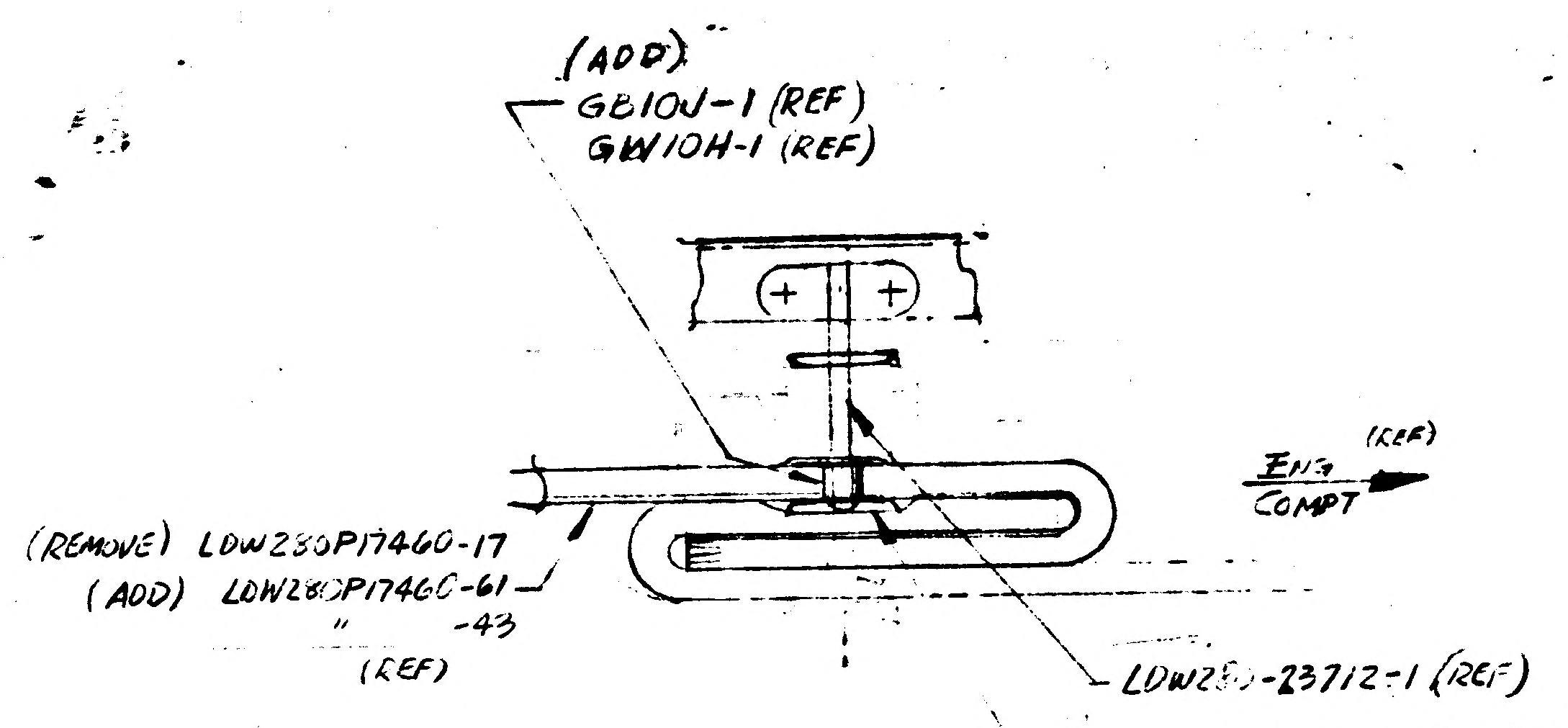
(ADD)
GB10J-1 (REF)
GW10H-1 (REF)
ENG COMPT (REF)
(REMOVE) LDW280P17460-17
(ADD) LDW280P17460-61
" -43
(REF)
LDW280-23712-1 (REF)
LDW280P17575-11 (REF)
AN515-6R4 (REF)

(REVISE SECT AS SHOWN)

SECT L-L (ZONE 3C) (REF)
NO SCALE

ZONE 9A (REF)

(ADD)
GB10J-1 (ON-13)
GW10H-1 (ON-13)
(7 PLACES)
(REVISE DRILL CALLOUT)
3/8 DIA HOLE ON-15 (WAS) ON-5
(7 PLACES)

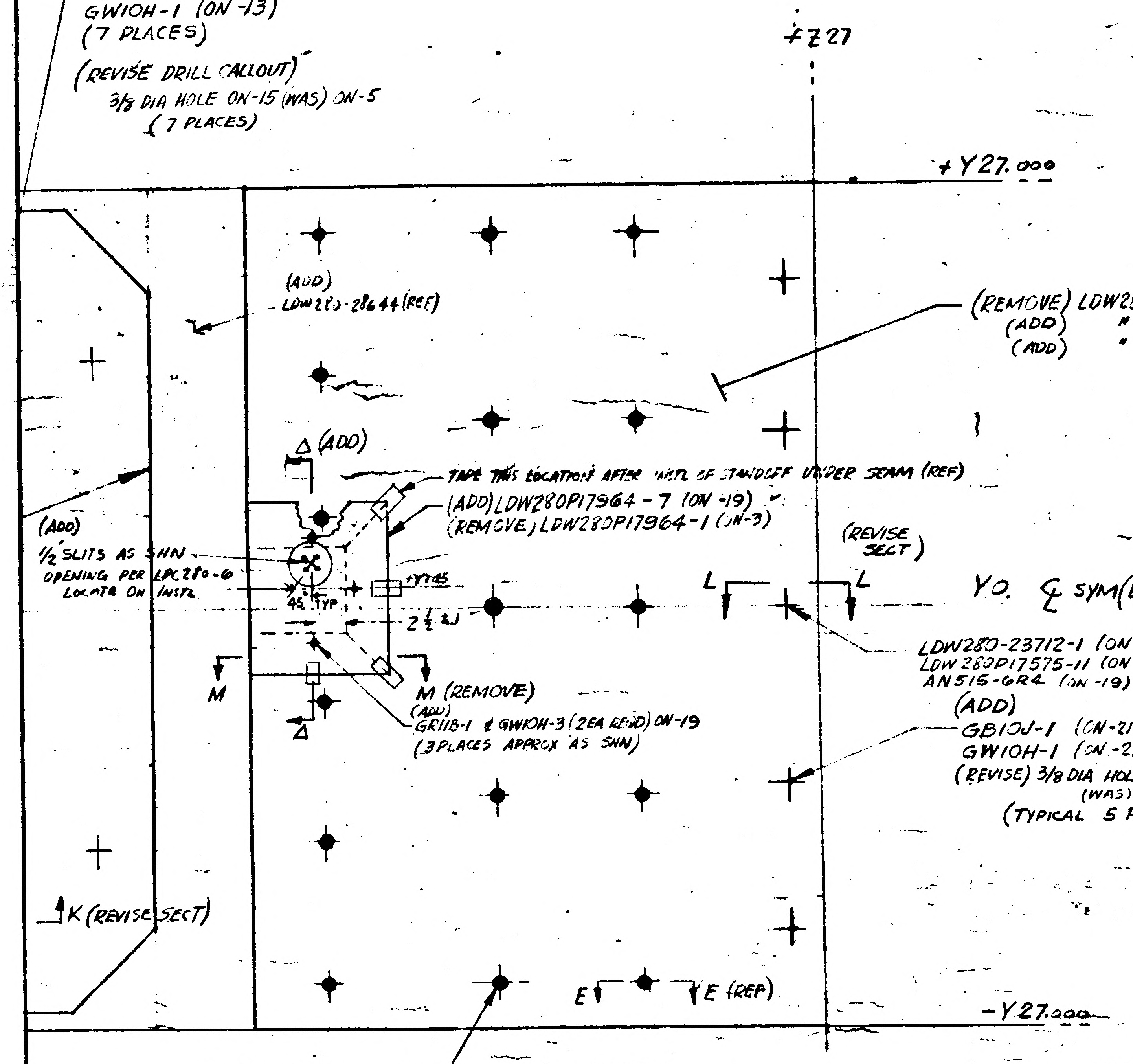
+Z27
+Y27.000
(ADD)
LDW280-28644 (REF)
(REMOVE) LDW280P17460-17 (ON-7)
(ADD) " " -61 (ON-23)
(ADD) " " -43 (ON-25)
(ADD)
TAPE THIS LOCATION AFTER INSTL OF STANDOFF UNDER SEAM (REF)
(ADD) LDW280P17964-7 (ON-19)
(REMOVE) LDW280P17964-1 (ON-3)
(ADD)
1/2 SLITS AS SHN
OPENING PER LPC 280-6
LOCATE ON INSTL
(REVISE SECT)
L L
Y0. ℄ SYM (EXCEPT AS NOTED)
LDW280-23712-1 (ON-9)
LDW280P17575-11 (ON-19)
AN515-6R4 (ON-19)
REF
M M (REMOVE)
(ADD)
GR11B-1 & GW10H-3 (2EA REQD) ON-19
(3 PLACES APPROX AS SHN)
(ADD)
GB10J-1 (ON-21)
GW10H-1 (ON-21)
(REVISE) 3/8 DIA HOLE ON-23 & -25
(WAS) ON-7
(TYPICAL 5 PLACES)
K (REVISE SECT)
E E (REF)
-Y27.000

UPPER DECK - SH 3 (REF)

ll) 5/32 DIA HOLE (ON-23) WAS 1/4
(REMOV)E) LDW280P17700-7 STANDOFF
LDW280P17700-17 STANDOFF ON-21
(T CORRECTION) GT535G-LAS-0004 WAS LDW280P17936-13
(TYPICAL 16 PLACES)

-LAS-0004 (REF)
P17700-17 (REF) (ADD)
-7 (REMOVE)
P17523-3 (REF)

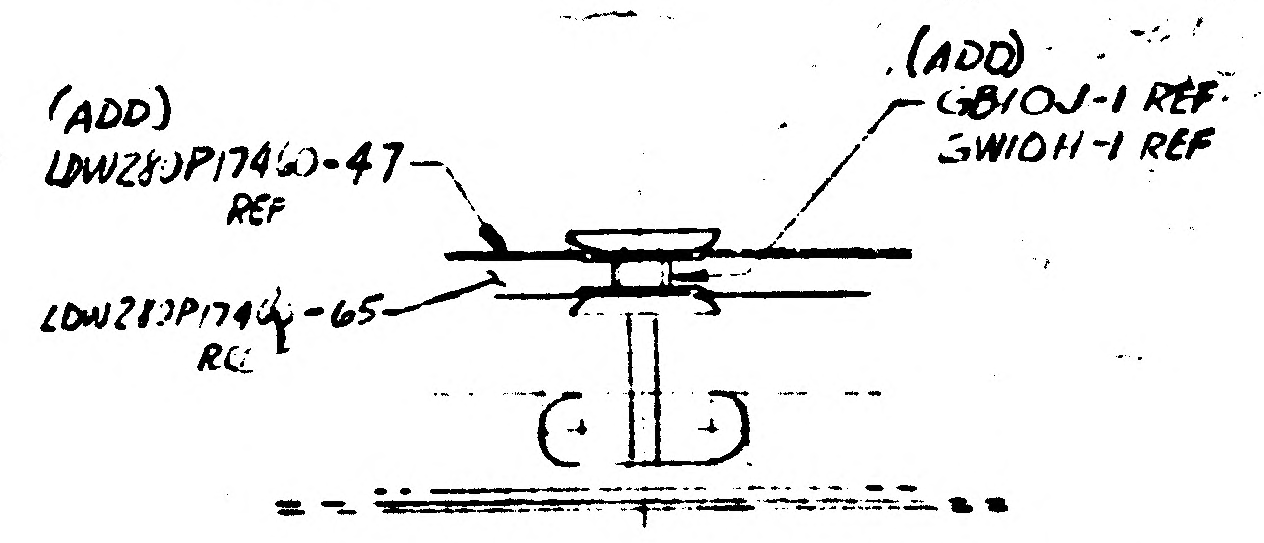
(ADD)
LDW280P17460-47
REF
LDW280P17460-65
REF
(ADD)
GB10J-1 REF
GW10H-1 REF

(REVISE) SECT KK (ZONE 7A) REF
NO SCALE

(ADD)		(REMOVE)
LDW280-51656-9	REPLACES	LDW280-51656-1
" -19	REPLACES	" -3
" -21	REPLACES	" -7
" -23	(NEW ASSY)	
" -25	(NEW ASSY)	

NOTE: -9, -19, -21 IDENT TO -1, -3, -7 RESP (EXCEPT AS NOTED)

03/03 NAS 9-1100

1. IN FIELD OF DWG & BILL OF MATERIALS:

a) LDW280-51656-9, -11, -19, -13, -51656-21, P17460-61, P17460-65 REPLACES LDW280-51656-1, -3, -5, -51656-7, P17460-17, P17460-15
P17964-7 REPLACES LDW280P17964-1
P17700-17 REPLACES LDW280P17700-7
GT15C-1 & GT835P-8 TAPES REPLACE #852 TAPE
GT535G-LAS-0004, GT535L-HA-0250 REPLACES LDW280P17936-13, -29 RESP. (NOTE: CALLOUT CHG ONLY. PART IDENTICAL. NO REWORK REQD)

b) CREATE LDW280-28656 -9, -11, -13, -15, -17, -19, -21, -23, -25, -27

c) REMOVE
LDW280-23712-1 (2),
LDW280-23712-3 (2),
LDW280P17575-11 (4)
LDW280P17700-7 (ALL)
LDW280P17964-1 (1)
#852 TAPE (ALL)
LDW280P17460-15 (1)
LDW280P17460-17 (1)
LDW280P17936-13 (ALL)
LDW280P17936-29 (ALL)
LDW280P17936-51 (ALL)
AN515-6R4 (4)
MS20470A3 (5)
LDW280-51656-1
-3
-5
LDW280-51656-7

d) ADD
GT15C-1 (AS REQD)
GR11B-1 (6) ON-19
GW10H-1 (24) ON-13, (5) ON-21
GW10H-3 (6) ON-19
GB10J-1 (24) ON-13, (5) ON-21
GT835P-8 (AS REQD)
LDW280P17524-1 (12) ON-13
P17460-43 ON-25
P17460-47 ON-27
P17460-61 ON-23
P17460-65 ON-15
P17700-17 (24) ON-13, (16) ON-21
GS5775-1 (AS REQD)
LDW280P17964-7 ON-19
GT535G-LAS-0004 (24) ON-13
GT535G-LAS-0004 (16) ON-21
GT535L-HA-0250 (2) ON-11
LDW280-51656-9
-11
-13
-15
-17
-19
-21
-23
-25
LDW280-51656-27

2. REVISE B/M AS SHN:

-27	-25	-23	-21	-19	-17	-15	-13	-11	-9	PART NO.	NOMENCLATURE
		AS REQD								GS5775-1	STAPLES
		AS REQD								GT835P-8	TAPE
		AS REQD								GT15C-1	TAPE
			5				24			GB10J-1	BUSHING } GROMMET ASSY
			5				24			GW10H-1	WASHER
				6						GR11B-1	RETAINER } SNAP ASSY
				6						GW10H-3	RETAINER
				5				23		AN515-6R4	SCREW
									✓	MS20470A3	RIVET
				1						LDW280P17964-7	COVER
		16					24			LDW280P17523-3	CAP
							12			LDW280P17524-1	PATCH
		16					24			LDW280P17700-17	STANDOFF
				5				23		LDW280P17575-11	RETAINER
									13	LDW280-23712-3	STANDOFF
									13	LDW280-23712-1	STANDOFF
								2		GT535L-HA-0250	TAPE - HOOK
									40	GT535G-LAS-0004	TAPE - LOOP
					1					LDW280P17460-69	BLANKET ASSY
						1				-65	
		1								-61	
1										-47	SEE DWG
	1									LDW280P17460-43	BLANKET ASSY
						1	1			LDW280-51656-27	BLANKET ASSY ~~(HOLES ADDED TO 1 LAYER)~~ (END PANEL - LOWER DECK)
		1	1							-25	BLANKET ASSY ~~(HOLES ADDED TO 1 LAYER)~~ (UPPER DECK)
			1							-23	BLANKET ASSY ~~(HOLES ADDED TO 25 LAYERS)~~ (UPPER DECK)
				1						-21	BLANKET HARDWARE ASSY ~~(UPPER DECK)~~
										-19	BLANKET INSTL ~~(UPPER DECK)~~
							1			-17	BLANKET ASSY ~~(HOLES ADDED TO 7 LAYERS) (LOWER DECK)~~
							1			-15	BLANKET ASSY ~~(HOLES ADDED TO 25 LAYERS)~~ (END PANEL - LOWER DECK)
								1		-13	BLANKET HARDWARE ASSY ~~(END PANEL - LOWER DECK)~~
										-11	BLANKET INSTL ~~(END PANEL LOWER DECK)~~
										LDW280-51656-9	STANDOFF INSTL

3. REVISE MOD/BLK AS SHOWN:

LDW280-51553	LM 1	1	LDW280-51509	LM 1	1
N/A	MOD	QTY	N/A	MOD	QTY
-11 -19			-9		

4. IN FIELD OF DWG:

a) REMOVE SECT DD, HH, MM, & ADD SECT ΔΔ, ▭▭, ◇◇ (USE NEXT AVAILABLE LETTER)
b) REMOVE DETAIL F & ADD DETAIL ● (USE NEXT AVAILABLE LETTER)
c) REVISE SECT AA, BB, GG, JJ, EE, LL, KK, CC,
d) REVISE NOTE #2 TO READ "FASTEN LDW280P17523-3..... (WAS) "BOND LDW280P17523-3....... & PER LPC 14." (WAS) WITH EPON 934 PER LSP 14-225."
e) REVISE NOTE #3: REMOVE LDW280P17936-51 ITEM FROM NOTE 2 (2 PLACES)
f) REMOVE NOTE 4 & ADD NOTE ☰, ᴡᴡ, ≨, =, #,

NOTE ☰: "ALUMINIZED MYLAR PARTS SHALL BE MADE TO EXPANDED DIMENSIONS. THE EXPANSION RATIO IS TO BE .050 INCH'S PER INCH." (EXAMPLE: 10 INCH'S EXPANDS TO 10.5 INCH'S)

NOTE ᴡᴡ: "ALUMINIZED POLYIMIDE PARTS SHALL BE MADE TO EXPANDED DIMENSIONS. THE EXPANSION RATIO IS TO BE .070 INCH'S PER INCH." (EXAMPLE: 10 INCH'S EXPANDS TO 10.7 INCH'S)

NOTE ≨: FABRICATE BLANKET ASSY'S PER LPC 280-1

NOTE =: THE FOLLOWING PARTS ARE INTERCHANGEABLE & MAY BE USED FOR FUTURE REPLACEMENTS
LDW280P17700-17 IS INTERCHANGEABLE WITH GS26D-1

NOTE #: THE FOLLOWING PARTS ARE IDENTICAL
LDW280P17936-13 IS IDENTICAL TO GT535G-LAS-0004
-29 " " GT535L-HA-0250

g) REVISE NOTE #1 BOND GT535G-LAS-0004..... (WAS) BOND LDW280P17936-13..... (2)

LDW280-51656
CONT'D ON LDW...

DETAIL SPEC REQD	CLASS II ENGRG CHG	CLASS I ENGRG CHG
CONTROL INFO NO.	LDW280A0180	
REASON FOR EO	ADDITIONAL THERMAL REQUIREMENTS	
DESCRIPTION OF EO	IN FLD & BM, REMOVED -1-3-5-7 & ADDED -9-11-13-15-17-19-21-23-25 & -27 IN FLD, REMOVED SECT DD, HH, MM. DETAIL F, & NOTE 4 , ADDED SECT ΔΔ, ▭▭, ◇◇, DETAIL ●, & NOTE ☰, ᴡᴡ, ≨, =, # , REVISED NOTE #2, #3, AS NOTED ABOVE IN ITEM 4d, 4e, & 4g	
GRUMMAN EO RELEASE		
MODEL	LM	
EFFECTIVITY: PROCURING ACT. NO.	LM 1-(31)	
DRAWING REVISION REQD	REVISE DWG ✓	RECORD EO
DISPOSITION OF PARTS	REWORK ✓	SCRAP
LTR	1	
DATE	11/2/66	11-2-66
	VDI	SUPPORT THERMO
RELIAB GROUP	GROUP LEADER 11/1/66	STRESS GROUP 11/2/66
LIAISON ENGRG	PROJ ENGR 11-2-66	
PRIORITY	C	
DRAWING TITLE	STANDOFF INSTALLATION DESCENT STAGE - FWD - THERMAL	
ENGINEERING ORDER: DRAWING NO	LDW280-51656	EO NO. A2
CODE IDENT NO	26512	
GRUMMAN AIRCRAFT ENGINEERING CORP	BETHPAGE, L. I., N. Y.	
ISSUED BY	J. LANG J. STRAKOSCH	X1153
SECTION	VEHKLE DESIGN INT	
GROUP NO.	335	PL 35

THIS IS AN ORIGINAL EO 11-1-66

ENG 32.1 REV 3-66

GRUMMAN AIRCRAFT ENGINEERING CORP.

CODE IDENT NO. 26512

ENGINEERING ORDER

DWG. NO.	LDW280-51656	EO NO.	A4
CONTROL INFO NO.	LDW280A-4308		

ON-13 REMOVE LDW280P17524-1; 12 PLCS

ON-19 LDW280P17964-3 WAS LDW280P17964-7

THERMAL SHLD

2

DETAIL SPEC REQ	☐	CL II ENGRG CHG	☐	CL I ENGRG CHG	☐	

REASON FOR EO	DESCRIPTION OF EO	⑩ GAEC EO RELEASE
TO MAKE DWG. AGREE WITH TEMPLATE	ON-13 REMOVED LDW280P17524-1; 12 PLCS ON-19 LDW280P17964-3 WAS LDW280P17964-7	FR 12/13/6

MODEL	EFFECTIVITY		
	PROCURING ACTIVITY NO.	GAEC UNIT NO.	SUB CONTR UNIT NO.
LM		LM-1 (31)	

DRAWING CHANGE REQD		DISPOSITION OF PARTS		APPROVED BY									
✓		NOT	REQ'D	DATE	12/13/66	12/13		12/13/66	12/13/66		12/13	12.13.66
REVISE DWG	RECORD EO	REWORK	SCRAP	1	VDI	~~[illegible]~~ THERM	RELIAB. GROUP	GROUP LEADER	STRESS GROUP	LIAISON ENGRG	PROJ ENGRG	~~GOVT~~

PRIORITY	DRAWING TITLE	DRAWING NO.	EO NO.
C	STANDOFF INST'L D/S FWD THERMAL	LDW280-51656	A4

ISSUED BY T. AMBROSIO / STRAKOSCH 1153 SECTION V.D.I. GROUP NO. 335 PL 35

01 NAS 9-1100

B

ENG 32.1 REV 3-65

GRUMMAN AIRCRAFT ENGINEERING CORP.
CODE IDENT NO. 26512
ENGINEERING ORDER

*

DWG. NO. LDW280-51656		EO NO. B1
CONTROL INFO NO. LDW280A 5949		

IN F/D & B/M FOR -25 ASSY ADD LDW280P17460-75
BLANKET ASSY

ADD NOTE: GS 26D-1 STANDOFFS MAY BE USED AS
ALTERNATE FOR LDW280P17700-17 & LDW280P17523-3

* REWORK AS
SHOWN

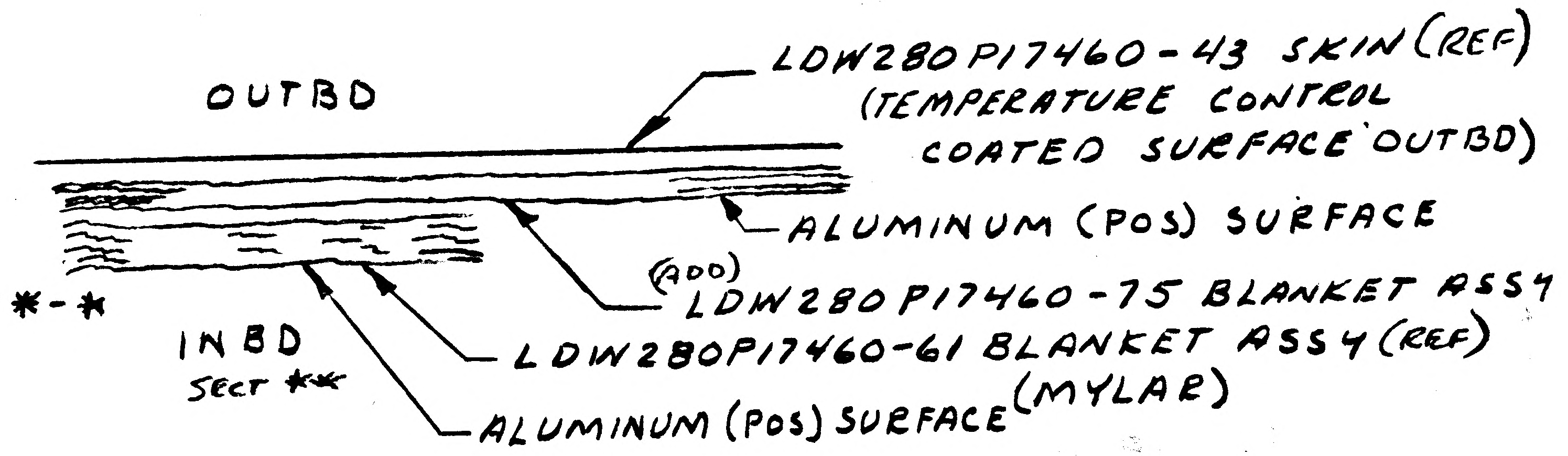
OUTBD
LDW280P17460-43 SKIN (REF)
(TEMPERATURE CONTROL
COATED SURFACE OUTBD)
ALUMINUM (POS) SURFACE
(ADD)
LDW280P17460-75 BLANKET ASSY
LDW280P17460-61 BLANKET ASSY (REF)
(MYLAR)
ALUMINUM (POS) SURFACE
INBD
SECT *-*

ADD TYP SECT *-*

* = NEXT AVAIL. LTR

DETAIL SPEC REQ	☐	CL II ENGRG CHG	☑	CL I ENGRG CHG	☐	LCD 19-1135	5

REASON FOR EO	DESCRIPTION OF EO	GAEC EO RELEASE
ADDITIONAL THERMAL PROTECTION (LCR19-1135)	IN F/D & B/M FOR -25 ADDED -75 ADDED GS26D-1 STANDOFFS AS ALTERNATES FOR LDW280P17700-17 & LDW280P17523-3	C JK 3/23/67

MODEL	EFFECTIVITY: PROCURING ACTIVITY NO.	GAEC UNIT NO.	SUB CONTR UNIT NO.
LM		LM-1 (31)	

DRAWING CHANGE REQD: REVISE DWG	RECORD EO	DISPOSITION OF PARTS: REWORK	SCRAP
✓		*	

APPROVED BY							
DATE	3/16/67	3/1/67		3/16/67	3/20/67		3/21/67	3-23-67
5	VD1	~~SUPPORT~~	RELIAB. GROUP	GROUP LEADER	STRESS GROUP	LIAISON ENGRG	PROJ ENGRG	GOVT

PRIORITY	DRAWING TITLE	DRAWING NO.	EO NO.
C	STAND OFF INSTL DESCENT STAGE FWD THERMAL	LDW280-51656	B1

ISSUED BY H. PALLMEYER / J. STRAKOSCH SECTION VEH DES INT GROUP NO. 335 PL 25

01

NAS 9-1100

ENG 32.2 REV 3-66

FITH

GRUMMAN AIRCRAFT ENGINEERING CORP.
CODE IDENT NO. 26512
ENGINEERING ORDER

DWG. NO. LDW280-51656
EO NO. B2
CONTROL INFO NO. LDW280A6703

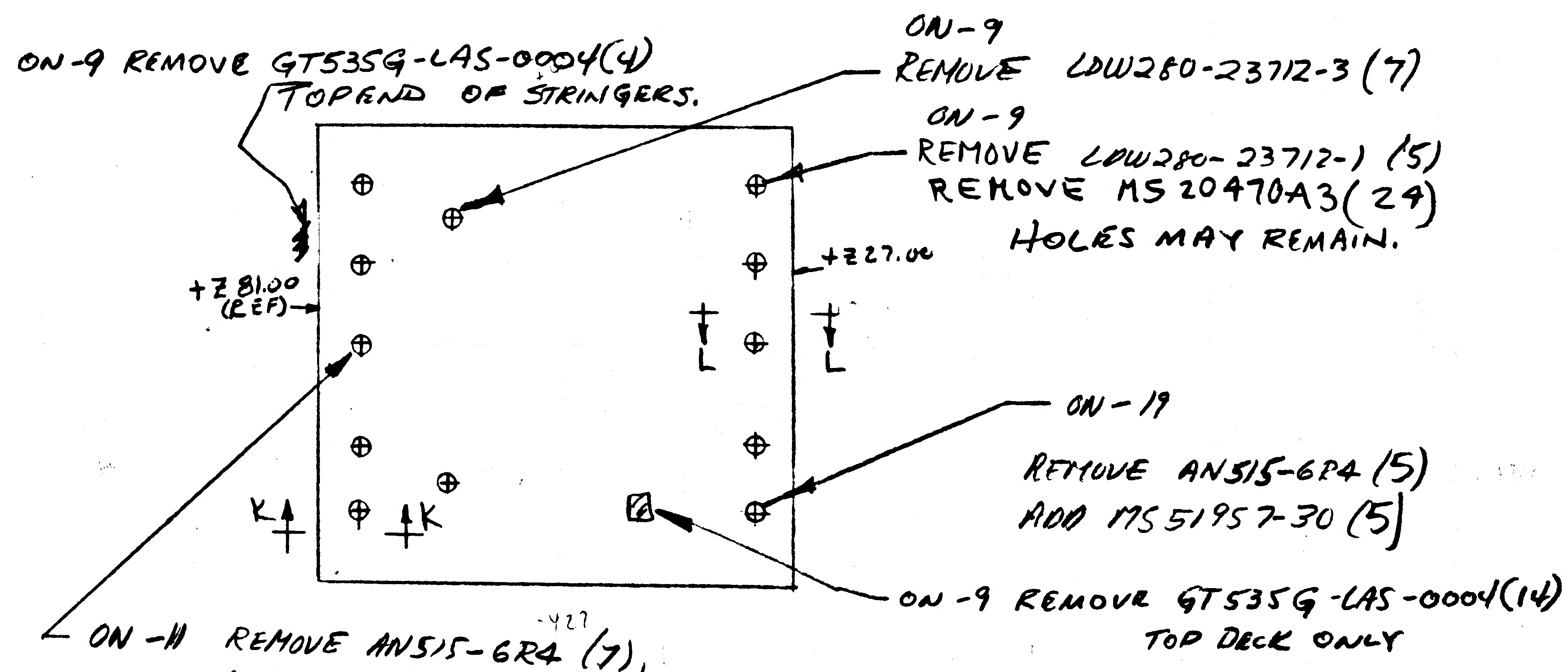
+Z 81.00 (REF)
+Z27.00
K
K
L
L

ON-9 REMOVE GT535G-LAS-0004(4) TOPEND OF STRINGERS.

ON-9 REMOVE LDW280-23712-3 (7)

ON-9 REMOVE LDW280-23712-1 (5)
REMOVE MS20470A3(24)
HOLES MAY REMAIN.

ON-19
REMOVE AN515-6R4 (5)
ADD MS51957-30 (5)

ON-9 REMOVE GT535G-LAS-0004(14) TOP DECK ONLY

ON-11 REMOVE AN515-6R4 (7),
ADD MS51957-30 (7)

IN B/M LDW280-23712-3 (7) WAS (13)
IN FLD LDW280-23712-3 (7) WAS (14)

REVISE SECTIONS AS SHOWN

IN B/M & FLD
ON-9 LDW280-23712-1 (8) WAS (13)
ON-11 AN515-6R4 (16) WAS (23)
ON-19 REMOVE AN515-6R4 (5)
ON-11 ADD MS51957-30 (7)
ON-19 ADD MS51957-30 (5)

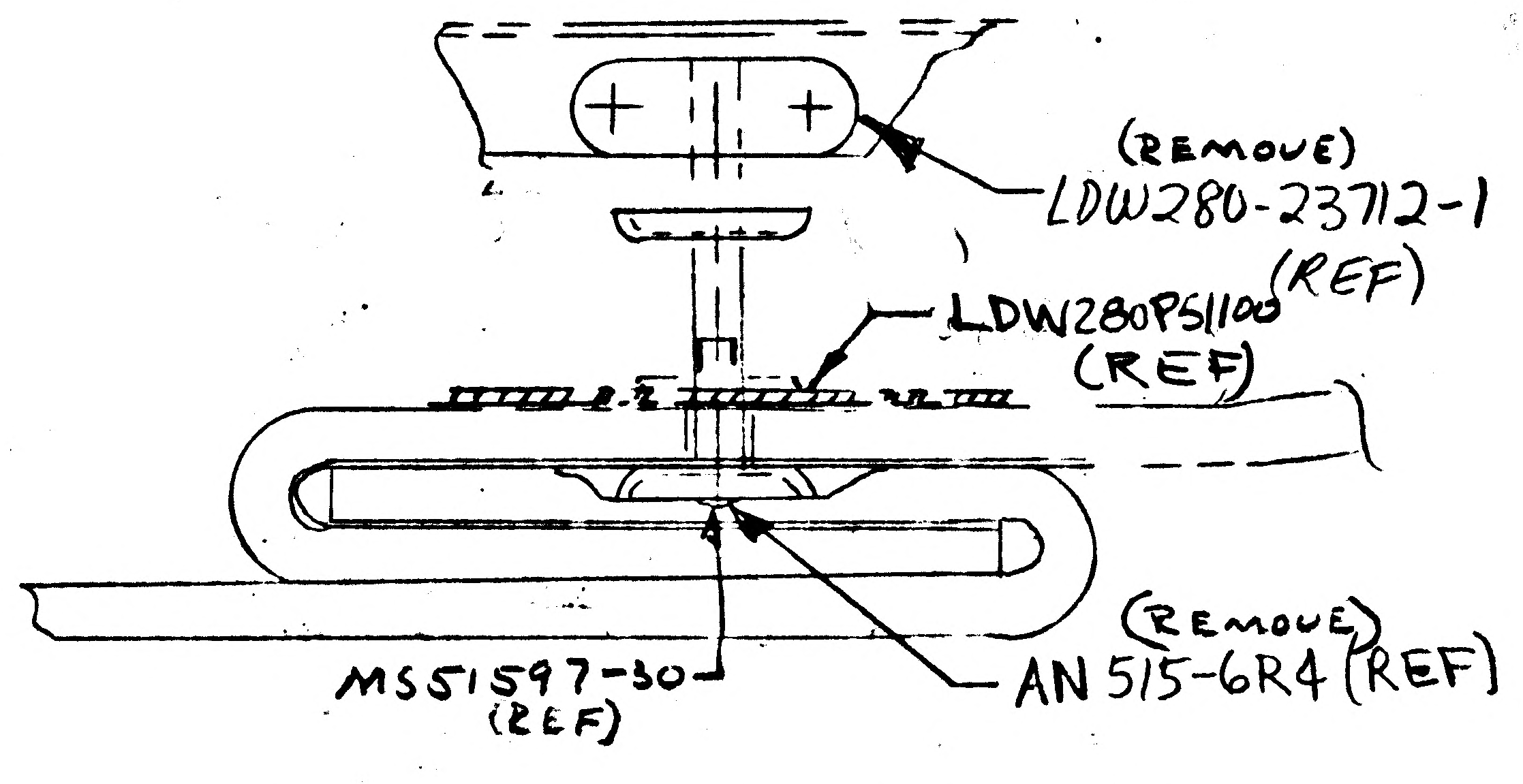
(REMOVE)
LDW280-23712-1
LDW280P51100 (REF)
(REF)
MS51597-30 (REF)
(REMOVE)
AN515-6R4 (REF)

SECTION L-L (REF)

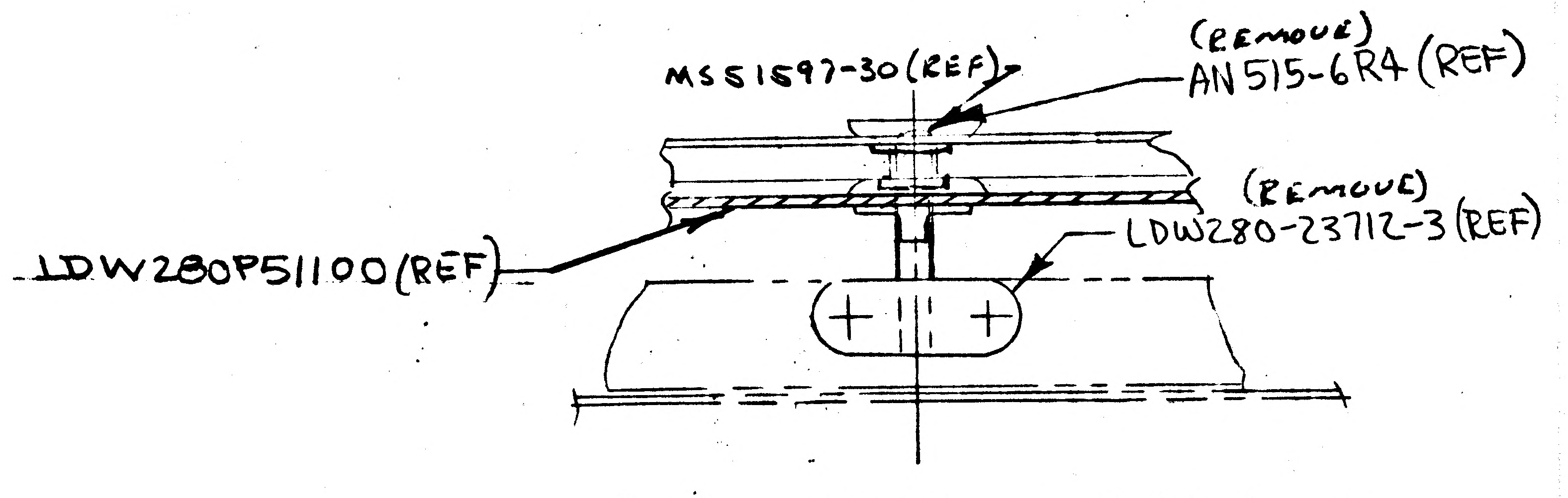
MS51597-30 (REF)
(REMOVE)
AN515-6R4 (REF)
(REMOVE)
LDW280-23712-3 (REF)
LDW280P51100 (REF)

SECTION K-K (REF)

DESCR. (CONT)
ON-9 REMOVED GT535G-LAS-0004(18)

DETAIL SPEC REQ ☐ CL II ENGRG CHG ☑ CL I ENGRG CHG ☐

LCD-1244

REASON FOR EO: TO PROVIDE FOR FITH SHIELD

DESCRIPTION OF EO: IN B/M & FLD ADDED TO -11 MS51957-30 (7); TO -19 MS51957-30(5) REMOVED FROM -9 LDW280-23712-1(5) REMOVED FROM -11 MS20470A3(24) REMOVED FROM -11 AN515-6R4(7) REMOVED FROM -19 AN515-6R4 (5) IN B/M REMOVED LDW280-23712-3(6) IN F-D (7)

GAEC EO RELEASE: JK 5/2/67

MODEL	EFFECTIVITY: PROCURING ACTIVITY NO.	GAEC UNIT NO.	SUB CONTR UNIT NO.
LM		LM-1(31)	

DRAWING CHANGE REQD: REVISE DWG	RECORD EO	DISPOSITION OF PARTS: REWORK	SCRAP
✓		✓	✓

APPROVED BY									
DATE	5/2/67	5/1/67		5/2/67	5/2/67		5/2/67	5-2-67	
5	VDZ	~~SUPPORT~~ THERMAL	RELIAB. GROUP	GROUP LEADER	STRESS GROUP	LIAISON ENGRG	PROJ ENGRG	~~CONF~~

PRIORITY: C
DRAWING TITLE: STANDOFF INSTL - DS. FWD THERMAL
DRAWING NO.: LDW280-51656
EO NO.: B2

ISSUED BY: HP E. FRANK / J. STRAKOSCH SECTION: VDZ GROUP NO. 335 PL 25

01

NAS 9-1100

ENG 32.1 REV 3-65 **L M**

GRUMMAN AIRCRAFT ENGINEERING CORP.
CODE IDENT. NO. 26512
ENGINEERING ORDER

DWG. NO. LDW280-51656		EO NO. B3
CONTROL INFO NO. LDW280 A 8140		

FOR -11 BLANKET INSTL ADD LDW280P18339-1 BLANKET ASSY
FOR -19 " " ADD LDW280P18339-3 BLANKET ASSY
FOR -11 & -19 ADD LDW280P18339-23 TAPE ASSY AS REQ

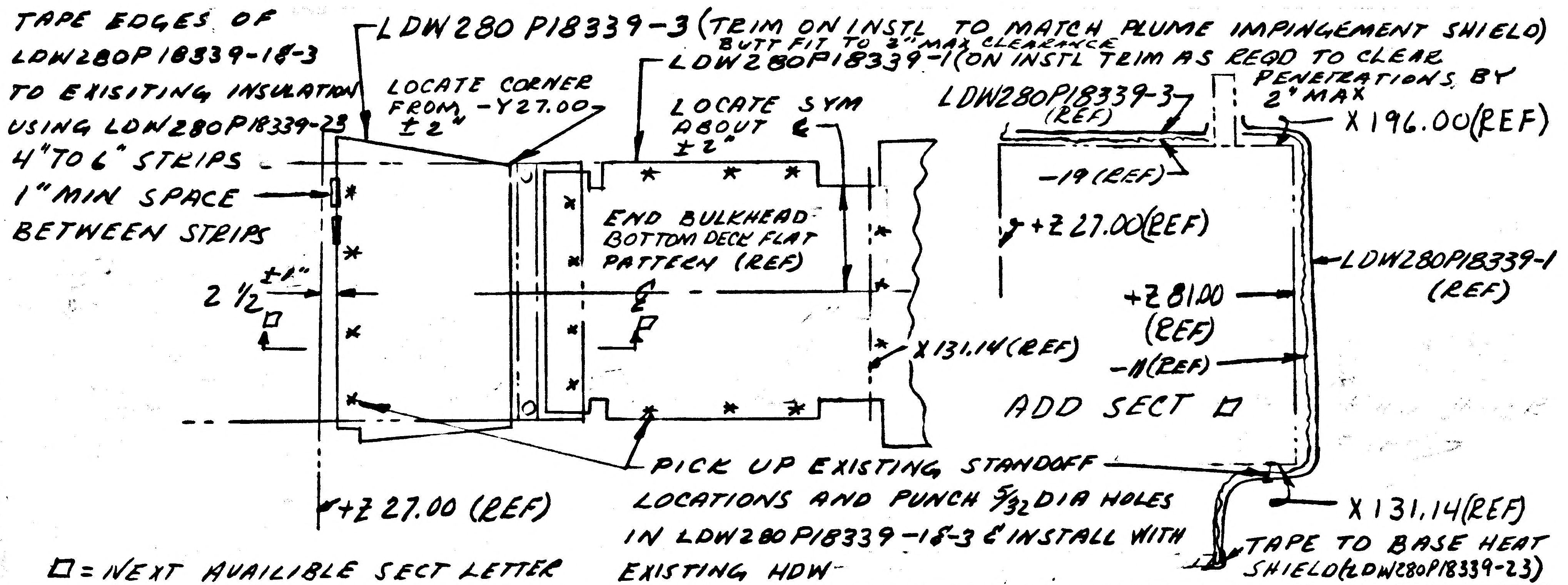
TAPE EDGES OF LDW280P18339-1 & -3 TO EXISITING INSULATION USING LDW280P18339-23 4" TO 6" STRIPS
1" MIN SPACE BETWEEN STRIPS
2 1/2 ±1"
☐
LDW280 P18339-3 (TRIM ON INSTL TO MATCH PLUME IMPINGEMENT SHIELD) BUTT FIT TO 2" MAX CLEARANCE
LOCATE CORNER FROM -Y27.00 ±2"
LDW280P18339-1 (ON INSTL TRIM AS REQD TO CLEAR PENETRATIONS BY 2" MAX
LOCATE SYM ABOUT ℄ ±2"
END BULKHEAD BOTTOM DECK FLAT PATTERN (REF)
℄
☐
X 131.14 (REF)
+Z 27.00 (REF)
PICK UP EXISTING STANDOFF LOCATIONS AND PUNCH 5/32 DIA HOLES IN LDW280P18339-1 & -3 & INSTALL WITH EXISTING HDW
LDW280P18339-3 (REF)
X 196.00 (REF)
-19 (REF)
+Z 27.00 (REF)
LDW280P18339-1 (REF)
+Z 81.00 (REF)
-11 (REF)
ADD SECT ☐
X 131.14 (REF)
TAPE TO BASE HEAT SHIELD (LDW280P18339-23)

☐ = NEXT AVAILIBLE SECT LETTER

DETAIL SPEC REQ		CL II ENGRG CHG		CL I ENGRG CHG	✓	LCD-1847	5

REASON FOR EO: ADDITIONAL THERMAL PROTECTION

DESCRIPTION OF EO:
FOR -11 ADDED LDW280P18339-1 & -23
FOR -19 ADDED LDW280P18339-3 & -23
ADDED SECT ☐

GAEC EO RELEASE: Ⓡ C JK 8/1/67

MODEL	~~PROCURING ACTIVITY NO.~~ EI	GAEC UNIT NO.	SUB CONTR UNIT NO.
LM	LFM-26	LM-1 (31)	

DRAWING CHANGE REQD: REVISE DWG	DRAWING CHANGE REQD: RECORD EO	DISPOSITION OF PARTS: REWORK	DISPOSITION OF PARTS: SCRAP
✓		-11 -19	

APPROVED BY	VDI	SUPPORT	~~RELIAB~~ GROUP	GROUP LEADER	STRESS GROUP	~~LIAISON~~ ENGRG	PROJ ENGRG	~~GOVT~~
DATE	7/31/67		7/31/67	7/31/67	7/31/67	PROJ KSC	7/31	8-1-67

PRIORITY	DRAWING TITLE	DRAWING NO.	EO NO.
C	STANDOFF INSTL D.S. FWD THERMAL	LDW280-51656	B3

ISSUED BY H. PALLMEYER / J. STRAKOSCH SECTION VEH DES INT GROUP NO. 335 PL 25

01

NAS 9-1100

REVISIONS FOR CONTINUATION OF REVISIONS SEE SHEET 1.11

CHANGE LTR	ITEM NO.	SHEET NO.	ZONE	GRUMMAN INFO ONLY	DET SPEC	CLASS I	CLASS II	ENGRG ORDER	DESCRIPTION	EFFECTIVITY	DISPOSITION OF EXISTING PARTS		CHANGED BY AND DATE	ENGRG APPD	GOVT APPD
											REWORK	SCRAP			
A	1	1.00 3.00 1.10 4.00 2.00 5.00 2.01 6.00						EO A1	EO A1 INITIAL DRAWING RELEASE PARTS MADE FROM EO	LM-1,2,3	NOT	REQD	J. GRIECO 1-27-67	3/28/67	
	2	1.00 1.10 3.00 5.00	A15 A17 A18 A20					EO A2	ADDED INFORMATION TO NOTE 1 RELOCATED STANDOFFS AND .030 IN/IN EXPANSION RATIO WAS .015 IN/IN FOR TRAMMEL AND CONTROL POINTS	LM-1	✓				
	3	1.10 1.00						EO A3	IN EFF BLK ADDED LM-2(32) LM-3(33)	LM-2,3	✓				
	4						✓	EO A4	IN FIELD AND B/M REMOVED -1,-3,-5, LDW280P17461-23, LDW280P17936-51 AND NOTE 4. ADDED -7-9-11-13-15-17-19-21 -23-25, LDW280P17461-39-41-55, LDW280P17524-1, LDW280P17700-17. LDW280P17700-17 WAS -7 LDW280P17572-23 WAS LDW280P17572-13; LDW280P17523-1 WAS LDW280P17523-3; LDW280-23713-13 WAS -3; LDW280-23713-15 WAS -5 IN FIELD FOR LDW280P17700-7 STANDOFFS, 5/32 HOLES WERE 1/4 ADDED NOTE 5, DETAIL U & V. FOR -7 ADDED LM-1 THRU LM-15 EFFECTIVITY, FOR -9 ADDED LM-1 THRU LM-3, FOR -19 ADDED LM-4 THRU LM-15. REVISED NOTE 3 BY REMOVING LDW280P17936-51 (2 PLACES) & ACCORDANCE WAS ACCODANCE REVISED NOTE 2 TO READ AS FOLLOWS BOND LDW280P17523-3 TO LDW280P17700-17 PER LPC280-14; ADDED LDW280P17590-11 IN FIELD ADDED NOTE 6 & 7	LM-1 THRU LM-15		✓			
	5							EO A5	ON -11 & -21 REMOVED LDW280P17524-1, ON -9 LDW280P17964-3 WAS LDW280P17964-7 3 PLACES		NOT	REQD			
	6	1.10 5.00 9.00	21B 21C 52B 52C						IN FIELD REMOVED CALLOUTS "OPP SIDE ¢ SYM ONLY COORDINATE ALIGNMENT OF LDW280P17461-39 & 41 WITH LDW280-28509" & "THIS SIDE ¢ SYM						
	7								IN F/D & B/M ADDED GS26D-1(38) WAS LDW280P17700-17(38). IN F/D IN SECT. F-F REMOVED DIM. 1 3/4 ± 1/4, REVERSED DIRECTION OF SECT. G-G & AC-AC. REV PICTURE OF SECT. B-B, G-G, M-M, N-N, R-R, W-W, Z-Z, AB-AB, AC-AC, AE-AE & AG-AG. ADDED NOTE #10, #11, #12 & REV NOTE #2-GS26D-1 WAS LDW280P17700-17. TO NOTE #3 ADDED-USING ASTROQUARTZ THREAD. REMOVED CALLOUT (2 PACES) 3/8 DIA. HOLE (8), GB10J-1(8), GW10H-1(8). IN SECT. F-F ADDED CALL OUT 3/8 DIA HOLE ON INSTL.	LM-1 THRU LM-15	NOT	REQD	V. NARONIS 2-27-67		

FOR CONTINUATION OF REVISIONS SEE SHEET 1.11

GRUMMAN AIRCRAFT ENGRG CORP, BETHPAGE, L. I., NEW YORK

SIZE	CODE IDENT NO.		
B	26512	LDW280-51657	A
SCALE NONE			SHEET 1.10

ENG 77.3 5-65

01 NAS 9-1100

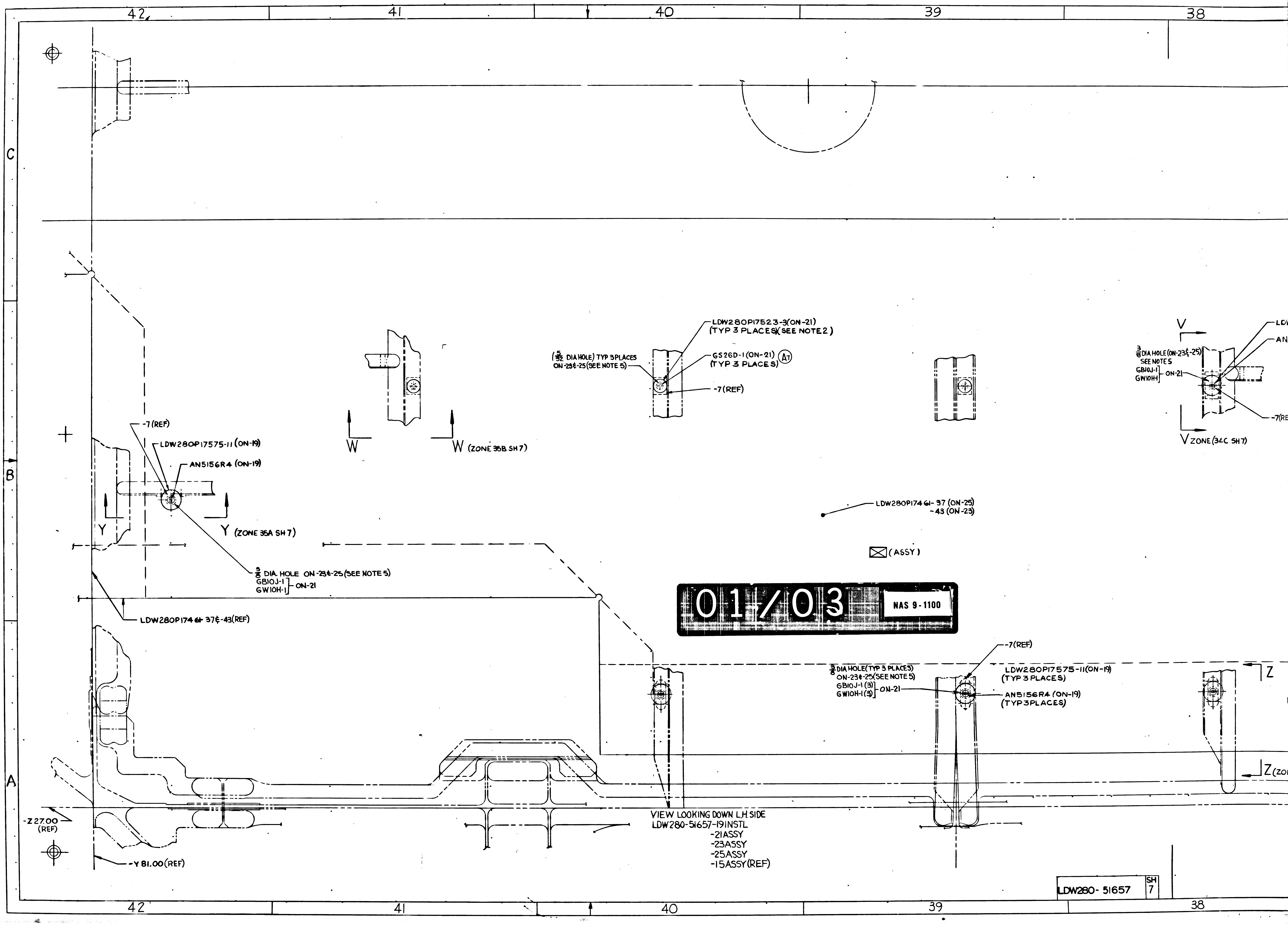
42
41
40
39
38
C
B
A
LDW280P17523-3(ON-21)
(TYP 3 PLACES)(SEE NOTE 2)
(5/32 DIA HOLE) TYP 3 PLACES
ON-23 & -25 (SEE NOTE 5)
GS26D-1 (ON-21) (A7)
(TYP 3 PLACES)
-7(REF)
V
3/8 DIA HOLE (ON-23 & -25)
SEE NOTES
GB10J-1
GW10H
ON-21
LDW
AN
-7(RE
V ZONE (34C SH 7)
-7(REF)
LDW280P17575-11 (ON-19)
AN5156R4 (ON-19)
W
W (ZONE 35B SH 7)
Y
Y (ZONE 35A SH 7)
3/8 DIA. HOLE ON-23 & -25 (SEE NOTE 5)
GB10J-1
GW10H-1
ON-21
LDW280P17461-37 & -43 (REF)
LDW280P17461-37 (ON-25)
-43 (ON-23)
☒ (ASSY)
-7(REF)
3/8 DIA HOLE (TYP 3 PLACES)
ON-23 & -25 (SEE NOTE 5)
GB10J-1 (3)
GW10H-1 (3)
ON-21
LDW280P17575-11 (ON-19)
(TYP 3 PLACES)
AN5156R4 (ON-19)
(TYP 3 PLACES)
Z
Z (ZO
-Z 27.00
(REF)
-Y 81.00 (REF)

VIEW LOOKING DOWN L.H. SIDE
LDW280-51657-19 INSTL
-21 ASSY
-23 ASSY
-25 ASSY
-15 ASSY (REF)

01/03 NAS 9-1100

LDW280-51657 SH 7

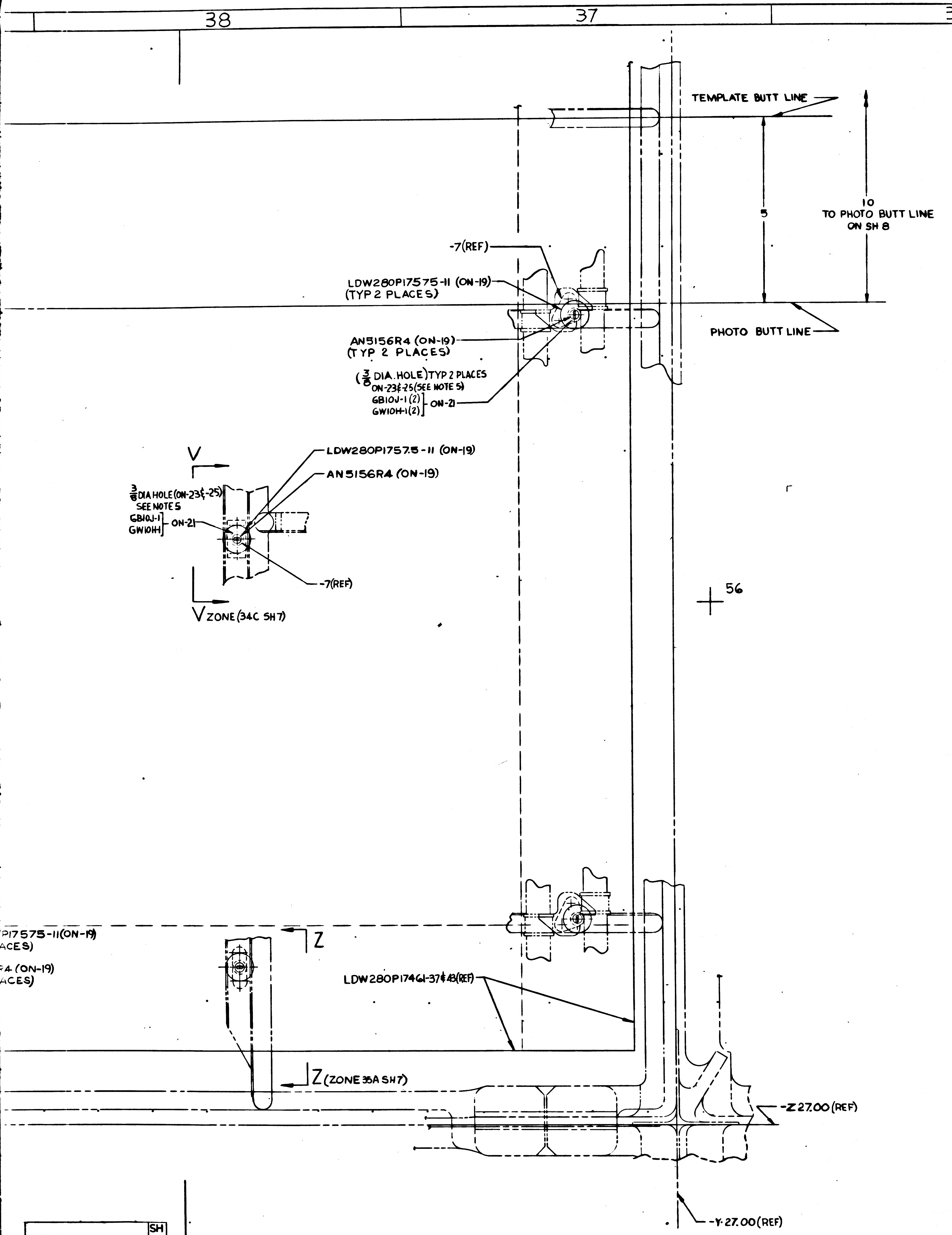
TEMPLATE BUTT LINE
5
10
TO PHOTO BUTT LINE
ON SH 8
PHOTO BUTT LINE
-7(REF)
LDW280P17575-11 (ON-19)
(TYP 2 PLACES)
AN5156R4 (ON-19)
(TYP 2 PLACES)
(3/8 DIA. HOLE) TYP 2 PLACES
ON-23 & -25 (SEE NOTE 5)
GB10J-1(2)
GW10H-1(2)
ON-21
V
LDW280P1757.5-11 (ON-19)
AN5156R4 (ON-19)
3/8 DIA HOLE (ON-23 & -25)
SEE NOTE 5
GB10J-1
GW10H-1
ON-21
-7(REF)
V ZONE (34C SH7)
56
P17575-11(ON-19)
ACES)
4 (ON-19)
ACES)
Z
LDW280P17461-37 & 43(REF)
Z (ZONE 35A SH7)
-Z 27.00 (REF)
-Y 27.00 (REF)

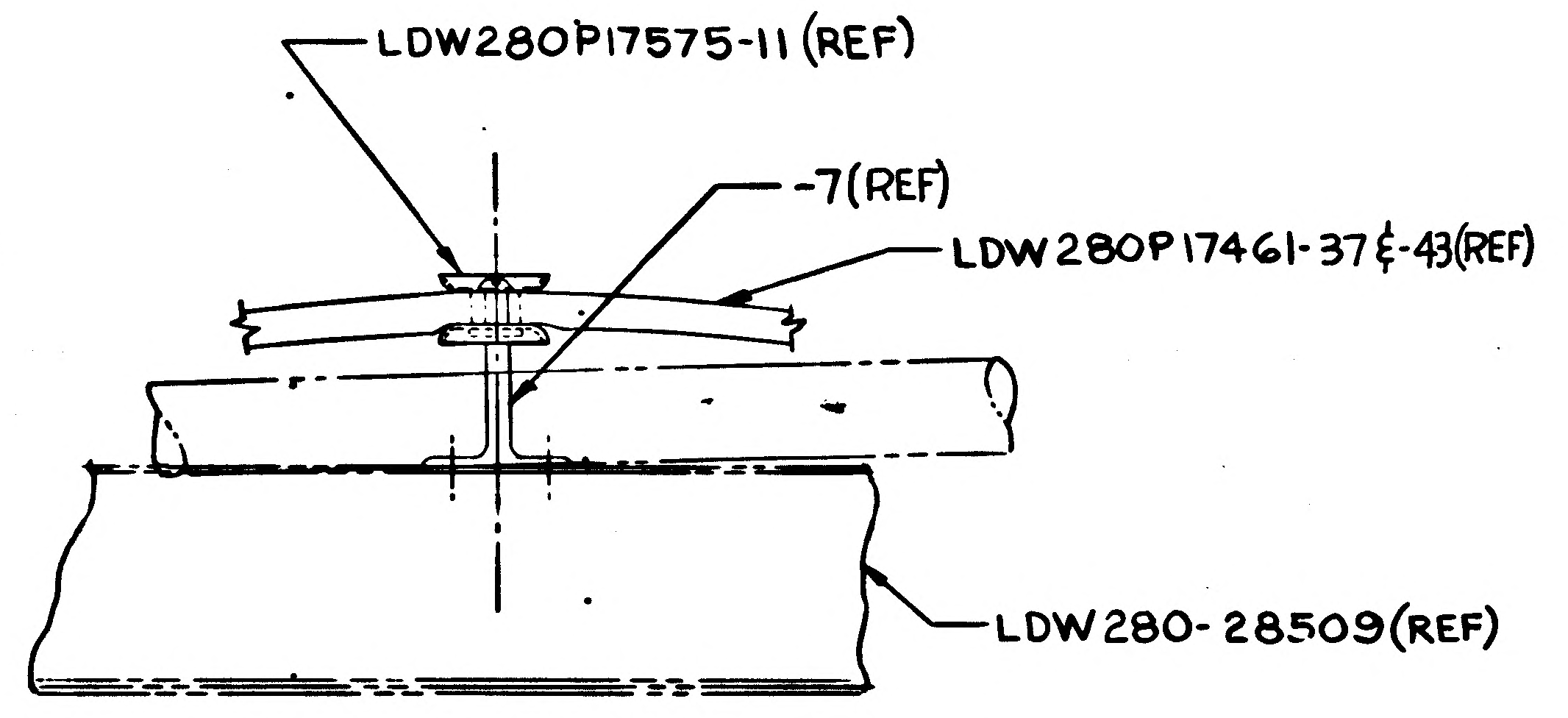
LDW280P17575-11 (REF)
-7(REF)
LDW280P17461-37 & -43(REF)
LDW280-28509(REF)

SECTION V-V (ZONE 38B SH7)
(ROTATED CCW90°) NO SCALE

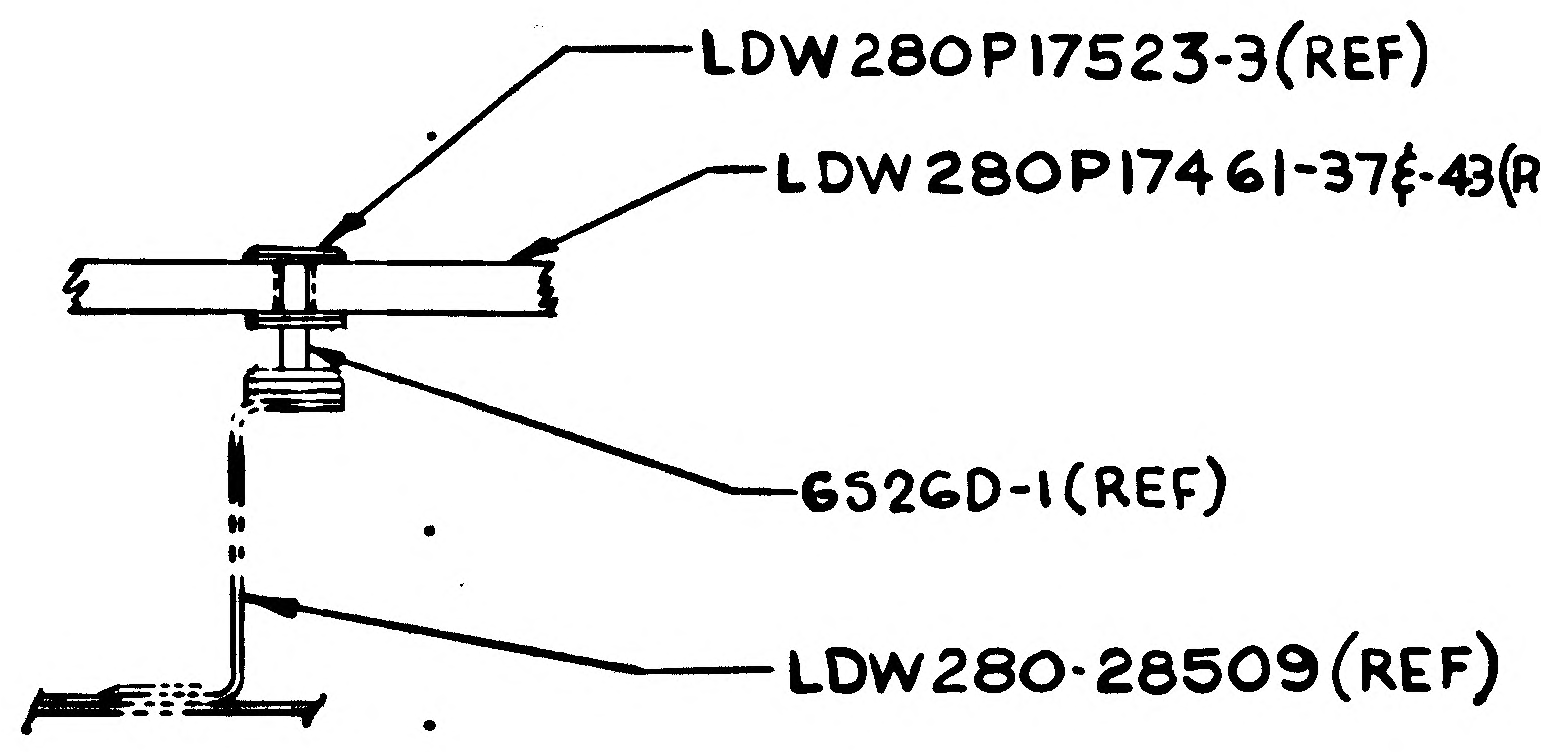
LDW280P17523-3(REF)
LDW280P17461-37 & -43(REF)
6526D-1(REF)
LDW280-28509(REF)

SECTION W-W (ZONE 41 B SH7)
NO SCALE
(A7)

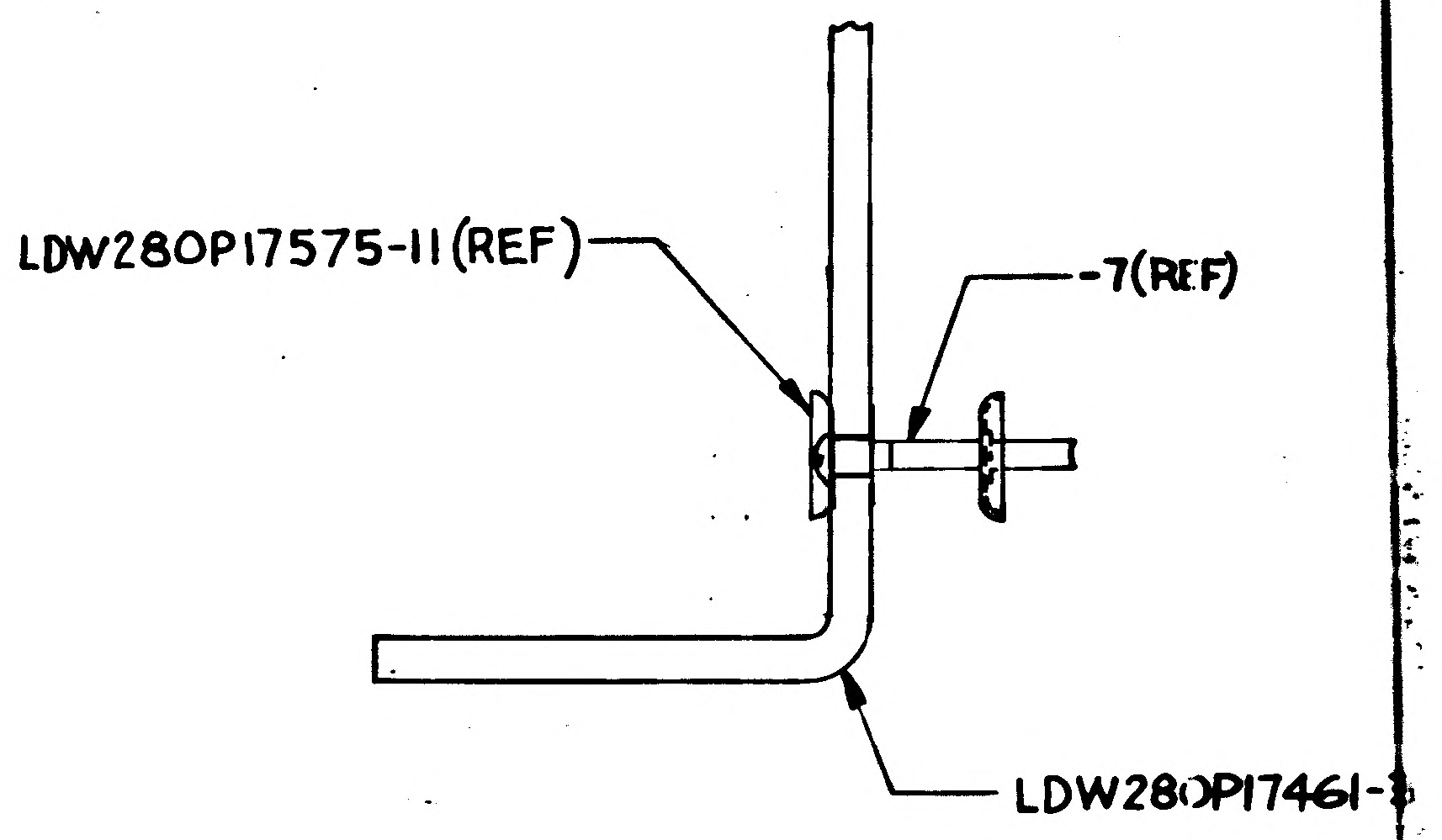
LDW280P17575-11(REF)
-7(REF)
LDW280P17461-

(A7)
SECTION Z-Z (ZONE 38A SH7)
NO SCALE

02/03 NAS 9-1100

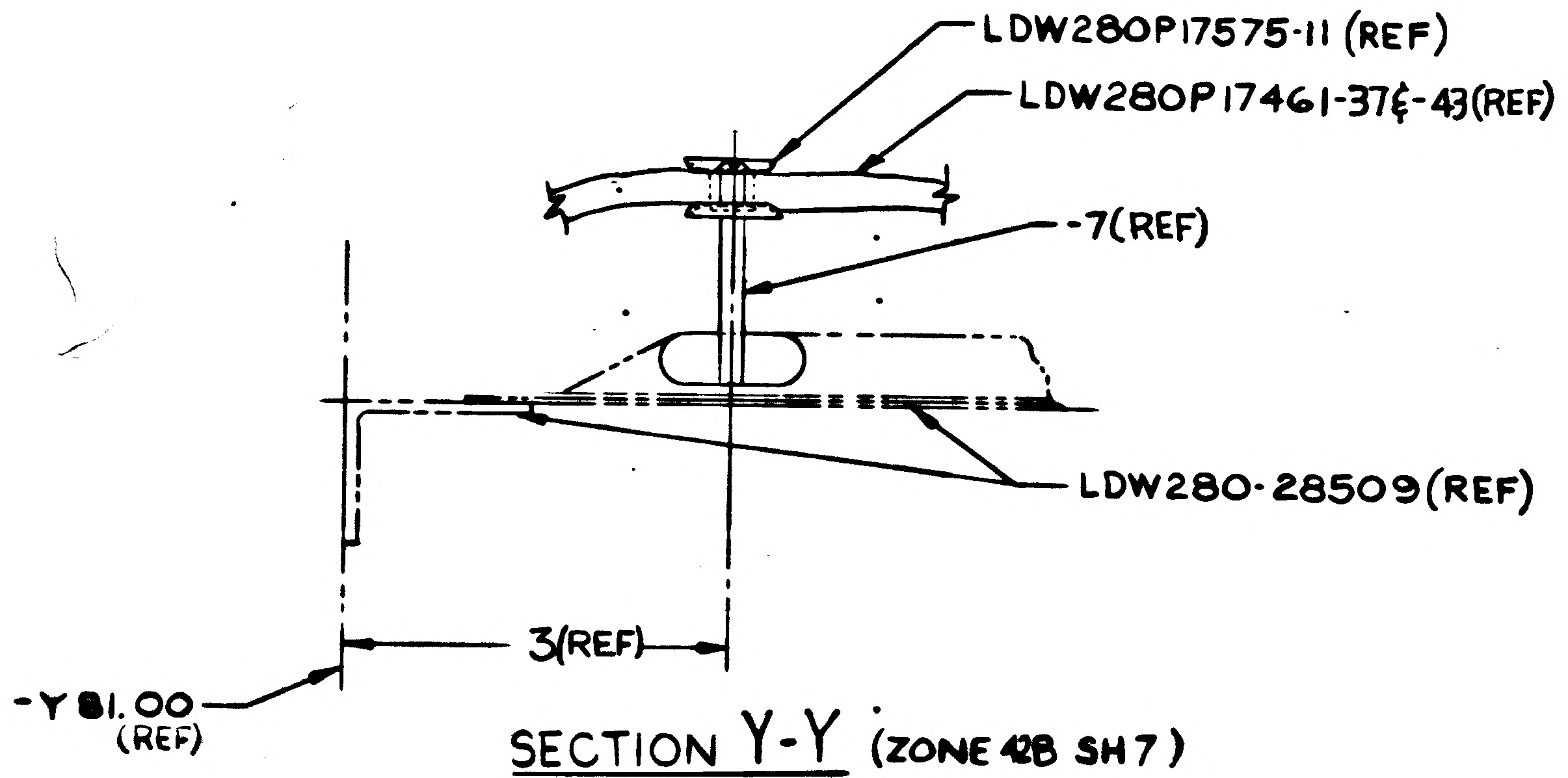
LDW280P17575-11 (REF)
LDW280P17461-37 & -43(REF)
-7(REF)
LDW280-28509(REF)
3(REF)
-Y 81.00
(REF)

SECTION Y-Y (ZONE 42B SH7)
NO SCALE

36 35 34 33 32

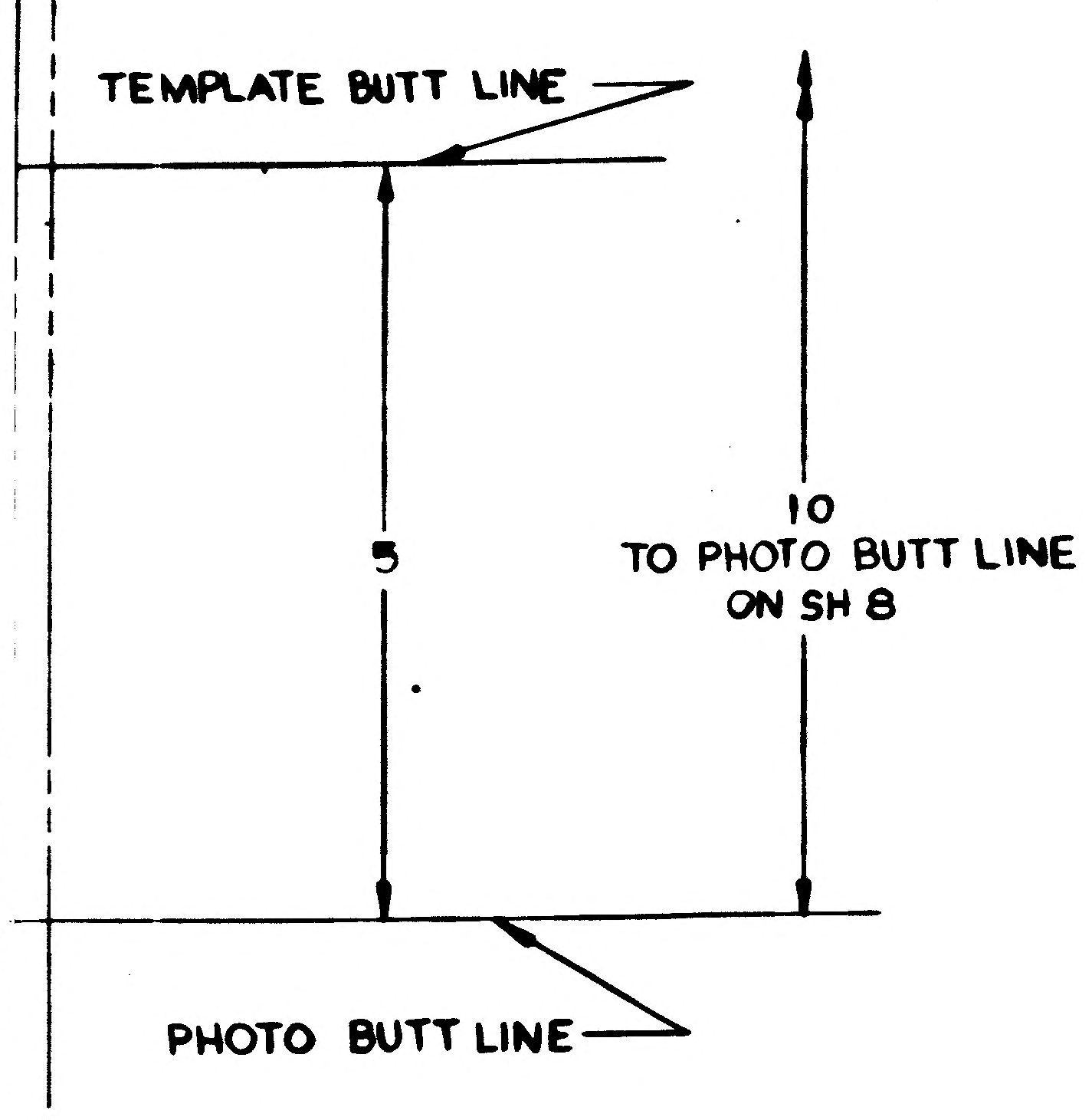
TEMPLATE BUTT LINE
5
10
TO PHOTO BUTT LINE
ON SH 8
PHOTO BUTT LINE

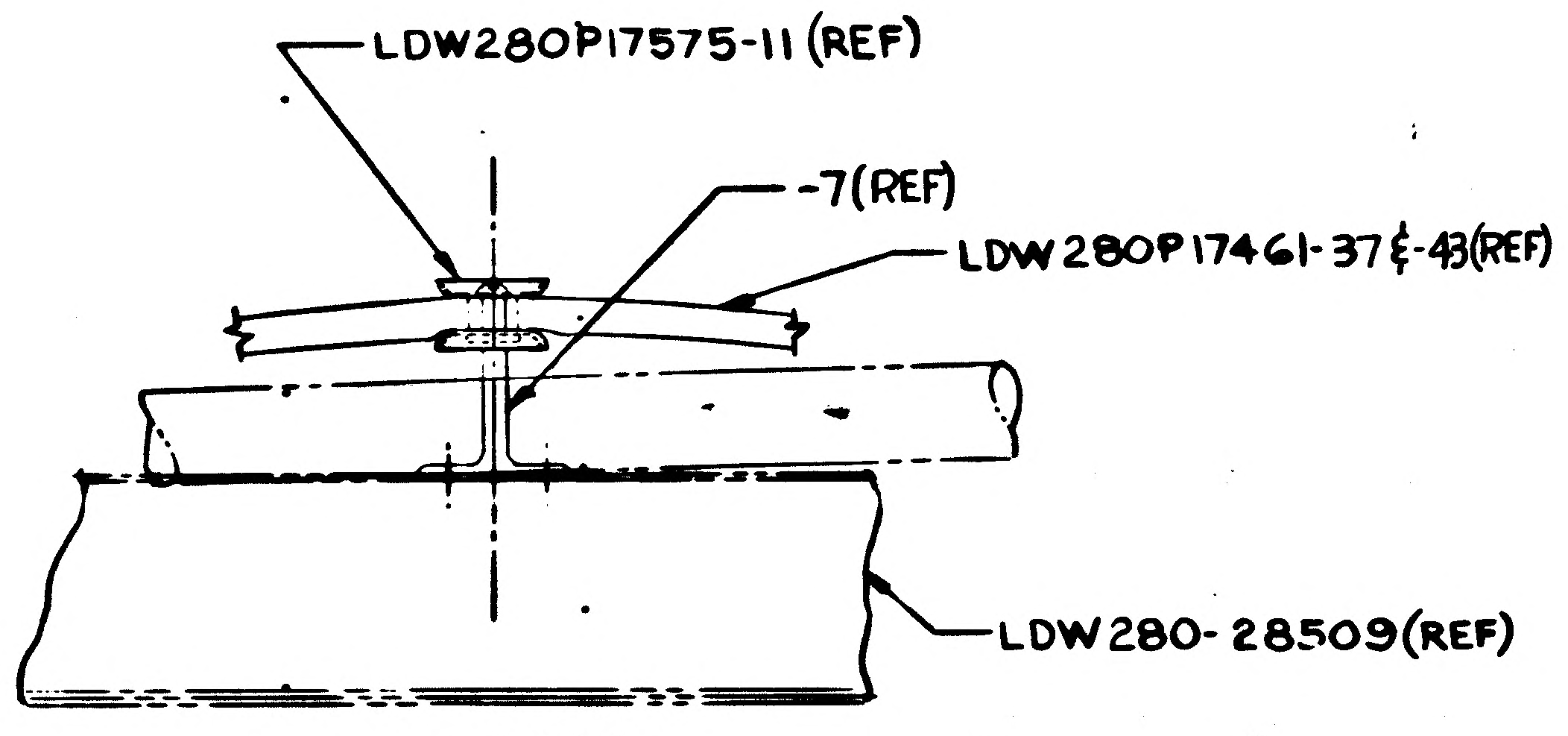
LDW280P17575-11 (REF)
-7(REF)
LDW280P17461-37&-43(REF)
LDW280-28509(REF)

SECTION V-V (ZONE 38B SH7)
(ROTATED CCW 90°) NO SCALE

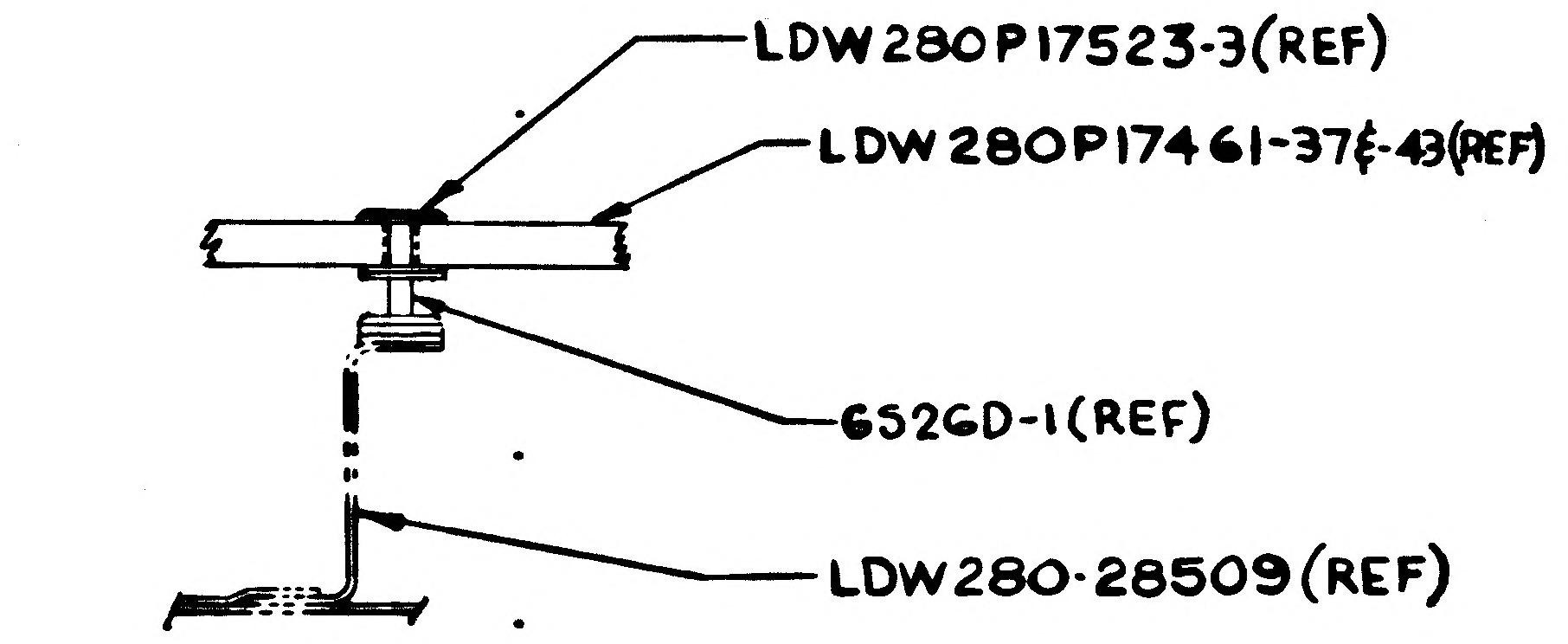
LDW280P17523-3(REF)
LDW280P17461-37&-43(REF)
6526D-1(REF)
LDW280-28509(REF)

SECTION W-W (ZONE 41B SH7)
NO SCALE
(A7)

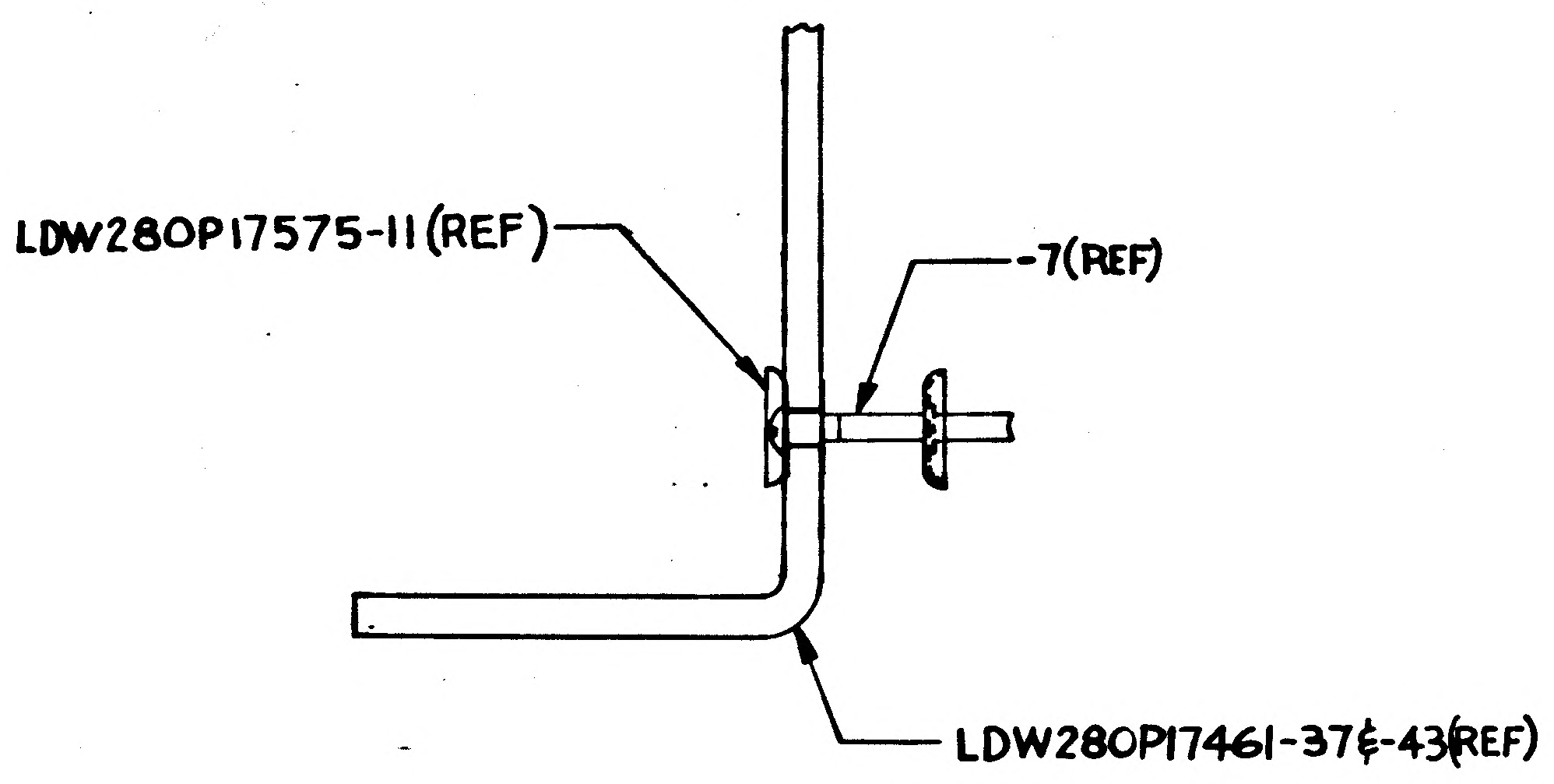
LDW280P17575-11(REF)
-7(REF)
LDW280P17461-37&-43(REF)

(A7)
SECTION Z-Z (ZONE 38A SH7)
NO SCALE

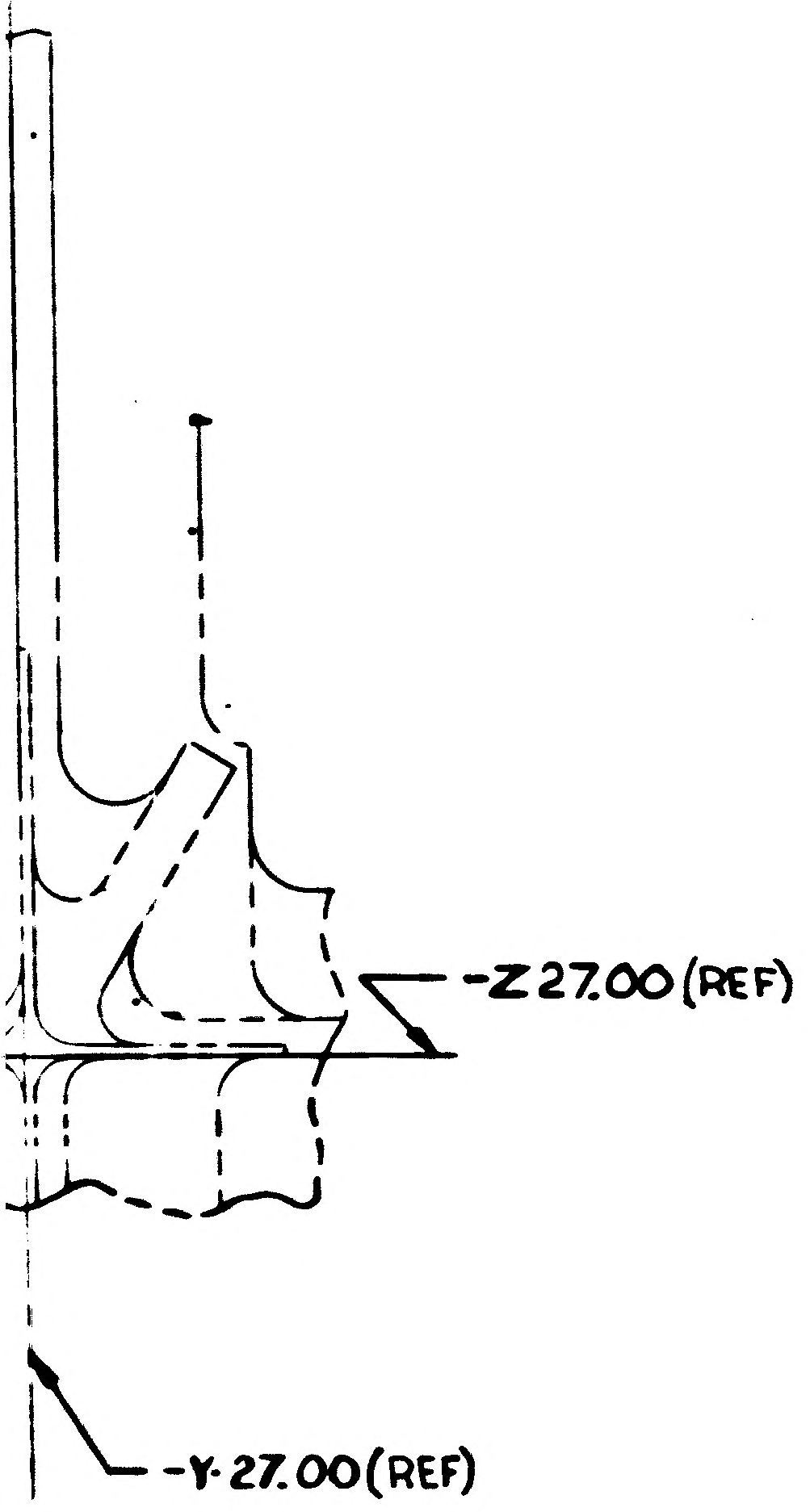
-Z27.00(REF)
-Y-27.00(REF)

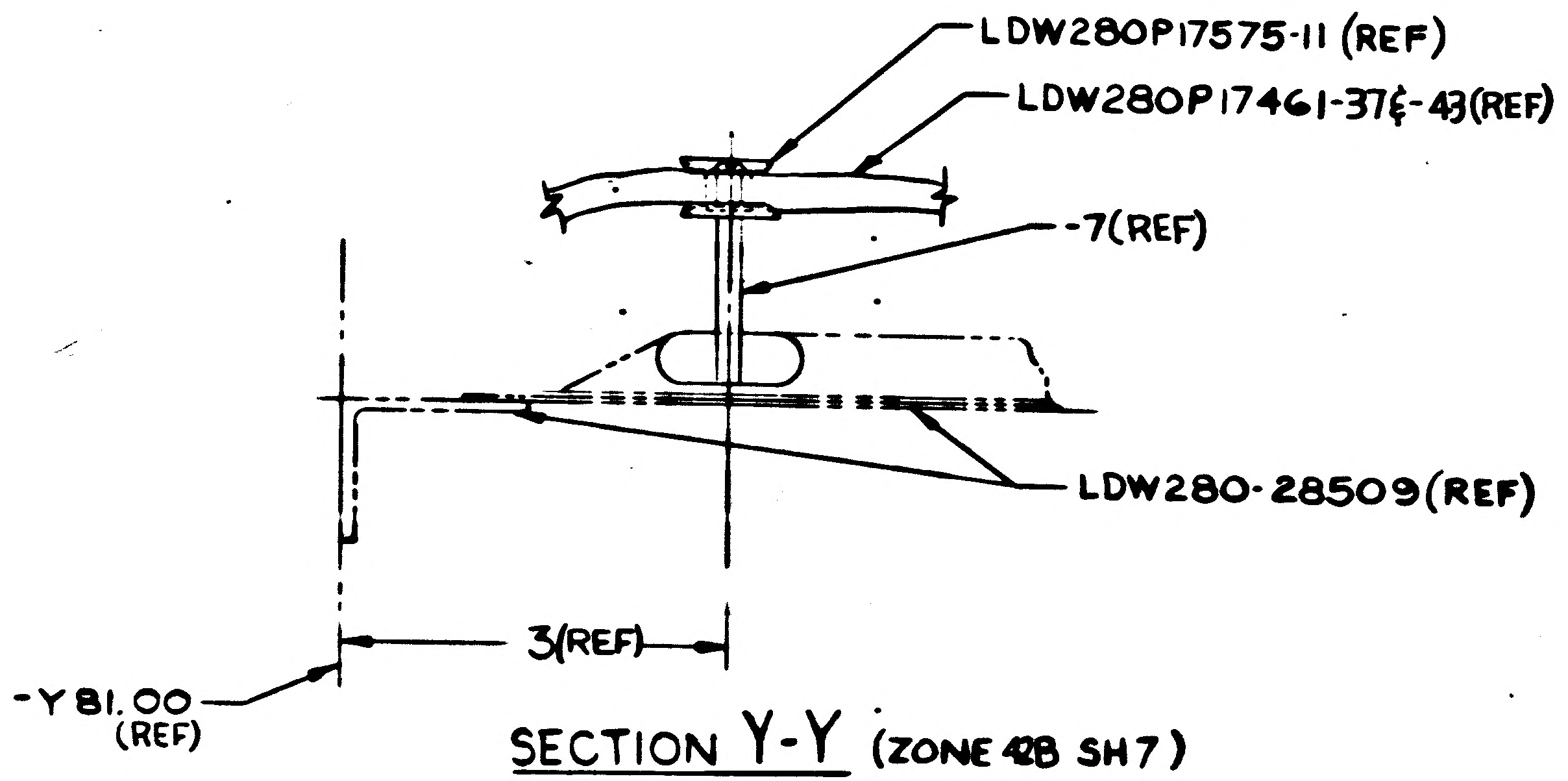
LDW280P17575-11 (REF)
LDW280P17461-37&-43(REF)
-7(REF)
LDW280-28509(REF)
3(REF)
-Y81.00
(REF)

SECTION Y-Y (ZONE 42B SH7)
NO SCALE

56

MANUFACTURING OPERATIONS
UNLESS OTHERWISE SPECIFIED
NOTES CHECKED ✓ APPLY TO THIS DWG.

NUMBER
AND ALL OTHER MARKINGS
IN REGION MARKED
USE BOTH SIDES IF NECESSARY.

FILLET AND INSIDE CORNER
RADII TOLERANCES
.016R TO .062R ± .010
.063R TO .250R ± .015
OVER .250R ± .030

DEPTH SHOWN FOR TAPPED
HOLES IS FULL THDS. 2-3 IMP THDS.
BEYOND PERMISSIBLE.

EXTERNAL THREAD LENGTH.
SHOWN INCLUDES
2 IMPERFECT THREADS MAX.

DO NOT CADMIUM PLATE & PAINT
HOLES OR SURFACES MARKED
WITH DOUBLE ASTERISK.

MISMATCH STEP OF ± .005
PERMISSIBLE DUE TO CHANGE
OF CUTTERS AT INSIDE
INTERSECTING SURFACES.

DIAMETERS MARKED
MUST BE CONCENTRIC WITHIN
FULL INDICATOR
READING

HOLES MUST BE KEPT FREE OF
CHROME PLATING SOLUTION.

ALL DIMENSIONS SHOWN TO BE MET
AFTER CADMIUM PLATING.
THICKNESS OF PLATE .0003 MIN.
TO .0005 MAX. MIN. THICKNESS TO
BE .0002 ON THREADED AREAS.
NO ALLOWANCE FOR PLATING IN
HOLES

125 √ SURFACE ROUGHNESS
INCLUDING REAMED HOLES
PER MIL-STD-10

200 √ FOR ALL DRILLED HOLES

REMOVE ALL BURRS.
BREAK ALL EDGES .005-.010

INSPECTION INFORMATION
MINIMUM PERMISSIBLE
AVERAGE EDGE DISTANCE
MARKED . IS

SYMBOL ƒ DENOTES SURFACE
TO BE MACHINED

UNLESS OTHERWISE SPECIFIED
TOLERANCE ON FLANGES IS ± 1/32

LENGTHS OF AN, NAS & MS AL ALY
RIVETS SHORTER THAN 1 INCH ARE
NOT SPECIFIED.

TOLERANCE ON LOFTED
DELINEATIONS IS

DWG SIZE 34 X 106
PRINTING INFO ONLY
FULL SIZE SHEET AREA (36 X (C 5)
PRINT TRIM LINE

C
B
A

LDW280-51657A
LDW280-51657A

03/03 NAS 9-1100

LDW280-51657 SH 7

GRUMMAN AIRCRAFT ENGRG CORP., BETHPAGE, L. I., NEW YORK

LM	SIZE J	CODE IDENT NO. 26512	LDW280- 51657	A
MODEL OR END ITEM	SCALE FULL & NOTED		SHEET 7.00	

FOR PHOTO 32 REPRODUCTION

THIS IS AN ORIGINAL DWG 3FR

36 35 34 33

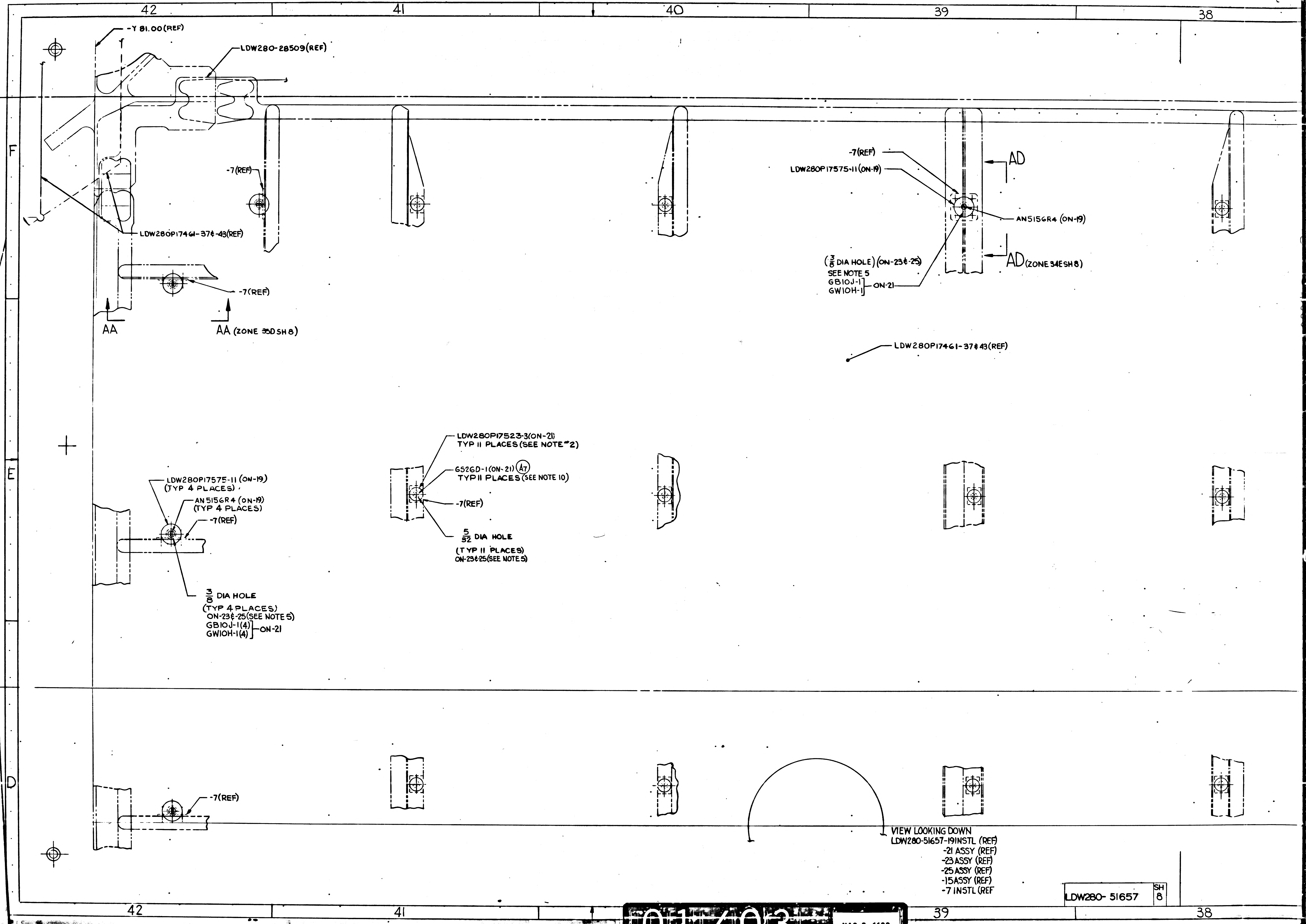
42
41
40
39
38
F
E
D
-Y 81.00(REF)
LDW280-28509(REF)
-7(REF)
LDW280P17461-37&-43(REF)
-7(REF)
AA
AA (ZONE 35D SH 8)
-7(REF)
LDW280P17575-11(ON-19)
AD
AN5156R4 (ON-19)
($\frac{3}{8}$ DIA HOLE) (ON-23&-25)
SEE NOTE 5
GB10J-1
GW10H-1
ON-21
AD(ZONE 34E SH 8)
LDW280P17461-37&43(REF)
LDW280P17523-3(ON-21)
TYP 11 PLACES (SEE NOTE #2)
G52GD-1(ON-21) A7
TYP 11 PLACES (SEE NOTE 10)
-7(REF)
$\frac{5}{32}$ DIA HOLE
(TYP 11 PLACES)
ON-23&25(SEE NOTE 5)
LDW280P17575-11 (ON-19)
(TYP 4 PLACES)
AN5156R4 (ON-19)
(TYP 4 PLACES)
-7(REF)
$\frac{3}{8}$ DIA HOLE
(TYP 4 PLACES)
ON-23&-25(SEE NOTE 5)
GB10J-1(4)
GW10H-1(4)
ON-21
-7(REF)
VIEW LOOKING DOWN
LDW280-51657-19 INSTL (REF)
-21 ASSY (REF)
-23 ASSY (REF)
-25 ASSY (REF)
-15 ASSY (REF)
-7 INSTL (REF
LDW280- 51657
SH 8

01/03 NAS 9-1100

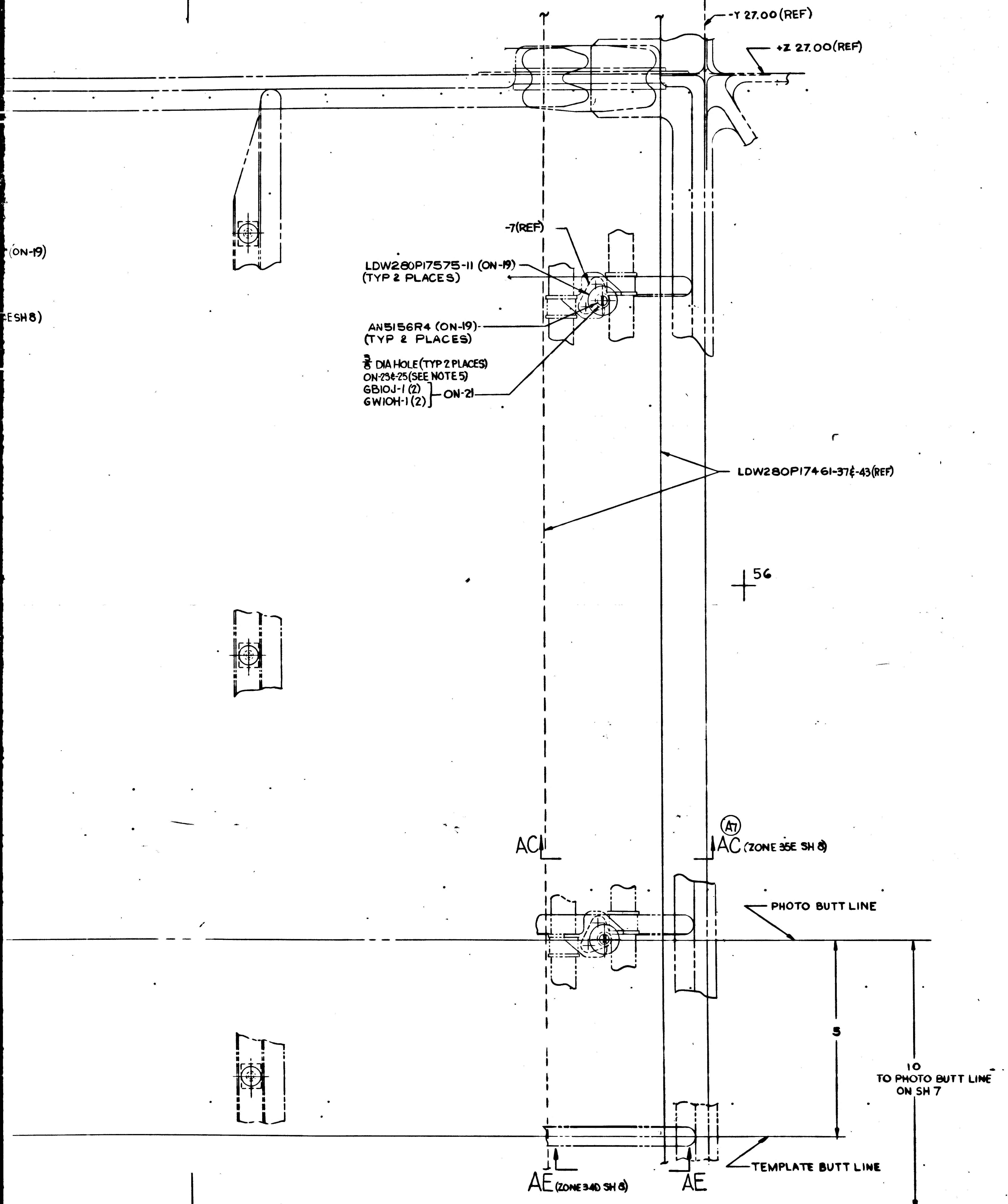
-Y 27.00 (REF)
+Z 27.00 (REF)
(ON-19)
E SH8)
-7(REF)
LDW280P17575-11 (ON-19)
(TYP 2 PLACES)
AN5156R4 (ON-19)
(TYP 2 PLACES)
3/8 DIA HOLE (TYP 2 PLACES)
ON-25&-25 (SEE NOTE 5)
GB10J-1 (2)
GW10H-1 (2)
ON-21
LDW280P17461-37&-43(REF)
56
AC
AC (ZONE 35E SH 8)
A7
PHOTO BUTT LINE
5
10
TO PHOTO BUTT LINE
ON SH 7
TEMPLATE BUTT LINE
AE (ZONE 34D SH 8)
AE

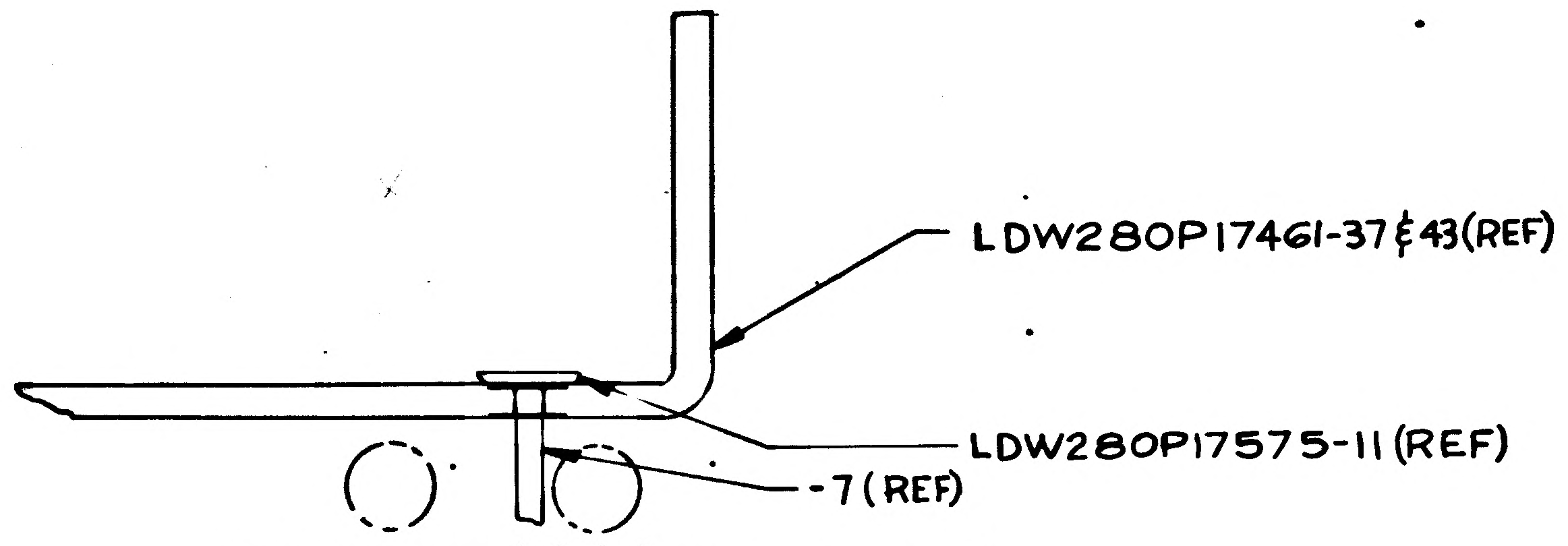
LDW280P17461-37&43(REF)
LDW280P17575-11(REF)
-7 (REF)
A7

SECTION AC-AC (ZONE 31D SH 8)
NO SCALE

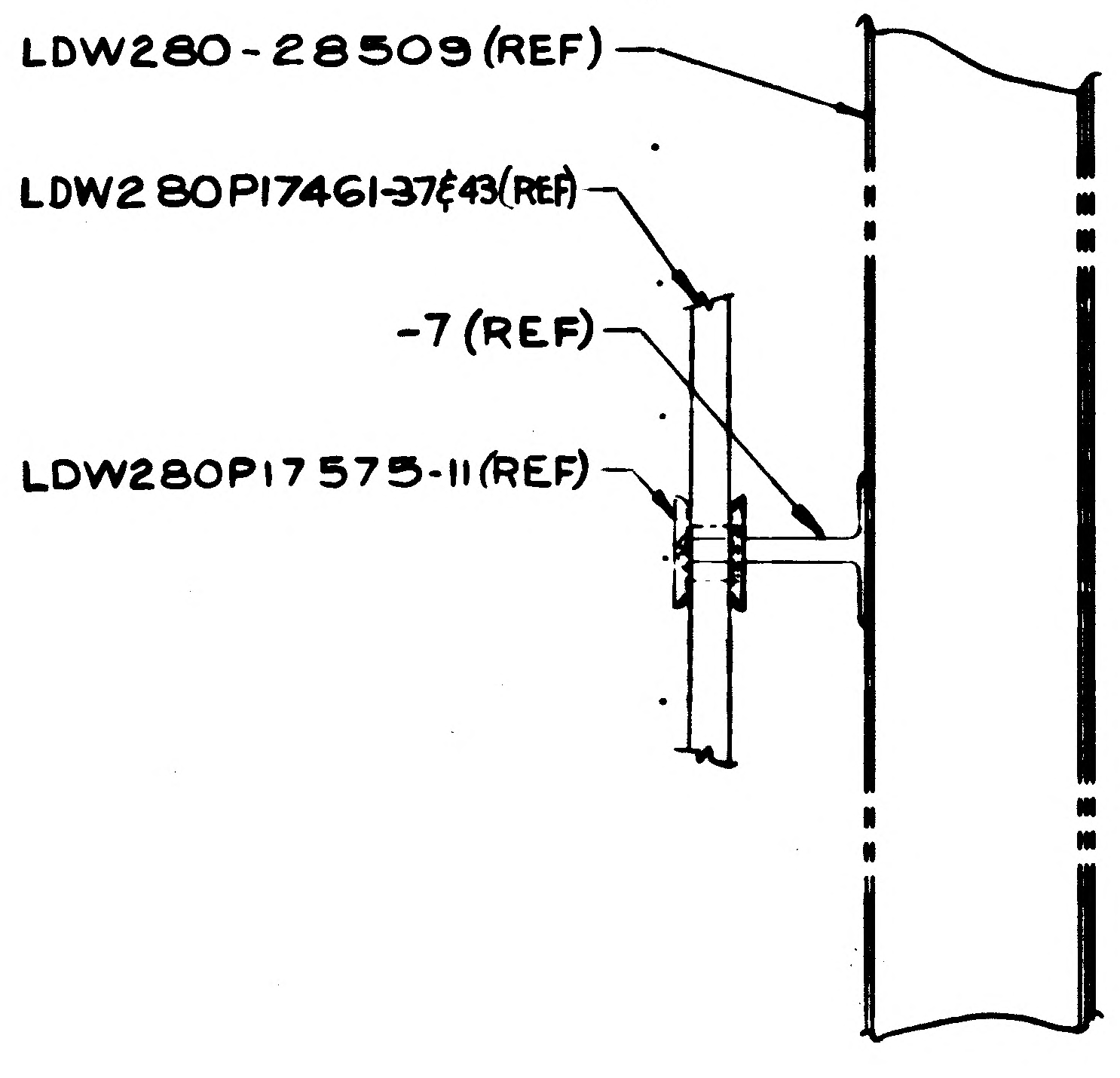
LDW280-28509 (REF)
LDW280P17461-37&43(REF)
-7 (REF)
LDW280P17575-11(REF)

SECTION AD-AD (ZONE 37D SH8)
NO SCALE

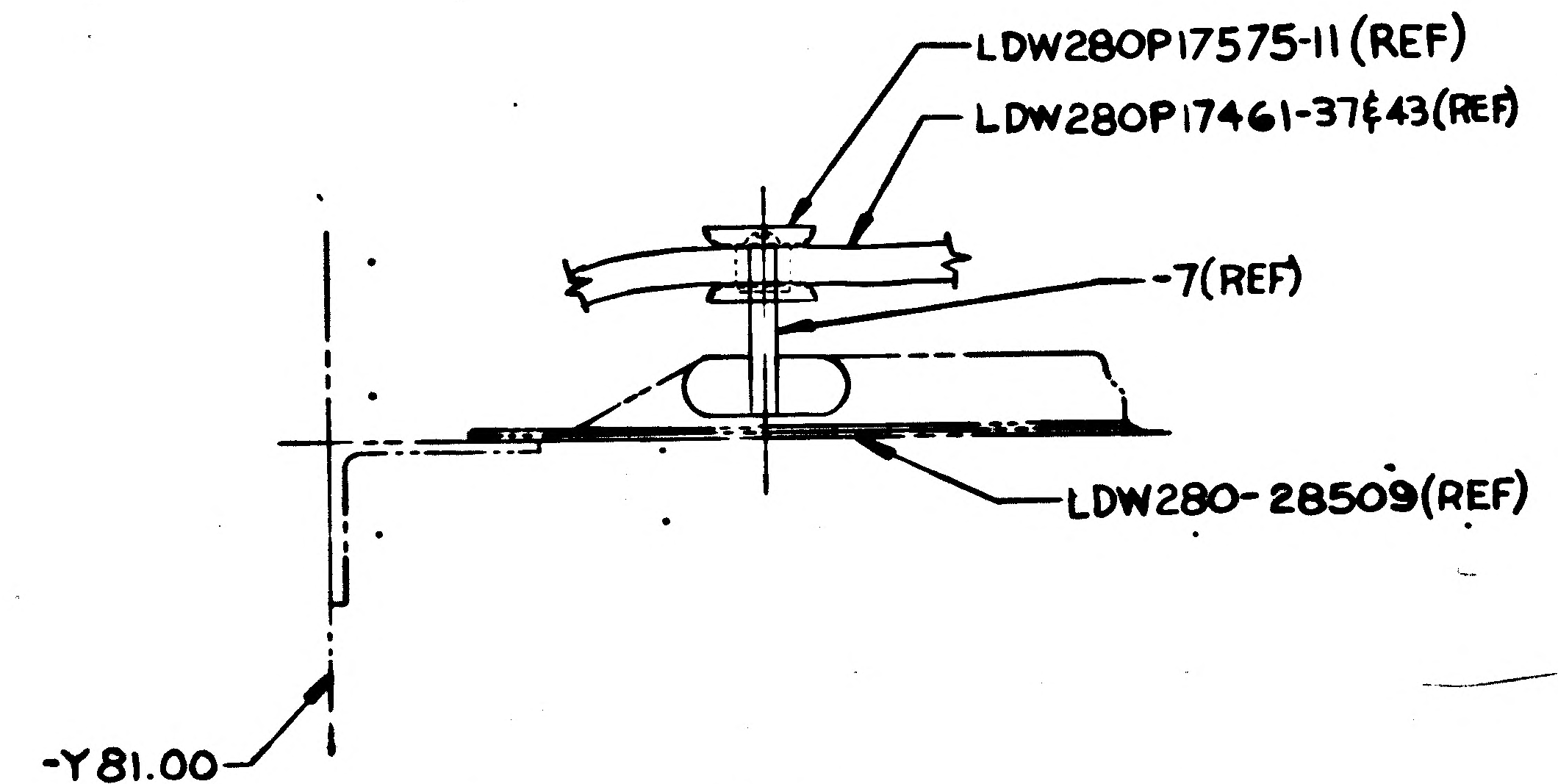
LDW280P17575-11 (REF)
LDW280P17461-37&43(REF)
-7(REF)
LDW280-28509(REF)
-Y 81.00
(REF)

SECTION AA-AA (ZONE 42E SH 8)
NO SCALE

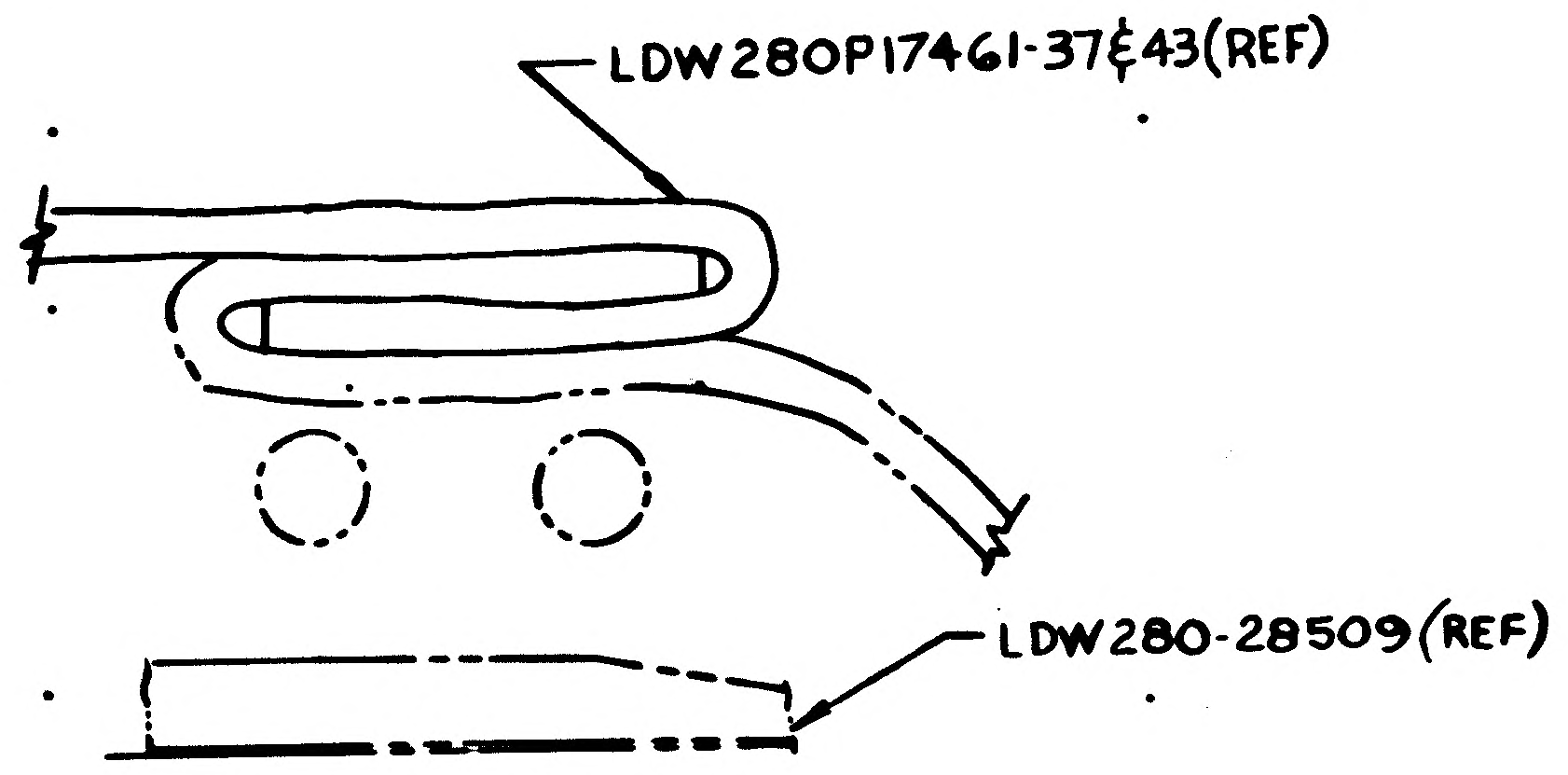
LDW280P17461-37&43(REF)
LDW280-28509(REF)

SECTION AE-AE (ZONE 37D SH8)
NO SCALE

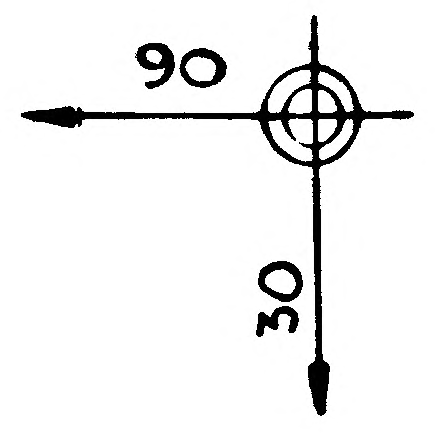

36 35 34 33 32

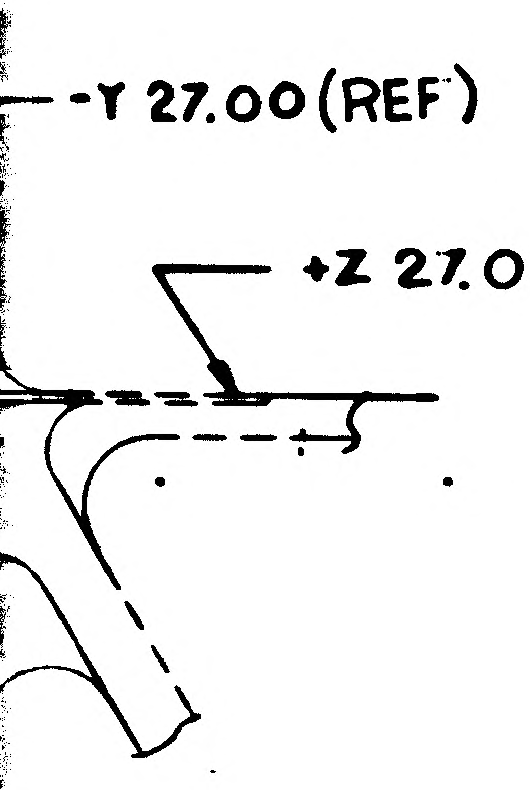
-Y 27.00 (REF)
+Z 27.00 (REF)

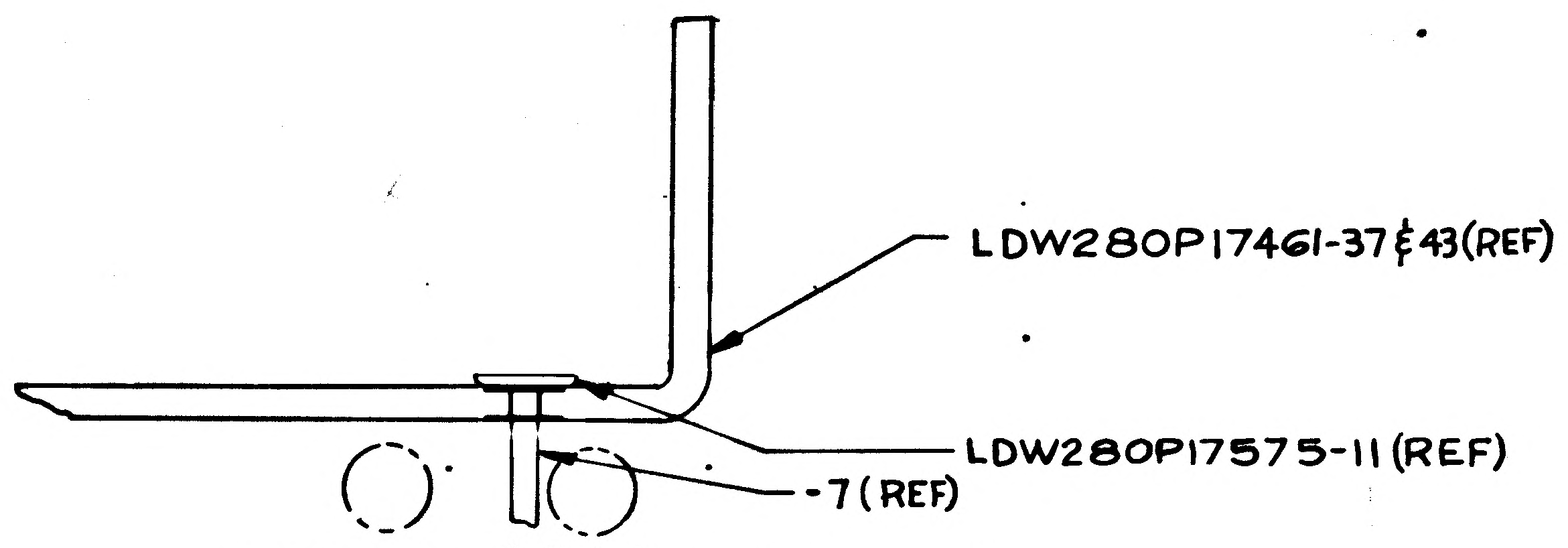
LDW280P17461-37 & 43 (REF)
LDW280P17575-11 (REF)
-7 (REF)

SECTION AC-AC (ZONE 31D SH 8)
NO SCALE
(A7)

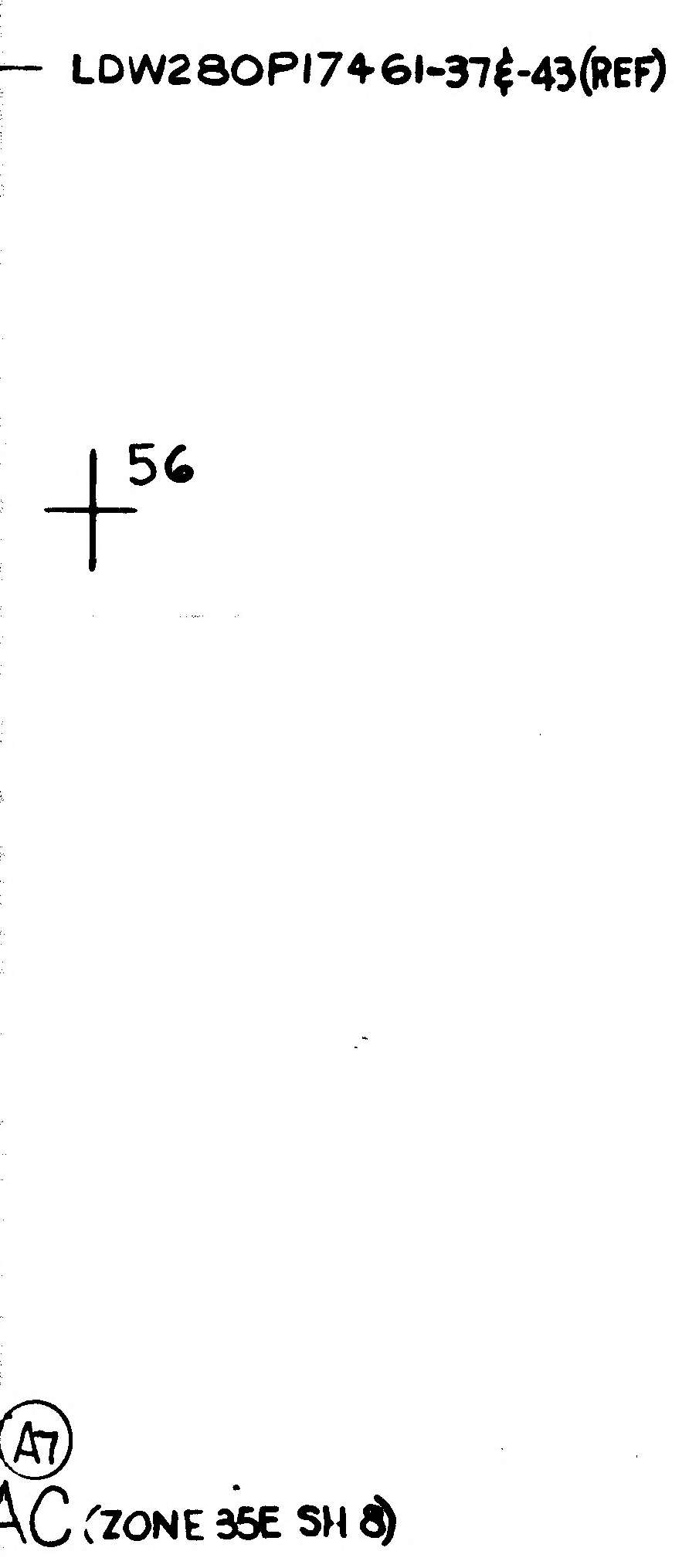
LDW280P17461-37 & 43 (REF)
56
(A7)
AC (ZONE 35E SH 8)

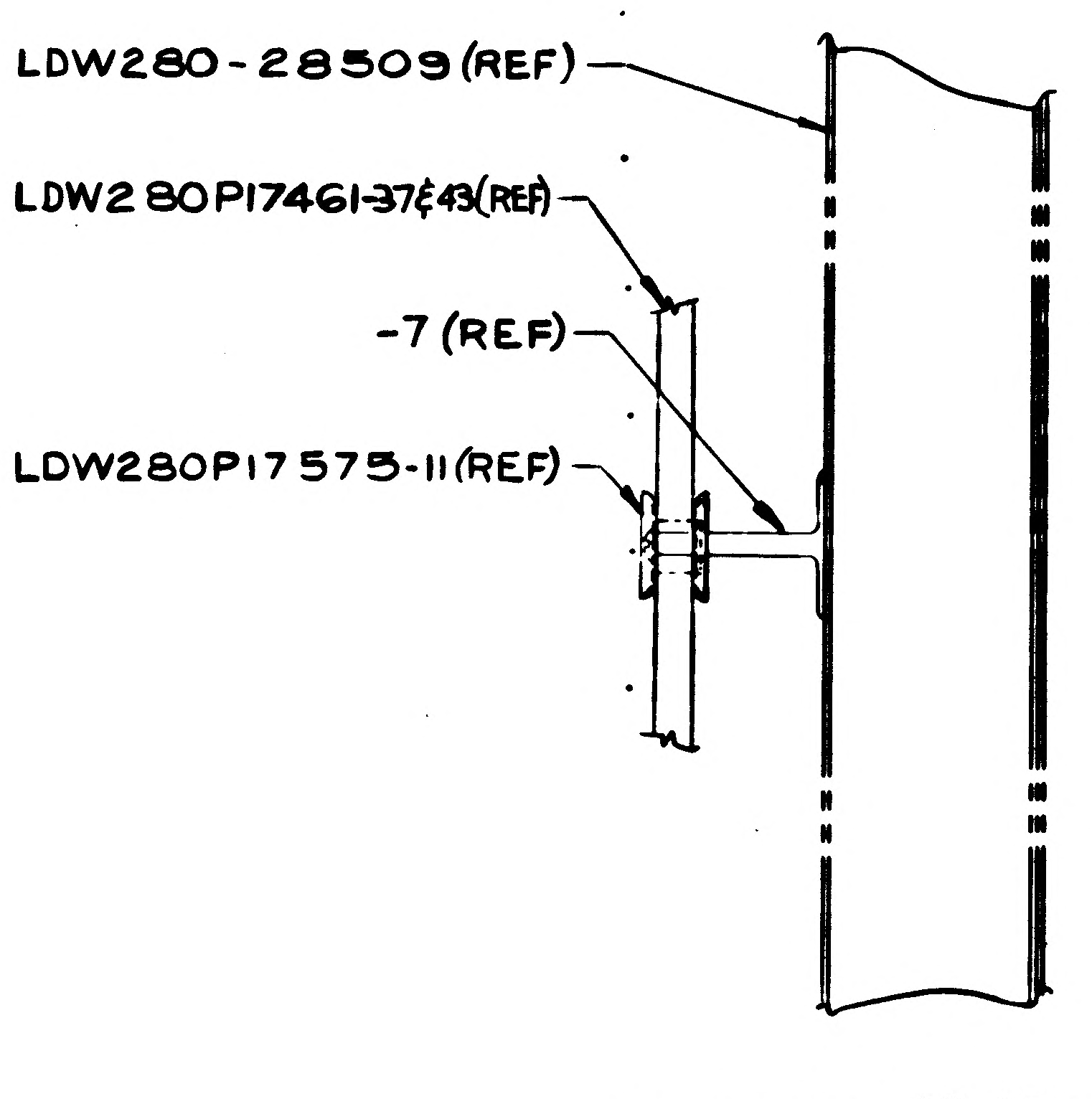
LDW280-28509 (REF)
LDW280P17461-37 & 43 (REF)
-7 (REF)
LDW280P17575-11 (REF)

SECTION AD-AD (ZONE 37D SH 8)
NO SCALE

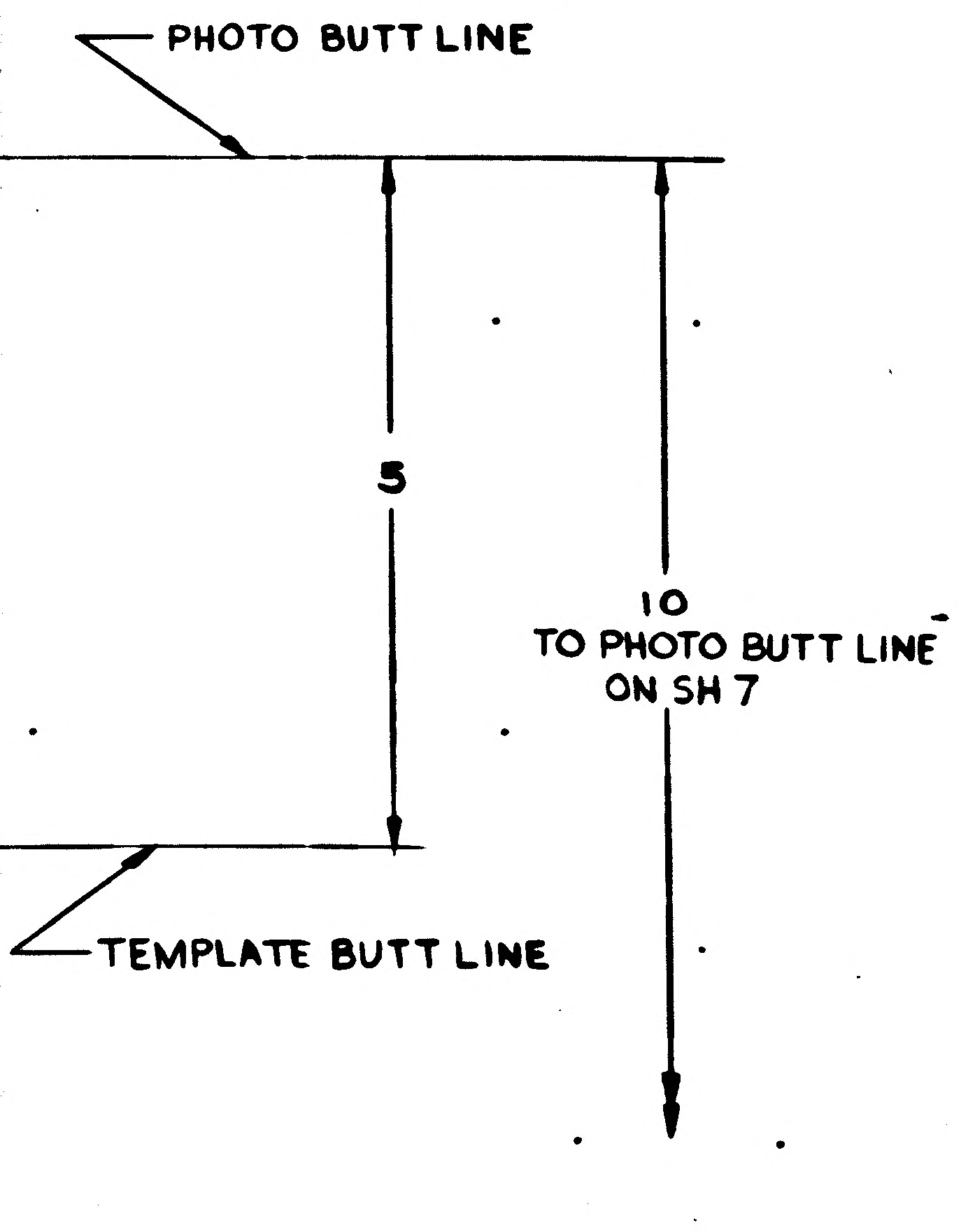
PHOTO BUTT LINE
5
10
TO PHOTO BUTT LINE
ON SH 7
TEMPLATE BUTT LINE

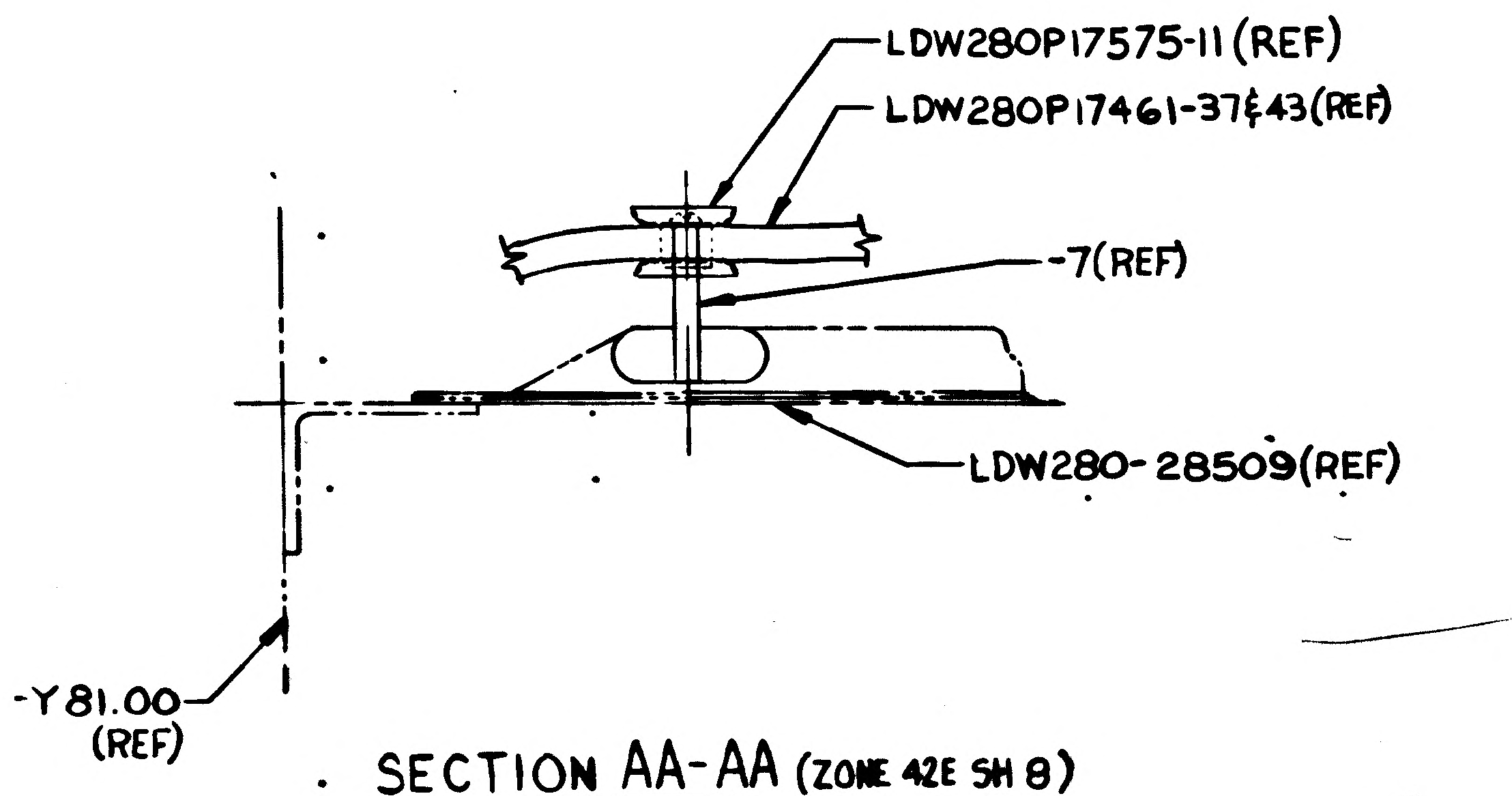
LDW280P17575-11 (REF)
LDW280P17461-37 & 43 (REF)
-7 (REF)
LDW280-28509 (REF)
-Y 81.00
(REF)

SECTION AA-AA (ZONE 42E SH 8)
NO SCALE

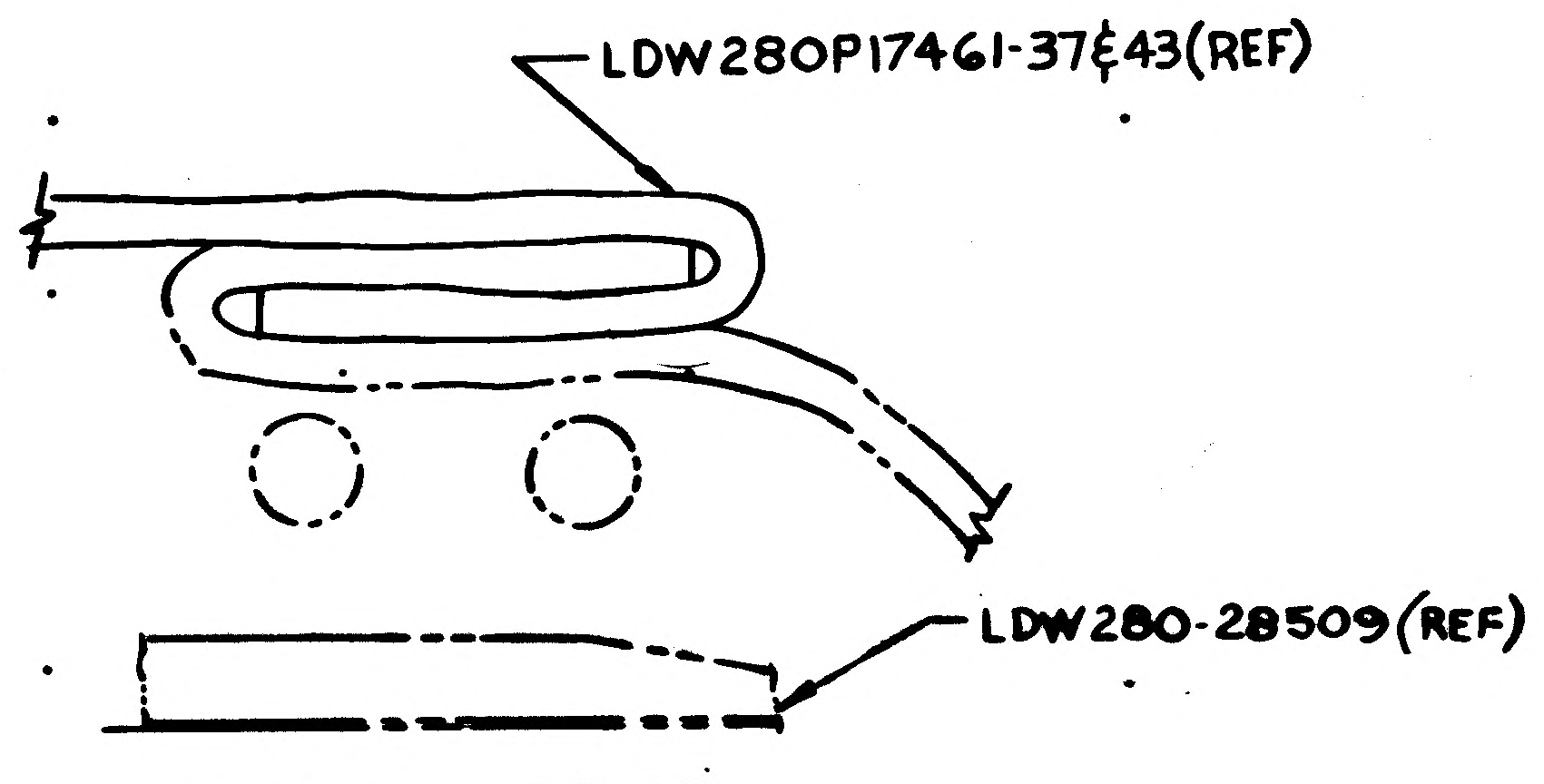
LDW280P17461-37 & 43 (REF)
LDW280-28509 (REF)

SECTION AE-AE (ZONE 37D SH 8)
NO SCALE

03/03 NAS 9-1100

MANUFACTURING OPERATIONS
UNLESS OTHERWISE SPECIFIED
NOTES CHECKED √ APPLY TO THIS DWG.

PART NUMBER AND ALL OTHER MARKINGS IN REGION MARKED ☒ USE BOTH SIDES IF NECESSARY.
FILLET AND INSIDE CORNER RADII TOLERANCES .016R TO .062R ± .010 .062R TO .250R ± .015 OVER .250R ± .030
DEPTH SHOWN FOR TAPPED HOLES IS FULL THDS. 2-3 IMP THDS. BEYOND PERMISSIBLE.
EXTERNAL THREAD LENGTH SHOWN INCLUDES 2 IMPERFECT THREADS MAX.
DO NOT CADMIUM PLATE & PAINT HOLES OR SURFACES MARKED WITH DOUBLE ASTERISK.
MISMATCH STEP OF ± .005 PERMISSIBLE DUE TO CHANGE OF CUTTERS AT INSIDE INTERSECTING SURFACES.
DIAMETERS MARKED MUST BE CONCENTRIC WITHIN FULL INDICATOR READING
HOLES MUST BE KEPT FREE OF CHROME PLATING SOLUTION.
ALL DIMENSIONS SHOWN TO BE MET AFTER CADMIUM PLATING. THICKNESS OF PLATE .0003 MIN. TO .0005 MAX. MIN. THICKNESS TO BE .0002 ON THREADED AREAS. NO ALLOWANCE FOR PLATING IN HOLES
125 √ SURFACE ROUGHNESS INCLUDING REAMED HOLES PER MIL-STD-10
250 √ FOR ALL DRILLED HOLES
REMOVE ALL BURRS. BREAK ALL EDGES .015-.030
INSPECTION INFORMATION MINIMUM PERMISSIBLE AVERAGE EDGE DISTANCE MARKED IS
SYMBOL ƒ DENOTES SURFACE TO BE MACHINED
UNLESS OTHERWISE SPECIFIED TOLERANCE ON FLANGES IS ± 1/32
LENGTHS OF AN, NAS & MS AL ALY RIVETS SHORTER THAN 1 INCH ARE NOT SPECIFIED.
TOLERANCE ON LOFTED DELINEATIONS IS

DWG SIZE 34 X 106

PRINTING INFO ONLY
FULL SIZE SHEET AREA (36 X 108)- 27 SQ. FT.
SIZE SHEET AREA (1/4 OF FULL)- 6.75 SQ. FT.
PRINT TRIM LINE

F
E
D

LDW280-51657A
LDW280-51657A

	GRUMMAN AIRCRAFT ENGRG CORP., BETHPAGE, L. I., NEW YORK			
LM	SIZE J	CODE IDENT NO. 26512	LDW280-51657	A
MODEL OR END ITEM	SCALE FULL (NOTED)		SHEET 8.00	

LDW280-51657 SH 8

FOR PHOTO 32 REPRODUCTION

THIS IS AN ORIGINAL DWG 3FR

66-D3

36 35 34 33

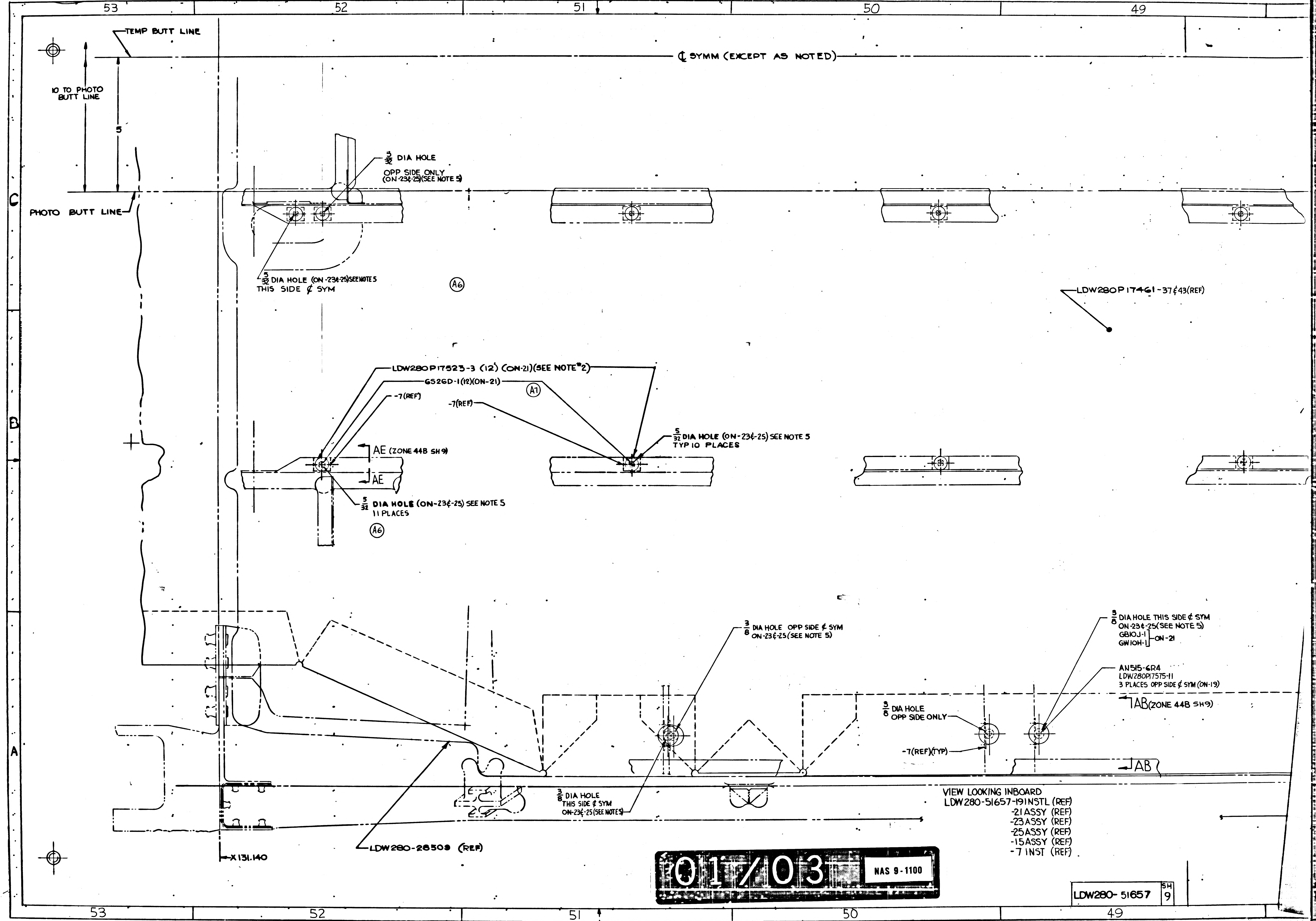
53
52
51
50
49
C
B
A
TEMP BUTT LINE
℄ SYMM (EXCEPT AS NOTED)
10 TO PHOTO BUTT LINE
5
PHOTO BUTT LINE
5/32 DIA HOLE
OPP SIDE ONLY (ON-23&-25)(SEE NOTE 5)
5/32 DIA HOLE (ON-23&-25)SEE NOTE 5
THIS SIDE ℄ SYM
A6
LDW280P17461-37&43(REF)
LDW280P17523-3 (12) (ON-21)(SEE NOTE #2)
GS26D-1(12)(ON-21)
A7
-7(REF)
-7(REF)
5/32 DIA HOLE (ON-23&-25) SEE NOTE 5
TYP 10 PLACES
AE (ZONE 44B SH9)
AE
5/32 DIA HOLE (ON-23&-25) SEE NOTE 5
11 PLACES
A6
3/8 DIA HOLE OPP SIDE ℄ SYM
ON-23&-25(SEE NOTE 5)
3/8 DIA HOLE THIS SIDE ℄ SYM
ON-23&-25(SEE NOTE 5)
GB10J-1
GW10H-1
ON-21
AN515-6R4
LDW280P17575-11
3 PLACES OPP SIDE ℄ SYM (ON-19)
AB(ZONE 44B SH9)
3/8 DIA HOLE
OPP SIDE ONLY
-7(REF)(TYP)
AB
3/8 DIA HOLE
THIS SIDE ℄ SYM
ON-23&-25(SEE NOTES)
LDW280-28509 (REF)
X131.140

VIEW LOOKING INBOARD
LDW280-51657-19 INSTL (REF)
-21 ASSY (REF)
-23 ASSY (REF)
-25 ASSY (REF)
-15 ASSY (REF)
-7 INST (REF)

01/03 NAS 9-1100

LDW280-51657 SH 9

49
48
47
46
45
44
TEMP BUTT LINE
10 TO PHOTO BUTT LINE
5
90
30
PHOTO BUTT LINE
LDW280P17461-37&43(REF)
72
LDW280P17461-37&
LDW280P17575-11(REF)
AN515-6R4 (REF)
A7
SECTION AB-AB
(NO SCALE)
LDW280P17461-37&-43(REF)
-7(REF
LDW280P17523-3(REF)
GS26D-1(REF)
A1
SECTION AE-AE
NO SCALE
3/8 DIA HOLE THIS SIDE ¢ SYM ON-23&-25(SEE NOTE 5)
GB10J-1 } ON-21
GW10H-1
AN515-6R4
LDW280P17575-11
3 PLACES OPP SIDE ¢ SYM (ON-19)
AB(ZONE 44B SH9)
AB
3/8 DIA HOLE THIS SIDE ¢ SYM ON-23&-25(SEE NOTE 5)
AN515-6R4(ON-19)
LDW280P17575-11(ON-19)
3 PLACES OPP SIDE ¢ SYM
3/8 DIA HOLE OPP SIDE ONLY ON-23&-25 (SEE NOTE 5)
GB10J-1 } 3 PLACES OPP SIDE
GW10H-1 } ¢ SYM ON-21
X196.00 (REF)
Z27.00(REF)
EF)
EF)
EF)
EF)
EF)
EF)
LDW280-51657 SH 9
LDW280-51657 SH 9

02703 NAS 9-1100

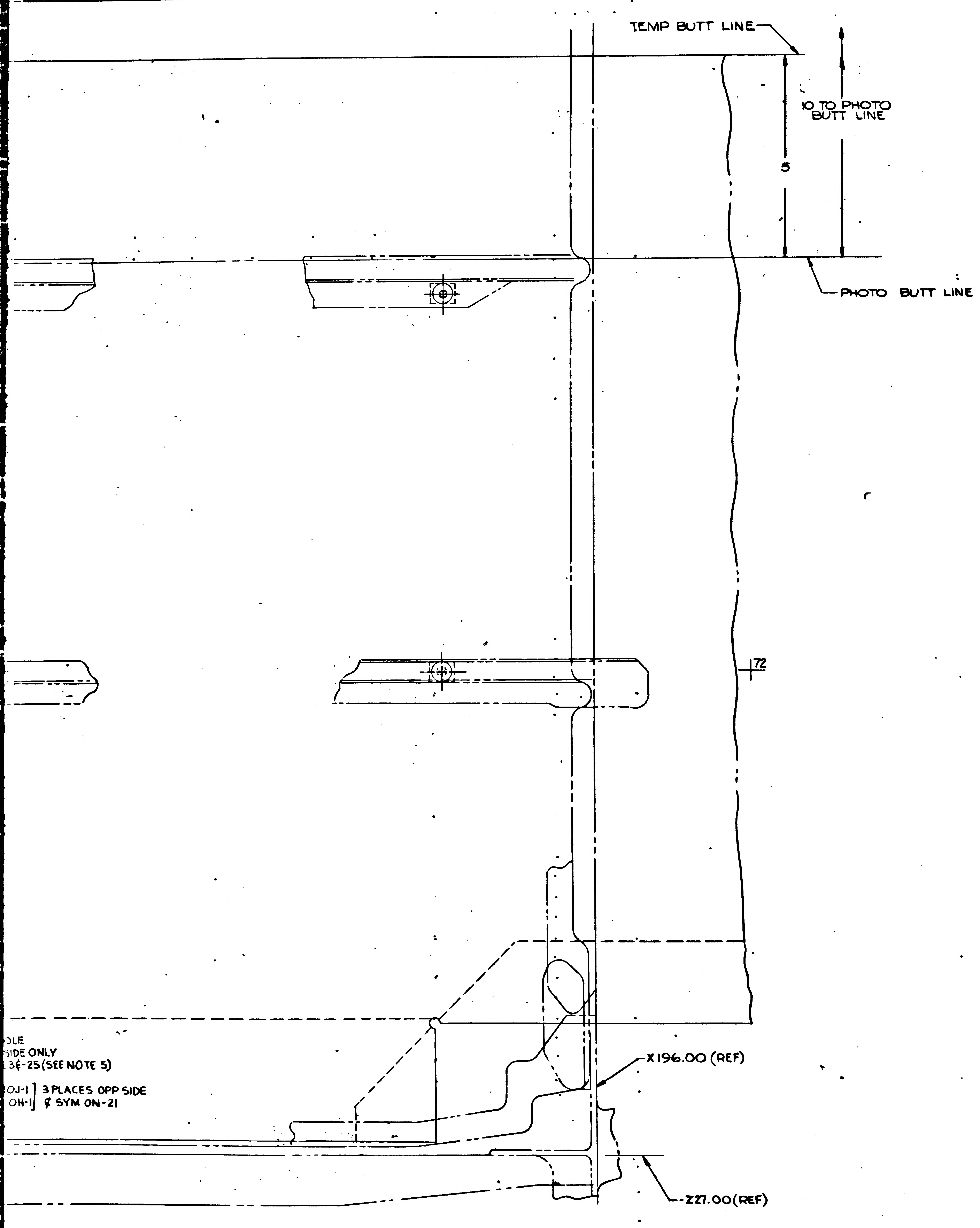
TEMP BUTT LINE
10 TO PHOTO BUTT LINE
5
PHOTO BUTT LINE
72
OLE
SIDE ONLY
3& -25(SEE NOTE 5)
OJ-1
OH-1
3 PLACES OPP SIDE
℄ SYM ON-21
X196.00 (REF)
Z27.00(REF)

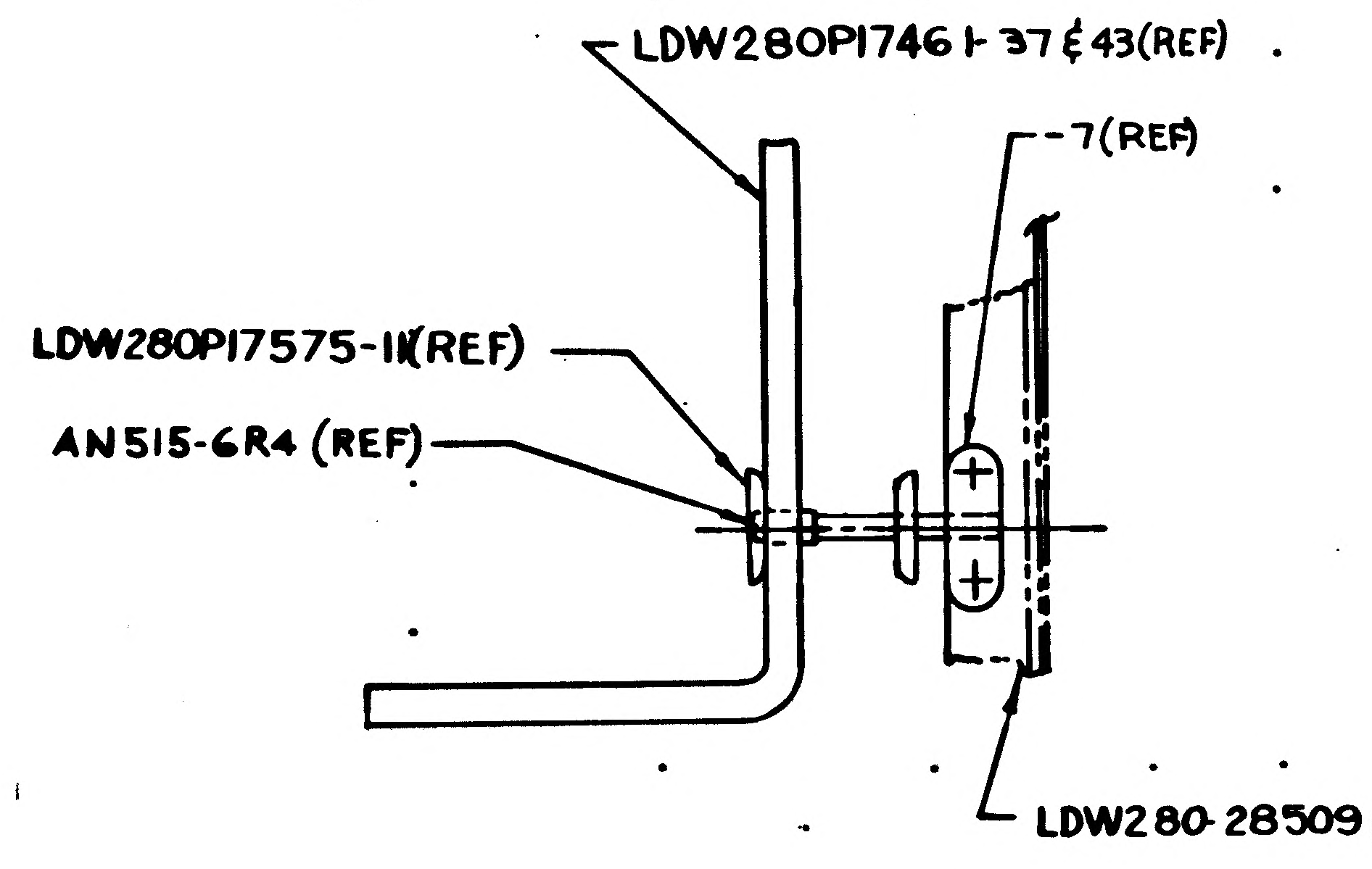
LDW280P17461-37 & 43(REF)
-7(REF)
LDW280P17575-11(REF)
AN515-6R4 (REF)
LDW280-28509 (REF)

(A7)

SECTION AB-AB (ZONE 49A SH9)
(NO SCALE)

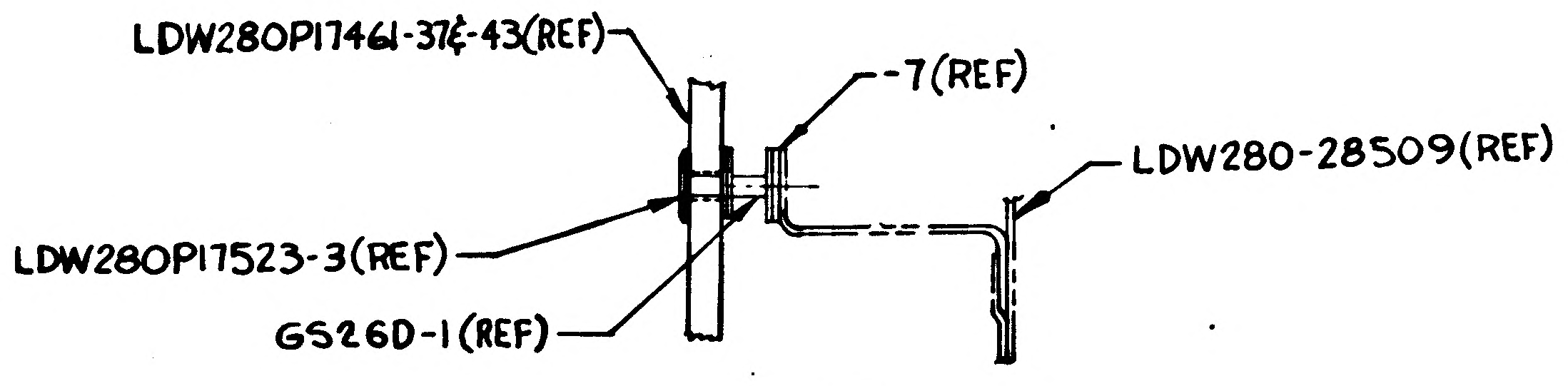
LDW280P17461-37&-43(REF)
-7(REF)
LDW280-28509(REF)
LDW280P17523-3(REF)
GS26D-1(REF)

(A7)

SECTION AE-AE (ZONE 52B SH9)
NO SCALE

MANUFACTURING OPERATIONS

~~UNLESS OTHERWISE SPECIFIED NOTES CHECKED ✓ APPLY TO THIS DWG.~~

~~PART NUMBER AND ALL OTHER MARKINGS IN REGION MARKED ⊠ USE BOTH SIDES IF NECESSARY.~~

~~FILLET AND INSIDE CORNER RADII TOLERANCES~~
~~.016R TO .062R ± .010~~
~~.063R TO .250R ± .015~~
~~OVER .250R ± .030~~

~~DEPTH SHOWN FOR TAPPED HOLES IS FULL THDS. 2-3 IMP THDS. BEYOND PERMISSIBLE.~~

~~EXTERNAL THREAD LENGTH SHOWN INCLUDES 2 IMPERFECT THREADS MAX.~~

~~DO NOT CADMIUM PLATE & PAINT HOLES OR SURFACES MARKED WITH DOUBLE ASTERISK.~~

~~MISMATCH STEP OF ± .005 PERMISSIBLE DUE TO CHANGE OF CUTTERS AT INSIDE INTERSECTING SURFACES.~~

~~DIAMETERS MARKED MUST BE CONCENTRIC WITHIN FULL INDICATOR READING~~

~~HOLES MUST BE KEPT FREE OF CHROME PLATING SOLUTION.~~

~~ALL DIMENSIONS SHOWN TO BE MET AFTER CADMIUM PLATING. THICKNESS OF PLATE .0003 MIN. TO .0005 MAX. MIN. THICKNESS TO BE .0002 ON THREADED AREAS. NO ALLOWANCE FOR PLATING IN HOLES~~

~~125 SURFACE ROUGHNESS INCLUDING REAMED HOLES PER MIL-STD-10~~

~~250 FOR ALL DRILLED HOLES~~

~~REMOVE ALL BURRS. BREAK ALL EDGES .005-.030~~

~~INSPECTION INFORMATION MINIMUM PERMISSIBLE AVERAGE EDGE DISTANCE MARKED IS~~

~~SYMBOL ƒ DENOTES SURFACE TO BE MACHINED~~

~~UNLESS OTHERWISE SPECIFIED TOLERANCE ON FLANGES IS ± 1/32~~

~~LENGTHS OF AN, NAS & MS AL ALY RIVETS SHORTER THAN 1 INCH ARE NOT SPECIFIED.~~

~~TOLERANCE ON LOFTED DELINEATIONS IS~~

DWG SIZE 34 X106
PRINTING
FULL SIZE SHEET
PRINT TRIM LINE

C
B
A

LDW280-51657A

LDW280-51657A

03/03 NAS 9-1100

12-53

LDW280- 51657	SH 9

GRUMMAN AIRCRAFT ENGRG CORP., BETHPAGE, L. I., NEW YORK

	SIZE	CODE IDENT NO.		
LM	J	26512	LDW280- 51657	A
MODEL OR END ITEM	SCALE FULL/NOTED		SHEET 9.00	

43 THIS IS AN ORIGINAL DRAWING 3FR

FOR PHOTO REPRODUCTION

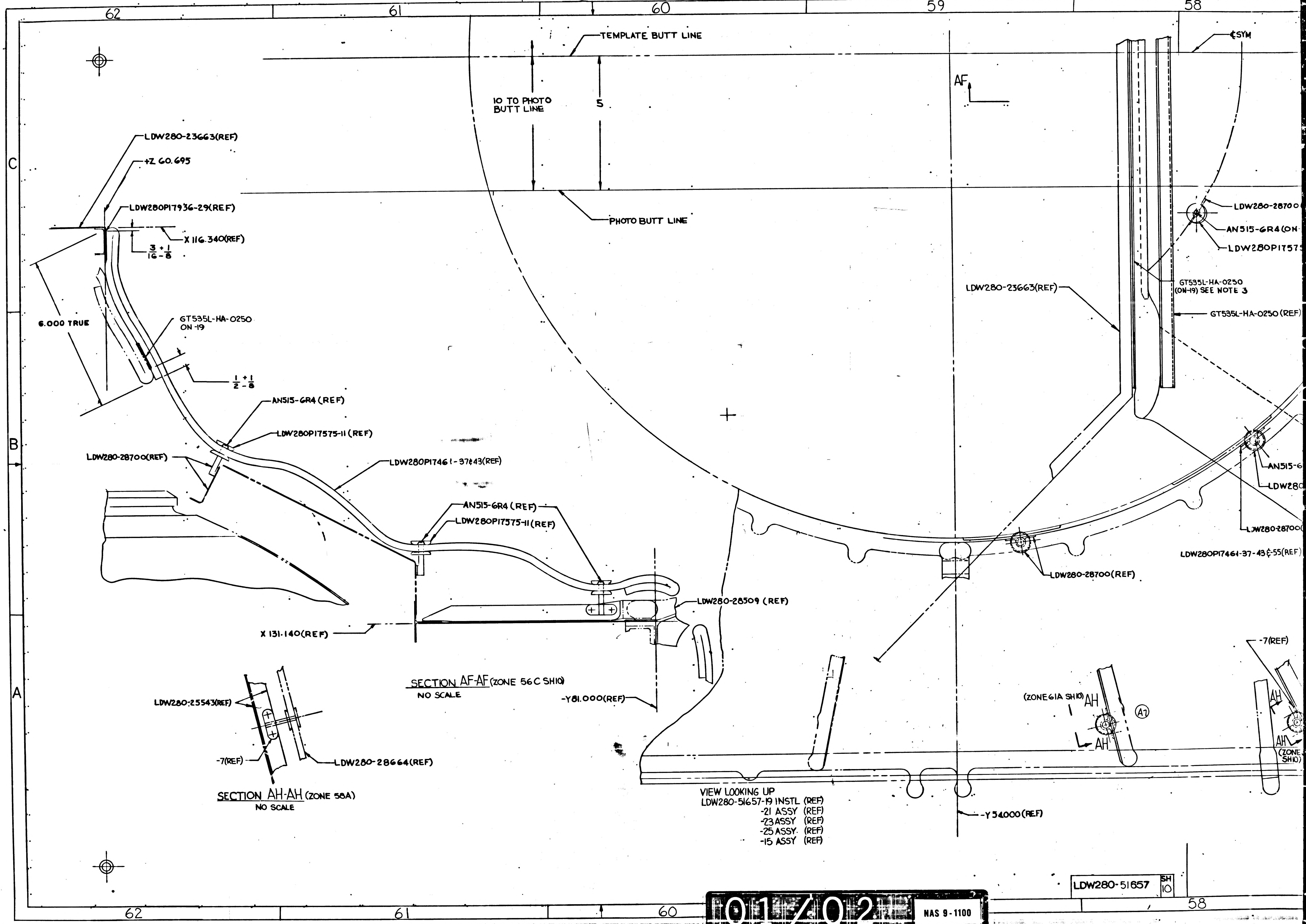
LDW280-51657 SH 10
62
61
60
59
58
C
B
A
TEMPLATE BUTT LINE
℄ SYM
10 TO PHOTO BUTT LINE
5
PHOTO BUTT LINE
AF
LDW280-23663(REF)
+Z 60.695
LDW280P17936-29(REF)
X 116.340(REF)
3/16 + 1/8 −
6.000 TRUE
GT535L-HA-0250 ON -19
1/2 + 1/8 −
AN515-6R4 (REF)
LDW280P17575-11 (REF)
LDW280-28700(REF)
LDW280P17461-37&43(REF)
AN515-6R4 (REF)
LDW280P17575-11(REF)
LDW280-28509 (REF)
X 131.140(REF)
SECTION AF-AF (ZONE 56C SH10)
NO SCALE
-Y81.000(REF)
LDW280-28700
AN515-6R4 (ON
LDW280P1757
LDW280-23663(REF)
GT535L-HA-0250 (ON-19) SEE NOTE 3
GT535L-HA-0250 (REF)
AN515-6
LDW280
LDW280-28700
LDW280P17461-37-43 & -55(REF)
LDW280-28700(REF)
-7(REF)
(ZONE 61A SH10) AH
AH
A1
AH
AH
(ZONE SH10)
LDW280-25543(REF)
-7(REF)
LDW280-28664(REF)
SECTION AH-AH (ZONE 58A)
NO SCALE
VIEW LOOKING UP
LDW280-51657-19 INSTL (REF)
-21 ASSY (REF)
-23 ASSY (REF)
-25 ASSY (REF)
-15 ASSY (REF)
-Y 54.000 (REF)
LDW280-51657 SH 10
62
61
60
58

01/02

NAS 9-1100

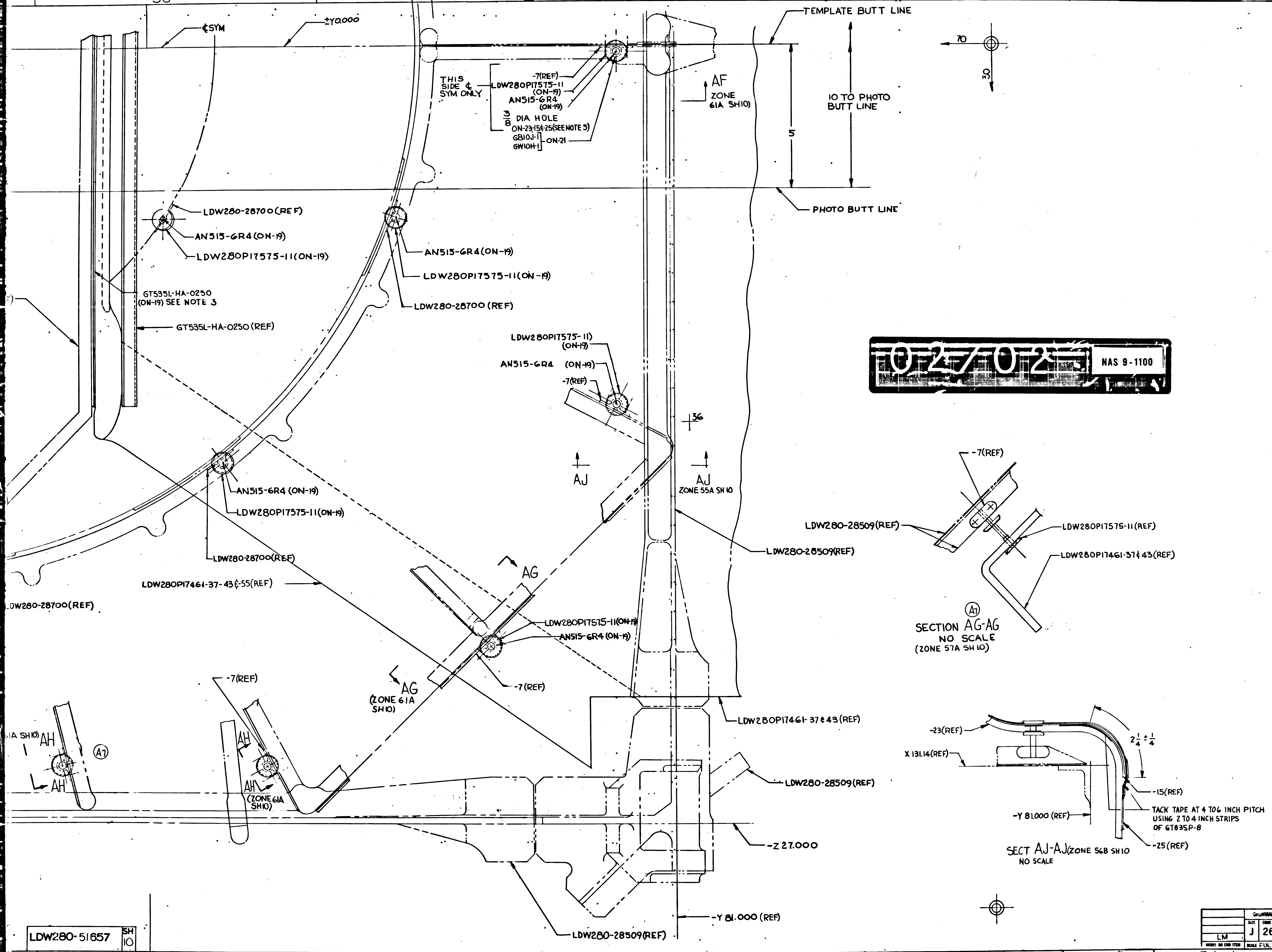
58
57
56
55
54
¢SYM
±Y0.000
TEMPLATE BUTT LINE
70
30
THIS SIDE ¢ SYM ONLY
-7(REF)
LDW280P17575-11 (ON-19)
AN515-6R4 (ON-19)
3/8 DIA HOLE
ON-23,15 & 25(SEE NOTE 5)
GB10J-1
GW10H-1
ON-21
AF
ZONE 61A SH10
10 TO PHOTO BUTT LINE
5
PHOTO BUTT LINE
C
LDW280-28700(REF)
AN515-6R4(ON-19)
LDW280P17575-11(ON-19)
GT535L-HA-0250 (ON-19) SEE NOTE 3
GT535L-HA-0250 (REF)
AN515-6R4(ON-19)
LDW280P17575-11(ON-19)
LDW280-28700(REF)
LDW280P17575-11) (ON-19)
AN515-6R4 (ON-19)
-7(REF)
36
AJ
AJ
ZONE 55A SH 10
AN515-6R4 (ON-19)
LDW280P17575-11(ON-19)
LDW280-28700(REF)
LDW280-28509(REF)
LDW280P17461-37-43 & 55(REF)
.DW280-28700(REF)
AG
LDW280P17575-11(ON-19)
AN515-6R4 (ON-19)
-7(REF)
AG
(ZONE 61A SH10)
-7(REF)
LDW280P17461-37 & 43(REF)
IA SH10) AH
AH
A7
AH
AH
AH
(ZONE 61A SH10)
LDW280-28509(REF)
-Z 27.000
-Y 81.000 (REF)
LDW280-28509(REF)
LDW280-51657
SH 10
-7(REF)
LDW280-28509(REF)
LDW280P17575-11(REF)
LDW280P17461-37 & 43(REF)
A7
SECTION AG-AG
NO SCALE
(ZONE 57A SH 10)
B
-23(REF)
X 131.14(REF)
2 1/4 ± 1/4
-15(REF)
TACK TAPE AT 4 TO 6 INCH PITCH USING 2 TO 4 INCH STRIPS OF GT83SP-8
-Y 81.000 (REF)
-25(REF)
SECT AJ-AJ(ZONE 56B SH 10
NO SCALE
A
LDW280-51657A
LDW280-51657A

02702 NAS 9-1100

MANUFACTURING OPERATIONS

UNLESS OTHERWISE SPECIFIED NOTES CHECKED ✓ APPLY TO THIS DWG.

PART NUMBER AND ALL OTHER MARKINGS IN REGION MARKED ☒ USE BOTH SIDES IF NECESSARY.

FILLET AND INSIDE CORNER RADII TOLERANCES
.015R TO .062R ± .000
.063R TO .250R ± .015
OVER .250R ± .030

DEPTH SHOWN FOR TAPPED HOLES IS FULL THDS. 2-3 IMP THDS. BEYOND PERMISSIBLE.

EXTERNAL THREAD LENGTH SHOWN INCLUDES 2 IMPERFECT THREADS MAX.

DO NOT CADMIUM PLATE & PAINT HOLES OR SURFACES MARKED WITH DOUBLE ASTERISK.

MISMATCH STEP OF ± .005 PERMISSIBLE DUE TO CHANGE OF CUTTERS AT INSIDE INTERSECTING SURFACES.

DIAMETERS MARKED MUST BE CONCENTRIC WITHIN FULL INDICATOR READING

HOLES MUST BE KEPT FREE OF CHROME PLATING SOLUTION.

ALL DIMENSIONS SHOWN TO BE MET AFTER CADMIUM PLATING. THICKNESS OF PLATE .0003 MIN. TO .0005 MAX. MIN. THICKNESS TO BE .0002 ON THREADED AREAS. NO ALLOWANCE FOR PLATING IN HOLES

125 SURFACE ROUGHNESS INCLUDING REAMED HOLES PER MIL-STD-10

200 FOR ALL DRILLED HOLES

REMOVE ALL BURRS. BREAK ALL EDGES .015-.030

INSPECTION INFORMATION MINIMUM PERMISSIBLE AVERAGE EDGE DISTANCE MARKED IS

SYMBOL f DENOTES SURFACE TO BE MACHINED

UNLESS OTHERWISE SPECIFIED TOLERANCE ON FLANGES IS ± 1/32

LENGTHS OF AN, NAS & MS AL ALY RIVETS SHORTER THAN 1 INCH ARE NOT SPECIFIED.

TOLERANCE ON LOFTED DELINEATIONS IS

DWG SIZE 34 X 88

GRUMMAN AIRCRAFT ENGRG CORP., BETHPAGE, L. I., NEW YORK

LM	SIZE J	CODE IDENT NO. 26512	LDW280-51657	A
MODEL OR END ITEM	SCALE FULL & NOTED		SHEET 10.00	

FOR PHOTO REPRODUCTION

THIS IS AN ORIGINAL DRAWING 2FR

LDW280-51657 B

MODEL OR END ITEM	NEXT ASSY	MODULE OR SER NO.	REQD PER MODULE OR END ITEM
PART NO.		GAEC SCH NO. 52–	

MODEL OR END ITEM	NEXT ASSY	MODULE OR SER NO.	REQD PER MODULE OR END ITEM
LM	LDW280-52553	LM-2 (32)	1
LM	LDW280-51553	LM-1 (31)	1
PART NO. LDW280-51657-29		GAEC SCH NO. 52–	

MODEL OR END ITEM	NEXT ASSY	MODULE OR SER NO.	REQD PER MODULE OR END ITEM
LM	LDW280-52509	LM-2 (32)	1
LM	LDW280-51509	LM-1 (31)	1
PART NO. LDW280-51657-27		GAEC SCH NO. 50-1	

WORK PACKAGE FUNCTION NO. 110 5

SH REV STATUS: FOR DESCRIPTION OF REV SEE SUBQ SH

SHEET	1.00	1.10	2.00	2.01	3.00	4.00	5.00	6.00
REV	B	A	B	B	B	B	B	B
SHEET		1.11			7.00	8.00	9.00	10.00
REV		B			B	B	B	B
SHEET		1.12						
REV		B						

LAST SECT LTR USED AM

LAST DASH NO. USED -29

GRUMMAN REL INFO B

PRIM NO. 207 JS(001) MP14 A 3-29-7

UNLESS OTHERWISE SPECIFIED DIMENSIONS ARE IN INCHES.

TOLERANCE UNLESS SPECIFIED FRACTIONS - DECIMALS – ANGLES ± 1/32 ±.020 ± 1/2°

ORIG DWG AUTH

DETAIL SPEC REQUIREMENT

CLASS II ENGRG CHANGE

CLASS I ENGRG CHANGE

CONTRACT NO. NAS 9-1100

LINE ITEM

DOCUMENTATION TYPE II

DRAWN BY J.GRIECO 1-27-67

RELIABILITY

LAYOUT BY PALLMEYER

THERMO 3/24/67 AB

CHECKED BY 2-9-67

~~GR.LEADER~~

VEH DES INT [illegible] 3/16/67

STRUCTURES [illegible] 3/24

STRUCTURES

WEIGHTS

PROJ ENGR J.A. McClughan 3/28/67

REL GROUP [illegible] 3/29/67

GRUMMAN AIRCRAFT ENGRG CORP
BETHPAGE, L. I., NEW YORK

STANDOFF INSTALLATION
DESCENT STAGE ~ L.H. THERMAL

SIZE B

CODE IDENT NO. 26512

LDW280-51657 B

SCALE NONE

SHEET 1.00 OF 10

ENG 77.1 12-65

01

NAS 9-1100

REVISIONS FOR CONTINUATION OF REVISIONS SEE SHEET 1.12

CHANGE LTR	ITEM NO.	SHEET NO.	ZONE	GRUMMAN INFO ONLY	DET SPEC	CLASS I	CLASS II	ENGRG ORDER	DESCRIPTION	EFFECTIVITY	DISPOSITION OF EXISTING PARTS REWORK	SCRAP	CHANGED BY AND DATE	ENGRG APPD	APPD
A	8	1.11,3,4,5&6						®	IN F/D ADDED VENT LOCATIONS PER LPC280-2(17 PLACES)&ADDED SH 1.11	LM-1 THRU LM-15	✓		NARONIS 3/13/67		
B	1	1.11,2.00, 3.00&4.00	6F 6C				✓	E.O.B1	ON-7 ASSY. ADDED LDW280-23712-7 & REMOVED LDW280P17572--23(TYP 4 PLACES)	LM-1 THRU-15	✓		R. NISBET 7-16-68		
	2	1.11,2.00,3.00 4,7&8.00	8B				✓	E.O.B2 LCD-1135	IN FLD& B/M ADDED FOR-17 & -25 LDW280P17461-59&-61 RESPECTIVELY. ADDED SECTION "AK-AK"						
	3	1.00,1.11 2.00, 2.01,3.00,4.00	9A 8D				✓	E.O.B3 LCD-1244	IN MOD BLOCK, B/M & FLD ADDED -27& -29 INSTL REMOVED LM-1(31) FROM -7 &-9	LM-1 (31)					
	4	1.00, 1.11				✓		E.O.B4 LCD-1244	REF E.O.B3 IN MOD BLOCK FOR-27 ADDED N/A LDW280-51509 EFF LM-1(31) (1 REQD), FOR-27 ADDED N/A LDW280-52509 EFF LM-2 (32) (1 REQD), FOR-29 ADDED N/A LDW280-52553 EFF LM-2(32) (1 REQD/MOD) FOR-9 REMOVED N/A LDW280-52553 EFF LM-2 (32), FOR-27 REMOVED N/A LDW280-51553 EFF LM-1(31), FOR-7 REMOVED N/A LDW280-52509 EFF LM-2 (32) REMOVED N/A LDW280-51509 EFF LM-1(31)	LM-1 (31) & LM-2 (32)		-7 -9 -27			
	5	1.00,1.11, 2.00,2.01, 3.00,4.00, 7.00&8.00	9A 8D 39D 40A			✓		E.O.B5 LCD 1244	ON-23 ADDED LDW280P17461-63 & REMOVED LDW280P17461-43, ON-25 ADDED LDW280P17461-67 & REMOVED LDW280P17461-37 REMOVED-9 FROM FLD. B/M & MOD BLOCK. ADDED LM-3 EFF TO-19; FOR-7 REMOVED LDW280-23712-3 (5), LDW280-23713-13(1), MS20470A3(12), GT535G-LAS-0004(14), LDW280P17572-23(4), LDW280-23713-15(1), LDW280-28721-1(3), FOR-19 REMOVED LDW280P17575-11(14), AN5156R4 (14); FOR-21 REMOVED GB10J-1 (14), GW10H-1(14), ADDED SECT AL-AL, FOR-25 REMOVED LDW280P17461-61.(-9 MAY BE REWORKED INTO-19)	LM-3 (33) THRU LM-15(45)	NOTED				
	6	1.11, 2.00 3.00&6.00	8B,30B 23A,31C	LFM-26		✓		E.O.B6 LCD 1847	FOR-29 ADDED LDW280P18339-5& -23. ADDED SECT. "AM-AM." ADDED NOTES 13 & 14.	LM-1 & LM-2	✓				
	7	1.00,1.11,2.00,2.01 3.00,4.00,7&8				✓		E.O.B7 LCD 1244	REF E.O.B5: IN FLD & B/M ON-7 REMOVED LDW280-23712-7 ASSY 4 PLACES WAS "LDW280P17572-23 (4) REMOVE FROM-7	LM-3 THRU LM-15	✓				
	8	1.00,1.11,2.00,2.01 7.00 THRU 10		P		✓		LEO-280-817 LCD 2360	REMOVED EFF LM-3 (33) THRU LM-15 (45) FROM N/A LDW280-53553 & LDW280-54553. CANCELLED SH 7.00 & 10.00.	LM-3 THRU LM-15		✓	RMS		

CHG APPROVED

LTR	~~GROUP LDR~~	VEH.DES.INT.	STRUCTURES	STRUCTURES	WEIGHTS	RELIABILITY	THERMO			
A							A. 3/24/67			
B										

GRUMMAN AIRCRAFT ENGRG CORP., BETHPAGE, L. I., NEW YORK

SIZE	CODE IDENT NO.		
B	26512	LDW280-51657	B ®

SCALE NONE SHEET 1.11

ENG 77.16 3-66

01 NAS 9-1100

REVISIONS FOR CONTINUATION OF REVISIONS SEE SHEET ________

CHANGE LTR	ITEM NO.	SHEET NO.	ZONE	GRUMMAN INFO ONLY	DET SPEC	CLASS I	CLASS II	ENGRG ORDER	DESCRIPTION	EFFECTIVITY	DISPOSITION OF EXISTING PARTS		CHANGED BY AND DATE	ENGRG APPD	GOVT APPD
											REWORK	SCRAP			
B	9	1.00, 1.12, 2.00 THRU 6.00, 8.00 & 9.00	9A	P		✓		LEO-280-822 LCD 2360 Ⓑ	REMOVED EFF. LM-3 (33) THRU LM-15 (45) FOR ALL DASH NOS ADDED SH 1.12 CANCELLED SH 8.00 & 9.00.	LM-3 THRU LM-15		✓	R. NISBET 7-16-68 RMS	X	X

CHG APPROVED	LTR	GROUP LDR	VEH DES INT	STRUCTURES	STRUCTURES	WEIGHTS	RELIABILITY	THERMO				
	B											

GRUMMAN AIRCRAFT ENGRG CORP., BETHPAGE, L. I., NEW YORK

SIZE	CODE IDENT NO.		
B	26512	LDW280-51657	B Ⓑ
SCALE NONE			SHEET 1.12

ENG 77.16 3-66

01

NAS 9-1100

								1	·	LDW280P18339-23	E		TAPE ASSY	SEE DWG						31C
								3	·	LDW280P17964-3			COVER	SEE DWG						7C,7D 8D
																				9B
								AR	·	LDW280P17590-11			TAPE							7B
								31	·	LDW280P17575-11			RETAINER							11B
								1	·	LDW280P18339-5			BLANKET ASSY							8B/30B
							38		·	LDW280P17523-3			CUP							9B
					1				'	LDW280P17461-55			BLANKET ASSY							27B
										-										40B
						1				-41										8B
				1						-39										8B
				1						LDW280P17461-59			BLANKET ASSY							8B
																				8A
																				7B
																				8F
								·	7	LDW280-23712-3			STANDOFF ASSY							11E
								·	8	LDW280-23712-1			STANDOFF ASSY	SEE DWG						18A
																		NONE	NONE	40A
																				40A
																				40A
																				40A
							1			LDW280-51657-17			SKIN ASSY							9A
							1			-15			BLANKET ASSY							9A
							1			-13			BLANKET ASSY							9A
								1		-11			BLANKET ASSY			SEE NOTE 9				9A
										-29			BLANKET INSTL							9A
										LDW280-51657-27	E		STANDOFF INSTL					NONE	NONE	9A
				-17	-15	-13	-11	-29	-27	PART NO.	I&T	CODE IDENT	NOMENCLATURE OR DESCRIPTION	MATERIAL	GOVT SPEC	COML SPEC	STOCK SIZE	PROCESS SYM	FINISH NO.	ZONE
QTY PER ASSEMBLY																				

SYM OR NO.	PROCESS SYM OR FINISH NO.	GRUMMAN SPEC OR MILITARY SPEC	SYM OR NO.	PROCESS SYM OR FINISH NO.	GRUMMAN SPEC OR MILITARY SPEC	SYM OR NO.	PROCESS SYM OR FINISH NO.	GRUMMAN SPEC OR MILITARY SPEC

I & T: IDENTIFICATION AND TRACEABILITY IN ACCORDANCE WITH NONE

GRUMMAN AIRCRAFT ENGRG CORP., BETHPAGE, L. I., NEW YORK

SIZE	CODE IDENT NO.		
B	26512	LDW280-51657	B
SCALE NONE		SHEET 2.00	

ENG 77.2 5-64

01

NAS 9-1100

-17	-15	-13	-11	-29	-27	PART NO.	I&T	CODE IDENT	NOMENCLATURE OR DESCRIPTION	MATERIAL	GOVT SPEC	COML SPEC	STOCK SIZE	PROCESS SYM	FINISH NO.	ZONE
				14		MS51957-30	E		SCREW	STD PART						
						MS20470A3			RIVET	STD PART						
				17		AN515-6R4			SCREW	STD PART						
				AR		SEE NOTE 11			THREAD ASTROQUARTZ							
			38			GS26D-1			STANDOFF	GRUMMAN STD						
				AR		GT835P-8			TAPE	GRUMMAN STD						
					AR	GT835M-8			TAPE							
				2		GT535L-HA-0250			TAPE							
					24	GT535G-LAS-0004			TAPE							
			AR			GS577A-1			STAPLE							
			24			GW10H-3			WASHER							
			29			GW10H-1			WASHER							
			24			GR11B-1			RETAINER							
			29			GB10J-1	E		BUSHING	GRUMMAN STD						

QTY PER ASSEMBLY

SYM OR NO.	PROCESS SYM OR FINISH NO.	GRUMMAN SPEC OR MILITARY SPEC	SYM OR NO.	PROCESS SYM OR FINISH NO.	GRUMMAN SPEC OR MILITARY SPEC	SYM OR NO.	PROCESS SYM OR FINISH NO.	GRUMMAN SPEC OR MILITARY SPEC

I&T: IDENTIFICATION AND TRACEABILITY IN ACCORDANCE WITH NONE

GRUMMAN AIRCRAFT ENGRG CORP., BETHPAGE, L. I., NEW YORK

SIZE	CODE IDENT NO.		
B	26512	LDW280-51657	B

SCALE NONE

SHEET 2.01

ENG 77.2 5-64

01

NAS 9-1100

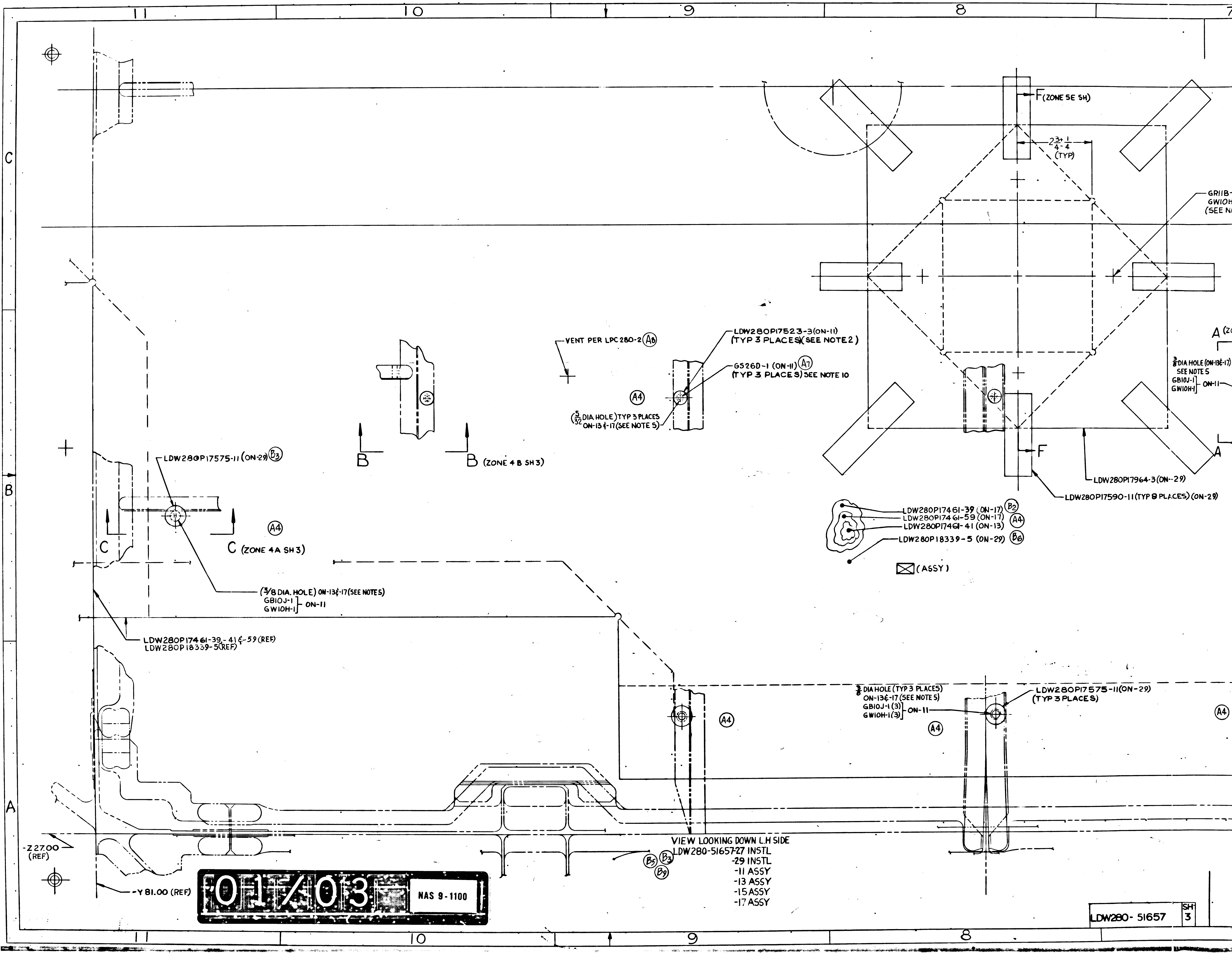
11
10
9
8
C
B
A
F (ZONE 5E SH)
$2\frac{3}{4}\pm\frac{1}{4}$ (TYP)
GR11B-
GW10H
(SEE N
A (ZO
$\frac{3}{8}$ DIA HOLE (ON-13 & -17)
SEE NOTE 5
GB10J-1
GW10H-1
ON-11
A
F
LDW280P17964-3 (ON-29)
LDW280P17590-11 (TYP 8 PLACES) (ON-29)
VENT PER LPC 280-2 (A8)
LDW280P17523-3 (ON-11)
(TYP 3 PLACES) (SEE NOTE 2)
G526D-1 (ON-11) (A7)
(TYP 3 PLACES) SEE NOTE 10
(A4)
($\frac{5}{32}$ DIA HOLE) TYP 3 PLACES
ON-13 & -17 (SEE NOTE 5)
B
B (ZONE 4 B SH 3)
LDW280P17575-11 (ON-29) (B3)
C
C (ZONE 4A SH 3)
(A4)
($\frac{3}{8}$ DIA. HOLE) ON-13 & -17 (SEE NOTES)
GB10J-1
GW10H-1
ON-11
LDW280P17461-39, -41 & -59 (REF)
LDW280P18339-5 (REF)
LDW280P17461-39 (ON-17) (B2)
LDW280P17461-59 (ON-17) (A4)
LDW280P17461-41 (ON-13)
LDW280P18339-5 (ON-29) (B6)
☒ (ASSY)
$\frac{3}{8}$ DIA HOLE (TYP 3 PLACES)
ON-13 & -17 (SEE NOTE 5)
GB10J-1 (3)
GW10H-1 (3)
ON-11
(A4)
LDW280P17575-11 (ON-29)
(TYP 3 PLACES)
(A4)
(A4)
-Z 27.00
(REF)
Y 81.00 (REF)
(B5) (B3)
(B9)
VIEW LOOKING DOWN L.H SIDE
LDW280-51657-27 INSTL
-29 INSTL
-11 ASSY
-13 ASSY
-15 ASSY
-17 ASSY
7

01/03

NAS 9-1100

LDW280-51657 SH 3

7
6
5
4
3
TEMPLATE BUTT LINE
10
TO PHOTO BUTT LINE
ON SH 4
5
PHOTO BUTT LINE
(B1)(B5)
GR11B-1 (8)
GW10H-(8)
(SEE NOTE 8
(B3) LDW280P17575-11 (ON-29)
(TYP 2 PLACES)
(A4)
(3/8 DIA. HOLE) TYP 2 PLACES
ON-13 & -17 (SEE NOTE 5)
GB10J-1(2)
GW10H-1(2) ON-11
G
G (ZONE 4E SH4)
A (ZONE 4B SH3
LDW280P17575-11(ON-29) (B3)
MS51957-30(REF)
3/8 DIA HOLE (ON-13 & -17)
SEE NOTE 5
GB10J-1
GW10H-1 ON-11
A
56
LDW280P17964-3(ON-29)
0P17590-11(TYP 8 PLACES) (ON-29)
VENT PER LPC280-2 (A8)
575-11(ON-29)
S)
D
(A4)
LDW280P17461-39,-41 & -59(REF)
LDW280P18339-5(REF)
D (ZONE 2B SH3)
-Z 27.00 (REF)
-Y 27.00 (REF)
LDW280-51657 SH 3
LDW280P17575-11 (REF) (B3)
MS51957-30 (ON-29)
LDW280P17461-39,-41 & -59(REF)
LDW280P18339-5(REF)
(B3) LDW280P51105 (REF)
LDW280-28509(REF)
SECTION A-A (ZONE 7B SH3)
(ROTATED CCW 90°) NO SCALE
LDW280P17523-3(REF)
LDW280P17461-39,-41 & -59(REF)
LDW280P18339-5 (REF)
GS26D-1(REF)
LDW280-28509(REF)
SECTION B-B (ZONE 10B SH3)
NO SCALE
(A7)
(B3) MS51957-30 (ON-29)
LDW280P17575-11 (REF)
LDW280P17461-39,-41,-59(REF)
LDW280P18339-5(REF)
LDW280P51103(REF) (B3)
LDW280-28509(REF)
-Y 81.00
(REF)
3(REF)
SECTION C-C (ZONE 11B SH3)
NO SCALE
X196.00(REF)
X131.14 (REF)
-Y27.00(REF)
LDW280P18339-23(REF)
SECTION AM-AM
(NO SCALE)
LDW280P17575-11(REF)
(B3) MS51957-30(3)(ON-29)
LDW280
LDW280P174
LDW280P1
(A4) SECTION D-D (ZONE 7A SH3)
NO SCALE
(ZONE 3B) AM
LDW2
AM
-Z
+Z
+Y
FOR ENGR REFERENCE
LDW280-51657 SH 3
02/03
NAS 9-1100

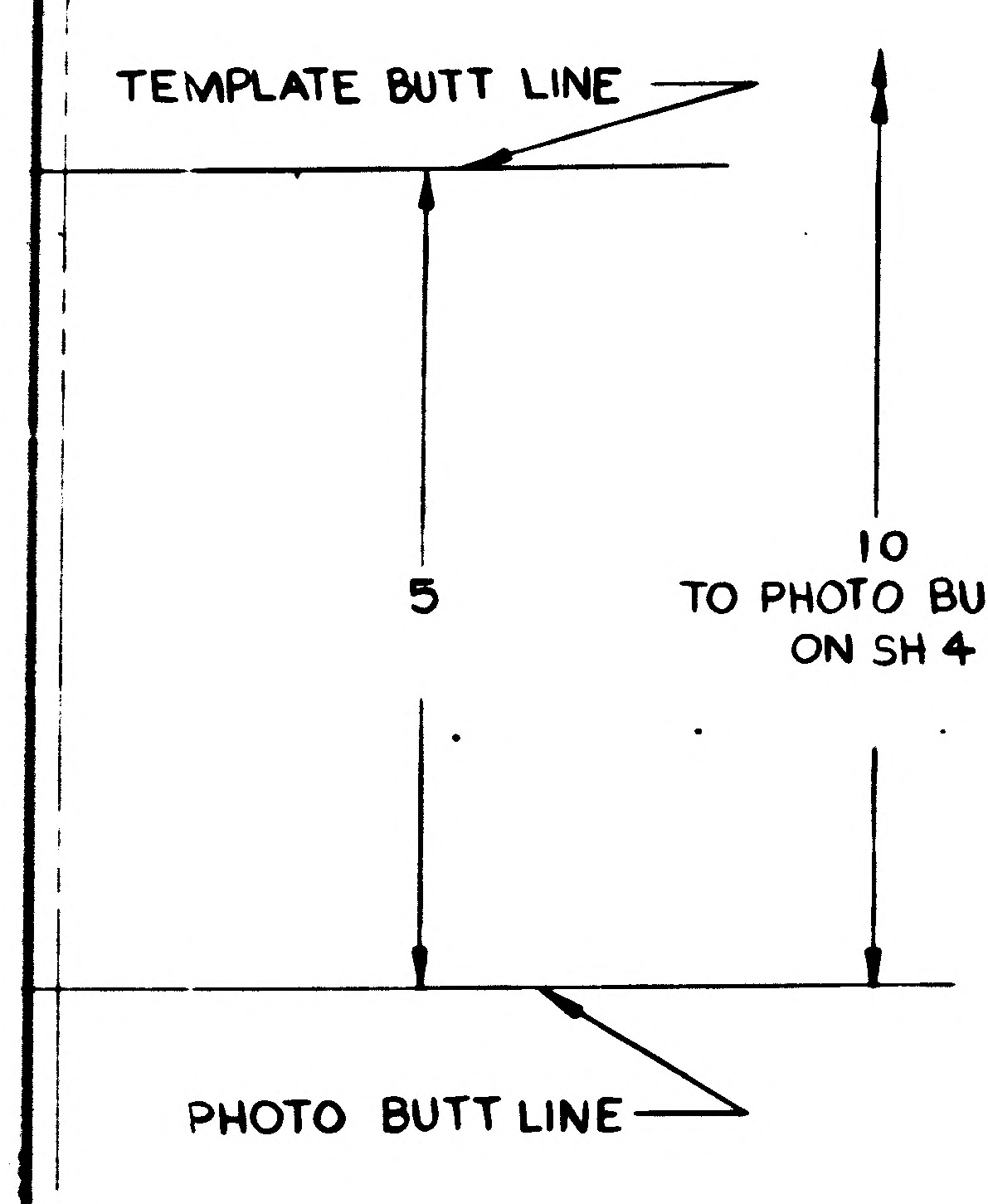
TEMPLATE BUTT LINE
5
10
TO PHOTO BUTT LINE
ON SH 4
PHOTO BUTT LINE

G (ZONE 4 E SH 4)

56

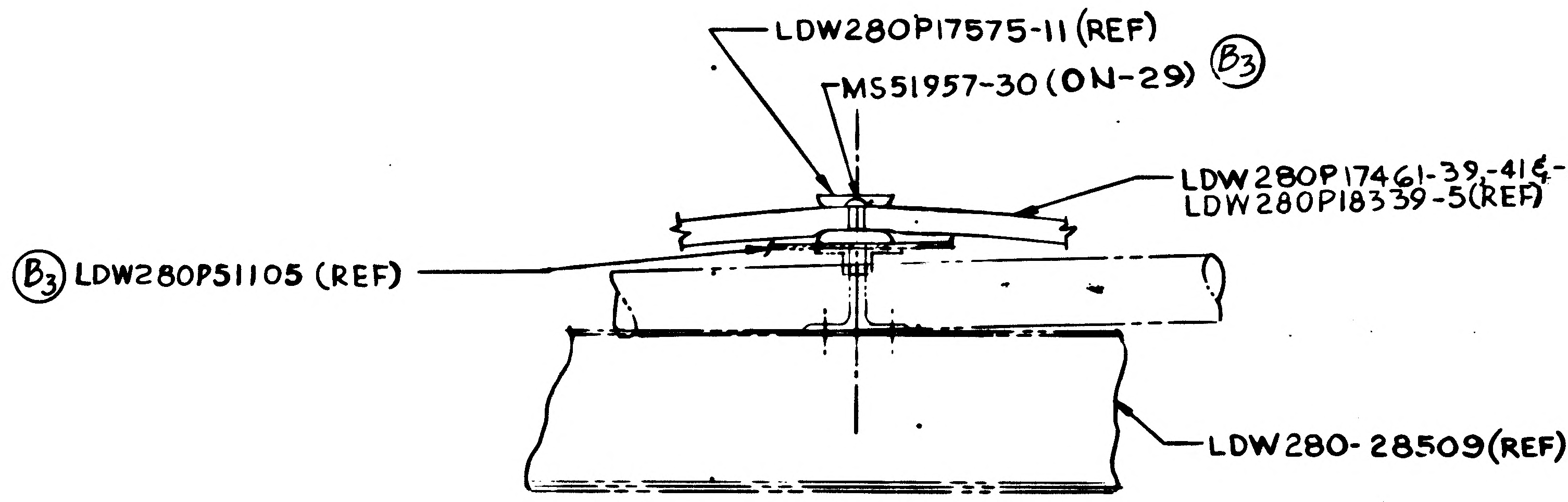
LDW280P17575-11 (REF)
MS51957-30 (ON-29) (B3)
LDW280P17461-39,-41 & -59 (REF)
LDW280P18339-5 (REF)
(B3) LDW280P51105 (REF)
LDW280-28509 (REF)

SECTION A-A (ZONE 7B SH 3)
(ROTATED CCW 90°) NO SCALE

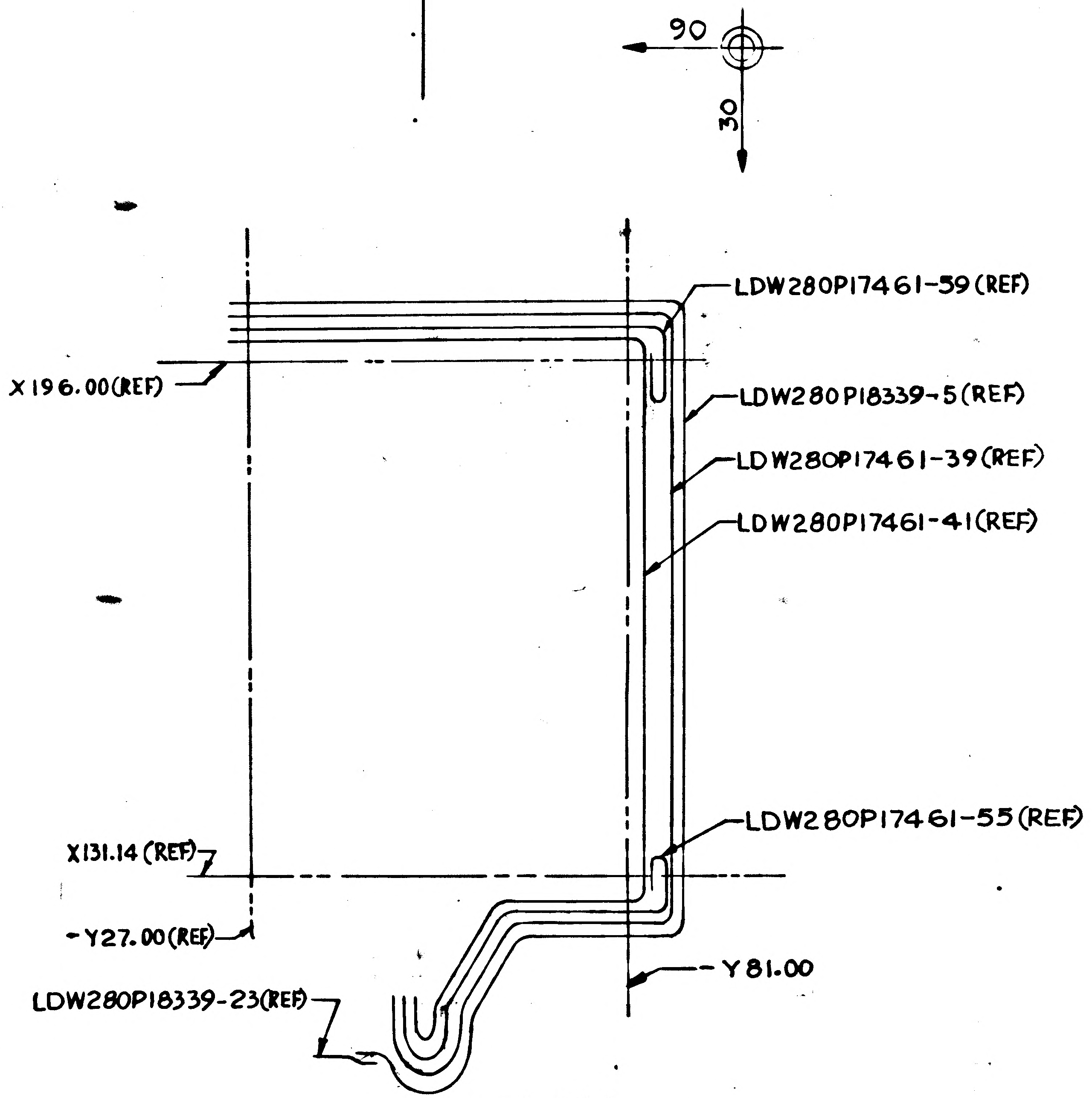
90
30
LDW280P17461-59 (REF)
X196.00 (REF)
LDW280P18339-5 (REF)
LDW280P17461-39 (REF)
LDW280P17461-41 (REF)
LDW280P17461-55 (REF)
X131.14 (REF)
-Y27.00 (REF)
Y81.00
LDW280P18339-23 (REF)

SECTION AM-AM (ZONE 3A)
(NO SCALE)

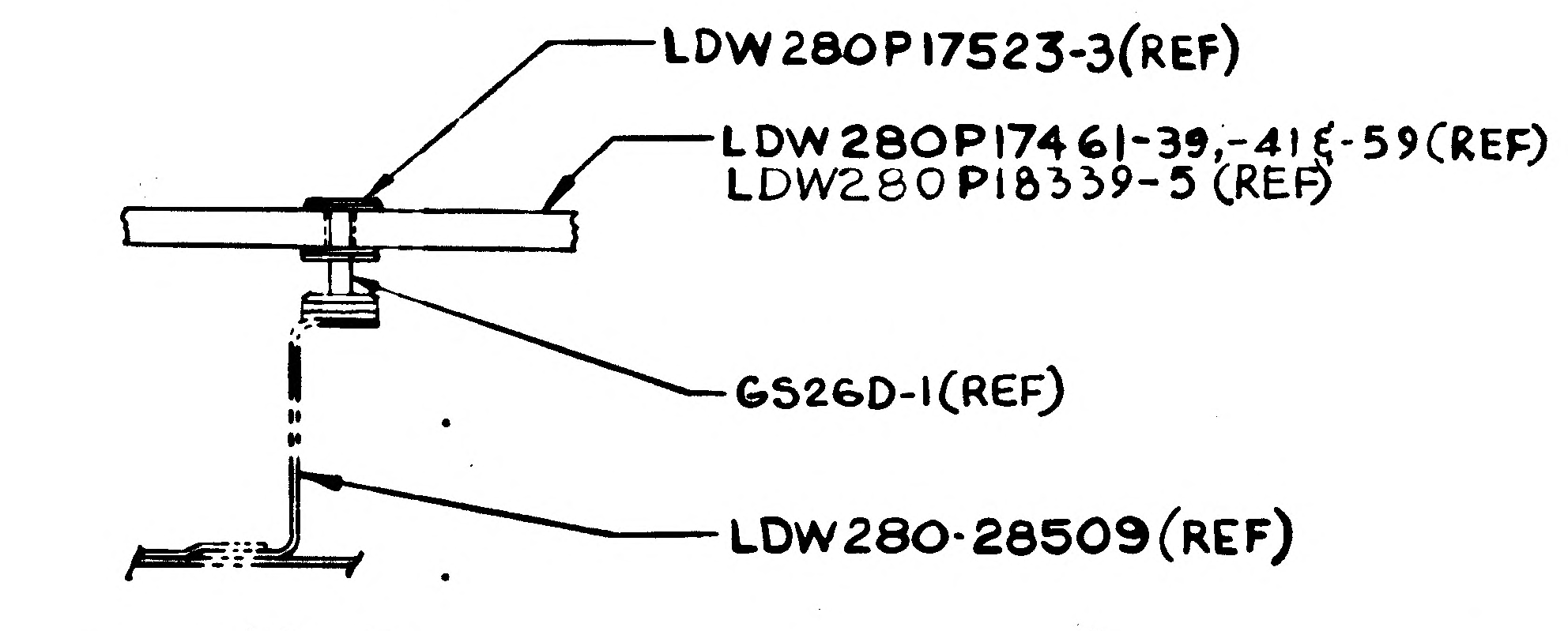
LDW280P17523-3 (REF)
LDW280P17461-39,-41 & -59 (REF)
LDW280P18339-5 (REF)
GS26D-1 (REF)
LDW280-28509 (REF)

SECTION B-B (ZONE 10B SH 3)
NO SCALE
(A7)

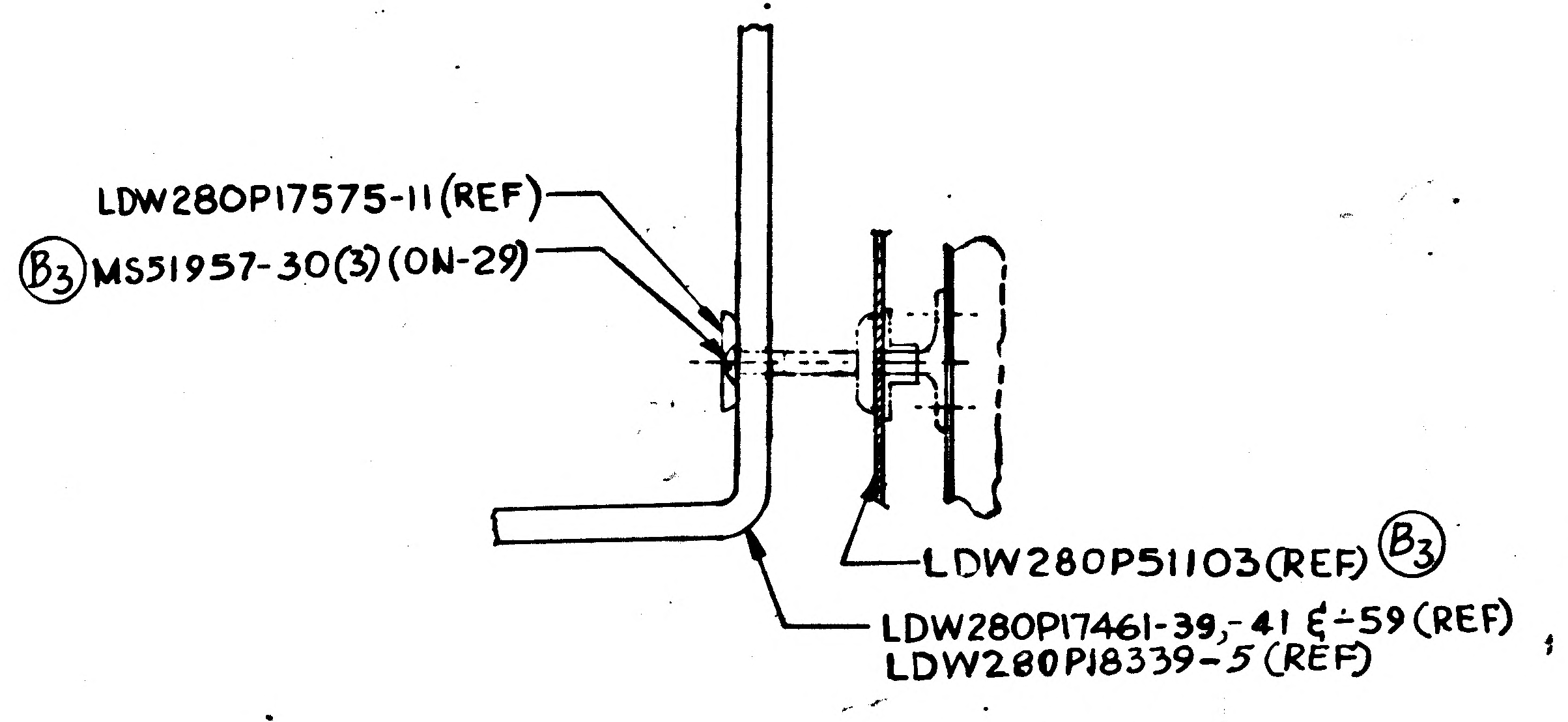
LDW280P17575-11 (REF)
(B3) MS51957-30(3) (ON-29)
LDW280P51103 (REF) (B3)
LDW280P17461-39,-41 & -59 (REF)
LDW280P18339-5 (REF)

(A4) SECTION D-D (ZONE 7A SH 3)
NO SCALE

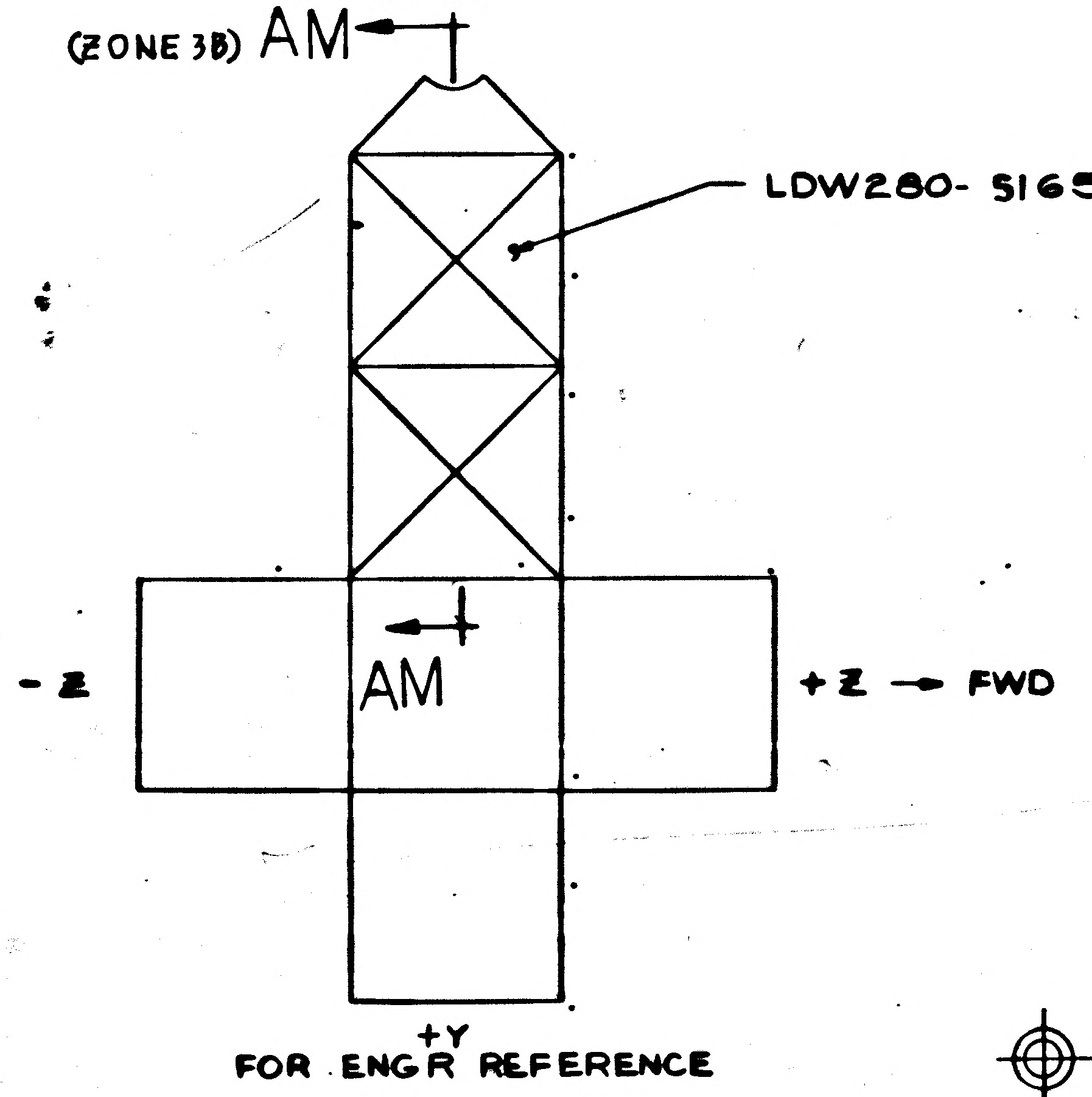
(ZONE 3B) AM
(B3)
LDW280-51657-29 & 27
-Z
AM
+Z → FWD
+Y

FOR ENG'R REFERENCE

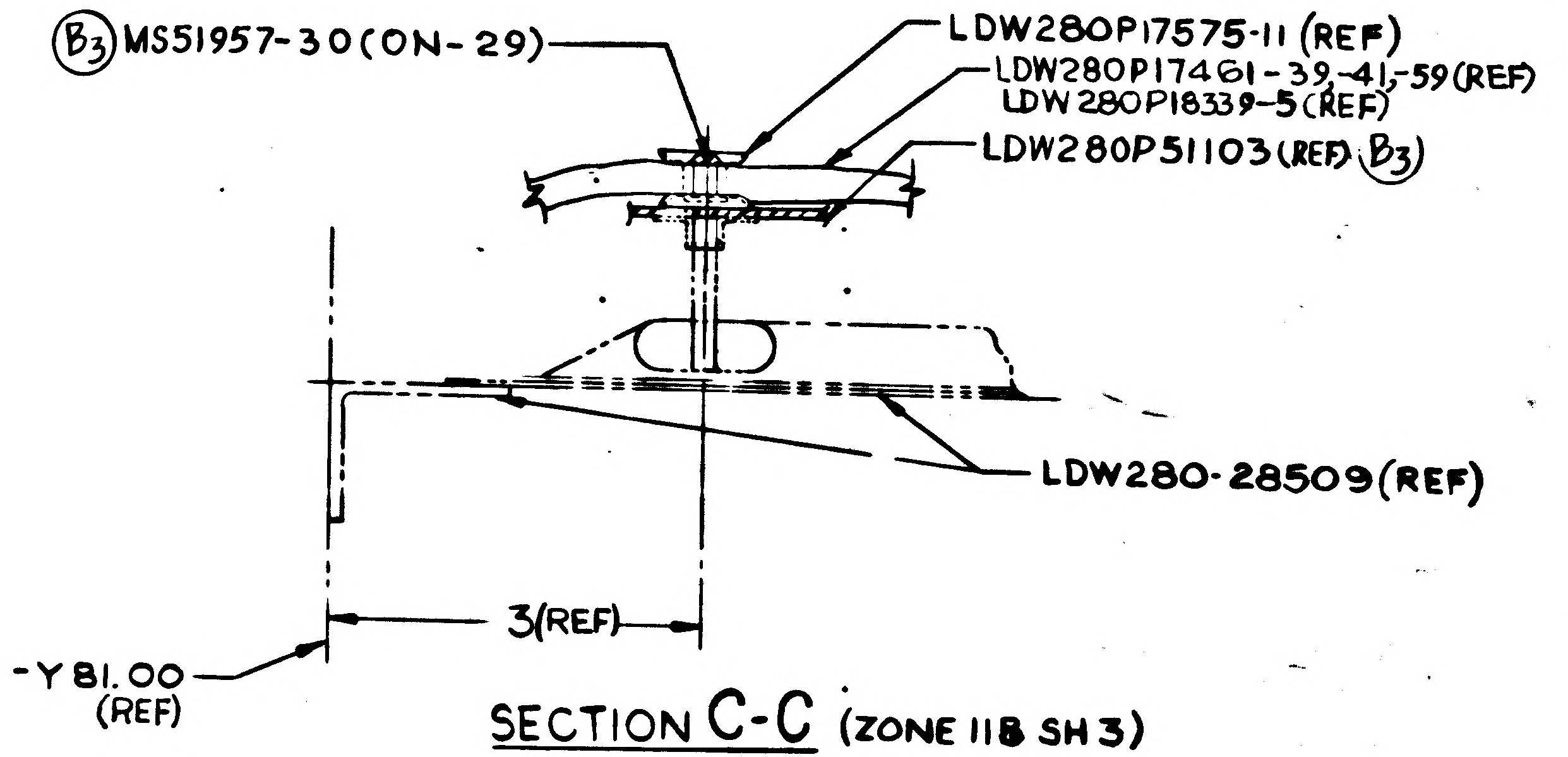
(B3) MS51957-30 (ON-29)
LDW280P17575-11 (REF)
LDW280P17461-39,-41,-59 (REF)
LDW280P18339-5 (REF)
LDW280P51103 (REF) (B3)
LDW280-28509 (REF)
-Y81.00
(REF)
3 (REF)

SECTION C-C (ZONE 11B SH 3)
NO SCALE

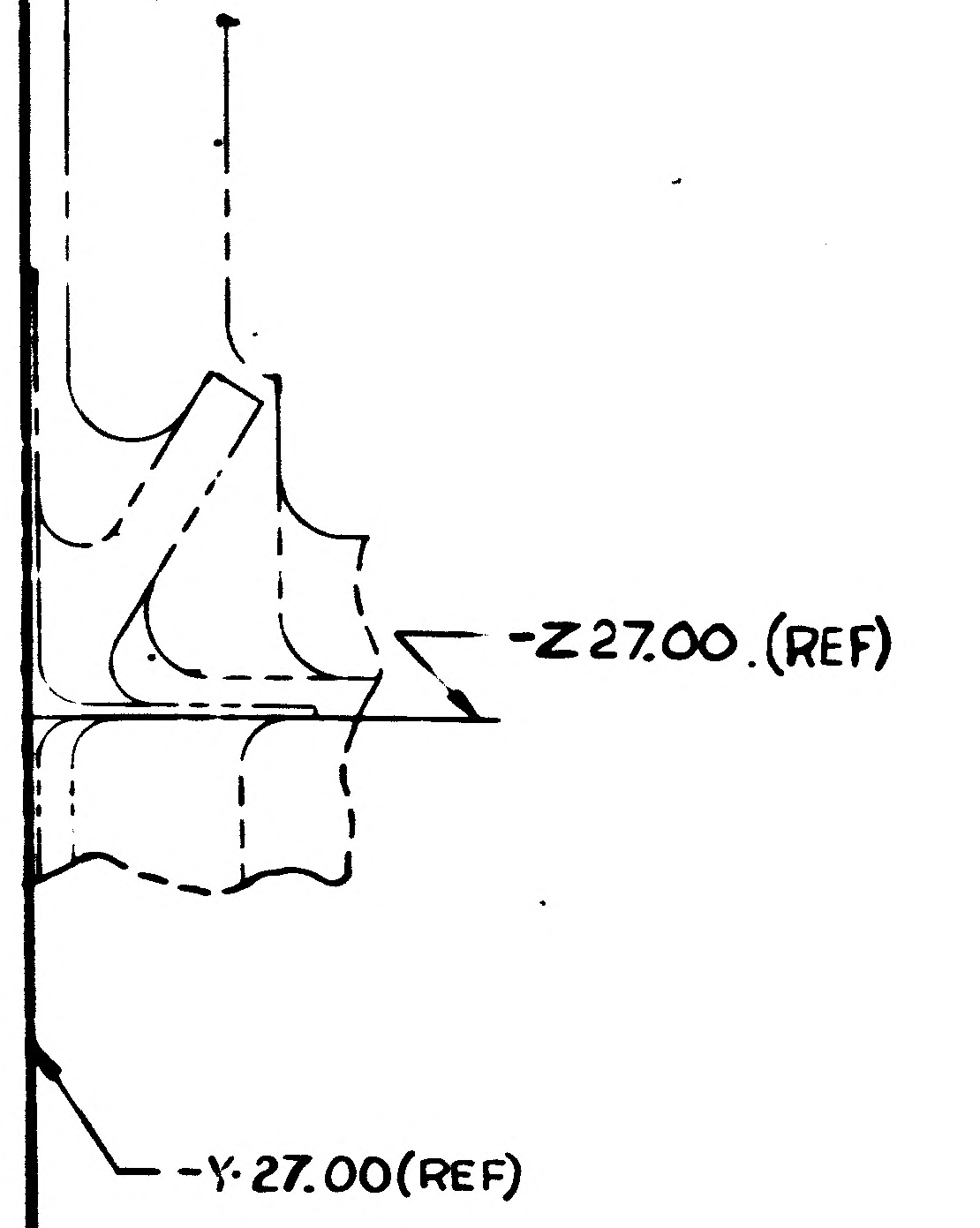
-Z27.00 (REF)
-Y27.00 (REF)

NOTES:

1. BOND GT535G-LAS-0004 TO STRUCTURE AS SHOWN WITH EPON 934 PER LSP14-22500 "CURE RANGE I OR ROOM TEMP CURE FOR 7 DAYS PERMITTED
2. BOND LDW280P17523-3 TO GS26D-1 PER LPC280-14

3. GT535L-HA-0250 SEW TO LDW280P17461 AT 3/16 ± 1/16 FROM EDGES OF GT535L-HA-0250 IN ACCORDANCE WITH FED STD # 751a & STITCH TYPE 301 USING ASTROQUARTZ THREAD.

4. ~~LDW280-28657-5 ASSY SHOWN ON THIS DRAWING HAS BEEN DRAWN TO PROJECTED DIMENSIONS THIS ASSEMBLY SHALL BE MADE TO EXPANDED DIMENSIONS BY MAKING A PHOTO LOFT TO THE EXPANED TRAMMEL POINT DIMENSIONS INDICATED BELOW. THE EXPANSION RATIO IS .030 IN/IN~~

~~TRAMMEL POINT~~		~~SHOWN~~	~~EXPANDED~~
~~SHEET 3~~	~~LENGTH~~	~~90~~	~~92.700~~
	~~3 WIDTH~~	~~30~~	~~30.900~~
~~SHEET 4~~	~~LENGTH~~	~~90~~	~~92.700~~
	~~4 WIDTH~~	~~30~~	~~30.900~~
~~SHEET 5~~	~~LENGTH~~	~~90~~	~~92.700~~
	~~5 WIDTH~~	~~30~~	~~30.900~~
	~~6 LENGTH~~	~~70~~	~~72.100~~
	~~6 WIDTH~~	~~30~~	~~30.900~~
~~CONTROL POINTS~~			
~~SHEET 3~~		~~56~~	~~57.680~~
	~~4~~	~~56~~	~~57.680~~
	~~5~~	~~72~~	~~74.160~~
	~~6~~	~~36~~	~~37.080~~
~~PHOTO BUTT (ALL)~~		~~10.0~~	~~10.300~~
~~TEMP BUTT (ALL)~~		~~5.0~~	~~5.150~~

5. ALL ALUMINIZED MYLAR PARTS SHALL BE MADE WITH EXPANDED DIMS. EXPANSION RATIO IS TO BE .050 IN/IN. e.g. 10.000 SHOWN EXPANDS TO 10.500.

ALL ALUMINIZED POLYIMIDE PARTS SHALL BE MADE WITH EXPANDED DIMS. EXPANSION RATIO IS TO BE .070 IN/IN e.g. 10.000 SHOWN EXPANDS TO 10.700.

6. COVER ALL EXPOSED STANDOFFS USING 2 INCH STRIPS OF LDW280P17590-11 TAPE (ON-~~9 & 19~~, -29)

7. WRAP STEMS OF ALL ~~LDW280-28721,~~ LDW280-23712-1 & -3, ~~LDW280-23713-13 & -15,~~ ~~LDW280P17572-23~~ WITH GT835M-8 TAPE (1 LAYER ON-7).

8. INSTALL GR11B-1 & GW10H-3 PER LPC-280-3.

9. FABRICATE-11 ~~& -21~~ PER LPC-280-1.
10. LDW280P17700-17 MAY BE USED AS AN ALTERNATE FOR GS26D-1.
11. ASTROQUARTZ RQ754-12 THREAD MAY BE PURCHASED FROM DODGE FIBERS CORP P.O. BOX 124, HOOSICK FALLS, N.Y. CODE IDENT NO. 07512.
12. FINAL SIZE (WITH FOLD AND SEAM LOCATION) OF BLANKET ASSEMBLIES SHALL BE DETERMINED FROM APPROVED MASTER TEMPLATE (AND/OR FULL SIZE MOCKUP).
13. TAPE LDW280P18339-23 TO LDW280-28714 & LDW280-28665
14. "THIS DRAWING AFFECTED BY THE FOLLOWING LFM SEE LFM FOR EFFECTIVITY AND MODIFICATION: LFM-26"

MANUFACTURING OPERATIONS UNLESS OTHERWISE SPECIFIED NOTES CHECKED ✓ APPLY TO THIS DWG.	
RUBBER STAMP PART NUMBER AND ALL OTHER MARKINGS IN REGION MARKED ☒ USE BOTH SIDES IF NECESSARY.	✓
FILLET AND INSIDE CORNER RADII TOLERANCES .016R TO .062R ± .010 .063R TO .250R ± .015 OVER .250R ± .030	
DEPTH SHOWN FOR TAPPED HOLES IS FULL THDS. 2-3 IMP THDS. BEYOND PERMISSIBLE.	
EXTERNAL THREAD LENGTH. SHOWN INCLUDES 2 IMPERFECT THREADS MAX.	
DO NOT CADMIUM PLATE & PAINT HOLES OR SURFACES MARKED WITH DOUBLE ASTERISK.	
MISMATCH STEP OF ± .005 PERMISSIBLE DUE TO CHANGE OF CUTTERS AT INSIDE INTERSECTING SURFACES.	
DIAMETERS MARKED MUST BE CONCENTRIC WITHIN FULL INDICATOR READING	
HOLES MUST BE KEPT FREE OF CHROME PLATING SOLUTION.	
ALL DIMENSIONS SHOWN TO BE MET AFTER CADMIUM PLATING. THICKNESS OF PLATE .0003 MIN. TO .0005 MAX. MIN. THICKNESS TO BE .0002 ON THREADED AREAS. NO ALLOWANCE FOR PLATING IN HOLES	
125 SURFACE ROUGHNESS INCLUDING REAMED HOLES PER MIL-STD-10	
250 FOR ALL DRILLED HOLES	
REMOVE ALL BURRS. BREAK ALL EDGES .005-.010	
INSPECTION INFORMATION MINIMUM PERMISSIBLE AVERAGE EDGE DISTANCE MARKED .18	
SYMBOL f DENOTES SURFACE TO BE MACHINED	
UNLESS OTHERWISE SPECIFIED TOLERANCE ON FLANGES IS ± 1/32	
LENGTHS OF AN, NAS & MS AL ALY RIVETS SHORTER THAN 1 INCH ARE NOT SPECIFIED.	✓
TOLERANCE ON LOFTED DELINEATIONS IS ± 1/32	✓

DWG SIZE 36 X 106

PRINTING INFO ONLY
FULL SIZE SHEET AREA (36 X 106)= 27 SQ. FT.
1/2 SIZE SHEET AREA (1/4 OF F.S.)= 6.75 SQ. FT.
PRINT TRIM LINE

LDW280-51657 B

03/03

NAS 9-1100

GRUMMAN AIRCRAFT ENGRG CORP., BETHPAGE, L.I., NEW YORK

MODEL OR END ITEM	SIZE	CODE IDENT NO.		
LM	J	26512	LDW280-51657	B
	SCALE FULL & NOTED		SHEET 3.00	

LDW280-51657 SH 3

FOR PHOTO REPRODUCTION

THIS IS AN ORIGINAL DWG

10-D-90

LDW280-51657 SH 4

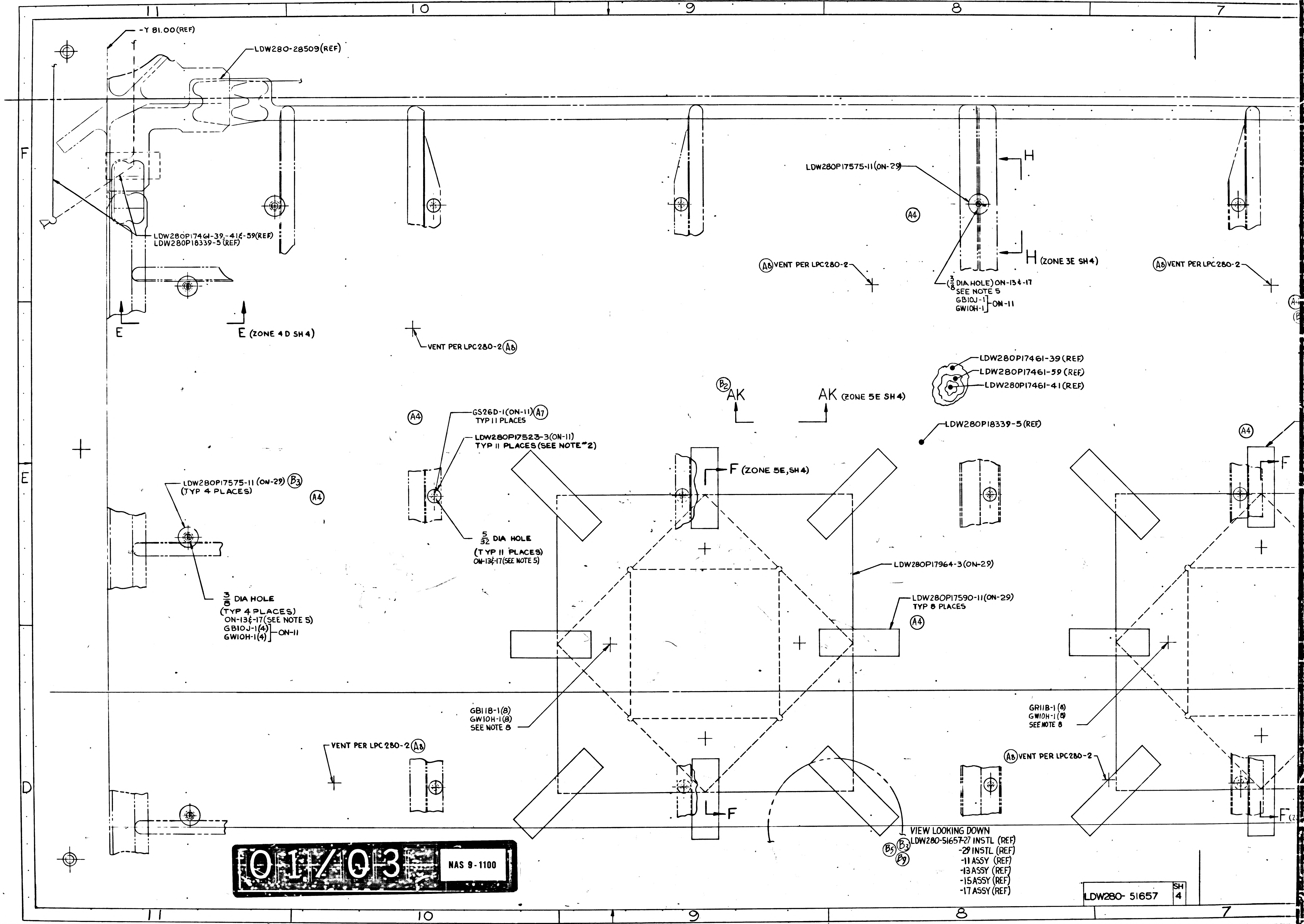
11
10
9
8
7
F
E
D
-Y 81.00 (REF)
LDW280-28509 (REF)
LDW280P17461-39, -41 & -59 (REF)
LDW280P18339-5 (REF)
E
E (ZONE 4 D SH 4)
VENT PER LPC280-2 (A8)
LDW280P17575-11 (ON-29)
(A4)
H
H (ZONE 3E SH4)
(A8) VENT PER LPC280-2
(3/8 DIA HOLE) ON-13 & -17
SEE NOTE 5
GB10J-1
GW10H-1
ON-11
(A8) VENT PER LPC280-2
LDW280P17461-39 (REF)
LDW280P17461-59 (REF)
LDW280P17461-41 (REF)
(B2) AK
AK (ZONE 5E SH 4)
LDW280P18339-5 (REF)
(A4)
GS26D-1 (ON-11) (A7)
TYP 11 PLACES
LDW280P17523-3 (ON-11)
TYP 11 PLACES (SEE NOTE #2)
F (ZONE 5E, SH 4)
F
LDW280P17575-11 (ON-29) (B3)
(TYP 4 PLACES)
(A4)
5/32 DIA HOLE
(TYP 11 PLACES)
ON-13 & -17 (SEE NOTE 5)
LDW280P17964-3 (ON-29)
3/8 DIA HOLE
(TYP 4 PLACES)
ON-13 & -17 (SEE NOTE 5)
GB10J-1 (4)
GW10H-1 (4)
ON-11
LDW280P17590-11 (ON-29)
TYP 8 PLACES
(A4)
GB11B-1 (8)
GW10H-1 (8)
SEE NOTE 8
GR11B-1 (8)
GW10H-1 (8)
SEE NOTE 8
VENT PER LPC 280-2 (A8)
(A8) VENT PER LPC280-2
F
F
VIEW LOOKING DOWN
LDW280-51657-27 INSTL (REF)
-29 INSTL (REF)
-11 ASSY (REF)
-13 ASSY (REF)
-15 ASSY (REF)
-17 ASSY (REF)
(B5) (B3) (B9)
LDW280- 51657
SH 4

01/03 NAS 9-1100

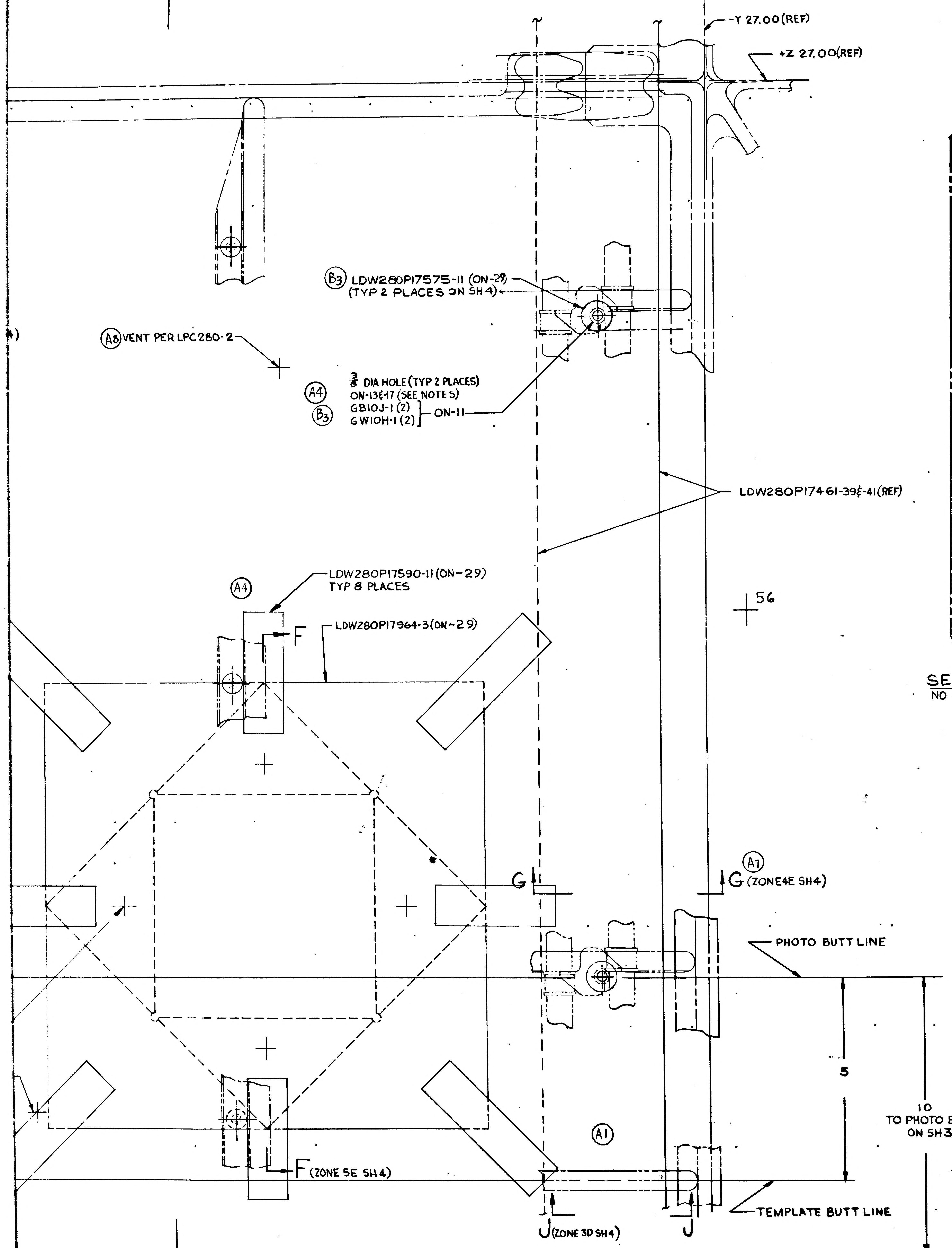
-Y 27.00 (REF)
+Z 27.00 (REF)
(B3) LDW280P17575-11 (ON-29)
(TYP 2 PLACES ON SH 4)
(A8) VENT PER LPC280-2
(A4) 3/8 DIA HOLE (TYP 2 PLACES)
ON-13 & 17 (SEE NOTE 5)
(B3) GB10J-1 (2)
GW10H-1 (2)
ON-11
LDW280P17461-39 & -41 (REF)
56
(A4) LDW280P17590-11 (ON-29)
TYP 8 PLACES
LDW280P17964-3 (ON-29)
F
G
G (ZONE 4E SH4)
(A7)
PHOTO BUTT LINE
5
10
TO PHOTO BUTT LINE
ON SH3
(A1)
F (ZONE 5E SH 4)
J (ZONE 3D SH4)
J
TEMPLATE BUTT LINE

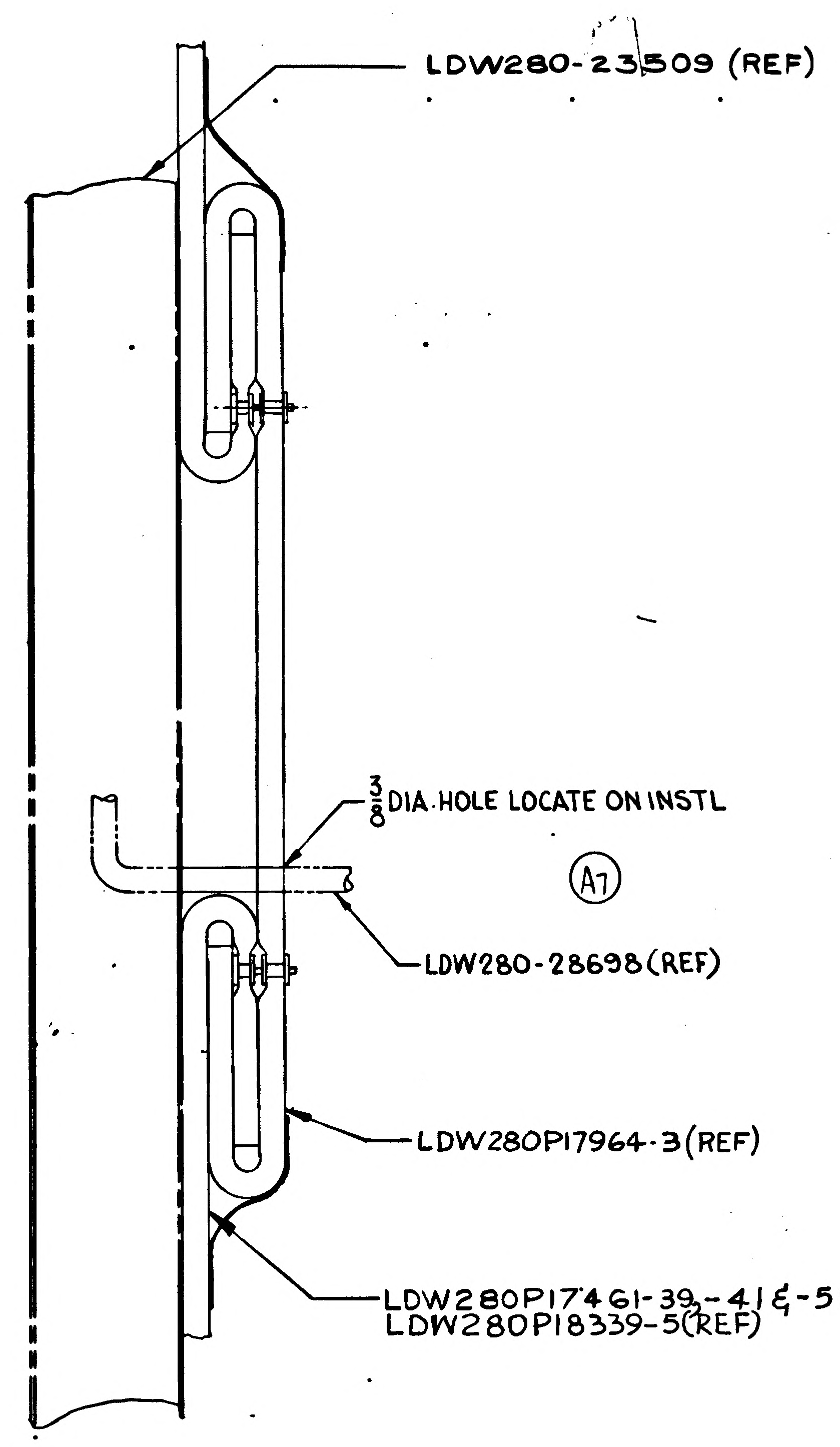
LDW280-23509 (REF)
3/8 DIA HOLE LOCATE ON INSTL
(A7)
LDW280-28698 (REF)
LDW280P17964-3 (REF)
LDW280P17461-39, -41 & -59 (REF)
LDW280P18339-5 (REF)

SECTION F-F (ZONE 9E, SH4)
NO SCALE
(A4)

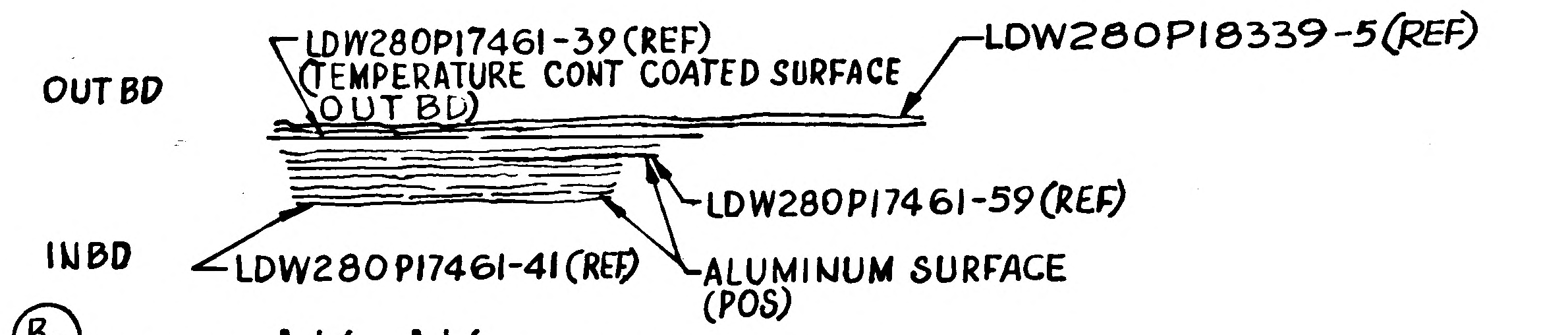
OUT BD
LDW280P17461-39 (REF)
(TEMPERATURE CONT COATED SURFACE
OUT BD)
LDW280P18339-5 (REF)
INBD
LDW280P17461-59 (REF)
LDW280P17461-41 (REF)
ALUMINUM SURFACE
(POS)

(B2) SECTION AK-AK (ZONE 9E, SH 4)
(NO SCALE)

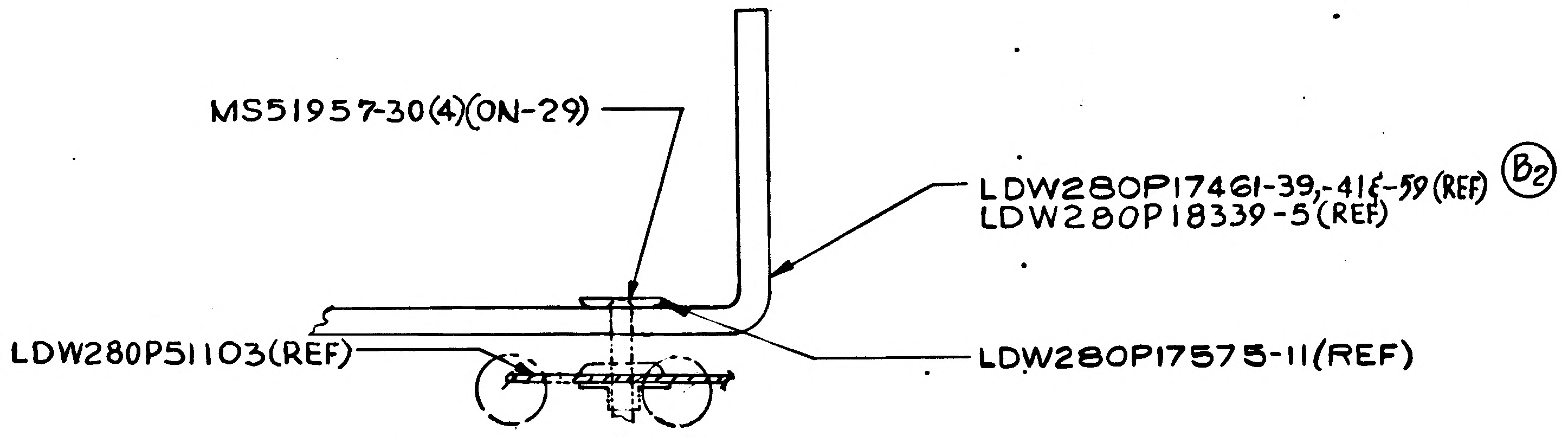
MS51957-30 (4) (ON-29)
LDW280P17461-39, -41 & -59 (REF) (B2)
LDW280P18339-5 (REF)
LDW280P51103 (REF)
LDW280P17575-11 (REF)

(A7) SECTION G-G (ZONE 6D, SH4 & 6B SH 3)
NO SCALE
(A4)

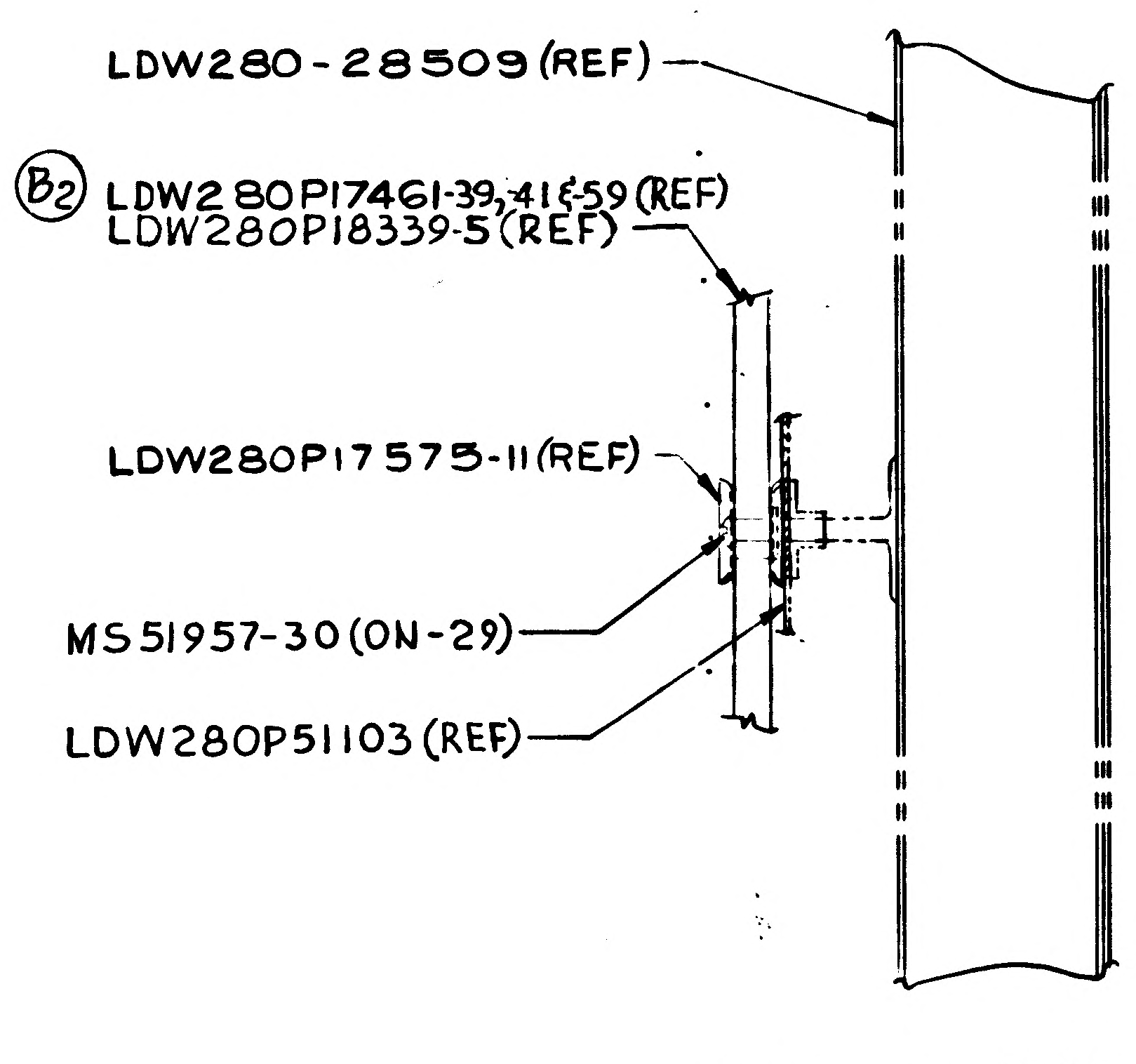
LDW280-28509 (REF)
(B2) LDW280P17461-39, -41 & 59 (REF)
LDW280P18339-5 (REF)
LDW280P17575-11 (REF)
MS51957-30 (ON-29)
LDW280P51103 (REF)

SECTION H-H (ZONE 8F SH4)
NO SCALE

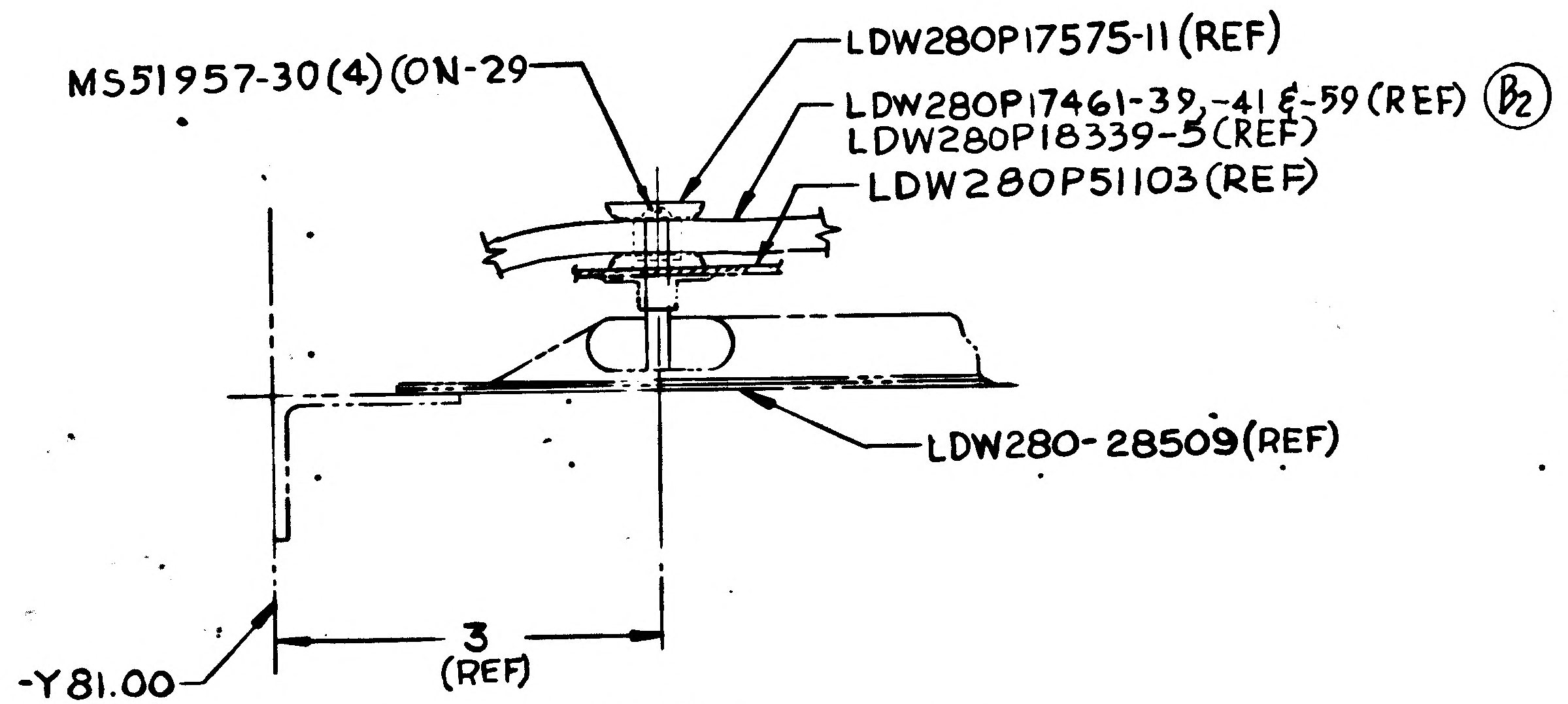
MS51957-30 (4) (ON-29
LDW280P17575-11 (REF)
LDW280P17461-39, -41 & -59 (REF) (B2)
LDW280P18339-5 (REF)
LDW280P51103 (REF)
LDW280-28509 (REF)
-Y81.00
(REF)
3
(REF)

SECTION E-E (ZONE 11E SH4)
NO SCALE

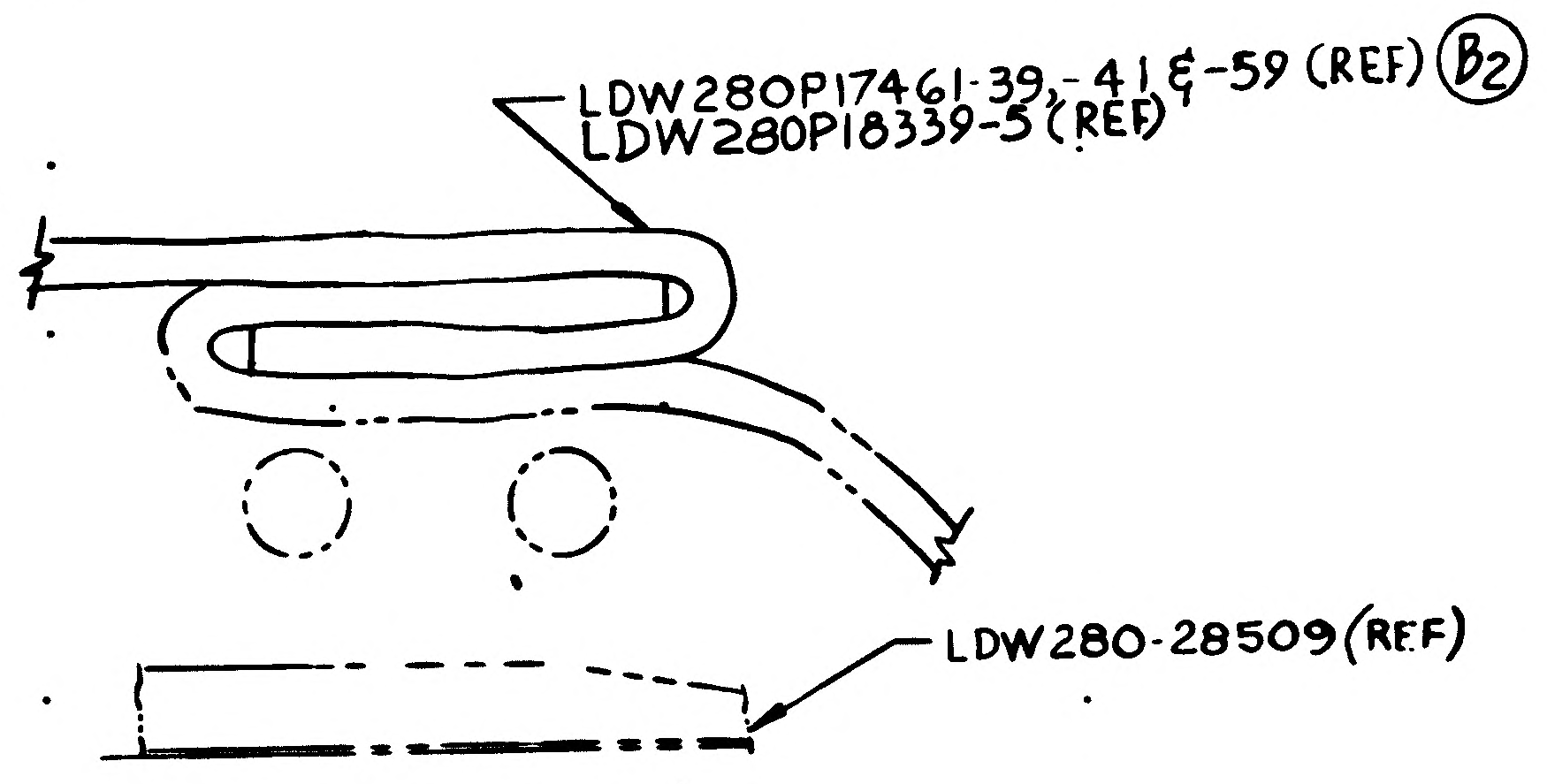
LDW280P17461-39, -41 & -59 (REF) (B2)
LDW280P18339-5 (REF)
LDW280-28509 (REF)

SECTION J-J (ZONE 6D SH4)
NO SCALE

02/03

NAS 9-1100

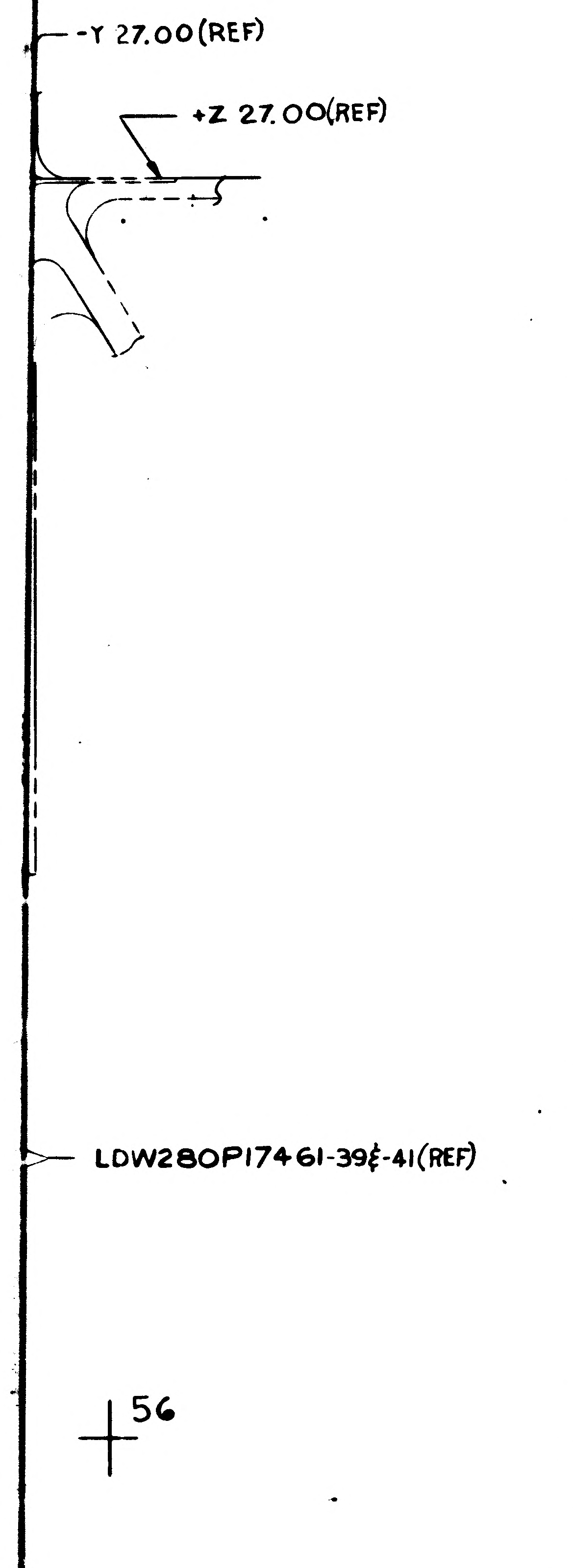
-Y 27.00 (REF)
+Z 27.00 (REF)
LDW280P17461-39 & -41 (REF)
+56

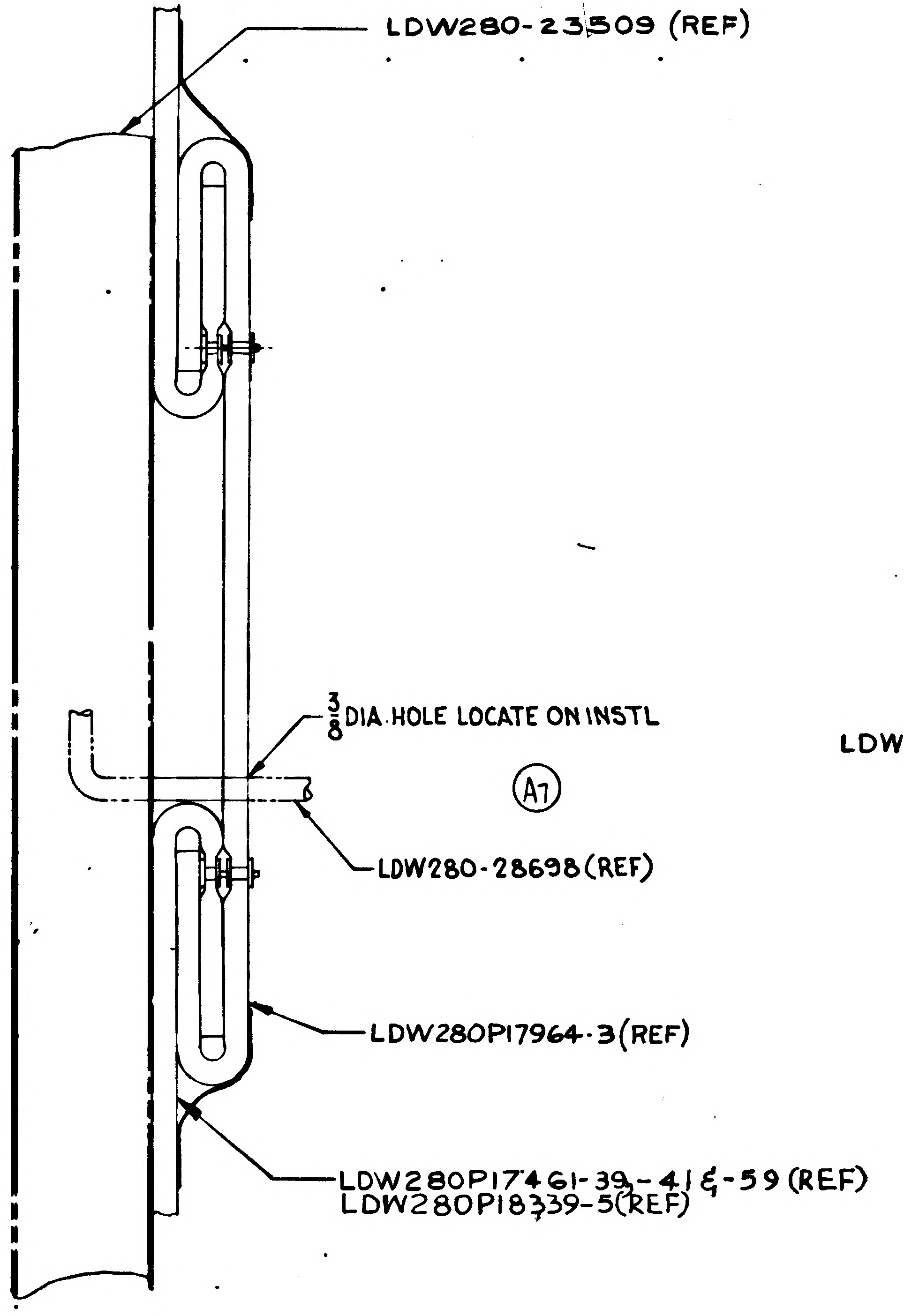
LDW280-23509 (REF)
3/8 DIA HOLE LOCATE ON INSTL
LDW280-28698 (REF)
LDW280P17964-3 (REF)
LDW280P17461-39, -41 & -59 (REF)
LDW280P18339-5 (REF)
A7

SECTION F-F (ZONE 9E, SH4)
NO SCALE
Ⓐ4

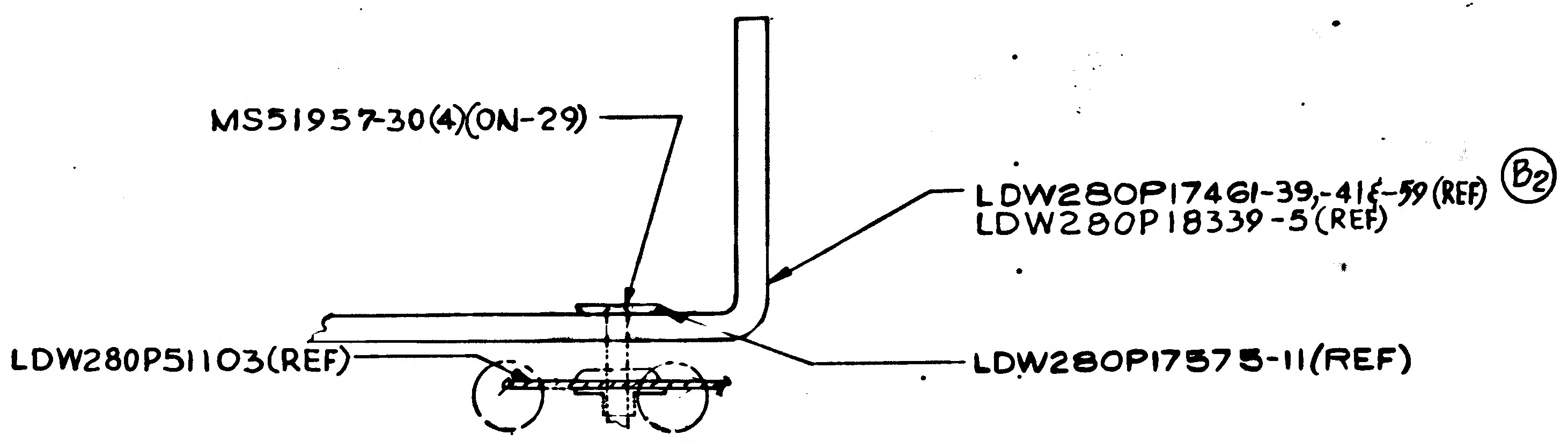
MS51957-30(4)(ON-29)
LDW280P17461-39, -41 & -59 (REF) B2
LDW280P18339-5 (REF)
LDW280P51103 (REF)
LDW280P17575-11 (REF)

Ⓐ7 SECTION G-G (ZONE 6D, SH4 & 6B SH3)
NO SCALE
Ⓐ4

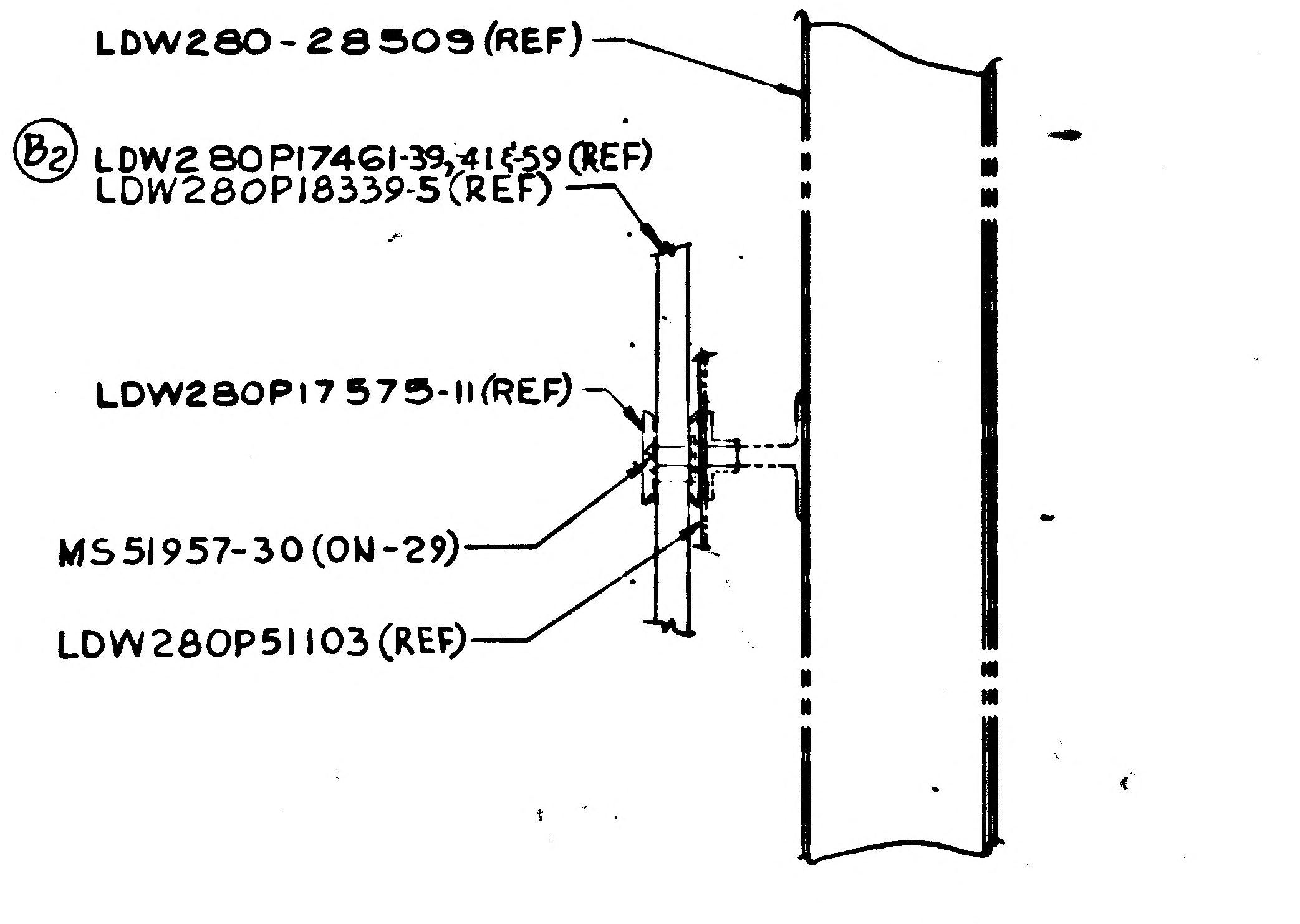
LDW280-28509 (REF)
B2 LDW280P17461-39, 41 & 59 (REF)
LDW280P18339-5 (REF)
LDW280P17575-11 (REF)
MS51957-30 (ON-29)
LDW280P51103 (REF)

SECTION H-H (ZONE 8F SH4)
NO SCALE

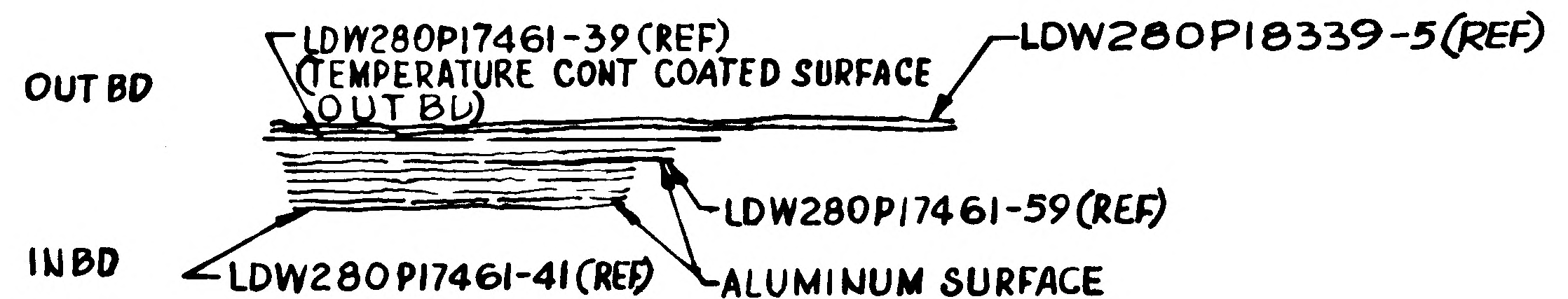
OUT BD
LDW280P17461-39 (REF)
(TEMPERATURE CONT COATED SURFACE OUT BD)
LDW280P18339-5 (REF)
LDW280P17461-59 (REF)
INBD
LDW280P17461-41 (REF)
ALUMINUM SURFACE (POS)

Ⓑ2 SECTION AK-AK (ZONE 9E, SH 4)
(NO SCALE)

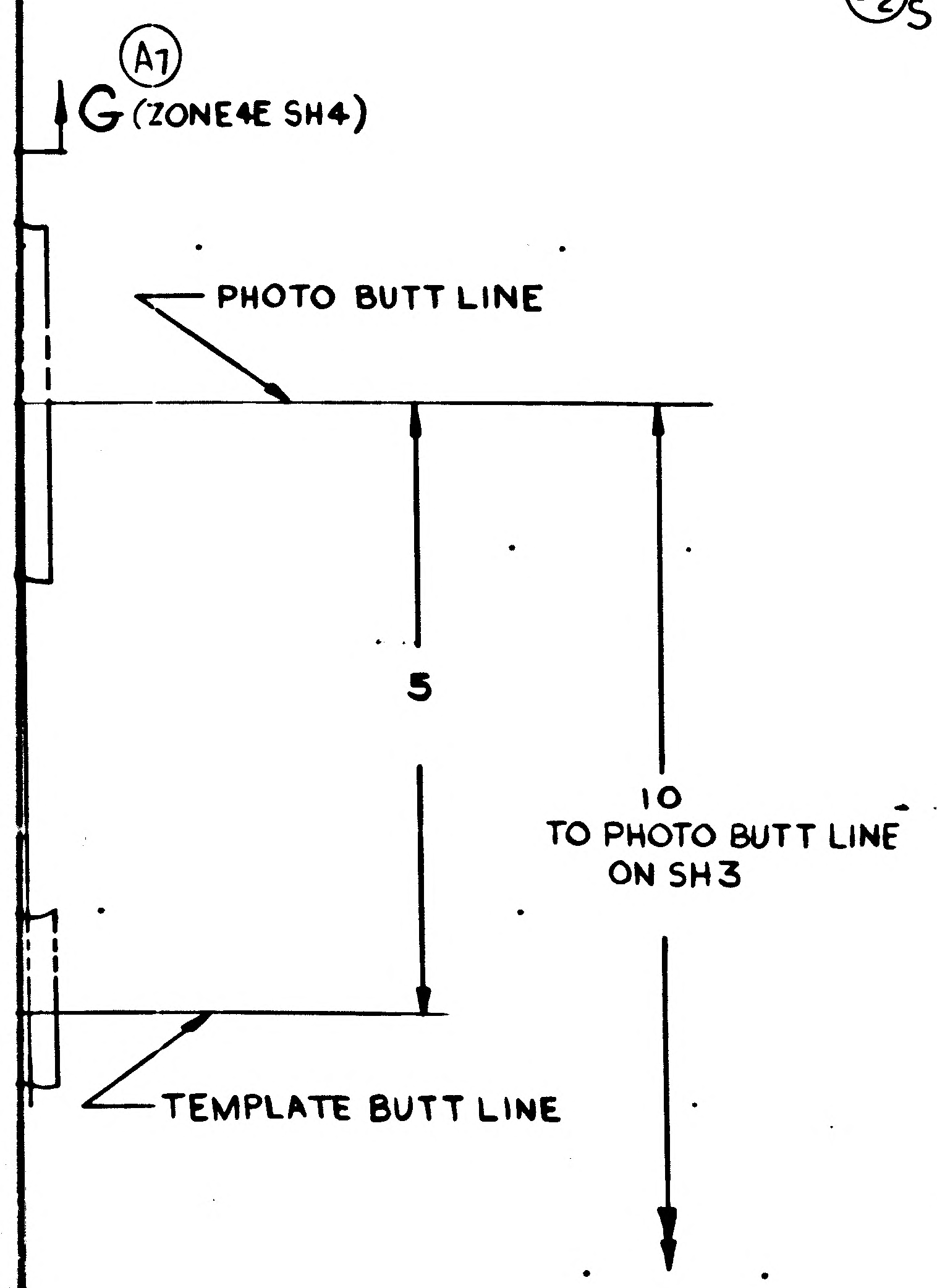
A7
G (ZONE 4E SH4)
PHOTO BUTT LINE
5
10
TO PHOTO BUTT LINE
ON SH3
TEMPLATE BUTT LINE

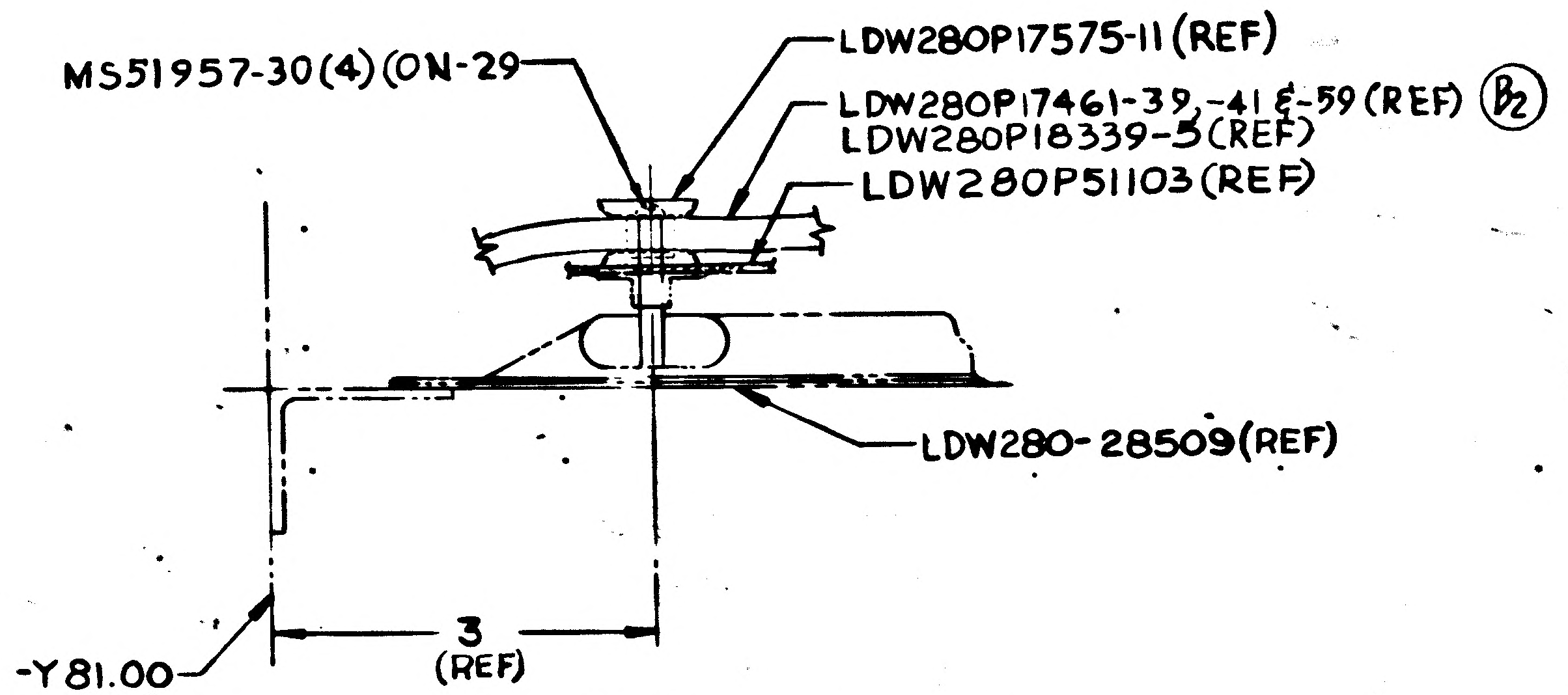
MS51957-30(4) (ON-29)
LDW280P17575-11 (REF)
LDW280P17461-39, -41 & -59 (REF) B2
LDW280P18339-5 (REF)
LDW280P51103 (REF)
LDW280-28509 (REF)
-Y 81.00 (REF)
3 (REF)

SECTION E-E (ZONE 11E SH4)
NO SCALE

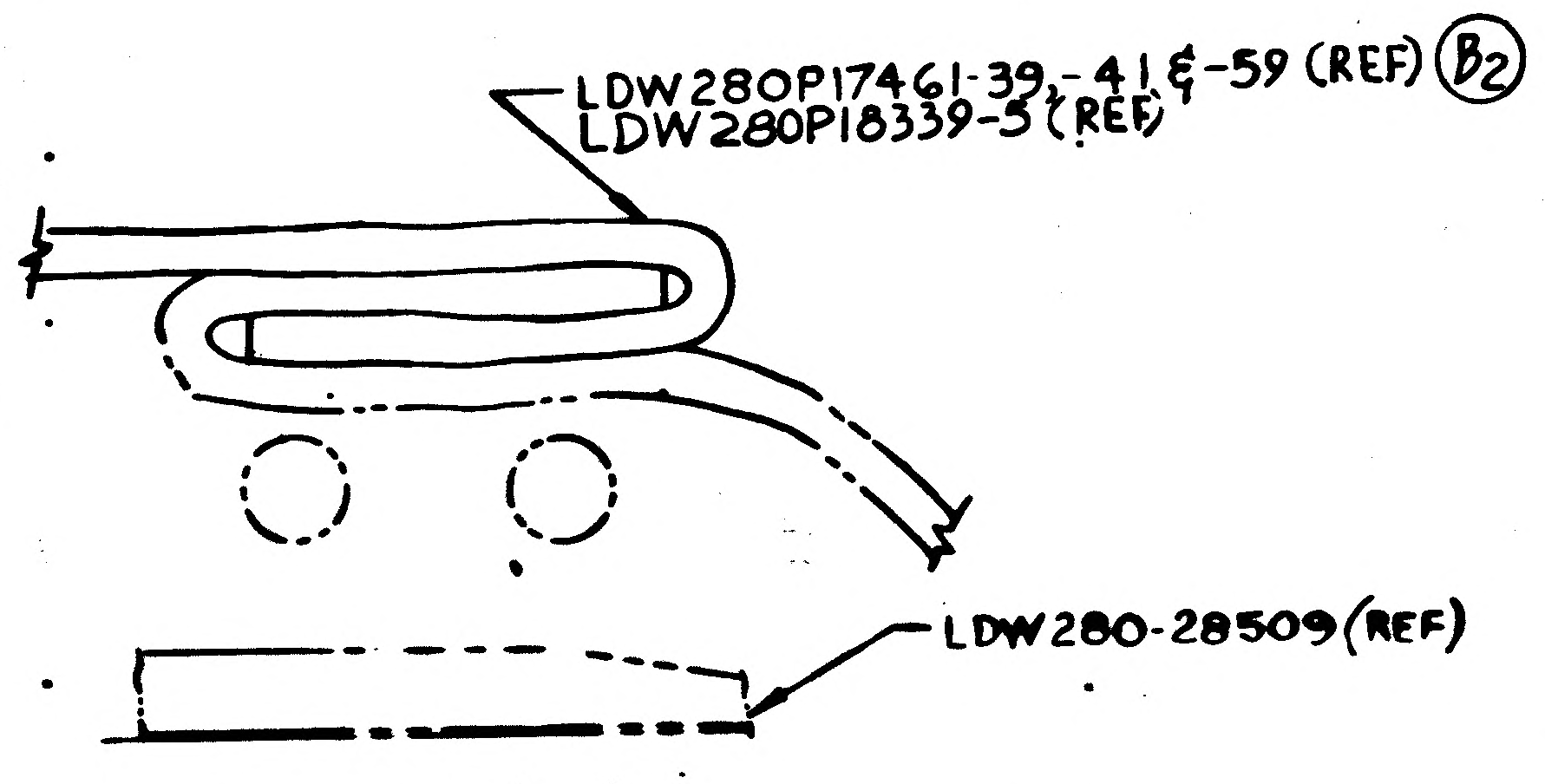
LDW280P17461-39, -41 & -59 (REF) B2
LDW280P18339-5 (REF)
LDW280-28509 (REF)

SECTION J-J (ZONE 6D SH4)
NO SCALE

MANUFACTURING OPERATIONS

UNLESS OTHERWISE SPECIFIED NOTES CHECKED √ APPLY TO THIS DWG.

- PART NUMBER AND ALL OTHER MARKINGS IN REGION MARKED ☒ USE BOTH SIDES IF NECESSARY.
- FILLET AND INSIDE CORNER RADII TOLERANCES .016R TO .062R ± .000 .063R TO .250R ± .015 OVER .250R ± .030
- DEPTH SHOWN FOR TAPPED HOLES IS FULL THDS. 2-3 IMP THDS. BEYOND PERMISSIBLE.
- EXTERNAL THREAD LENGTH SHOWN INCLUDES 2 IMPERFECT THREADS MAX.
- DO NOT CADMIUM PLATE & PRINT HOLES OR SURFACES MARKED WITH DOUBLE ASTERISK.
- MISMATCH STEP OF ± .005 PERMISSIBLE DUE TO CHANGE OF CUTTERS AT INSIDE INTERSECTING SURFACES.
- DIAMETERS MARKED MUST BE CONCENTRIC WITHIN FULL INDICATOR READING
- HOLES MUST BE KEPT FREE OF CHROME PLATING SOLUTION.
- ALL DIMENSIONS SHOWN TO BE MET AFTER CADMIUM PLATING. THICKNESS OF PLATE .0003 MIN. TO .0005 MAX. MIN. THICKNESS TO BE .0002 ON THREADED AREAS. NO ALLOWANCE FOR PLATING IN HOLES
- 125√ SURFACE ROUGHNESS INCLUDING REAMED HOLES PER MIL-STD-10
- 250√ FOR ALL DRILLED HOLES
- REMOVE ALL BURRS. BREAK ALL EDGES .015-.030
- INSPECTION INFORMATION MINIMUM PERMISSIBLE AVERAGE EDGE DISTANCE MARKED IS
- SYMBOL √ DENOTES SURFACE TO BE MACHINED
- UNLESS OTHERWISE SPECIFIED TOLERANCE ON FLANGES IS ± 1/32
- LENGTHS OF AN, NAS & MS AL ALY RIVETS SHORTER THAN 1 INCH ARE NOT SPECIFIED.
- TOLERANCE ON LOFTED DELINEATIONS IS

DWG SIZE 34 X 106
PRINTING INFO ONLY
FULL SIZE SHEET AREA (36 X 108) = 27 SQ. FT.
PRINT TRIM LINE

F
E
D

LDW280-51657 B
LDW280-51657 B

03/03
NAS 9-1100

LDW280-51657	SH	4

GRUMMAN AIRCRAFT ENGRG CORP., BETHPAGE, L. I., NEW YORK

SIZE	CODE IDENT NO.		
J	26512	LDW280-51657	B

LM
MODEL OR END ITEM
SCALE FULL (NOTED)
SHEET 4.00

FOR PHOTO REPRODUCTION

THIS IS AN ORIGINAL DWG

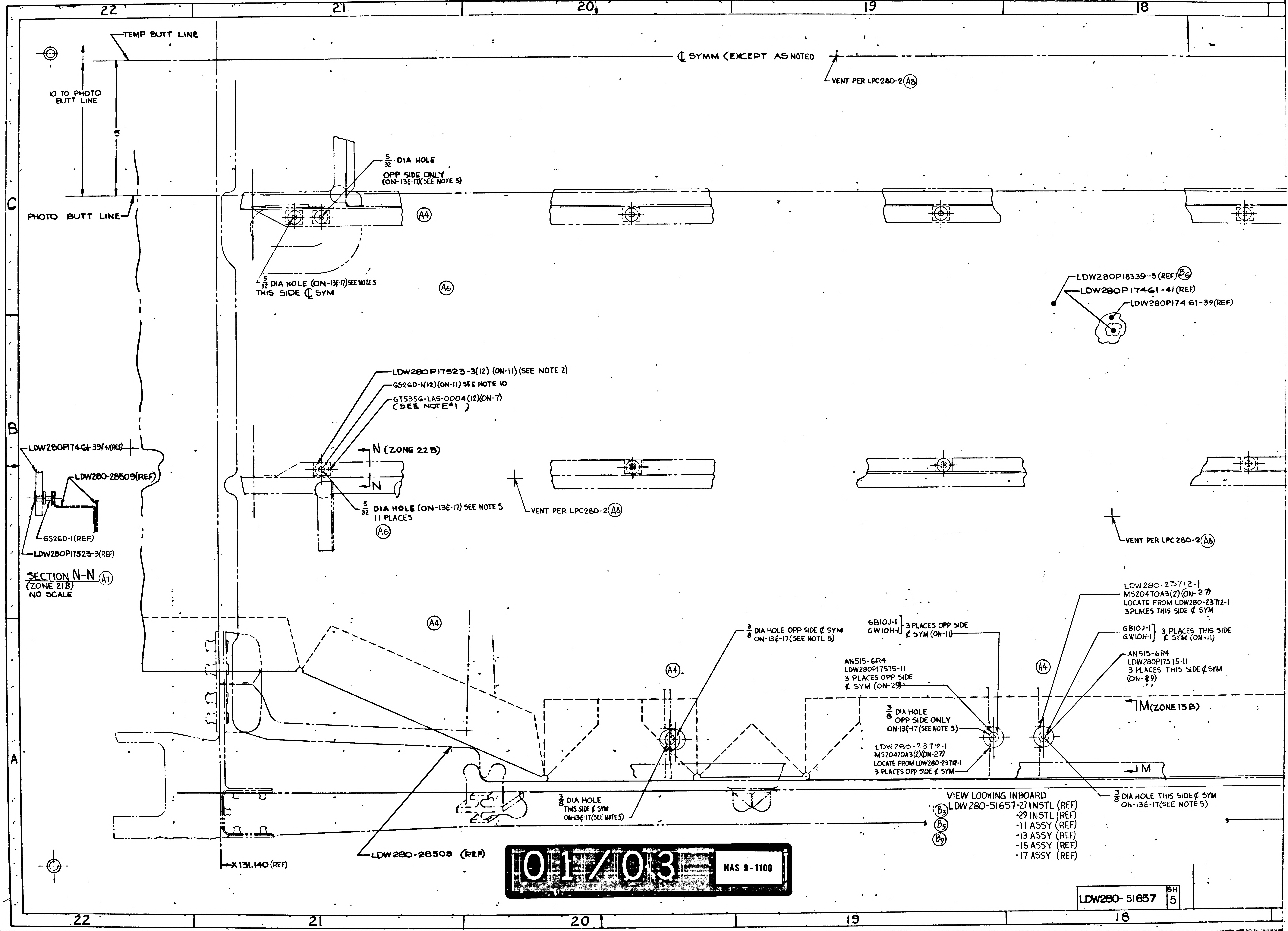
22
21
20
19
18
TEMP BUTT LINE
℄ SYMM (EXCEPT AS NOTED
VENT PER LPC280-2 (A8)
10 TO PHOTO BUTT LINE
5
5/32 DIA HOLE OPP SIDE ONLY (ON-13 & -17)(SEE NOTE 5)
C
PHOTO BUTT LINE
(A4)
5/32 DIA HOLE (ON-13&-17) SEE NOTE 5 THIS SIDE ℄ SYM
(A6)
LDW280P18339-5(REF) (B6)
LDW280P17461-41(REF)
LDW280P17461-39(REF)
LDW280P17523-3(12) (ON-11) (SEE NOTE 2)
GS26D-1(12)(ON-11) SEE NOTE 10
GT535G-LAS-0004(12)(ON-7) (SEE NOTE #1)
B
LDW280P1746-39&41(REF)
LDW280-28509(REF)
N (ZONE 22B)
N
GS26D-1(REF)
LDW280P17523-3(REF)
5/32 DIA HOLE (ON-13&-17) SEE NOTE 5 11 PLACES
(A6)
VENT PER LPC280-2 (A8)
VENT PER LPC280-2 (A8)
SECTION N-N (A7)
(ZONE 21B)
NO SCALE
(A4)
LDW280-23712-1
MS20470A3(2)(ON-27)
LOCATE FROM LDW280-23712-1
3 PLACES THIS SIDE ℄ SYM
3/8 DIA HOLE OPP SIDE ℄ SYM ON-13&-17(SEE NOTE 5)
GB10J-1 GW10H-1 3 PLACES OPP SIDE ℄ SYM (ON-11)
GB10J-1 GW10H-1 3 PLACES THIS SIDE ℄ SYM (ON-11)
AN515-6R4
LDW280P17575-11
3 PLACES OPP SIDE ℄ SYM (ON-29)
AN515-6R4
LDW280P17575-11
3 PLACES THIS SIDE ℄ SYM (ON-29)
(A4)
(A4)
M (ZONE 13B)
3/8 DIA HOLE OPP SIDE ONLY ON-13&-17 (SEE NOTE 5)
LDW280-23712-1
MS20470A3(2)(ON-27)
LOCATE FROM LDW280-23712-1
3 PLACES OPP SIDE ℄ SYM
M
A
3/8 DIA HOLE THIS SIDE ℄ SYM ON-13&-17(SEE NOTE 5)
3/8 DIA HOLE THIS SIDE ℄ SYM ON-13&-17(SEE NOTE 5)
VIEW LOOKING INBOARD
(B3) LDW280-51657-27 INSTL (REF)
(B5) -29 INSTL (REF)
(B9) -11 ASSY (REF)
-13 ASSY (REF)
-15 ASSY (REF)
-17 ASSY (REF)
X131.140 (REF)
LDW280-28509 (REF)
01/03
NAS 9-1100
LDW280-51657 SH 5

18
17
16
15
14
TEMP BUTT LINE
10 TO PHOTO BUTT LINE
5
PHOTO BUTT LINE
90
30
LDW280P17461-
LDW280P18339-
LDW280P17575-11(REF)
AN515-6R4 (REF)
A7
SECTION M-M
(NO SCA
LDW280P18339-5(REF) B6
LDW280P17461-41(REF)
LDW280P17461-39(REF)
VENT PER LPC 280-2 THIS SIDE ¢ SYM ONLY A8
VENT PER LPC280-2 OPP SIDE ONLY
72
VENT PER LPC280-2 A8
LDW280-23712-1
MS20470A3(2)(ON-27)
LOCATE FROM LDW280-23712-1
3 PLACES THIS SIDE ¢ SYM
GB10J-1
GW10H-1
3 PLACES THIS SIDE ¢ SYM (ON-11)
AN515-6R4
LDW280P17575-11
3 PLACES THIS SIDE ¢ SYM (ON-29)
A4
3/8 DIA HOLE THIS SIDE ¢ SYM ON-13¢-17(SEE NOTE 5)
M(ZONE 13B)
3/8 DIA HOLE OPP SIDE ONLY ON-13¢-17(SEE NOTE 5)
A2 A4
X196.00 (REF)
M
3/8 DIA HOLE THIS SIDE ¢ SYM ON-13¢-17(SEE NOTE 5)
Z27.00(REF)
LDW280-51657 SH 5
LDW280-51657 SH 5
13

02/03 NAS 9-1100

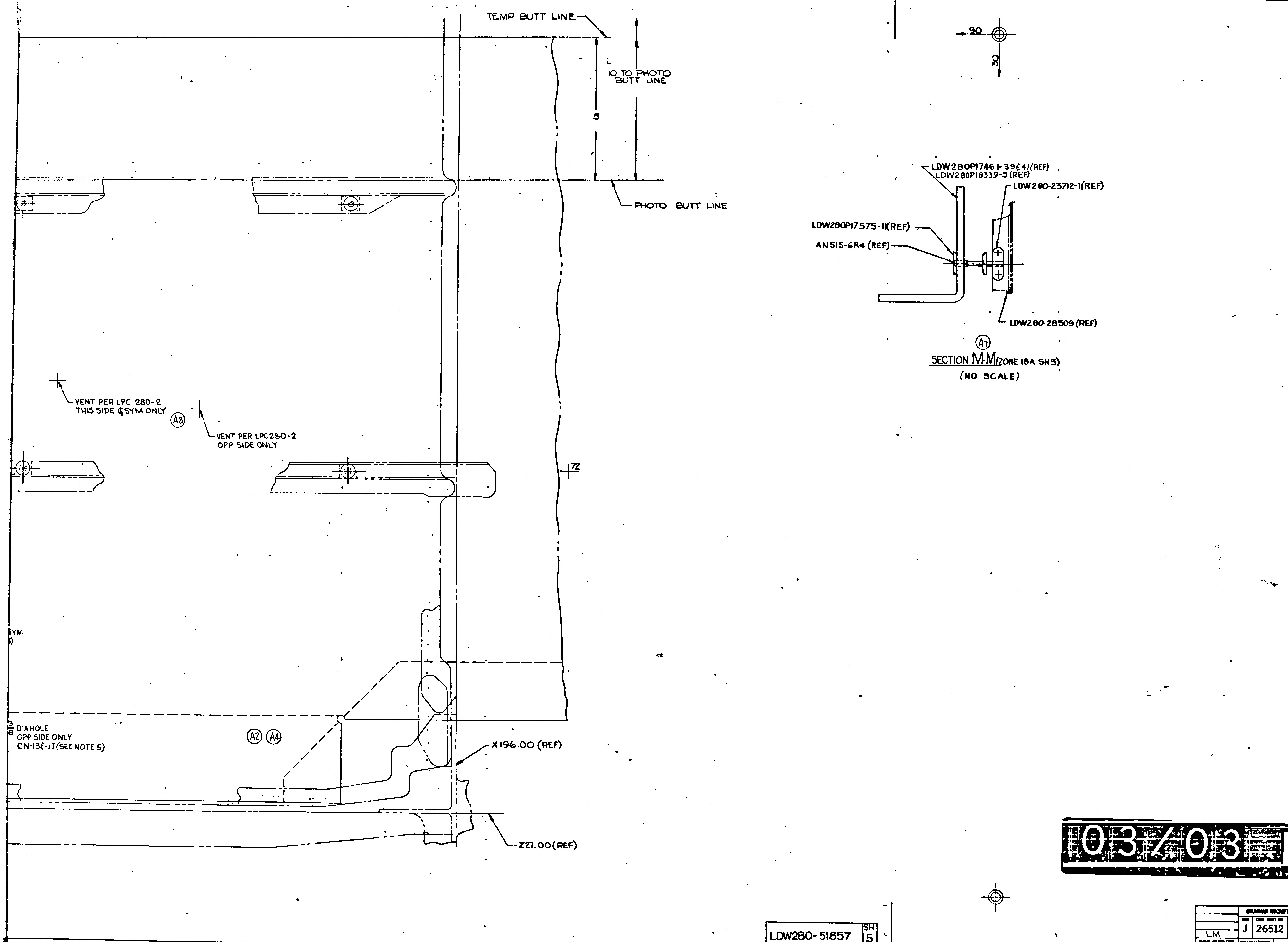
16
15
14
13
12
TEMP BUTT LINE
10 TO PHOTO BUTT LINE
5
PHOTO BUTT LINE
90
30
LDW280P1746 I-39 & 41(REF)
LDW280P18339-5 (REF)
LDW280-23712-1(REF)
LDW280P17575-11(REF)
AN515-6R4 (REF)
LDW280-28509 (REF)
A7
SECTION M-M(ZONE 18A SH5)
(NO SCALE)
VENT PER LPC 280-2
THIS SIDE ¢ SYM ONLY
A8
VENT PER LPC280-2
OPP SIDE ONLY
72
SYM
3/8 DIA HOLE
OPP SIDE ONLY
ON-13 & 17 (SEE NOTE 5)
A2
A4
X196.00 (REF)
Z27.00(REF)
C
B
A

MANUFACTURING OPERATIONS

UNLESS OTHERWISE SPECIFIED
NOTES CHECKED ✓ APPLY TO THIS DWG.

PART NUMBER
AND ALL OTHER MARKINGS
IN REGION MARKED ▭
USE BOTH SIDES IF NECESSARY.

FILLET AND INSIDE CORNER
RADII TOLERANCES
.015R TO .062R ± .010
.063R TO .250R ± .015
OVER .250R ± .030

DEPTH SHOWN FOR TAPPED
HOLES IS FULL THDS. 2-3 IMP THDS.
BEYOND PERMISSIBLE.

EXTERNAL THREAD LENGTH
SHOWN INCLUDES
2 IMPERFECT THREADS MAX.

DO NOT CADMIUM PLATE & PAINT
HOLES OR SURFACES MARKED
WITH DOUBLE ASTERISK.

MISMATCH STEP OF ± .005
PERMISSIBLE DUE TO CHANGE
OF CUTTERS AT INSIDE
INTERSECTING SURFACES.

DIAMETERS MARKED
MUST BE CONCENTRIC WITHIN
FULL INDICATOR
READING

HOLES MUST BE KEPT FREE OF
CHROME PLATING SOLUTION.

ALL DIMENSIONS SHOWN TO BE MET
AFTER CADMIUM PLATING.
THICKNESS OF PLATE .0003 MIN.
TO .0005 MAX. MIN. THICKNESS TO
BE .0002 ON THREADED AREAS.
NO ALLOWANCE FOR PLATING IN
HOLES

125 √ SURFACE ROUGHNESS
INCLUDING REAMED HOLES
PER MIL-STD-10

200 √ FOR ALL DRILLED HOLES

REMOVE ALL BURRS.
BREAK ALL EDGES .005-.030

INSPECTION INFORMATION
MINIMUM PERMISSIBLE
AVERAGE EDGE DISTANCE
MARKED IS

SYMBOL ∫ DENOTES SURFACE
TO BE MACHINED

UNLESS OTHERWISE SPECIFIED
TOLERANCE ON FLANGES IS ± 1/32

LENGTHS OF AN, NAS & MS AL ALY
RIVETS SHORTER THAN 1 INCH ARE
NOT SPECIFIED.

TOLERANCE ON LOFTED
DELINEATIONS IS

DWG SIZE 34 X 106
PRINTING INFO
FULL SIZE SHEET AP
PRINT TRIM LINE

03/03

NAS 9-1100

LDW280-51657 B

LDW280-51657 SH 5

GRUMMAN AIRCRAFT ENGRG CORP., BETHPAGE, L. I., NEW YORK

LM

SIZE J
CODE IDENT NO. 26512
LDW280- 51657 B

SCALE FULL/NOTED
SHEET 5.00

THIS IS AN ORIGINAL DRAWING

FOR PHOTO REPRODUCTION

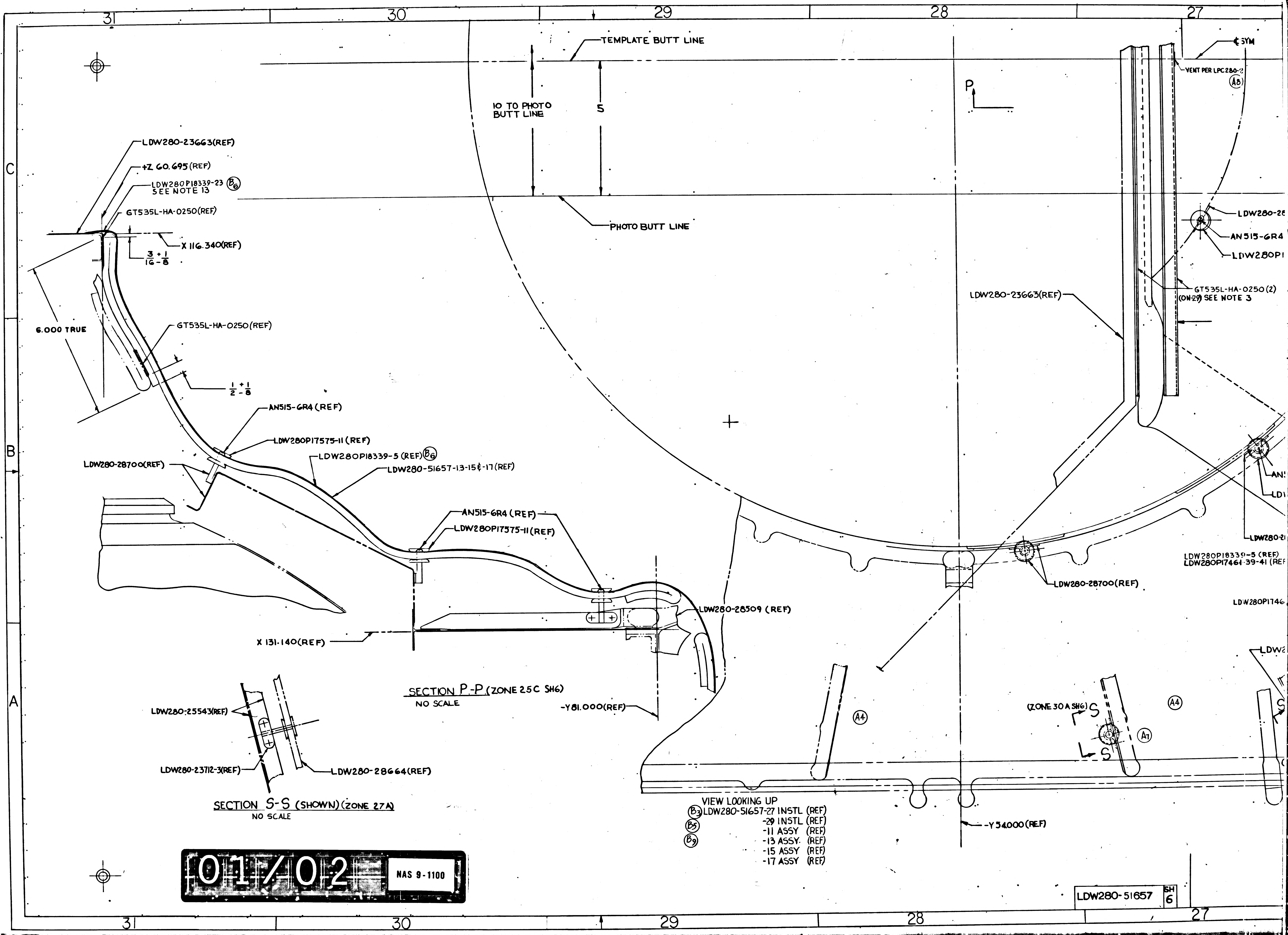
31
30
29
28
27
C
B
A
TEMPLATE BUTT LINE
¢ SYM
VENT PER LPC280-1
A8
10 TO PHOTO BUTT LINE
5
P
PHOTO BUTT LINE
LDW280-23663(REF)
+Z 60.695 (REF)
LDW280P18339-23 B6 SEE NOTE 13
GT535L-HA-0250(REF)
X 116.340(REF)
3/16 + 1/8 -
6.000 TRUE
GT535L-HA-0250(REF)
1/2 + 1/8 -
AN515-6R4 (REF)
LDW280P17575-11 (REF)
LDW280P18339-5 (REF) B6
LDW280-51657-13-15 & -17 (REF)
LDW280-28700(REF)
AN515-6R4 (REF)
LDW280P17575-11(REF)
LDW280-28509 (REF)
X 131.140(REF)
-Y81.000(REF)
LDW280-28
AN515-6R4
LDW280P1
GT535L-HA-0250 (2) (ON-29) SEE NOTE 3
LDW280-23663(REF)
AN
LD
LDW280-2
LDW280P18339-5 (REF)
LDW280P17461-39-41 (REF)
LDW280-28700(REF)
LDW280P1746
LDW2
A4
A4
(ZONE 30 A SH6) S
S
A7
LDW280-25543(REF)
LDW280-23712-3(REF)
LDW280-28664(REF)
-Y 54.000(REF)

SECTION P-P (ZONE 25C SH6)
NO SCALE

SECTION S-S (SHOWN) (ZONE 27A)
NO SCALE

VIEW LOOKING UP
B3 LDW280-51657-27 INSTL (REF)
B5 -29 INSTL (REF)
B9 -11 ASSY (REF)
-13 ASSY (REF)
-15 ASSY (REF)
-17 ASSY (REF)

01/02 NAS 9-1100

LDW280-51657 SH 6

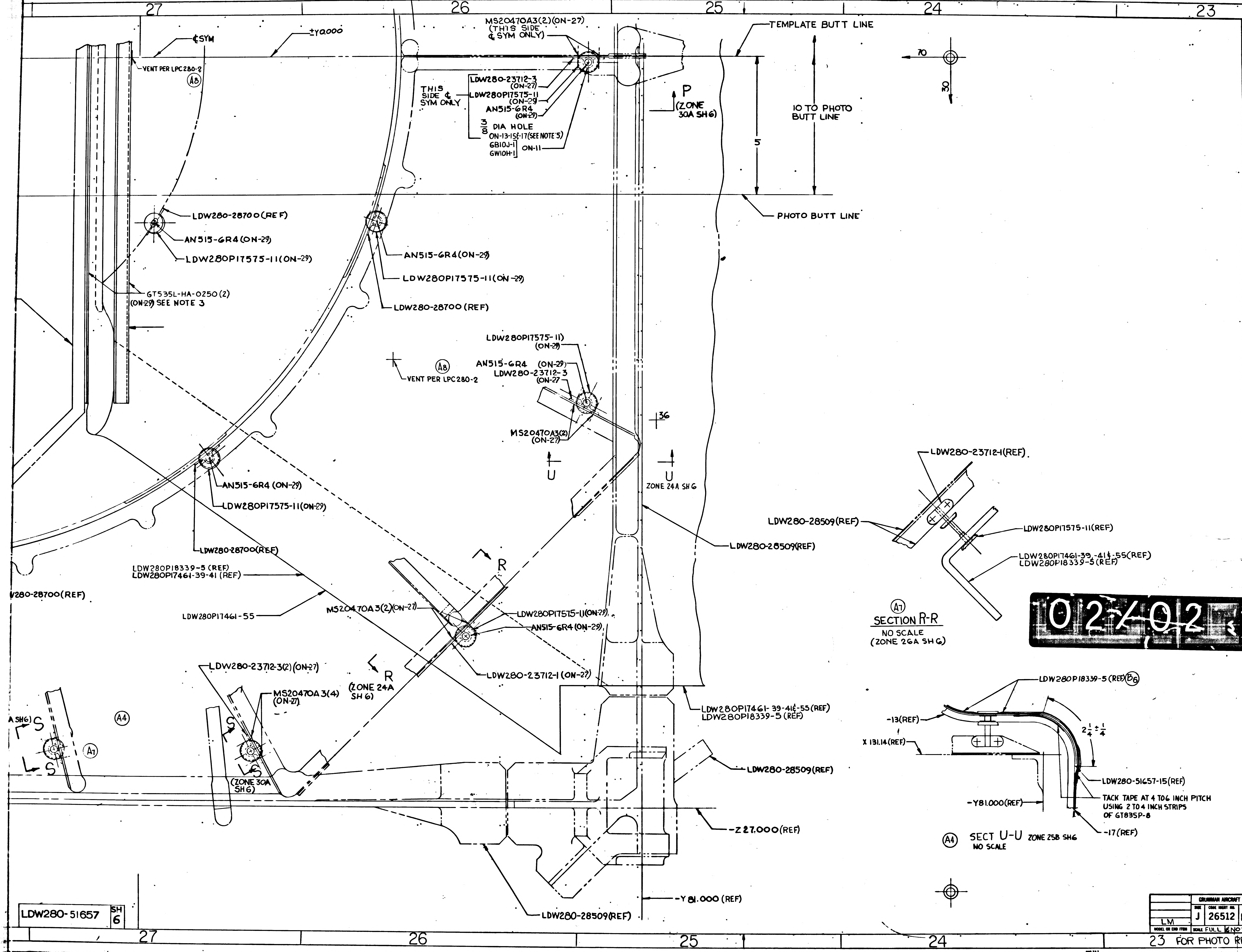
27
26
25
24
23
C
B
A
¢SYM
±Y0.000
VENT PER LPC280-2
A8
MS20470A3(2)(ON-27)
(THIS SIDE
¢ SYM ONLY)
THIS SIDE ¢ SYM ONLY
LDW280-23712-3 (ON-27)
LDW280P17575-11 (ON-29)
AN515-6R4 (ON-29)
3/8 DIA HOLE
ON-13-15-17(SEE NOTE 5)
6B10J-1
GW10H-1
ON-11
TEMPLATE BUTT LINE
P
(ZONE 30A SH6)
10 TO PHOTO BUTT LINE
5
PHOTO BUTT LINE
70
30
LDW280-28700(REF)
AN515-6R4(ON-29)
LDW280P17575-11(ON-29)
AN515-6R4(ON-29)
LDW280P17575-11(ON-29)
LDW280-28700 (REF)
GT535L-HA-0250 (2)
(ON-29) SEE NOTE 3
A8
VENT PER LPC280-2
LDW280P17575-11)
(ON-29)
AN515-6R4 (ON-29)
LDW280-23712-3
(ON-27)
MS20470A3(2)
(ON-27)
36
U
U
ZONE 24A SH6
AN515-6R4 (ON-29)
LDW280P17575-11(ON-29)
LDW280-28700(REF)
LDW280P18339-5 (REF)
LDW280P17461-39-41 (REF)
LDW280-28700(REF)
LDW280P17461-55
R
MS20470A3(2)(ON-27)
LDW280P17575-11(ON-29)
AN515-6R4 (ON-29)
LDW280-23712-1 (ON-27)
LDW280-28509(REF)
LDW280-23712-3(2)(ON-27)
MS20470A3(4)
(ON-27)
R
(ZONE 24A SH 6)
A SH6)
S
S
A4
A7
S
S
(ZONE 30A SH6)
LDW280P17461-39-41&-55(REF)
LDW280P18339-5 (REF)
LDW280-28509(REF)
-Z27.000(REF)
-Y81.000 (REF)
LDW280-28509(REF)
LDW280-23712-1(REF)
LDW280-28509(REF)
LDW280P17575-11(REF)
LDW280P17461-39,-41&-55(REF)
LDW280P18339-5 (REF)
A7
SECTION R-R
NO SCALE
(ZONE 26A SH6)
LDW280P18339-5 (REF) B6
-13(REF)
X 131.14(REF)
2 1/4 ± 1/4
LDW280-51657-15(REF)
TACK TAPE AT 4 TO 6 INCH PITCH
USING 2 TO 4 INCH STRIPS
OF GT835P-8
-Y81.000(REF)
-17(REF)
A4
SECT U-U ZONE 25B SH6
NO SCALE
02/02
NAS 9-1100
LDW280-51657 B
LDW280-51657 B
LDW280-51657 SH 6

MANUFACTURING OPERATIONS
UNLESS OTHERWISE SPECIFIED
NOTES CHECKED ✓ APPLY TO THIS DWG.

PART NUMBER
AND ALL OTHER MARKINGS
IN REGION MARKED
USE BOTH SIDES IF NECESSARY.

FILLET AND INSIDE CORNER
RADII TOLERANCES
.016R TO .062R ± .000
.063R TO .250R ± .015
OVER .250R ± .030

DEPTH SHOWN FOR TAPPED
HOLES IS FULL THDS. 2-3 IMP THDS.
BEYOND PERMISSIBLE.

EXTERNAL THREAD LENGTH
SHOWN INCLUDES
2 IMPERFECT THREADS MAX.

DO NOT CADMIUM PLATE & PAINT
HOLES OR SURFACES MARKED
WITH DOUBLE ASTERISK.

MISMATCH STEP OF ± .005
PERMISSIBLE DUE TO CHANGE
OF CUTTERS AT INSIDE
INTERSECTING SURFACES.

DIAMETERS MARKED
MUST BE CONCENTRIC WITHIN
FULL INDICATOR
READING

HOLES MUST BE KEPT FREE OF
CHROME PLATING SOLUTION.

ALL DIMENSIONS SHOWN TO BE MET
AFTER CADMIUM PLATING.
THICKNESS OF PLATE .0003 MIN.
TO .0005 MAX. MIN. THICKNESS TO
BE .0002 ON THREADED AREAS.
NO ALLOWANCE FOR PLATING IN
HOLES

125 SURFACE ROUGHNESS
INCLUDING REAMED HOLES
PER MIL-STD-10

250 FOR ALL DRILLED HOLES

REMOVE ALL BURRS.
BREAK ALL EDGES .015-.031

INSPECTION INFORMATION
MINIMUM PERMISSIBLE
AVERAGE EDGE DISTANCE
MARKED IS

SYMBOL ƒ DENOTES SURFACE
TO BE MACHINED

UNLESS OTHERWISE SPECIFIED
TOLERANCE ON FLANGES IS ± 1/32

LENGTHS OF AN, NAS & MS AL ALY
RIVETS SHORTER THAN 1 INCH ARE
NOT SPECIFIED.

TOLERANCE ON LOFTED
DELINEATIONS IS

DWG SIZE 34 X 88

PRINTING NAVD ONLY

GRUMMAN AIRCRAFT ENGRG CORP., BETHPAGE, L. I., NEW YORK

MODEL OR END ITEM	SIZE	CODE IDENT NO.		
LM	J	26512	LDW280-51657	B ⑧
SCALE FULL & NOTED			SHEET 6.00	

FOR PHOTO REPRODUCTION

THIS IS AN ORIGINAL DRAWING

ENG 32.1 REV 3-65

LIAISON ENGINEERING #5

GRUMMAN AIRCRAFT ENGINEERING CORP.
CODE IDENT NO. 26512
ENGINEERING ORDER

DWG. NO. LDW280-51657
EO NO. A3
CONTROL INFO NO. LEM-5-9011

THIS EO IS A REVISION OF A2

IN EFFECTIVITY BLOCK ADD:
LEM-2 (32), LEM-3(33)

5

DETAIL SPEC REQ	☐	CL II ENGRG CHG	☐	CL I ENGRG CHG	☐

REASON FOR EO: EFFECTIVITY OF A2 INCOMPLETE

DESCRIPTION OF EO: IN EFF BLK ADDED LEM-2, LEM-3

Ⓔ GAEC C EO RELEASE: 6

MODEL	EFFECTIVITY		
	PROCURING ACTIVITY NO.	GAEC UNIT NO.	SUB CONTR UNIT NO.
LEM		–	
		LEM-2(32)	
		LEM-3(33)	

DRAWING CHANGE REQD		DISPOSITION OF PARTS	
REVISE DWG	RECORD EO	REWORK	SCRAP
✓		✓	

APPROVED BY						CH		
DATE	9-5	9/8				8-24-66	8-30-66	?-25-66
8-24-66	WJ	~~SUPPORT~~ VDI	~~RELIAB. GROUP~~	GROUP LEADER	STRESS GROUP	LIAISON ENGRG	PROJ ENGRG	~~GOVT~~

PRIORITY	DRAWING TITLE	DRAWING NO.	EO NO.
C	STANDOFF INSTL - D/S - L.H. THERMAL	LDW280-51657	A3

ISSUED BY LIAISON - R. HUBER X6452 SECTION VDI GROUP NO. 335 PL 35

01

NAS 9-1100

ENG 32.1 REV 3-65

GRUMMAN AIRCRAFT ENGINEERING CORP.
CODE IDENT NO. 26512
ENGINEERING ORDER

DWG. NO. LDW280-51657 EO NO. A5
CONTROL INFO NO. LDW280A-4309

ON-11, & -21 REMOVE LDW280P17524-1

ON-9 LDW280P17964-3 WAS LDW280P17964-7; 3 PLCS

THERMAL SHLD.

2

DETAIL SPEC REQ		CL II ENGRG CHG		CL I ENGRG CHG	

REASON FOR EO
TO MAKE DWG AGREE WITH TEMPLATE

DESCRIPTION OF EO
ON-11 & -21 REMOVED LDW280P17524-1
ON-9 LDW280P17964-3 WAS LDW280P17964-7; 3PLCS

GAEC EO RELEASE
FR 12/13/6

MODEL	EFFECTIVITY		
	PROCURING ACTIVITY NO.	GAEC UNIT NO.	SUB CONTR UNIT NO.
LM		LM-1 (31)	
LM		THRU	
LM		LM-15 (45)	

DRAWING CHANGE REQD		DISPOSITION OF PARTS		APPROVED BY								
✓		NOT	REQ'D	DATE	12/13/64	12/18		12/16/64	12/13/64		12/13	12/13/64
REVISE DWG	RECORD EO	REWORK	SCRAP	1	VDI	~~SUPPORT~~ THERM	RELIAB. GROUP	GROUP LEADER	STRESS GROUP	LIAISON ENGRG	PROJ ENGRG	GOVT

PRIORITY	DRAWING TITLE	DRAWING NO.	EO NO.
C	STANDOFF INST'L D/S L.M THERMAL	LDW280-51657	A5

ISSUED BY AMBROSIO/STRAKOSCH 1153 SECTION VDI GROUP NO. 335 PL 35

01 NAS 9-1100

B

ENG 32.1 REV 3-65

*

GRUMMAN AIRCRAFT ENGINEERING CORP.
CODE IDENT NO. 26512
ENGINEERING ORDER

DWG. NO. LDW280 51657
EO NO. B1
CONTROL INFO NO. LM 5-11986

ON-7 ASSY

ADD LDW280-23712-7 ASSY & REMOVE LDW280P17572-23
PICK UP EXISTING FASTENERS. (TYP. 4 PLACES)

RELEASED BY LIAISON

DETAIL SPEC REQ	☐	CL II ENGRG CHG	☑	CL I ENGRG CHG	☐

5 C

REASON FOR EO: TO PREVENT BREAKAGE OF STANDOFFS

DESCRIPTION OF EO: ON-7 ASSY ADDED LDW280-23712-7 & REMOVED LDW280 P17572-23 (TYP. 4 PLACES)

GAEC EO RELEASE: JK

MODEL	EFFECTIVITY: PROCURING ACTIVITY NO.	EFFECTIVITY: GAEC UNIT NO.	EFFECTIVITY: SUB CONTR UNIT NO.
LM		LM1(31) THRU	15(45)

DRAWING CHANGE REQD: REVISE DWG	DRAWING CHANGE REQD: RECORD EO	DISPOSITION OF PARTS: REWORK	DISPOSITION OF PARTS: SCRAP
✓		✓	

	APPROVED BY			GROUP LEADER	STRESS GROUP	LIAISON ENGRG	PROJ ENGRG	GOVT
APPROVED BY	WT			~		CH		
DATE	3/10/67			~	3/15/67	3/1/67	3-22-67	3/15/67
3	VD1	SUPPORT	RELIAB. GROUP					

PRIORITY: C

DRAWING TITLE: SHIELD INST D/S LEFT HAND THERMAL

DRAWING NO.: LDW280-51657

EO NO.: B1

ISSUED BY DON RAGAS X6510 SECTION VD1 GROUP NO. 335 PL 5

01

NAS 9-1100

B

ENG 32.1 REV 3-65

GRUMMAN AIRCRAFT ENGINEERING CORP.
CODE IDENT NO. 26512
ENGINEERING ORDER

*

DWG. NO. LDW280-51657		EO NO. B2
CONTROL INFO NO. LDW280A5951		

IN F/D & B/M FOR -17 ADD LDW280P17461-59 BLANKET ASSY
FOR -25 ADD LDW280P17461-61 BLANKET ASSY
AS SHOWN

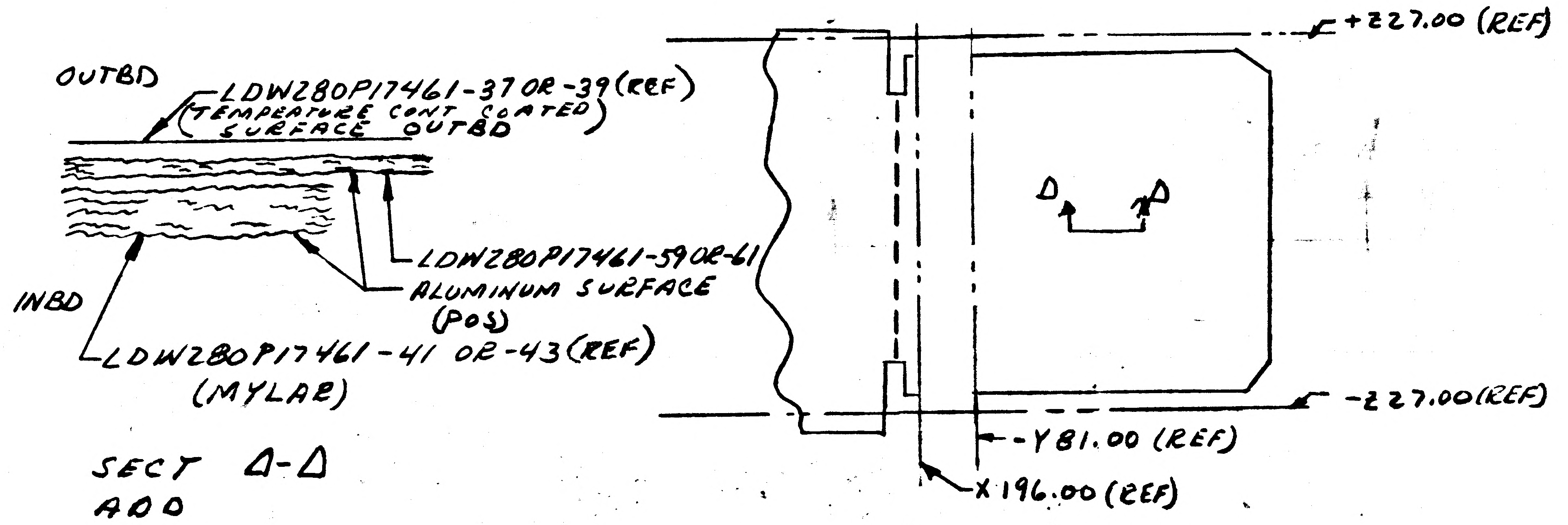

OUTBD
LDW280P17461-37 OR -39 (REF)
(TEMPERATURE CONT COATED SURFACE OUTBD)
LDW280P17461-59 OR -61
ALUMINUM SURFACE (POS)
INBD
LDW280P17461-41 OR -43 (REF)
(MYLAR)
+227.00 (REF)
-227.00 (REF)
-Y81.00 (REF)
X196.00 (REF)
Δ
Δ

SECT Δ-Δ
ADD

* REWORK AS SHOWN

Δ = NEXT AVAIL. LTR.

DETAIL SPEC REQ	☐	CL II ENGRG CHG	☑	CL I ENGRG CHG	☐	LCD19-1135	5

REASON FOR EO: ADDITIONAL THERMAL PROTECTION (LC R19-1135)

DESCRIPTION OF EO: IN F/D & B/M ADDED FOR -17 & -25 LDW280P17461-59 & 61 RESPECTIVELY

Ⓡ GAEC EO RELEASE C: JK 3/23/67

MODEL	EFFECTIVITY		
	PROCURING ACTIVITY NO.	GAEC UNIT NO.	SUB CONTR UNIT NO.
LM		LM-1(31)	
		THRU	
		LM-15(45)	

DRAWING CHANGE REQD		DISPOSITION OF PARTS		APPROVED BY								
✓		*		DATE	3/16/67	3/21/67		3/16/67	3/30/67		3/21/67	3-27-67
REVISE DWG	RECORD EO	REWORK	SCRAP	5	VDI	THERMO ~~SUPPORT~~	RELIAB. GROUP	GROUP LEADER	STRESS GROUP	LIAISON ENGRG	PROJ ENGRG	~~CGST~~

PRIORITY: C
DRAWING TITLE: STANDOFF INSTL DESCENT STAGE L.H. THERMAL
DRAWING NO.: LDW280-51657
EO NO.: B2

ISSUED BY H. PALLMEYER/J. STRAKOSCH SECTION VEH DES INT GROUP NO. 335 PL 25

01 NAS 9-1100

01

NAS 9-1100

ENG 32.2 REV 3-65

FITH

GRUMMAN AIRCRAFT ENGINEERING CORP.
CODE IDENT NO. 26512
ENGINEERING ORDER

DWG. NO. LDW280-51657
EO NO. B3
CONTROL INFO NO. LDW280 6704

IN M/B, B/M & FLD ADD -27 INSTL SAME AS -7 INSTL EXCEPT AS SHOWN N/A FOR -27 LDW280-51553 EFF LM-1. IN M/B FOR -7 REMOVE N/A LDW280-51553 EFF LM-1(31) ADD -29 BLANKET INSTL SAME AS -9 EXCEPT AS SHOWN, N/A LDW280-51553 EFF LM-1(31) IN M/B FOR -9 REMOVE N/A LDW280-51553 EFF LM-1(31)

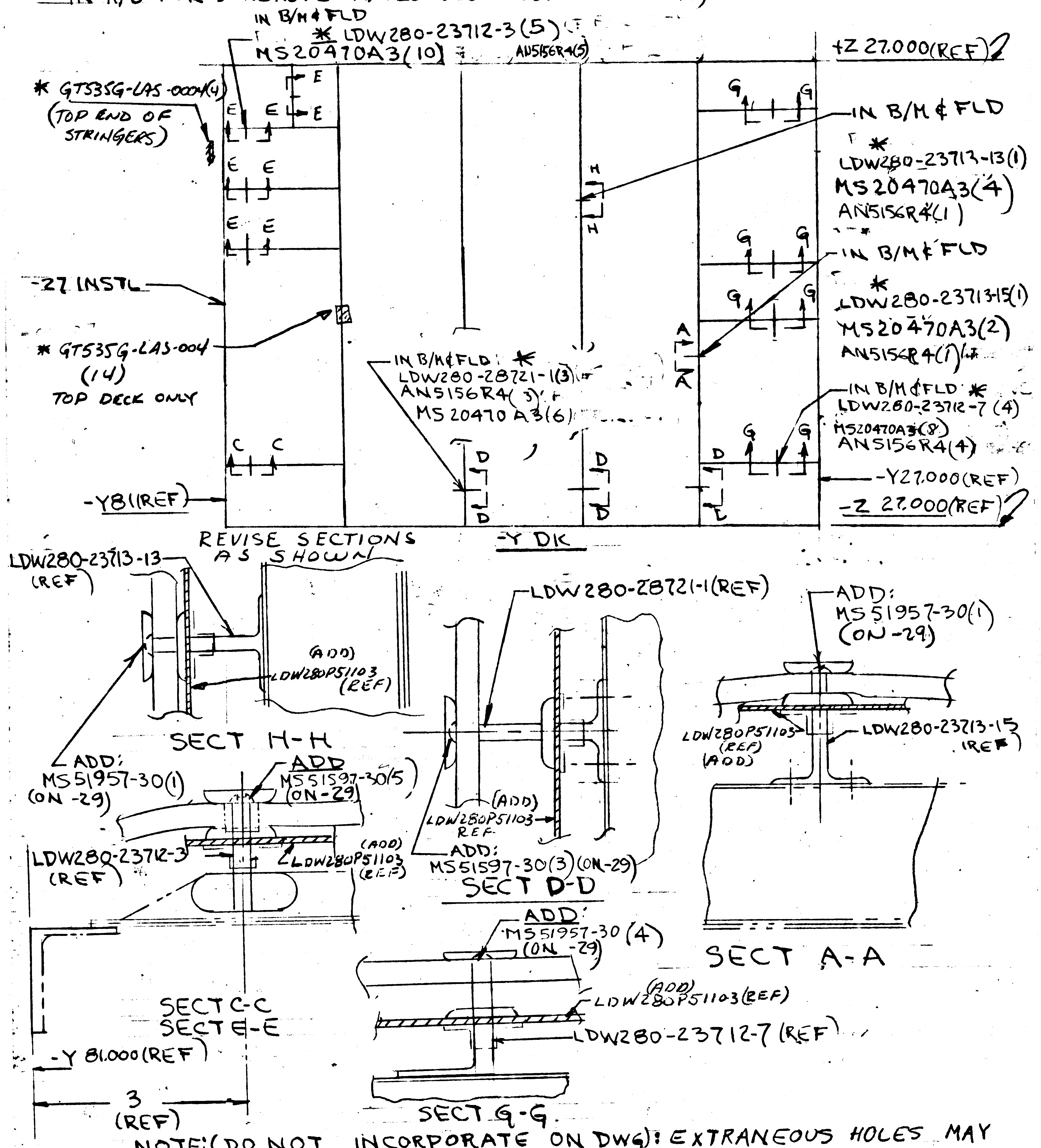
IN B/M & FLD
* LDW280-23712-3(5)
MS20470A3(10)
AN5156R4(5)
+Z 27.000(REF)
* GT535G-LAS-0004(4)
(TOP END OF STRINGERS)
E
G
H
IN B/M & FLD
* LDW280-23713-13(1)
MS20470A3(4)
AN5156R4(1)
IN B/M & FLD
* LDW280-23713-15(1)
MS20470A3(2)
AN5156R4(1)
-27 INSTL
* GT535G-LAS-004 (14)
TOP DECK ONLY
A
IN B/M & FLD *
LDW280-28721-1(3)
AN5156R4(3)
MS20470A3(6)
IN B/M & FLD *
LDW280-23712-7(4)
MS20470A3(8)
AN5156R4(4)
C
D
-Y81(REF)
-Y27.000(REF)
-Z 27.000(REF)
REVISE SECTIONS AS SHOWN
-Y DK
LDW280-23713-13 (REF)
(ADD) LDW280PS1103 (REF)
SECT H-H
ADD: MS51957-30(1) (ON -29)
ADD MS51597-30(5) (ON-29)
LDW280-23712-3 (REF)
(ADD) LDW280PS1103 (REF)
SECT C-C
SECT E-E
-Y 81.000(REF)
3 (REF)
LDW280-28721-1(REF)
(ADD) LDW280PS1103 REF
ADD: MS51597-30(3)(ON-29)
SECT D-D
ADD: MS51957-30(4) (ON -29)
(ADD) LDW280PS1103(REF)
LDW280-23712-7 (REF)
SECT G-G.
ADD: MS51957-30(1) (ON -29)
LDW280PS1103 (REF) (ADD)
LDW280-23713-15 (REF)
SECT A-A

NOTE: (DO NOT INCORPORATE ON DWG): EXTRANEOUS HOLES MAY BE LEFT OPEN. FOR CALLOUTS MARKED * DO NOT INCLUDE ON -27 & -29

DETAIL SPEC REQ		CL II ENGRG CHG	✓	CL I ENGRG CHG		LCD-1244

REASON FOR EO: TO PROVIDE FOR FITH SHIELD

DESCRIPTION OF EO: IN M/B, B/M & FLD ADDED -27 & -29 INSTL REMOVED LM-1(31) FROM -7 & -9

GAEC EO RELEASE: JK 5/2/7

MODEL	PROCURING ACTIVITY NO.	GAEC UNIT NO.	SUB CONTR UNIT NO.
LM		LM-1(31)	

DRAWING CHANGE REQD: REVISE DWG	RECORD EO	DISPOSITION OF PARTS: REWORK	SCRAP
✓		✓ -7-9	

			~~SUPPORT~~ THERMO	RELIAB. GROUP	GROUP LEADER	STRESS GROUP	LIAISON ENGRG	PROJ ENGRG	GOVT
APPROVED BY					JHS	WJH			AC
DATE	5/2/67	5/2/67			5/2/67	5/2/67		5/2/67	5-2-67
	5	VDI							

PRIORITY: C

DRAWING TITLE: STANDOFF INSTL DESCENT STAGE - L.H. THERMAL

DRAWING NO.: LDW280-51657

EO NO.: B3

ISSUED BY STEA / STRAKOSCH X1156 SECTION VDI GROUP NO. 335 PL 25

C **FITH**

ENG 32.1 REV 3-65

GRUMMAN AIRCRAFT ENGINEERING CORP.
CODE IDENT NO. 26512
ENGINEERING ORDER *

DWG. NO. LDW280-51657		EO NO. B4
CONTROL INFO NO. LDW280A7355		

IN M/B: DESCRIPTION OF EO (CONTINUED)

FOR -27 ADDED N/A LDW280-51509 EFF. LM-1(31) (1 REQD)
FOR -27 ADDED N/A LDW280-52509 EFF LM-2(32) (1 REQD)

FOR -29 ADDED N/A LDW280-52553 EFF LM-2(32) (1 REQD/MOD)

FOR - -9 REMOVED N/A LDW280-52553 EFF LM-2(32)
FOR -27 REMOVED N/A LDW280-51553 EFF LM-1(31)
FOR -7 REMOVED N/A LDW280-52509 EFF LM-2(32)
REMOVED N/A LDW280-51509 EFF LM-1(31)

THIS IS A REVISION OF E.O. B3

DETAIL SPEC REQ	☐	CL II ENGRG CHG	☐	CL I ENGRG CHG	☑	LCD-1244 5

REASON FOR EO: TO PROVIDE FOR FITH SHIELD

DESCRIPTION OF EO: REF E.O. B3 (NOTED ABOVE)

GAEC EO RELEASE: VK 6/16/7 ℮

MODEL	EFFECTIVITY		
	PROCURING ACTIVITY NO.	GAEC UNIT NO.	SUB CONTR UNIT NO.
LM		LM-1(31)	
LM		LM-2(32)	

DRAWING CHANGE REQD		DISPOSITION OF PARTS		APPROVED BY	JeP			JAS	W/			
✓			✓	DATE	6/12/67			6/12/67	6/13/67		6/15/67	6/16/67
REVISE DWG	RECORD EO	REWORK	SCRAP	5	VDI	SUPPORT	RELIAB. GROUP	GROUP LEADER	STRESS GROUP	LIAISON ENGRG	PROJ ENGRG	~~GOVT~~

PRIORITY	DRAWING TITLE	DRAWING NO.	EO NO.
C	STANDOFF INSTL DESENT STAGE - L.H. THERMAL	LDW280-51657	B4

ISSUED BY STEA/STRAKOSCH SECTION VDI GROUP NO. 335 PL 25

01 NAS 9-1100

01 ✓ NAS 9-1100

ENG 32.2 REV 3-65

FITH Ⓐ

GRUMMAN AIRCRAFT ENGINEERING CORP.
CODE IDENT NO. 26512 *
ENGINEERING ORDER

DWG. NO. LDW280-51657 EO NO. B5
CONTROL INFO NO. LDW280A7869

FOR -19, -21 & -7 ADD SECTION ** & REMOVE PARTS AS NOTED BELOW & REMOVE SHADED PORTION OF BLKT.

ON-23 LDW280P17461-63 REPLACES LDW280P17461-43
ON-25 LDW280P17461-67 REPLACES LDW280P17461-37
REMOVE -9 INSTL FROM F/D, B/M & MOD/BLK
FOR -19 ADD LM-3(33) 1/MOD REQT N/A LDW280-53553
FOR -25 REMOVE LDW280P17461-61

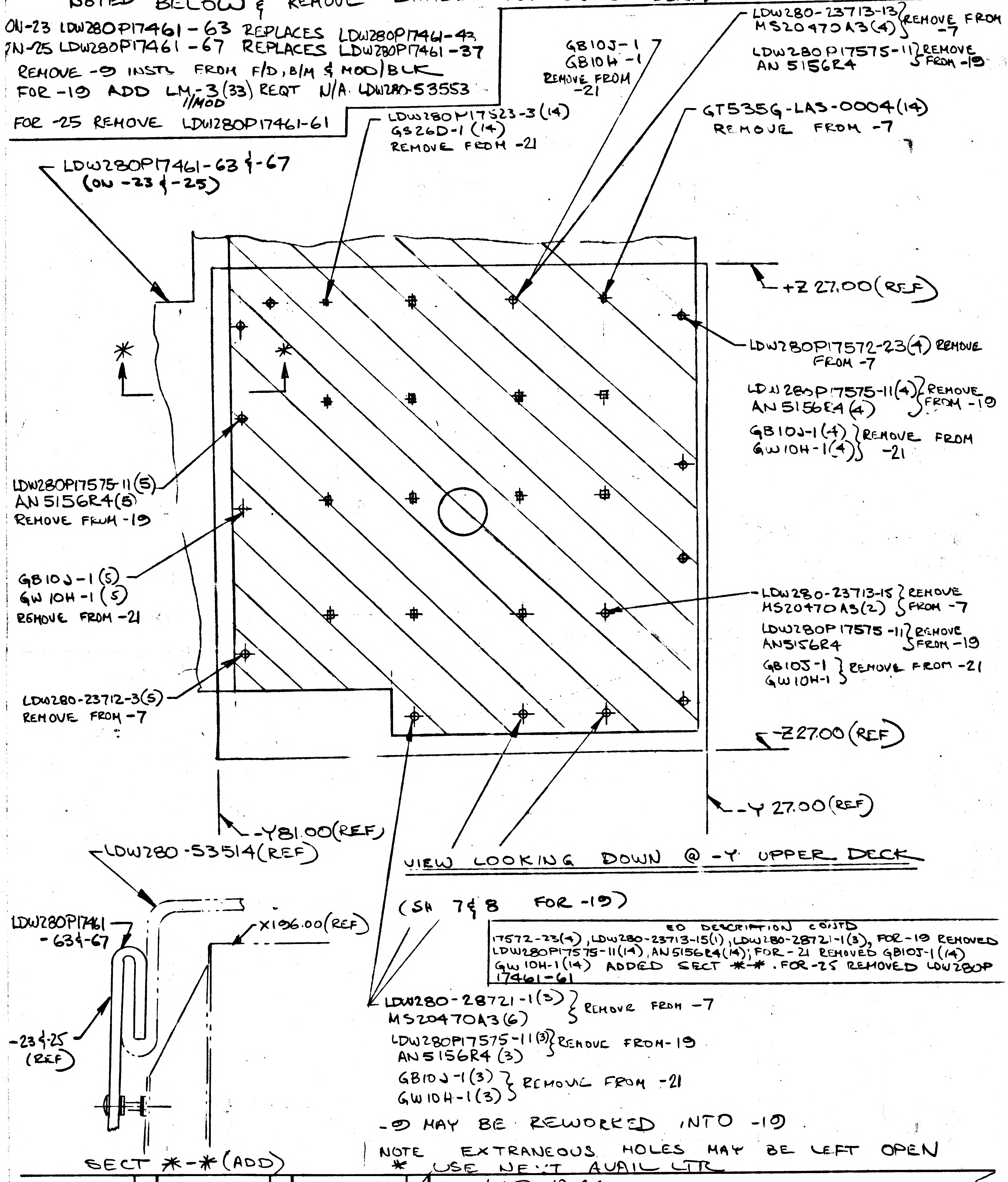
GB10J-1
GB10H-1
REMOVE FROM -21
LDW280-23713-13 / MS20470A3(4) REMOVE FROM -7
LDW280P17575-11 / AN5156R4 REMOVE FROM -19
LDW280P17523-3(14)
GS26D-1(14)
REMOVE FROM -21
GT535G-LAS-0004(14)
REMOVE FROM -7
LDW280P17461-63 & -67
(ON -23 & -25)
+Z 27.00(REF)
LDW280P17572-23(4) REMOVE FROM -7
LDW280P17575-11(4) / AN5156R4(4) REMOVE FROM -19
GB10J-1(4) / GW10H-1(4) REMOVE FROM -21
*
*
LDW280P17575-11(5)
AN5156R4(5)
REMOVE FROM -19
GB10J-1(5)
GW10H-1(5)
REMOVE FROM -21
LDW280-23712-3(5)
REMOVE FROM -7
LDW280-23713-15 / MS20470A3(2) REMOVE FROM -7
LDW280P17575-11 / AN5156R4 REMOVE FROM -19
GB10J-1 / GW10H-1 REMOVE FROM -21
-Z 27.00(REF)
-Y 81.00(REF)
-Y 27.00(REF)
LDW280-53514(REF)
LDW280P17461
-63 & -67
X196.00(REF)
-23 & -25
(REF)
SECT *-* (ADD)

VIEW LOOKING DOWN @ -Y UPPER DECK

(SH 7 & 8 FOR -19)

EO DESCRIPTION CONT'D
17572-23(4), LDW280-23713-15(1), LDW280-28721-1(3), FOR -19 REMOVED LDW280P17575-11(14), AN5156R4(14); FOR -21 REMOVED GB10J-1(14) GW10H-1(14) ADDED SECT *-*. FOR -25 REMOVED LDW280P 17461-61

LDW280-28721-1(3) } REMOVE FROM -7
MS20470A3(6) }
LDW280P17575-11(3) } REMOVE FROM -19
AN5156R4 (3) }
GB10J-1(3) } REMOVE FROM -21
GW10H-1(3) }

-9 MAY BE REWORKED INTO -19.

NOTE EXTRANEOUS HOLES MAY BE LEFT OPEN
* USE NEXT AVAIL LTR

DETAIL SPEC REQ		CL II ENGRG CHG		CL I ENGRG CHG	✓	LCD 1244 5

REASON FOR EO: TO PROVIDE FOR FITH SHIELD

DESCRIPTION OF EO: ON-23 ADDED LDW280P 17461-63 & REMOVED LDW280P17461-43, ON -25 ADDED LDW280P17461-67 & REMOVED LDW280P17461-37. REMOVED -9 FROM F/D, B/M & A/B. ADDED LM-3 EFF TO -19; FOR -7 REMOVED: LDW280 -23712-3(5), -23713-13(1), MS20470A3(12), GT535G-LAS-0004(14), LDW280P

Ⓡ GAEC EO RELEASE: JK 7/31/67 C

MODEL	PROCURING ACTIVITY NO.	GAEC UNIT NO.	SUB CONTR UNIT NO.
LM		LM-3(33) THRU	
		LM-15(45)	

DRAWING CHANGE REQD		DISPOSITION OF PARTS		APPROVED BY							
REVISE DWG	RECORD EO	REWORK	SCRAP	DATE 7/28/67	VDI	SUPPORT	RELIAB. GROUP	GROUP LEADER 7/28/67	STRESS GROUP 7/28/67	LIAISON ENGRG	PROJ ENGRG 7/28/67
✓		✓									7-31-67

PRIORITY	DRAWING TITLE	DRAWING NO.	EO NO.
C	D/S ~ LH STANDOFF INSTL THERMAL	LDW280-51657	B5

ISSUED BY G. BARNES / J. STRAKOSCH X1153 7/28 SECTION VDI GROUP NO. 335 PL 25

ENG 32.1 REV 3-65 L M

GRUMMAN AIRCRAFT ENGINEERING CORP.
CODE IDENT NO. 26512 *
ENGINEERING ORDER

DWG. NO. LDW280-51657 | EO NO. B6
CONTROL INFO NO. LDW280A 8142

FOR -29 BLANKET INSTL ADD LDW 280P18339-5 BLANKET ASSY & LDW 280P18339-23 TAPE ASSY

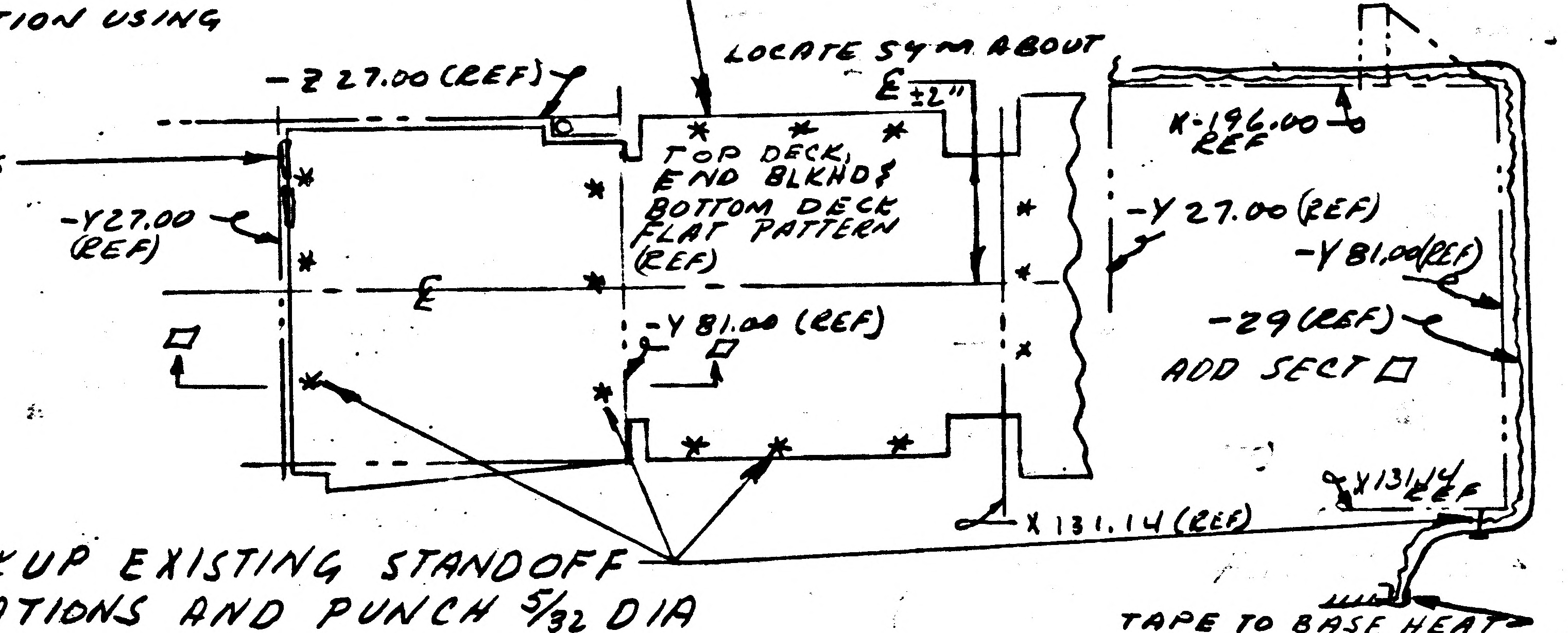
- Z 27.00 (REF)
LOCATE SYM ABOUT ℄ ±2"
TOP DECK, END BLKHD & BOTTOM DECK FLAT PATTERN (REF)
-Y27.00 (REF)
℄
☐
-Y 81.00 (REF)
☐
X-196.00 REF
-Y 27.00 (REF)
-Y 81.00 (REF)
-29 (REF)
ADD SECT ☐
Y131.14 REF
X 131.14 (REF)

LDW280P18339-5 TRIM ON INSTL TO MATCH SHAPE OF PLUME IMPINGEMENT SHIELD; BUTT FIT TO 2" MAX CLEARANCE. TRIM AS REQD TO CLEAR PENETRATIONS BY 2" MAX

TAPE EDGES OF LDW280P18339-5 TO EXISTING INSULATION USING LDW280P18339-23 4" TO 6" STRIPS 1" MIN SPACE BETWEEN STRIPS

PICKUP EXISTING STANDOFF LOCATIONS AND PUNCH 5/32 DIA HOLE IN LDW280P18339-5 INSTALL WITH EXISTING HDW

TAPE TO BASE HEAT SHIELD (LDW280P18339-23)

☐ = NEXT AVAILIBLE SECT LETTER

DETAIL SPEC REQ		CL II ENGRG CHG		CL I ENGRG CHG	✓	LCD-1847	S

REASON FOR EO	DESCRIPTION OF EO	GAEC EO RELEASE
ADDITIONAL THERMAL PROTECTION	FOR -29 ADDED LDW280P18339-5 & -23 ADDED SECT ☐	Ⓡ C JK 8/1/7

MODEL	EFFECTIVITY ~~PROCURING ACTIVITY~~ NO. EI	GAEC UNIT NO.	SUB CONTR UNIT NO.
LM	LFM-26	LM-1 (31)	
		LM-2 (32)	

DRAWING CHANGE REQD		DISPOSITION OF PARTS		APPROVED BY / DATE								
✓		-29		7/31/67		7/31/67 CHECKED	7/31/67	7/31/67		7/31	8-1-67
REVISE DWG	RECORD EO	REWORK	SCRAP	VDI	SUPPORT	~~RELIAB~~ GROUP	GROUP LEADER	STRESS GROUP	LIAISON ENGRG	PROJ ENGRG	~~GOVT~~

PRIORITY	DRAWING TITLE	DRAWING NO.	EO NO.
C	STANDOFF INSTL- D.S. - L.H. THERMAL	LDW280-51657	B6

ISSUED BY H. PALLMEYER / J. STRAKOSCH SECTION VEH DES INT GROUP NO. 335 PL 25

01

NAS 9-1100

B

ENG 32.1 REV 3-65

GRUMMAN AIRCRAFT ENGINEERING CORP.
CODE IDENT NO. 26512
ENGINEERING ORDER

DWG. NO. LDW280-51657
EO NO. B7
CONTROL INFO NO. LM5-16018

THIS IS A REV OF EO B5

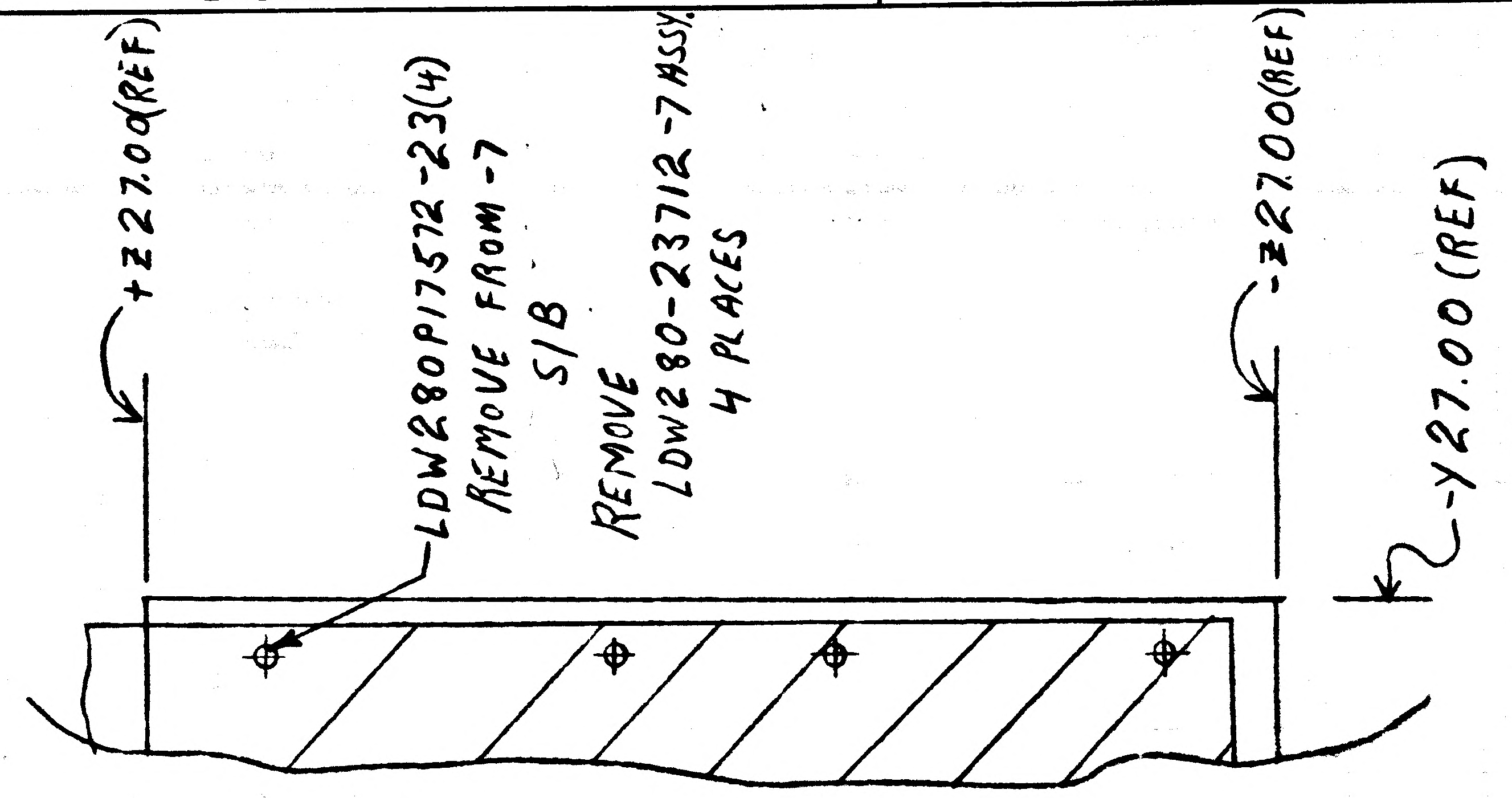

RELEASED BY LIAISON

DETAIL SPEC REQ		CL II ENGRG CHG		CL I ENGRG CHG	✓	LCD 1244

5

REASON FOR EO
TO PROVIDE FOR FITH SHIELD
RJE.05131-289

REF EO: B5
DESCRIPTION OF EO: IN FLO & B/M ON -7
REMOVE LDW280-23712-7 ASSY 4 PLACES
WAS
"LDW280P11752-23(4) REMOVE FROM -7"

GAEC EO RELEASE: C
JK

MODEL	PROCURING ACTIVITY NO.	GAEC UNIT NO.	SUB CONTR UNIT NO.
	EFFECTIVITY		
LM		LM-3(33)	
		THRU	
		LM-15(45)	

DRAWING CHANGE REQD		DISPOSITION OF PARTS		APPROVED BY								
				DATE	8/24/67			—	8/22/67	8/21/67	8/24/67	8/23/67
REVISE DWG ✓	RECORD EO	REWORK ✓	SCRAP	8/16/67	VDI	SUPPORT	RELIAB. GROUP	GROUP LEADER	STRESS GROUP	LIAISON ENGRG CH	PROJ ENGRG	~~GOFT~~

PRIORITY: C
DRAWING TITLE: STANDOFF INSTALLATION D/S ~ LH THERMAL
DRAWING NO.: LDW280-51657
EO NO.: B7

ISSUED BY LIAISON J.JARVIS/S.G. X86757 SECTION VDI GROUP NO. 335 PL 25

01

NAS 9-1100

ENG 32.1 REV 3-65

GRUMMAN AIRCRAFT ENGINEERING CORP.
CODE IDENT NO. 26512
ENGINEERING ORDER

DWG. NO. LEO 280
EO NO. 817
CONTROL INFO NO. LDW280 80644

FOR ALL DASH NUMBERS & NEXT ASSYS. IN M/B OF THE FOLLOWING DWGS. REMOVE LM 3 (33) THRU LM 15 (45) REQUIREMENTS

ITEM	DWG. NO.	NEXT ASSY*	TITLE	CHANGE NO
✓ 1	LDW280P17460	LDW280-52656	SEE DWG.	C2
✓ 2	P17461	-51657		B7
✓ 3	P17462	-52658		B8
4	P17463	-52659		B8
✓ 5	-52656	-53553		C4
✓ 6	-52656	-54553		
✓ 7	-51657	-53553		B8
8	-51657	-54553		
9	-52658	-53553		B8
10	-52658	-54553		
11	-52659	-53553		B1
12	-52659	-54553	SEE DWG.	

DETAIL SPEC REQ ☐ CL II ENGRG CHG ☐ CL I ENGRG CHG ✓ LCD 2360 (5)

REASON FOR EO: REDESIGNED END BULKHDS

DESCRIPTION OF EO: REMOVED EFF LM-3 (33) THRU LM-15 (45) FROM N/A*

GAEC EO RELEASE: C

MODEL	PROCURING ACTIVITY NO.	GAEC UNIT NO.	SUB CONTR UNIT NO.
LM		LM 3 (33) THRU	LM 45 (15)

DRAWING CHANGE REQD: REVISE DWG ✓ RECORD EO ☐
DISPOSITION OF PARTS: REWORK ☐ SCRAP ✓

APPROVED BY								
DATE	12/8/67			12-8-67			12/8/67	12-16-67
P	VDI	SUPPORT	RELIAB. GROUP	GROUP LEADER	STRESS GROUP	LIAISON ENGRG	PROJ ENGRG	~~GOVT~~

PRIORITY: C
DRAWING TITLE: NOTED
DRAWING NO.: LEO280
EO NO.: 817

21 DEC 67
ISSUED BY E.V.R. CASE / P. THORJUSEN SECTION VDI GROUP NO. 335 PL 25

01

NAS 9-1100

ENG 32.1 REV 3-65

GRUMMAN AIRCRAFT ENGINEERING CORP.
CODE IDENT NO. 26512
ENGINEERING ORDER

DWG. NO. LEO280
EO NO. 822
CONTROL INFO NO. LDW280B0818

FOR ALL DASH NUMBERS & NEXT ASSYS. IN M/B OF THE FOLLOWING DWGS. REMOVE LM-3 (33) THRU LM-15(45) REQUIREMENTS

ITEM	DWG NO.	NEXT ASSY.	TITLE	CHANGE NO.
✓ 1.	LDW280-52656	LDW280-53509 -54509	SEE DWG.	C6
✓ 2.	-51657	-53509 -54509		B9
3.	-52658	-53509 -54509		B9
4.	LDW280-52659	-53509 LDW280-54509	SEE DWG.	B2

DETAIL SPEC REQ ☐ CL II ENGRG CHG ☐ CL I ENGRG CHG ✓ LCD 2360

REASON FOR EO: REDESIGNED END BULKHDS

DESCRIPTION OF EO: REMOVED EFF. LM-3(33) THRU LM-15(45) FOR ALL DASH NO'S

GAEC EO RELEASE: (5) JK 12-26-67

MODEL	PROCURING ACTIVITY NO.	GAEC UNIT NO.	SUB CONTR UNIT NO.
LM		LM-3 (33) THRU LM-15 (45)	

DRAWING CHANGE REQD: REVISE DWG	RECORD EO	DISPOSITION OF PARTS: REWORK	SCRAP
✓			✓

APPROVED BY	JAS			P. THORBUSEN					
DATE	12/18/67			12-18-67	12/20/67		12/18/67	12-26-67	
P	V.D.I.	SUPPORT	RELIAB. GROUP	GROUP LEADER	STRESS GROUP	LIAISON ENGRG	PROJ ENGRG	GOVT	

PRIORITY: C
DRAWING TITLE: NOTED
DRAWING NO.: LEO280
EO NO.: 822

21 DEC 67
ISSUED BY E.V.R.CASE/H. PALUMEYER/P. THORBUSEN x1153 SECTION V.D.I. GROUP NO. 335 PL 35

01 NAS 9-1100

LDW280-51658 A

MODEL OR END ITEM	NEXT ASSY	MODULE OR SER NO.	REQD PER MODULE OR END ITEM
LM	LDW280-51553	LM-1(31)	1
PART NO. LDW280-51658-9		GAEC SCH NO. 52 -	

MODEL OR END ITEM	NEXT ASSY	MODULE OR SER NO.	REQD PER MODULE OR END ITEM
LM	LDW280-51509	LM-1(31)	1
PART NO. LDW280-51658-7 -		GAEC SCH NO. 50 -	

MODEL OR END ITEM	NEXT ASSY	MODULE OR SER NO.	REQD PER MODULE OR END ITEM
PART NO.		GAEC SCH NO.	

WORK PACKAGE FUNCTION NO. 110 5

SH REV STATUS: FOR DESCRIPTION OF REV SEE SUBQ SH

SHEET	1.00	1.10	2.00	2.01	3.00	4.00	5.00	6.00	
REV	A	A	A	A	A	A	A	A	
SHEET									
REV									
SHEET									
REV									

LAST SECT LTR USED: V

LAST DASH NO. USED: -17

GRUMMAN REL INFO A		
PRIM NO.	JS(001)	
207	MP14	A 3-29-7

UNLESS OTHERWISE SPECIFIED DIMENSIONS ARE IN INCHES.
TOLERANCE UNLESS SPECIFIED FRACTIONS - DECIMALS - ANGLES
± 1/32 ±.010 ± 1/2°

ORIG DWG AUTH
DETAIL SPEC REQUIREMENT
CLASS II ENGRG CHANGE
CLASS I ENGRG CHANGE

CONTRACT NO. NAS9-1100
LINE ITEM 1
DOCUMENTATION TYPE II

DRAWN BY	G. KORDES 1/5/67	RELIABILITY	
LAYOUT BY	H. PALLMEYER	THERMO	AB 3/24/67
CHECKED BY	H. RODALEWICZ		
GR LDR			
VEH. DESIGN	[illegible] 3/1/67		
STRUCTURES		PROJ ENGR	D.A. McClaughan 3/23/67
STRUCTURES		REL GROUP	
WEIGHTS			

GRUMMAN AIRCRAFT ENGRG CORP
BETHPAGE, L. I., NEW YORK

BLANKET INSTL
DESCENT STAGE - AFT - THERMAL

SIZE	CODE IDENT NO.		
B	26512	LDW280-51658	A
SCALE	NONE	SHEET 1.00 OF 8	

ENG 77.1 12-65

01 NAS 9-1100

REVISIONS

FOR CONTINUATION OF REVISIONS SEE SHEET ______

CHANGE LTR	ITEM NO.	SHEET NO.	ZONE	GRUMMAN INFO ONLY	DET SPEC	CLASS I	CLASS II	ENGRG ORDER	DESCRIPTION	EFFECTIVITY	DISPOSITION OF EXISTING PARTS		CHANGED BY AND DATE	ENGRG APPD	APPD
											REWORK	SCRAP			
A	1	1,1.10,2,2.01,3,4,5,6						EO A1	EOA1 INITIAL DWG RELEASE PARTS MADE FROM EO	LM-1 THRU LM-6	✓		G. KORDES 1-5-66	3/25/67	3/28/67
	2	1,1.10,3,5						EO A2	RELOCATED STANDOFFS & ADDED INFO TO NOTE 1, REMOVED EFF REQUIREMENTS OF LM 2,3,4,5 & 6.	LM-1	✓				
	3	1,1.10,2,2.01,3,4,5,6					✓	EO A3	REMOVED -1,-3, & -5, ADDED -7,-9,-11,-13,-15, & -17, REMOVED DETAIL "F", SECTION H-H, D-D, & M-M ADDED SECT S-S, T-T, U-U, & DETAIL "V", REMOVED NOTE 4 & ADDED NOTES 7, 8, & 9, REVISED NOTES 2 & 3, IN NOTE 2 REPLACED, BOND WITH FASTEN, LDW280P17700-7 WITH -17, & (AS SHOWN WITH EPON 934 PER LSP-14-22500) WITH (PER LSP280-14), IN NOTE 3 REMOVED LDW280P17936-43 & -51, REPLACED LDW280P17462 WITH -11 & LDW280P17936-29 WITH GT535L-HA-0250.	LM-1	-1 & -3	-5			
	4	1.10,3					✓	LE0280-374	ON DWG. NO. LDW280-51658, ADDED GENERAL NOTE #10	LM-1	✓				
	5	1.10,3						EOA5	ON-11 REMOVED LDW280P17524-1; 6 PLCS. HR	LM-1	NOT	REQD			
	6	2.01,3,5							IN F/D & BM ADDED GS26D-1 & REMOVED LDW280P17700-17. IN F/D ADDED NOTE #11 & #12. REVISED NOTE #2 GS26D-1 WAS LDW280P1770-17, #3 USING ASTROQUARTZ TREAD.	LM-1	NOT	REQD	NARONIS 2-24-67		
	7	1.10,3,4,5 & 6						②	IN F/D ADDED VENT LOCATIONS PER LPC280-2 (17 PLACES)	LM-1	✓		NARONIS 3/13/67		

CHG APPROVED

LTR	~~GROUP LDR~~	VEH. DES INT.	STRUCTURES	STRUCTURES	WEIGHT	RELIABILITY	THERMO
A		3/18/67	3/24/67				AB 3/24/67

GRUMMAN AIRCRAFT ENGRG CORP., BETHPAGE, L. I., NEW YORK

SIZE	CODE IDENT NO.		
B	26512	LDW280-51658	A

SCALE NONE

SHEET 1.10

ENG 77.16 3-66

01

NAS 9-1100

			1				LDW360-51297-13	E	THERMOCOUPLE	SEE DWG						9B
								↑		↑						
					4		LDW280-28721-1		STANDOFF ASSY							6F
					1		LDW280-23713-15		STANDOFF ASSY							4E
					12		LDW280-23712-3		STANDOFF ASSY	↓						8E
					7		LDW280-23712-1		STANDOFF ASSY	SEE DWG						18A
																4B 21B
			AR				LDW280P17590-11		TAPE	SEE DWG						11A
				26			LDW280P17575-11		RETAINER	↑						3A
					4		LDW280P17572-23		STANDOFF							3A
			39				LDW280P17523-3		CAP							4B
1							LDW280P17462-43		SKIN							4B
	1						LDW280P17462-37		BLANKET ASSY	↓						25A
		1					LDW280P17462-29		BLANKET ASSY	SEE DWG						4B
			1				LDW280-51658-17		BLANKET ASSY					NONE	NONE	4A
			1				↑ -15		↑					↑	↑	4A
			1				-13		↓							4A
				1			-11		BLANKET ASSY							4A
							↓ -9	↓	BLANKET INSTL					↓	↓	4A
							LDW280-51658-7	E	BLANKET INSTL					NONE	NONE	4A
-17	-15	-13	-11	-9	-7	CODE IDENT	PART NO.	I&T	NOMENCLATURE OR DESCRIPTION	MATERIAL	GOVT SPEC	COML SPEC	STOCK SIZE	PROCESS SYM	FINISH NO.	ZONE
QTY PER ASSEMBLY																

SYM OR NO.	PROCESS OR FINISH	GRUMMAN SPEC OR MILITARY SPEC	SYM OR NO.	PROCESS OR FINISH	GRUMMAN SPEC OR MILITARY SPEC	SYM OR NO.	PROCESS OR FINISH	GRUMMAN SPEC OR MILITARY SPEC

I & T: IDENTIFICATION AND TRACEABILITY IN ACCORDANCE WITH :
NONE

GRUMMAN AIRCRAFT ENGRG CORP, BETHPAGE, L. I., NEW YORK

SIZE B
CODE IDENT NO. 26512
LDW280-51658
A

SCALE NONE
SHEET 2.00

ENG 77.2 7-65

01

NAS 9-1100

-17	-15	-13	-11	-9	-7	CODE IDENT	PART NO.	I&T	NOMENCLATURE OR DESCRIPTION	MATERIAL	GOVT SPEC	COML SPEC	STOCK SIZE	PROCESS SYM	FINISH NO.	ZONE
			AR				RQ754-12	E	SEE NOTE #11							
			AR				GT535B-2-100	E	TAPE	GRUMMAN STD						
			AR				GT835M-8	↑	TAPE	↑						
			AR				GT835P-8		TAPE							
			AR				GS577A-1		STAPLE							
			39				GS26D-1		STANDOFF ASSY							
			31				GW10H-1		WASHER							
			31				GB10J-1		BUSHING							
			2				GT535L-HA-0250		TAPE, FASTENER	↓						
					39		GT535G-LAS-0004		TAPE, FASTENER	GRUMMAN STD						
					AR		MS20470A3		RIVET	STD PART						
								↓								
				31			AN515-6R4	E	SCREW	STD PART						

QTY PER ASSEMBLY

SYM OR NO.	PROCESS OR FINISH	GRUMMAN SPEC OR MILITARY SPEC	SYM OR NO.	PROCESS OR FINISH	GRUMMAN SPEC OR MILITARY SPEC	SYM OR NO.	PROCESS OR FINISH	GRUMMAN SPEC OR MILITARY SPEC

I & T: IDENTIFICATION AND TRACEABILITY IN ACCORDANCE WITH :
NONE

GRUMMAN AIRCRAFT ENGRG CORP, BETHPAGE, L. I., NEW YORK

SIZE	CODE IDENT NO.		
B	26512	LDW280-51658	A

SCALE NONE SHEET 2.01

ENG 77.2 7-65

01 NAS 9-1100

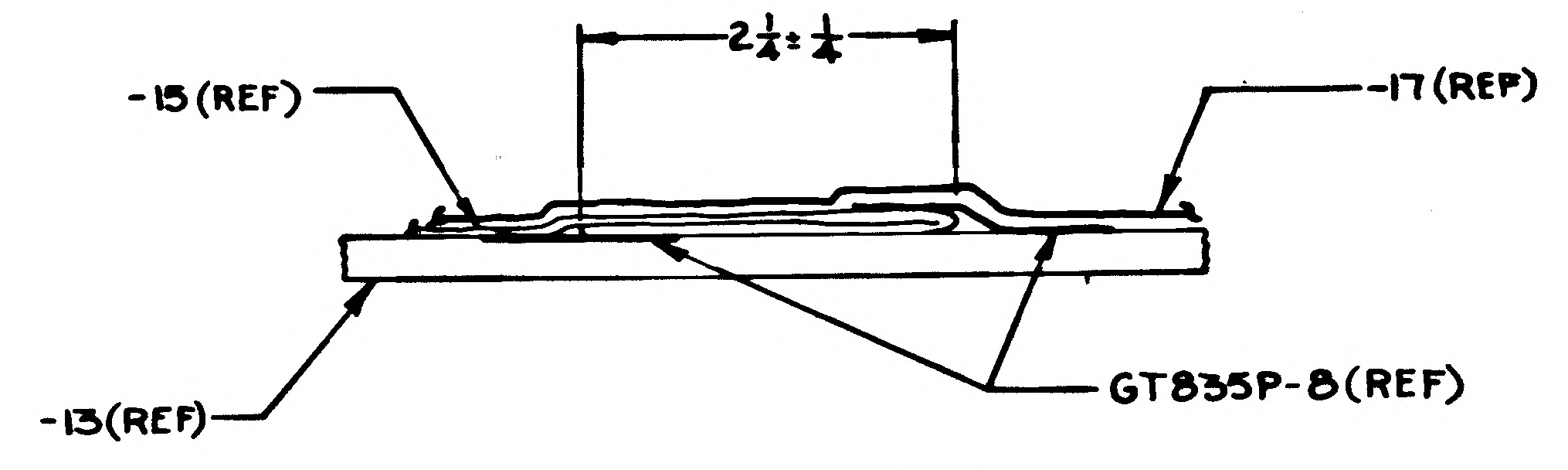

2¼ ± ¼
-15 (REF)
-17 (REF)
-13 (REF)
GT835P-8 (REF)

SECTION U-U (SH. 6 ZONE 23B)
NO SCALE

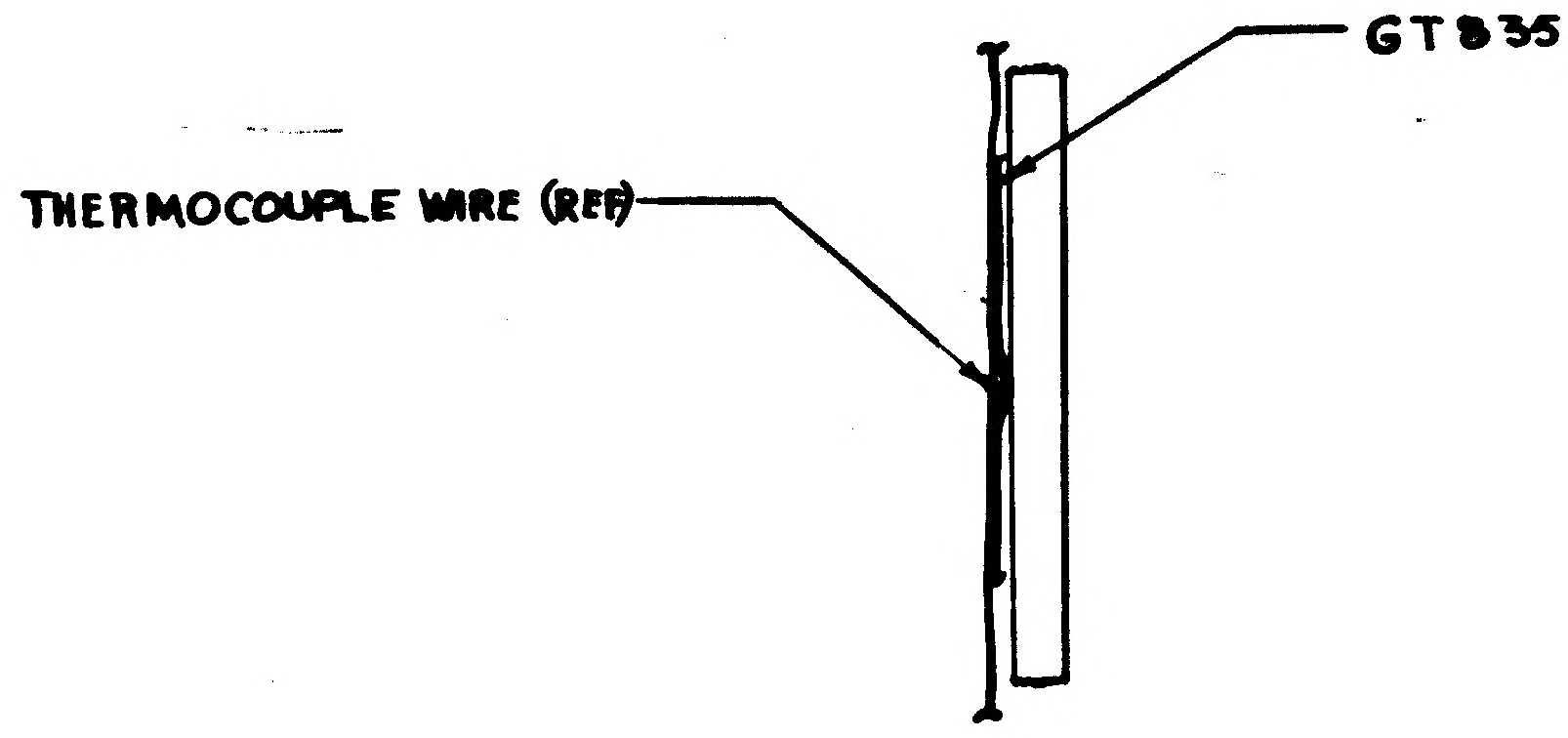

GT835P-8 (REF)
THERMOCOUPLE WIRE (REF)

SECTION T-T (ZONE 9B)
NO SCALE

Ⓐ₃

Ⓐ₃

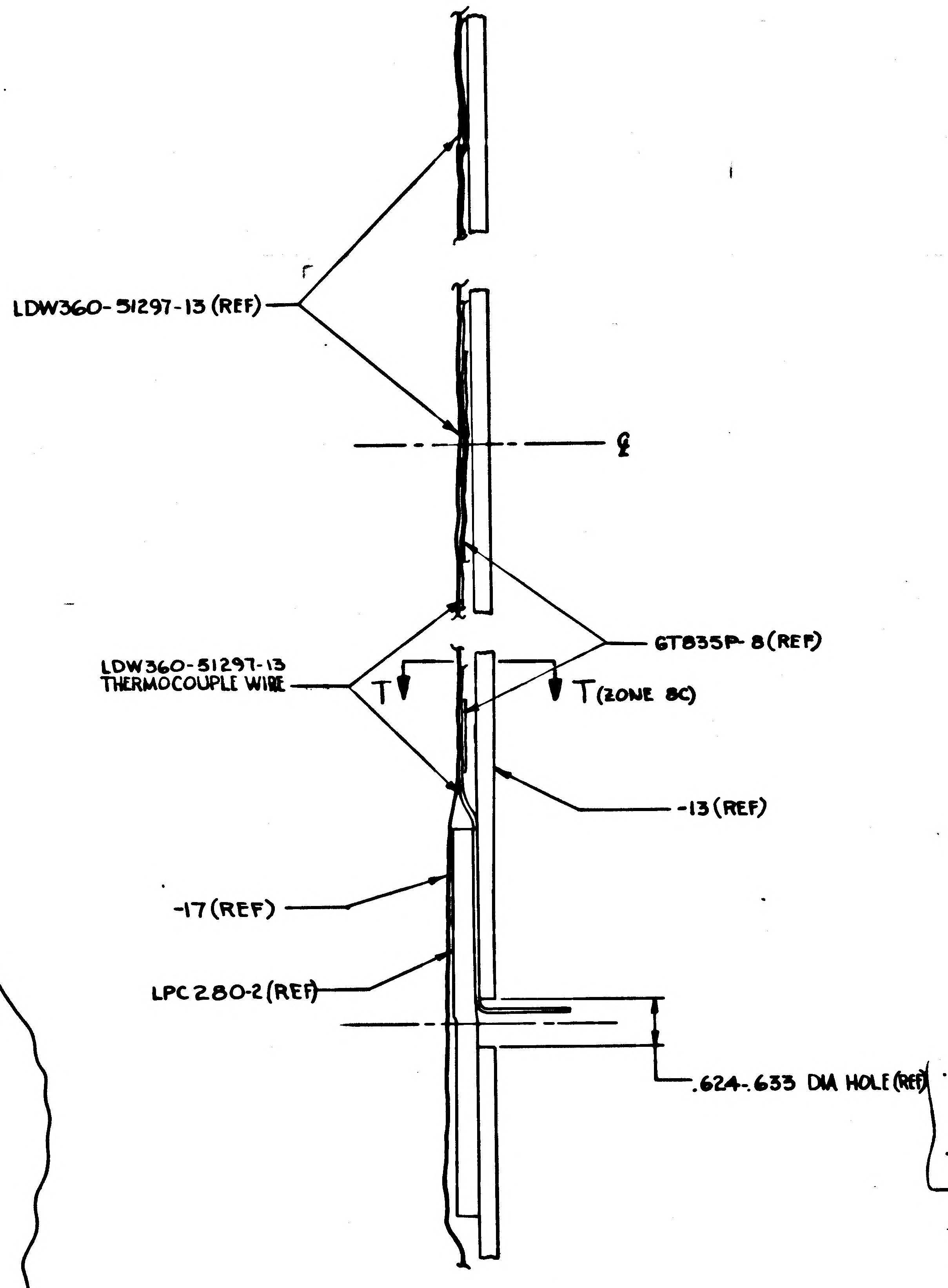

LDW360-51297-13 (REF)
℄
GT835P-8 (REF)
LDW360-51297-13
THERMOCOUPLE WIRE
T
T (ZONE 8C)
-13 (REF)
-17 (REF)
LPC280-2 (REF)
.624-.633 DIA HOLE (REF)

SECTION S-S (SH.5 ZONE 20B)
NO SCALE

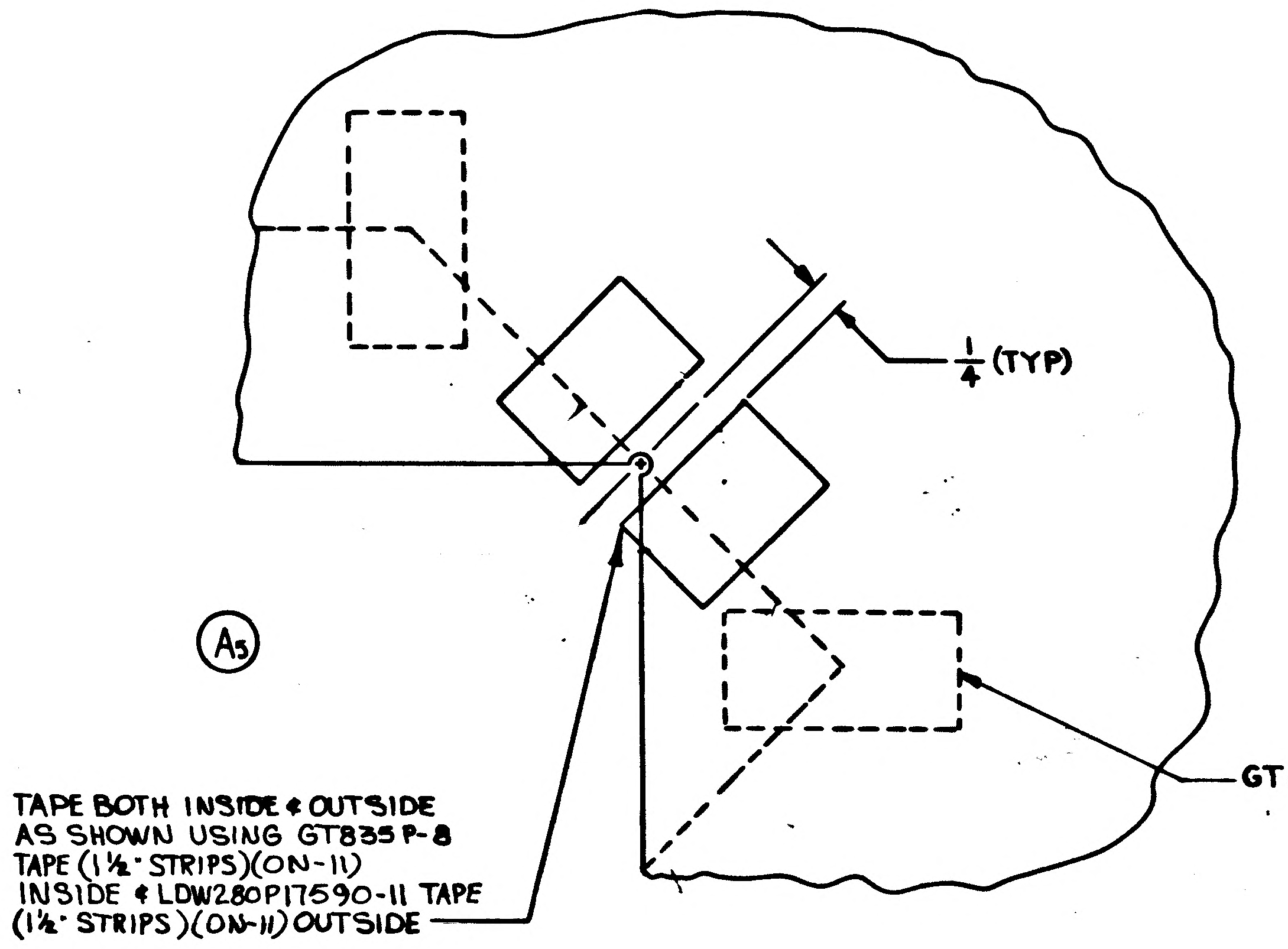

¼ (TYP)
Ⓐ₅
GT835 (REF)

TAPE BOTH INSIDE & OUTSIDE
AS SHOWN USING GT835P-8
TAPE (1½" STRIPS)(ON-11)
INSIDE & LDW280P17590-11 TAPE
(1½" STRIPS)(ON-11) OUTSIDE

DETAIL "V" (ZONE 21A SH.5)
(ZONE 26A SH.6)

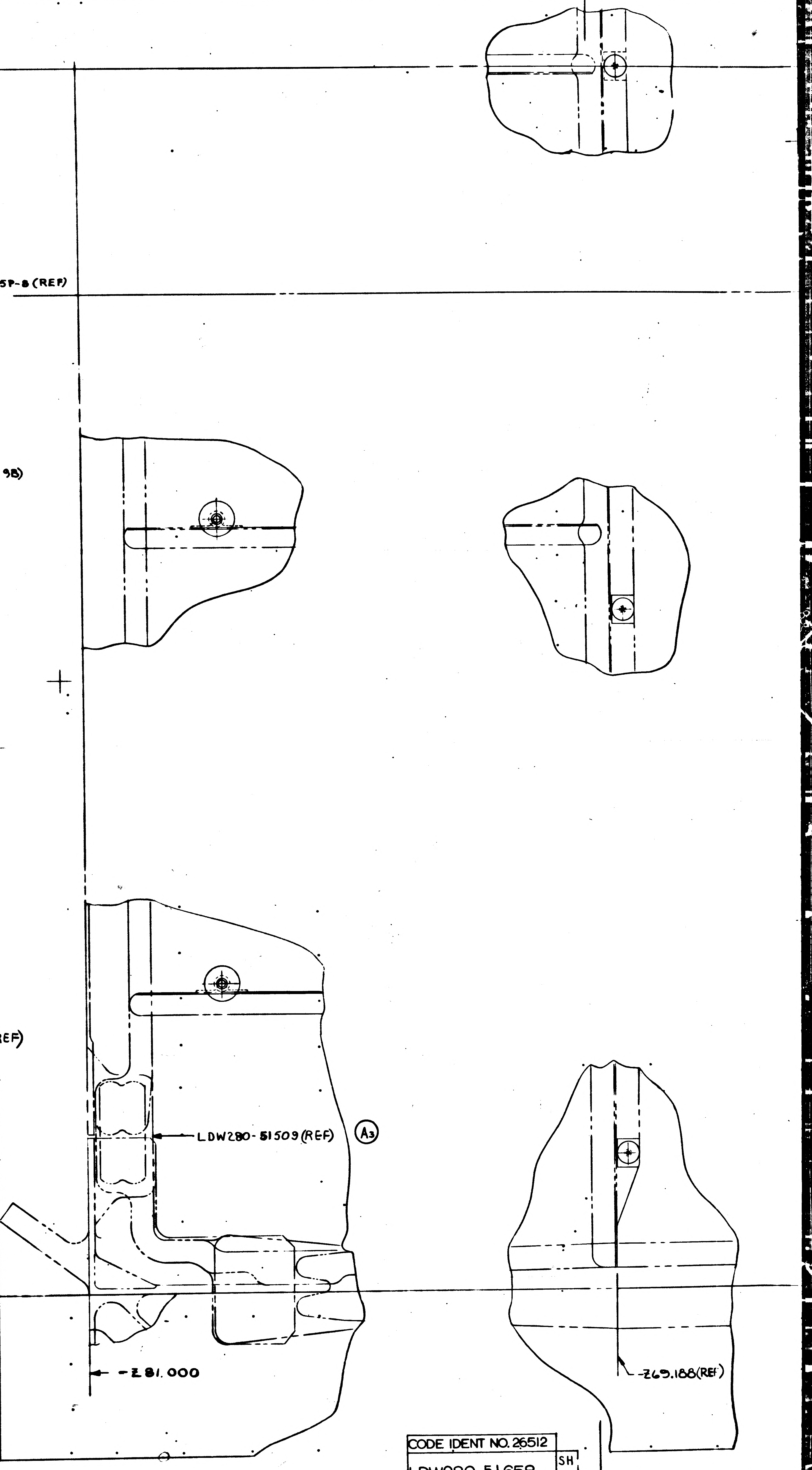

LDW280 P17462-29 (REF)
(SEE NOTE 6)
LDW280-51509 (REF)
Ⓐ₃
+Y 27.000
-Z 81.000
-Z 65.188 (REF)

01/03 NAS 9-1100

CODE IDENT NO. 26512
LDW280-51658
SH 3

02703 NAS 9-1100

7
6
5
4
3
REG
TEMPLATE BUTT
10.TO PHOTO
LINE ON S
5
PHOTO BUTT
LDW280-51509 (REF)
+Y5.238(REF)
VENT PER LPC280-2 (A7)
VENT PER LPC280-2 (A7)
LDW280-51509(REF)
(A3)
(ZONE 2B)
L
L
GT535G-LAS-0004(ON-7)(15 PLACES). (SEE NOTE # 1)
GS26D-1 (ON-11)(15 PLACES)(SEE NOTE # 9)
(A6)
LDW280P17523-3 (ON-11) (15 PLACES) (SEE NOTE # 2)
5/32 DIA (15 HOLES)(ON-13 & -17) (SEE NOTE # 8)
55
SEE NOTE # 10
-17 (REF)
GS26D-1(REF)
SECTION
(NO
LDW280P17462-43
LDW280P17462-29
VENT PER LPC280-2 (A7)
VENT PER LPC280-2 (A7)
(A3)
LDW280P17572-23 (4) (ON-7)
LDW280P17575-11 (4) (ON-9)
AN515-6R4 (4) (ON-9)
3/8 DIA 4 HOLES (ON-13 & -17)
(SEE NOTE # 8)
GB10J-1 (4) (ON-11)
GW10H-1 (4) (ON-11)
LDW280-51509(REF)
K
(ZONE A2)
K
+Y21.337(REF)
LDW280
AN515-6R4(REF)
LDW280P17462-29(REF)
SECTIO
-Z69.188(REF)
-Z59.371 (REF)
-Z48.629 (REF)
Z 27.000
VIEW LOOKING DOWN
LDW280-51658 — 7 INSTL
-9 INSTL
-11 ASSY
-13 ASSY
-15 ASSY
-17 ASSY
(A3)
7
6
5
4
3

CODE IDENT NO. 26512
LDW280-51658 SH 3

CODE IDENT NO 26512
LDW280-51658 SH 3

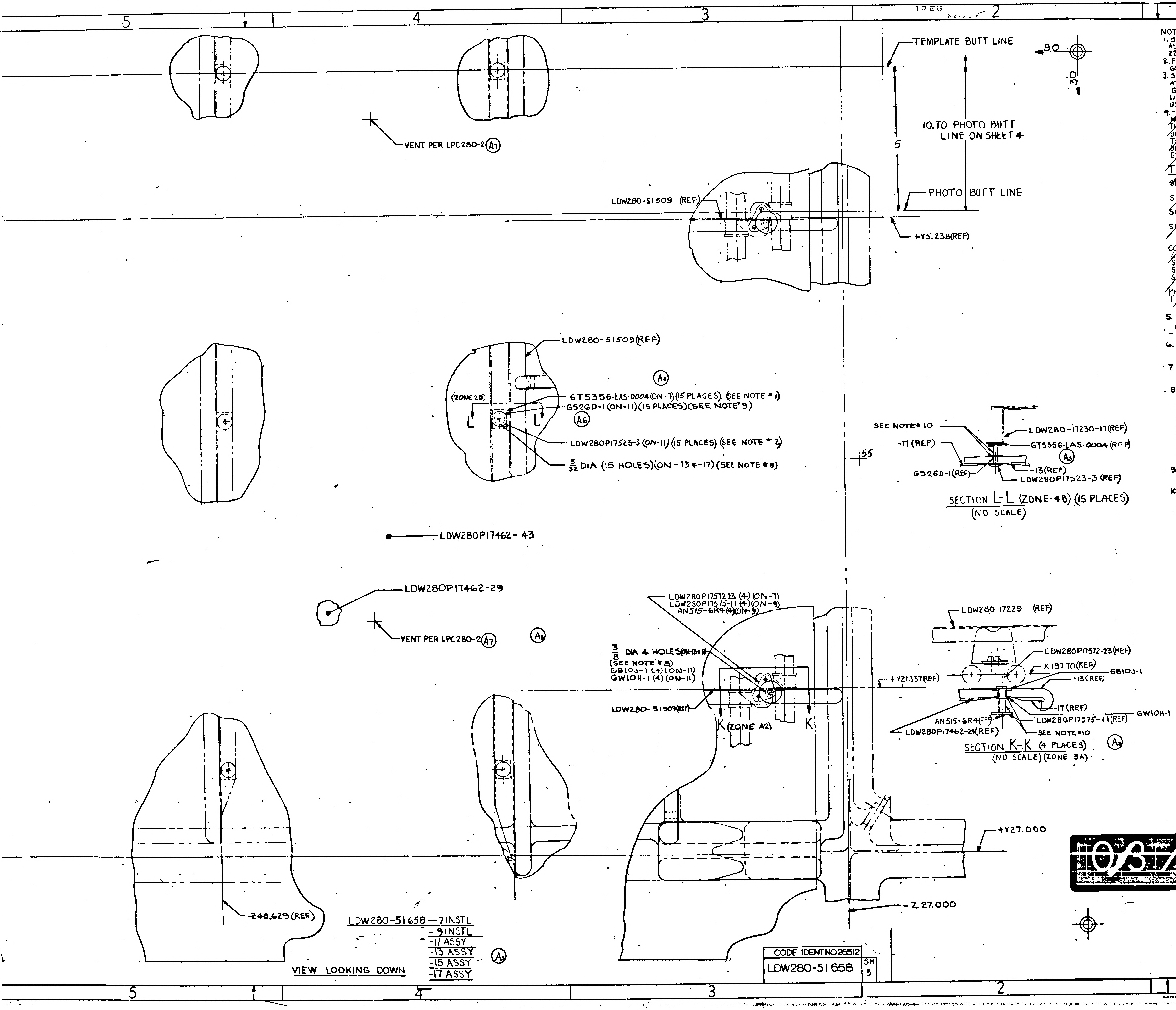
5
4
3
2
1
TREG
TEMPLATE BUTT LINE
90
30
10. TO PHOTO BUTT LINE ON SHEET 4
5
PHOTO BUTT LINE
+Y5.238(REF)
VENT PER LPC280-2 (A7)
LDW280-51509 (REF)
LDW280-51509(REF)
(A3)
(ZONE 2B)
L
L
GT5356-LAS-0004(ON-7)(15 PLACES). (SEE NOTE #1)
GS26D-1(ON-11)(15 PLACES)(SEE NOTE #9)
(A6)
LDW280P17523-3 (ON-11) (15 PLACES) (SEE NOTE #2)
5/32 DIA (15 HOLES)(ON-13 & -17)(SEE NOTE #8)
55
SEE NOTE #10
-17 (REF)
LDW280-17230-17(REF)
GT5356-LAS-0004(REF)
(A3)
-13(REF)
LDW280P17523-3 (REF)
GS26D-1(REF)
SECTION L-L (ZONE-4B) (15 PLACES)
(NO SCALE)
LDW280P17462-43
LDW280P17462-29
VENT PER LPC280-2 (A7)
(A3)
LDW280P17572-23 (4) (ON-7)
LDW280P17575-11 (4) (ON-9)
AN515-6R4 (4) (ON-9)
3/8 DIA 4 HOLES (ON-13 & -17)
(SEE NOTE #8)
GB10J-1 (4) (ON-11)
GW10H-1 (4) (ON-11)
+Y21.337(REF)
LDW280-51509(REF)
K (ZONE A2)
K
LDW280-17229 (REF)
LDW280P17572-23(REF)
X 197.70(REF)
GB10J-1
-13(REF)
-17(REF)
GW10H-1
AN515-6R4(REF)
LDW280P17575-11(REF)
LDW280P17462-29(REF)
SEE NOTE #10
SECTION K-K (4 PLACES)
(NO SCALE) (ZONE 3A)
(A3)
+Y27.000
-Z 27.000
-248.629(REF)
LDW280-51658 -7 INSTL
-9 INSTL
-11 ASSY
-13 ASSY
-15 ASSY
-17 ASSY
(A3)
VIEW LOOKING DOWN

NOTES:

1. BOND LDW280P17936-13 TO STRUCTURE AS SHOWN WITH EPON 934 PER LSP-14-22500. CURE RANGE 1 OR ROOM TEMP CURE 7 DAYS
2. FASTEN LDW280P17523-3 TO GS26D-1 PER LPC280-14.
3. SEW GT535-HA-0250 TO -11 AT 3/16 ± 1/16 FROM EDGES OF GT535L-HA-0250 IN ACCORDANCE WITH FED STD #751a & STITCH TYPE 301 USING ASTROQUARTZ THREAD.
4. ~~-5 ASSY SHOWN ON THIS DRAWING HAS BEEN DRAWN TO PROJECTED DIMS. THIS ASSY SHALL BE MADE TO EXPANDED DIMENSIONS BY MAKING A PHOTO LOFT TO THE EXPANDED TRAMMEL POINT DIMENSIONS INDICATED BELOW. THE EXPANSION RATIO .030 IN/IN~~

~~TRAMMEL POINT~~		~~SHOWN~~	~~EXPANDED~~
~~SHEET 3~~	~~LENGTH~~	~~90.0~~	~~92.700~~
~~3~~	~~WIDTH~~	~~30.0~~	~~30.900~~
~~SHEET 4~~	~~LENGTH~~	~~90.0~~	~~92.700~~
~~4~~	~~WIDTH~~	~~30.0~~	~~30.900~~
~~SHEET 5~~	~~LENGTH~~	~~90.0~~	~~92.700~~
~~5~~	~~WIDTH~~	~~30.0~~	~~30.900~~
~~SHEET 6~~	~~LENGTH~~	~~70.0~~	~~72.100~~
~~6~~	~~WIDTH~~	~~30.0~~	~~30.900~~
~~CONTROL POINTS~~			
~~SHEET~~	~~3~~	~~55.0~~	~~56.650~~
~~SHEET~~	~~4~~	~~55.0~~	~~56.650~~
~~SHEET~~	~~5~~	~~72.0~~	~~74.160~~
~~SHEET~~	~~6~~	~~36.0~~	~~37.080~~
~~PHOTO BUTT~~	~~(ALL)~~	~~10.0~~	~~10.300~~
~~TEMP BUTT~~	~~(ALL)~~	~~5.0~~	~~5.150~~

5. INSTALL FASTENERS PER LSP14-15302
6. TOLERANCE ON TRIM OF BLANKETS IS ± 1/2
7. FABRICATE -11 BLANKET ASSY PER LPC280-1.
8. ALL ALUMINIZED MYLAR PARTS SHALL HAVE HOLE PATTERNS LOCATED WITH EXPANDED DIMS. THE EXPANSION RATIO IS TO BE .050 IN/IN (E.G. 10.000 SHOWN EXPANDS TO 10.500.)
ALL ALUMINIZED POLYIMIDE PARTS SHALL HAVE HOLE PATTERNS LOCATED WITH EXPANDED DIMS. THE EXPANSION RATIO IS TO BE .070 IN/IN (E.G. 10.000 SHOWN EXPANDS TO 10.700)
9. LDW280P17700-17 IS INTERCHANGEABLE WITH GS26D-1.
10. WRAP STEMS OF ALL STANDOFFS WHICH ARE RIVETED TO STRUCTURE WITH 1 LAYER OF GT835M-8 TAPE (ON-7) STANDOFF INSTL.

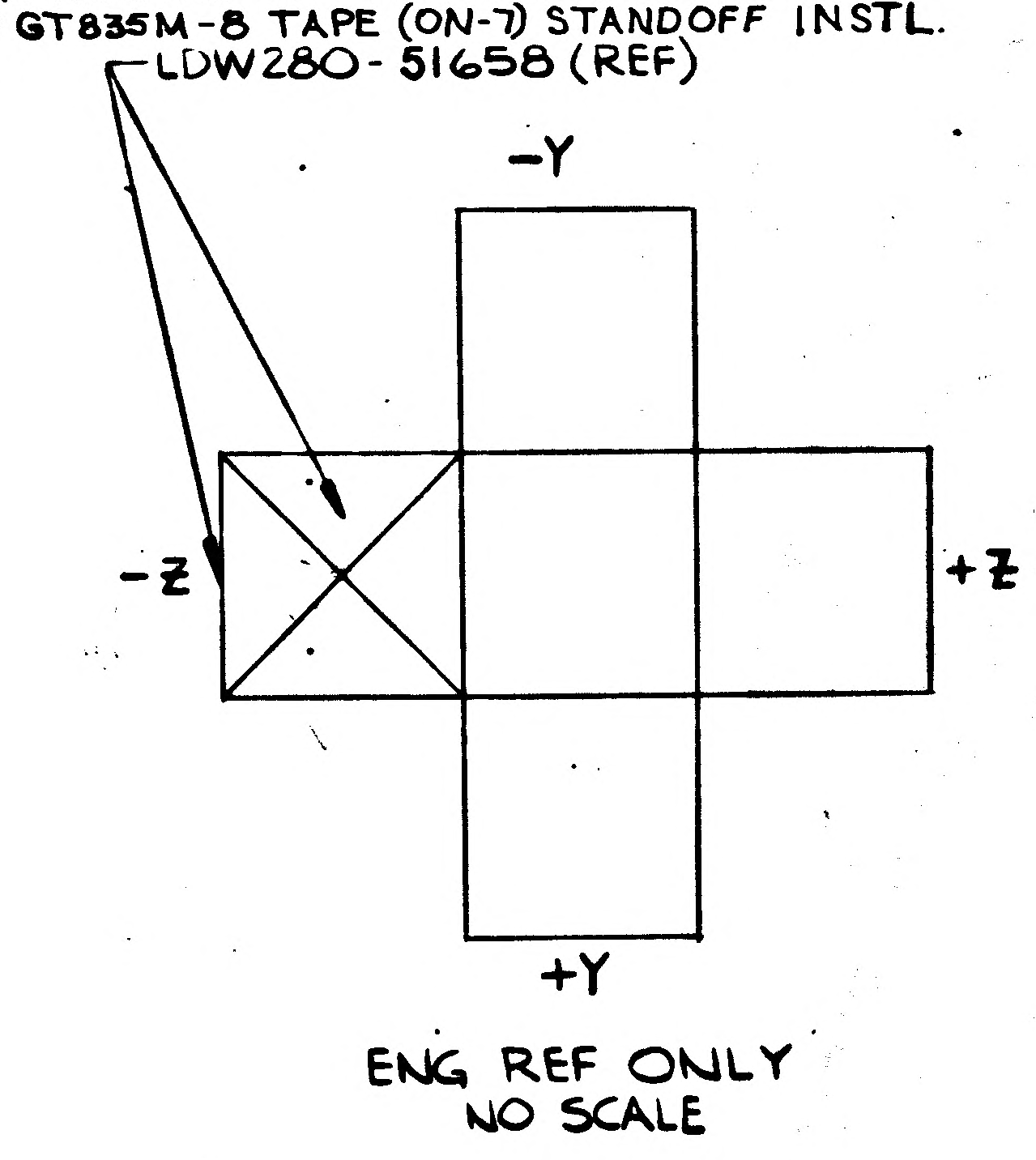
LDW280-51658 (REF)
-Y
-Z
+Z
FWD
+Y

ENG REF ONLY
NO SCALE

11. ASTROQUARTZ RQ754-12 THREAD MAY BE PURCHASED FROM DODGE FIBERS CORP P.O. BOX 124, HOOSICK FALLS, N.Y. CODE IDENT NO. 05712.
12. FINAL SIZE (WITH FOLD AND SEAM LOCATION) OF BLANKET ASSEMBLIES SHALL BE DETERMINED FROM APPROVED MASTER TEMPLATE (AND/OR FULL SIZE MOCKUP).

MANUFACTURING OPERATIONS
UNLESS OTHERWISE SPECIFIED
NOTES CHECKED ✓ APPLY TO THIS DWG.

PART NUMBER AND ALL OTHER MARKINGS IN REGION MARKED ▭ USE BOTH SIDES IF NECESSARY.	
FILLET AND INSIDE CORNER RADII TOLERANCES .016R TO .062R ± .010 .063R TO .250R ± .015 OVER .250R ± .030	
DEPTH SHOWN FOR TAPPED HOLES IS FULL THDS. 2-3 IMP THDS. BEYOND PERMISSIBLE.	
EXTERNAL THREAD LENGTH SHOWN INCLUDES 2 IMPERFECT THREADS MAX.	
DO NOT CADMIUM PLATE & PAINT HOLES OR SURFACES MARKED WITH DOUBLE ASTERISK.	
MISMATCH STEP OF ± .005 PERMISSIBLE DUE TO CHANGE OF CUTTERS AT INSIDE INTERSECTING SURFACES.	
DIAMETERS MARKED MUST BE CONCENTRIC WITHIN FULL INDICATOR READING	
HOLES MUST BE KEPT FREE OF CHROME PLATING SOLUTION.	
ALL DIMENSIONS SHOWN TO BE MET AFTER CADMIUM PLATING. THICKNESS OF PLATE .0003 MIN. TO .0005 MAX. MIN. THICKNESS TO BE .0002 ON THREADED AREAS. NO ALLOWANCE FOR PLATING IN HOLES	
125 SURFACE ROUGHNESS INCLUDING REAMED HOLES PER MIL-STD-10	
200 FOR ALL DRILLED HOLES	
REMOVE ALL BURRS. BREAK ALL EDGES .015-.031	
INSPECTION INFORMATION MINIMUM PERMISSIBLE AVERAGE EDGE DISTANCE MARKED IS	
SYMBOL ƒ DENOTES SURFACE TO BE MACHINED	
UNLESS OTHERWISE SPECIFIED TOLERANCE ON FLANGES IS ± 1/32	
LENGTHS OF AN, NAS & MS AL ALY RIVETS SHORTER THAN 1 INCH ARE NOT SPECIFIED.	✓
TOLERANCE ON LOFTED DELINEATIONS IS ± 1/32	✓

EXCEPT AS NOTED

DWG SIZE 34 X 106

PRINTING INFO ONLY

C
B
A

LDW280-51658A

LDW280-51658A

03/03

NAS 9-1100

CODE IDENT NO 26512

LDW280-51658	SH 3

	GRUMMAN AIRCRAFT ENGRG CORP., BETHPAGE, L. I., NEW YORK			
	SIZE J	CODE IDENT NO. 26512	LDW280-51658	A
LM MODEL OR END ITEM	SCALE FULL		SHEET 3.00	

FOR PHOTO | REPRODUCTION

THIS IS AN ORIGINAL DWG 3 FR

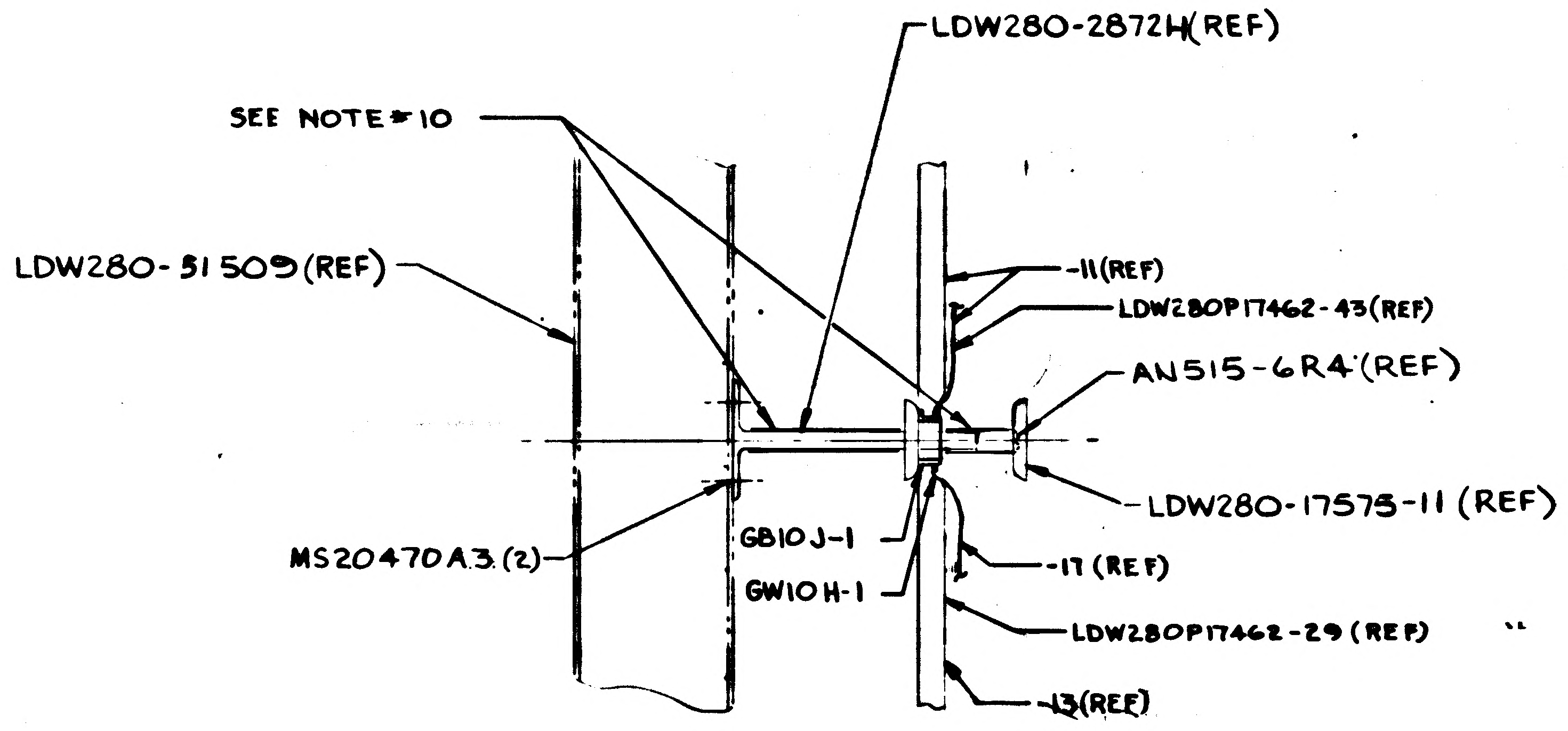
LDW280-2872H(REF)
SEE NOTE#10
LDW280-51509(REF)
-11(REF)
LDW280P17462-43(REF)
AN515-6R4(REF)
LDW280-17575-11 (REF)
MS20470A3(2)
GB10J-1
GW10H-1
-17(REF)
LDW280P17462-29(REF)
-13(REF)

SECTION N-N Ⓐ3
(ZONE 6F SH 4)

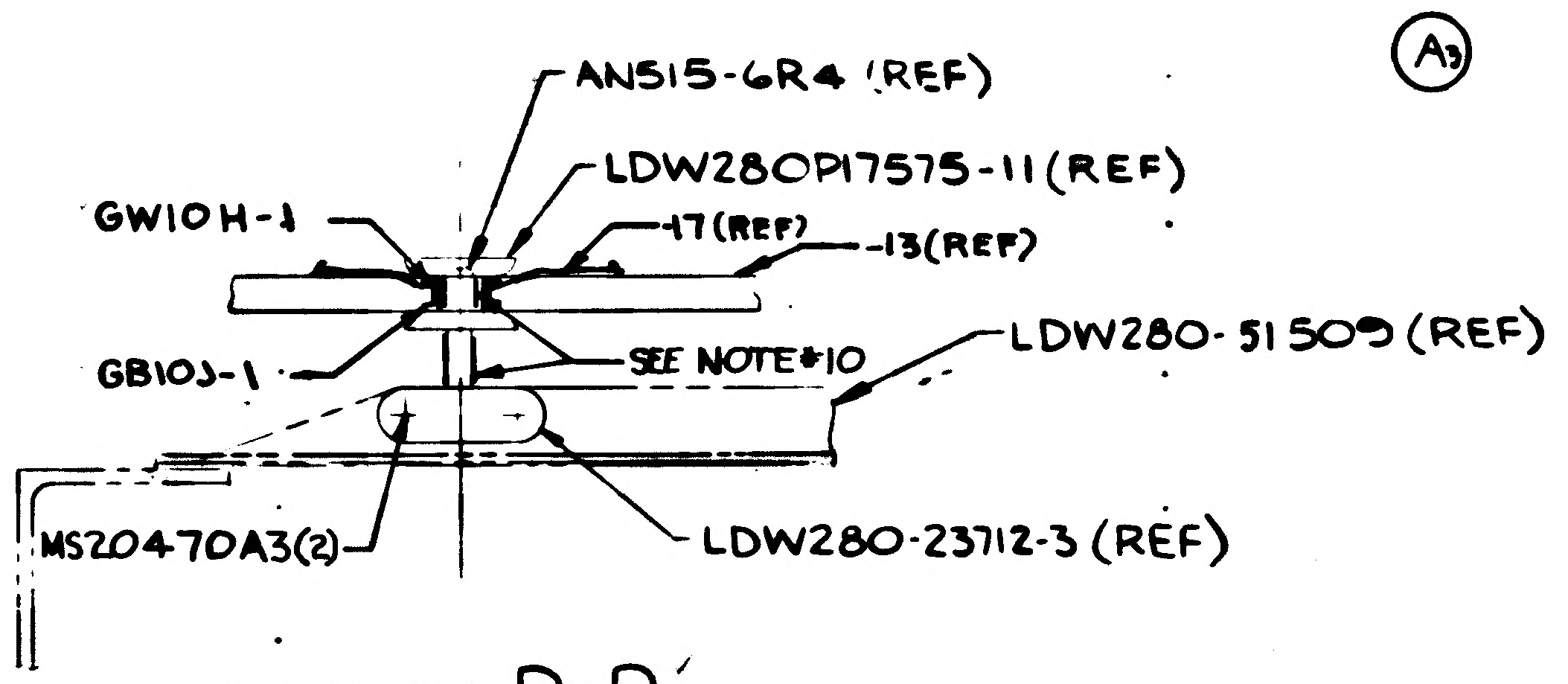
Ⓐ3
AN515-6R4 (REF)
LDW280P17575-11(REF)
GW10H-1
-17(REF)
-13(REF)
SEE NOTE#10
LDW280-51509 (REF)
GB10J-1
MS20470A3(2)
LDW280-23712-3 (REF)

SECTION P-P
(ZONE 7F SH 4)

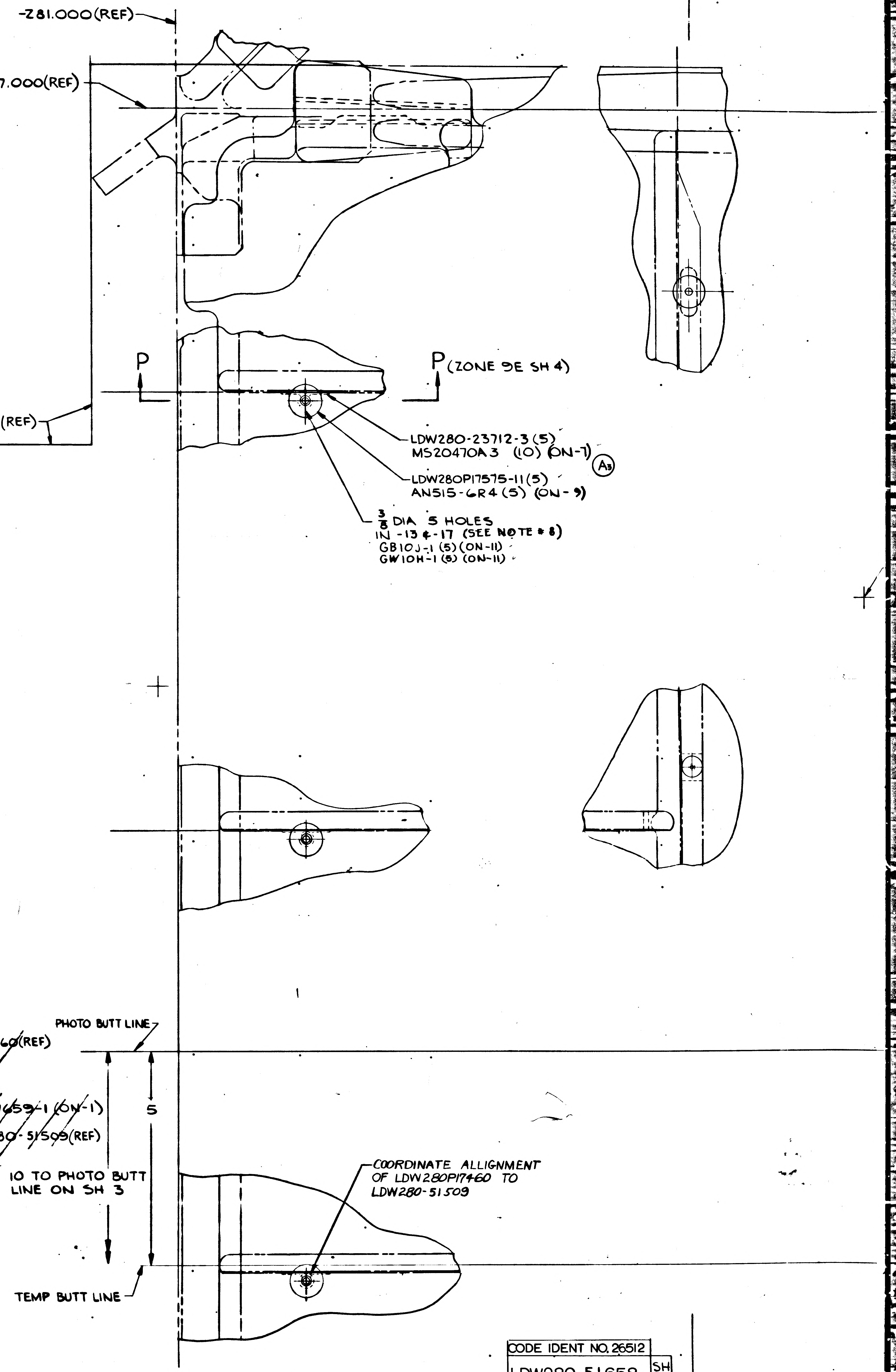
-Z81.000(REF)
-Y27.000(REF)
LDW280-17462-1 (REF)
P
P (ZONE 9E SH 4)
LDW280-23712-3 (5)
MS20470A3 (10) (ON-7)
Ⓐ3
LDW280P17575-11(5)
AN515-6R4 (5) (ON-9)
3/8 DIA 5 HOLES
IN -13 & -17 (SEE NOTE # 8)
GB10J-1 (5) (ON-11)
GW10H-1 (5) (ON-11)
PHOTO BUTT LINE
5
10 TO PHOTO BUTT LINE ON SH 3
TEMP BUTT LINE
COORDINATE ALLIGNMENT OF LDW280P17460 TO LDW280-51509

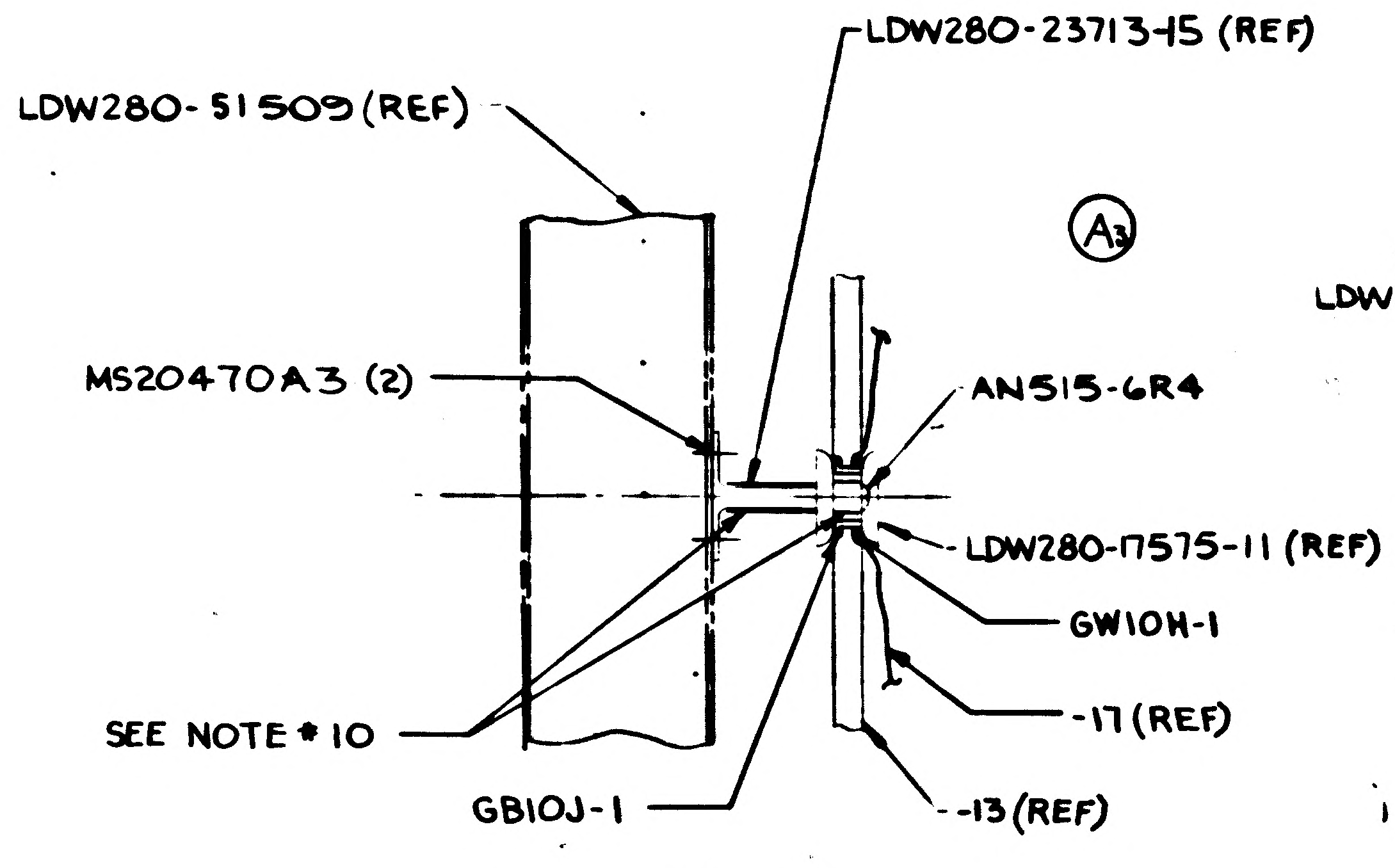
LDW280-23713-15 (REF)
LDW280-51509(REF)
Ⓐ3
MS20470A3 (2)
AN515-6R4
LDW280-17575-11 (REF)
GW10H-1
-17(REF)
SEE NOTE#10
GB10J-1
-13(REF)

SECTION R-R
(ZONE 4E SH 4)

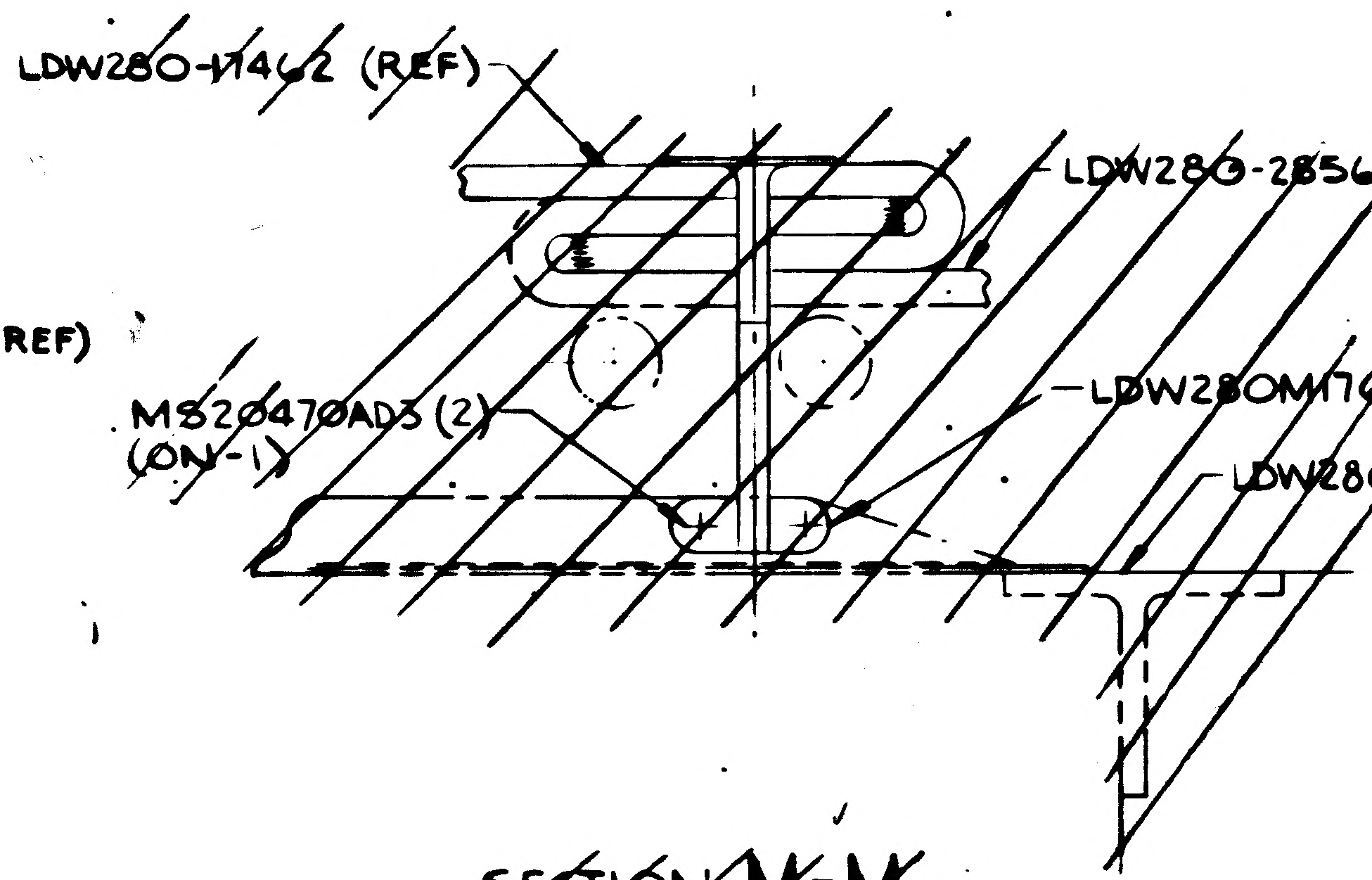
LDW280-17462 (REF)
LDW280-26560(REF)
LDW280M17659-1 (ON-1)
MS20470AD3 (2) (ON-1)
LDW280-51509(REF)

SECTION M-M
(ZONE 3D SH4)

01/03 NAS 9-1100

CODE IDENT NO. 26512
LDW280-51658 SH 4

7
6
5
4
3
-Z 27.000 (REF)
-Y2
9E SH 4)
N
N
$\frac{3}{8}$ DIA 4 HOLES
IN-134-17 (SEE NOTE #8)
GB10J-1 (4) (ON-11)
GW10H-1 (4) (ON-11)
LDW280-17575-11 (4)
AN515-6R 4 (4) (ON-9)
LDW280-28721-1 (4)
MS20470A3 (8) (ON-7)
LOCATE FROM LDW280-28721-1
(ZONE 9F SH 4)
A3
2-3 (5)
(10) (ON-7)
A3
5-11 (5)
(5) (ON-9)
NOTE #8)
VENT PER LPC280-2 A7
VENT PER LPC280-2 A7
R
$\frac{3}{8}$ DIA HOLE
IN-134-17 (SEE NOTE #8)
MS20470A3 (2) (ON-7)
LDW280-23713-15 (ON-7)
LDW280P17575-11 (ON-9)
AN515-6R4 (ON-9)
GB10J-1 (ON-11)
GW10H-1 (ON-11)
A3
55
R (ZONE 10D SH 4)
PHO
10 TO PHOT LINE ON S
5
IMENT
TO
(ZONE 9D SH 4)
M
M
TEMP BUT
$\frac{3}{8}$ DIA HOLE
IN LDW280P17462-29
7
6
5
4
3

02/03 NAS 9-1100

CODE IDENT NO. 26512
LDW280-51658 SH 4

CODE IDENT NO. 26512
LDW280-51658 SH 4

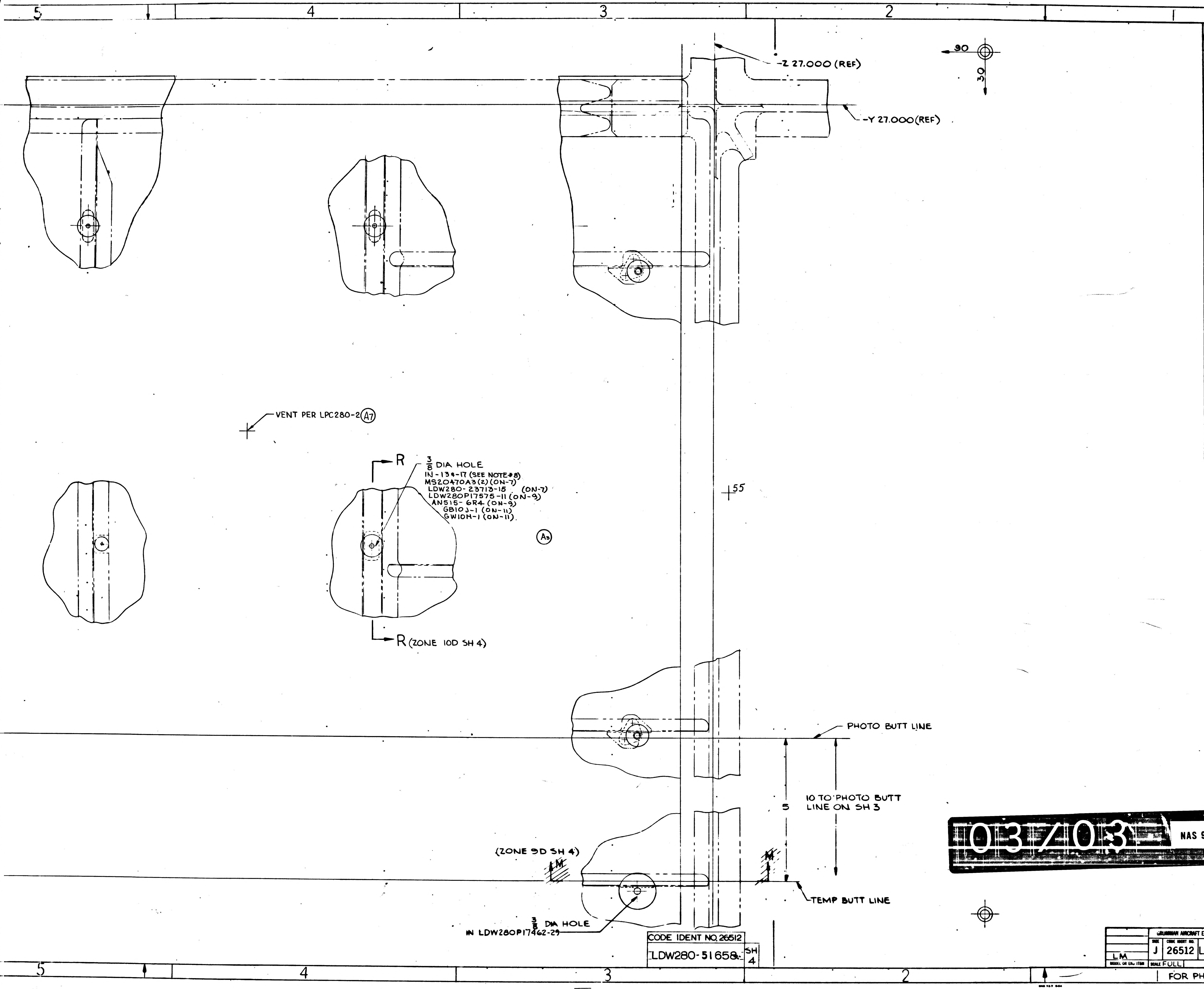
5
4
3
2
1
-Z 27.000 (REF)
-Y 27.000 (REF)
90
30
VENT PER LPC280-2 (A7)
R
3/8 DIA HOLE
IN-134-17 (SEE NOTE #8)
MS20470A3 (2) (ON-7)
LDW280-23713-15 (ON-7)
LDW280P17575-11 (ON-9)
AN515-6R4 (ON-9)
GB10J-1 (ON-11)
GW10N-1 (ON-11)
(A3)
55
R (ZONE 10D SH 4)
PHOTO BUTT LINE
10 TO PHOTO BUTT LINE ON SH 3
5
(ZONE 9D SH 4)
M
M
TEMP BUTT LINE
3/8 DIA HOLE IN LDW280P17462-29
CODE IDENT NO. 26512
LDW280-51658 SH 4
03/03
NAS 9-1100

MANUFACTURING OPERATIONS
UNLESS OTHERWISE SPECIFIED
NOTES CHECKED ✓ APPLY TO THIS DWG.

PART NUMBER AND ALL OTHER MARKINGS IN REGION MARKED ▭ USE BOTH SIDES IF NECESSARY.

FILLET AND INSIDE CORNER RADII TOLERANCES
.016R TO .062R ± .008
.063R TO .250R ± .015
OVER .250R ± .030

DEPTH SHOWN FOR TAPPED HOLES IS FULL THDS. 2-3 IMP THDS. BEYOND PERMISSIBLE.

EXTERNAL THREAD LENGTH SHOWN INCLUDES 2 IMPERFECT THREADS MAX.

DO NOT CADMIUM PLATE & PAINT HOLES OR SURFACES MARKED WITH DOUBLE ASTERISK.

MISMATCH STEP OF ± .005 PERMISSIBLE DUE TO CHANGE OF CUTTERS AT INSIDE INTERSECTING SURFACES.

DIAMETERS MARKED MUST BE CONCENTRIC WITHIN FULL INDICATOR READING

HOLES MUST BE KEPT FREE OF CHROME PLATING SOLUTION.

ALL DIMENSIONS SHOWN TO BE MET AFTER CADMIUM PLATING. THICKNESS OF PLATE .0003 MIN. TO .0005 MAX. MIN. THICKNESS TO BE .0002 ON THREADED AREAS. NO ALLOWANCE FOR PLATING IN HOLES

125 SURFACE ROUGHNESS INCLUDING REAMED HOLES PER MIL-STD-10

200 FOR ALL DRILLED HOLES

REMOVE ALL BURRS. BREAK ALL EDGES .015-.031

INSPECTION INFORMATION MINIMUM PERMISSIBLE AVERAGE EDGE DISTANCE MARKED IS

SYMBOL ✓ DENOTES SURFACE TO BE MACHINED

UNLESS OTHERWISE SPECIFIED TOLERANCE ON FLANGES IS ± 1/32

LENGTHS OF AN, NAS & MS AL ALY RIVETS SHORTER THAN 1 INCH ARE NOT SPECIFIED.

TOLERANCE ON LOFTED DELINEATIONS IS

DWG SIZE 34 X 106

PRINTING INFO ONLY
FULL SIZE SHEET AREA (36 X 112) = 27.9 SQ. FT.
1/2 SIZE SHEET AREA (1/4 OF FULL) = 6.9 SQ. FT.
PRINT TRIM LINE

F
E
LDW280-51658 A
LDW280-51658 A

GRUMMAN AIRCRAFT ENGRG CORP., BETHPAGE, L. I., NEW YORK

MODEL OR END ITEM	SIZE	CODE IDENT NO.		
LM	J	26512	LDW280-51658	A

SCALE FULL SHEET 4.00

FOR PHOTO REPRODUCTION

THIS IS AN ORIGINAL DWG

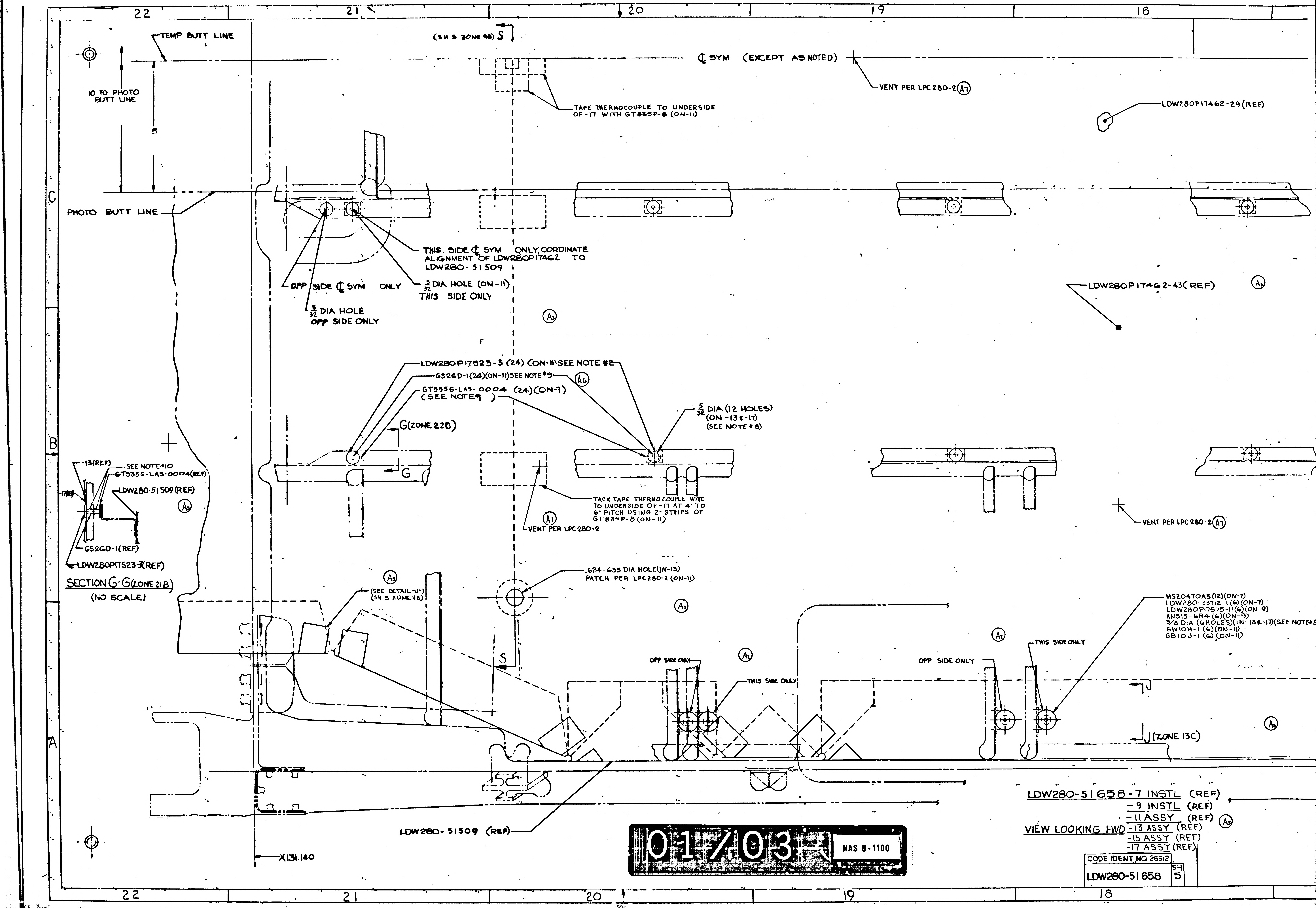
22
21
20
19
18
C
B
A
TEMP BUTT LINE
10 TO PHOTO BUTT LINE
5
PHOTO BUTT LINE
(SH. 3 ZONE 9B) S
℄ SYM (EXCEPT AS NOTED)
VENT PER LPC280-2 (A7)
TAPE THERMOCOUPLE TO UNDERSIDE OF -17 WITH GT835P-8 (ON-11)
LDW280P17462-29 (REF)
THIS SIDE ℄ SYM ONLY CORDINATE ALIGNMENT OF LDW280P17462 TO LDW280-51509
OPP SIDE ℄ SYM ONLY
5/32 DIA HOLE (ON-11) THIS SIDE ONLY
5/32 DIA HOLE OPP SIDE ONLY
(A3)
LDW280P17462-43 (REF)
(A3)
LDW280P17523-3 (24) (ON-11) SEE NOTE #2
GS26D-1 (24)(ON-11) SEE NOTE #9
(A6)
GT535G-LAS-0004 (24)(ON-7) (SEE NOTE#9)
G (ZONE 22B)
G
5/32 DIA (12 HOLES) (ON -13 & -17) (SEE NOTE # 8)
TACK TAPE THERMOCOUPLE WIRE TO UNDERSIDE OF -17 AT 4" TO 6" PITCH USING 2" STRIPS OF GT835P-8 (ON-11)
(A7)
VENT PER LPC280-2
VENT PER LPC280-2 (A7)
-13 (REF)
SEE NOTE #10
GT535G-LAS-0004 (REF)
-17 (REF)
LDW280-51509 (REF)
(A3)
GS26D-1 (REF)
LDW280P17523-3 (REF)
SECTION G-G (ZONE 21B)
(NO SCALE)
(A5)
(SEE DETAIL "U") (SH. 3 ZONE 11B)
.624-.633 DIA HOLE (IN-13) PATCH PER LPC280-2 (ON-11)
(A3)
S
OPP SIDE ONLY
(A2)
THIS SIDE ONLY
(A2)
OPP SIDE ONLY
THIS SIDE ONLY
MS20470A3 (12)(ON-7)
LDW280-23712-1 (6)(ON-7)
LDW280P17575-11 (6)(ON-9)
AN515-6R4 (6)(ON-9)
3/8 DIA (6 HOLES)(IN-13 & -17)(SEE NOTE#
GW10H-1 (6)(ON-11)
GB10J-1 (6)(ON-11)
J
J (ZONE 13C)
(A3)
LDW280-51509 (REF)
X131.140
(A3)

LDW280-51658-7 INSTL (REF)
-9 INSTL (REF)
-11 ASSY (REF)
VIEW LOOKING FWD -13 ASSY (REF)
-15 ASSY (REF)
-17 ASSY (REF)

CODE IDENT NO 26512

LDW280-51658 SH 5

01/03

NAS 9-1100

18
17
16
15
14
TEMP BUTT LINE
10 TO PHOTO BUTT LINE
5
PHOTO BUTT LINE
90
VENT PER LPC280-2 (A7)
LDW280P17462-29 (REF)
LDW280P17462-43 (REF)
(A3)
VENT PER LPC 280-2 (A7)
VENT PER LPC 280-2 (A7)
-17(REF)
SEE NOTE#10
LDW280P17575-11(REF)
GW10H-1
GB10J-1
SECTION J-J
NO SC
LDW280-28555(REF)
LDW280P17575-11(REF)
LDW280P17936-51 (REF)
LDW280-23712-1 (REF)
72
LDW280P17462-11(REF)
LDW280-28509 (REF)
SECTION H-H (ZONE 13A)
NO SCALE
LDW280P17462-11(REF)
LDW280P17936-47 (ON-5)
H
ZONE 14B
(SEE N
3
H
34(REF)
2½
DETAIL F (ZONE 15A)
(L.H. SIDE ONLY)
NO SCALE
MS20470A3(12)(ON-7)
LDW280-23712-1(6)(ON-7)
LDW280P17575-11(6)(ON-9)
AN515-6R4(6)(ON-9)
3/8 DIA (6 HOLES)(IN-13 & -17)(SEE NOTE#8)
GW10H-1 (6)(ON-11)
GB10J-1 (6)(ON-11)
ONLY
(A1)
OPP SIDE ONLY
THIS SIDE ONLY
J
J (ZONE 13C)
(A3)
(A3)
X196.00 (REF)
Y27.00(REF)
SEE DETAIL "F" (FOR L.H. SIDE ONLY)
(ZONE 13A)
0-51658-7 INSTL (REF)
-9 INSTL (REF)
-11 ASSY (REF) (A3)
OKING FWD -13 ASSY (REF)
-15 ASSY (REF)
-17 ASSY (REF)

CODE IDENT NO. 26512
LDW280-51658 SH 5

02/03 NAS 9-1100

CODE IDENT NO. 26512
LDW280-51658 SH 5

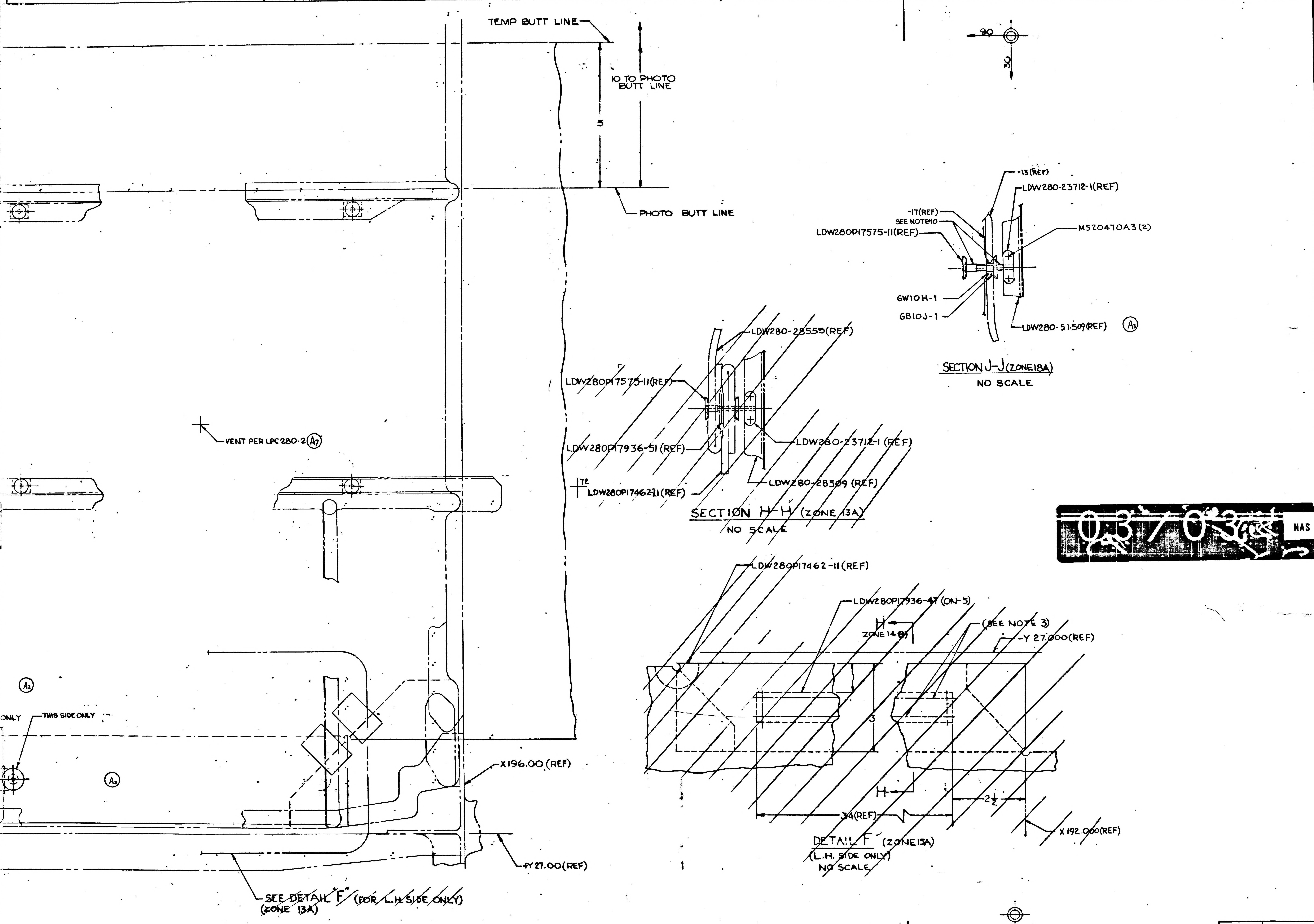
16
15
14
13
12
TEMP BUTT LINE
10 TO PHOTO BUTT LINE
5
PHOTO BUTT LINE
30
30
-13(REF)
LDW280-23712-1(REF)
-17(REF)
SEE NOTE10
LDW280P17575-11(REF)
MS20470A3(2)
GW10H-1
GB10J-1
LDW280-51509(REF)
A3
SECTION J-J (ZONE18A)
NO SCALE
LDW280-28559(REF)
LDW280P17575-11(REF)
LDW280P17936-51 (REF)
LDW280-23712-1 (REF)
LDW280-28509 (REF)
72
LDW280P17462-11(REF)
SECTION H-H (ZONE 13A)
NO SCALE
VENT PER LPC280-2 A7
LDW280P17462-11 (REF)
LDW280P17936-47 (ON-5)
H
ZONE 14-B
(SEE NOTE 3)
-Y 27.000(REF)
3
H
34(REF)
2½
X192.000(REF)
DETAIL "F" (ZONE15A)
(L.H. SIDE ONLY)
NO SCALE
A2
ONLY
THIS SIDE ONLY
A3
X196.00 (REF)
Y27.00(REF)
SEE DETAIL "F" (FOR L.H. SIDE ONLY)
(ZONE 13A)
C
B
A
LDW280-51658 A
LDW280-51658 A
03703
NAS 9-1100

MANUFACTURING OPERATIONS

UNLESS OTHERWISE SPECIFIED NOTES CHECKED ✓ APPLY TO THIS DWG.

PART NUMBER AND ALL OTHER MARKINGS IN REGION MARKED ☒ USE BOTH SIDES IF NECESSARY.

FILLET AND INSIDE CORNER RADII TOLERANCES
.016R TO .062R ± .010
.063R TO .250R ± .015
OVER .250R ± .030

DEPTH SHOWN FOR TAPPED HOLES IS FULL THDS. 2-3 IMP THDS. BEYOND PERMISSIBLE.

EXTERNAL THREAD LENGTH SHOWN INCLUDES 2 IMPERFECT THREADS MAX.

DO NOT CADMIUM PLATE & PAINT HOLES OR SURFACES MARKED WITH DOUBLE ASTERISK.

MISMATCH STEP OF ± .005 PERMISSIBLE, DUE TO CHANGE OF CUTTERS AT INSIDE INTERSECTING SURFACES.

DIAMETERS MARKED MUST BE CONCENTRIC WITHIN FULL INDICATOR READING

HOLES MUST BE KEPT FREE OF CHROME PLATING SOLUTION.

ALL DIMENSIONS SHOWN TO BE MET AFTER CADMIUM PLATING. THICKNESS OF PLATE .0003 MIN. TO .0005 MAX. MIN. THICKNESS TO BE .0002 ON THREADED AREAS. NO ALLOWANCE FOR PLATING IN HOLES

125 SURFACE ROUGHNESS INCLUDING REAMED HOLES PER MIL-STD-10

250 FOR ALL DRILLED HOLES

REMOVE ALL BURRS. BREAK ALL EDGES .015-.031

INSPECTION INFORMATION MINIMUM PERMISSIBLE AVERAGE EDGE DISTANCE MARKED IS

SYMBOL ƒ DENOTES SURFACE TO BE MACHINED

UNLESS OTHERWISE SPECIFIED TOLERANCE ON FLANGES IS ± 1/32

LENGTHS OF AN, NAS & MS AL ALY RIVETS SHORTER THAN 1 INCH ARE NOT SPECIFIED.

TOLERANCE ON LOFTED DELINEATIONS IS

DWG SIZE 34 X 106

PRINTING INFO ONLY
FULL SIZE SHEET AREA (36 X 110) = 27.5 SQ. FT.
SIZE SHEET AREA (1/4 OF FULL) = 6.99 SQ. FT.
PRINT THIS LINE

CODE IDENT NO. 26512
LDW280-51658 SH 5

GRUMMAN AIRCRAFT ENGRG CORP., BETHPAGE, L.I., NEW YORK

L.M.	SIZE J	CODE IDENT NO. 26512	LDW280-51658	A
MODEL OR END ITEM	SCALE FULL & NOTED		SHEET 5 OF ?	

FOR PHOTO REPRODUCTION

THIS IS AN ORIGINAL DRAWING

31R

LDW280-51658

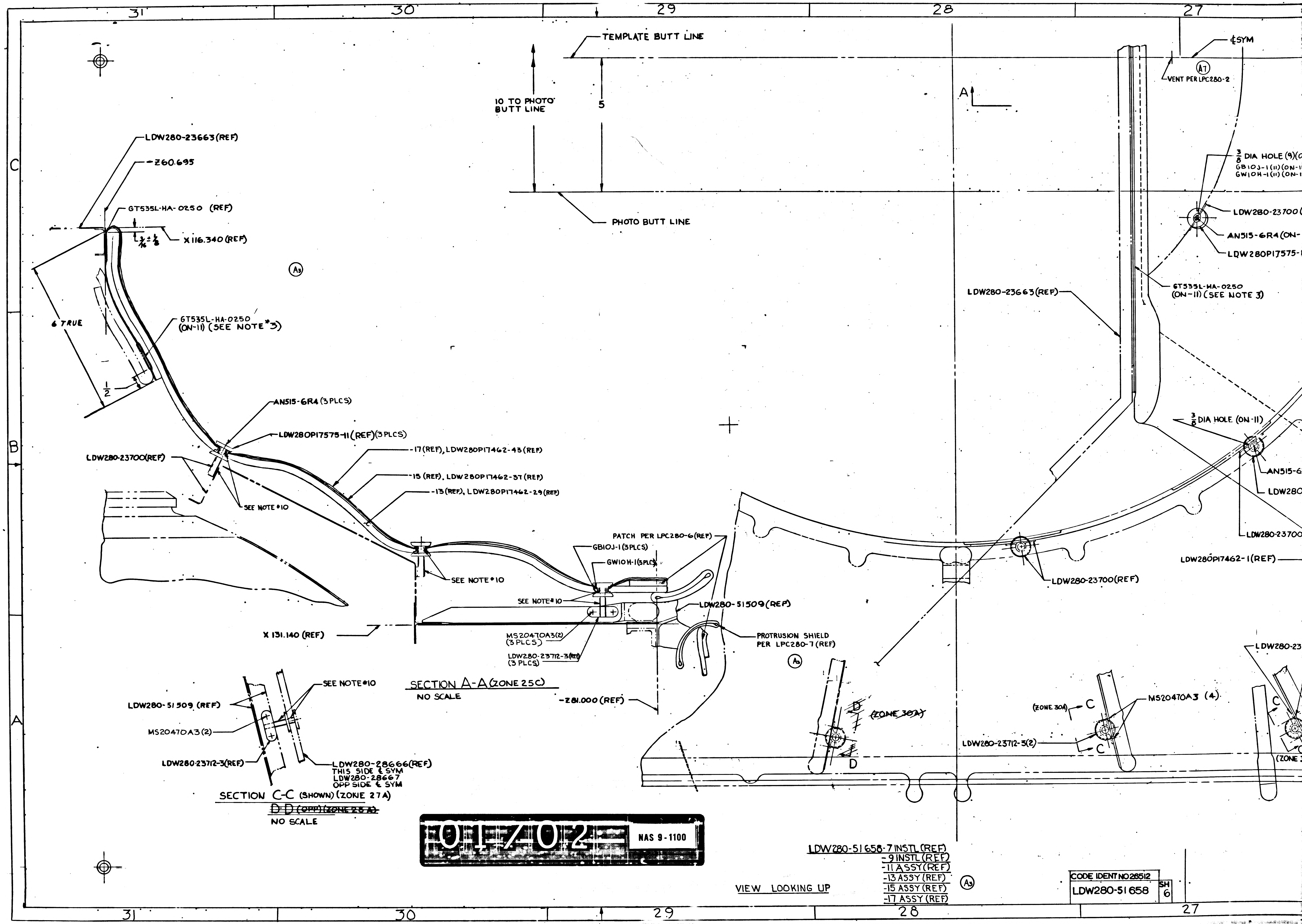

31
30
29
28
27
C
B
A
TEMPLATE BUTT LINE
10 TO PHOTO BUTT LINE
5
PHOTO BUTT LINE
¢ SYM
A7
VENT PER LPC280-2
A
LDW280-23663(REF)
-Z60.695
GT535L-HA-0250 (REF)
X 116.340 (REF)
6 TRUE
1/2
GT535L-HA-0250 (ON-11) (SEE NOTE *3)
A3
AN515-6R4 (3 PLCS)
LDW280P17575-11 (REF) (3 PLCS)
-17 (REF), LDW280P17462-43 (REF)
-15 (REF), LDW280P17462-37 (REF)
-13 (REF), LDW280P17462-29 (REF)
LDW280-23700(REF)
SEE NOTE *10
SEE NOTE *10
PATCH PER LPC280-6 (REF)
GB10J-1 (3 PLCS)
GW10H-1 (3 PLCS)
SEE NOTE *10
LDW280-51509 (REF)
X 131.140 (REF)
MS20470A3(2) (3 PLCS)
LDW280-23712-3(REF) (3 PLCS)
PROTRUSION SHIELD PER LPC280-7 (REF)
A3
SECTION A-A (ZONE 25C)
NO SCALE
-Z81.000 (REF)
SEE NOTE *10
LDW280-51509 (REF)
MS20470A3(2)
LDW280-23712-3(REF)
LDW280-28666(REF) THIS SIDE ¢ SYM
LDW280-28667 OPP SIDE ¢ SYM
SECTION C-C (SHOWN) (ZONE 27A)
D-D (OPP) ~~(ZONE 28 A)~~
NO SCALE
3/8 DIA HOLE (9)(O
GB10J-1 (11) (ON-1
GW10H-1 (11) (ON-1
LDW280-23700(
AN515-6R4 (ON-
LDW280P17575-
LDW280-23663(REF)
GT535L-HA-0250 (ON-11) (SEE NOTE 3)
3/8 DIA HOLE (ON-11)
AN515-6
LDW280
LDW280-23700
LDW280P17462-1(REF)
LDW280-23700(REF)
LDW280-23
D
~~(ZONE 30A)~~
D
(ZONE 30A)
C
C
MS20470A3 (4)
LDW280-23712-3(2)
C
(ZONE
VIEW LOOKING UP
A3

01702 NAS 9-1100

LDW280-51658-7 INSTL (REF)
-9 INSTL (REF)
-11 ASSY (REF)
-13 ASSY (REF)
-15 ASSY (REF)
-17 ASSY (REF)

CODE IDENT NO 26512	
LDW280-51658	SH 6

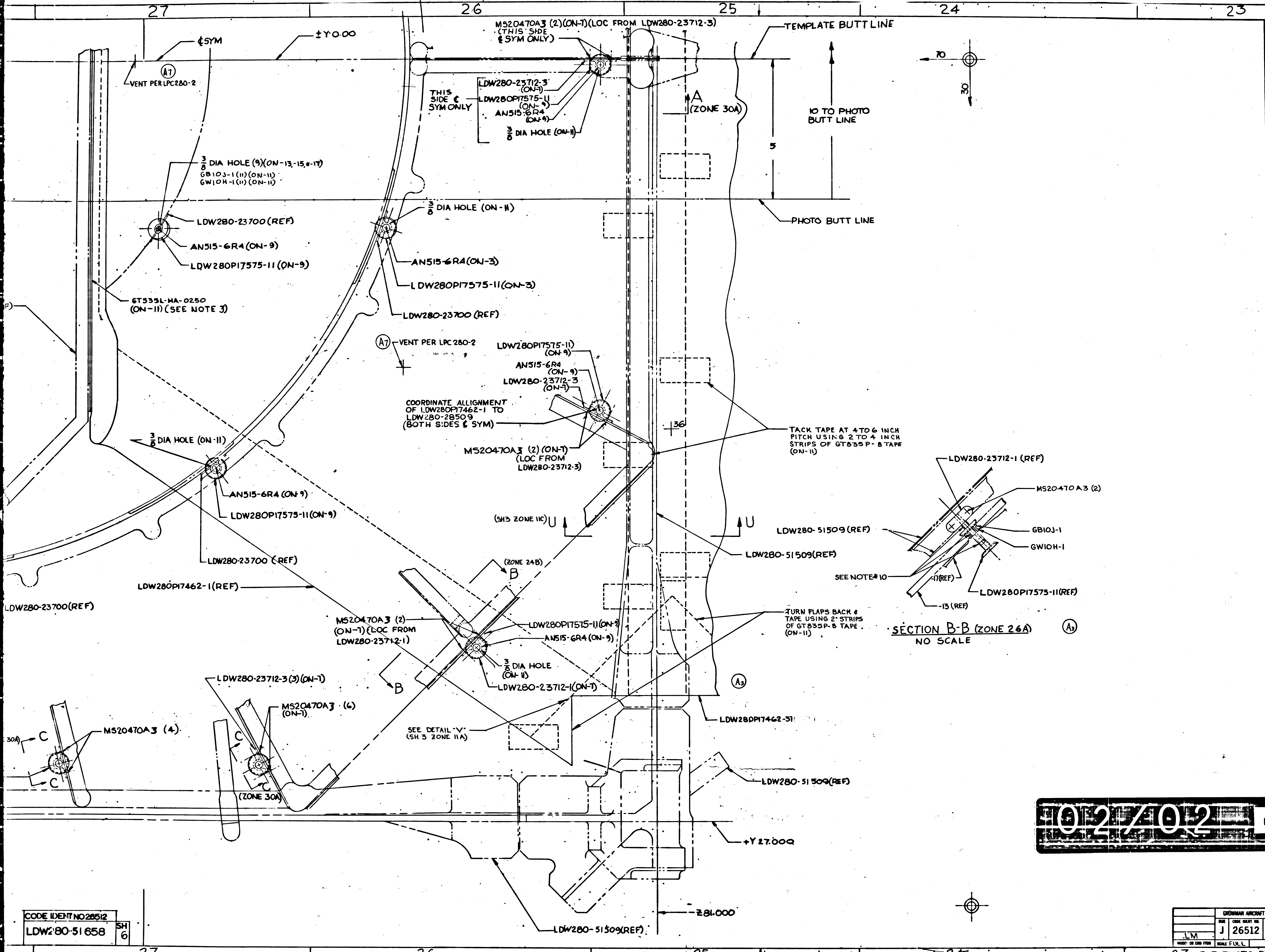
27
26
25
24
23
¢SYM
±Y 0.00
MS20470A3 (2)(ON-7)(LOC FROM LDW280-23712-3)
(THIS SIDE ¢ SYM ONLY)
TEMPLATE BUTT LINE
(A7) VENT PER LPC280-2
THIS SIDE ¢ SYM ONLY
LDW280-23712-3 (ON-1)
LDW280P17575-11 (ON-9)
AN515-6R4 (ON-9)
3/8 DIA HOLE (ON-11)
A (ZONE 30A)
10 TO PHOTO BUTT LINE
5
70
30
3/8 DIA HOLE (9)(ON-13,-15,&-17)
GB10J-1 (11)(ON-11)
GW10H-1 (11)(ON-11)
3/8 DIA HOLE (ON-11)
LDW280-23700 (REF)
AN515-6R4 (ON-9)
LDW280P17575-11 (ON-9)
AN515-6R4 (ON-3)
LDW280P17575-11 (ON-3)
PHOTO BUTT LINE
6T535L-HA-0250 (ON-11) (SEE NOTE 3)
LDW280-23700 (REF)
(A7) VENT PER LPC 280-2
LDW280P17575-11 (ON-9)
AN515-6R4 (ON-9)
LDW280-23712-3 (ON-1)
COORDINATE ALLIGNMENT OF LDW280P17462-1 TO LDW280-28509 (BOTH SIDES ¢ SYM)
36
MS20470A3 (2) (ON-7) (LOC FROM LDW280-23712-3)
TACK TAPE AT 4 TO 6 INCH PITCH USING 2 TO 4 INCH STRIPS OF GT835P-8 TAPE (ON-11)
3/8 DIA HOLE (ON-11)
AN515-6R4 (ON-9)
LDW280P17575-11 (ON-9)
(SH3 ZONE 11C) U
U
LDW280-51509 (REF)
LDW280-23700 (REF)
LDW280P17462-1 (REF)
LDW280-23700 (REF)
(ZONE 24B) B
MS20470A3 (2) (ON-7) (LOC FROM LDW280-23712-1)
LDW280P17515-11 (ON-9)
AN515-6R4 (ON-9)
3/8 DIA HOLE (ON-11)
LDW280-23712-1 (ON-1)
B
TURN FLAPS BACK & TAPE USING 2" STRIPS OF GT835P-8 TAPE (ON-11)
(A3)
LDW280-23712-3 (3) (ON-1)
MS20470A3 (6) (ON-1)
30A) C
MS20470A3 (4)
C
C
C
(ZONE 30A)
SEE DETAIL "V" (SH 3 ZONE 11A)
LDW280P17462-31
LDW280-51509 (REF)
+Y 27.000
Z 81.000
LDW280-51509 (REF)
LDW280-23712-1 (REF)
MS20470A3 (2)
LDW280-51509 (REF)
GB10J-1
GW10H-1
SEE NOTE #10
-17 (REF)
-13 (REF)
LDW280P17575-11 (REF)
SECTION B-B (ZONE 26A)
NO SCALE
(A3)
C
B
A
LDW280-51658 A
LDW280-51658 A
CODE IDENT NO 26512
LDW280-51658 SH 6
27
26
25
24

02/02 NAS 9-1100

MANUFACTURING OPERATIONS
UNLESS OTHERWISE SPECIFIED
NOTES CHECKED ✓ APPLY TO THIS DW

PART NUMBER AND ALL OTHER MARKINGS IN REGION MARKED ☒ USE BOTH SIDES IF NECESSARY.
FILLET AND INSIDE CORNER RADII TOLERANCES .000R TO .062R ± .000 .063R TO .250R ± .015 OVER .250R ± .000
DEPTH SHOWN FOR TAPPED HOLES IS FULL THDS. 2-3 IMP THDS. BEYOND PERMISSIBLE.
EXTERNAL THREAD LENGTH SHOWN INCLUDES 2 IMPERFECT THREADS MAX.
DO NOT CADMIUM PLATE & PAINT HOLES OR SURFACES MARKED WITH DOUBLE ASTERISK.
MISMATCH STEP OF ± .005 PERMISSIBLE DUE TO CHANGE OF CUTTERS AT INSIDE INTERSECTING SURFACES.
DIAMETERS MARKED MUST BE CONCENTRIC WITHIN FULL INDICATOR READING
HOLES MUST BE KEPT FREE OF CHROME PLATING SOLUTION.
ALL DIMENSIONS SHOWN TO BE MET AFTER CADMIUM PLATING. THICKNESS OF PLATE .0003 MIN. TO .0005 MAX. MIN. THICKNESS TO BE .0002 ON THREADED AREAS. NO ALLOWANCE FOR PLATING IN HOLES
125 SURFACE ROUGHNESS INCLUDING REAMED HOLES PER MIL-STD-10
200 FOR ALL DRILLED HOLES
REMOVE ALL BURRS. BREAK ALL EDGES .015-.031
INSPECTION INFORMATION MINIMUM PERMISSIBLE AVERAGE EDGE DISTANCE MARKED IS
SYMBOL √ DENOTES SURFACE TO BE MACHINED
UNLESS OTHERWISE SPECIFIED TOLERANCE ON FLANGES ... ± 1/32
LENGTHS OF AN, NAS & MS AL ALY RIVETS SHORTER THAN 1 INCH ARE NOT SPECIFIED.
TOLERANCE ON LOFTED DELINEATIONS IS

DWG SIZE 36 X 99

PRINTING INFO ONLY
FULL SIZE SHEET AREA . 36×99 24.75 SQ FT.
1/2 SIZE SHEET AREA (1/4 OF FULL) = 6.18 SQ FT.

PRINT TRIM LINE

	GRUMMAN AIRCRAFT ENGRG CORP., BETHPAGE, L. I., NEW YORK			
LM	SIZE J	CODE IDENT NO. 26512	LDW280-51658	A
MODEL OR END ITEM	SCALE FULL		SHEET 6.00	

23 FOR PHOTO REPRODUCTION

THIS IS AN ORIGINAL DRAWING ... 3FR

GRUMMAN AIRCRAFT ENGINEERING CORP.
CODE IDENT NO. 26512
ENGINEERING ORDER

*

DWG NO. LDW28C-51658 EO NO. A2
CONTROL INFO NO. LDW280-9550

ON SHT 5 ZONES 17A TO 20A REVISE AS SHOWN BELOW.

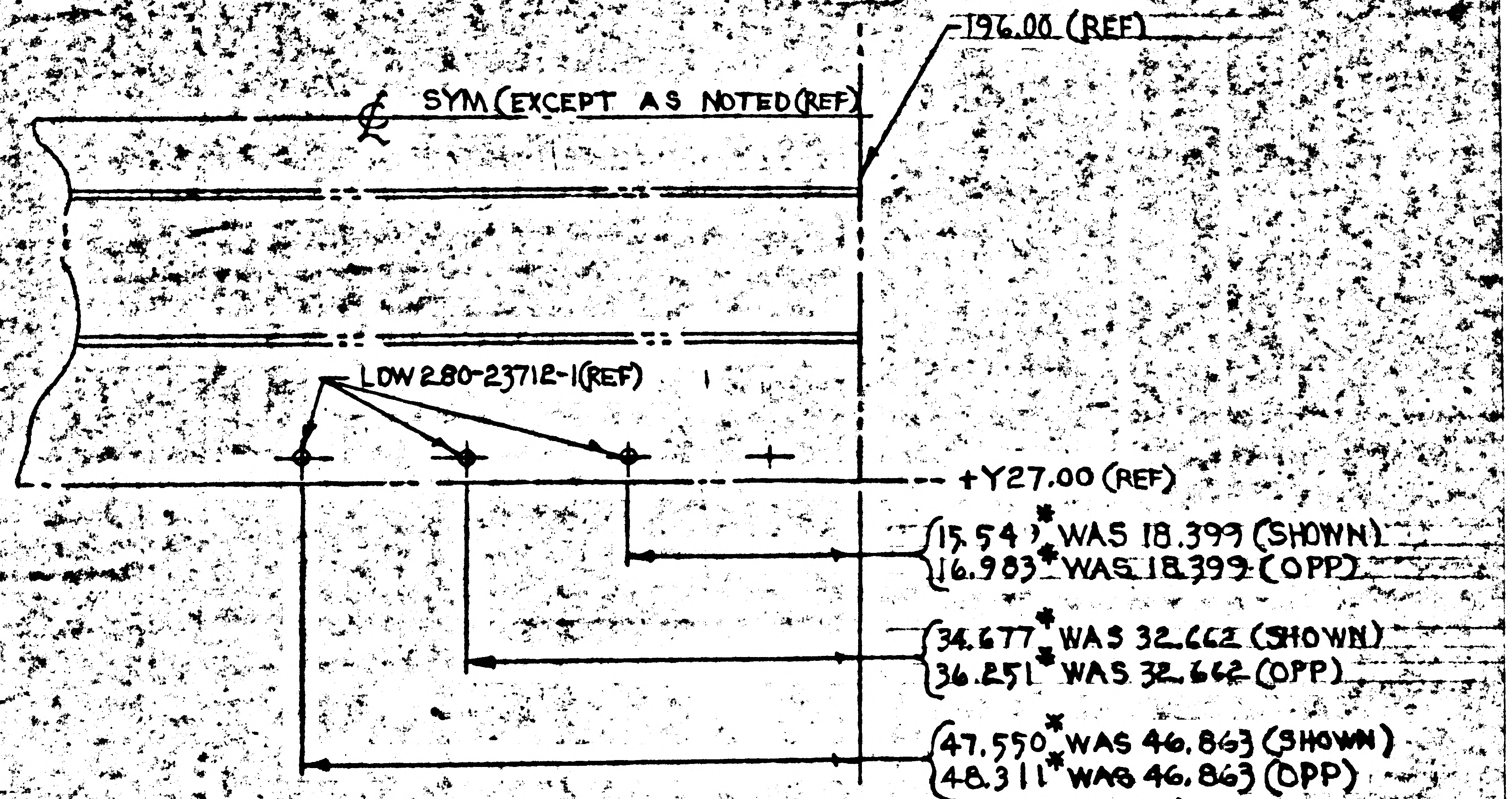
196.00 (REF)
℄ SYM (EXCEPT AS NOTED (REF)
LDW280-23712-1 (REF)
+Y27.00 (REF)
15.549* WAS 18.399 (SHOWN)
16.983* WAS 18.399 (OPP)
34.677* WAS 32.662 (SHOWN)
36.251* WAS 32.662 (OPP)
47.550* WAS 46.863 (SHOWN)
48.311* WAS 46.863 (OPP)

* FOR PHOTO LOFT OF -5 ASSY:

15.549 EXPANDS TO 16.015
16.983 17.492
34.677 35.717
36.251 37.339
47.550 48.977
48.311 EXPANDS TO 49.760

(EXISTING HOLES MAY REMAIN OPEN)

NOTE: DIMS INDICATED WITH * ARE ALSO LOFTED DIMS. (DIMS NOT TO BE ADDED TO DWG)

ON SHT 3.00 ADD TO NOTE 1 "CURE RANGE 1 OR ROOM TEMP CURE FOR 7 DAYS PERMITTED".
REMOVE EFF REQMTS OF LEM 2, 3, 4, 5 & 6

THIS IS AN ORIGINAL E.O.

DETAIL SPEC REQ		CL II ENGRG CHG		CL I ENGRG CHG		5 4

REASON FOR EO	DESCRIPTION OF EO	GAEC RELEASE
INCORRECT STANDOFF LOCATIONS	RELOCATED STANDOFFS & ADDED INFO TO NOTE 1 REMOVED EFF REQ OF LEM 2, 3, 4, 5 & 6	LE 8-15-66

MODEL	PROCURING ACTIVITY NO.	GAEC UNIT NO.	SUB CONTR UNIT NO.	DRAWING CHANGE REQD REVISE DWG	RECORD EO	DISPOSITION OF PARTS REWORK	SCRAP
LEM		LEM 1 (31)		✓		✓	

APPROVED BY	VD1	SUPPORT WTS	RELIAB GROUP	GROUP LEADER	GROUP	LIAISON ENGRG	ENGRG	GOVT
		LBY			NM		WR	LC
DATE	8/12/66	9/16/66			8-12-66		8-12-66	8-12-66

PRIORITY	DRAWING TITLE	DRAWING	EO
C	STANDOFF INSTL- DESCENT STAGE- AFT THERMAL	LDW280-51658	A2

ISSUED BY L.M. GRIECO / J. STRAKOSCH 8-12-66 SECTION V. D. I. GROUP NO. 335 PL 35

LDW280P17524-1 PATCH (REF)
TAPE BOTH INSIDE & OUTSIDE
AS SHOWN USING GT835P-8
TAPE (1½" STRIPS) (ON-11)
INSIDE & LDW280P17590-11
TAPE (1½" STRIPS) (ON-11) OUTSIDE
¼ TYP
3/4
3/4
1/16
GT835 TAPE (REF)
LDW360-51297-13 (REF)
℄ REF
GT835P-8 (REF)
(ADD)
DETAIL Ω
THERMOCOUPLE WIRE (REF)
α
α
GT835P-8 TAPE REF
LPC280-2 (REF)
-13 REF
-17 REF
.624-.633 DIA HOLE (REF)
(ADD)
SECTION α-α
(ADD)
SECTION λ-λ
-15 (REF)
(ADD)
2¼ ± ¼
-17 REF
-13 (REF)
GT835P-8 TAPE (REF)
(ADD)
SECTION *-*
(ADD)
-13 REF
(REMOVE)
LDW280P17462-23 (REF)
(ADD) -17 REF
(ADD) GB10J-1 (REF)
(ADD) GW10H-1 (REF)
REVISE PICTURE OF BLANKET OMITTING SPLICE
SECTION B-B (REF)
REVISIONS SHOWN TYP FOR SECT. J-J
(CORRECT CALLOUT)
-Z 60.695 WAS -Y 60.695
X116.340 (REF)
(CORRECT CALLOUT)
GT535L-HA-0250 (ON-11)
SEE NOTE 3
WAS LDW280P17936-29 (ON-3)
SEE NOTE 3
(ADD)
-17 REF, LDW280P17462-43 REF
(ADD)
-15 (REF), LDW280P17462-37 (REF)
(ADD)
-13 (REF), LDW280P17462-29 (REF)
(REMOVE)
LDW280P17462-23 (REF)
GW10H-1 (REF)
GB10J-1 (REF)
ADD 3 PLACES
(ADD)
PATCH PER LPC280-6 (REF)
X131.140 (REF)
(ADD)
PROTRUSION SHIELD
PER LPC 280-7 (REF)
SECTION A-A (REF)
REVISE AS SHOWN
(CORRECT CALLOUT)
-Z 81.00 (REF) WAS -Y 81.00 (REF)
SECTION C-C (REF)
D-D (OPP) (ZONE 28A)
REMOVE
CORRECT CALLOUT TO
READ GT535G-LAS-0004
REMOVE SECT D-D
(REMOVE)
LDW280-23712-3 (1)
MS20470 A3 (2)
D
D
C
C
E
E (REF)
(SEE NOTE ψ) 3/8 DIA 9 HOLES IN -13, -15, & -17
WAS 3/8 DIA 9 HOLES (ON-5)
ADD { GW10H-1 (11) (ON-11)
GB10J-1 (11) (ON-11)
3.00 (REF)
A
(CORRECT CALLOUT)
GT535L-HA-0250 (ON-11)
SEE NOTE 3
WAS LDW280-17936-29 (ON-3)
SEE NOTE 3
LDW280-23712-3
(ON-7) (REF)
*
B
B (REF)
D
C
C
D
C (REF)
C (REF)
(REMOVE)
LDW280-23712-3 (1)
MS20470A3 (2)
REMOVE SECT D-D
(CORRECT CALLOUT
LDW280-23712
MS20470A3 (4)
VIEW LOOKING UP
SHT 6 (REF)
(REMOVE)
MS20470 A3 (2)
LDW280-23712-1 (1)
LDW280P17575-11 (1)
AN515-6R4 (1)
¼ DIA 1 HOLE
+X 131.14 (REF)
TURN FLAP BACK & TAPE USING
2 INCH STRIPS OF GT835M-8 TAPE
+X 196.00 (REF)
-Y 27.
-Y 15.
5/32 DIA HOLE REF.
WAS ¼ DIA HOLE
RELOCATE TO 3.875 DIM
AS SHOWN
3.875 (REF)
.36 REF
-Y 5.37
2.875 (REF)
λ
(ADD)
2.50
1.25
1.25
2.50
TAPE THERMOCOUPLE TO UNDERSIDE OF -17
WITH GT835P-8 TAPE (ON-11)
℄
(ADD)
LDW360-51297-13 (ON-11)
(ADD)
LDW280P17462-29 (REF)
+Y 5.37
G
G (REF)
(REMOVE)
LDW280P17462-23 REF (ON-5)
(ADD)
LDW280P17462-43 (REF)
(ADD) LDW280P17700-17 (24) (ON-11)
(REMOVE) LDW280P17700-7 (24)
LDW280P17523-3 (24) (ON-11)
WAS (24) (ON-5)
LDW280P17936-13 (24) (ON-7) WAS (24) (ON-1)
5/32 DIA 24 HOLES (IN -13 & -17) (SEE NOTE ψ)
WAS ¼ DIA 24 HOLES (ON-5)
20.50
TACK TAPE THERMOCOUPLE WIRE TO UNDERSIDE
OF -17 AT 4" TO 6" PITCH USING 2" STRIPS
OF GT835P-8 TAPE (ON-11)
J
J (REF)
λ
+Y 27.
10.00
(REMOVE)
MS20470A3 (2)
LDW280-23712-1 (1)
LDW280P17575-11 (1)
AN515-6R4 (1)
¼ DIA 1 HOLE
LDW280P17524-1 (4) (ON-11)
SEE DETAIL Ω
(SEE NOTE ψ)
MS20470A3 (12) (ON-7) WAS (20) (ON-1)
LDW280-23712-4 (6) ON-7) WAS 10 (ON-1)
LDW280P17575-11 (6) (ON-5) WAS 10 (ON-3)
AN515-6R4 (6) (ON-3) WAS 10 (ON-3)
(ADD) 3/8 DIA 6 HOLES (IN -13 & -17) WAS ¼ DIA 10 HOLES (ON-5)
(ADD) GW10H-1 (6) (ON-11)
(ADD) GB10J-1 (6) (ON-11)
(ADD)
.624-.633 DIA HOLE IN -13 ONLY
PATCH PER LPC280-2 (ON-11)
REMOVE
VIEW LOOKING AFT

01/03 NAS 9-1100

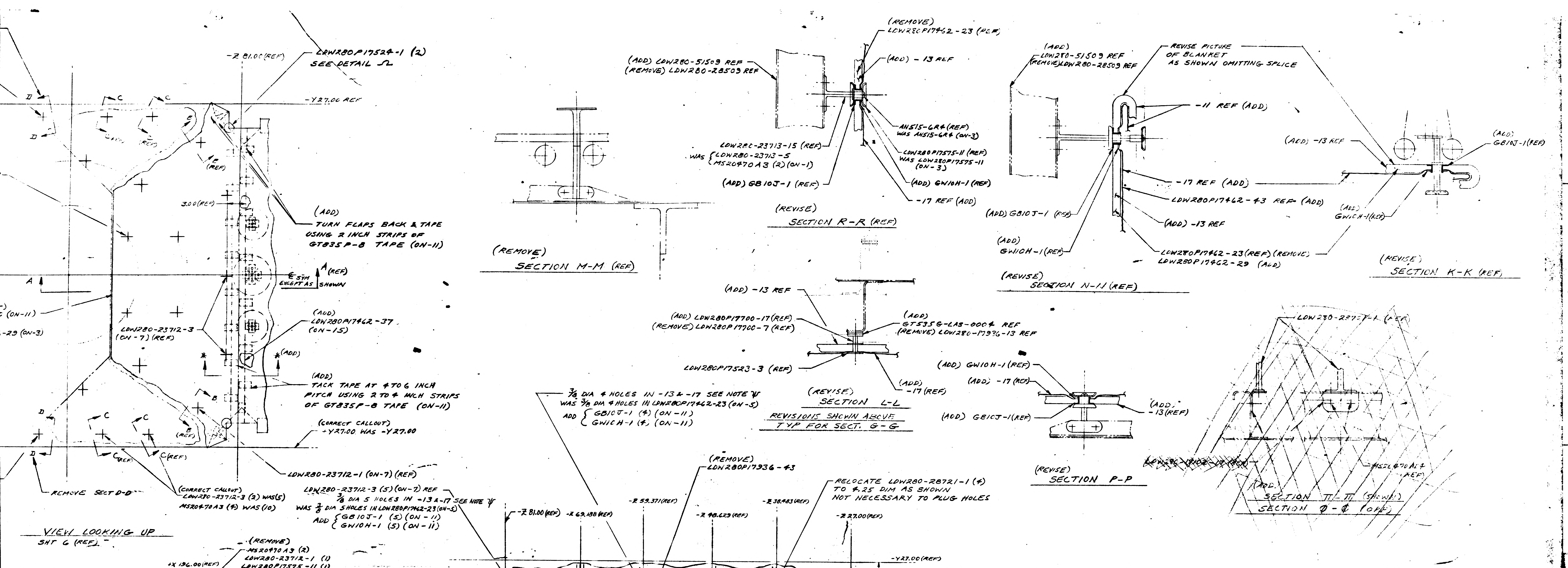
-Z 81.00(REF)
LDW280P17524-1 (2) SEE DETAIL Ω
-Y27.00 REF
D
C
C
E
E (REF)
3.00(REF)
(ADD) TURN FLAPS BACK & TAPE USING 2 INCH STRIPS OF GT835P-8 TAPE (ON-11)
A
A (REF)
℄ SYM EXCEPT AS SHOWN
(ON-11)
-29 (ON-3)
LDW280-23712-3 (ON-7) (REF)
(ADD) LDW280P17462-37 (ON-15)
* (ADD)
(ADD) TACK TAPE AT 4 TO 6 INCH PITCH USING 2 TO 4 INCH STRIPS OF GT835P-8 TAPE (ON-11)
B
B (REF)
(CORRECT CALLOUT) +Y27.00 WAS -Y27.00
D
C (REF)
C (REF)
LDW280-23712-1 (ON-7) (REF)
REMOVE SECT D-D
(CORRECT CALLOUT) LDW280-23712-3 (2) WAS (5) MS20470A3 (4) WAS (10)
LDW280-23712-3 (5) (ON-7) REF 3/8 DIA 5 HOLES IN -13 & -17 SEE NOTE ψ WAS 3/8 DIA 5 HOLES IN LDW280P17462-23 (ON-5) ADD GB10J-1 (5) (ON-11) GW10H-1 (5) (ON-11)
VIEW LOOKING UP SHT 6 (REF)
(REMOVE)
SECTION M-M (REF)
(ADD) LDW280-51509 REF
(REMOVE) LDW280-28509 REF
(REMOVE) LDW280P17462-23 (REF)
(ADD) -13 REF
AN515-6R4 (REF) WAS AN515-6R4 (ON-3)
LDW280-23713-15 (REF) WAS LDW280-23713-5 MS20470A3 (2) (ON-1)
LDW280P17575-11 (REF) WAS LDW280P17575-11 (ON-3)
(ADD) GB10J-1 (REF)
(ADD) GW10H-1 (REF)
-17 REF (ADD)
(REVISE)
SECTION R-R (REF)
(ADD) -13 REF
(ADD) LDW280P17700-17 (REF)
(REMOVE) LDW280P17700-7 (REF)
(ADD) GT535G-LAS-0004 REF
(REMOVE) LDW280-17936-13 REF
LDW280P17523-3 (REF)
(ADD) -17 (REF)
(REVISE)
SECTION L-L
REVISIONS SHOWN ABOVE TYP FOR SECT. G-G
3/8 DIA 4 HOLES IN -13 & -17 SEE NOTE ψ WAS 3/8 DIA 4 HOLES IN LDW280P17462-23 (ON-5) ADD GB10J-1 (4) (ON-11) GW10H-1 (4) (ON-11)
(REMOVE) LDW280P17936-43
RELOCATE LDW280-28721-1 (4) TO 4.25 DIM AS SHOWN NOT NECESSARY TO PLUG HOLES
(ADD) LDW280-51509 REF
(REMOVE) LDW280-28509 REF
REVISE PICTURE OF BLANKET AS SHOWN OMITTING SPLICE
-11 REF (ADD)
-17 REF (ADD)
LDW280P17462-43 REF (ADD)
(ADD) GB10J-1 (REF)
(ADD) -13 REF
(ADD) GW10H-1 (REF)
LDW280P17462-23 (REF) (REMOVE)
LDW280P17462-29 (ADD)
(REVISE)
SECTION N-N (REF)
(ADD) -13 REF
(ADD) GB10J-1 (REF)
(ADD) GW10H-1 (REF)
(REVISE)
SECTION K-K (REF)
(ADD) GW10H-1 (REF)
(ADD) -17 (REF)
(ADD) -13 (REF)
(ADD) GB10J-1 (REF)
(REVISE)
SECTION P-P
LDW280-23712-1 (REF)
MS20470A3 (REF)
SECTION Π-Π (SHOWN)
SECTION Φ-Φ (OPP)

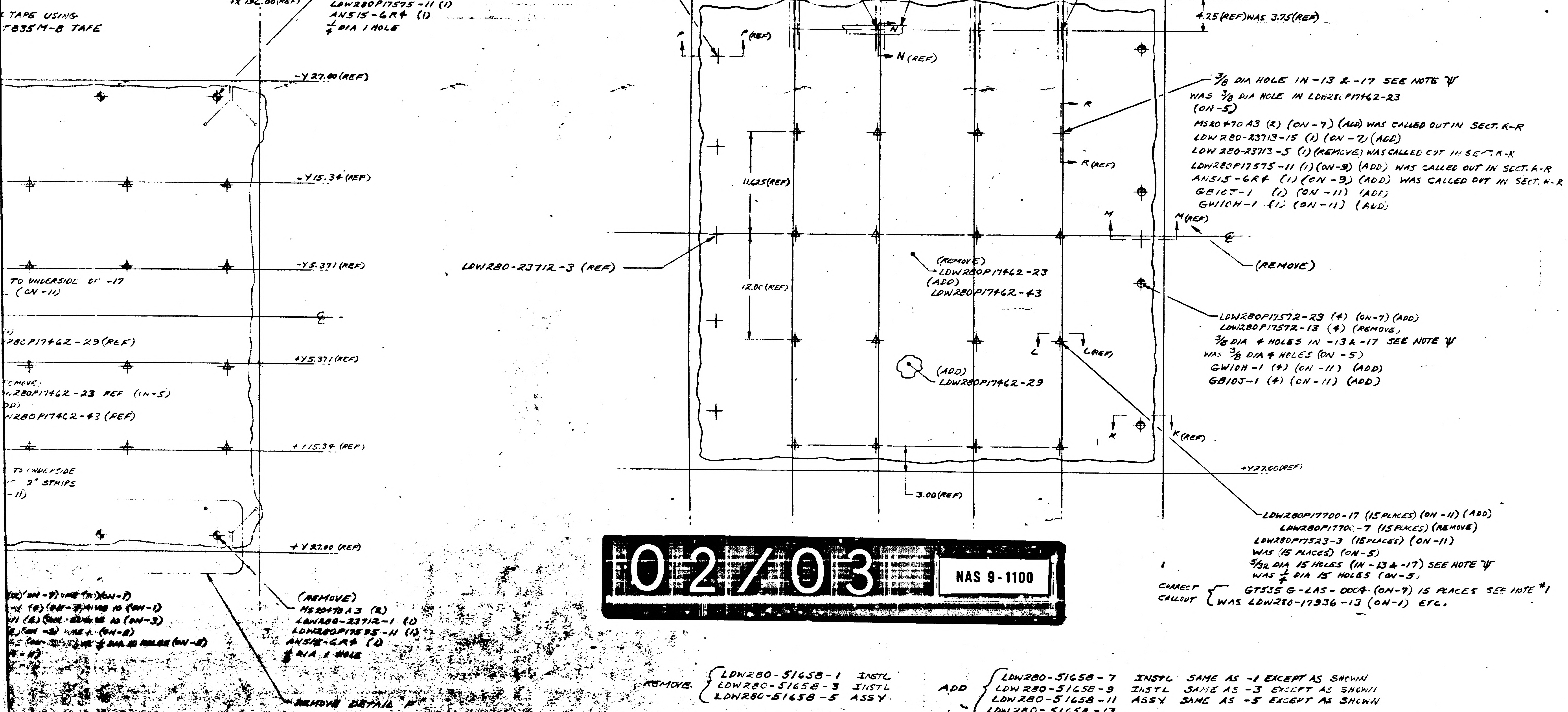
(REMOVE) MS20470A3 (2) LDW280-23712-1 (1) LDW280P17575-11 (1) AN515-6R4 (1) 1/4 DIA 1 HOLE
+X 196.00 (REF)
TAPE USING GT835M-8 TAPE
-Y27.00 (REF)
-Y15.34 (REF)
-Y5.371 (REF)
TO UNDERSIDE OF -17 (ON-11)
℄
LDW280P17462-29 (REF)
+Y5.371 (REF)
(REMOVE) LDW280P17462-23 REF (ON-5)
(ADD) LDW280P17462-43 (REF)
+Y15.34 (REF)
TO UNDERSIDE 2" STRIPS (ON-11)
+Y27.00 (REF)
(REMOVE) MS20470A3 (2) LDW280-23712-1 (1) LDW280P17575-11 (1) AN515-6R4 (1) 1/4 DIA 1 HOLE
REMOVE DETAIL "F"
LDW280-23712-3 (REF)
-Z 81.00 (REF)
-Z 69.188 (REF)
-Z 59.371 (REF)
-Z 48.629 (REF)
-Z 38.483 (REF)
-Z 27.00 (REF)
-Y27.00 (REF)
4.25 (REF) WAS 3.75 (REF)
P
P (REF)
N
N (REF)
R
R (REF)
M
M (REF)
℄
(REMOVE)
11.625 (REF)
12.00 (REF)
(REMOVE) LDW280P17462-23 (ADD) LDW280P17462-43
(ADD) LDW280P17462-29
L
L (REF)
K
K (REF)
+Y27.00 (REF)
3.00 (REF)
3/8 DIA HOLE IN -13 & -17 SEE NOTE ψ WAS 3/8 DIA HOLE IN LDW280P17462-23 (ON-5)
MS20470A3 (2) (ON-7) (ADD) WAS CALLED OUT IN SECT. K-R
LDW280-23713-15 (1) (ON-7) (ADD)
LDW280-23713-5 (1) (REMOVE) WAS CALLED OUT IN SECT. R-R
LDW280P17575-11 (1) (ON-9) (ADD) WAS CALLED OUT IN SECT. K-R
AN515-6R4 (1) (ON-9) (ADD) WAS CALLED OUT IN SECT. R-R
GB10J-1 (1) (ON-11) (ADD)
GW10H-1 (1) (ON-11) (ADD)
LDW280P17572-23 (4) (ON-7) (ADD)
LDW280P17572-13 (4) (REMOVE)
3/8 DIA 4 HOLES IN -13 & -17 SEE NOTE ψ WAS 3/8 DIA 4 HOLES (ON-5)
GW10H-1 (4) (ON-11) (ADD)
GB10J-1 (4) (ON-11) (ADD)
LDW280P17700-17 (15 PLACES) (ON-11) (ADD)
LDW280P17700-7 (15 PLACES) (REMOVE)
LDW280P17523-3 (15 PLACES) (ON-11) WAS (15 PLACES) (ON-5)
5/32 DIA 15 HOLES (IN -13 & -17) SEE NOTE ψ WAS 1/4 DIA 15 HOLES (ON-5)
CORRECT CALLOUT GT535G-LAS-0004 (ON-7) 15 PLACES SEE NOTE #1 WAS LDW280-17936-13 (ON-1) ETC.

02/03

NAS 9-1100

REMOVE LDW280-51658-1 INSTL
LDW280-51658-3 INSTL
LDW280-51658-5 ASSY

ADD LDW280-51658-7 INSTL SAME AS -1 EXCEPT AS SHOWN
LDW280-51658-9 INSTL SAME AS -3 EXCEPT AS SHOWN
LDW280-51658-11 ASSY SAME AS -5 EXCEPT AS SHOWN
LDW280-51658-13
LDW280-51658-15
LDW280-51658-17

VIEW LOOKING DOWN SHT 3 & 4 (REF)

1.) CREATE -7, -9, -11, -13, -15, & -17 I&T EXEMPT
2.) IN B/M ADD GS577A-1 STAPLE, GT835P-8, GT835M-8, GT535B-2-1.00, & LDW280P17590-11 TAPE (AS REQD) (ON-11)
3.) IN F/D & B/M REMOVE LDW280P17936-43 & -47 TAPE
4.) IN F/D REMOVE DETAIL "F" & SECTION H-H
5.) IN F/D & B/M REPLACE -1, -3, & -5 WITH -7, -9, & -11 RESPECTIVELY UNLESS OTHERWISE SHOWN
6.) IN F/D & B/M REMOVE LDW280P17462-23 & ADD LDW280P17462-29, -37 & -43
7.) IN F/D & B/M CORRECT CALLOUT FOR VELCRO TAPE GT535G-LAS-0004 REPLACES LDW280P17936-13 & GT535L-HA-0250 REPLACES LDW280P17936-29 (NOTE: INSTALLED PARTS ARE NOT TO BE REMOVED.)
8.) BREAK BLANKET PICTURE AT EDGES OMITTING PICTURE OF SPLICE. DETAILS OF SPLICE TO BE SHOWN ON MATING BLANKET
9.) REMOVE ALL LDW280-28509 REF CALLOUTS & REPLACE WITH LDW280-51509 REF
10.) REVISE NOTE #2 TO READ: FASTEN LDW280P17523-3 TO LDW280P17700-17 PER LPC280-14
11.) REVISE NOTE #3 TO READ: SEW GT535-HA-0250 TO -11 AT 3/16 ± 1/16 FROM EDGES OF GT535L-HA-0250 IN ACCORDANCE WITH FED STD #751a & STITCH TYPE 301
12.) REMOVE NOTE #4
13.) ADD NOTE δ FABRICATE -11 BLANKET ASSY PER LPC280-1
14.) ADD NOTE ψ ALL ALUMINIZED MYLAR PARTS SHALL HAVE HOLE PATTERNS LOCATED WITH EXPANDED DIMS. THE EXPANSION RATIO IS TO BE .050 IN/IN (e.g. 10.000 SHOWN EXPANDS TO 10.500)
ALL ALUMINIZED POLYIMIDE PARTS SHALL HAVE HOLE PATTERNS LOCATED WITH EXPANDED DIMS THE EXPANSION RATIO TO BE .070 IN/IN (e.g. 10.000 SHOWN EXPANDS TO 10.700)
15.) ADD NOTE θ":
LDW280P17700-17 IS INTERCHANGEABLE WITH GS26D-1

δ, ψ, θ —— USE NEXT AVAILABLE NOTE NO.

α-α, λ-λ, *-*, [illegible] Ω —— USE NEXT AVAILABLE SECTION LETTER

✦, ⊕, ⊕ —— THESE SYMBOLS ARE FOR IDENTIFICATION OF STANDOFF TYPE ON E.O. ONLY DO NOT ADD TO DWG

-17 -15
QTY

DETAIL SPEC REQD
ADDITIONA
SHIELDII
MODEL
PROCURI
LM LM-1
ISSUED BY J.BURCWE

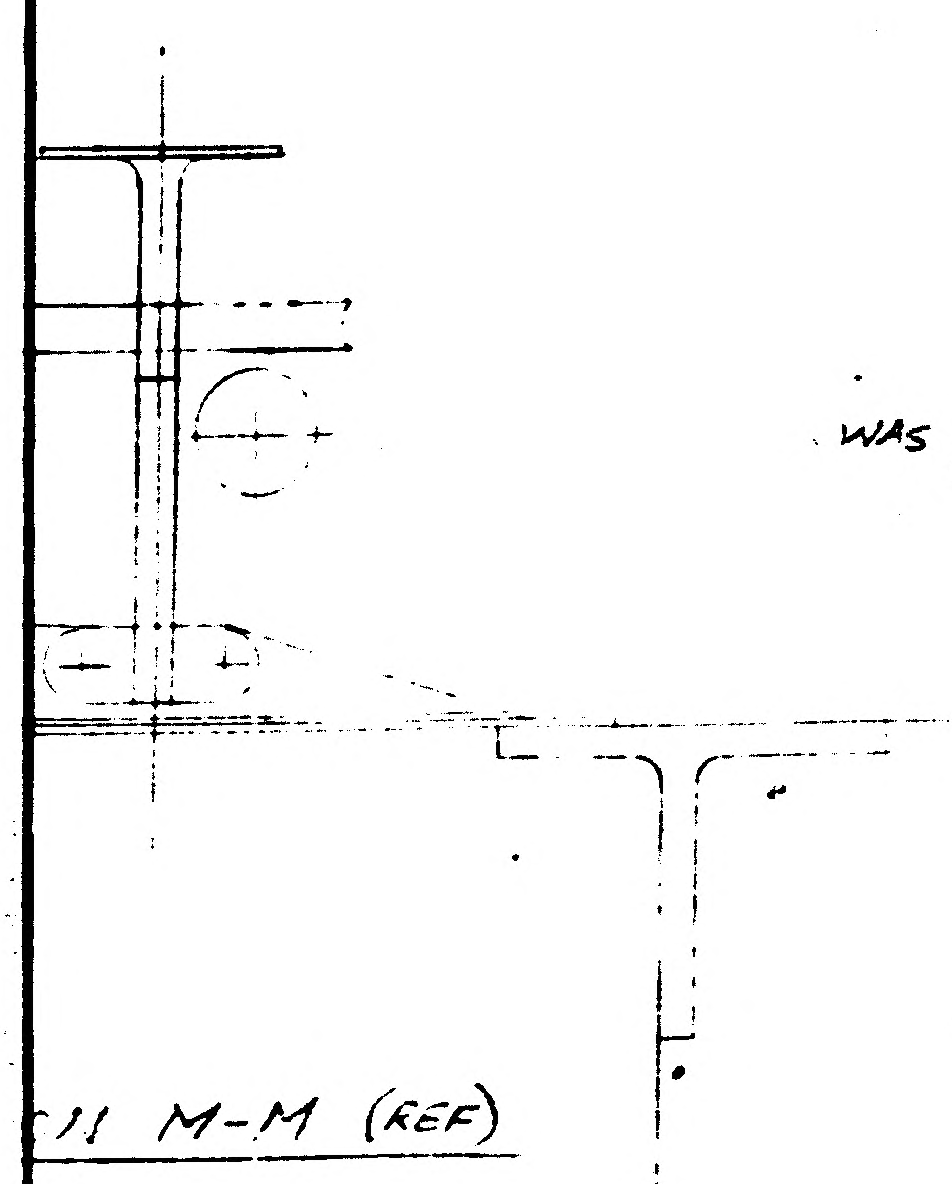

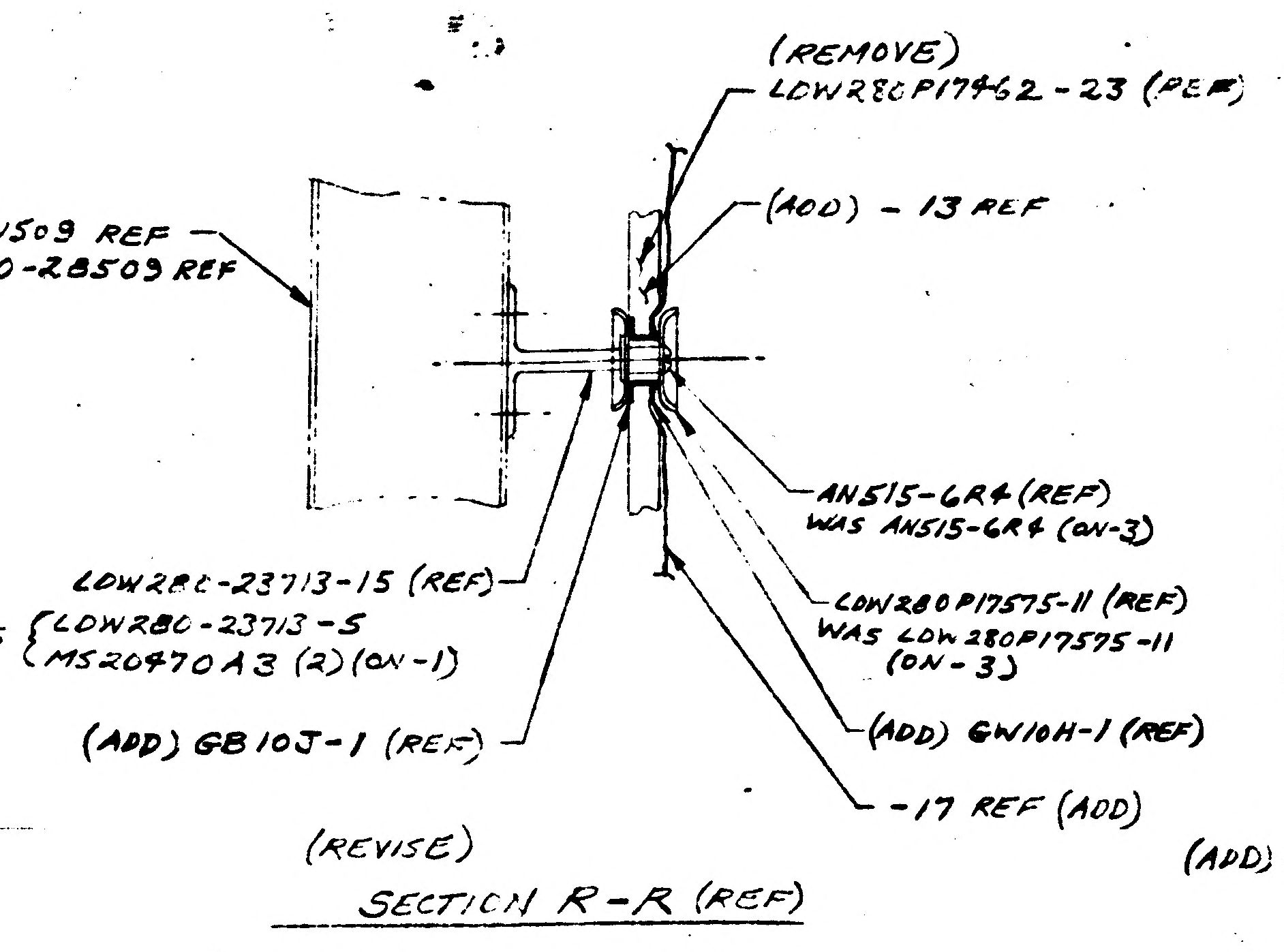

(REMOVE)
LDW280P17462-23 (REF)
(ADD) LDW280-51509 REF
(REMOVE) LDW280-28509 REF
(ADD) -13 REF
AN515-6R4 (REF)
WAS AN515-6R4 (ON-3)
LDW280-23713-15 (REF)
WAS { LDW280-23713-5
MS20470A3 (2) (ON-1)
LDW280P17575-11 (REF)
WAS LDW280P17575-11 (ON-3)
(ADD) GW10H-1 (REF)
(ADD) GB10J-1 (REF)
-17 REF (ADD)

(REVISE)
SECTION R-R (REF)

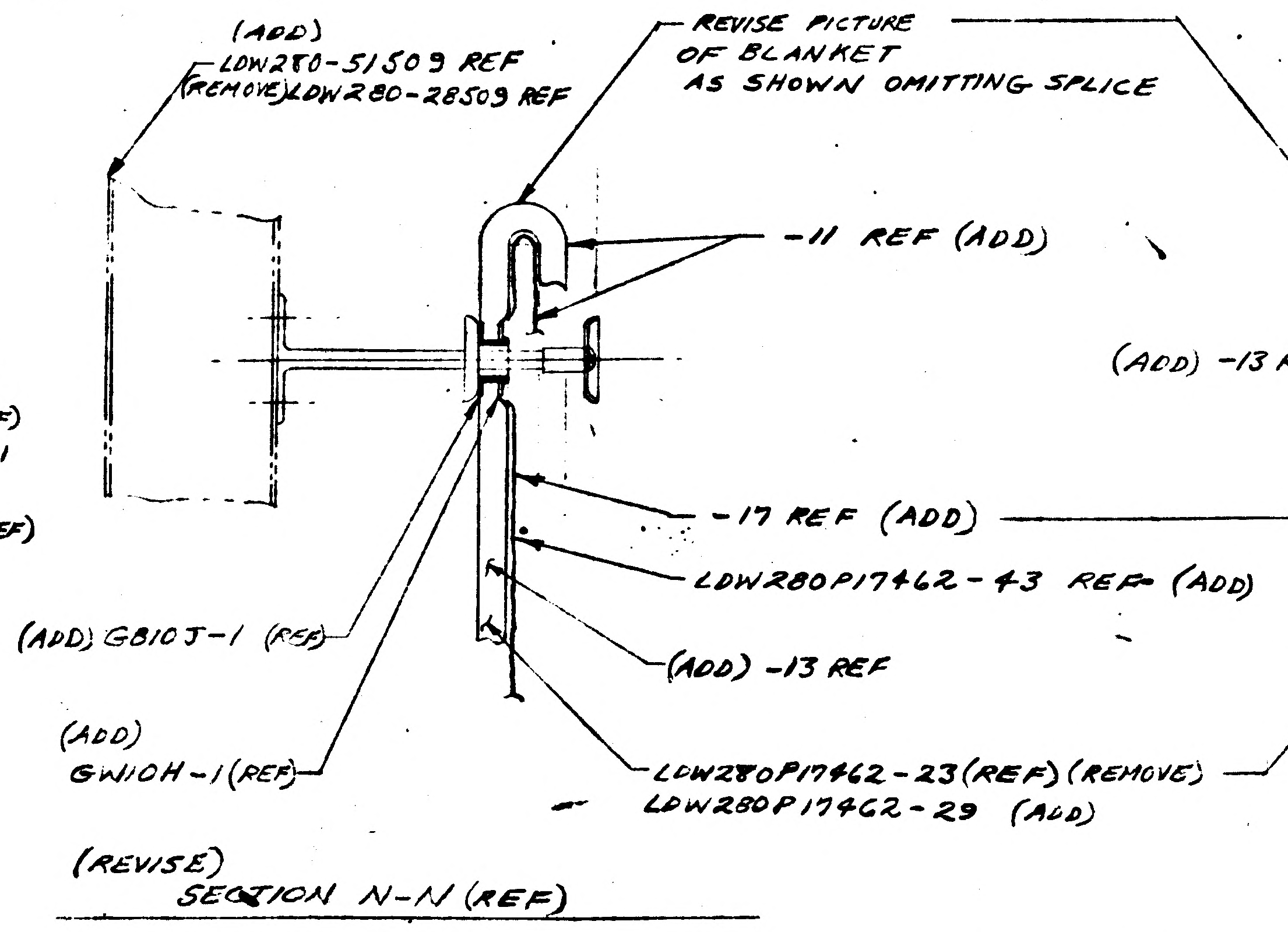

(ADD)
LDW280-51509 REF
(REMOVE) LDW280-28509 REF
REVISE PICTURE OF BLANKET AS SHOWN OMITTING SPLICE
-11 REF (ADD)
-17 REF (ADD)
LDW280P17462-43 REF (ADD)
(ADD) -13 REF
(ADD) GB10J-1 (REF)
(ADD) GW10H-1 (REF)
LDW280P17462-23 (REF) (REMOVE)
LDW280P17462-29 (ADD)

(REVISE)
SECTION N-N (REF)

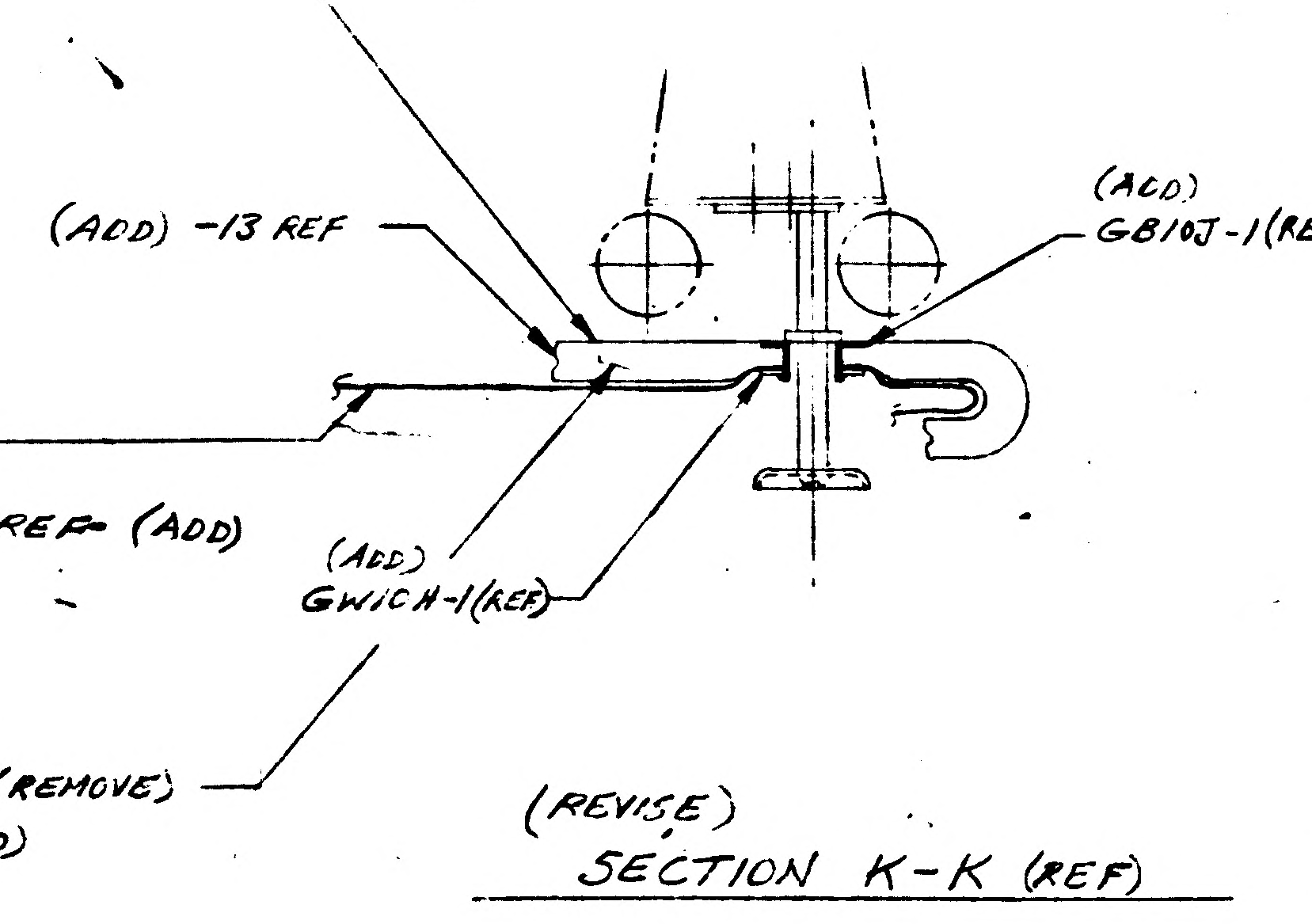

(ADD) -13 REF
(ADD)
GB10J-1 (REF)
(ADD)
GWICH-1 (REF)

(REVISE)
SECTION K-K (REF)

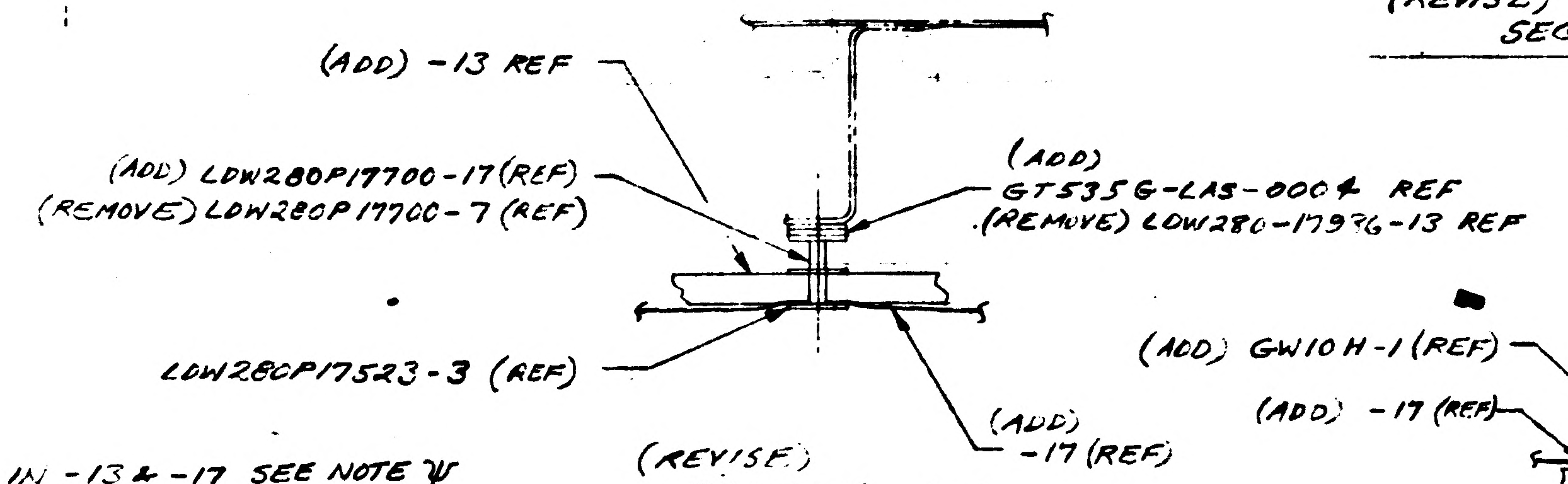

(ADD) -13 REF
(ADD) LDW280P17700-17 (REF)
(REMOVE) LDW280P17700-7 (REF)
(ADD)
GT535G-LAS-0004 REF
(REMOVE) LDW280-17936-13 REF
LDW280P17523-3 (REF)
(ADD)
-17 (REF)

(REVISE)
SECTION L-L

REVISIONS SHOWN ABOVE
TYP FOR SECT. G-G

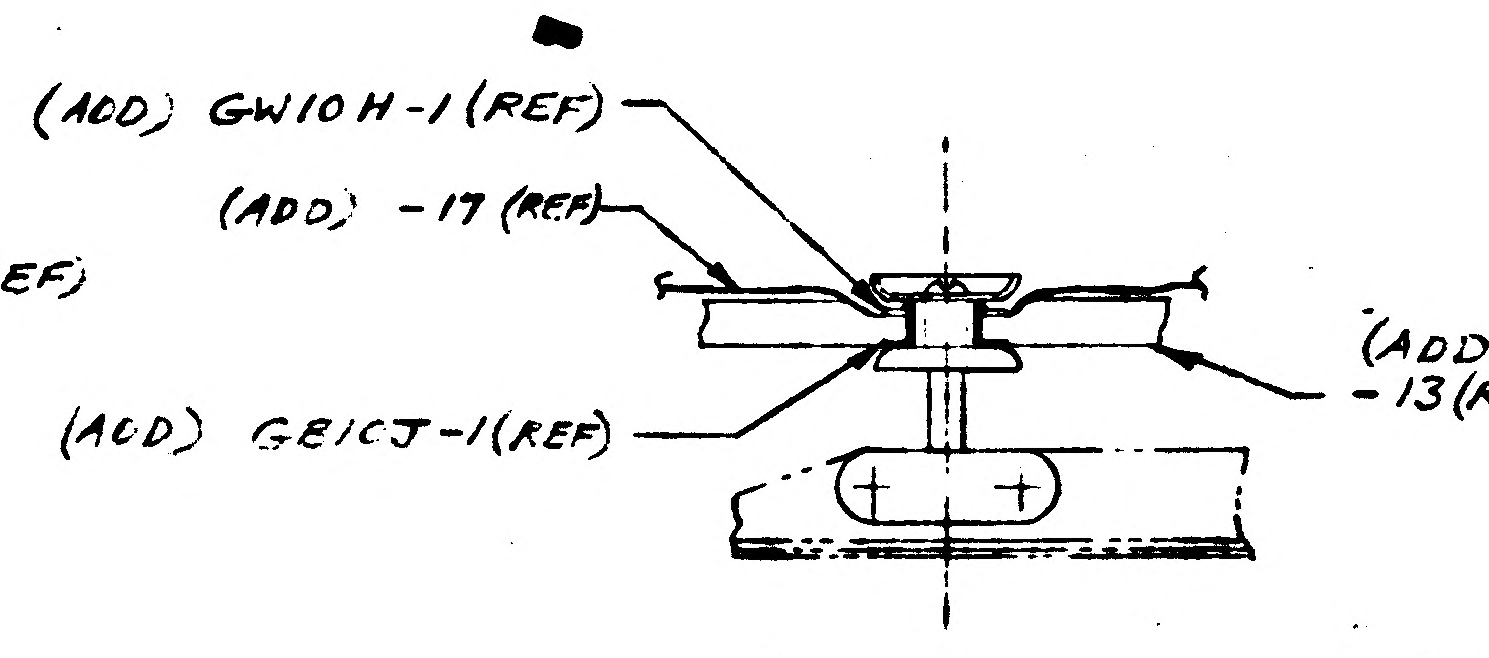

(ADD) GW10H-1 (REF)
(ADD) -17 (REF)
(ADD) GBICJ-1 (REF)
(ADD)
-13 (REF)

(REVISE)
SECTION P-P

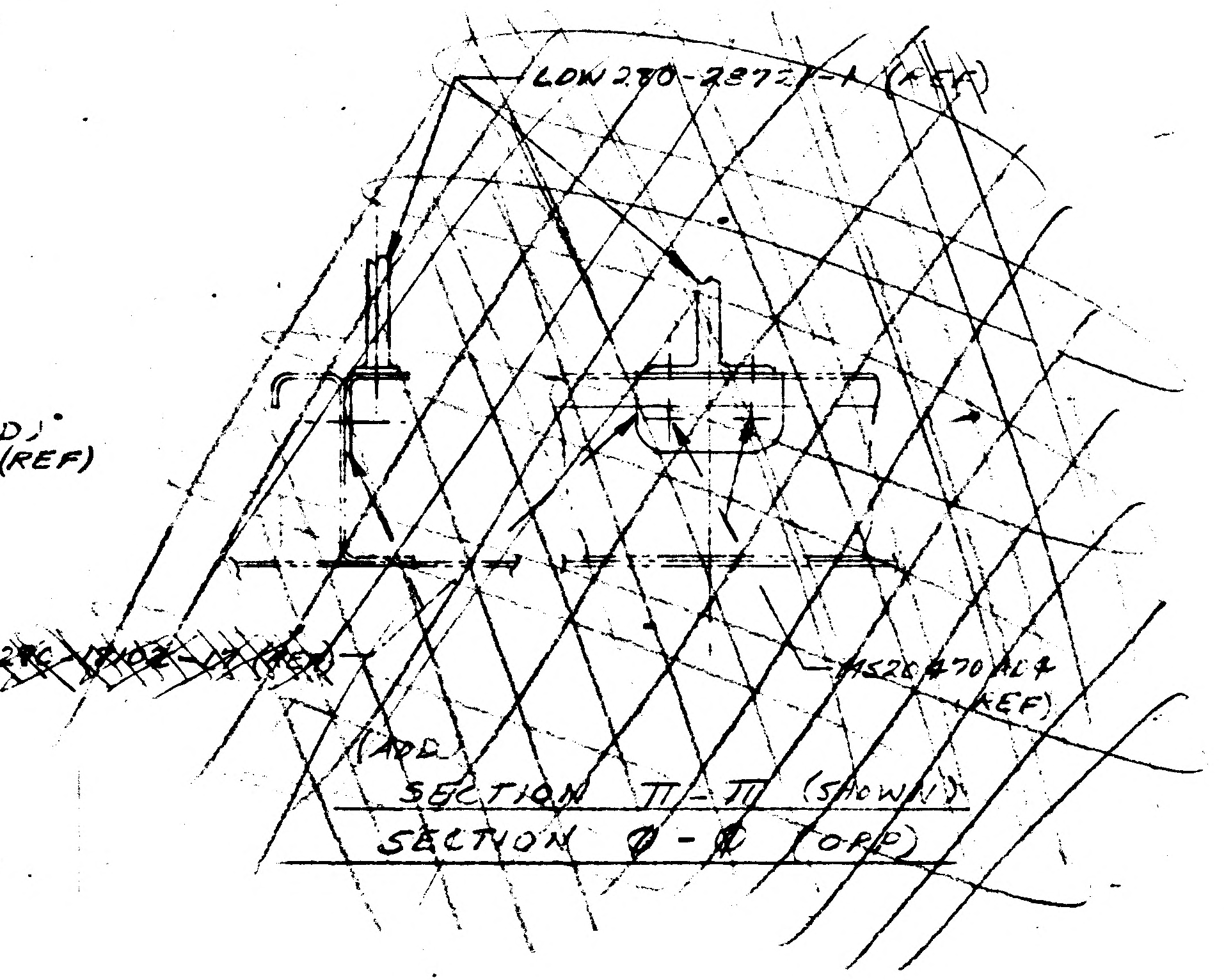

LDW280-28721-1 (REF)
MS20470AD4 (REF)
(ADD)

~~SECTION Π-Π (SHOWN)~~
~~SECTION Φ-Φ (OPP)~~

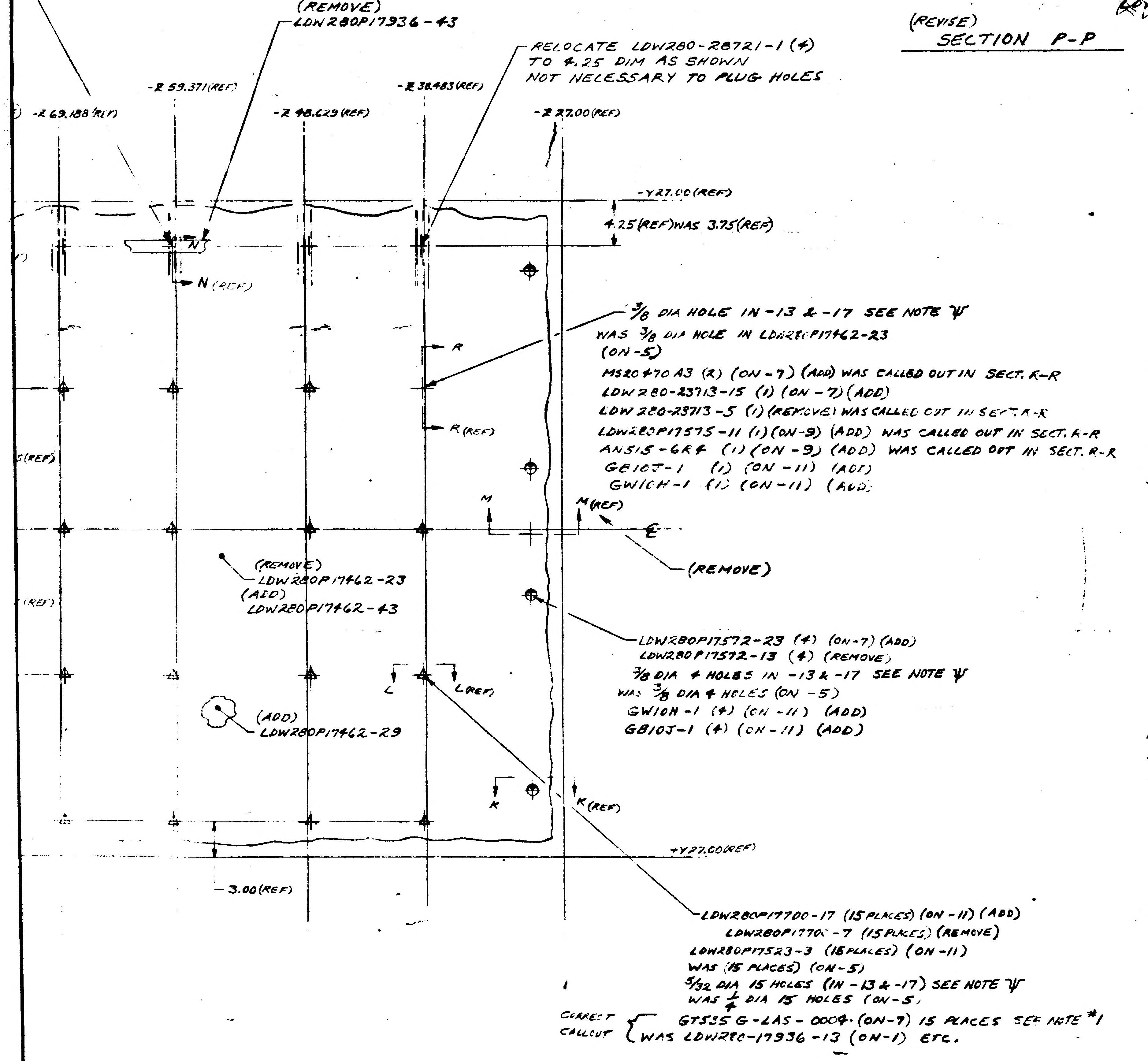

3/8 DIA 4 HOLES IN -13 & -17 SEE NOTE Ψ
WAS 3/8 DIA 4 HOLES IN LDW280P17462-23 (ON-5)
ADD { GBICJ-1 (4) (ON-11)
GWICH-1 (4) (ON-11)
(REMOVE)
LDW280P17936-43
RELOCATE LDW280-28721-1 (4)
TO 4.25 DIM AS SHOWN
NOT NECESSARY TO PLUG HOLES
-Z 69.188 (REF)
-Z 59.371 (REF)
-Z 48.629 (REF)
-Z 38.483 (REF)
-Z 27.00 (REF)
-Y27.00 (REF)
4.25 (REF) WAS 3.75 (REF)
N
N (REF)
3/8 DIA HOLE IN -13 & -17 SEE NOTE Ψ
WAS 3/8 DIA HOLE IN LDW280P17462-23
(ON-5)
MS20470A3 (2) (ON-7) (ADD) WAS CALLED OUT IN SECT. K-R
LDW280-23713-15 (1) (ON-7) (ADD)
LDW280-23713-5 (1) (REMOVE) WAS CALLED OUT IN SECT. K-R
LDW280P17575-11 (1) (ON-9) (ADD) WAS CALLED OUT IN SECT. K-R
AN515-6R4 (1) (ON-9) (ADD) WAS CALLED OUT IN SECT. R-R
GBICJ-1 (1) (ON-11) (ADD)
GWICH-1 (1) (ON-11) (ADD)
R
R (REF)
M
M (REF)
℄
(REMOVE)
(REMOVE)
LDW280P17462-23
(ADD)
LDW280P17462-43
LDW280P17572-23 (4) (ON-7) (ADD)
LDW280P17572-13 (4) (REMOVE)
3/8 DIA 4 HOLES IN -13 & -17 SEE NOTE Ψ
WAS 3/8 DIA 4 HOLES (ON-5)
GW10H-1 (4) (ON-11) (ADD)
GB10J-1 (4) (ON-11) (ADD)
L
L (REF)
(ADD)
LDW280P17462-29
K
K (REF)
+Y27.00 (REF)
-3.00 (REF)
LDW280P17700-17 (15 PLACES) (ON-11) (ADD)
LDW280P17700-7 (15 PLACES) (REMOVE)
LDW280P17523-3 (15 PLACES) (ON-11)
WAS (15 PLACES) (ON-5)
5/32 DIA 15 HOLES (IN -13 & -17) SEE NOTE Ψ
WAS 1/4 DIA 15 HOLES (ON-5)
CORRECT CALLOUT { GT535G-LAS-0004 (ON-7) 15 PLACES SEE NOTE #1
WAS LDW280-17936-13 (ON-1) ETC.

0-51658-1 INSTL
-51658-3 INSTL
-51658-5 ASSY

ADD { LDW280-51658-7 INSTL SAME AS -1 EXCEPT AS SHOWN
LDW280-51658-9 INSTL SAME AS -3 EXCEPT AS SHOWN
LDW280-51658-11 ASSY SAME AS -5 EXCEPT AS SHOWN
LDW280-51658-13
LDW280-51658-15
LDW280-51658-17

VIEW LOOKING DOWN SHT 3 & 4 (REF)

-17	-15	-13	-11	-9	-7	CODE IDENT	PART NO	I&T	NOMENCLATURE OR DESCRIPTION	MATERIAL	GOVT SPEC	COML SPEC	STOCK SIZE	PROCESS SYM	FINISH NO.	ZONE
			AS REQD				LDW280P17590-11		TAPE							
			AS REQD				GT535B-2-1.00		TAPE							
			AS REQD				GT835M-8		TAPE							
			AS REQD				GT835P-8		TAPE							
			AS REQD				GS577A-1		STAPLE							
				31			GW10H-1		WASHER							
				31			GB10J-1		BUSHING							
			2				GT535L-HA-0250		TAPE							
					39		GT535G-LAS-0004		TAPE							
					[illegible]		[illegible]		[illegible]							
					58		MS20470A3		RIVET							
				31			AN515-6R4		SCREW							
			6				LDW280P17524-1		PATCH							
				31			LDW280P17575-11		RETAINER							
			39				LDW280P17523-3		CAP							
			39				LDW280P17700-17		STANDOFF ASSY (SEE NOTE θ)							
			1				LDW360-51297-13		THERMOCOUPLE							
					4		LDW280P17572-23		STANDOFF							
					1		LDW280-23713-15		STANDOFF ASSY							
					12		LDW280-23712-3									
					8		LDW280-23712-1									
					4		LDW280-28721-1		STANDOFF ASSY							
					[illegible]		[illegible]		[illegible]							
1							LDW280P17462-43		SKIN							
	1						LDW280P17462-37		BLANKET ASSY							
		1					LDW280P17462-29		BLANKET ASSY							
			1				LDW280-51658-17		BLANKET ASSY							
			1				-15									
			1				-13									
				1			-11		BLANKET ASSY							
							-9		BLANKET INSTL							
							LDW280-51658-7		STANDOFF INSTL							

QTY PER ASSEMBLY

REVISE B/M AS SHOWN ABOVE TO AGREE WITH CHANGES SHOWN IN FIELD OF E.O.

1.) CREATE -7, -9, -11, -13, -15, & -17 I&T EXEMPT
2.) IN B/M ADD GS577A-1 STAPLE, GT835P-8, GT835M-8, GT535B-2-1.00, & LDW280P17590-11 TAPE (AS REQD) (ON-11)
3.) IN F/D & B/M REMOVE LDW280P17936-43 & -47 TAPE
4.) IN F/D REMOVE DETAIL "F" & SECTION H-H
5.) IN F/D & B/M REPLACE -1, -3, & -5 WITH -7, -9, & -11 RESPECTIVELY UNLESS OTHERWISE SHOWN
6.) IN F/D & B/M REMOVE LDW280P17462-23 & ADD LDW280P17462-29, -37 & -43
7.) IN F/D & B/M CORRECT CALLOUT FOR VELCRO TAPE GT535G-LAS-0004 REPLACES LDW280P17936-13 & GT535L-HA-0250 REPLACES LDW280P17936-29 (NOTE: INSTALLED PARTS ARE NOT TO BE REMOVED.)

8.) BREAK BLANKET PICTURE AT EDGES OMITTING PICTURE OF SPLICE. DETAILS OF SPLICE TO BE SHOWN ON MATING BLANKET

9.) REMOVE ALL LDW280-28509 REF CALLOUTS & REPLACE WITH LDW280-51509 REF

10.) REVISE NOTE #2 TO READ: FASTEN LDW280P17523-3 TO LDW280P17700-17 PER LPC280-14
11.) REVISE NOTE #3 TO READ: SEW GT535-HA-0250 TO -11 AT 3/16 ± 1/16 FROM EDGES OF GT535L-HA-0250 IN ACCORDANCE WITH FED STD #751a & STITCH TYPE 301
12.) REMOVE NOTE # 4
13.) ADD NOTE δ FABRICATE -11 BLANKET ASSY PER LPC280-1
14.) ADD NOTE Ψ ALL ALUMINIZED MYLAR PARTS SHALL HAVE HOLE PATTERNS LOCATED WITH EXPANDED DIMS. THE EXPANSION RATIO IS TO BE .050 IN/IN (e.g. 10.000 SHOWN EXPANDS TO 10.500)
ALL ALUMINIZED POLYIMIDE PARTS SHALL HAVE HOLE PATTERNS LOCATED WITH EXPANDED DIMS THE EXPANSION RATIO TO BE .070 IN/IN (e.g. 10.000 SHOWN EXPANDS TO 10.700)
15.) ADD NOTE "θ":
LDW280P17700-17 IS INTERCHANGEABLE WITH GS26D-1

03/03 NAS 9-1100

δ, Ψ, θ —— USE NEXT AVAILABLE NOTE NO.

α-α, λ-λ, *-*, Ω —— USE NEXT AVAILABLE SECTION LETTER

✦, ✦, ✦ —— THESE SYMBOLS ARE FOR IDENTIFICATION OF STANDOFF TYPE ON E.O. ONLY DO NOT ADD TO DWG

LM	LDW280-51553	LM-1(31)	1	LM	LDW280-51509	LM-1(31)	1
MODEL	NEXT ASSY	MODULE NO.	REQD PER MODULE	MODEL	NEXT ASSY	MODULE NO.	REQD PER MODULE
PART NO. LDW280-51658-9				PART NO. LDW280-51658-7			

REVISE M/B AS SHOWN ABOVE TO AGREE WITH CHANGES SHOWN IN FIELD OF E.O.

DESCRIPTION CONT'D IN NOTE 2 REPLACED, BOND WITH FASTEN, LDW280P17700-7 WITH -17, & (AS SHOWN WITH EPON 934 PER LSP-14-22500) WITH (PER LS280-14)
IN NOTE 3 REMOVED LDW280P17936-43 & -51, REPLACED LDW280P17462 WITH -11 & LDW280P17936-29 WITH GT535L-HA-0250

THIS IS AN ORIGINAL E.O.

(2)

DETAIL SPEC REQD ☐ CLASS II ENGRG CHG ☑ CLASS I ENGRG CHG ☐
CONTROL INFO NO. LDW280A-0182

REASON FOR EO
ADDITIONAL THERMAL SHIELDING REQUIREMENTS

DESCRIPTION OF EO
REMOVED -1, -3, & -5
ADDED -7, -9, -11, -13, -15 & -17
REMOVED DETAIL F, SECT. H-H, D-D, & M-M ; ADDED SECT. α-α, *-*, λ-λ, & DETAIL Ω
REMOVED NOTE 4 & ADDED NOTES δ, Ψ, & θ ; REVISED NOTES 2 & 3 (CONTINUED ABOVE)

GRUMMAN EO RELEASE C 11/86

MODEL	PROCURING ACT. NO.	GAEC UNIT NO.	SUB CONTR UNIT NO.
LM	LM-1 (31)		

DRAWING REVISION REQD: ✓ REVISE DWG; RECORD EO
DISPOSITION OF PARTS: -1 & -3 REWORK; -5 SCRAP
BY / DATE: 11/2/66 V.D.I.; 11/8/66 SUPPORT THERMO; RELIAB GROUP; 11/8/66 GROUP LEADER; 11/8/66 STRESS GROUP; LIAISON ENGRG; 11-8-66 PROJ ENGR; GOVT

PRIORITY C
DRAWING TITLE STANDOFF INSTL D.S. - AFT - THERMAL
ENGINEERING ORDER
DRAWING NO LDW280-51658
EO NO A2

ISSUED BY J. BUKOWSKI (EXT 1153) SECTION Y.D.I.   GROUP NO. 335   PL 35
CODE IDENT NO. 26512
GRUMMAN AIRCRAFT ENGINEERING CORP
BETHPAGE, L. I., N. Y.

ENG 38.3 REV 3-65

THIS IS AN ORIGINAL E.O.

E.O. LDW280-51658

ENG 32.1 REV 3-65

GRUMMAN AIRCRAFT ENGINEERING CORP.
CODE IDENT NO. 26512
ENGINEERING ORDER

DWG. NO. LDW280-51658
EO NO. A5
CONTROL INFO NO. LDW280A-4310

ON-11 REMOVE LDW280P17524-1; 6 PLCS

THERMAL SHLD
2

DETAIL SPEC REQ	☐	CL II ENGRG CHG	☐	CL I ENGRG CHG	☐

REASON FOR EO: TO MAKE DWG. AGREE WITH TEMPLATE

DESCRIPTION OF EO: ON-11 REMOVED LDW280P17524-1; 6 PLCS

GAEC EO RELEASE: ⑩ 12/13/66

MODEL	EFFECTIVITY: PROCURING ACTIVITY NO.	GAEC UNIT NO.	SUB CONTR UNIT NO.
LM		LM-1(31)	

DRAWING CHANGE REQD: REVISE DWG	RECORD EO	DISPOSITION OF PARTS: REWORK	SCRAP
✓		NOT	REQ'D

APPROVED BY	Jaf	V.J.D.		JMS	WM			
DATE	12/13/66	12/13		12/13/66	12/13/66		12/13	12/13/66
1	VD1	~~SUPPORT~~ THERM	RELIAB. GROUP	GROUP LEADER	STRESS GROUP	LIAISON ENGRG	PROJ ENGRG	GOVT

PRIORITY: C
DRAWING TITLE: STANDOFF INST'L D/S AFT THERMAL
DRAWING NO. LDW280-51658
EO NO. A5

ISSUED BY T. AMBROSIO/STRAKOSCH
SECTION V. D. 1
GROUP NO. 335
PL 35

01
NAS 9-1100

B ✳

ENG 38.1 REV 3-65

GRUMMAN AIRCRAFT ENGINEERING CORP.
CODE IDENT NO. 26512
ENGINEERING ORDER

DWG. NO. LDW280 51658
EO NO. B1
CONTROL INFO NO LM5-11987

ON-7 ASSY

ADD LDW280-23712-7 ASSY & REMOVE -LDW280P17572-23
PICK UP EXISTING FASTENERS. (TYP. 4 PLACES)

RELEASED BY LIAISON

5 C

DETAIL SPEC REQ	☐	CL II ENGRG CHG	☑	CL I ENGRG CHG	☐

REASON FOR EO: TO PREVENT BREAKAGE OF STANDOFFS

DESCRIPTION OF EO: ON-7 ASSY ADDED LDW280-23712-5 & REMOVE LDW280 P17572-23. (TYP. 4 PLACES)

GAEC EO RELEASE: JK

MODEL	EFFECTIVITY PROCURING ACTIVITY NO.	GAEC UNIT NO.	SUB CONTR UNIT NO.
LM		LM1(31)	

DRAWING CHANGE REQD: REVISE DWG	RECORD EO	DISPOSITION OF PARTS: REWORK	SCRAP
✓		✓	

	SUPPORT	RELIAB. GROUP	GROUP LEADER	STRESS GROUP	LIAISON ENGRG	PROJ ENGRG	GOVT
APPROVED BY: WT			~	WJM	CH		
DATE: 3/10/67			~	3/15/67	3-1-67	3-22-67	C-K-67
3 VD1							

PRIORITY: C
DRAWING TITLE: SHIELD INST D/S AFT — THERMAL
DRAWING NO.: LDW280-51658
EO NO.: B1

ISSUED BY DON RAGAS X6510 SECTION VD1 GROUP NO. 335 PL 5

01 NAS 9-1100

B

ENG 32.1 REV 3-65

GRUMMAN AIRCRAFT ENGINEERING CORP.
CODE IDENT NO. 26512
ENGINEERING ORDER

DWG. NO. LDW280-51658
EO NO. B2
CONTROL INFO NO. LDW280A59S2

IN F/D & B/M FOR -17 ADD LDW280P17462-51 BLANKET ASSY

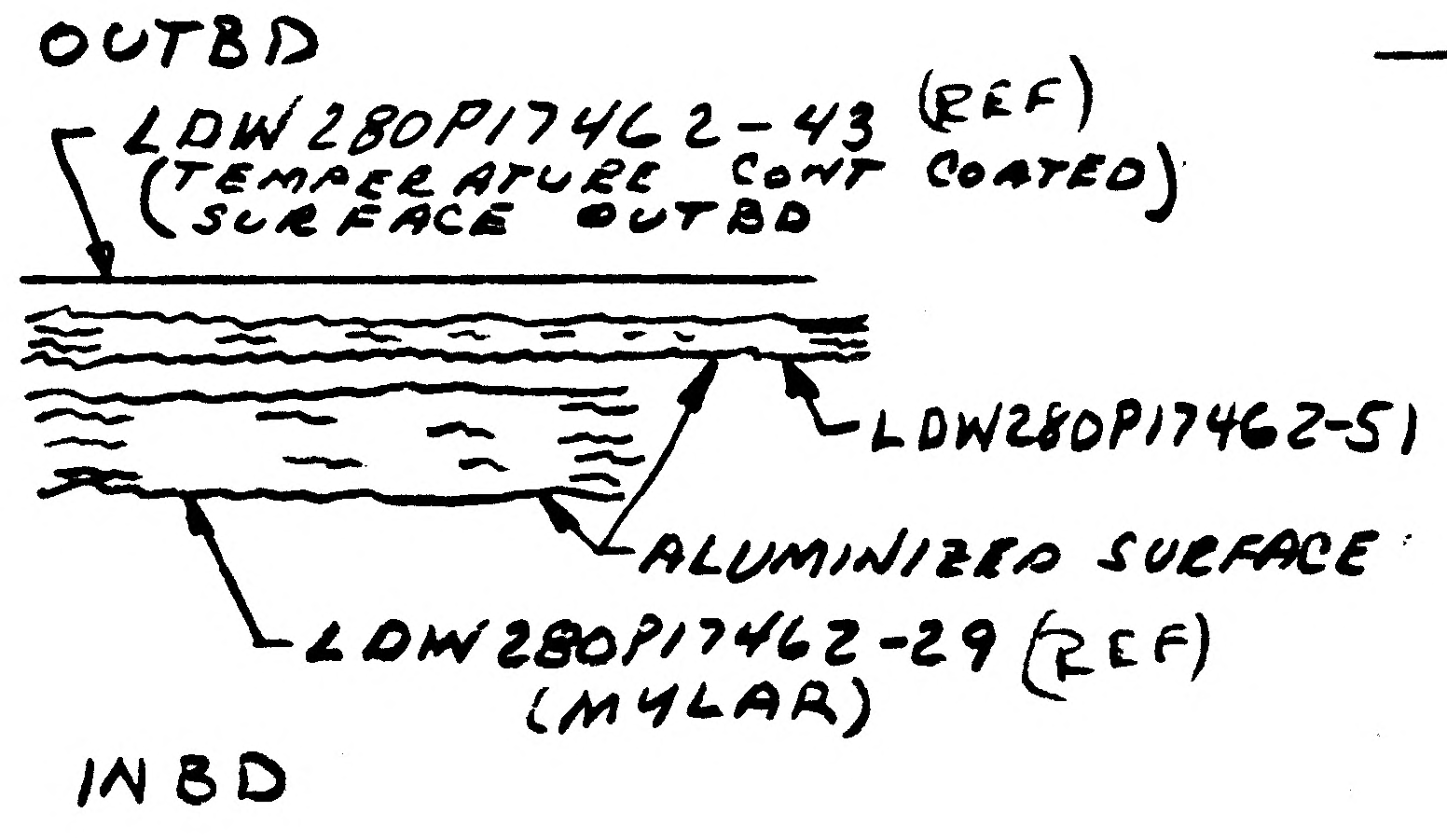
OUTBD
LDW280P17462-43 (REF)
(TEMPERATURE CONT COATED)
(SURFACE OUTBD
LDW280P17462-51
ALUMINIZED SURFACE
LDW280P17462-29 (REF)
(MYLAR)
INBD

SECT Δ-Δ
ADD

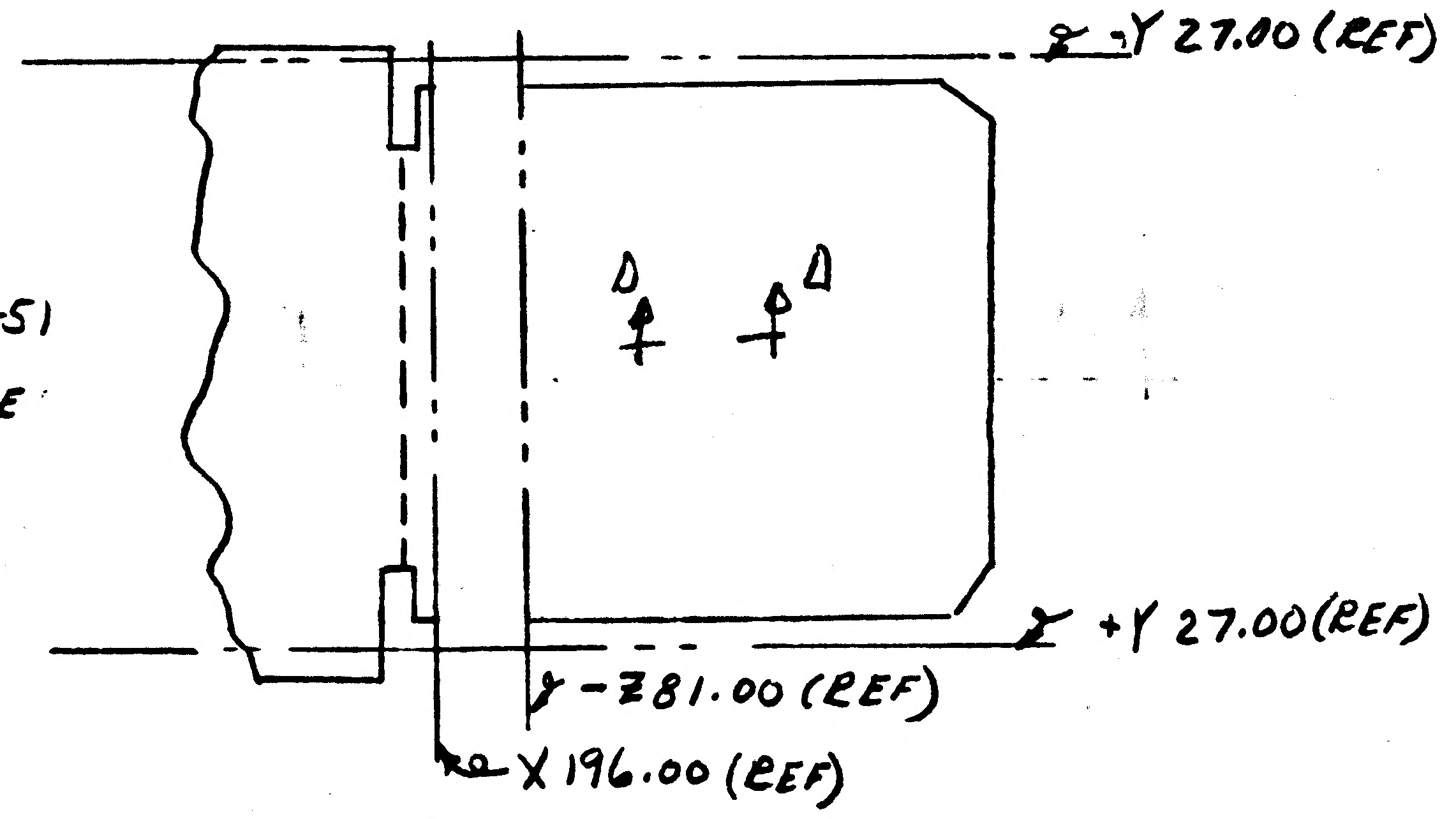
-Y 27.00 (REF)
Δ
Δ
+Y 27.00 (REF)
Z -381.00 (REF)
X 196.00 (REF)

* REWORK AS SHOWN

Δ: NEXT AVAIL LTR

DETAIL SPEC REQ	☐	CL II ENGRG CHG	☑	CL I ENGRG CHG	☐	LCD 19-1135 5

REASON FOR EO: ADDITIONAL THERMAL PROTECTION (LCR19-1135)

DESCRIPTION OF EO: IN F/D & B/M FOR -17 ADDED LDW280P17462-51

Ⓡ C GAEC EO RELEASE: JK 3/23/7

MODEL	EFFECTIVITY PROCURING ACTIVITY NO.	GAEC UNIT NO.	SUB CONTR UNIT NO.
LM		LM-1(31)	

DRAWING CHANGE REQD: REVISE DWG ✓ | RECORD EO

DISPOSITION OF PARTS: REWORK * | SCRAP

APPROVED BY	JAP	M.S.			W		DAM	AC
DATE	3/16/67	3/21/6		3/16/67	3/20/67		3/24/67	3-23-67
5	VDI	THERMAS SUPPORT	RELIAB. GROUP	GROUP LEADER	STRESS GROUP	LIAISON ENGRG	PROJ ENGRG	~~CONF.~~

PRIORITY: C

DRAWING TITLE: BLANKET ASSY DESCENT STAGE AFT THERMAL SHIELD

DRAWING NO.: LDW280-51658

EO NO.: B2

ISSUED BY H.PALLMEYER / J.STRAKOSCH SECTION VEH DES INT GROUP NO. 335 PL 25

01
NAS 9-1100

ENG 32.2 REV 3-65

GRUMMAN AIRCRAFT ENGINEERING CORP.
CODE IDENT NO. 26512
ENGINEERING ORDER

DWG. NO. LDW280-51658 EO NO. B3
CONTROL INFO NO. LDW280A-6706

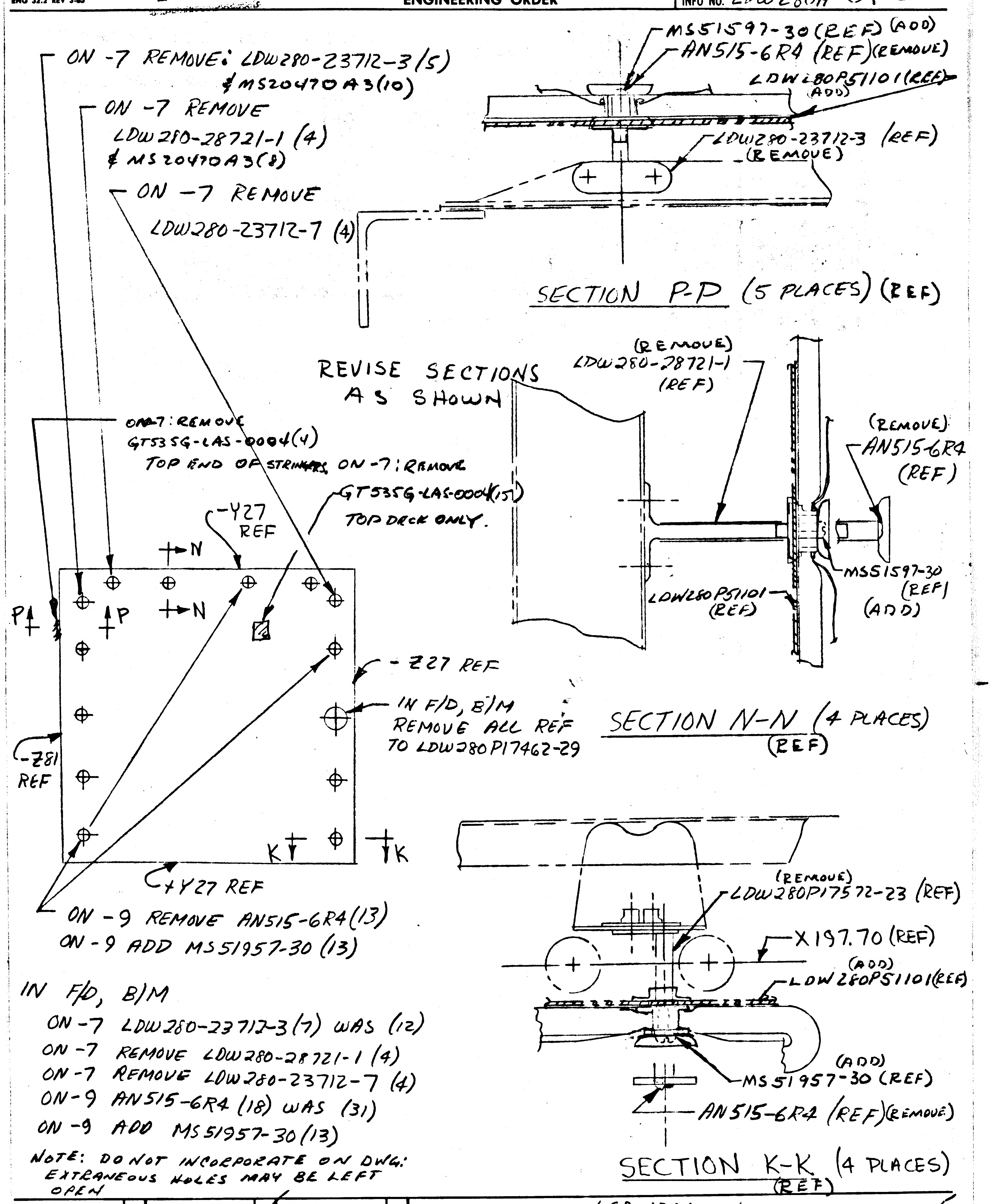
ON -7 REMOVE: LDW280-23712-3 (5) & MS20470A3(10)
ON -7 REMOVE LDW280-28721-1 (4) & MS20470A3(8)
ON -7 REMOVE LDW280-23712-7 (4)
MS51597-30 (REF) (ADD)
AN515-6R4 (REF) (REMOVE)
LDW280P51101 (REF) (ADD)
LDW280-23712-3 (REF) (REMOVE)
SECTION P-P (5 PLACES) (REF)
REVISE SECTIONS AS SHOWN
(REMOVE) LDW280-28721-1 (REF)
(REMOVE) AN515-6R4 (REF)
MS51597-30 (REF) (ADD)
LDW280P51101 (REF)
SECTION N-N (4 PLACES) (REF)
ON-7: REMOVE GT535G-LAS-0004(4) TOP END OF STRINGERS
ON -7: REMOVE GT535G-LAS-0004(15) TOP DECK ONLY.
-Y27 REF
N
N
P
P
-Z27 REF
IN F/D, B/M REMOVE ALL REF TO LDW280P17462-29
-Z81 REF
K
K
+Y27 REF
ON -9 REMOVE AN515-6R4(13)
ON -9 ADD MS51957-30 (13)
(REMOVE) LDW280P17572-23 (REF)
X197.70 (REF)
(ADD) LDW280P51101 (REF)
(ADD) MS51957-30 (REF)
AN515-6R4 (REF) (REMOVE)
SECTION K-K (4 PLACES) (REF)

IN F/D, B/M
ON -7 LDW280-23712-3 (7) WAS (12)
ON -7 REMOVE LDW280-28721-1 (4)
ON -7 REMOVE LDW280-23712-7 (4)
ON -9 AN515-6R4 (18) WAS (31)
ON -9 ADD MS51957-30 (13)

NOTE: DO NOT INCORPORATE ON DWG: EXTRANEOUS HOLES MAY BE LEFT OPEN

DETAIL SPEC REQ	☐	CL II ENGRG CHG	☑	CL I ENGRG CHG	☐	LCD-1244 5

REASON FOR EO: TO PROVIDE FOR FITH SHIELD

DESCRIPTION OF EO: IN F/D, B/M ON-7 LDW280-23712-3 (7) WAS (12) MS20470A3 (18) REMOVE LDW280-28721-1 (4) & LDW280-23712-7 (4) ON-9 AN515-6R4 (18) WAS (31) ADDED MS51957-30 (13) REVISED SECTIONS P-P, N-N, & K-K, REM. GT535G-LAS-0004 (19)

GAEC EO RELEASE: C JK 5/2 7

MODEL	EFFECTIVITY: PROCURING ACTIVITY NO.	GAEC UNIT NO.	SUB CONTR UNIT NO.
LM		LM-1 (31)	

DRAWING CHANGE REQD: REVISE DWG	RECORD EO	DISPOSITION OF PARTS: REWORK	SCRAP
✓			✓

APPROVED BY								
DATE	5/2/67	5/2/67		5/2/67	5/2/67		5/2/67	5-2-67
5	VDI	~~SUPPORT~~ THERMO	RELIAB. GROUP	GROUP LEADER	STRESS GROUP	LIAISON ENGRG	PROJ ENGRG	AC

PRIORITY	DRAWING TITLE	DRAWING NO.	EO NO.
C	BLANKET INSTL — D.S. AFT THERMAL	LDW280-51658	B3

ISSUED BY E. FRANK / J. STRAKOSCH SECTION VDI GROUP NO. 335 PL 25

01
NAS 9-1100

ENG 32.1 REV 3-65

L M

GRUMMAN AIRCRAFT ENGINEERING CORP.
CODE IDENT NO. 26512
ENGINEERING ORDER

DWG. NO. LDW280-51658		EO NO. B4
CONTROL INFO NO. LDW280A 8143		

FOR -9 BLANKET INSTL ADD LDW280P18339-7 BLANKET ASSY
& LDW280P18339-23 TAPE ASSY

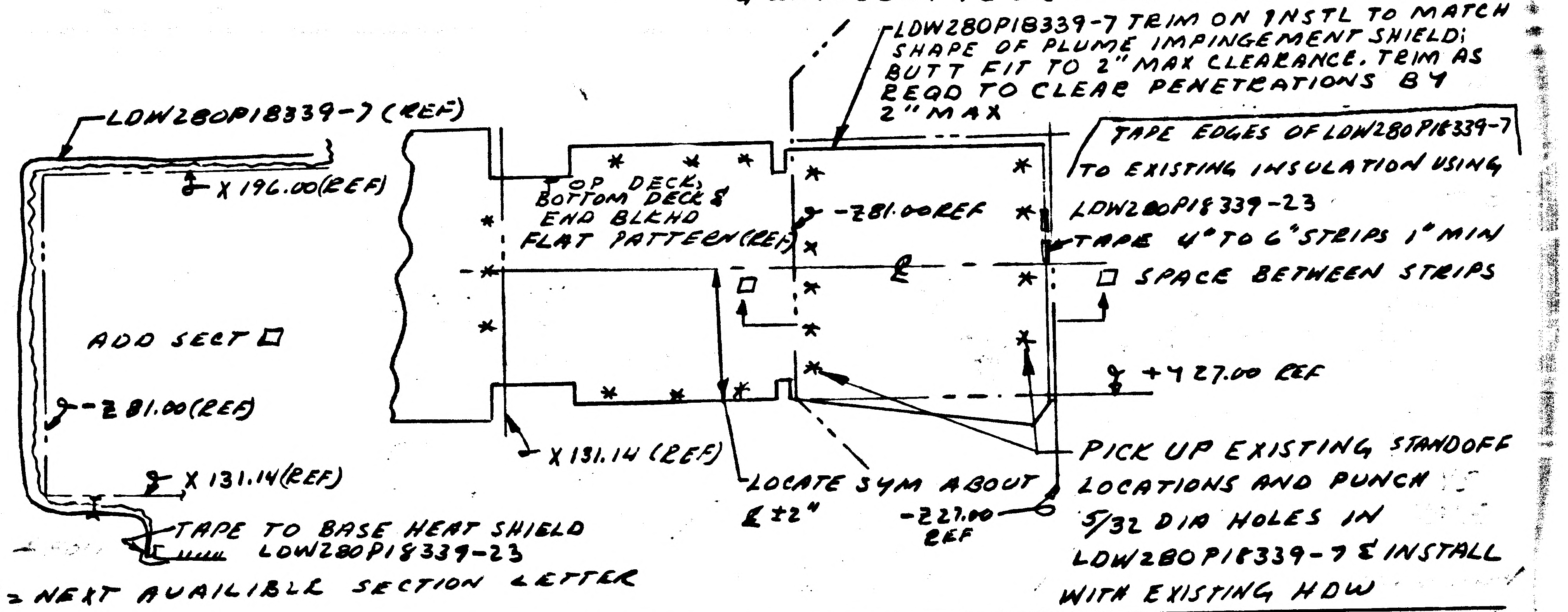

LDW280P18339-7 TRIM ON INSTL TO MATCH SHAPE OF PLUME IMPINGEMENT SHIELD; BUTT FIT TO 2" MAX CLEARANCE. TRIM AS REQD TO CLEAR PENETRATIONS BY 2" MAX
LDW280P18339-7 (REF)
X 196.00(REF)
TOP DECK, BOTTOM DECK & END BLKHD FLAT PATTERN(REF)
-Z81.00 REF
TAPE EDGES OF LDW280P18339-7 TO EXISTING INSULATION USING LDW280P18339-23 TAPE 4" TO 6" STRIPS 1" MIN SPACE BETWEEN STRIPS
℄
ADD SECT □
□
□
+Y27.00 REF
-Z81.00(REF)
X 131.14 (REF)
X 131.14(REF)
PICK UP EXISTING STANDOFF LOCATIONS AND PUNCH 5/32 DIA HOLES IN LDW280P18339-7 & INSTALL WITH EXISTING HDW
LOCATE SYM ABOUT ℄ ±2"
-Z27.00 REF
TAPE TO BASE HEAT SHIELD LDW280P18339-23

□ = NEXT AVAILIBLE SECTION LETTER

DETAIL SPEC REQ		CL II ENGRG CHG		CL I ENGRG CHG	✓ LCD-1847 5

REASON FOR EO	DESCRIPTION OF EO	GAEC EO RELEASE C
ADDITIONAL THERMAL PROTECTION	FOR -9 ADDED LDW280P18339-7 & -23 ADDED SECT □	JK 8/1/7

MODEL	EFFECTIVITY			DRAWING CHANGE REQD		DISPOSITION OF PARTS		APPROVED BY								
	~~PROCURING ACTIVITY~~ NO. EI	GAEC UNIT NO.	SUB CONTR UNIT NO.	✓		-9		DATE	7/31/67		7/31/67	7/31/67	7/31/67		7/31	8-1-67
LM	LFM-26	LM-1(31)		REVISE DWG	RECORD EO	REWORK	SCRAP		VDI	SUPPORT	~~RELIAB~~ GROUP	GROUP LEADER	STRESS GROUP	LIAISON ENGRG	PROJ ENGRG	~~CONT~~

PRIORITY	DRAWING TITLE	DRAWING NO.	EO NO.
C	BLANKET ASSY-D.S. AFT-THERMAL SHIELD	LDW280-51658	B4

ISSUED BY H. PALLMEYER / J. STRAKOSCH SECTION VEH DES INT GROUP NO. 335 PL 25

01 NAS 9-1100

LDW280-51659 A

MODEL OR END ITEM	NEXT ASSY	MODULE OR SER NO.	REQD PER MODULE OR END ITEM
LM	LDW280-51553	LM-1(31)	1
PART NO. LDW280-51659-9		GAEC SCH NO. 52–	

MODEL OR END ITEM	NEXT ASSY	MODULE OR SER NO.	REQD PER MODULE OR END ITEM
LM	LDW280-51509	LM-1(31)	1
PART NO. LDW280-51659-7		GAEC SCH NO. 50-1	

WORK PKG. FUNCTION NO. 110 5

SH REV STATUS: FOR DESCRIPTION OF REV SEE SUBQ SH

SHEET	1.00	1.10	2.00	3.00	4.00	5.00	6.00		
REV	A	A	A	A	A	A	A		
SHEET		1.11							
REV		A							
SHEET									
REV									

LAST SECT LTR USED R
LAST DASH NO. USED -17
GRUMMAN REL INFO A
PRIM NO. 207
JK(001) MP-14A 4/12/7

UNLESS OTHERWISE SPECIFIED DIMENSIONS ARE IN INCHES.
TOLERANCE UNLESS SPECIFIED
FRACTIONS - DECIMALS – ANGLES
± 1/32 ±.020 ±1/2°
ORIG DWG AUTH
DETAIL SPEC REQUIREMENT
CLASS II ENGRG CHANGE
CLASS I ENGRG CHANGE

CONTRACT NO. NAS9-1100
LINE ITEM
DOCUMENTATION TYPE II
DRAWN BY KULLER 2/3/67
THERMO GK 3/24/67
LAYOUT BY J. EVAN
CHECKED BY 2-16-67 GB
~~GR LEADER~~
VEH DES INT 3/18/67
STRUCTURE 4/10/67
STRUCTURE 4/11
WEIGHTS
PROJ ENGR D. A. McCloughan 3-28-67
REL GROUP

GRUMMAN AIRCRAFT ENGRG CORP
BETHPAGE, L. I., NEW YORK

BLANKET INSTALLATION
DESCENT STAGE +Y THERMAL
SHIELD

SIZE B
CODE IDENT NO. 26512
LDW280-51659 A
SCALE NONE
SHEET 1.00 OF 8

ENG 77.1 12-65

01

NAS 9-1100

REVISIONS

FOR CONTINUATION OF REVISIONS SEE SHEET 1.11

CHANGE LTR	ITEM NO.	SHEET NO.	ZONE	GRUMMAN INFO ONLY	DET SPEC	CLASS I	CLASS II	ENGRG ORDER	DESCRIPTION	EFFECTIVITY	DISPOSITION OF EXISTING PARTS		CHANGED BY AND DATE	ENGRG APPD	GOVT APPD
											REWORK	SCRAP			
A	1	1.00 THRU 6.00						EO A1	EOA1 INITIAL DRAWING RELEASE PARTS MADE FROM EO. ADDED SH 1.10 & SH 1.11	LM-1	NOT	REQD	KULLER 1-31-67		
	2	1.10, 5.00	5G 8G					EO A2	RELOCATED STANDOFF & ADDED INFO TO NOTE 1						
	3	1.10 & 3.00	7B					EO A3	ON -5 ASSY IN F/D & B/M REMOVED LDW280P17463-23 & ADDED LDW280P17463-29						
	4	1.00 THRU 6.00						EO A4	IN F/D & B/M ADDED -7, -9, -11, -13, -15, -17, LDW280P17463-55, LDW280-23713-19, LDW280P17523-3, LDW280P17463-57, LDW280P17524-1 & LDW280P17964-7. IN F/D ADDED NOTE #7, SHOWED REVISED LOCATIONS OF SEAMS & SEAM DETAILS. IN F/D & B/M REMOVED -1, -3 & -5, LDW280P17463-29, LDW280P17700-7, LDW280P17523-1, & LDW280P17936-47. IN F/D REMOVED NOTE #4. DELETED LDW280P17936-47 FROM NOTE #3. NOTE #2 WAS "BOND LDW280P17523-1 TO LDW280P17700-7 AS SHOWN WITH EPON 934 PER LSP14-22500." IN NOTE #1, GT535G-LAS-0004 WAS LDW280P17936-13. IN NOTE #3, GT535L-HA-0250 WAS LDW280P17936-29. ADDED LDW280P17463-39, GR11B-1 & GW10H-3. 5/32 DIA HOLES WERE 1/4 DIA HOLES. ADDED GW10H-1 & GB10J-1. REMOVED STANDOFFS LDW280P17523-1(3), LDW280P23712-1(4) & LDW280P23712-3(2). ADDED SECTION L-L, M-M & N-N		✓				
	5	1.10 & 3.00	1A					LEO280-374	ON DWG# LDW280-51659, ADDED GENERAL NOTE #8		NOT	REQD			
	6	1.10, 2.00, 3.00	6A 8A					EO A6	ON -11 REMOVED LDW280P17524-1; ON -9, LDW280P17964-3 WAS LDW280P17964-7 3 PLCS		✓	-7			
	7	1.10, 3.00							REF EO-A4, ADDED NOTE 9 & REMOVED LDW280-23713-19 & SECT. B-B		NOT	REQD			
	8	2.00, 3.00 4.00 & 5.00							IN F/D & B/M ADDED GS26D-1(41) & REMOVED LDW280P17700-17(41). IN F/D REVISED PICTURE OF SECT. A-A, C-C, F-F & G-G. IN SECT. N-N REMOVED DIM. 1 3/4 ± 1/4 & ADDED NOTE #10, #11 & #12. REVISED NOTE #2-GS26D-1 WAS LDW280P17700-17 & #3-USING ASTROQUARTZ THREAD. IN SECT. N-N ADDED CALLOUT 3/8 DIA. HOLE ON INSTL.	LM-1	NOT	REQD	NAKONIS 2/24/67	GB	Dam 3/28/67

CHG APPROVED	LTR	~~GROUP LDR~~	VEH DESIN	STRUCT	STRUCT	WEIGHTS	THERMO
	A		3/24/67	EG			3/24/67

GRUMMAN AIRCRAFT ENGRG CORP., BETHPAGE, L. I., NEW YORK

SIZE	CODE IDENT NO.		
B	26512	LDW280-51659	A

SCALE NONE

SHEET 1.10

ENG 77.16 3-66

01

NAS 9-1100

REVISIONS FOR CONTINUATION OF REVISIONS SEE SHEET ______

CHANGE LTR	ITEM NO.	SHEET NO.	ZONE	GRUMMAN INFO ONLY	DET SPEC	CLASS I	CLASS II	ENGRG ORDER	DESCRIPTION	EFFECTIVITY	DISPOSITION OF EXISTING PARTS		CHANGED BY AND DATE	ENGRG APPD	~~GOVT~~ APPD
											REWORK	SCRAP			
A	9	1.11,3,4,5 & 6							IN F/D ADDED VENT LOCATIONS PER LPC280-2 (17 PLACES)	LM-1	✓		NARONIS 3/13/67	DAM	

CHG APPROVED	LTR	GROUP LDR	VEH.DES.INT.	STRUCTURES	STRUCTURES	WEIGHTS	THERMO					
	A		JAS 3/24	3/24/67			3/24/67					

GRUMMAN AIRCRAFT ENGRG CORP., BETHPAGE, L. I., NEW YORK

SIZE	CODE IDENT NO.		
B	26512	LDW280-51659	A

SCALE NONE SHEET 1.11

ENG 77.16 3-66

01

NAS 9-1100

				-17	-15	-13	-11	-9	-7	PART NO.	I&T	CODE IDENT	NOMENCLATURE OR DESCRIPTION	MATERIAL	GOVT SPEC	COML SPEC	STOCK SIZE	PROCESS SYM	FINISH NO.	ZONE
								AR		RQ754-12	E		SEE NOTE #11							
									41	GT535G-LAS-0004	E		TAPE, FASTENER	GRUMMAN STD						
										MS20470A3	E		RIVET	STD PART						
								25		AN515-6R4			SCREW	STD PART						
							24			GW10H-3			WASHER	GRUMMAN STD						
							33			GW10H-1			WASHER							
							AR			GT835P-8			TAPE							
								2		GT535L-HA-0250			TAPE, FASTENER							
							AR			GS577A-1			STAPLE							
							24			GR11B-1			RETAINER							
							33			GB10J-1			BUSHING	GRUMMAN STD						
							41			GS26D-1			STANDOFF ASSY	GRUMMAN STD						
								3		LDW280P17964-3			COVER	SEE DWG						6A
																				10C
								25		LDW280P17575-11			RETAINER							10A
																				5G
							41			LDW280P17523-3			CAP							10C
						1				LDW280P17463-57			BLANKET ASSY							7B
					1					LDW280P17463-55			BLANKET ASSY							7B
				1						LDW280P17463-39			SKIN							4B
									12	LDW280-23712-3			STANDOFF ASSY							8F
									13	LDW280-23712-1			STANDOFF ASSY	SEE DWG						10A
							1			LDW280-51659-17			SKIN ASSY					NONE	NONE	8A
							1			-15			BLANKET ASSY							8A
							1			-13			BLANKET ASSY							8A
								1		-11			BLANKET ASSY							8A
										-9			BLANKET INSTL							8A
										LDW280-51659-7	E		STANDOFF INSTL					NONE	NONE	8A

QTY PER ASSEMBLY

SYM OR NO.	PROCESS SYM OR FINISH NO.	GRUMMAN SPEC OR MILITARY SPEC	SYM OR NO.	PROCESS SYM OR FINISH NO.	GRUMMAN SPEC OR MILITARY SPEC	SYM OR NO.	PROCESS SYM OR FINISH NO.	GRUMMAN SPEC OR MILITARY SPEC

I & T: IDENTIFICATION AND TRACEABILITY IN ACCORDANCE WITH NONE

GRUMMAN AIRCRAFT ENGRG CORP., BETHPAGE, L. I., NEW YORK

SIZE	CODE IDENT NO.		
B	26512	LDW280-51659	A
SCALE NONE		SHEET 2.00	

01 ✓ NAS 9-1100

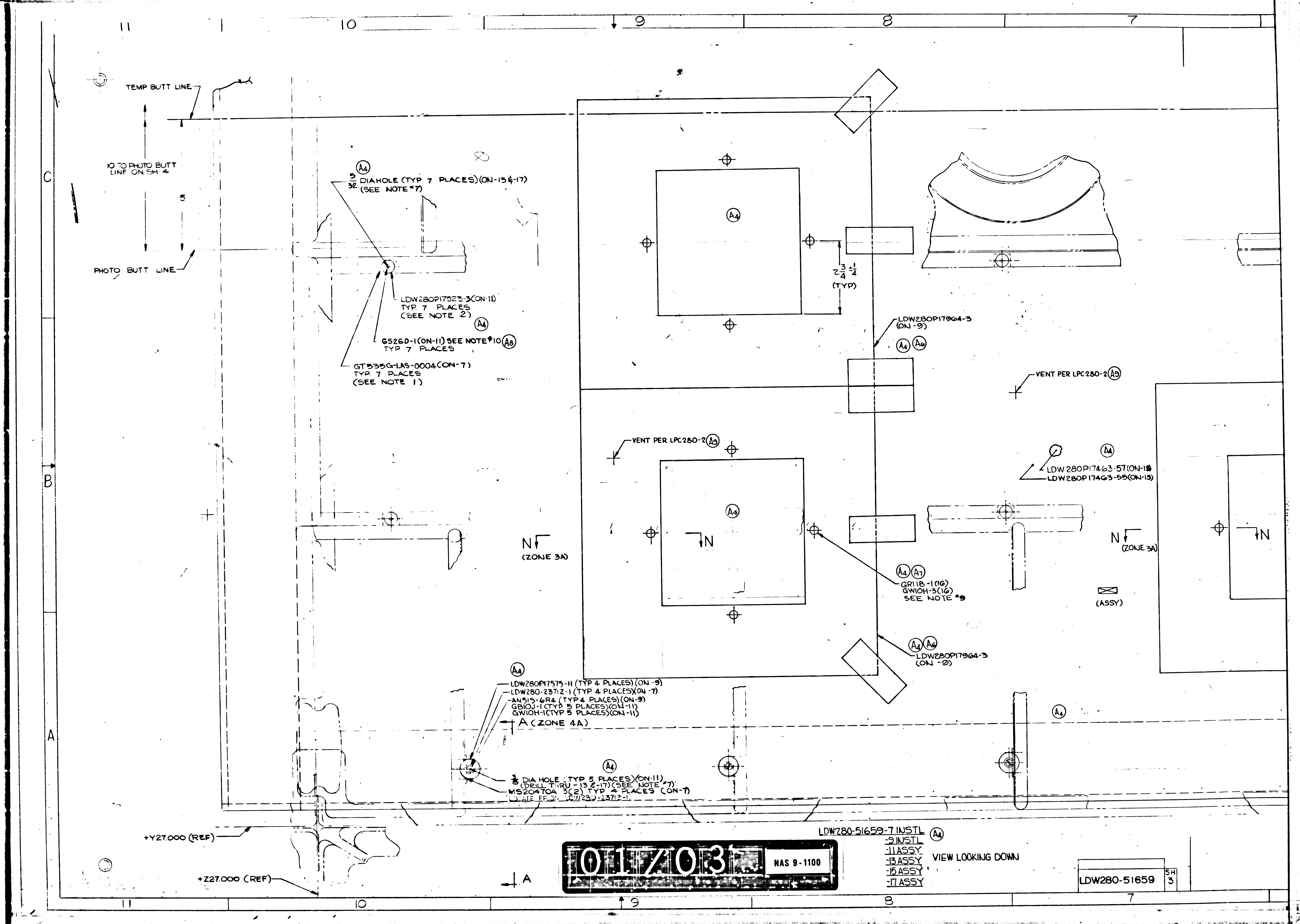
11
10
9
8
7
C
B
A
TEMP BUTT LINE
10 TO PHOTO BUTT LINE ON SH 4
5
PHOTO BUTT LINE
(A4)
5/32 DIAHOLE (TYP 7 PLACES)(ON-13&-17)
(SEE NOTE #7)
LDW280P17523-3(ON-11)
TYP. 7 PLACES
(SEE NOTE 2)
(A4)
GS26D-1(ON-11) SEE NOTE #10 (A8)
TYP 7 PLACES
GT535G-LAS-0004(ON-7)
TYP. 7 PLACES
(SEE NOTE 1)
(A4)
2 3/4 ±1/4
(TYP)
LDW280P17964-3
(ON -9)
(A4)(A6)
VENT PER LPC280-2 (A9)
VENT PER LPC280-2 (A9)
(A4)
(A4)
LDW280P17463-57(ON-13)
LDW280P17463-55(ON-15)
N
(ZONE 3A)
N
N
(ZONE 3A)
N
(A4)(A7)
GR11B-1(16)
GW10H-3(16)
SEE NOTE #9
(ASSY)
(A4)(A6)
LDW280P17964-3
(ON -9)
(A4)
LDW280P17575-11 (TYP 4 PLACES) (ON -9)
LDW280-23712-1 (TYP 4 PLACES)(ON -7)
AN515-6R4 (TYP 4 PLACES) (ON-9)
GB10J-1 (TYP 5 PLACES)(ON-11)
GW10H-1(TYP 5 PLACES)(ON-11)
A (ZONE 4A)
(A4)
(A4)
3/16 DIA HOLE (TYP 5 PLACES)(ON-11)
(DRILL THRU - 13 &-17)(SEE NOTE #7)
MS20470A 3(2) TYP 4 PLACES (ON-7)
LOCATE FROM LDW280-23712-1
+Y27.000 (REF)
+Z27.000 (REF)
A
01/03
NAS 9-1100
LDW280-51659-7 INSTL (A4)
-9 INSTL
-11 ASSY
-13 ASSY
-15 ASSY
-17 ASSY
VIEW LOOKING DOWN
LDW280-51659
SH 3

7
6
5
4
3
TEMP BUTT LINE
10 TO PHOTO BUTT
LINE ON SH 4
5
C
C
(ZONE 3B)
PHOTO BUTT LINE
80
30
-Z27.000(REF)
LDW280-28509 (REF)
A4
LDW280P17463-57(REF)
GT535G-LAS-0004(REF)
A4
LDW280P17463-39
(ON-17)
GS26D-1(REF)
LDW280P17523-3(REF)
A8
SECT C-C (ZONE 5C)
A4
C280-2 A9
A4
GT835P-8 (2"-4" LG)
(ON -11) (TYP)
A9
VENT PER LPC280-2
A4
P17463-57(ON-13)
P17463-55(ON-15)
A4
N
(ZONE 3A)
N
(ASSY)
GR11B-1 (8)
GW10H-3 (8)
SEE NOTE #9
A4 A7
A4 A8
LDW280P17964-3
(ON-9)
162
LDW280-28509(REF)
LDW280P17964-3(REF)
3/8 DIA HOLE LOCATE ON INSTL
LDW280-28698(REF)
GR11B-1(REF)
GW10H-3(REF)
A4
A8
LDW280-51659-11(REF)
SECT. N-N
ZONES 7B & 9B
ROTATED 90° CCW
GB10J-1(REF)
GW10H-1(REF)
LDW280-51659-11(REF)
LDW280P17463-57(REF)
LDW280-23712-1(REF)
+Y27.00 (REF)
LDW280-28560(REF)
LDW280-28509(REF)
X196.00(REF)
A8
SECT A-A (ZONE 9A)
A4
+Y27.000 (REF)
-Z27.000 (REF)
+Z FWD
-Y
+Y
+Y END BLKH
-Z
LDW280-51
(UPPER DEC
ENGRG REF ONLY
NO SCALE
LDW280-51659 SH 3
LDW280-51659 SH 3

02/03 NAS 9-1100

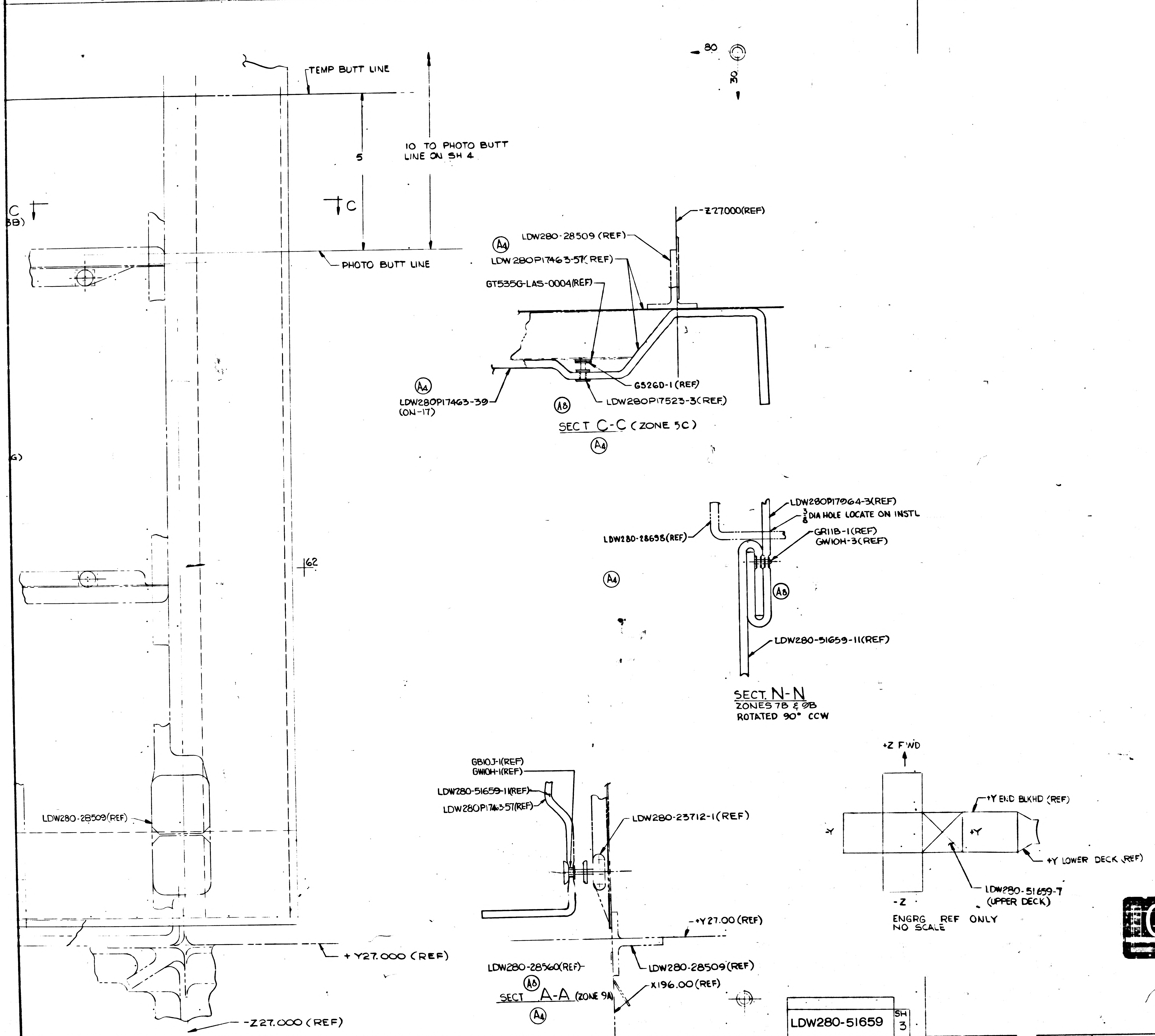

5
4
3
2
TEMP BUTT LINE
10 TO PHOTO BUTT LINE ON SH 4
5
C
(B)
PHOTO BUTT LINE
80
30
-Z27.000(REF)
LDW280-28509 (REF)
A4
LDW 280P17463-57(REF)
GT535G-LAS-0004(REF)
A4
LDW280P17463-39
(ON-17)
A8
GS26D-1 (REF)
LDW280P17523-3(REF)
SECT C-C (ZONE 5C)
A4
(G)
LDW280P17964-3(REF)
3/8 DIA HOLE LOCATE ON INSTL
LDW280-28698(REF)
GR11B-1(REF)
GW10H-3(REF)
A8
A4
62
LDW280-51659-11(REF)
SECT. N-N
ZONES 7B & 9B
ROTATED 90° CCW
GB10J-1(REF)
GW10H-1(REF)
LDW280-51659-11(REF)
LDW280P17463-57(REF)
LDW280-28509(REF)
LDW280-23712-1(REF)
+Y27.00 (REF)
+ Y27.000 (REF)
LDW280-28560(REF)
LDW280-28509(REF)
A8
SECT A-A (ZONE 9A)
A4
X196.00(REF)
-Z27.000 (REF)
+Z FWD
+Y END BLKHD (REF)
-Y
+Y
+Y LOWER DECK (REF)
LDW280-51659-7
(UPPER DECK)
-Z
ENGRG REF ONLY
NO SCALE
LDW280-51659
SH 3

NOTES:

1. BOND GT535G-LAS-0004 TO STRUCTURE AS SHOWN WITH EPON 934 PER LSP 4-22500. CURE RANGE I OR ROOM TEMP CURE FOR 7 DAYS PERMITTED.
2. BOND LDW280P17523-3 TO GS26D-1 PER LPC280-14 AS SHOWN WITH EPON 934 PER LSP14-22500
3. GT535L-HA-0250 SEW TO LDW280P17463-21 AT 3/16 ± 1/16 FROM EDGES OF GT535L-HA-0250 IN ACCORDANCE WITH FED STD #751a & STITCH TYPE 301 USING ASTROQUARTZ THREAD.
4. DELETE.
5. NO TOOLING HOLES PERMITTED IN PARTS.
6. TOLERANCE ON INSTL LOCATION OF BLANKET TRIM LINES IS ±1/2
7. ALL ALUMINIZED MYLAR PARTS SHALL BE MADE WITH EXPANDED DIMENSIONS. THE EXPANDED RATIO IS TO BE .050 IN/IN.
   E.G. 10.000 SHN EXPANDS TO 10.500
   ALL ALUMINIZED POLYMIDE PARTS SHALL BE MADE WITH EXPANDED DIMENSIONS. THE EXPANDED RATIO IS TO BE .070 IN./IN.
   E.G. 10.000 SHN EXPANDS TO 10.700
8. WRAP STEMS OF ALL STANDOFFS WHICH ARE RIVETED TO STRUCTURE WITH ONE LAYER OF GT835M-8 TAPE ON LDW280-51659-7 STANDOFF INSTL
9. SEAM, TAPE, INSTALL SNAPS PER LPC280-3
10. LDW 280P17700-17 MAY BE USED AS AN ALTERNATE FOR GS26D-1.
11. ASTROQUARTZ RQ754-12 THREAD MAY BE PURCHASED FROM DODGE FIBERS CORP P.O. BOX 124, HOOSICK FALLS, N.Y. CODE IDENT NO. 05712.
12. FINAL SIZE (WITH FOLD AND SEAM LOCATION) OF BLANKET ASSEMBLIES SHALL BE DETERMINED FROM APPROVED MASTER TEMPLATE (AND/OR FULL SIZE MOCKUP).

MANUFACTURING OPERATIONS UNLESS OTHERWISE SPECIFIED NOTES CHECKED ✓ APPLY TO THIS DWG.	
RUBBER STAMP PART NUMBER AND ALL OTHER MARKINGS IN REGION MARKED ▭ USE BOTH SIDES IF NECESSARY.	✓
FILLET AND INSIDE CORNER RADII TOLERANCES .016R TO .062R ± .000 .063R TO .250R ± .015 OVER .250R ± .030	
DEPTH SHOWN FOR TAPPED HOLES IS FULL THDS. 2-3 IMP THDS. BEYOND PERMISSIBLE.	
EXTERNAL THREAD LENGTH SHOWN INCLUDES 2 IMPERFECT THREADS MAX.	
DO NOT CADMIUM PLATE & PAINT HOLES OR SURFACES MARKED WITH DOUBLE ASTERISK.	
MISMATCH STEP OF ± .005 PERMISSIBLE DUE TO CHANGE OF CUTTERS AT INSIDE INTERSECTING SURFACES.	
DIAMETERS MARKED MUST BE CONCENTRIC WITHIN FULL INDICATOR READING	
HOLES MUST BE KEPT FREE OF CHROME PLATING SOLUTION.	
ALL DIMENSIONS SHOWN TO BE MET AFTER CADMIUM PLATING. THICKNESS OF PLATE .0003 MIN. TO .0005 MAX. MIN. THICKNESS TO BE .0002 ON THREADED AREAS. NO ALLOWANCE FOR PLATING IN HOLES	
125 SURFACE ROUGHNESS INCLUDING REAMED HOLES PER MIL-STD-10	
250 FOR ALL DRILLED HOLES	
REMOVE ALL BURRS. BREAK ALL EDGES .015-.031	
INSPECTION INFORMATION MINIMUM PERMISSIBLE AVERAGE EDGE DISTANCE MARKED .16	
SYMBOL ƒ DENOTES SURFACE TO BE MACHINED	
UNLESS OTHERWISE SPECIFIED TOLERANCE ON FLANGES IS ± 1/32	
LENGTHS OF AN, NAS & MS AL ALY RIVETS SHORTER THAN 1 INCH ARE NOT SPECIFIED.	✓
TOLERANCE ON LOFTED DELINEATIONS IS ± 1/32 UNLESS OTHERWISE NOTED	✓

DWG SIZE 34 X 106

PRINTING INFO ONLY
FULL SIZE SHEET AREA (36 X 110) 27 F

PRINT TRIM LINE

03/03

NAS 9-1100

LDW280-51659A

LDW280-51659A

	GRUMMAN AIRCRAFT ENGRG CORP., BETHPAGE, L. I., NEW YORK
LM	SIZE J · CODE IDENT NO. 26512 · LDW280-51659 · A
MODEL OR END ITEM	SCALE FULL · SHEET 3 OF 3

FOR PHOTO REPRODUCTION

THIS IS AN ORIGINAL DRAWING 3 FRAMES

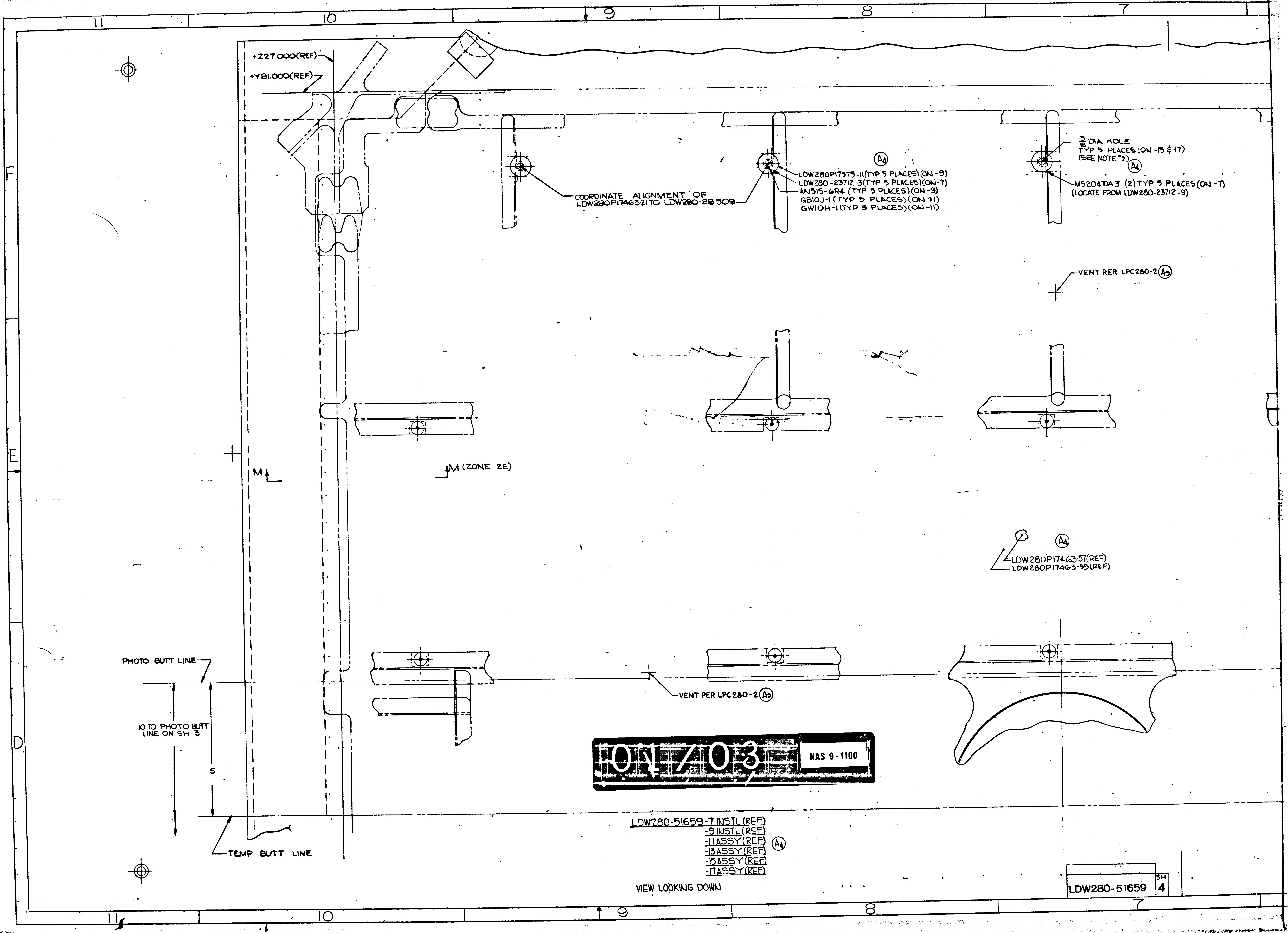
+Z27.000(REF)
+Y81.000(REF)
COORDINATE ALIGNMENT OF LDW280P17463-21 TO LDW280-28509
LDW280P17575-11(TYP 5 PLACES)(ON -9)
LDW280-23712-3(TYP 5 PLACES)(ON -7)
AN515-6R4 (TYP 5 PLACES)(ON -9)
GB10J-1 (TYP 5 PLACES)(ON -11)
GW10H-1 (TYP 5 PLACES)(ON -11)
A4
$\frac{3}{8}$ DIA HOLE TYP 5 PLACES (ON -13 & -17) (SEE NOTE #7)
A4
MS20470A3 (2) TYP 5 PLACES (ON -7) (LOCATE FROM LDW280-23712-9)
VENT PER LPC280-2 A9
M
M (ZONE 2E)
A4
LDW280P17463-57(REF)
LDW280P17463-55(REF)
PHOTO BUTT LINE
10 TO PHOTO BUTT LINE ON SH 3
5
TEMP BUTT LINE
VENT PER LPC280-2 A9
F
E
D
11
10
9
8
7

01/03 NAS 9-1100

LDW280-51659-7 INSTL (REF)
-9 INSTL (REF)
-11 ASSY (REF)
-13 ASSY (REF)
-15 ASSY (REF)
-17 ASSY (REF)
A4

VIEW LOOKING DOWN

LDW280-51659 SH 4

7
6
5
4
3
Z27.000(REF)
+Y81.000(REF)
D
3/8 DIA HOLE
TYP 5 PLACES (ON -13 & -17)
(SEE NOTE #7)
A4
MS20470A3 (2) TYP 5 PLACES (ON -7)
LOCATE FROM LDW280-23712-9)
D (ZONE 3D)
A4
VENT PER LPC280-2 A9
LDW280-28509 (REF)
62
A4
LDW280P17463-57(REF)
LDW280-28509 (REF)
GB10J-1
GW10H-1
(TYP 6 PLACES)(ON-11)
LDW280P17575-11(REF)
LDW280-23712-1(REF)
+Z27.00 (REF)
+Y81.00(REF)
A8
SECT E-E (ZONE 6G SH 5)
A4
LDW280P17463-57(REF)
+Z27.00(REF)
X196.00 (REF)
+Y81.00(REF)
A4
LDW280P17463-57(REF)
LDW280P17575-11(REF)
LDW280-28509 (REF)
LDW280-23712-3(REF)
(REF)
(REF)
A8
GS26D-1 (ON-11) SEE NOTE #10
TYP 10 PLACES
A4
LDW280P17523-3 (ON -11)
TYP 10 PLACES (SEE NOTE 2)
GT535G-LAS-0004 (ON -7)
TYP 10 PLACES
(SEE NOTES 1 & 7)
VENT PER LPC280-2 A9
A4
5/32 DIA HOLE (TYP 10 PLACES) (ON-13 & -17)
(SEE NOTE #7)
PHOTO BUTT LINE
5.
10 TO PHOTO BUTT LINE ON SH 3
TEMP BUTT LINE
SECT D-D (ZONE 6F)
280-51659 SH 4
LDW280-51659 SH 4

02/03 NAS 9-1100

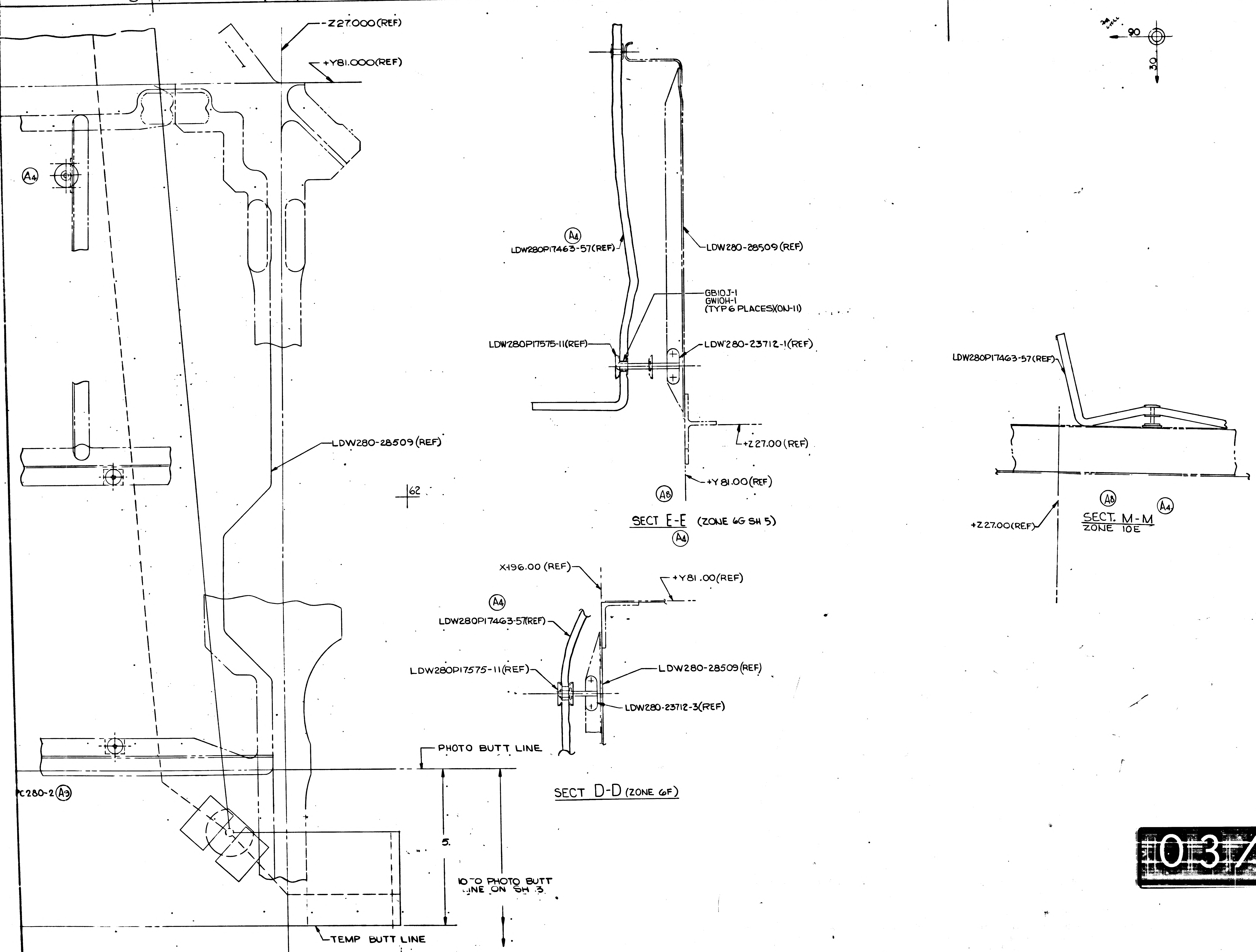
Z27.000(REF)
+Y81.000(REF)
A4
LDW280P17463-57(REF)
LDW280-28509(REF)
GB10J-1
GW10H-1
(TYP 6 PLACES)(ON-11)
LDW280P17575-11(REF)
LDW280-23712-1(REF)
+Z27.00(REF)
+Y81.00(REF)
A8
LDW280-28509(REF)
62
90
30
LDW280P17463-57(REF)
+Z27.00(REF)
X196.00 (REF)
+Y81.00(REF)
LDW280P17463-57(REF)
LDW280P17575-11(REF)
LDW280-28509(REF)
LDW280-23712-3(REF)
PHOTO BUTT LINE
5.
10 TO PHOTO BUTT LINE ON SH 3
TEMP BUTT LINE
C280-2 A3

SECT E-E (ZONE 6G SH 5)
A4

SECT. M-M A8 A4
ZONE 10E

SECT D-D (ZONE 6F)

03/03 NAS 9-1100

MANUFACTURING OPERATIONS

UNLESS OTHERWISE SPECIFIED
NOTES CHECKED √ APPLY TO THIS DWG.

PART NUMBER
AND ALL OTHER MARKINGS
IN REGION MARKED
USE BOTH SIDES IF NECESSARY.

FILLET AND INSIDE CORNER
RADII TOLERANCES
.010R TO .062R ± .010
.063R TO .250R ± .015
OVER .250R ± .030

DEPTH SHOWN FOR TAPPED HOLES IS FULL THDS. 2-3 IMP THDS. BEYOND PERMISSIBLE.

EXTERNAL THREAD LENGTH SHOWN INCLUDES 2 IMPERFECT THREADS MAX.

DO NOT CADMIUM PLATE & PAINT HOLES OR SURFACES MARKED WITH DOUBLE ASTERISK.

MISMATCH STEP OF ± .005 PERMISSIBLE DUE TO CHANGE OF CUTTERS AT INSIDE INTERSECTING SURFACES.

DIAMETERS MARKED MUST BE CONCENTRIC WITHIN FULL INDICATOR READING

HOLES MUST BE KEPT FREE OF CHROME PLATING SOLUTION.

ALL DIMENSIONS SHOWN TO BE MET AFTER CADMIUM PLATING. THICKNESS OF PLATE .0003 MIN. TO .0005 MAX. MIN. THICKNESS TO BE .0002 ON THREADED AREAS. NO ALLOWANCE FOR PLATING IN HOLES

125 SURFACE ROUGHNESS INCLUDING REAMED HOLES PER MIL-STD-10

250 FOR ALL DRILLED HOLES

REMOVE ALL BURRS.
BREAK ALL EDGES .015-.030

INSPECTION INFORMATION
MINIMUM PERMISSIBLE AVERAGE EDGE DISTANCE MARKED IS

SYMBOL ∱ DENOTES SURFACE TO BE MACHINED

UNLESS OTHERWISE SPECIFIED TOLERANCE ON FLANGES IS ± 1/32

LENGTHS OF AN, NAS & MS AL ALY RIVETS SHORTER THAN 1 INCH ARE NOT SPECIFIED.

TOLERANCE ON LOFTED DELINEATIONS IS

DWG SIZE 34 X 106
PRINTING INFO ONLY
FULL SIZE SHEET AREA (36 X 1(1.0))=
PRINT TRIM LINE
27.75
6.9

LDW280-51659A

LDW280-51659 SH 4

	GRUMMAN AIRCRAFT ENGRG CORP., BETHPAGE, L.I., NEW YORK			
LM	SIZE J	CODE IDENT NO. 26512	LDW280-51659	A
MODEL OR END ITEM	SCALE FULL		SHEET 4.00	

FOR PHOTO REPRODUCTION

THIS IS AN ORIGINAL DRAWING 3 FRAM

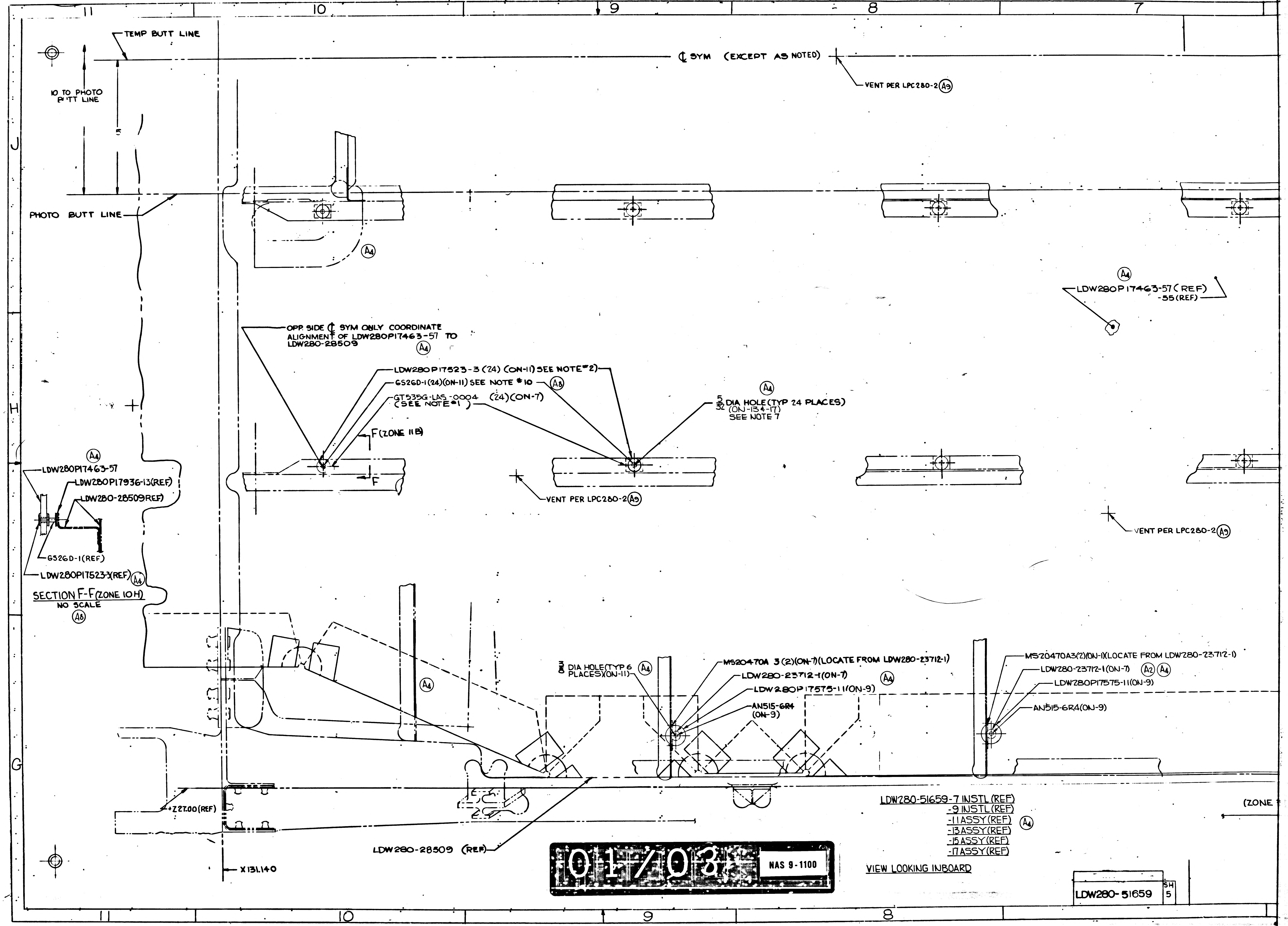
11
10
9
8
7
J
H
G
TEMP BUTT LINE
℄ SYM (EXCEPT AS NOTED)
VENT PER LPC280-2 (A9)
10 TO PHOTO BUTT LINE
5
PHOTO BUTT LINE
(A4)
LDW280P17463-57 (REF)
-55 (REF)
OPP. SIDE ℄ SYM ONLY COORDINATE ALIGNMENT OF LDW280P17463-57 TO LDW280-28509 (A4)
LDW280P17523-3 (24) (ON-11) SEE NOTE #2
GS26D-1 (24)(ON-11) SEE NOTE #10 (A8)
GT535G-LAS-0004 (24)(ON-7) (SEE NOTE #1)
5/32 DIA HOLE (TYP 24 PLACES) (ON-13 & -17) SEE NOTE 7 (A4)
F (ZONE 11B)
F
VENT PER LPC280-2 (A9)
VENT PER LPC280-2 (A9)
(A4)
LDW280P17463-57
LDW280P17936-13(REF)
LDW280-28509REF)
GS26D-1(REF)
LDW280P17523-3(REF) (A4)
SECTION F-F (ZONE 10H)
NO SCALE
(A8)
(A4)
3/16 DIA HOLE (TYP 6 PLACES)(ON-11) (A4)
MS20470A3(2)(ON-7)(LOCATE FROM LDW280-23712-1)
LDW280-23712-1(ON-7) (A4)
LDW280P17575-11(ON-9)
AN515-6R4 (ON-9)
MS20470A3(2)(ON-1)(LOCATE FROM LDW280-23712-1)
LDW280-23712-1(ON-7) (A2) (A4)
LDW280P17575-11(ON-9)
AN515-6R4(ON-9)
Z27.00(REF)
X131.140
LDW280-28509 (REF)
LDW280-51659-7 INSTL (REF)
-9 INSTL (REF)
-11 ASSY (REF)
-13 ASSY (REF)
-15 ASSY (REF)
-17 ASSY (REF)
(A4)
VIEW LOOKING INBOARD
(ZONE

01/03

NAS 9-1100

LDW280-51659 SH 5

7
6
5
4
3
TEMP BUTT LINE
90
30
10 TO PHOTO BUTT LINE
5
PHOTO BUTT LINE
VENT PER LPC280-2 (A9)
(A4)
LDW280P17463-57 (REF)
-55 (REF)
VENT PER LPC280-2 (A9)
72
VENT PER LPC280-2 (A9)
(2)(ON-1)(LOCATE FROM LDW280-23712-1)
-23712-1(ON-7) (A2) (A4)
280P17575-11(ON-9)
4(ON-9)
E
MS20470A 3(2)(ON-7)
(LOCATE FROM LDW280-23712-3)
LDW280-23712-1(ON-7) (A2) (A4)
LDW280P17575-11
(ON-9)
AN515-6R4(ON-9)
LDW280P17524-1
TAPE BOTH INSIDE
&OUTSIDE AS SHOWN(TYP)
(A4)
X196.00 (REF)
+Z27.00(REF)
(ZONE 3E SH 4) E
6
5
4
3
2

02/03 NAS 9-1100

LDW280-51659 SH 5

LDW280-51659 SH 5

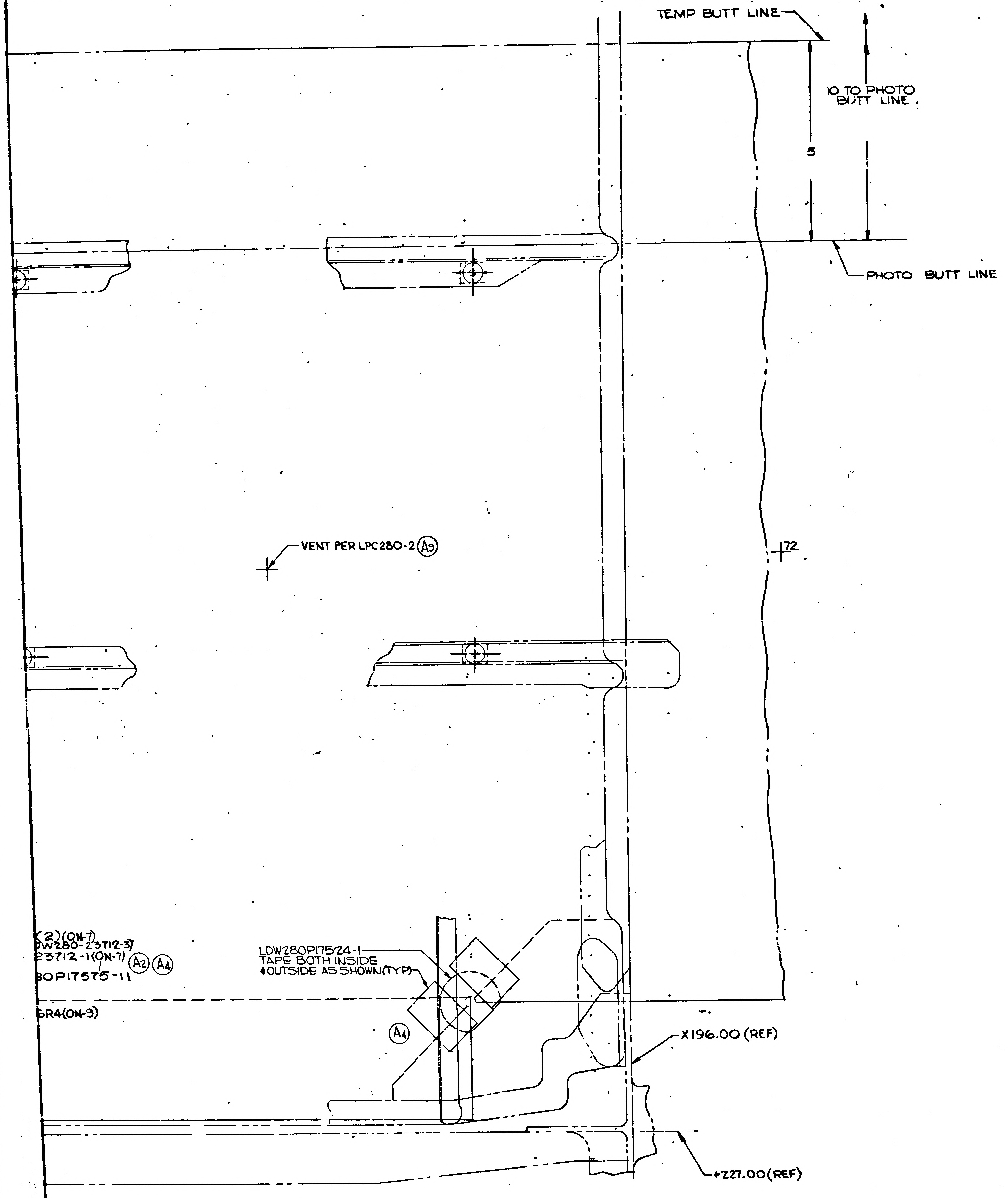
TEMP BUTT LINE
10 TO PHOTO BUTT LINE
5
PHOTO BUTT LINE
VENT PER LPC280-2 (A9)
72
(2)(ON-7)
DW280-23712-3
23712-1(ON-7) (A2) (A4)
30P17575-11
BR4(ON-9)
LDW280P17524-1
TAPE BOTH INSIDE
& OUTSIDE AS SHOWN(TYP)
(A4)
X196.00 (REF)
Z27.00(REF)
90
30

~~MANUFACTURING OPERATIONS~~
~~UNLESS OTHERWISE SPECIFIED~~
~~NOTES CHECKED ✓ APPLY TO THIS DWG.~~

~~PART NUMBER AND ALL OTHER MARKINGS IN REGION MARKED ⊠ USE BOTH SIDES IF NECESSARY.~~

~~FILLET AND INSIDE CORNER RADII TOLERANCES~~
~~.016R TO .062R ± .000~~
~~.063R TO .250R ± .005~~
~~OVER .250R ± .000~~

~~DEPTH SHOWN FOR TAPPED HOLES IS FULL THDS. 2-3 IMP THDS. BEYOND PERMISSIBLE.~~

~~EXTERNAL THREAD LENGTH SHOWN INCLUDES 2 IMPERFECT THREADS MAX.~~

~~DO NOT CADMIUM PLATE & PAINT HOLES OR SURFACES MARKED WITH DOUBLE ASTERISK.~~

~~MISMATCH STEP OF ± .005 PERMISSIBLE DUE TO CHANGE OF CUTTERS AT INSIDE INTERSECTING SURFACES.~~

~~DIAMETERS MARKED MUST BE CONCENTRIC WITHIN FULL INDICATOR READING~~

~~HOLES MUST BE KEPT FREE OF CHROME PLATING SOLUTION.~~

~~ALL DIMENSIONS SHOWN TO BE MET AFTER CADMIUM PLATING. THICKNESS OF PLATE .0003 MIN. TO .0005 MAX. MIN. THICKNESS TO BE .0002 ON THREADED AREAS. NO ALLOWANCE FOR PLATING IN HOLES~~

~~SURFACE ROUGHNESS INCLUDING REAMED HOLES PER MIL-STD-10~~

~~FOR ALL DRILLED HOLES~~

~~REMOVE ALL BURRS. BREAK ALL EDGES .005-.010~~

~~INSPECTION INFORMATION MINIMUM PERMISSIBLE AVERAGE EDGE DISTANCE MARKED IS~~

~~SYMBOL ƒ DENOTES SURFACE TO BE MACHINED~~

~~UNLESS OTHERWISE SPECIFIED TOLERANCE ON FLANGES IS ± 1/32~~

~~LENGTHS OF AN, NAS & MS AL ALY RIVETS SHORTER THAN 1 INCH ARE NOT SPECIFIED.~~

~~TOLERANCE ON LOFTED DELINEATIONS IS~~

27.75

PRINTING INFO ONLY
FULL SIZE SHEET AREA (36 X
1/2 SIZE SHEET AREA (1/4 OF FULL
DWG SIZE 36 X 10

PRINT TRIM LINE

03/03 NAS 9-1100

GRUMMAN AIRCRAFT ENGRG CORP., BETHPAGE, L. I., NEW YORK

MODEL OR END ITEM	SIZE	CODE IDENT NO.		
LM	J	26512	LDW280-51659	A
	SCALE FULL		SHEET 5.00	

LDW280-51659 SH 5

FOR PHOTO REPRODUCTION

THIS IS AN ORIGINAL DRAWING 3 FRAMES

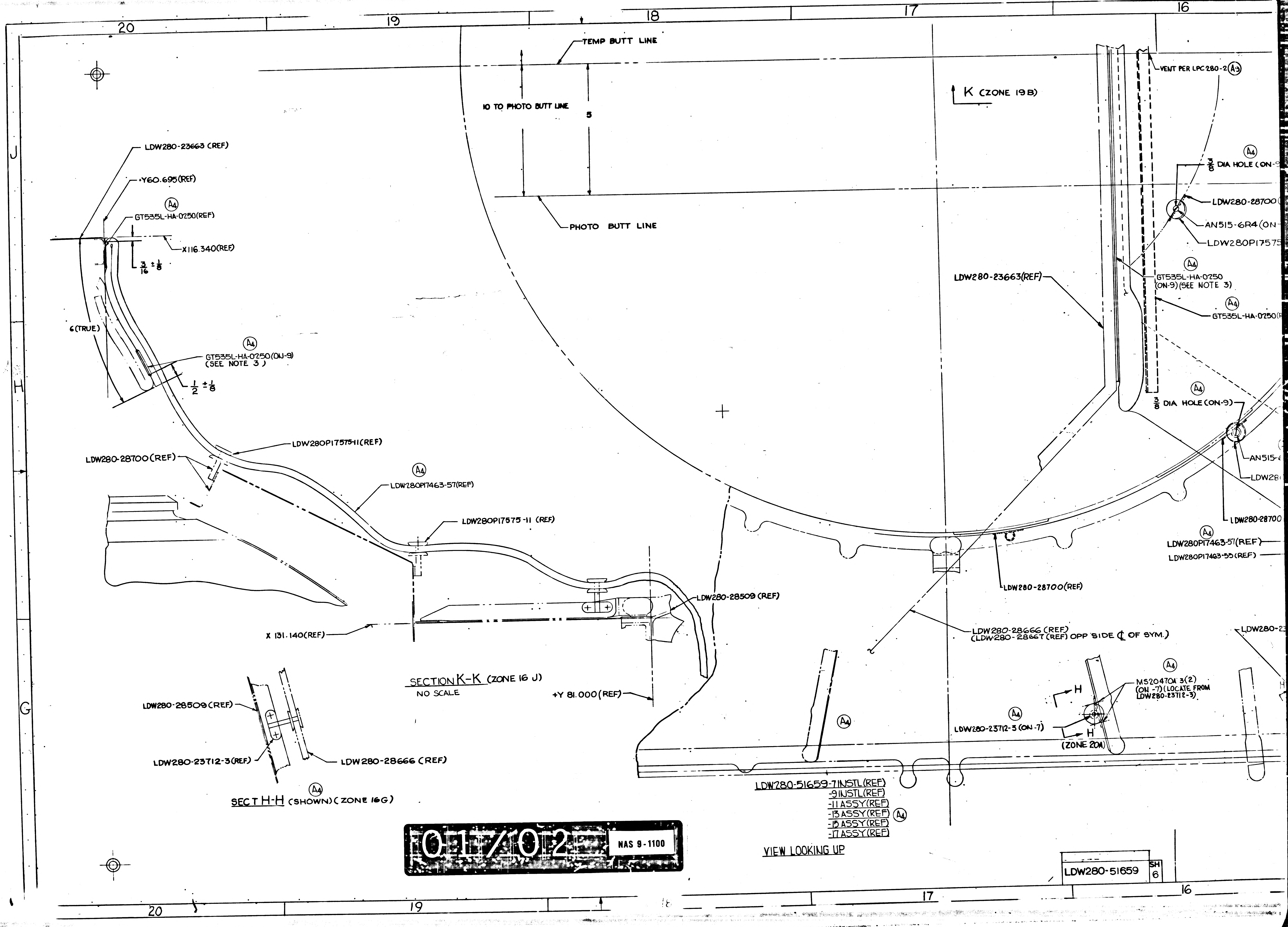
20
19
18
17
16
J
H
G
TEMP BUTT LINE
10 TO PHOTO BUTT LINE
5
PHOTO BUTT LINE
K (ZONE 19B)
VENT PER LPC280-2 (A3)
(A4)
3/8 DIA HOLE (ON-9
LDW280-28700
AN515-6R4 (ON-
LDW280P17575
LDW280-23663(REF)
(A4)
GT535L-HA-0250 (ON-9) (SEE NOTE 3)
(A4)
GT535L-HA-0250(
(A4)
3/8 DIA HOLE (ON-9)
AN515-
LDW28
LDW280-28700
(A4)
LDW280P17463-57(REF)
LDW280P17463-55(REF)
LDW280-28700(REF)
LDW280-28666 (REF)
(LDW280-28667 (REF) OPP SIDE ℄ OF SYM.)
LDW280-2
(A4)
MS20470A 3(2)
(ON -7) (LOCATE FROM LDW280-23712-3)
H
(A4)
LDW280-23712-3 (ON-7)
H
(ZONE 20H)
(A4)
LDW280-23663 (REF)
Y60.695(REF)
(A4)
GT535L-HA-0250(REF)
X116.340(REF)
3/16 ± 1/8
6 (TRUE)
(A4)
GT535L-HA-0250 (ON-9)
(SEE NOTE 3)
1/2 ± 1/8
LDW280P17575-11(REF)
LDW280-28700(REF)
(A4)
LDW280P17463-57(REF)
LDW280P17575-11 (REF)
LDW280-28509 (REF)
X 131.140(REF)
+Y 81.000(REF)
LDW280-28509(REF)
LDW280-23712-3(REF)
LDW280-28666 (REF)
(A4)
LDW280-51659-7 INSTL(REF)
-9 INSTL(REF)
-11 ASSY(REF)
-13 ASSY(REF)
-15 ASSY(REF)
-17 ASSY(REF)
(A4)

SECTION K-K (ZONE 16 J)
NO SCALE

SECT H-H (SHOWN) (ZONE 16G) (A4)

VIEW LOOKING UP

01/02 NAS 9-1100

LDW280-51659 SH 6

16
15
14
13
12
±Y0.000 (REF)
℄ SYM (EXCEPT AS NOTED)
MS20470A 3(2)(ON-7)
(LOCATE FROM LDW280-23712-3)
THIS SIDE ℄ SYM ONLY)
A4
TEMP BUTT LINE
VENT PER LPC280-2 A9
THIS SIDE ℄ SYM ONLY
LDW280-23712-3 (ON-7)
LDW280P17575-11 (ON-9)
AN515-6R4 (ON-9)
3/8 DIA HOLE (ON-11)
K
10 TO PHOTO BUTT LINE
5
70
30
3/8 DIA HOLE (ON-9)
LDW280-28700 (REF)
AN515-6R4 (ON-9)
LDW280P17575-11 (ON-9)
3/8 DIA HOLE (ON-9)
AN515-6R4 (ON-9)
LDW280P17575-11 (ON-9)
LDW280-25700 (REF)
PHOTO BUTT LINE
L
L (ZONE 12G)
GT535L-HA-0250 (ON-9) (SEE NOTE 3)
GT535L-HA-0250 (REF)
VENT PER LPC280-2 A9
LDW280P17575-11 (ON-9)
AN515-6R4 (ON-9)
LDW280-23712-3 (ON-7)
3/8 DIA HOLE (ON-11) OPP SIDE ℄ SYM ONLY
COORDINATE ALIGNMENT OF LDW280P17463-21 TO LDW280-28509.
36
MS20470AD3(2) (ON-7)(LOCATE FROM LDW280-23712-3)
3/8 DIA HOLE (ON-9)
AN515-6R4 (ON-9)
LDW280P17575-11 (ON-9)
LDW280-28700 (REF)
LDW280-23712-1 (REF)
LDW280P17575-11 (REF)
LDW280-28509 (REF)
LDW280P17463-57 (REF) A4
SECTION G-G (ZONE 15G)
NO SCALE
A8
G
LDW280P17463-57 (REF)
LDW280P17463-55 (REF)
MS20470A 3(2)(ON-7)
(LOCATE FROM LDW280-23712-3)
(REF)
LDW280-23712-3 (ON-7)
OPP SIDE ℄ OF SYM.)
LDW280-23712-3 (ON-7)
G (ZONE 13B)
MS20470A 3(2) (ON-7)(LOCATE FROM LDW280-23712-3)
MS20470A 3(2) (ON -7) (LOCATE FROM LDW280-23712-3)
H
H
NE 20A)
H
(ZONE 20A)
LDW280P17463-57 (REF)
LDW280-28509 (REF)
+Z27.000 (REF)
+Y81.000 (REF)
LDW280-28509 (REF)
+Y81.000 (REF)
LDW280-51659-17 (REF)
LDW280-51659-15 (REF)
LDW280-51659-13 (REF)
GB10J-1(17)(ON-11)
GW10H-1(17)(ON-11)
SEE NOTE 8
2 1/4 (TRUE)
+X131.140 (REF)
GT835P-8 (2'-4" LGTH, TAPE SPACED 4'-6")
SECTION L-L
(ZONE 14 J)
J
H
G
LDW280-51659A
LDW280-51659A
DWG SIZE 36 X 88
PRINTING INFO ONLY
FULL SIZE SHEET AREA (36 x 96) = 24, 6.0 SQ.FT.
PRINT TRIM LINE
W280-51659
SH 6
02/02
NAS 9-1100
DM580 51659 SH6.00
10.01
7.9

MANUFACTURING OPERATIONS
UNLESS OTHERWISE SPECIFIED
NOTES CHECKED ✓ APPLY TO THIS DWG.

PART NUMBER
AND ALL OTHER MARKINGS
IN REGION MARKED
USE BOTH SIDES IF NECESSARY.

FILLET AND INSIDE CORNER
RADII TOLERANCES
.015R TO .062R ± .010
.063R TO .250R ± .015
OVER .250R ± .030

DEPTH SHOWN FOR TAPPED HOLES IS FULL THDS. 2-3 IMP THDS. BEYOND PERMISSIBLE.

EXTERNAL THREAD LENGTH SHOWN INCLUDES 2 IMPERFECT THREADS MAX.

DO NOT CADMIUM PLATE & PAINT HOLES OR SURFACES MARKED WITH DOUBLE ASTERISK.

MISMATCH STEP OF ± .005 PERMISSIBLE DUE TO CHANGE OF CUTTERS AT INSIDE INTERSECTING SURFACES.

DIAMETERS MARKED
MUST BE CONCENTRIC WITHIN
FULL INDICATOR
READING

HOLES MUST BE KEPT FREE OF CHROME PLATING SOLUTION.

ALL DIMENSIONS SHOWN TO BE MET AFTER CADMIUM PLATING. THICKNESS OF PLATE .0003 MIN. TO .0005 MAX. MIN. THICKNESS TO BE .0002 ON THREADED AREAS. NO ALLOWANCE FOR PLATING IN HOLES

125 SURFACE ROUGHNESS INCLUDING REAMED HOLES PER MIL STD-10

200 FOR ALL DRILLED HOLES

REMOVE ALL BURRS.
BREAK ALL EDGES .015-.031

INSPECTION INFORMATION
MINIMUM PERMISSIBLE
AVERAGE EDGE-DISTANCE
MARKED IS

SYMBOL √ DENOTES SURFACE TO BE MACHINED

UNLESS OTHERWISE SPECIFIED TOLERANCE ON FLANGES IS ± 1/32

LENGTHS OF AN, NAS & MS AL ALY RIVETS SHORTER THAN 1 INCH ARE NOT SPECIFIED.

TOLERANCE ON LOFTED DELINEATIONS IS

GRUMMAN AIRCRAFT ENGRG CORP., BETHPAGE, L. I., NEW YORK

LM	SIZE J	CODE IDENT NO 26512	LDW280-51659	A
MODEL OR END ITEM	SCALE FULL		SHEET 6.00	

12 FOR PHOTO REPRODUCTION

THIS IS AN ORI... DRAWING 1/2 FRAME

ENG 32.1 REV 3-66

GRUMMAN AIRCRAFT ENGINEERING CORP.
CODE IDENT NO. 26512
ENGINEERING ORDER CMF 1

DWG. NO. LDW280-51659
EO NO. A4
CONTROL INFO NO. LDW280A-4311

ON-11 REMOVE LDW 280P17524-1

ON-9 LDW280P17964-3 WAS LDW280P17964-7 ; 3 PLCS.

THERMAL SHLD.

DETAIL SPEC REQ		CL II ENGRG CHG		CL I ENGRG CHG		2

REASON FOR EO	DESCRIPTION OF EO	GAEC EO RELEASE
TO MAKE DWG AGREE WITH TEMPLATE	ON-11 REMOVED LDW280P17524-1; ON-9 LDW280P17964-3 WAS LDW280P17964-7; 3PLCS	FR 12/13/6

MODEL	EFFECTIVITY		
	PROCURING ACTIVITY NO.	GAEC UNIT NO.	SUB CONTR UNIT NO.
LM		LM-1 (31)	

DRAWING CHANGE REQD		DISPOSITION OF PARTS		APPROVED BY									
✓		NOT	REQ'D	DATE	12/13/66	12/13			12/13/66	12/13/66		12/13	2-13-66
REVISE DWG	RECORD EO	REWORK	SCRAP	1	VDI	~~SUPPORT~~ THERM	RELIAB. GROUP		GROUP LEADER	STRESS GROUP	LIAISON ENGRG	PROJ ENGRG	GOVT

PRIORITY	DRAWING TITLE	DRAWING NO.	EO NO.
C	BLANKET INSTL D/S +Y THERMAL SHIELD	LDW280-51659	A4

ISSUED BY T. AMBROSIO/STRAKOSCH 1153 SECTION V. D. I. GROUP NO. 335 PL 35

01 NAS 9-1100

B

ENG 32.1 REV 3-65

GRUMMAN AIRCRAFT ENGINEERING CORP.
CODE IDENT NO. 26512 *
ENGINEERING ORDER

DWG. NO. LDW280-51659
EO NO. B1
CONTROL INFO NO. LDW280A5954

IN F/D & B/M FOR -17 ADD LDW280P17463-61 BLANKET ASSY AS SHOWN

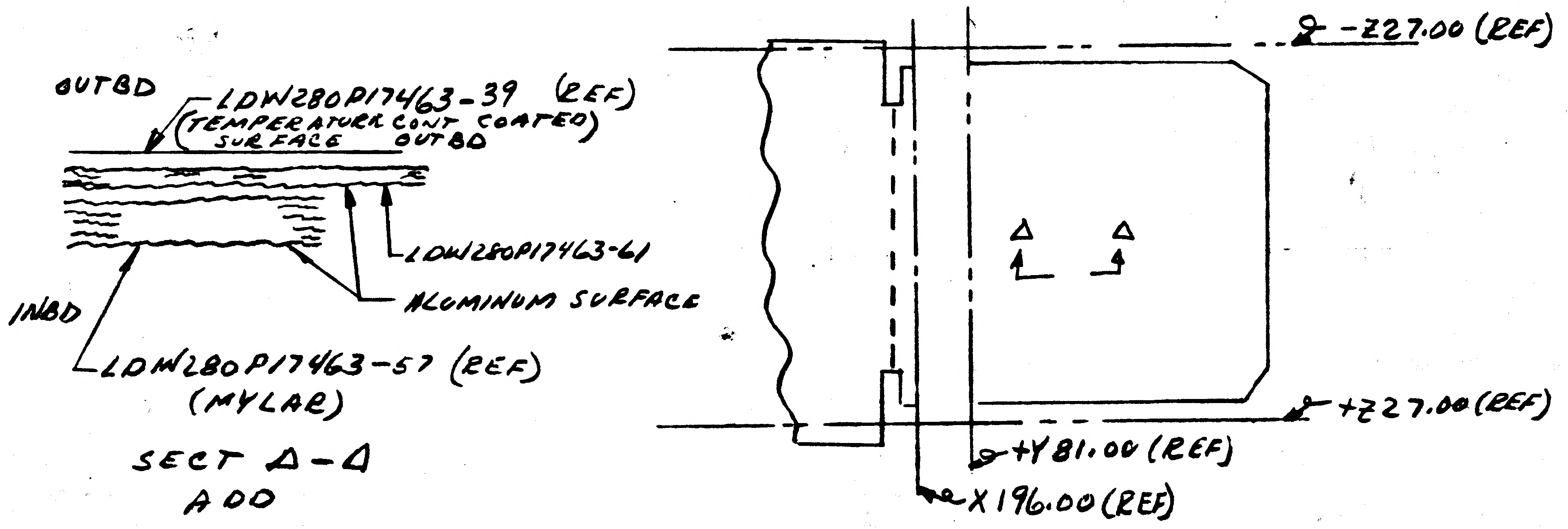
OUTBD
LDW280P17463-39 (REF) (TEMPERATURE CONT COATED) SURFACE OUTBD
LDW280P17463-61
ALUMINUM SURFACE
INBD
LDW280P17463-57 (REF) (MYLAR)
Δ
Δ
-Z27.00 (REF)
+Z27.00 (REF)
+Y81.00 (REF)
X196.00 (REF)

SECT Δ-Δ
ADD

* REWORK AS SHOWN   Δ NEXT AVAILIBLE LETTER

DETAIL SPEC REQ	☐	CL II ENGRG CHG	☑	CL I ENGRG CHG	☐	LCD19-1135

REASON FOR EO: ADDITIONAL THERMAL PROTECTION (LCE19-1135)

DESCRIPTION OF EO: IN F/D & B/M FOR -17 ADDED LDW280P17463-61

Ⓡ GAEC EO RELEASE: JK 3/23/7

MODEL	EFFECTIVITY		
	PROCURING ACTIVITY NO.	GAEC UNIT NO.	SUB CONTR UNIT NO.
LM		LM-1(31)	

DRAWING CHANGE REQD		DISPOSITION OF PARTS	
✓		*	
REVISE DWG	RECORD EO	REWORK	SCRAP

APPROVED BY								
DATE	3/16/67	3/21/67		3/16/67	3/20/67		3/21/67	3-23-67
5	VDI	THERMO SUPPORT	RELIAB. GROUP	GROUP LEADER	STRESS GROUP	LIAISON ENGRG	PROJ ENGRG	~~[illegible]~~

PRIORITY: C
DRAWING TITLE: BLANKET INSTL DESCENT STAGE +Y THERMAL SHIELD
DRAWING NO.: LDW280-51659
EO NO.: B1

ISSUED BY H. PALLMEYER / J. STRAKOSCH SECTION VEH DES INT GROUP NO. 335 PL 25

01

NAS 9-1100

ENG 32.2 REV 3-65

FITH

GRUMMAN AIRCRAFT ENGINEERING CORP.

CODE IDENT NO. 26512

ENGINEERING ORDER

DWG. NO. LDW280-51659
EO NO. B2
CONTROL INFO NO. LDW280A-6705

IN FLD & B/M
REMOVE {LDW280-23712-3 (5) {MS20470-A3(10)} FROM -7 ASSY.
ON -9 ASSY AN515-6R4 (16) WAS (25).
ON -9 ASSY ADD MS51957-30 (10)

ON-7:
REMOVE
GT535G-LAS-0004 (17)
TOP DECKS ONLY

ON-7 REMOVE
GT535G-LAS-0004(4)
TOP END OF
STRINGERS.

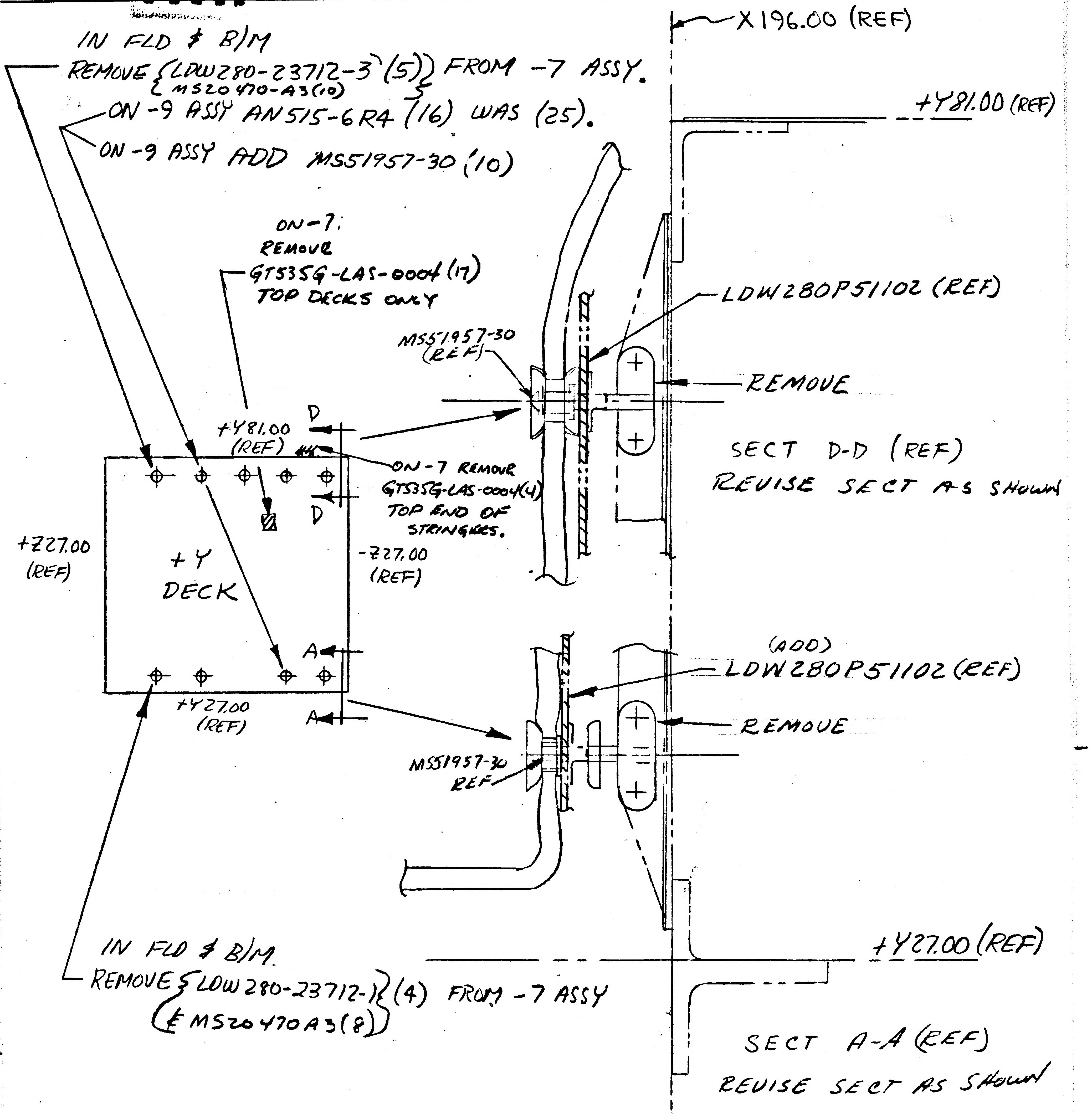
X196.00 (REF)
+Y81.00 (REF)
LDW280P51102 (REF)
MS51957-30 (REF)
REMOVE
+Y81.00 (REF)
D
D
SECT D-D (REF)
REVISE SECT AS SHOWN
+Z27.00 (REF)
+Y DECK
-Z27.00 (REF)
A
A
+Y27.00 (REF)
(ADD)
LDW280P51102 (REF)
REMOVE
MS51957-30 REF
+Y27.00 (REF)
SECT A-A (REF)
REVISE SECT AS SHOWN

IN FLD & B/M
REMOVE {LDW280-23712-1 (4) (& MS20470A3(8))} FROM -7 ASSY

IN B/M FOR -7
LDW280-23712-1 (9) WAS (13)
LDW280-23712-3 (7) WAS (12)

NOTE (DO NOT INCORPORATE ON DWG): EXTRANEOUS HOLES MAY BE LEFT OPEN.

DETAIL SPEC REQ	☐	CL II ENGRG CHG	☑	CL I ENGRG CHG	☐

LCD-1244 5

REASON FOR EO	DESCRIPTION OF EO	GAEC EO RELEASE
TO PROVIDE FOR FITH SHIELD	ON-7 REMOVED LDW280-23712-3(5), LDW280-23712-1(4) MS20470A3(18), GT535G-LAS-0004(21). ON-9 AN515-6R4 (16) WAS (25)	C JK 5/2/7

MODEL	PROCURING ACTIVITY NO.	GAEC UNIT NO.	SUB CONTR UNIT NO.
LM		LM-1 (31)	

DRAWING CHANGE REQD		DISPOSITION OF PARTS	
REVISE DWG	RECORD EO	REWORK	SCRAP
✓		✓	✓

APPROVED BY									
DATE	5/2/67	5/2/67			5/2/67	5/2/67		5/2/67	5-2-67
5	VDZ	SUPPORT THERMAL	RELIAB. GROUP		GROUP LEADER	STRESS GROUP	LIAISON ENGRG	PROJ ENGRG	

PRIORITY C

DRAWING TITLE: BLANKET INSTL - D.S. +Y THERMAL SHIELD

DRAWING NO. LDW280-51659

EO NO. B2

ISSUED BY AP E. FRANK / J. STRAKOSH SECTION VDZ GROUP NO. 735 PL 25

01

NAS 9-1100

ENG 32.1 REV 3-65

B

GRUMMAN AIRCRAFT ENGINEERING CORP.
CODE IDENT NO. 26512
ENGINEERING ORDER

DWG. NO. LDW280-51659
EO NO. B3
CONTROL INFO NO. LMS-15104

THIS IS A REVISION OF EO B2

IN F/D OF EO B2
REMOVE LDW 280-23712-1 (4) FROM -7 ASSY
& MS20470A3 (8)

SHOULD BE
REMOVE LDW 280-23712-1 (5) FROM -7 ASSY
& MS20470A3 (10)

RELEASED BY LIAISON

DETAIL SPEC REQ	☐	CL II ENGRG CHG	☑	CL I ENGRG CHG	☐

REASON FOR EO: ADDITIONAL STANDOFF SHOULD BE REMOVED

DESCRIPTION OF EO: REF EO B2
ON -7 "REMOVED LDW 280-23712-1 (5) AND MS20470A3 (10)
WAS REMOVED LDW 280-23712-1 (4) AND MS20470A3 (8)

GAEC EO RELEASE: 5 C JK 31 55 025

MODEL	PROCURING ACTIVITY NO.	GAEC UNIT NO.	SUB CONTR UNIT NO.
LM		LM-1 (3)	

DRAWING CHANGE REQD: REVISE DWG ✓ RECORD EO
DISPOSITION OF PARTS: REWORK ✓ SCRAP

		SUPPORT	RELIAB. GROUP	GROUP LEADER	STRESS GROUP	LIAISON ENGRG	PROJ ENGRG	~~GOVT~~
APPROVED BY				~	DV		DAM	
DATE	7/6/67			~	5/12	5-12-67	5-16-67	12/67
5	VDI							

PRIORITY: C
DRAWING TITLE: BLANKET INSTL D.S + Y THERMAL SHIELD
DRAWING NO.: LDW 280-51659
EO NO.: B3

ISSUED BY LIAISON J. GRASSIANO X6216 SECTION VDI GROUP NO. 280 PL 25

01 NAS 9-1100

ENG 32.1 REV 3-65 **L M**

GRUMMAN AIRCRAFT ENGINEERING CORP.
CODE IDENT NO. 26512
ENGINEERING ORDER

DWG. NO. LDW280-51659 | EO NO. B4

CONTROL INFO NO. LDW280A 8145

FOR -9 BLANKET INSTL ADD LDW280P18339-9 BLANKET ASSY
& LDW280P18339-23 TAPE ASSY

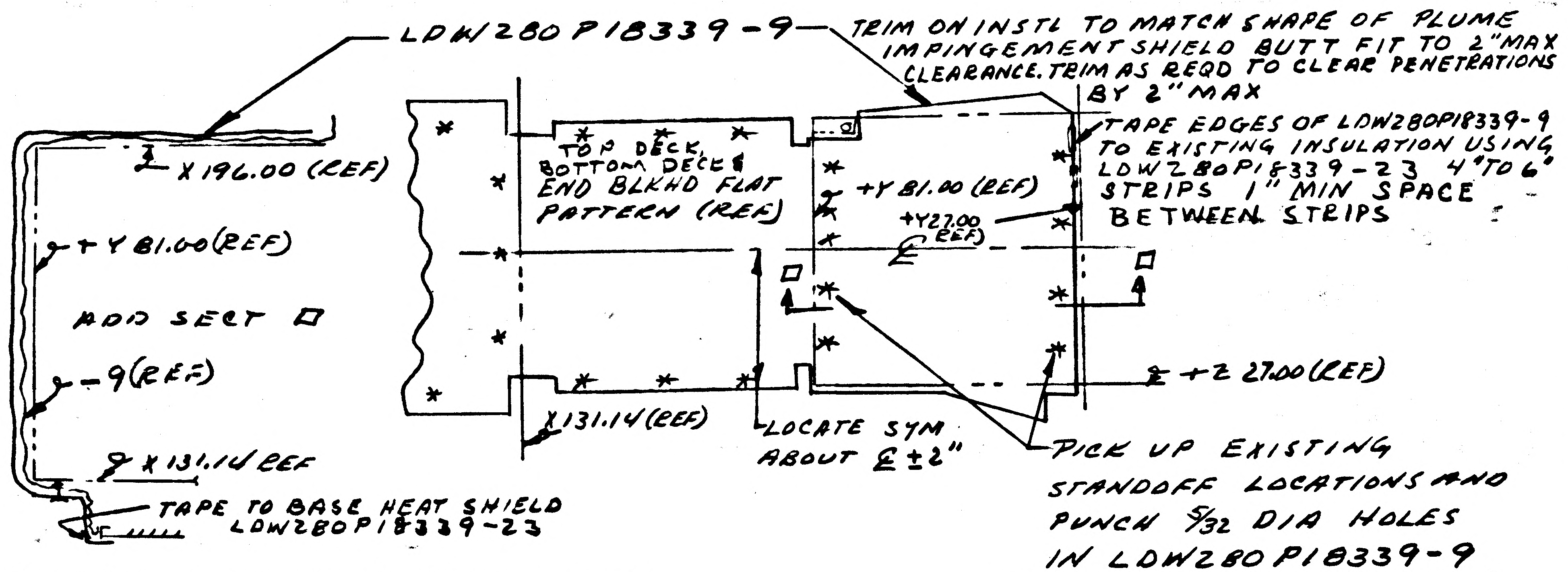
LDW280P18339-9
TRIM ON INSTL TO MATCH SHAPE OF PLUME IMPINGEMENT SHIELD BUTT FIT TO 2" MAX CLEARANCE. TRIM AS REQD TO CLEAR PENETRATIONS BY 2" MAX
TAPE EDGES OF LDW280P18339-9 TO EXISTING INSULATION USING LDW280P18339-23 4" TO 6" STRIPS 1" MIN SPACE BETWEEN STRIPS
X 196.00 (REF)
+Y 81.00 (REF)
ADD SECT □
-9 (REF)
X 131.14 REF
TAPE TO BASE HEAT SHIELD LDW280P18339-23
TOP DECK, BOTTOM DECK & END BLKHD FLAT PATTERN (REF)
+Y 81.00 (REF)
+Y 27.00 (REF)
℄
□
□
+Z 27.00 (REF)
X 131.14 (REF)
LOCATE SYM ABOUT ℄ ± 2"
PICK UP EXISTING STANDOFF LOCATIONS AND PUNCH 5/32 DIA HOLES IN LDW280P18339-9 INSTALL WITH EXISTING HDW

□ = NEXT AVAILIBLE SECT LETTER

DETAIL SPEC REQ		CL II ENGRG CHG		CL I ENGRG CHG	✓	LCD-1847

REASON FOR EO	DESCRIPTION OF EO	Ⓡ GAEC EO RELEASE
ADDITIONAL THERMAL PROTECTION	FOR -9 ADDED LDW280P18339-9 & -23 ADDED SECT □	JK 8/1/67

MODEL	~~PROCURING ACTIVITY NO.~~ EI.	GAEC UNIT NO.	SUB CONTR UNIT NO.
LM	LFM-26	LM-1(31)	

DRAWING CHANGE REQD		DISPOSITION OF PARTS									
✓		-9		DATE	7/31/67		7/31/67	7/31/67	7/31/67	7/31	8-1-67
REVISE DWG	RECORD EO	REWORK	SCRAP	APPROVED BY	VDI	SUPPORT	~~RELIAB~~ GROUP	GROUP LEADER	STRESS GROUP	LIAISON ENGRG	PROJ ENGRG

PRIORITY	DRAWING TITLE	DRAWING NO.	EO NO.
C	BLANKET INSTL - D.S. +Y THERMAL SHIELD	LDW280-51659	B4

ISSUED BY H. PALLMEYER / J. STRAKOSCH SECTION VEH DES INT GROUP NO. 335 PL 25

01

NAS 9-1100

LFM

ENG 33.1 REV 3-65

GRUMMAN AIRCRAFT ENGINEERING CORP.
CODE IDENT NO. 26512

ENGINEERING ORDER

DWG. NO. LDW280-51659
EO NO. B5
CONTROL INFO NO. LDW280A 8722

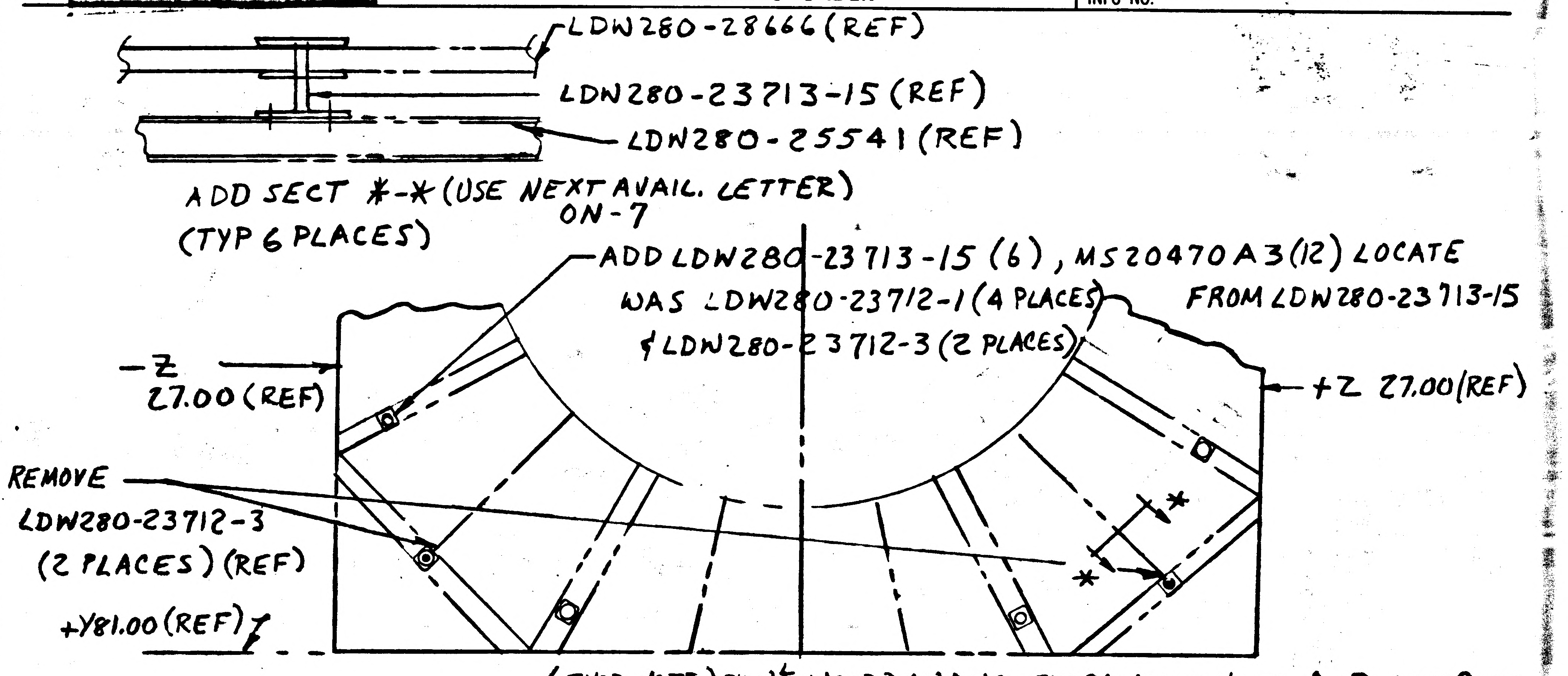
LDW280-28666 (REF)
LDW280-23713-15 (REF)
LDW280-25541 (REF)
ADD SECT *-* (USE NEXT AVAIL. LETTER)
(TYP 6 PLACES)
ON-7
ADD LDW280-23713-15 (6), MS20470A3(12) LOCATE FROM LDW280-23713-15
WAS LDW280-23712-1 (4 PLACES) & LDW280-23712-3 (2 PLACES)
-Z 27.00 (REF)
+Z 27.00 (REF)
REMOVE LDW280-23712-3 (2 PLACES) (REF)
+Y81.00 (REF)
*
*

(SHOP NOTE) DON'T INCORP ON DWG. - EXTRANEOUS HOLE MAY BE LEFT OPEN.

DETAIL SPEC REQ		CL II ENGRG CHG	✓	CL I ENGRG CHG	✓ LCD 2020

REASON FOR EO: REINFORCEMENT OF +Y LOWER DECK

DESCRIPTION OF EO: ON-7: ADDED SECT *-*
ADDED LDW280-23713-15 (6), MS20470A3(12)
REMOVED LDW280-23712-1 (4), -3 (2), MS20470A3(12)

GAEC EO RELEASE: JK 8/17/67 C

MODEL	EFFECTIVITY ~~PROCURING ACTIVITY NO~~ E.I.	GAEC UNIT NO.	SUB CONTR UNIT NO.
LM	LFM 43	LM 1 (31)	

DRAWING CHANGE REQD		DISPOSITION OF PARTS	
REVISE DWG	RECORD EO	REWORK	SCRAP
✓		✓	

APPROVED BY	JaP			—	NM	RLT for HEG / PROJ KSC	E J	Botts
DATE	8/15/67			—	8-15-67		8/15/67	8-17-67
	VDI	SUPPORT	RELIAB. GROUP	GROUP LEADER	STRESS GROUP	~~DESIGN~~ ENGRG	PROJ ENGRG	~~[illegible]~~

PRIORITY	DRAWING TITLE	DRAWING NO.	EO NO.
C	BLANKET INSTL D/S - +Y THERMAL SHIELD	LDW280-51659	B5

8-18
ISSUED BY DON RAGAS X1153 SECTION VDI GROUP NO. 335 PL 25

01 ✓ NAS 9-1100

ENG 32.1 REV 3-65

GRUMMAN AIRCRAFT ENGINEERING CORP.
CODE IDENT NO. 26512
ENGINEERING ORDER

*

DWG. NO. LDW280-51659
EO NO. B6
CONTROL INFO NO. LDW280A-8856

LFM

THIS IS A REV. OF EO B5
REVISE CALLOUT:
LDW280-23712-1 (4 PLACES)
LDW280-23712-3 (2 PLACES) S/B LDW280-23712-3 (6 PLACES)

IN SECT G-G - LDW280-23712-3 (REF) WAS LDW280-23712-1 (REF)

IN B/M FOR -7
LDW280-23712-3 (3) REQD WAS (7) REQD

DETAIL SPEC REQ	☐	CL II ENGRG CHG	☐	CL I ENGRG CHG	☑ LCD-2020

3

REASON FOR EO: INCORRECT PART NO. CALLOUT ON EO B5

DESCRIPTION OF EO: REF EO B5 - REVISED CALLOUT: LDW280-23712 (4) & LDW280-23713 (2) S/B LDW280-23713-3 (6), IN SECT G-G - LDW280-23712-3 (REF) WAS -1 (REF), IN B/M FOR-7 LDW280-23712-3 (3 REQD WAS 7 REQD)

GAEC EO RELEASE: C JK 8/22/67

MODEL	EFFECTIVITY ~~PROCURING ACTIVITY NO~~ EI	GAEC UNIT NO.	SUB CONTR UNIT NO.
LM	LFM 43	LM 1 (31)	

DRAWING CHANGE REQD: REVISE DWG ✓ RECORD EO
DISPOSITION OF PARTS: REWORK ✓ SCRAP

APPROVED BY					NM	RLT FOR HEG		Bott
DATE	8/21/67				8-21-67	PROJ KSC	8/21	8-22-67
	VDI	SUPPORT	RELIAB. GROUP	GROUP LEADER	STRESS GROUP	~~DESIGN~~ ENGRG	PROJ ENGRG	~~GOVT~~

PRIORITY: C
DRAWING TITLE: BLANKET INSTL D/S: +Y THERMAL SHIELD
DRAWING NO.: LDW280-51659
EO NO.: B6

8/21
ISSUED BY DON RAGAS X1153 SECTION VDI GROUP NO. 335 PL 5

01

NAS 9-1100

ENG 32.1 REV 3-63

GRUMMAN AIRCRAFT ENGINEERING CORP.
CODE IDENT NO. 26512
ENGINEERING ORDER

DWG. NO. LDW280-51664
EO NO. A1
CONTROL INFO NO. LDW280-9009

CREATE LDW280-51664-1 IDENTICAL TO LDW280-28664-1 NO CHANGE EXCEPT LDW280P17512-3 REPLACES LDW280P17512-1

LDW280-51664-1	LDW280-51553	LEM-1 (31)	1 REQ
	LDW280-52553	LEM-2 (32) & LEM-3 (33)	1 ea REQ

* DRAWING NOT MADE

DETAIL SPEC REQ ☐ CL II ENGRG CHG ☐ CL I ENGRG CHG ☐

REASON FOR EO
TO ACCOMMODATE INSTALLATION OF THERMAL SHIELDING

DESCRIPTION OF EO
E.O. A1 INITIAL DRAWING RELEASE
PARTS MADE FROM E.O.

GAEC EO RELEASE C
XCE 8-31

MODEL	PROCURING ACTIVITY NO.	GAEC UNIT NO.	SUB CONTR UNIT NO.
LEM		LEM-1(31)	
LEM		LEM-2(32)	
LEM		LEM-3(33)	

DRAWING CHANGE REQD: REVISE DWG * / RECORD EO
DISPOSITION OF PARTS: NOT REQ'D (REWORK / SCRAP)

APPROVED BY	JJB	ALR	~		WJH		RMC	DC
DATE	7/27/66	8-6	~		7/25/66		8-8	8-2-66
7/26/66	VDI	~~SUPPORT~~ WT	RELIAB. GROUP	GROUP LEADER	STRESS GROUP	LIAISON ENGRG	PROJ ENGRG	~~GOVT~~

PRIORITY C
DRAWING TITLE SHIELD INSTL DESCENT STAGE QUAD I FIXED THERMAL
DRAWING NO. LDW280-51664
EO NO. A1

ISSUED BY H. PALLMEYER / J. STRAKOSCH SECTION VEH DES INT GROUP NO. 335 PL 35

CANCELLED

BY DCRF No. 323-1257
DATE 11-9-66

REPLACED BY LDW280-28664

LE(001)
MP-14

INITIAL DRAWING RELEASE: EO A, DRAWING NOT MADE

2

Release
11-18-66

11-16-66

11/17/66

GRUMMAN AIRCRAFT ENGRG CORP.
BETHPAGE, L. I., N. Y.

SHIELD INSTL ~ DS ~ QUAD I ~
FIXED THERMAL

SIZE A
CODE IDENT. NO. 26512
LDW280-51664 B
SCALE NONE
SHEET

ENG 163A REV. 5-64

01

NAS 9-1100

ENG 32.1 REV 3-65

GRUMMAN AIRCRAFT ENGINEERING CORP.
CODE IDENT NO. 26512
ENGINEERING ORDER

DWG. NO. LDW280-51665
EO NO. A1
CONTROL INFO NO. LDW280-9025

CREATE LDW280-51665-1 IDENTICAL TO LDW280-28665-1 NO CHANGE

EXCEPT LDW280P17582-3 REPLACES LDW280P17582-1
LDW280P17584-3 REPLACES LDW280P17584-1

LDW280-51665-1 N/A LDW280-51553 LEM-1(31) 1 REQ/MOD.

* DRAWING NOT MADE

2

DETAIL SPEC REQ ☐ CL II ENGRG CHG ☐ CL I ENGRG CHG ☐

REASON FOR EO: TO ACCOMMODATE INSTALLATION OF THERMAL SHIELDING

DESCRIPTION OF EO: EO A1 INITIAL DRAWING RELEASE
PARTS MADE FROM E.O.

GAEC EO RELEASE: KLE 8-3-66

MODEL	PROCURING ACTIVITY NO.	GAEC UNIT NO.	SUB CONTR UNIT NO.
LEM		LEM-1(31)	

DRAWING CHANGE REQD: * REVISE DWG
DISPOSITION OF PARTS: NOT REQD

APPROVED BY	JJS	ADM	—		WJH		RMC (EV)	AC
DATE	7/27/66	8-6	—		7/25/66		8-8	8-2-66
7/27/66	VD1	~~SUPPORT~~	RELIAB. GROUP	GROUP LEADER	STRESS GROUP	LIAISON ENGRG	PROJ ENGRG	~~CONT~~

PRIORITY: C
DRAWING TITLE: DESCENT STAGE FIELD INSTL QUAD II FIXED THERMAL
DRAWING NO.: LDW280-51665
EO NO.: A1

ISSUED BY H. PULLMEYER / J. STRAKOS
SECTION VEH DES INT
GROUP NO. 335 PL 35

CANCELLED

BY DCRF No. 323-1257
DATE 11-9-66

REPLACED BY LDW280-28665

VE(001)
MP-14

INITIAL DRAWING RELEASE: EO A, DRAWING NOT MADE

2

JAS
11/12/66

Released
JRF 11/18/66

(WR) 11-16

® GRUMMAN AIRCRAFT ENGRG CORP. BETHPAGE, L. I., N. Y.			c
SHIELD INSTL~DS ~ QUAD II FIXED THERMAL			
SIZE A	CODE IDENT. NO. 26512	LDW280-51665	B
SCALE NONE		SHEET	

ENG 163A REV. 5-64

01

NAS 9-1100

ENG 32.1 REV 3-65

GRUMMAN AIRCRAFT ENGINEERING CORP.
CODE IDENT NO. 26512
ENGINEERING ORDER

DWG. NO. LDW280-51667
EO NO. A1
CONTROL INFO NO. LDW 280-9013

CREATE LDW 280-51667-1 IDENTICAL TO LDW280-28667-1 NO CHANGE

EXCEPT: LDW 280P17477-3 REPLACES LDW280P17477-1
LDW 280 P17478-1 REPLACES LDW280P17478-3

				NO. REQ/MOD
LDW 280-51667-1	N/A	LDW280-51553	LEM-1(31)	1
		LDW 280-52553	LEM-2(32) LEM-3(33)	1

"CANCELLED"
REFERENCE DCRF #323-1257
11-9-66

* DRAWING NOT MADE

DETAIL SPEC REQ ☐ CL II ENGRG CHG ☐ CL I ENGRG CHG ☐

REASON FOR EO: TO ACCOMMODATE INSTALLATION OF THERMAL SHIELDING

DESCRIPTION OF EO: EO A1 INITIAL DRAWING RELEASE PARTS MADE FROM E.O.

GAEC C EO RELEASE: XLE 8-3-6

MODEL	PROCURING ACTIVITY NO.	GAEC UNIT NO.	SUB CONTR UNIT NO.
LEM		LEM-1(31)	LEM-2(32)
LEM		LEM-3(33)	

DRAWING CHANGE REQD		DISPOSITION OF PARTS										
		NOT REQ'D		APPROVED BY	JHB	AWR	~		JH		RMC EO	JC
*				DATE	7/27/66	8-2	—		7/26/66		8-8	8-2-66
REVISE DWG	RECORD EO	REWORK	SCRAP	7/26/66	VDE		RELIAB. GROUP	GROUP LEADER	STRESS GROUP	LIAISON ENGRG	PROJ ENGRG	

PRIORITY: C
DRAWING TITLE: SHIELD INSTL DESCENT STAGE QUAD II FIXED-THERMAL
DRAWING NO.: LDW280-51667
EO NO.: A1

ISSUED BY H. PALLMEYER / J. STRAKOSCH SECTION VEH DES INT GROUP NO. 335 PL 35

01 NAS 9-1100

ENG 32.1 REV 3-65

GRUMMAN AIRCRAFT ENGINEERING CORP.
CODE IDENT NO. 26512
ENGINEERING ORDER

DWG. NO. LDW280-51667
EO NO. A2
CONTROL INFO NO. LDW 280- 9506

IN B/M & F/D LDW280-28754-3 WAS -1
FOR LDW280-51667-1 INST'L.

(3)

DETAIL SPEC REQ		CL II ENGRG CHG		CL I ENGRG CHG	

REASON FOR EO: ADDITIONAL REQUIREMENT

DESCRIPTION OF EO: ON-1 INSTL. ADDED LDW280-28754-3 & REMOVED LDW280-28754-1

GAEC EO RELEASE: UE 8-23

MODEL	EFFECTIVITY: PROCURING ACTIVITY NO.	GAEC UNIT NO.	SUB CONTR UNIT NO.
LEM		LEM-1 (31)	
LEM		LEM-2 (32)	
LEM		LEM-3 (33	

DRAWING CHANGE REQD: ✓ REVISE DWG; RECORD EO

DISPOSITION OF PARTS: NOT REWORK; REQD SCRAP

APPROVED BY	JWS				WS		RMC(W)	CW
DATE	8/15/66				8/15/66		8-W	8/16/66
	VD1	SUPPORT	RELIAB. GROUP	GROUP LEADER	STRESS GROUP	LIAISON ENGRG	PROJ ENGRG	CONT

PRIORITY: C

DRAWING TITLE: SHIELD INST'L D/S QUAD IV FIXED - THERMAL

DRAWING NO.: LDW 280-51667

EO NO.: A2

ISSUED BY J Backofen X 1153 SECTION Veh Des Int GROUP NO. 335 PL 33

CANCELLED

BY DCRF No. 323-1257
DATE 11-9-66

REPLACED BY LDW280-28667

LE(001)
MP-14

* DWG NOT MADE
CREATED BY EO A1

JAS
11/12/66

2

RMCo[illegible] LR
11-16-66

RELEASE Bott 11-18-66
FR 11/18/6

GRUMMAN AIRCRAFT ENGRG CORP. BETHPAGE, L. I., N. Y.			C
SHIELD INSTL ~ D. S. ~ QUAD II FIXED THERMAL.			
SIZE A	CODE IDENT. NO. 26512	LDW280-51667	B
SCALE NONE		SHEET	

ENG 163A REV. 5-64

01 NAS 9-1100

CANCELLED

BY DCRF No. 323-1310
DATE 14 Nov. 1966

EO CREATED DWG
DWG NOT MADE
REPLACED BY LDW280-51589

Release
J Tagliani
11/22/66
G(00) MP-14

2

GP LEADER	J. Pusateri 11/17/66
PROJECT	R.M. Carbee (AR) 11-17-66

® GRUMMAN AIRCRAFT ENGRG CORP. BETHPAGE, L. I., N. Y.		
SHIELD INSTL DESCENT STAGE - QUAD IV OXIDIZER FILL & DRAIN		
SIZE A	CODE IDENT. NO. 26512	LDW280-51670 B
SCALE		SHEET

ENG 163A REV. 5-64

01 NAS 9-1100

LDW280-51671 A

MODEL OR END ITEM	NEXT ASSY	MODULE OR SER NO.	REQD PER MODULE OR END ITEM
LM	LDW280-54553	-15(45)	1
		-14(44)	1
		-13(43)	1
		-12(42)	1
		-11(41)	1
		-10(40)	1
		-9(39)	1
		-8(38)	1
		-7(37)	1
		-6(36)	1
		5(35)	1
	LDW280-54553	4(34)	1
	LDW280-52553	3(33)	1
	LDW280-52553	2(32)	1
LM	LDW280-51553	LM-1(31)	1

PART NO. LDW280-51671-3 & -5 GAEC SCH NO. 52

2

SH REV STATUS: FOR DESCRIPTION OF REV SEE SUBQ SH

SHEET	1.00	1.10	2.00	3.00
REV	A	A	A	A

LAST SECT LTR USED: H

LAST DASH NO. USED: -5

GRUMMAN REL INFO A

PRIM NO. VE(001) 207 MP-14 11-21-6

UNLESS OTHERWISE SPECIFIED DIMENSIONS ARE IN INCHES.
TOLERANCE UNLESS SPECIFIED
FRACTIONS - DECIMALS — ANGLES
± 1/4 ± .030 ± 1/2°
ORIG DWG AUTH
DETAIL SPEC REQUIREMENT
CLASS II ENGRG CHANGE
CLASS I ENGRG CHANGE

CONTRACT NO. NAS9-1100
LINE ITEM # 1
DOCUMENTATION TYPE II

DRAWN BY	J. Backstein 9/2/66	RELIABILITY	
LAYOUT BY		THERMO	for M Sloan 11/
CHECKED BY			
GR LEADER	8/2/66		
VEH DES I	8/2/66		
STRUCT.	WB 8/6/66	PROJ ENGR	R. M. Carbee (EU) 8/7
STRUCT.	Hilderman 8/6	REL GROUP	GBA
WEIGHTS			

GRUMMAN AIRCRAFT ENGRG CORP
BETHPAGE, L. I., NEW YORK

SHIELD INST'L - D/S QUAD
GUILLOTINE ACCESS COVER
THERMAL

SIZE B CODE IDENT NO. 26512 LDW280-51671 A

SCALE NONE SHEET 1.00 OF 4

ENG 77.1 12-65

01 NAS 9-1100

REVISIONS FOR CONTINUATION OF REVISIONS SEE SHEET ________

CHANGE LTR	ITEM NO.	SHEET NO.	ZONE	GRUMMAN INFO ONLY	DET SPEC	CLASS I	CLASS II	ENGRG ORDER	DESCRIPTION	EFFECTIVITY	DISPOSITION OF EXISTING PARTS REWORK	DISPOSITION OF EXISTING PARTS SCRAP	CHANGED BY AND DATE	ENGRG APPD	~~GOVT~~ APPD
		3.00							RETRACED NC SH 3.00 LAST REV. NO CHANGE.	NOT REQ'D	NOT	REQ'D	J. BACKOFEN 10/14/66	11-15-66	11/16/66
A	1	3.00 2.00 1.00							REMOVED: -1, NOTES 1 & 2, SECT'S A-A, B-B, DETAILS C, D, E, F. ADDED: -3, -5, NOTES 3 & 4 SECT'S G-G, H-H.	LM-1 (31) THRU LM-15 (45)		✓			
	2	1.10 1.00						®	ADDED SH. 1.10. SHEET 1 OF 4 WAS 1 OF 3.	NOT REQ'D	NOT	REQ'D			

CHG APPROVED

LTR	~~GROUP ENGR~~	VEH DES I	STRUCT	STRUCT	WEIGHTS	RELIABILITY	THERMO
A		JLS 11/8/66	11/15				

GRUMMAN AIRCRAFT ENGRG CORP., BETHPAGE, L. I., NEW YORK

SIZE	CODE IDENT NO.		
B	26512	LDW280-51671	A

SCALE NONE SHEET 1.10

ENG 77.16 3-66

01

NAS 9-1100

C.L.					-5	-3	CODE IDENT	PART NO.	I&T	NOMENCLATURE OR DESCRIPTION	MATERIAL	GOVT SPEC	COML SPEC	STOCK SIZE	PROCESS SYM	FINISH NO.	ZONE
					14	10		GW10H-3	E	WASHER	STD. PART						
					14	10		GR11B-1		RETAINER	STD. PART						
					AS REQ'D			GT535B-2-100		TAPE (MYLAR)	GRUMMAN STD						
						1		LDW280-51831-1		SHIELD	SEE DWG						
					AS REQ'D			LDW280P17590-11		TAPE (POLYIMIDE)	SEE DWG						
					1			LDW280P17586-33		BLANKET ASSY	SEE DWG						
C								LDW280-51671-5	I	SHIELD ASS'Y							
C								LDW280-51671-3	E	SHIELD INST'L					NONE	NONE	

QTY PER ASSEMBLY

C.L. - CLEANLINESS LEVEL PER LSP14-0011

SYM OR NO.	PROCESS OR FINISH	GRUMMAN SPEC OR MILITARY SPEC	SYM OR NO.	PROCESS OR FINISH	GRUMMAN SPEC OR MILITARY SPEC	SYM OR NO.	PROCESS OR FINISH	GRUMMAN SPEC OR MILITARY SPEC

I&T: IDENTIFICATION AND TRACEABILITY IN ACCORDANCE WITH : NONE

GRUMMAN AIRCRAFT ENGRG CORP, BETHPAGE, L. I., NEW YORK

SIZE	CODE IDENT NO.		
B	26512	LDW280-51671	A
SCALE NONE		SHEET 2 00	

ENG 77.2 7-65

01 NAS 9-1100

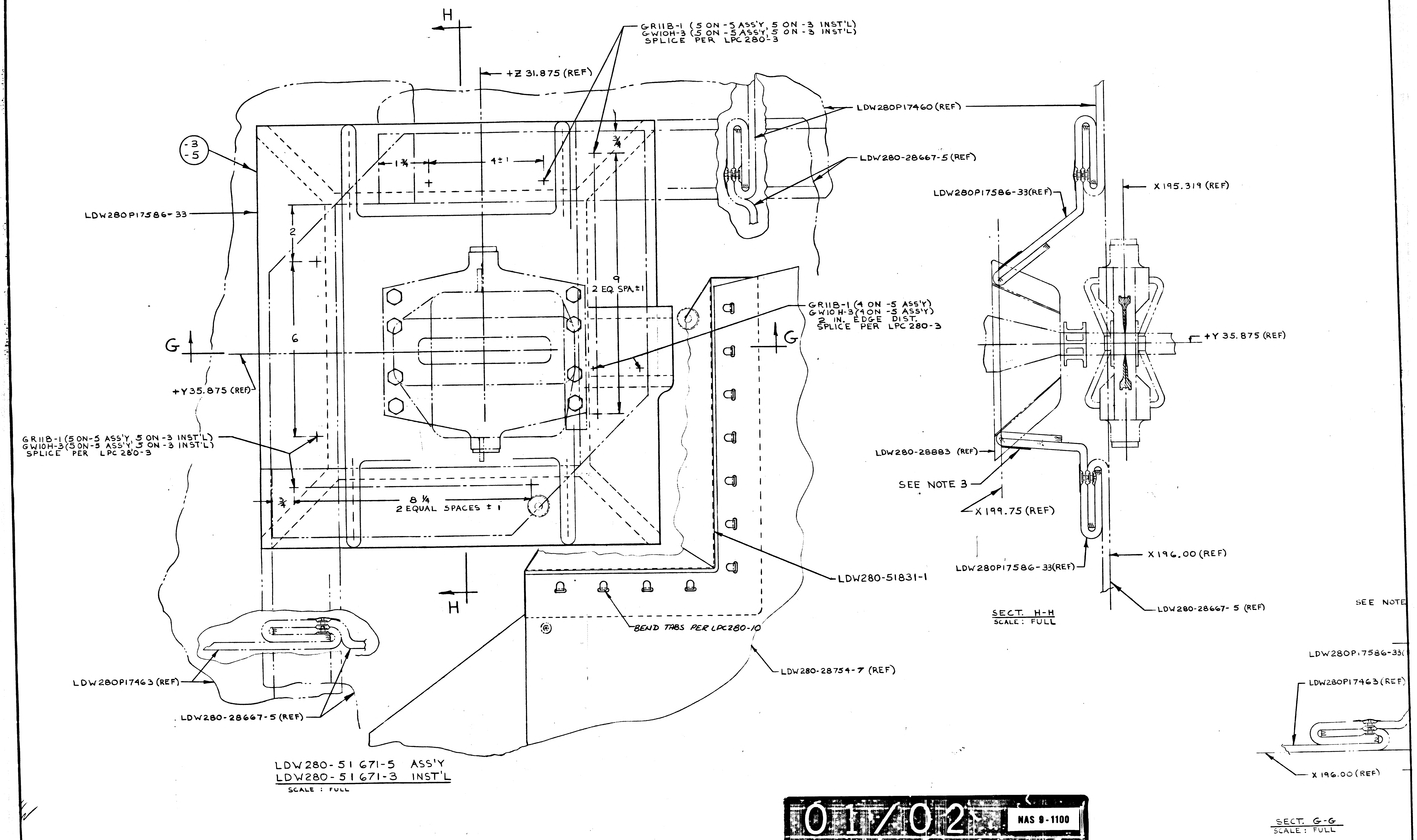
H
GR11B-1 (5 ON -5 ASS'Y, 5 ON -3 INST'L)
GW10H-3 (5 ON -5 ASS'Y, 5 ON -3 INST'L)
SPLICE PER LPC 280-3
+Z 31.875 (REF)
LDW280P17460 (REF)
LDW280-28667-5 (REF)
-3
-5
1 3/4
4 ± 1
3/4
LDW280P17586-33
LDW280P17586-33 (REF)
X 195.319 (REF)
2
9
2 EQ SPA ± 1
6
GR11B-1 (4 ON -5 ASS'Y)
GW10 H-3 (4 ON -5 ASS'Y)
2 IN. EDGE DIST.
SPLICE PER LPC 280-3
G
G
+Y 35.875 (REF)
+Y 35.875 (REF)
GR11B-1 (5 ON-5 ASS'Y, 5 ON -3 INST'L)
GW10H-3 (5 ON-5 ASS'Y, 5 ON -3 INST'L)
SPLICE PER LPC 280-3
LDW280-28883 (REF)
SEE NOTE 3
3/4
8 1/4
2 EQUAL SPACES ± 1
X 199.75 (REF)
LDW280-51831-1
X 196.00 (REF)
LDW280P17586-33 (REF)
H
LDW280-28667-5 (REF)
SECT. H-H
SCALE: FULL
SEE NOTE
BEND TABS PER LPC280-10
LDW280P17586-33
LDW280-28754-7 (REF)
LDW280P17463 (REF)
LDW280P17463 (REF)
LDW280-28667-5 (REF)
X 196.00 (REF)
LDW280-51671-5 ASS'Y
LDW280-51671-3 INST'L
SCALE: FULL
SECT. G-G
SCALE: FULL

01/02 NAS 9-1100

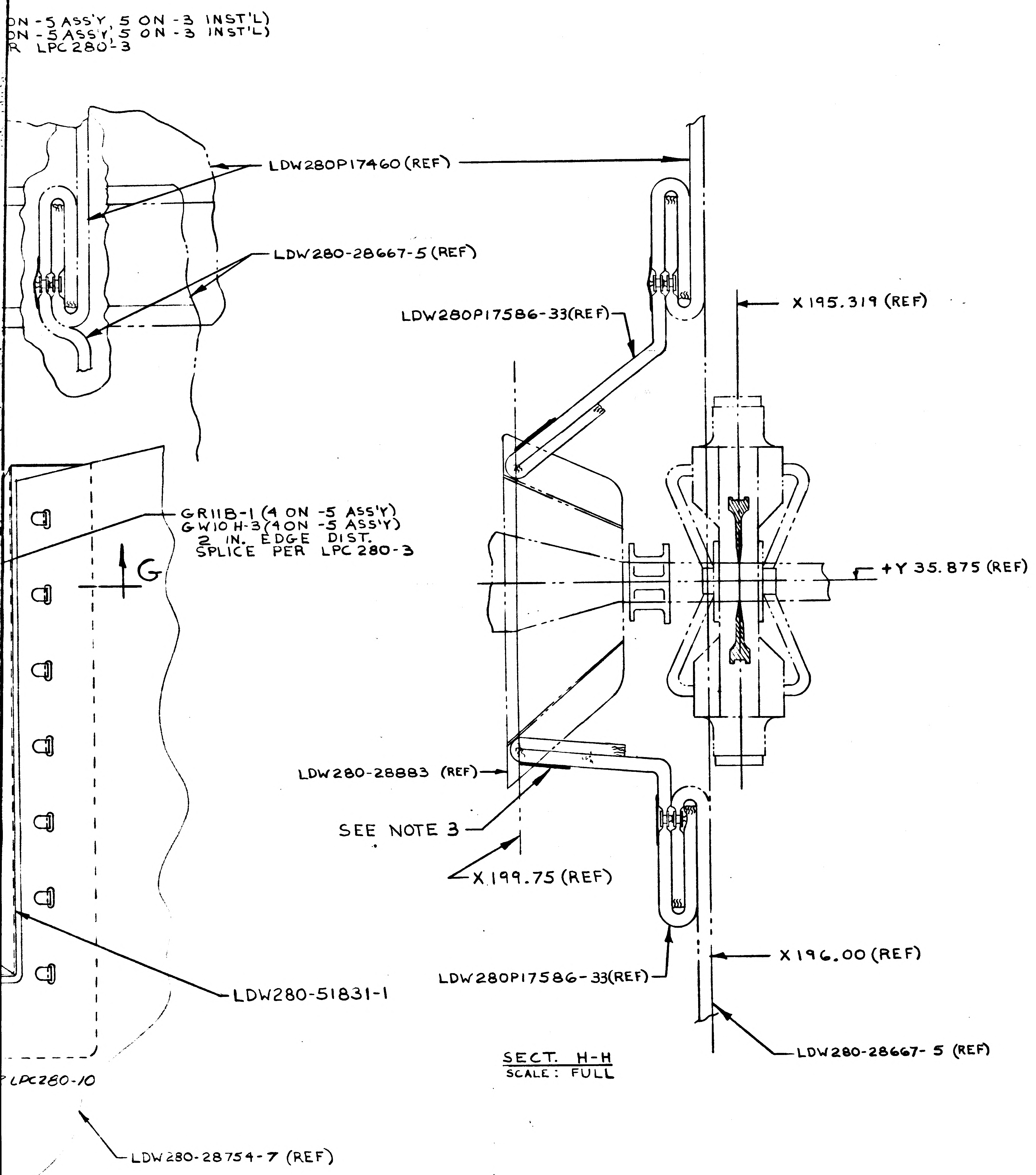
ON - 5 ASS'Y, 5 ON -3 INST'L)
ON - 5 ASS'Y, 5 ON -3 INST'L)
R LPC 280-3
LDW280P17460 (REF)
LDW280-28667-5 (REF)
LDW280P17586-33 (REF)
X 195.319 (REF)
GR11B-1 (4 ON -5 ASS'Y)
GW10 H-3 (4 ON -5 ASS'Y)
2 IN. EDGE DIST.
SPLICE PER LPC 280-3
G
+Y 35.875 (REF)
LDW280-28883 (REF)
SEE NOTE 3
X 199.75 (REF)
X 196.00 (REF)
LDW280P17586-33 (REF)
LDW280-51831-1
LDW280-28667-5 (REF)
LPC280-10
LDW280-28754-7 (REF)

SECT. H-H
SCALE: FULL

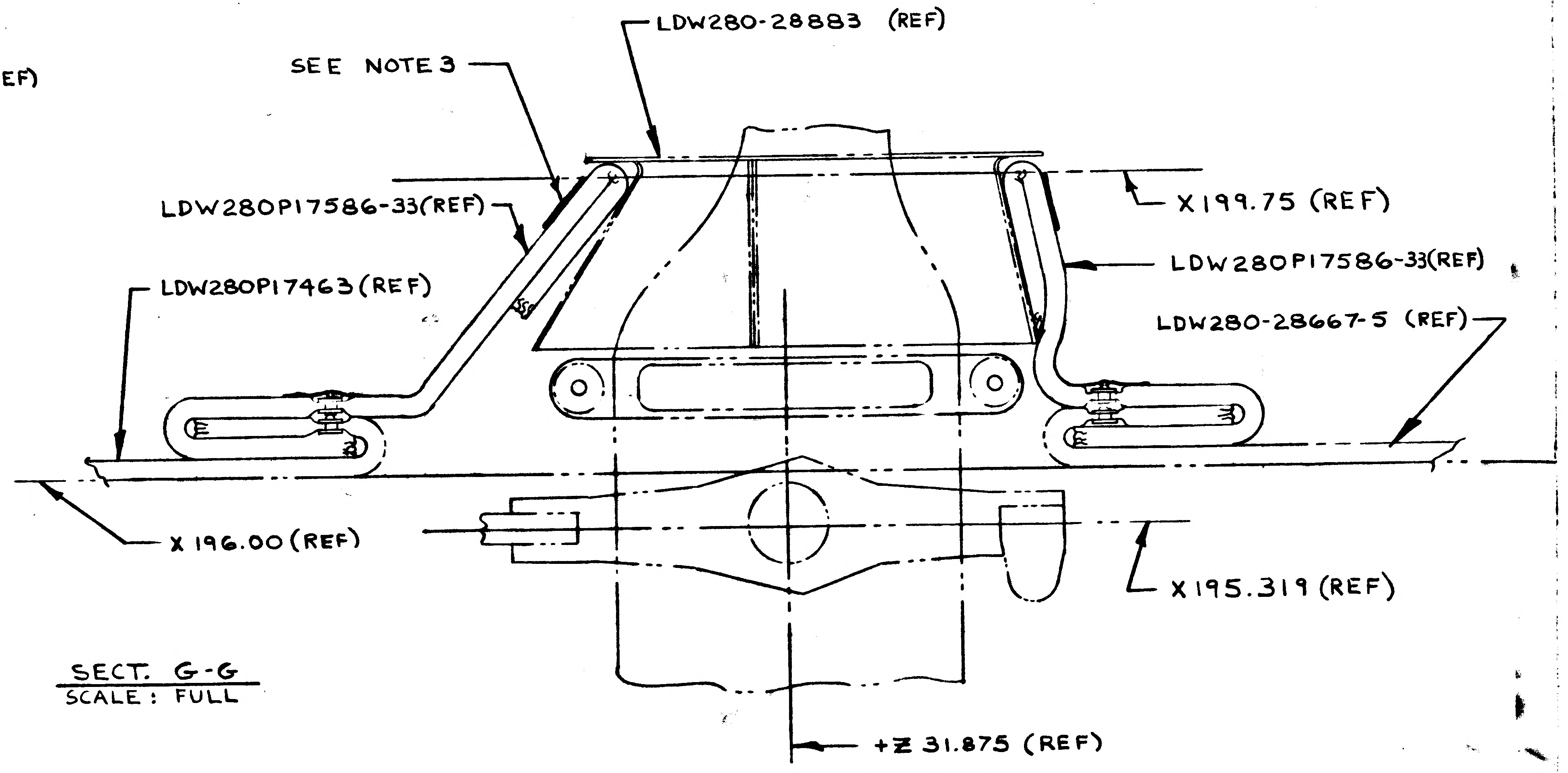
LDW280-28883 (REF)
SEE NOTE 3
LDW280P17586-33 (REF)
X 199.75 (REF)
LDW280P17586-33 (REF)
LDW280P17463 (REF)
LDW280-28667-5 (REF)
X 196.00 (REF)
X 195.319 (REF)
+Z 31.875 (REF)

SECT. G-G
SCALE: FULL

02/024 NAS 9-1100

NOTE:
3. WRAP BLANKET INTO CYLINDRICAL SHAPE AND TAPE BLANKET TO ITSELF USING LDW280P17590-11 TAPE.
4. COLLAR SPLICE AND SPLICE BETWEEN COLLAR AND OTHER BLANKETS TO BE DONE PER LPC 280-3.

LAYOUT RELEASE MAY BE REDRAWN ON PRODUCTION FORMAT

MANUFACTURING OPERATIONS UNLESS OTHERWISE SPECIFIED NOTES CHECKED √ APPLY TO THIS DWG.	
PART NUMBER AND ALL OTHER MARKINGS IN REGION MARKED ☒ USE BOTH SIDES IF NECESSARY.	
FILLET AND INSIDE CORNER RADII TOLERANCES .016R TO .062R ± .010 .063R TO .250R ± .015 OVER .250R ± .030	
DEPTH SHOWN FOR TAPPED HOLES IS FULL THDS. 2-3 IMP THDS. BEYOND PERMISSIBLE.	
EXTERNAL THREAD LENGTH SHOWN INCLUDES 2 IMPERFECT THREADS MAX.	
DO NOT CADMIUM PLATE & PAINT HOLES OR SURFACES MARKED WITH DOUBLE ASTERISK.	
MISMATCH STEP OF ± .005 PERMISSIBLE DUE TO CHANGE OF CUTTERS AT INSIDE INTERSECTING SURFACES.	
DIAMETERS MARKED MUST BE CONCENTRIC WITHIN FULL INDICATOR READING	
HOLES MUST BE KEPT FREE OF CHROME PLATING SOLUTION.	
ALL DIMENSIONS SHOWN TO BE MET AFTER CADMIUM PLATING. THICKNESS OF PLATE .0003 MIN. TO .0005 MAX. MIN. THICKNESS TO BE .0002 ON THREADED AREAS. NO ALLOWANCE FOR PLATING IN HOLES	
125 √ SURFACE ROUGHNESS INCLUDING REAMED HOLES PER MIL-STD-10	
200 √ FOR ALL DRILLED HOLES	
REMOVE ALL BURRS. BREAK ALL EDGES .015-.031	
INSPECTION INFORMATION MINIMUM PERMISSIBLE AVERAGE EDGE DISTANCE MARKED IS	
SYMBOL √ DENOTES SURFACE TO BE MACHINED	
UNLESS OTHERWISE SPECIFIED TOLERANCE ON FLANGES IS ± 1/32	
LENGTHS OF AN, NAS & MS AL ALY RIVETS SHORTER THAN 1 INCH ARE NOT SPECIFIED.	
TOLERANCE ON LOFTED DELINEATIONS IS	

DWG SIZE 34 X

PRINTING INFO ONLY
FULL SIZE SHEET AREA (36 X)= SQ. FT.
1/2 SIZE SHEET AREA (1/4 OF FULL)= SQ. FT.

PRINT TRIM LINE

LDW280-51671 A

LDW280-51671 A

LM
GRUMMAN AIRCRAFT ENGRG CORP., BETHPAGE, L. I., NEW YORK
SIZE J
CODE IDENT NO. 26512
LDW280-51671 A
MODEL OR END ITEM
SCALE FULL
SHEET 3.00

SUPERCEDES SH. 3.00 LDW280-51671 N.C. 8/3/66

ENG 32.1 REV 3-65

GRUMMAN AIRCRAFT ENGINEERING CORP.
CODE IDENT NO. 26512

ENGINEERING ORDER

DWG. NO. LDW280-51671
EO NO. B1
CONTROL INFO NO. LM 29-1096

ON -3 INSTL & -5 ASSY REVISE AS SHOWN:
B/M, QTY GR11B-1 & GW10H-3; (12) WAS (14) ON-5, (8) WAS (10) ON-3.
F/D, 2 PLACES, GR11B-1 & GW10H-3; (4) WAS (5) ON-3 & -5;
REMOVE "2 EQ SP ± 1" FROM 9 & 8 1/4 DIM.

REWORK: IF HOLES ARE PUNCHED PATCH PER LPC 280-6.

DETAIL SPEC REQ	☐	CL II ENGRG CHG	☑	CL I ENGRG CHG	☐

29

REASON FOR EO: TO AGREE WITH PARTS MADE FROM LDW280P17586-37 SCT TEMPLATE. PARTS CONFORM

DESCRIPTION OF EO: ON-3 & -5 REVISED QTY OF GR11B-1 & GW10H-3 (8) WAS (10) ON-3; (12) WAS (14) ON-5. REVISED B/M & F/D TO AGREE.

GAEC EO RELEASE: JK

MODEL	EFFECTIVITY PROCURING ACTIVITY NO.	GAEC UNIT NO.	SUB CONTR UNIT NO.
LM	NOT	REQ'D.	

DRAWING CHANGE REQD: REVISE DWG ✓ | RECORD EO

DISPOSITION OF PARTS: NOT REQD (REWORK | SCRAP)

	VDI	SUPPORT	RELIAB. GROUP	GROUP LEADER	STRESS GROUP	LIAISON ENGRG	PROJ ENGRG	
APPROVED BY	Jap			—	~	W.F.	Jap	
DATE	11/13/67			—	✓	10/10/67	11/13/67	11-9-67

PRIORITY: E29

DRAWING TITLE: SHIELD INSTL D/S QUAD IV GUILLOTINE ACCESS COVER THERMAL

DRAWING NO. LDW280-51671

EO NO. B1

ISSUED BY LIAISON C. J. MONTEBELLO X7930 SECTION VD1 GROUP NO. 335 PL 25

01

NAS 9-1100

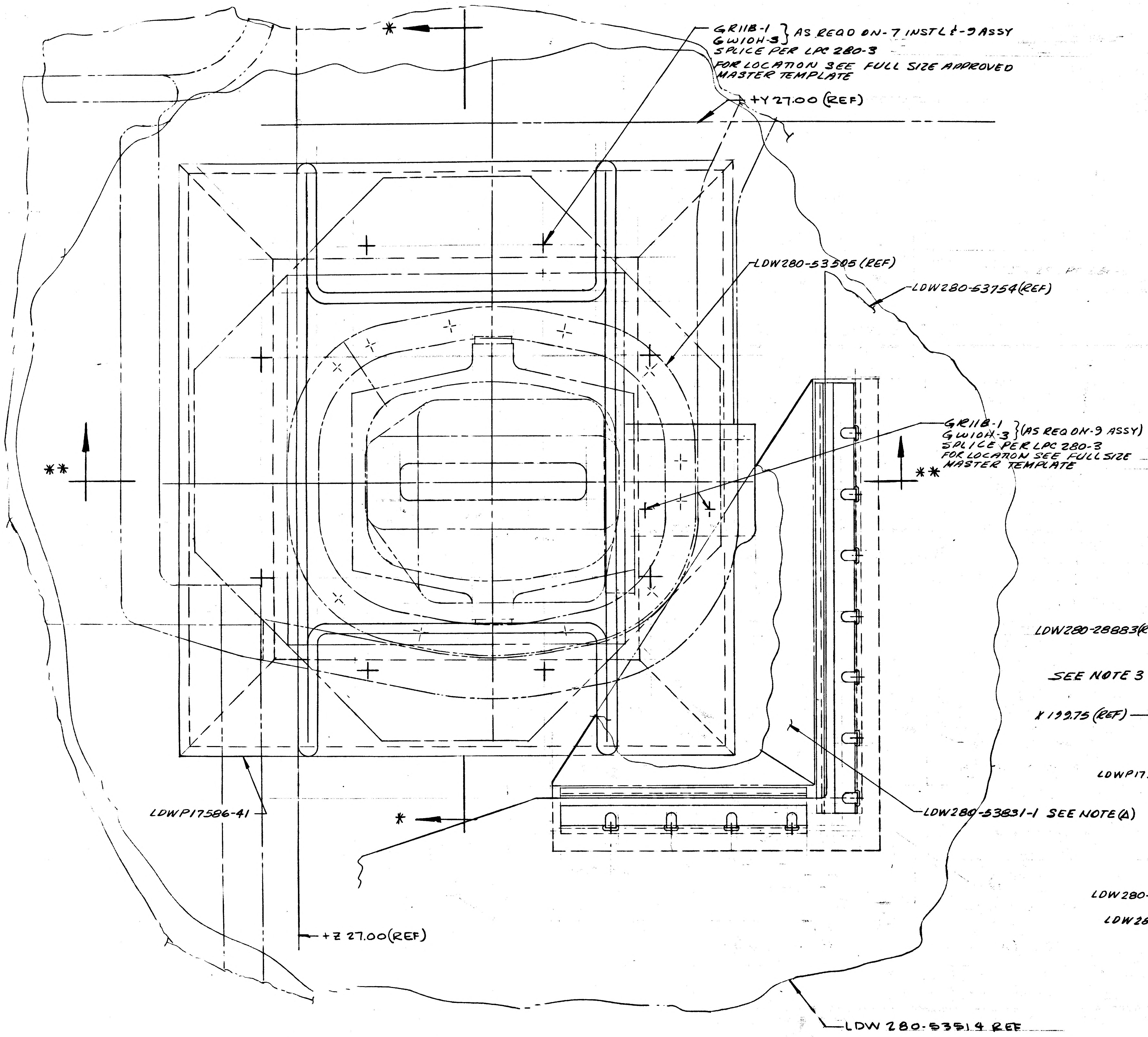
*
GR11B-1
GW10H-3
AS REQD ON-7 INSTL &-9 ASSY
SPLICE PER LPC 280-3
FOR LOCATION SEE FULL SIZE APPROVED MASTER TEMPLATE
+Y 27.00 (REF)
LDW280-53505 (REF)
LDW280-53754 (REF)
GR11B-1
GW10H-3
(AS REQ ON-9 ASSY)
SPLICE PER LPC 280-3
FOR LOCATION SEE FULL SIZE MASTER TEMPLATE
**
**
LDWP17586-41
*
LDW280-53831-1 SEE NOTE (A)
+Z 27.00 (REF)
LDW 280-53514 REF

LDW280-53831-9 ASSY
-7 INSTL } (ADD)

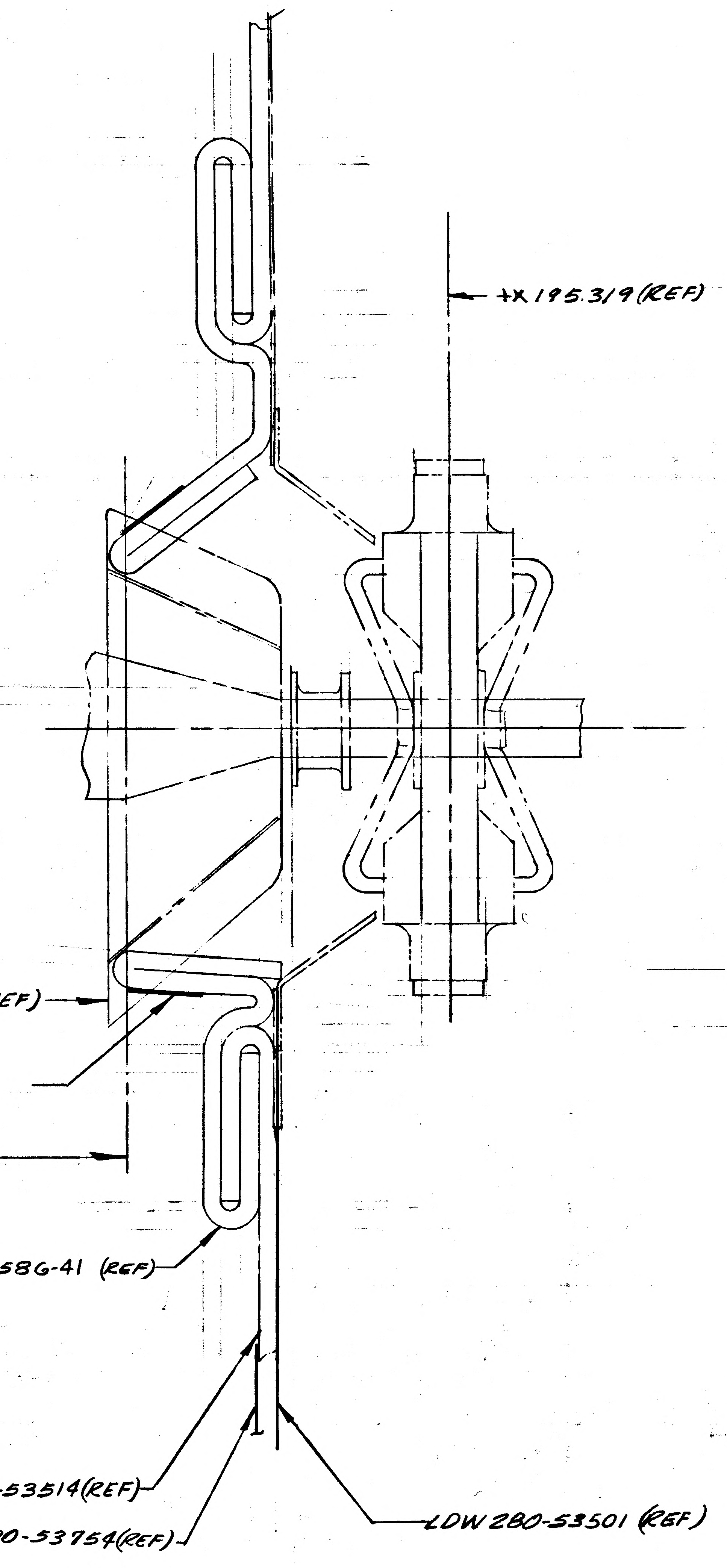
+X 195.319 (REF)
LDW280-28883 (REF)
SEE NOTE 3
X 199.75 (REF)
LDWP17586-41 (REF)
LDW280-53514 (REF)
LDW280-53754 (REF)
LDW 280-53501 (REF)

SECTION *-* FULL SCALE

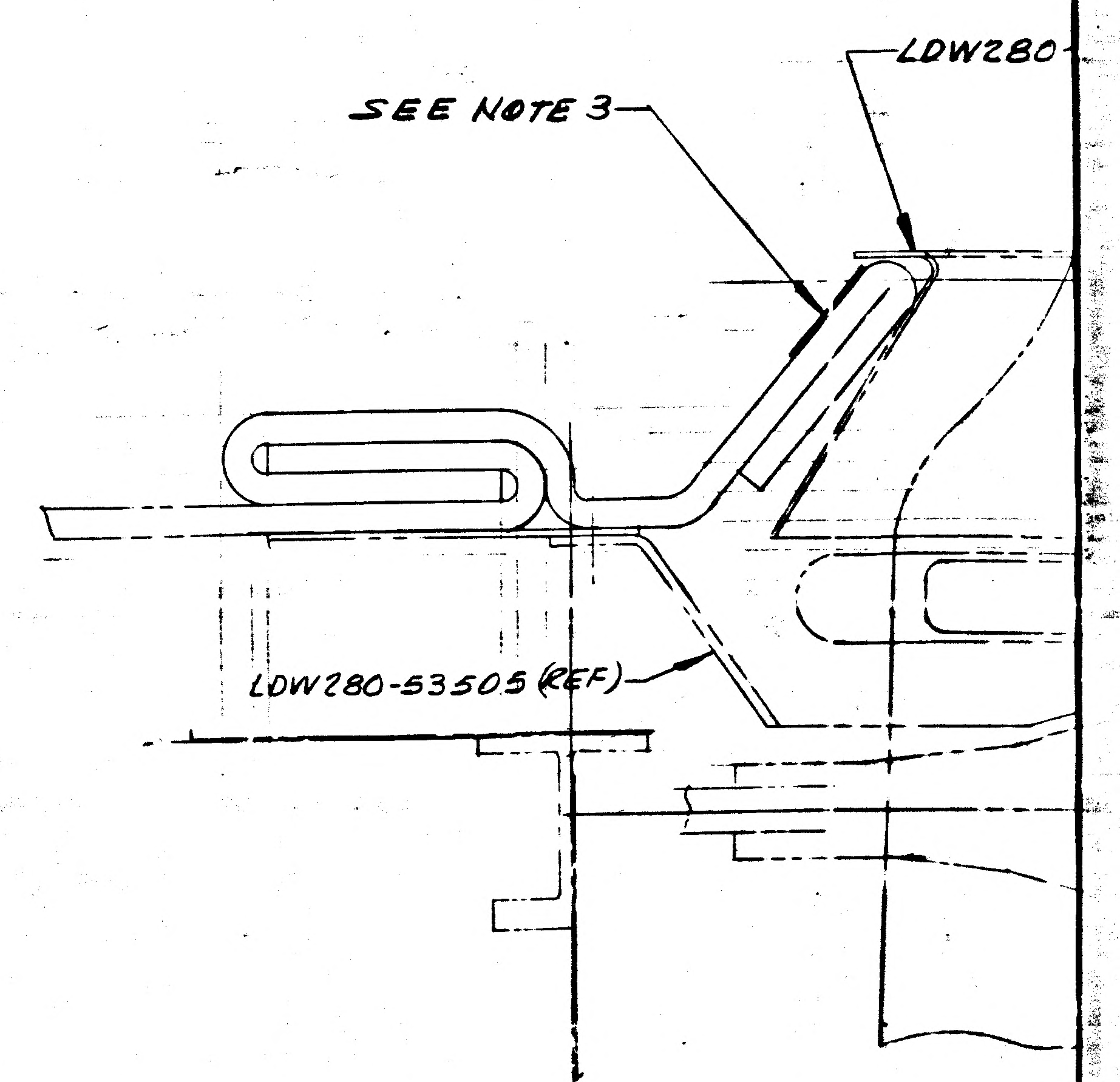
SEE NOTE 3
LDW280
LDW280-53505 (REF)

SECTION **-** FULL SCALE

01/02 NAS 9-1100

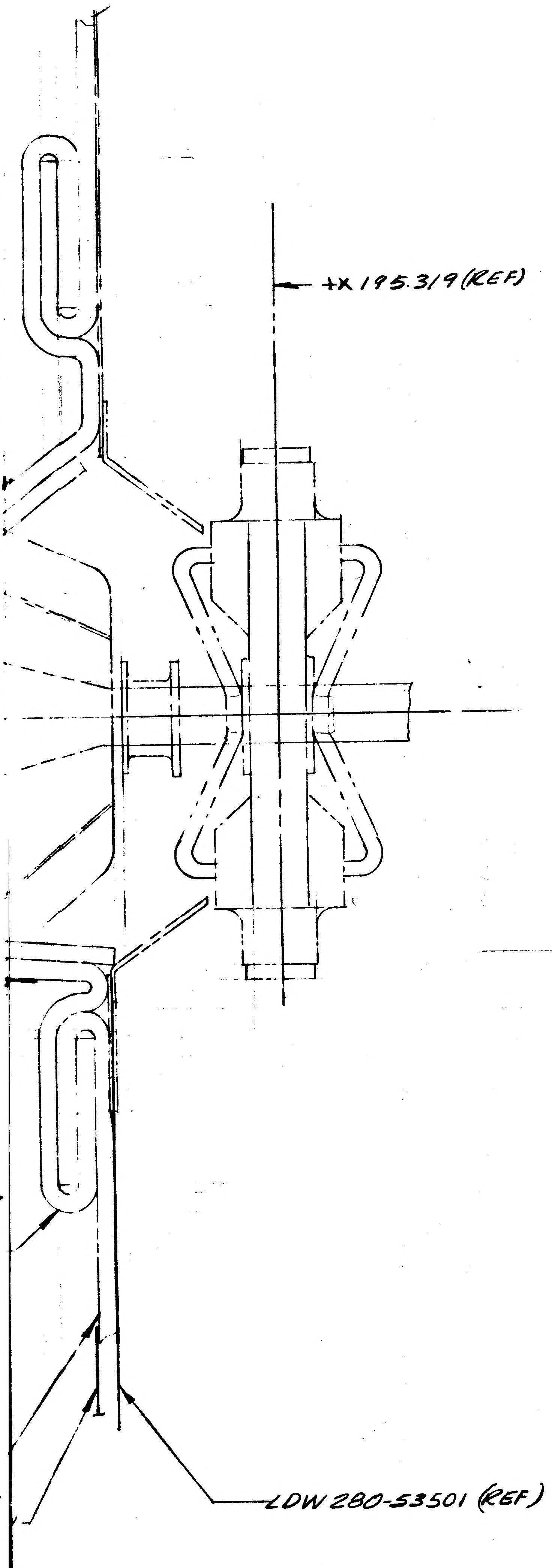
+X 195.319 (REF)
LDW 280-53501 (REF)

- FULL SCALE

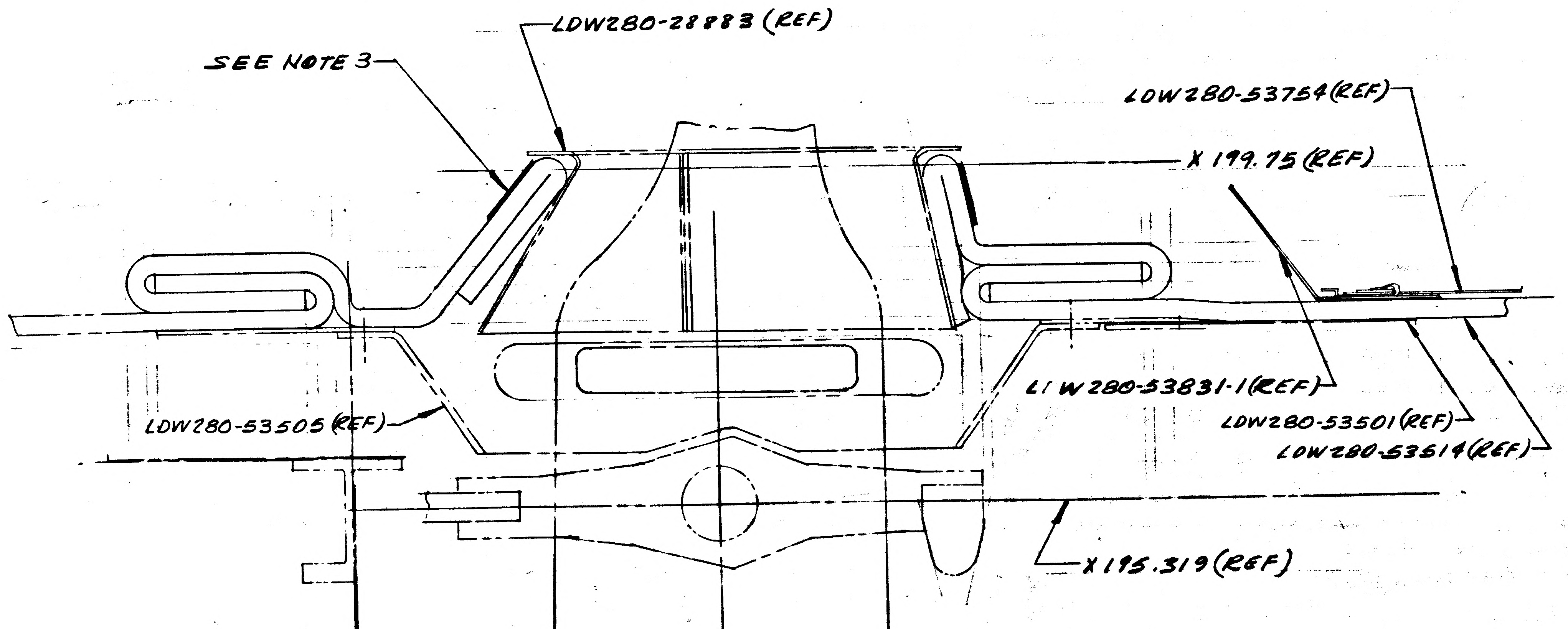
SEE NOTE 3
LDW280-28883 (REF)
LDW280-53754 (REF)
X 199.75 (REF)
LDW280-53831-1 (REF)
LDW280-53505 (REF)
LDW280-53501 (REF)
LDW280-53514 (REF)
X 195.319 (REF)

SECTION **-** FULL SCALE

IN F/D & L/M ADD-7 & -9 SAME AS -3 & -5 EXCEPT AS SHOWN:
REMOVE LDW280-51831-1 (1), ADD LDW280-53831-1(1)
IN L/M ON-7 ADD-9 (1 REQD)
IN L/M ON-9 REMOVE LDW280P17586-33(1), ADD LDW280P17586-41(1)
GW10H-3 & GR11B-1 (AS REQD ON -7 & -9) WAS (8 EA & 12 EA REQD)
IN M/B RESTRICT -3 & -5 TO LM-1 & LM-2
ADD-7 (1 EA REQD ON LDW280-53553 EFF LM-3)
(1 EA REQD ON LDW280-54553 EFF LM-4 THRU LM-15)
(ON END ITEM LFM420-2370-003, LDW420-2370, N/A LDW280-53553, 1 REQD)
USE NEXT HIGHER SECTION LETTERS FOR *-* & **-**
IN NOTES ADD NOTE (Δ):
(Δ) INSTALL LDW280-53831-1 PER LPC 280-25

02/02 NAS 9-1100

Ⓐ

(5)

DETAIL SPEC REQD	CLASS II ENGRG CHG	CLASS I ENGRG CHG	✓ LCD 1244

CONTROL INFO NO. LDW280B0032

REASON FOR EO: TO PROVIDE FOR FITH SHIELD

DESCRIPTION OF EO: ADDED -7 INSTL AND -9 ASSY
RESTRICTED -3 & -5 TO LM-1 & LM-2, REMOVED LM-3 THRU LM-15

GRUMMAN EO RELEASE 12-2-67

MODEL	PROCURING ACT. NO.	GAEC UNIT NO.	SUB CONTR UNIT NO.
LM		LM3(33)	
		THRU	
		LM15(45)	
LM	LFM420-2370-003		
LM	LDW420-2370 SER#1		

DRAWING REVISION REQD: REVISE DWG	RECORD EO	DISPOSITION OF PARTS: REWORK	SCRAP				RELIAB GROUP	GROUP LEADER	STRESS GROUP	LIAISON ENGRG	PROJ ENGR	
✓			✓	BY								
				DATE	11/30/67	11/30/67		11-28-67	11/30/67		11/30/67	12-1-67
				P	V.D.I.	~~THERMO SUPPORT~~						

PRIORITY C

DRAWING TITLE: SHIELD INSTL-D/S QUAD IV GUILLOTINE ACCESS COVER THERMAL

ENGINEERING ORDER
DRAWING NO. LDW280-51671
EO NO. B2

CODE IDENT NO. 26512

GRUMMAN AIRCRAFT ENGINEERING CORP
BETHPAGE, L. I., N. Y.

P. THORJUSEN
CL 12-01-67
ISSUED BY J. WYNN X1153 SECTION V.D.I.
GROUP NO. 335 PL 25

ENG 32.3 REV 3-65

B

ENG 32.1 REV 3-65

GRUMMAN AIRCRAFT ENGINEERING CORP.
CODE IDENT NO. 26512
ENGINEERING ORDER

DWG. NO. LDW280-51671		EO NO. B3
CONTROL INFO NO. LDW280B0636		

IN FLD, B/M & MB REMOVE -7 INSTL, NHA LDW280-53553, LM-3(33)
NHA LDW280-54553, LM-4(34) THRU.
LM-15(45)
1 EA REQD/MOD

IN FLD & B/M REMOVE -9 ASSY

DETAIL SPEC REQ		CL II ENGRG CHG		CL I ENGRG CHG	✓	LCD 2360 (5)

REASON FOR EO: REMOVE TEMP CONTROL COATED H FILM TAPE

DESCRIPTION OF EO: -7 EFFECTIVITY WAS LM-3(33) THRU LM-15(45)
REMOVED -9

Ⓡ GAEC EO RELEASE: VC 1/12/68

MODEL	PROCURING ACTIVITY NO.	GAEC UNIT NO.	SUB CONTR UNIT NO.
LM		LM-3(33)	
		THRU	
		LM-15(45)	

DRAWING CHANGE REQD: REVISE DWG ✓ | RECORD EO

DISPOSITION OF PARTS: REWORK | SCRAP -7 -9

APPROVED BY									
DATE	12/8/67			12-8-67	12/9/67		1/12/68	1-12-68
P	VD1	SUPPORT	RELIAB. GROUP	GROUP LEADER	STRESS GROUP	LIAISON ENGRG	PROJ ENGRG	

PRIORITY: C

DRAWING TITLE: SHIELD INSTL - D/S - QUAD IV GUILLOTINE ACCESS COVER - THERMAL

DRAWING NO.: LDW280-51671

EO NO.: B3

6 JAN 68
ISSUED BY E.J. Comiskey, 7033 SECTION VD1/THORJUSEN GROUP NO. 335 PL 25

01 NAS 9-1100

GRUMMAN AIRCRAFT ENGINEERING CORP.
CODE IDENT NO. 26512
ENGINEERING ORDER

ENG 32.1 REV 3-65

DWG. NO. LDW280-51671
EO NO. B4
CONTROL INFO NO. LDW280B1916

IN F/D, B/M & M/B REMOVE -7 INST'L, N/A LDW280-53553, 1 REQ'D/MOD
EFF: LFM420-2370-003, LDW420-2370 SER #1

IN F/D & B/M REMOVE -9 ASS'Y

LFM

(5)

RSG 46

DETAIL SPEC REQ ☐ CL II ENGRG CHG ☐ CL I ENGRG CHG ☑ LCD 1244

REASON FOR EO: NEW SHIELD INST'L CREATED

DESCRIPTION OF EO: REMOVE -7 INST'L, N/A LDW280-53553, 1 REQ'D/MOD, EFF LFM 420-2370-003, LDW420-2370 SER #1, REMOVE -9 ASS'Y

Ⓡ GAEC EO RELEASE: JK 2/10/

MODEL	PROCURING ACTIVITY NO.	GAEC UNIT NO.	SUB CONTR UNIT NO.
LM	LFM420-2370-003		
LM	LDW420-2370 SER #1		

DRAWING CHANGE REQD: REVISE DWG	RECORD EO	DISPOSITION OF PARTS: REWORK	SCRAP
✓			✓

APPROVED BY									
DATE	2/2/68			2/2/68	2/5/68		2/2/68	2-8-68
P	VDI	SUPPORT	RELIAB. GROUP	GROUP LEADER	STRESS GROUP	LIAISON ENGRG	PROJ ENGRG	~~CDP~~

PRIORITY: C

DRAWING TITLE: SHIELD INST'L - DS QUAD IV GUILLOTINE ACCESS COVER THERMAL

DRAWING NO. LDW280-51671

EO NO. B4

CDR 2-16-68

ISSUED BY R. STOBE/P. THORJUSEN (EXT 1153) SECTION VD1 GROUP NO. 335 PL 25

01

NAS 9-1100

CANCELLED

BY DCRF No. DCRF 323-1200

DATE 9-15-66

EOAI CREATED DWG-NOT MADE
REPLACED BY LDW280-28727

Release
12-15-66

LE(001)
MD 14
12/14/6

2

		GRUMMAN AIRCRAFT ENGRG CORP. 4 BETHPAGE, L. I., N. Y.		
GP LEADER	12/14/66 JAP	SHIELD INSTL-DESCENT STAGE LANDING GEAR-CHOCK PENETRATION-THERMAL		
PROJECT	RM Colbee 12-14-66	SIZE A	CODE IDENT. NO. 26512	LDW280-51727 B
		SCALE		SHEET

ENG 163A REV. 5-64

01

NAS 9-1100

LDW280-51732 A

MODEL OR END ITEM	NEXT ASSY	MODULE OR SER NO.	REQD PER MODULE OR END ITEM
LM	LDW280-51508	LM-1(31)	1
PART NO. LDW280-51732-1		GAEC SCH NO. 501	

2

SH REV STATUS: FOR DESCRIPTION OF REV SEE SUBQ SH				
SHEET	1.00	1.10	2.00	3.00
REV	A	A	A	A
SHEET				
REV				
SHEET				
REV				

LAST SECT LTR USED

LAST DASH NO. USED -3

GRUMMAN REL INFO
PRIM NO. 207 | LE(001) MD-14 | 12/19/6

UNLESS OTHERWISE SPECIFIED DIMENSIONS ARE IN INCHES.
TOLERANCE UNLESS SPECIFIED
FRACTIONS - DECIMALS – ANGLES
±1/32 ±.020 ± 1/2°
ORIG DWG AUTH
DETAIL SPEC REQUIREMENT
CLASS II ENGRG CHANGE
CLASS I ENGRG CHANGE

CONTRACT NO. NAS 9-1100
LINE ITEM I
DOCUMENTATION TYPE II.

DRAWN BY	FITZGERALD 12-14-66	RELIABILITY	
LAYOUT BY			
CHECKED BY	EG 12-14-66		
GR LEADER			
VEH.DES.INT.	[illegible] 12/15/66		
STRUCTURES	[illegible] 12/15/66	PROJ ENGR	P.W. Culbeg [illegible] 12-15
STRUCTURES	EBJ	REL GROUP	[illegible] 12/16/66
WEIGHTS			

GRUMMAN AIRCRAFT ENGRG CORP
BETHPAGE, L. I., NEW YORK

SUPPORT INSTALLATION
DESCENT STAGE ~ SIMULATED
GOX TANK

SIZE B | CODE IDENT NO. 26512 | LDW280-51732 | A
SCALE NONE | SHEET 1.00 OF 4

ENG 77 1 12-66

01 NAS 9-1100

REVISIONS FOR CONTINUATION OF REVISIONS SEE SHEET ____

CHANGE LTR	ITEM NO.	SHEET NO.	ZONE	GRUMMAN INFO ONLY	DET SPEC	CLASS I	CLASS II	ENGRG ORDER	DESCRIPTION	EFFECTIVITY	DISPOSITION OF EXISTING PARTS		CHANGED BY AND DATE	ENGRG APPD	[redacted] APPD
											REWORK	SCRAP			
A	2	1.00, 1.10 2.00 & 3.00					✓	EO A1	INITIAL DWG RELEASE PARTS MADE PER EO EG	LM-1 (31)	NOT	REQ'D	FITZ-GERALD 12-14-66	12-16	12-16-65
	2	2.00 & 3.00						②	REF EO A1 ADDED GN512H-08 (4) & MATERIAL & FINISH 88 FOR SHIM AS REQD N.F.						

CHG APPROVED

LTR	~~GROUP LDR~~	VEH.DES.INT	STRUCTURES	STRUCTURES	WEIGHTS	RELIABILITY				
A			12/15	12/15						

GRUMMAN AIRCRAFT ENGRG CORP., BETHPAGE, L. I., NEW YORK

SIZE	CODE IDENT NO.		
B	26512	LDW280-51732	A

SCALE NONE SHEET 1.10

ENG 77.16 3-66

01

NAS 9-1100

QTY PER ASSEMBLY -3	QTY PER ASSEMBLY -1	CODE IDENT	PART NO.	I&T	NOMENCLATURE OR DESCRIPTION	MATERIAL	GOVT SPEC	COML SPEC	STOCK SIZE	PROCESS SYM	FINISH NO.	ZONE
4			GN512H-08	E	NUT-COLLAR	GRUMMAN STD						
	2		MS21042-4		NUT	STD PART						
4			GB511K-5-8		BOLT	GRUMMAN STD						
2			AN490HT8		ROD END	STD PART						
			SEE NOTE 1		SHIM							
	1		LDW280M17704-1		WASHER	SEE DWG						
	1		LDW280M17703-1		WASHER							
	1		LDW280M17702-1		ADAPTER							
	1		LDW280M17701-1		ADAPTER							
1			LDW280-18209-1		TUBE	SEE DWG.						
	1		LDW280-51732-3		ASS'Y					NONE	NONE	
			LDW280-51732-1	E	INSTALLATION					NONE	NONE	

SYM OR NO.	PROCESS OR FINISH	GRUMMAN SPEC OR MILITARY SPEC	SYM OR NO.	PROCESS OR FINISH	GRUMMAN SPEC OR MILITARY SPEC	SYM OR NO.	PROCESS OR FINISH	GRUMMAN SPEC OR MILITARY SPEC
						3 5	ANODIZE	LSP-14-9030

I & T: IDENTIFICATION AND TRACEABILITY IN ACCORDANCE WITH : NONE

GRUMMAN AIRCRAFT ENGRG CORP, BETHPAGE, L. I., NEW YORK

SIZE	CODE IDENT NO.		
B	26512	LDW280-51732	A
SCALE NONE		SHEET 2.00	

ENG 77.2 7-65

01

NAS 9-1100

NOTES:

1. SHIM AS REQD USING AL ALLOY QQ-A-250/4, FINISH 88

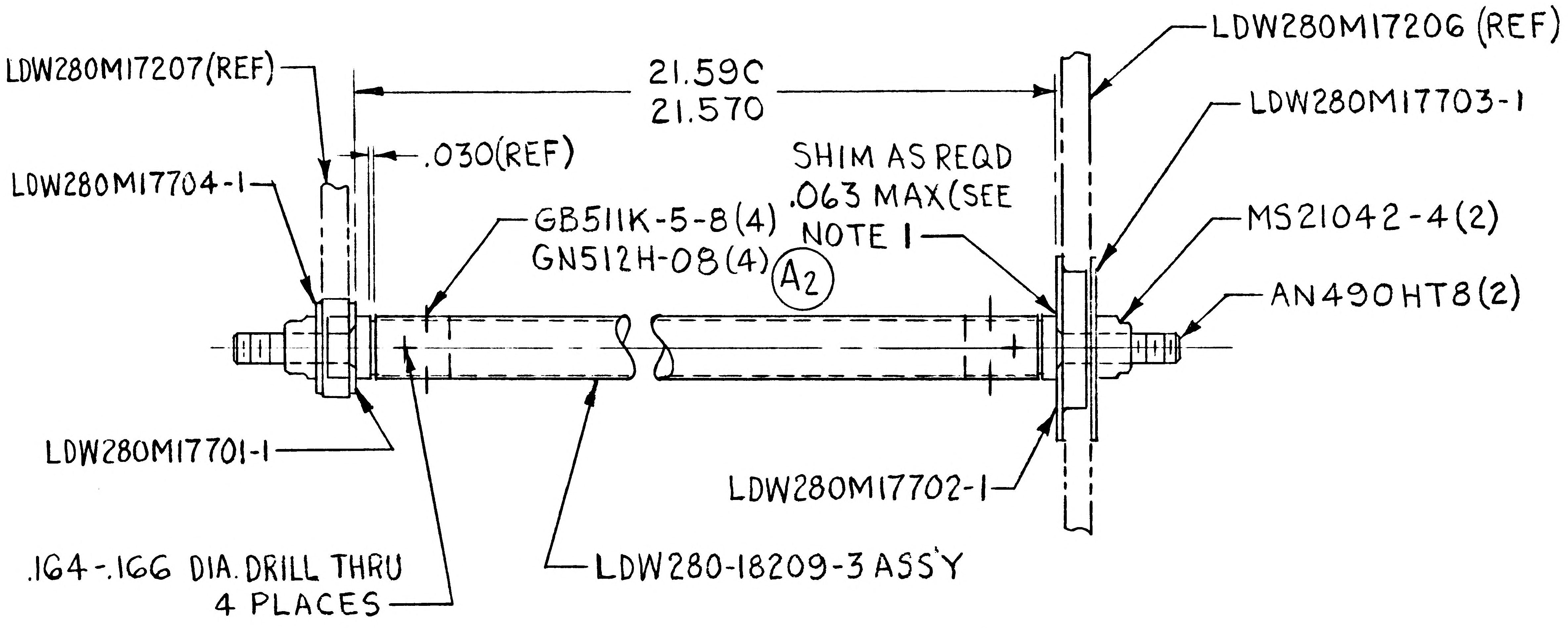
LDW280M17207(REF)
21.590
21.570
.030(REF)
LDW280M17704-1
GB511K-5-8(4)
GN512H-08(4)
A2
SHIM AS REQD
.063 MAX(SEE NOTE 1
LDW280M17206 (REF)
LDW280M17703-1
MS21042-4(2)
AN490HT8(2)
LDW280M17701-1
LDW280M17702-1
.164-.166 DIA. DRILL THRU 4 PLACES
LDW280-18209-3 ASS'Y

LDW280-51732-1 INST'L
-3 ASSY

GRUMMAN AIRCRAFT ENGRG CORP., BETHPAGE, L. I., NEW YORK

SIZE	CODE IDENT NO.		
B	26512	LDW280-51732	A
SCALE FULL		SHEET 3.00	

ENG 73.1 6-64

01

NAS 9-1100

ENG 22.2 REV 3-65

GRUMMAN AIRCRAFT ENGINEERING CORP.
CODE IDENT NO. 26512
ENGINEERING ORDER

DWG. NO.	LDW280-51732	EO NO.	A1
CONTROL INFO NO.	LDW280A 3803		

CREATE LDW280-51732-1* INSTL

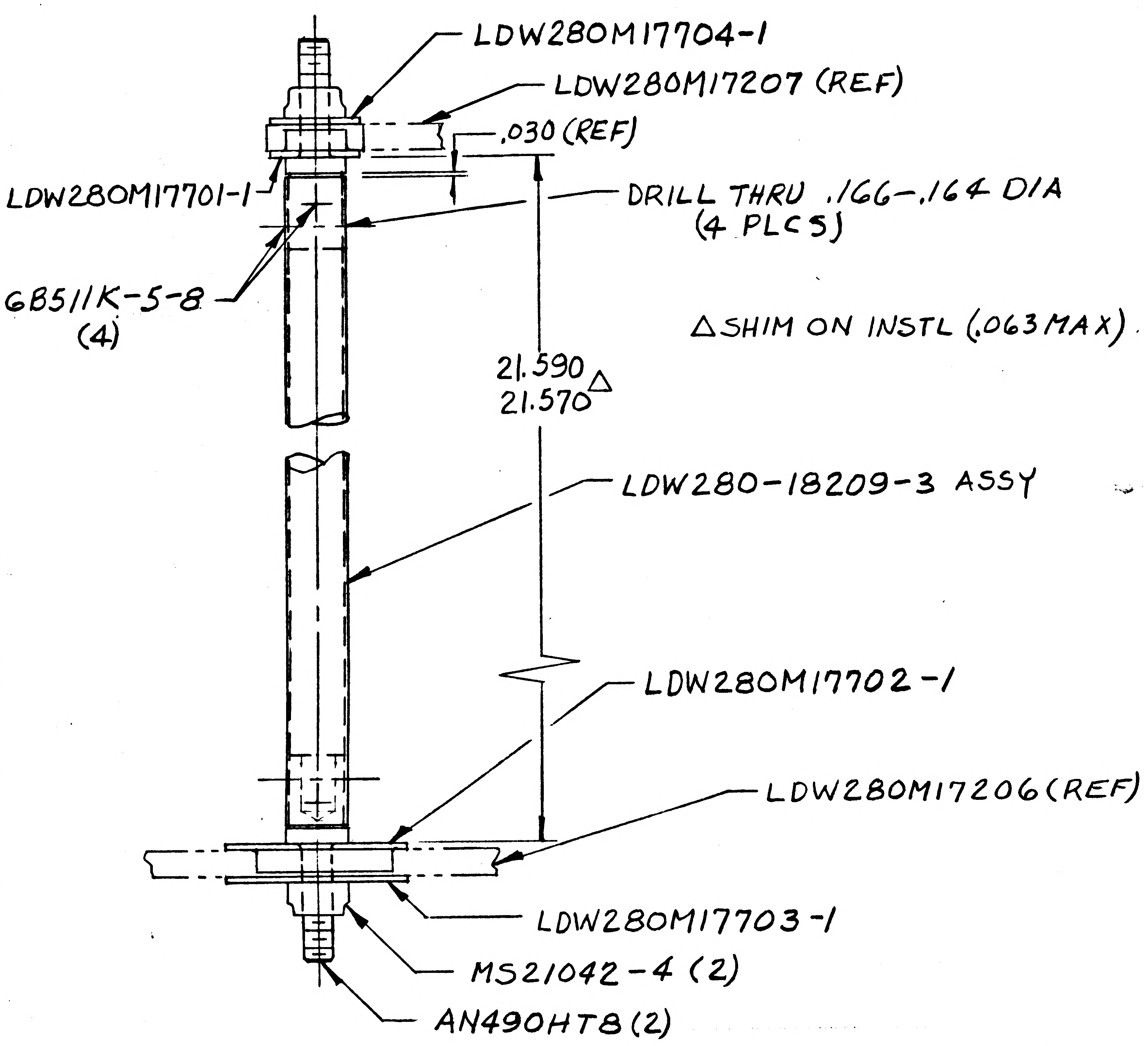
LDW280M17704-1
LDW280M17207 (REF)
.030 (REF)
LDW280M17701-1
DRILL THRU .166-.164 DIA (4 PLCS)
GB511K-5-8 (4)
△SHIM ON INSTL (.063 MAX).
21.590
21.570△
LDW280-18209-3 ASSY
LDW280M17702-1
LDW280M17206 (REF)
LDW280M17703-1
MS21042-4 (2)
AN490HT8 (2)

LDW280-51732-1 (1 REQ'D PER NEXT ASSY LDW280-51508)

QTY/ASSY -3	-1	PART NO.	I&T	DESCRIPTION	STOCK SIZE
	2	MS21042-4	E	NUT	STD PART
4		GB511K-5-8	↑	HI-LOK	STD PART
2		AN490HT8		ROD END	STD PART
1		LDW280-18209-1		TUBE	SEE DWG
	1	LDW280M17704-1		WASHER	↑
	1	LDW280M17703-1		WASHER	
	1	LDW280M17702-1		ADAPTER	↓
	1	LDW280M17701-1		ADAPTER	SEE DWG
	1	LDW280-51732-3	↓	ASSY	
-3	-1	LDW280-51732-1	E	INSTL	

*DWG NOT MADE

2

TJ Kelly 12/10 TS

DETAIL SPEC REQ		CL II ENGRG CHG	✓	CL I ENGRG CHG	

REASON FOR EO
GOX TANK SIMULATOR
(CCA-398)

DESCRIPTION OF EO
E.O. A1 INITIAL DWG RELEASE
PARTS MADE PER E.O.

GAEC EO RELEASE 501

MODEL	EFFECTIVITY PROCURING ACTIVITY NO.	GAEC UNIT NO.	SUB CONTR UNIT NO.
LM		LM-1 (31)	

DRAWING CHANGE REQD REVISE DWG	RECORD EO	DISPOSITION OF PARTS REWORK	SCRAP	APPROVED BY / DATE		SUPPORT	RELIAB. GROUP	~~GROUP LEADER~~	STRESS GROUP	LIAISON ENGRG	PROJ ENGRG	~~GOVT~~
		NOT REQD		5	11/30/66 VDI				NM 12-2-66		RMC 12-2-66	12/2/66

PRIORITY C

DRAWING TITLE SUPPORT INSTL - D.S. SIMULATED GOX TANK

DRAWING NO. LDW280-51732

EO NO. A1

ISSUED BY Jos. Evaw / JOHN STRAKOSCH X1441 SECTION V.D.I. CDR 12/2/66 GROUP NO. 335 PL 35

01
NAS 9-1100

LDW280-51742

MODEL OR END ITEM	NEXT ASSY	MODULE OR SER NO.	REQD PER MODULE OR END ITEM
PART NO.		GAEC SCH NO.	

MODEL OR END ITEM	NEXT ASSY	MODULE OR SER NO.	REQD PER MODULE OR END ITEM
PART NO.		GAEC SCH NO.	

MODEL OR END ITEM	NEXT ASSY	MODULE OR SER NO.	REQD PER MODULE OR END ITEM
LM	LDW280-28665	LM-1(31)	1 EA
PART NO. LDW280-51742-1 & -3		GAEC SCH NO. 522	

2

SH REV STATUS: FOR DESCRIPTION OF REV SEE SUBQ SH

SHEET	1.00								
REV									
SHEET	2.00								
REV									
SHEET	3.00								
REV									

LAST SECT LTR USED A

LAST DASH NO. USED 3

GRUMMAN REL INFO

PRIM NO. G(001)

207 MP-14 11-22-66

UNLESS OTHERWISE SPECIFIED DIMENSIONS ARE IN INCHES.
TOLERANCE UNLESS SPECIFIED
FRACTIONS - DECIMALS - ANGLES
±1/16 ±.030 ±1/2°

ORIG DWG AUTH
DETAIL SPEC REQUIREMENT
CLASS II ENGRG CHANGE
CLASS I ENGRG CHANGE

CONTRACT NO. NAS 9-1100
LINE ITEM #1
DOCUMENTATION TYPE II

DRAWN BY		RELIAB	
LAYOUT BY	F. MADDEN	THERMO	M. Schor 11/18/66
CHECKED BY			
GRP.LDR	11/17/66		
VDI	J. Pusateri 11/17/66		
STRUCT	11/18/66	PROJ ENGR	R. M. Carbee 11-21-66
STRUCT		REL GROUP	J. Tagliavia 11/22/66
WEIGHTS			

GRUMMAN AIRCRAFT ENGRG CORP
BETHPAGE, L. I., NEW YORK

SHIELD ASSY~DESCENT STAGE
QUAD II~SEQ~PLUME IMPINGEMENT
UPPER THERMAL SHIELD

SIZE B
CODE IDENT NO. 26512
LDW280-51742
SCALE NONE
SHEET 1 OF 3

ENG 77.1 12-65

CLR 11-18-66

01

NAS 9-1100

CL					-3	-1	CODE IDENT	PART NO.	I&T	NOMENCLATURE OR DESCRIPTION	MATERIAL	GOVT SPEC	COML SPEC	STOCK SIZE	PROCESS SYM	FINISH NO.	ZONE
C					3	2		LDW280-17938-13	E	WASHER	SEE DWG						
C					3	2		LDW280-23720-3		STAPLE ASSY							
C					1			LDW280-51744-3		SKIN ASSY							
C						1		LDW280-51744-1		SKIN ASSY							
C					7			LDW280-51743-3		FOIL ASSY							
C						7		LDW280-51743-1		FOIL ASSY							
C								LDW280-51742-3		SHIELD ASSY					NONE	NONE	
C								LDW280-51742-1	E	SHIELD ASSY	SEE DWG				NONE	NONE	

QTY PER ASSEMBLY

C.L. = CLEANLINESS LEVEL PER LSP 14-0011

SYM OR NO.	PROCESS OR FINISH	GRUMMAN SPEC OR MILITARY SPEC	SYM OR NO.	PROCESS OR FINISH	GRUMMAN SPEC OR MILITARY SPEC	SYM OR NO.	PROCESS OR FINISH	GRUMMAN SPEC OR MILITARY SPEC

I & T: IDENTIFICATION AND TRACEABILITY IN ACCORDANCE WITH : NONE

GRUMMAN AIRCRAFT ENGRG CORP, BETHPAGE, L. I., NEW YORK

SIZE B
CODE IDENT NO. 26512
LDW280-51742
SCALE NONE
SHEET 2.00

ENG 77.2 7-65

01

NAS 9-1100

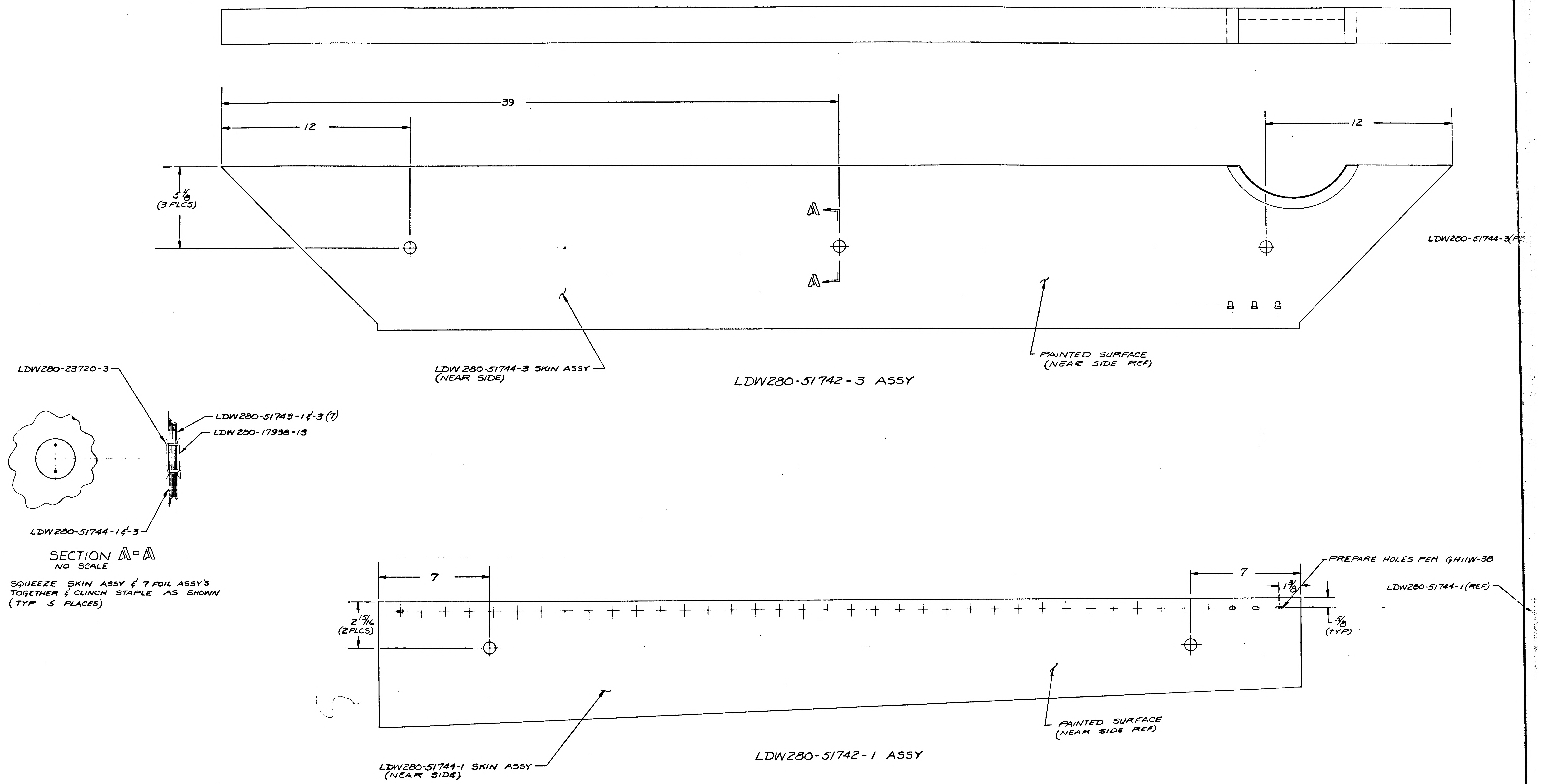
39
12
12
5 1/8
(3 PLCS)
A
A
LDW280-51744-3(
LDW 280-51744-3 SKIN ASSY
(NEAR SIDE)
PAINTED SURFACE
(NEAR SIDE REF)
LDW280-51742-3 ASSY
LDW280-23720-3
LDW280-51743-1 & -3 (7)
LDW 280-17938-13
LDW280-51744-1 & -3
SECTION A-A
NO SCALE
SQUEEZE SKIN ASSY & 7 FOIL ASSY'S
TOGETHER & CLINCH STAPLE AS SHOWN
(TYP 5 PLACES)
7
7
1 3/8
PREPARE HOLES PER GH11W-38
LDW280-51744-1 (REF)
2 15/16
(2 PLCS)
5/8
(TYP)
PAINTED SURFACE
(NEAR SIDE REF)
LDW280-51744-1 SKIN ASSY
(NEAR SIDE)
LDW280-51742-1 ASSY

01/02 NAS 9-1100

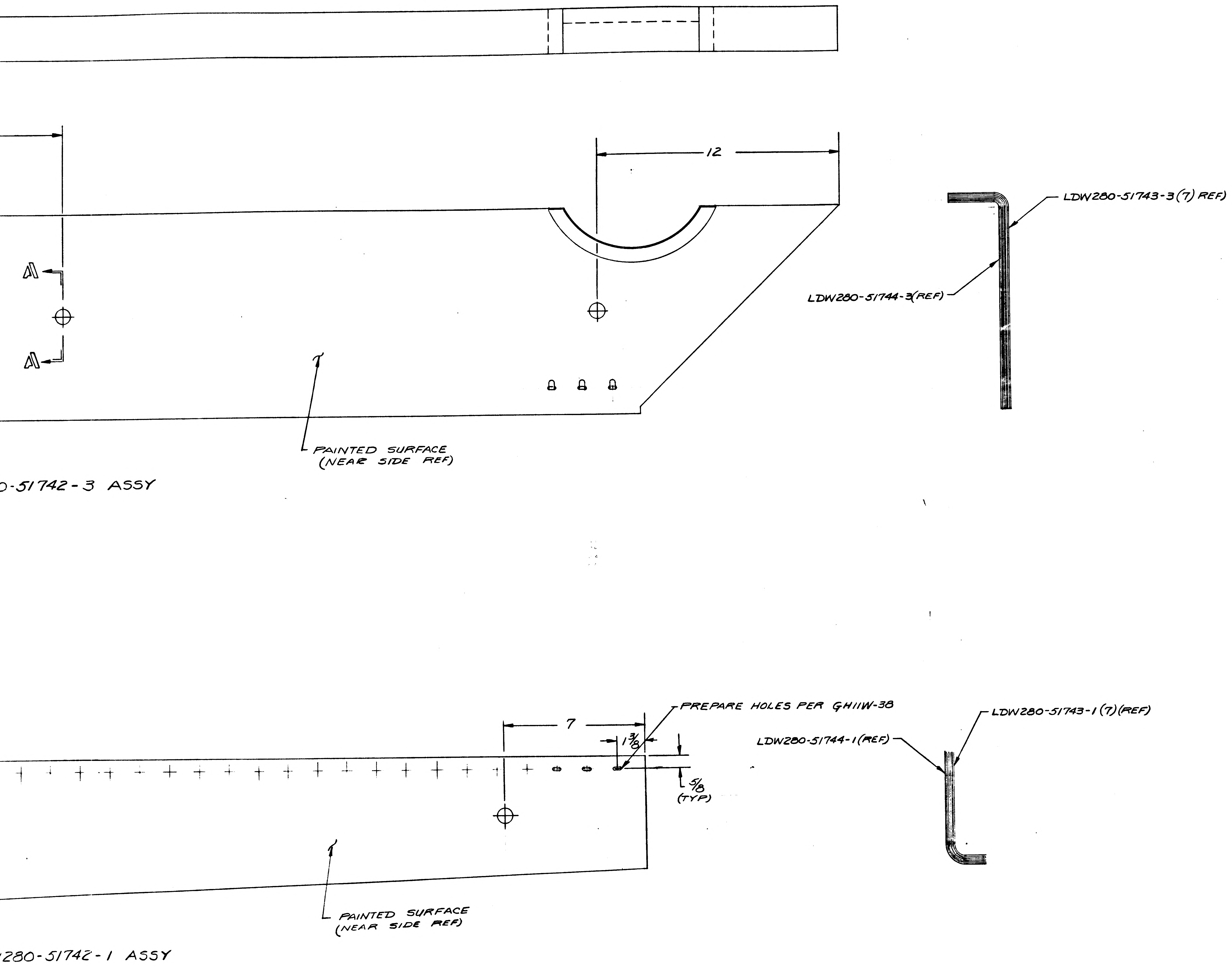
12
LDW280-51743-3 (7) REF)
LDW280-51744-3(REF)
PAINTED SURFACE
(NEAR SIDE REF)
0-51742-3 ASSY
7
1 3/8
PREPARE HOLES PER GH11W-38
LDW280-51744-1(REF)
LDW280-51743-1 (7)(REF)
5/8
(TYP)
PAINTED SURFACE
(NEAR SIDE REF)
280-51742-1 ASSY

MANUFACTURING OPERATIONS UNLESS OTHERWISE SPECIFIED NOTES CHECKED ✓ APPLY TO THIS DWG.	
PART NUMBER AND ALL OTHER MARKINGS IN REGION MARKED ⊠ USE BOTH SIDES IF NECESSARY.	☐
FILLET AND INSIDE CORNER RADII TOLERANCES .016R TO .062R ± .010 .063R TO .250R ± .015 OVER .250R ± .030	☐
DEPTH SHOWN FOR TAPPED HOLES IS FULL THDS. 2-3 IMP THDS. BEYOND PERMISSIBLE.	☐
EXTERNAL THREAD LENGTH SHOWN INCLUDES 2 IMPERFECT THREADS MAX.	☐
DO NOT CADMIUM PLATE & PAINT HOLES OR SURFACES MARKED WITH DOUBLE ASTERISK.	☐
MISMATCH STEP OF ± .005 PERMISSIBLE DUE TO CHANGE OF CUTTERS AT INSIDE INTERSECTING SURFACES.	☐
DIAMETERS MARKED MUST BE CONCENTRIC WITHIN FULL INDICATOR READING	☐
HOLES MUST BE KEPT FREE OF CHROME PLATING SOLUTION.	☐
ALL DIMENSIONS SHOWN TO BE MET AFTER CADMIUM PLATING. THICKNESS OF PLATE .0003 MIN. TO .0005 MAX. MIN. THICKNESS TO BE .0002 ON THREADED AREAS. NO ALLOWANCE FOR PLATING IN HOLES	☐
125 √ SURFACE ROUGHNESS INCLUDING REAMED HOLES PER MIL-STD-10	☐
200 √ FOR ALL DRILLED HOLES	☐
REMOVE ALL BURRS. BREAK ALL EDGES .015-.031	☐
INSPECTION INFORMATION MINIMUM PERMISSIBLE AVERAGE EDGE DISTANCE MARKED IS	☐
SYMBOL √ DENOTES SURFACE TO BE MACHINED	☐
UNLESS OTHERWISE SPECIFIED TOLERANCE ON FLANGES IS ± 1/32	☐
LENGTHS OF AN, NAS & MS AL ALY RIVETS SHORTER THAN 1 INCH ARE NOT SPECIFIED.	☐
TOLERANCE ON LOFTED DELINEATIONS IS	☐

DWG SIZE 34 X

PRINTING INFO ONLY
FULL SIZE SHEET AREA (36 X)= SQ. FT.
1/2 SIZE SHEET AREA (1/4 OF FULL)= SQ. FT.

PRINT TRIM LINE

LDW280-51742

NOTES

1. NO TOOLING HOLES PERMITTED IN PARTS

LDW280-51742

02/02 **NAS 9-1100**

LAYOUT RELEASE MAY BE REDRAWN
ON PRODUCTION FORMAT

	GRUMMAN AIRCRAFT ENGRG CORP., BETHPAGE, L. I., NEW YORK			
	SIZE J	CODE IDENT NO. 26512	LDW280-51742	
LM MODEL OR END ITEM	SCALE 1/2			SHEET 3.00

B

ENG 32.1 REV 3-65

GRUMMAN AIRCRAFT ENGINEERING CORP.
CODE IDENT NO. 26512
ENGINEERING ORDER

DWG. NO. LDW 280-51742
EO NO. A1
CONTROL INFO NO. LDW280A-4975

IN B/M & FIELD REPLACE -5 ASSY WITH -7ASSY

DETAIL SPEC REQ		CL II ENGRG CHG	✓	CL I ENGRG CHG	

REASON FOR EO: TO CORRECT DRAWING

DESCRIPTION OF EO: IN B/M & FIELD REPLACE -5ASSY WITH 1 -7 ASSY

GAEC EO RELEASE C 1/19/67

MODEL	EFFECTIVITY: PROCURING ACTIVITY NO.	EFFECTIVITY: GAEC UNIT NO.	EFFECTIVITY: SUB CONTR UNIT NO.
LM		LM-1(31)	

DRAWING CHANGE REQD: REVISE DWG	DRAWING CHANGE REQD: RECORD EO	DISPOSITION OF PARTS: REWORK	DISPOSITION OF PARTS: SCRAP	APPROVED BY / DATE	VDI	SUPPORT	RELIAB. GROUP	GROUP LEADER	STRESS GROUP	LIAISON ENGRG	PROJ ENGRG	~~CONT~~
✓			-5	5	1/16/67			1/16/67	1/17/67		1/18/67	1/19/67

PRIORITY	DRAWING TITLE	DRAWING NO.	EO NO.
C	SHIELD ASSY~D/S~QUAD II~SEQ PLUME IMPINGEMENT-UPPER THERMAL	LDW280-51742	A1

ISSUED BY F. MADDEN / J. STRAKOSCH SECTION VEH DES INT. GROUP NO. 335 PL 35

01

NAS 9-1100

CHG.
ENG 32.1 REV 3-65

*

GRUMMAN AIRCRAFT ENGINEERING CORP.
CODE IDENT NO. 26512
ENGINEERING ORDER

DWG. NO. LDW280-51742
EO NO. A2
CONTROL INFO NO. LM-2-3258

THIS EO CANCELS EO-A1

2

DETAIL SPEC REQ	☐	CL II ENGRG CHG	☐	CL I ENGRG CHG	☐

REASON FOR EO: ASSY TO BE REPLACED PER EO-A1 IS NON-EXISTANT

DESCRIPTION OF EO: THIS EO CANCELS EO-A1

GAEC EO RELEASE: C (P) LE

MODEL	EFFECTIVITY		
	PROCURING ACTIVITY NO.	GAEC UNIT NO.	SUB CONTR UNIT NO.
LM		LM-1(31)	

DRAWING CHANGE REQD		DISPOSITION OF PARTS		APPROVED BY							
									caw		RHC(E)
				DATE	2/20				1/25/67	1/25/67	1-28-67	1/25/67
✓			-7-	-6-	VDI						
REVISE DWG	RECORD EO	REWORK	SCRAP			SUPPORT	RELIAB. GROUP	GROUP LEADER	STRESS GROUP	LIAISON ENGRG	PROJ ENGRG

PRIORITY: C
DRAWING TITLE: SHIELD ASSY~D/S~QUAD II~SEQ PLUME IMPINGEMENT UPPER THERMAL
DRAWING NO.: LDW280-51742
EO NO.: A2

ISSUED BY LIAISON J. MALONEY 1/25/67 X3604 SECTION V.D.I. GROUP NO. 335 PL 35

01 NAS 9-1100

B

ENG 32.2 REV 3-65

GRUMMAN AIRCRAFT ENGINEERING CORP.
CODE IDENT NO. 26512
ENGINEERING ORDER *

DWG. NO. LDW280-51742 | EO NO. A3
CONTROL INFO NO. LDW280A-5809

IN F/D & L/M FOR-3 SHIELD ASSY REMOVE LDW280-51744-3 SKIN ASSY & ADD LDW280-51744-9 SKIN ASSY. ADD GS11K-1-8, GS11K-3-112, GS11K-1-6(3), GS11K-3-082(3), GS11K-1-38, GS11K-3-580 & GS577A-1 AS SHOWN

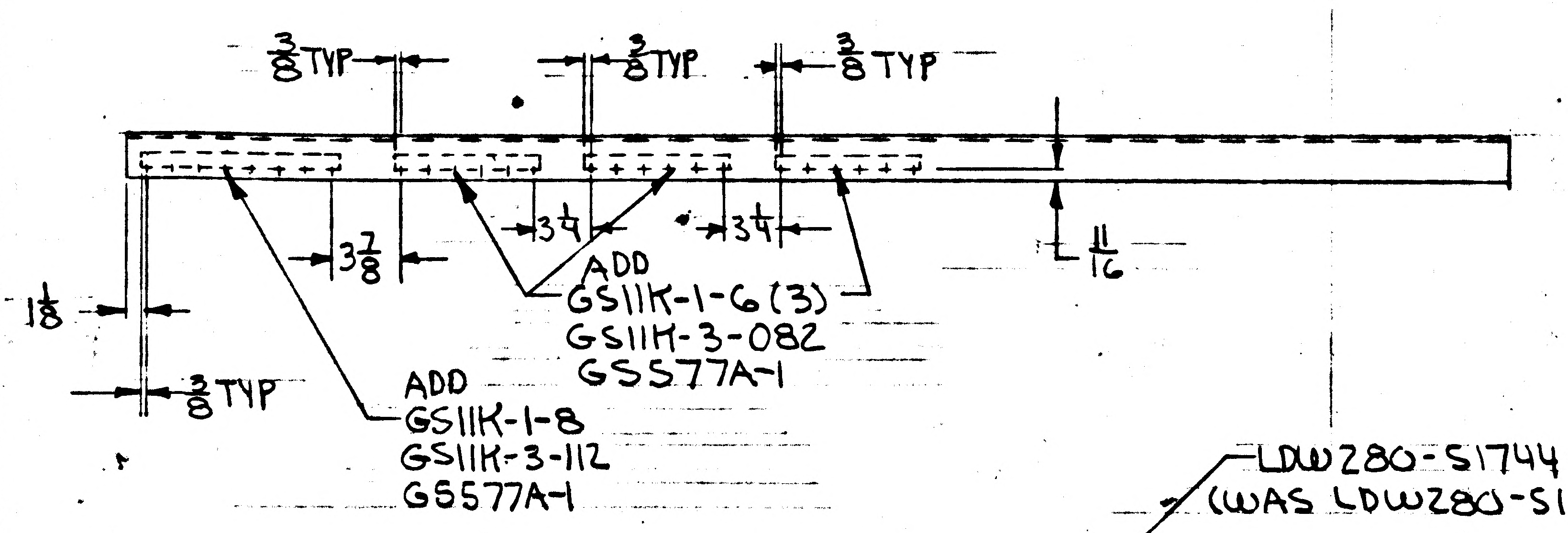
3/8 TYP
3/8 TYP
3/8 TYP
3 7/8
3 1/4
3 1/4
11/16
1 1/8
3/8 TYP
ADD
GS11K-1-6 (3)
GS11K-3-082
GS577A-1
ADD
GS11K-1-8
GS11K-3-112
GS577A-1

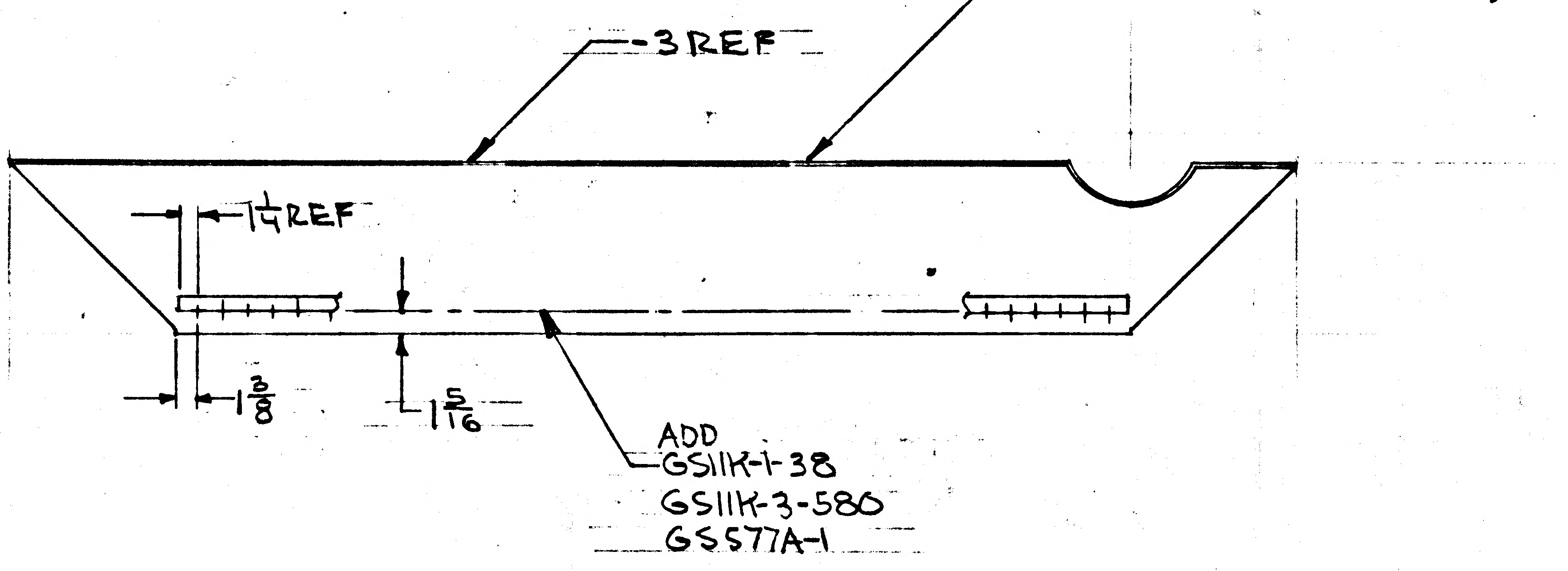
LDW280-51744-9
(WAS LDW280-51744-3)
-3 REF
1 1/4 REF
1 3/8
1 5/16
ADD
GS11K-1-38
GS11K-3-580
GS577A-1

IN F/D & L/M FOR-1 SHIELD ASSY ADD GS11K-2-580 & GT835P-8 AS SHOWN

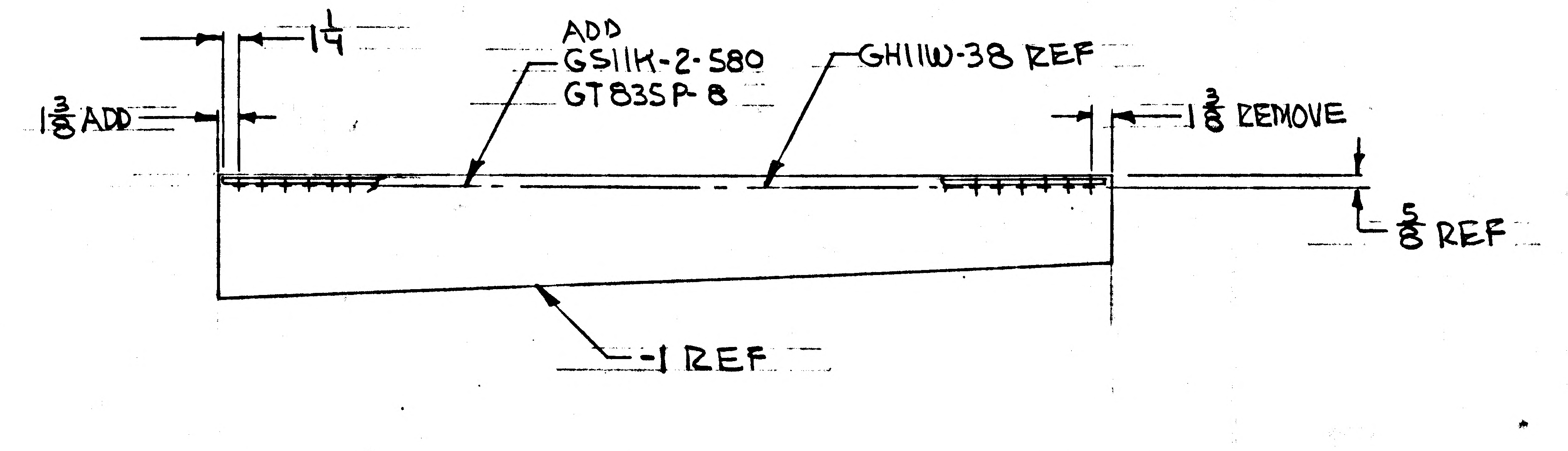
1 1/4
ADD
GS11K-2-580
GT835P-8
GH11W-38 REF
1 3/8 ADD
1 3/8 REMOVE
5/8 REF
-1 REF

ADD NOTE* FABRICATE PER LPC280-25 (USE NEXT AVAILABLE NOTE No)

(5)

DETAIL SPEC REQ	☐	CL II ENGRG CHG	☑	CL I ENGRG CHG	☐ LCR-928

REASON FOR EO: LCR928 · TO IMPROVE PAINT ADHESION DIM CHANGE TO AGREE WITH SHOP TEMPLATE

DESCRIPTION OF EO: FOR-3 REMOVED LDW280-51744-3 & ADDED LDW280-51744-9 & GS11K-1--, GS11K-3-- & GS577A-1. FOR-1 ADDED GS11K-2-- & GT835P-8 RELOCATED 1 3/8 DIM. ADDED NOTE: ~~5K~~

C) GAEC C EO RELEASE: LE 3/14/7

MODEL	PROCURING ACTIVITY NO.	GAEC UNIT NO.	SUB CONTR UNIT NO.
LM		LM-1(31)	

DRAWING CHANGE REQD		DISPOSITION OF PARTS	
REVISE DWG	RECORD EO	REWORK	SCRAP
✓		✓	

APPROVED BY				GROUP LEADER	STRESS GROUP	LIAISON ENGRG	PROJ ENGRG	
DATE	3/7/67			3/1/67	3/8/67		3-13-67	3/14/67
5	VD1	SUPPORT	RELIAB. GROUP					

PRIORITY	DRAWING TITLE	DRAWING NO.	EO NO.
C	SHIELD ASSY QUAD II SEQ DES STAGE UPPER	LDW280-51742	A3

ISSUED BY G. ZEMAN / J. STRAKOSCH SECTION VD1 GROUP NO. 335 PL 35

NAS 9-1100

B

ENG 32.2 REV 3-65

GRUMMAN AIRCRAFT ENGINEERING CORP.
CODE IDENT NO. 26512
ENGINEERING ORDER *

DWG. NO. LEO 280 | EO NO. 589
CONTROL INFO NO. LDW280A6772

ON THE DWGS LISTED BELOW IN L/M & F/D AT INSTL OF ALL GS11K-1--- TAB STRIPS REMOVE GS577A-1 & ADD GS577A-4 STAPLE

DWG No *	EFF	CHANGE No	TITLE
LDW280-28559-5	LM-1(31)	B3	
LDW280-28665-5	LM-1(31)	B10	
LDW280-28733-3	LM-1(31) THRU LM-3(33)	A4	
LDW280-28736-5 & -7	LM-1(31) THRU LM-15(45)	A5	
LDW280-28748-11, -13 & -15	LM-1(31) THRU LM-15(45)	A10	
LDW280-28754-7 & -9	LM-1(31) THRU LM-15(45)	A9	
LDW280-28758-5 & -7	LM-1(31) THRU LM-3(33)	B3	SEE
LDW280-28770-5	LM-1(31) THRU LM-15(45)	B5	
LDW280-28773-11 & -13	LM-1(31) THRU LM-3(33)	A8	
LDW280-28804-5	LM-1(31) THRU LM-15(45)	A6	
LDW280-28817-7	LM-1(31) THRU LM-15(45)	A4	DWG
LDW280-51742-3	LM-1(31)	A4	
LDW280-51831-1	LM-1(31) THRU LM-15(45)	A2	
LDW280-52739-3	LM-2(32) THRU LM-15(45)	A2	
LDW280-52742-1, -3, -5, -7, -9 & -11	LM-2(32) THRU LM-15(45)	A7	
LDW280-52763-9 & -11	LM-2(32) THRU LM-15(45)	A5	
LDW280-52767-1 & -3	LM-2(32) THRU LM-15(45)	B3	
LDW280-53600-3 & -5	LM-3(33)	A3	
LDW280-54605-1	LM-4(34) THRU LM-15(45)	A2	
LDW280-54714-1	LM-4(34) THRU LM-15(45) & DES. VER. 70	A5	
LDW280-54733-1	LM-4(34) THRU LM-15(45)	A2	
LDW280-54758-1 & -3	LM-4(34) THRU LM-15(45)	A1	
LDW280-54784-1	LM-4(34) THRU LM-15(45) & DES. VER. 70	A2	
LSK280-10993-17, -19 & -21	DES. VER. 70	A4	

CDR = 5/10/67

DETAIL SPEC REQ	☐	CL II ENGRG CHG	☑	CL I ENGRG CHG	☐ LCD 928

REASON FOR EO: TO PROVIDE CORRECT STAPLE CALLOUT

DESCRIPTION OF EO: ON * REPLACED GS577A-1 WITH GS577A-4

Ⓡ GAEC EO RELEASE: 2 C JK 5/9/67

MODEL	EFFECTIVITY: PROCURING ACTIVITY NO.	GAEC UNIT NO.	SUB CONTR UNIT NO.
LM		(NOTED ABOVE)	

DRAWING CHANGE REQD: REVISE DWG ✓ | RECORD EO

DISPOSITION OF PARTS: REWORK ✓ | SCRAP

APPROVED BY / DATE: 5/4/67 | 5 | VDI

SUPPORT	RELIAB. GROUP	GROUP LEADER	STRESS GROUP	LIAISON ENGRG	PROJ ENGRG
			5/4/67		5/6/67 5/8/67

PRIORITY: C

DRAWING TITLE: NOTED

DRAWING NO.: LEO280

EO NO.: 589

ISSUED BY G. ZEMAN / J. STRAKOSCH SECTION VDI GROUP NO. 335 PL 25

01
NAS 9-1100

my C

ENG 32.1 REV 3-65

GRUMMAN AIRCRAFT ENGINEERING CORP.
CODE IDENT NO. 26512
ENGINEERING ORDER

DWG. NO. LDW280-51742		EO NO. A5
CONTROL INFO NO. LM 29-1101		

ON -1 & -3 ASS'Y

LDW280-17938-13 S/B LDW280-17932-13

DETAIL SPEC REQ		CL II ENGRG CHG		CL I ENGRG CHG		29

REASON FOR EO: INCORRECT CALLOUT

DESCRIPTION OF EO: ON -1 & -3 ASSY LDW280-17932-13 WAS LDW280-17938-13

Ⓡ GAEC EO RELEASE: JK

MODEL	EFFECTIVITY: PROCURING ACTIVITY NO.	GAEC UNIT NO.	SUB CONTR UNIT NO.
LM	NOT REQ'D		

DRAWING CHANGE REQD		DISPOSITION OF PARTS	
REVISE DWG	RECORD EO	REWORK	SCRAP
✓			✓

	VDI	SUPPORT	RELIAB. GROUP	GROUP LEADER	STRESS GROUP	LIAISON ENGRG	PROJ ENGRG	~~CONT~~
APPROVED BY	Jaf			—	~	W.J.	Jaf	
DATE	11/13/67			—	~	11/9/67	11/13/67	11-8-67
9/5/67								

PRIORITY	DRAWING TITLE	DRAWING NO.	EO NO.
E29	SHIELD ASSY ~ D/S ~ QUAD II ~ SEQ ~ PLUME IMPINGEMENT UPPER THER. SHIELD	LDW280-51742	A5

ISSUED BY LIAISON (W. FRANK) X7930 SECTION YDI GROUP NO. 335 PL 25

01

NAS 9-1100

LDW280-51743

MODEL OR END ITEM	NEXT ASSY	MODULE OR SER NO.	REQD PER MODULE OR END ITEM
LM	LDW280-51742	LM-1(31)	7

PART NO.	GAEC SCH NO.
LDW280-51743-1E-3	522

2

SH REV STATUS: FOR DESCRIPTION OF REV SEE SUBQ SH	
SHEET	1.00
REV	
SHEET	2.00
REV	
SHEET	3.00
REV	

LAST SECT LTR USED: A

LAST DASH NO. USED: 5

GRUMMAN REL INFO

PRIM NO. 1E(001) 207 MP-14 11-22-6

UNLESS OTHERWISE SPECIFIED DIMENSIONS ARE IN INCHES.
TOLERANCE UNLESS SPECIFIED
FRACTIONS - DECIMALS – ANGLES
± 1/16 ±.020 ± 1/2°

ORIG DWG AUTH
DETAIL SPEC REQUIREMENT
CLASS II ENGRG CHANGE
CLASS I ENGRG CHANGE

CONTRACT NO. NAS 9-1100
LINE ITEM #1
DOCUMENTATION TYPE II

DRAWN BY
LAYOUT BY F. MADDEN
CHECKED BY
GRP LDR 11/17
VDI J. Pusateri 11/17/66
STRUCT W 11/18/66
STRUCT
WEIGHTS
RELIAB.
THERMO
PROJ ENGR R.M. Carfree (ES) 11-21-66
REL GROUP J Pagliaro 11/22/66

GRUMMAN AIRCRAFT ENGRG CORP
BETHPAGE, L. I., NEW YORK

FOIL ASSY~DESCENT STAGE
QUAD II~SEQ~PLUME IMPINGEMENT
UPPER THERMAL SHIELD

SIZE B
CODE IDENT NO. 26512
LDW280-51743
SCALE NONE
SHEET 1 OF 3

ENG 77.1 12-65

CZR 11-18-66

01 NAS 9-1100

C.L.	QTY PER ASSEMBLY						CODE IDENT	PART NO.	I&T	NOMENCLATURE OR DESCRIPTION	MATERIAL	GOVT SPEC	COML SPEC	STOCK SIZE	PROCESS SYM	FINISH NO.	ZONE
C					AS REQ'D	AS REQ'D	94725	MESH	E	INCONEL KNIT	SLEEVING	(SEE NOTE 3)					
C					1			LDW280-18125-21	E	COLLAR	SEE DWG						
C					1			LDW280-18125-19	↑	STRAP	SEE DWG						
C					1			LDW280-51743-5		FOIL ASSY (WELDED)	(MAKE FROM .0005 THICK X 12" WIDE, BRIGHT ROLLED NICKEL FOIL COMMERCIALLY PURE (INCO 200 OR EQUIV.) (SEE NOTE 2)						
C								LDW280-51743-3	↓	FOIL ASSY (WELDED)					FLW		
C						1		LDW280-51743-1	E	FOIL ASSY (WELDED)	MAKE FROM .0005 THICK X 12" WIDE, BRIGHT ROLLED NICKEL FOIL COMMERCIALLY PURE (INCO 200 OR EQUIV) - (SEE NOTE 2) -				FLW	NONE	
▨					-3	-1											

C.L. = CLEANLINESS LEVEL PER LSP 14-0011

SYM OR NO.	PROCESS OR FINISH	GRUMMAN SPEC OR MILITARY SPEC	SYM OR NO.	PROCESS OR FINISH	GRUMMAN SPEC OR MILITARY SPEC	SYM OR NO.	PROCESS OR FINISH	GRUMMAN SPEC OR MILITARY SPEC
						FLW	RESISTANCE	
							WELDING	LSP14-6102

I & T: IDENTIFICATION AND TRACEABILITY IN ACCORDANCE WITH : NONE

GRUMMAN AIRCRAFT ENGRG CORP, BETHPAGE, L. I., NEW YORK

SIZE	CODE IDENT NO.	
B	26512	LDW280-51743

SCALE NONE

SHEET 2.00

ENG 77.2 7-65

01

NAS 9-1100

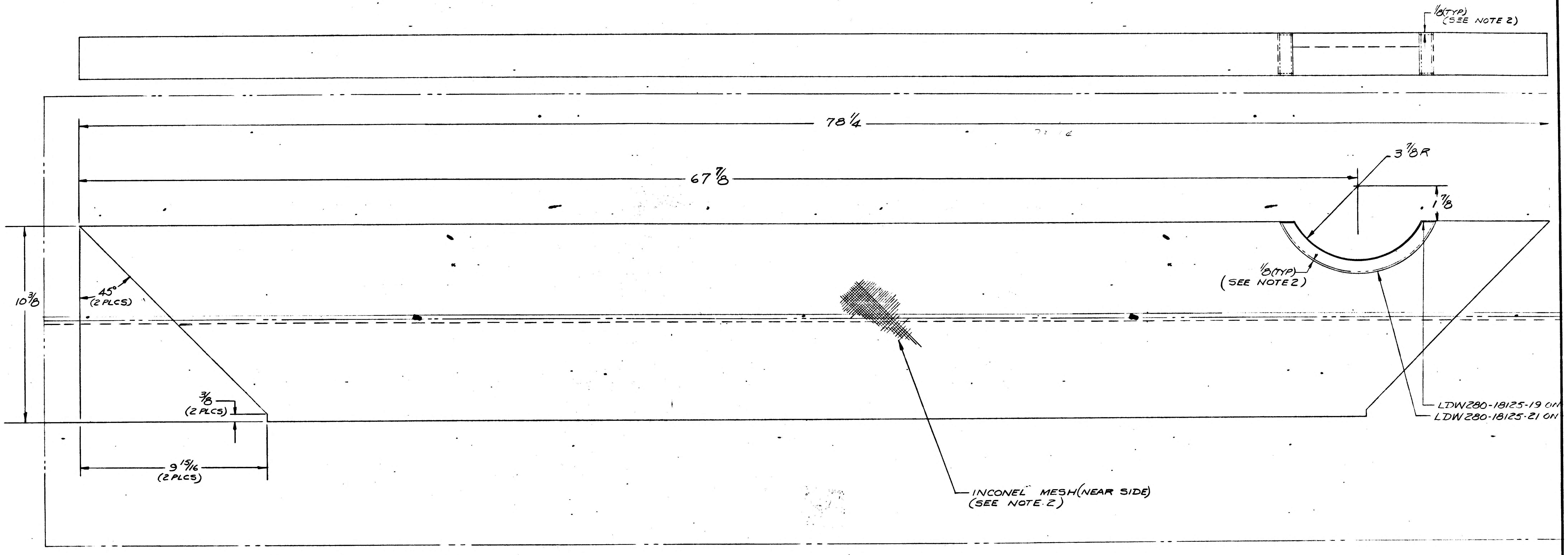
1/8 (TYP) (SEE NOTE 2)
78 1/4
67 7/8
3 7/8 R
1 7/8
10 3/8
45° (2 PLCS)
1/8 (TYP) (SEE NOTE 2)
3/8 (2 PLCS)
9 15/16 (2 PLCS)
LDW280-18125-19 ON
LDW280-18125-21 ON
INCONEL MESH (NEAR SIDE) (SEE NOTE 2)

LDW280-51743-5 ASSY (WELDED & TRIM)
LDW280-51743-3 ASSY

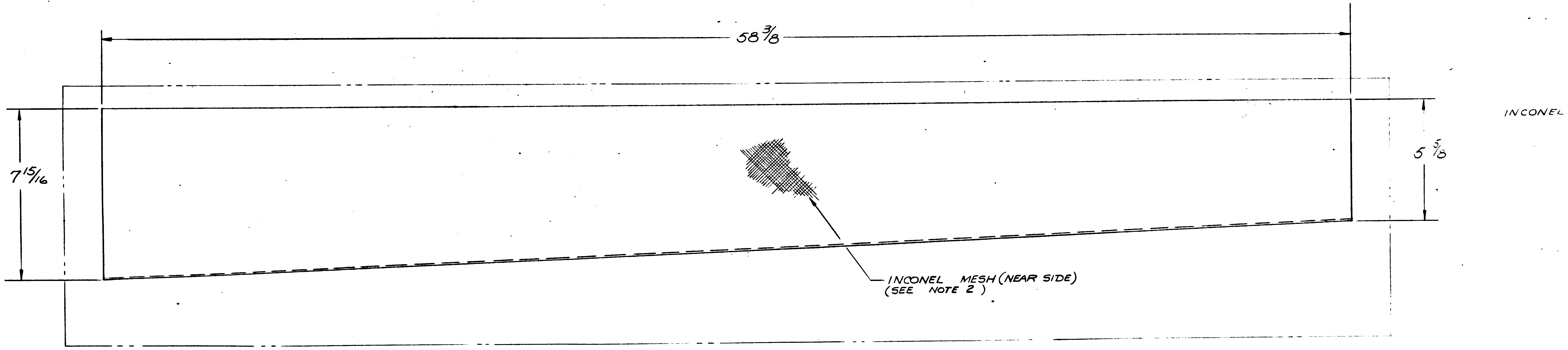
58 3/8
7 15/16
5 5/8
INCONEL MESH (NEAR SIDE) (SEE NOTE 2)
INCONEL

LDW280-51743-1 ASSY (WELDED & TRIM)

01/02 NAS 9-1100

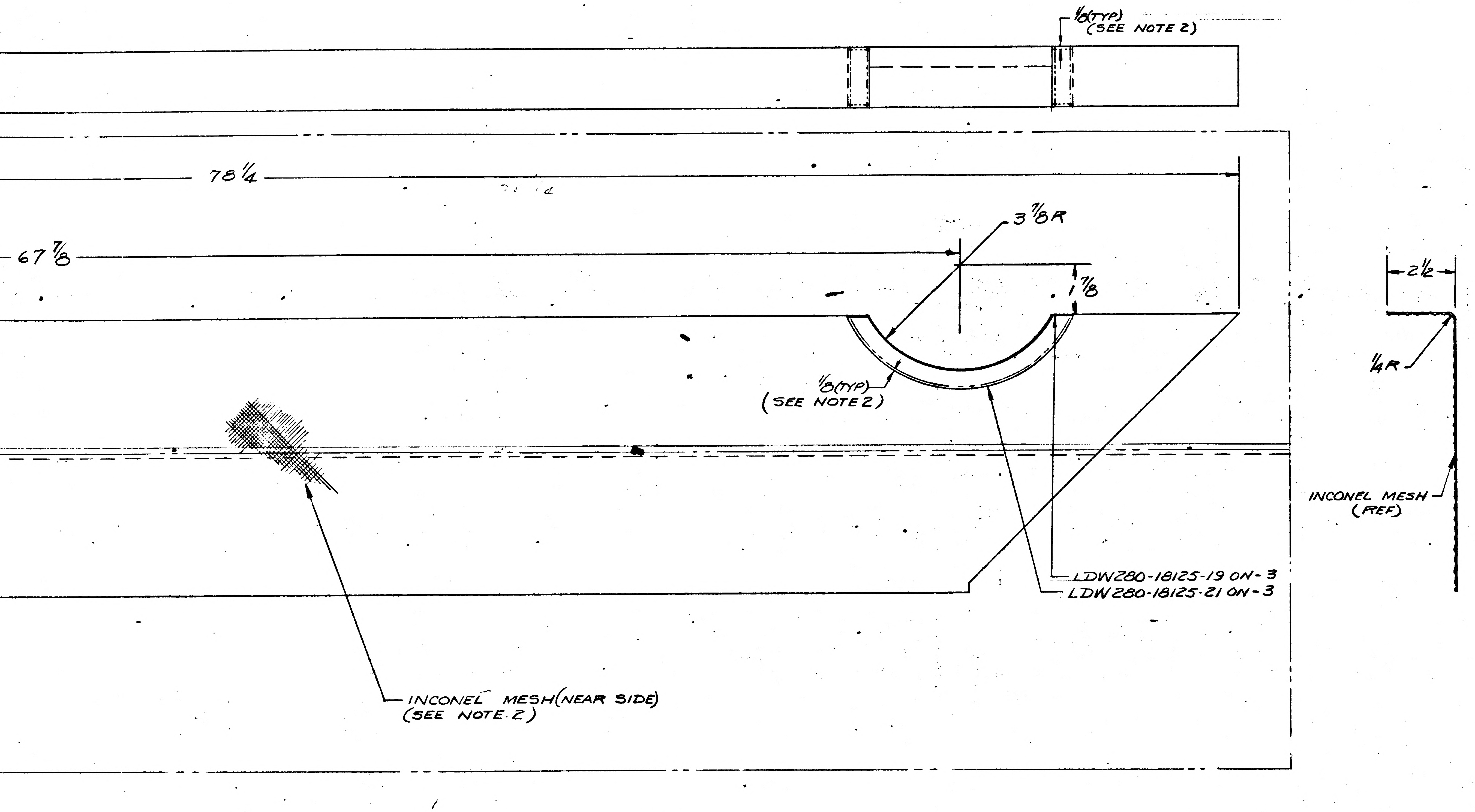

LDW280-51743-5 ASSY (WELDED & TRIM)
LDW 280-51743-3 ASSY

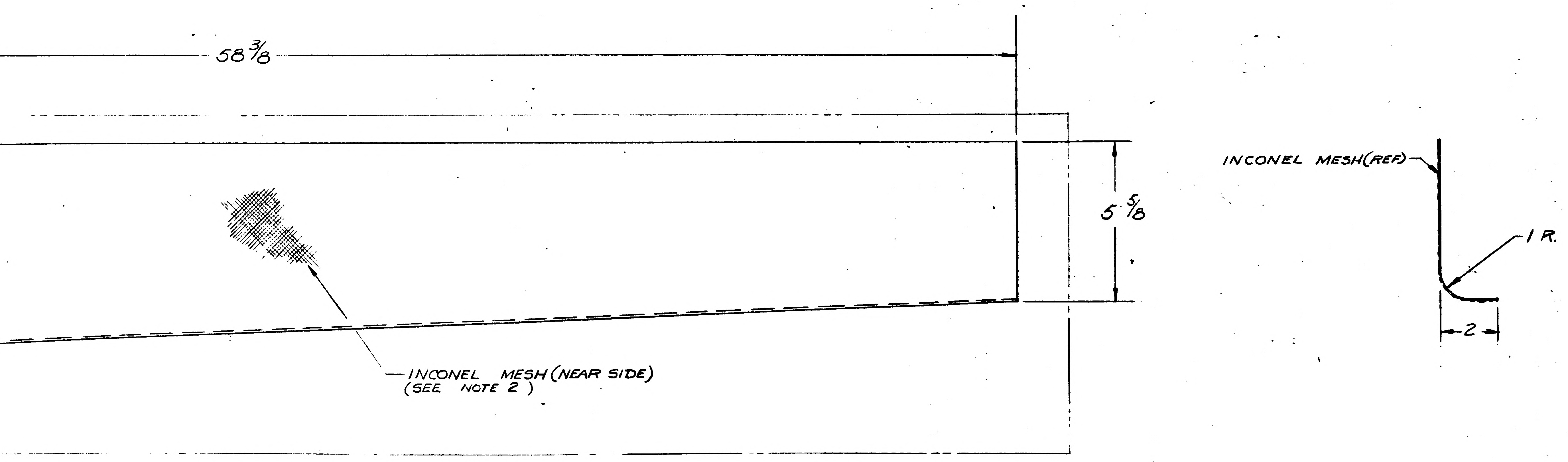

LDW280-51743-1 ASSY (WELDED & TRIM)

MANUFACTURING OPERATIONS UNLESS OTHERWISE SPECIFIED NOTES CHECKED √ APPLY TO THIS DWG.	
PART NUMBER AND ALL OTHER MARKINGS IN REGION MARKED ▭ USE BOTH SIDES IF NECESSARY.	
FILLET AND INSIDE CORNER RADII TOLERANCES .016R TO .062R ± .010 .063R TO .250R ± .015 OVER .250R ± .030	
DEPTH SHOWN FOR TAPPED HOLES IS FULL THDS. 2-3 IMP THDS. BEYOND PERMISSIBLE.	
EXTERNAL THREAD LENGTH SHOWN INCLUDES 2 IMPERFECT THREADS MAX.	
DO NOT CADMIUM PLATE & PAINT HOLES OR SURFACES MARKED WITH DOUBLE ASTERISK.	
MISMATCH STEP OF ± .005 PERMISSIBLE DUE TO CHANGE OF CUTTERS AT INSIDE INTERSECTING SURFACES.	
DIAMETERS MARKED MUST BE CONCENTRIC WITHIN FULL INDICATOR READING	
HOLES MUST BE KEPT FREE OF CHROME PLATING SOLUTION.	
ALL DIMENSIONS SHOWN TO BE MET AFTER CADMIUM PLATING. THICKNESS OF PLATE .0003 MIN. TO .0005 MAX. MIN. THICKNESS TO BE .0002 ON THREADED AREAS. NO ALLOWANCE FOR PLATING IN HOLES	
125 √ SURFACE ROUGHNESS INCLUDING REAMED HOLES PER MIL-STD-10	
200 √ FOR ALL DRILLED HOLES	
REMOVE ALL BURRS. BREAK ALL EDGES .015-.031	
INSPECTION INFORMATION MINIMUM PERMISSIBLE AVERAGE EDGE DISTANCE MARKED IS	
SYMBOL √ DENOTES SURFACE TO BE MACHINED	
UNLESS OTHERWISE SPECIFIED TOLERANCE ON FLANGES IS ± 1/32	
LENGTHS OF AN, NAS & MS AL ALY RIVETS SHORTER THAN 1 INCH ARE NOT SPECIFIED.	
TOLERANCE ON LOFTED DELINEATIONS IS	

DWG SIZE 34 X

PRINTING INFO ONLY
FULL SIZE SHEET AREA (36 X)= SQ. FT.
1/2 SIZE SHEET AREA (1/4 OF FULL)= SQ. FT.

PRINT TRIM LINE

LDW280-51743

NOTES

1. NO TOOLING HOLES PERMITTED IN PARTS
2. FABRICATE PER LPC 280-19
3. INCONEL KNITTED SLEEVING MAYBE PURCHASED FROM MONTGOMERY METAL FABRIC CO
59 CANEL ST, WINDSOR LOCKS, CONN.
(CODE IDENT 94725)

02/02 NAS 9-1100

LAYOUT RELEASE MAYBE REDRAWN ON PRODUCTION FORMAT

	GRUMMAN AIRCRAFT ENGRG CORP., BETHPAGE, L. I., NEW YORK		
LM	SIZE J	CODE IDENT NO. 26512	LDW280-51743
MODEL OR END ITEM	SCALE 1/2		SHEET 3

THIS IS AN ORIGINAL DRAWING

ENG 73.7 6-64 OGILVIE PRESS, INC., BROOKLYN 17, N. Y. ULTRAVEL NO. 40000

LDW280-51744

MODEL OR END ITEM	NEXT ASSY	MODULE OR SER NO.	REQD PER MODULE OR END ITEM
PART NO.		GAEC SCH NO.	

MODEL OR END ITEM	NEXT ASSY	MODULE OR SER NO.	REQD PER MODULE OR END ITEM
PART NO.		GAEC SCH NO.	

MODEL OR END ITEM	NEXT ASSY	MODULE OR SER NO.	REQD PER MODULE OR END ITEM
LM	LDW280-51742	LM-1 (31)	1 EA
PART NO. LDW280-51744-1&-3		GAEC SCH NO. 522	

2

SH REV STATUS: FOR DESCRIPTION OF REV SEE SUBQ SH									
SHEET	1.00								
REV									
SHEET	2.00								
REV									
SHEET	3:00								
REV									

LAST SECT LTR USED	A	GRUMMAN REL-INFO		
LAST DASH NO. USED	-5	PRIM NO.	LE(001)	
		207	MP-14	11-22-6

UNLESS OTHERWISE SPECIFIED DIMENSIONS ARE IN INCHES.
TOLERANCE UNLESS SPECIFIED
FRACTIONS - DECIMALS – ANGLES
±1/16 ±.020 ±1/2
ORIG DWG AUTH
DETAIL SPEC REQUIREMENT
CLASS II ENGRG CHANGE
CLASS I ENGRG CHANGE

CONTRACT NO. NAS 9-1100 | LINE ITEM #1 | DOCUMENTATION TYPE II

DRAWN BY		RELIAB	
LAYOUT BY	F. MADDEN	THERMO	M. Sotor 11-18-66
CHECKED BY			
GRP LDR			
VDI	J. Pusateri 11/17/66		
STRUCT	11/18/66	PROJ ENGR	R.M. Carbee (EV) 11-21-66
STRUCT		REL GROUP	J. Paghani 11/22/66
WEIGHTS			

GRUMMAN AIRCRAFT ENGRG CORP
BETHPAGE, L. I., NEW YORK

SKIN ASSY~DESCENT STAGE
QUAD II~SEQ~PLUME IMPINGEMENT
UPPER THERMAL SHIELD

SIZE	CODE IDENT NO.	
B	26512	LDW280-51744
SCALE NONE		SHEET 1 OF 3

ENG 77.1 12-65

CDK 11-18-66

01 NAS 9-1100

CL				-5	-3	-1	CODE IDENT	PART NO.	I&T	NOMENCLATURE OR DESCRIPTION	MATERIAL	GOVT SPEC	COML SPEC	STOCK SIZE	PROCESS SYM	FINISH NO.	ZONE
C					AS REQ'D			GT15B	E	TAPE	STD PART						
C					1			LDW280-18130-17		ANGLE	SEE DWG						
C					1			LDW280-18130-15		ANGLE	SEE DWG						
C					1			LDW280-51744-5		SKIN ASSY(WELDED	MAKE FROM .00125 THICK X 12" WIDE INCONEL 600 FOIL PER AMS 5540E. SEE NOTE 2				FLW		
C								LDW280-51744-3		SKIN ASSY(WELDED)					FLW		
C						1		LDW280-51744-1	E	SKIN ASSY (WELDED	MAKE FROM .00125 THICK X 12" WIDE INCONEL 600 FOIL PER AMS 5540E, SEE NOTE 2				FLW	NONE	
▨	QTY PER ASSEMBLY																

C.L = CLEANLINESS LEVEL PER LSP 14-0011

SYM OR NO.	PROCESS OR FINISH	GRUMMAN SPEC OR MILITARY SPEC	SYM OR NO.	PROCESS OR FINISH	GRUMMAN SPEC OR MILITARY SPEC	SYM OR NO.	PROCESS OR FINISH	GRUMMAN SPEC OR MILITARY SPEC
						FLW	RESISTANCE WELDING	LSP 14-6102

I & T: IDENTIFICATION AND TRACEABILITY IN ACCORDANCE WITH : NONE

GRUMMAN AIRCRAFT ENGRG CORP, BETHPAGE, L. I., NEW YORK

SIZE	CODE IDENT NO.	
B	26512	LDW280-51744

SCALE NONE SHEET 2.00

ENG 77.2 7-66

01 NAS 9-1100

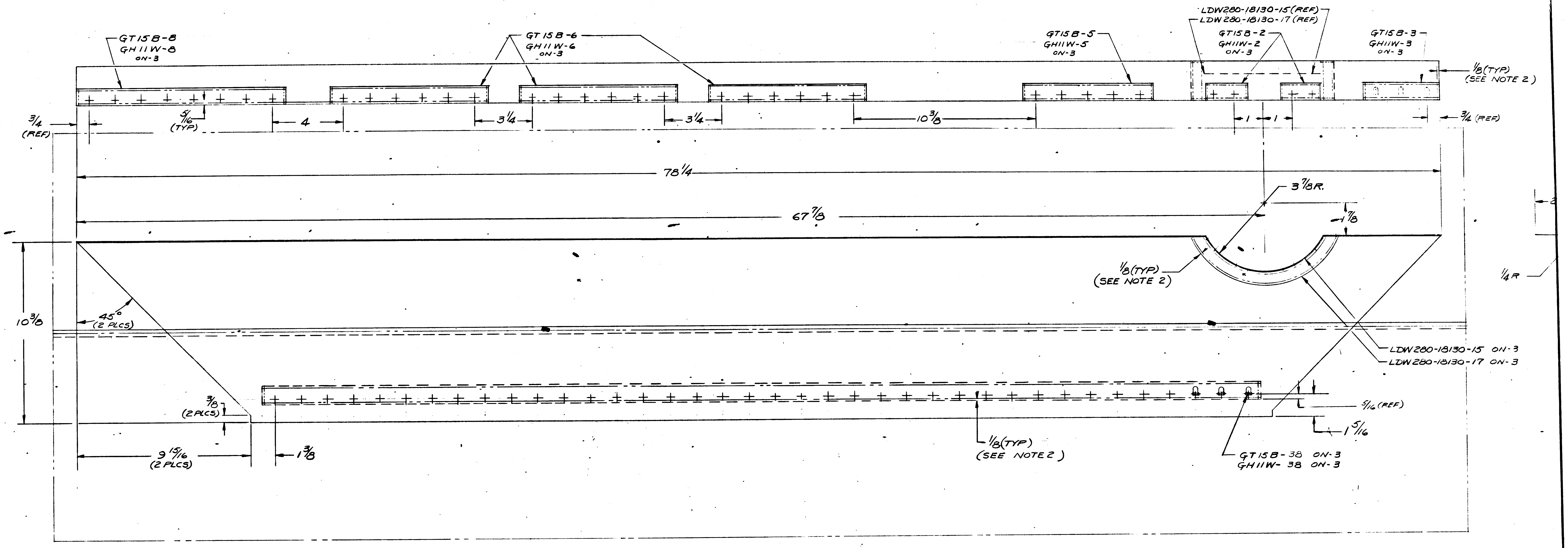
GT15B-8
GH11W-8
ON-3
GT15B-6
GH11W-6
ON-3
GT15B-5
GH11W-5
ON-3
LDW280-18130-15 (REF)
LDW280-18130-17 (REF)
GT15B-2
GH11W-2
ON-3
GT15B-3
GH11W-3
ON-3
1/8 (TYP)
(SEE NOTE 2)
3/4
(REF)
5/16
(TYP)
4
3 1/4
3 1/4
10 3/8
1
1
3/4 (REF)
78 1/4
3 7/8 R.
67 7/8
1 7/8
1/8 (TYP)
(SEE NOTE 2)
10 3/8
45°
(2 PLCS)
LDW280-18130-15 ON-3
LDW280-18130-17 ON-3
3/8
(2 PLCS)
5/16 (REF)
1 5/16
9 15/16
(2 PLCS)
1 3/8
1/8 (TYP)
(SEE NOTE 2)
GT15B-38 ON-3
GH11W-38 ON-3

LDW280-51744-3 ASSY
LDW280-51744-5 ASSY (WELDED)

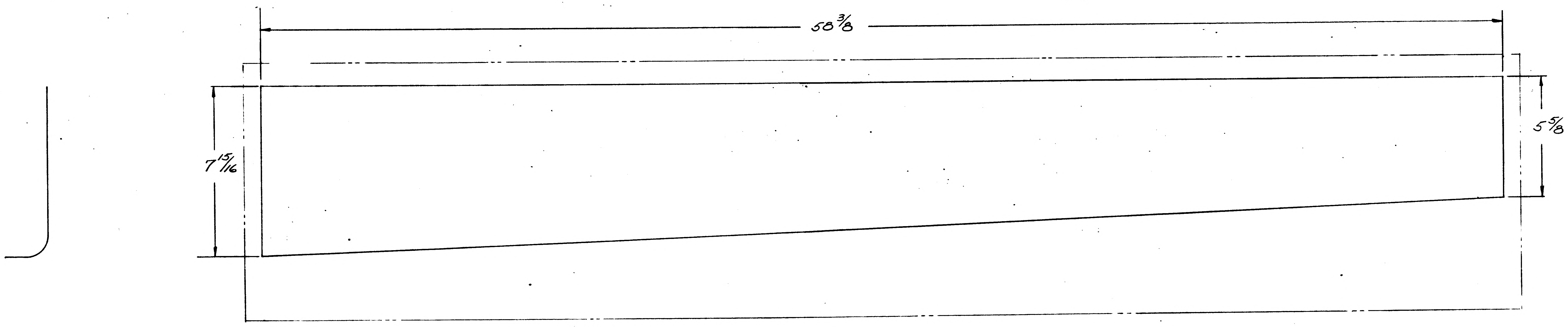
58 3/8
7 15/16
5 5/8

LDW280-51744-1 ASSY

01/02 NAS 9-1100

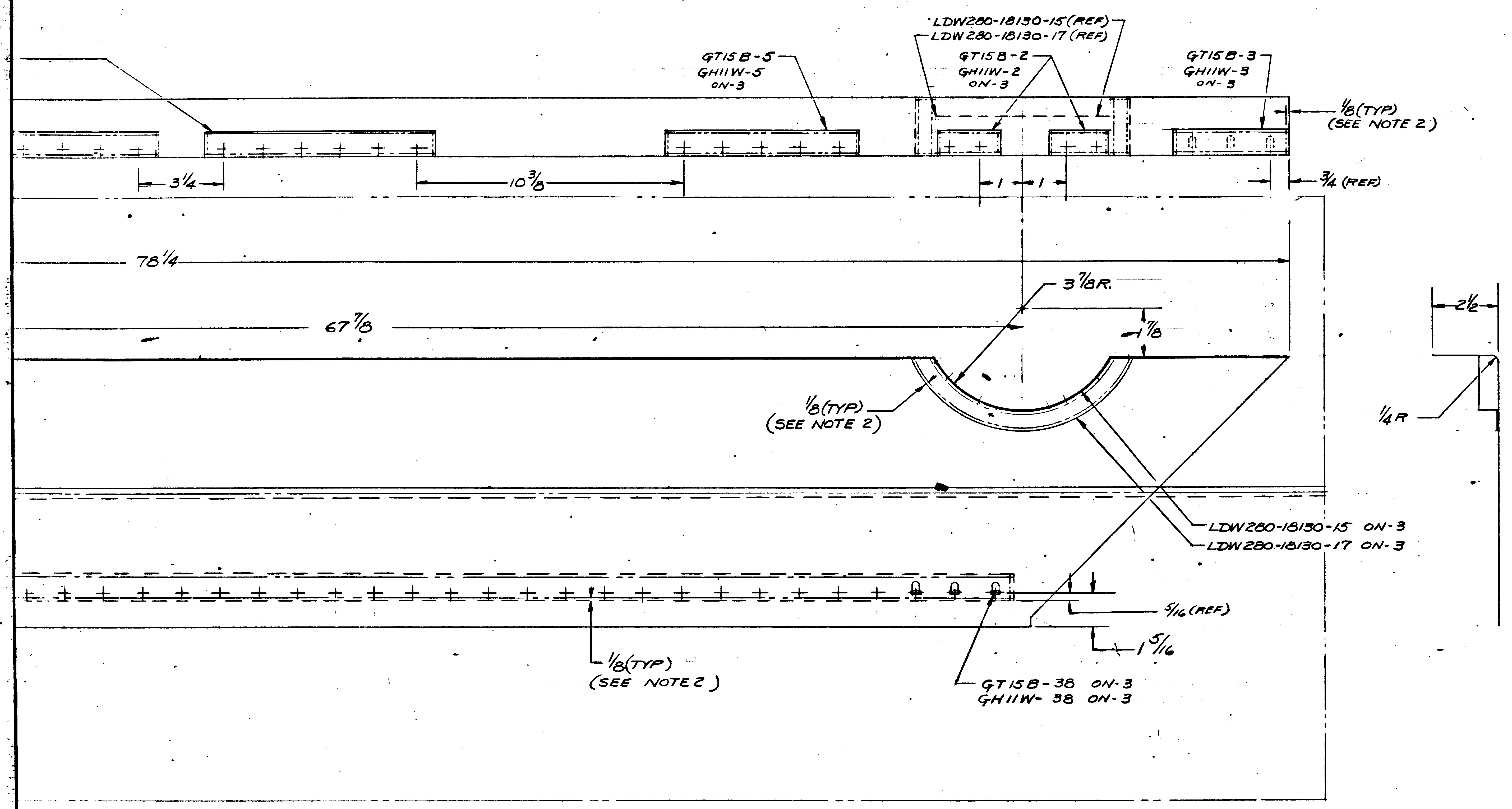
LDW280-18130-15 (REF)
LDW280-18130-17 (REF)
GT15B-5
GH11W-5
ON-3
GT15B-2
GH11W-2
ON-3
GT15B-3
GH11W-3
ON-3
1/8 (TYP)
(SEE NOTE 2)
3/4
10 3/8
1
1
3/4 (REF)
78 1/4
3 7/8 R.
67 7/8
1 7/8
2 1/2
1/4 R
1/8 (TYP)
(SEE NOTE 2)
LDW280-18130-15 ON-3
LDW280-18130-17 ON-3
5/16 (REF)
1 5/16
1/8 (TYP)
(SEE NOTE 2)
GT15B-38 ON-3
GH11W-38 ON-3

LDW280-51744-3 ASSY
LDW280-51744-5 ASSY (WELDED)

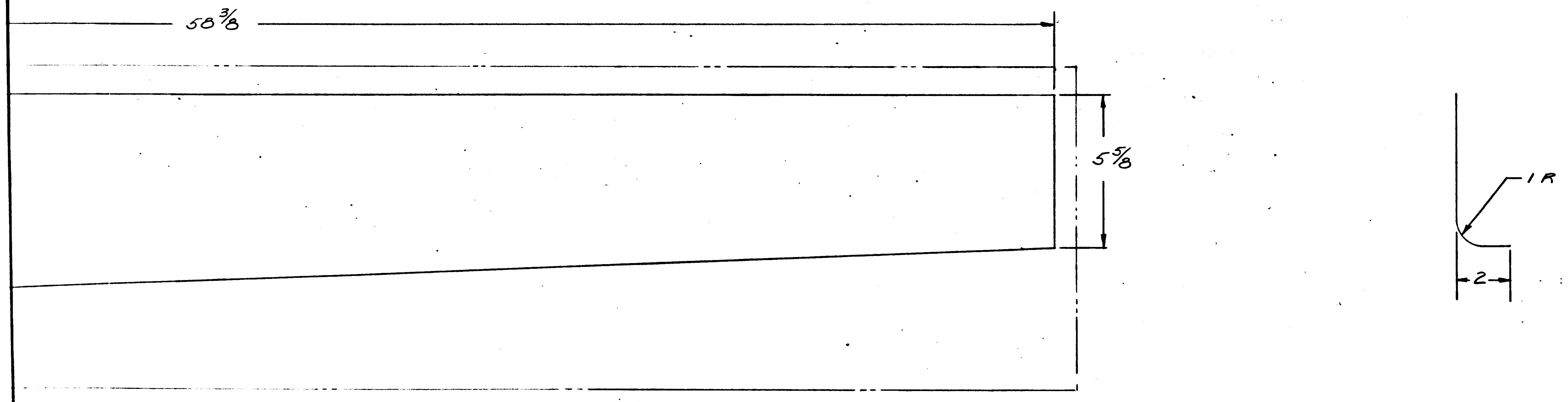
58 3/8
5 5/8
1 R
2

LDW280-51744-1 ASSY

MANUFACTURING OPERATIONS UNLESS OTHERWISE SPECIFIED NOTES CHECKED √ APPLY TO THIS DWG.	
PART NUMBER AND ALL OTHER MARKINGS IN REGION MARKED ▭ USE BOTH SIDES IF NECESSARY.	
FILLET AND INSIDE CORNER RADII TOLERANCES .016R TO .062R ± .010 .063R TO .250R ± .015 OVER .250R + .030	
DEPTH SHOWN FOR TAPPED HOLES IS FULL THDS. 2-3 IMP THDS. BEYOND PERMISSIBLE.	
EXTERNAL THREAD LENGTH SHOWN INCLUDES 2 IMPERFECT THREADS MAX.	
DO NOT CADMIUM PLATE & PAINT HOLES OR SURFACES MARKED WITH DOUBLE ASTERISK.	
MISMATCH STEP OF ± .005 PERMISSIBLE DUE TO CHANGE OF CUTTERS AT INSIDE INTERSECTING SURFACES.	
DIAMETERS MARKED MUST BE CONCENTRIC WITHIN FULL INDICATOR READING	
HOLES MUST BE KEPT FREE OF CHROME PLATING SOLUTION.	
ALL DIMENSIONS SHOWN TO BE MET AFTER CADMIUM PLATING. THICKNESS OF PLATE .0003 MIN. TO .0005 MAX. MIN. THICKNESS TO BE .0002 ON THREADED AREAS. NO ALLOWANCE FOR PLATING IN HOLES	
125√ SURFACE ROUGHNESS INCLUDING REAMED HOLES PER MIL-STD-10	
200√ FOR ALL DRILLED HOLES	
REMOVE ALL BURRS. BREAK ALL EDGES .015-.031	
INSPECTION INFORMATION MINIMUM PERMISSIBLE AVERAGE EDGE DISTANCE MARKED IS	
SYMBOL √ DENOTES SURFACE TO BE MACHINED	
UNLESS OTHERWISE SPECIFIED TOLERANCE ON FLANGES IS ± 1/32	
LENGTHS OF AN, NAS & MS AL ALY RIVETS SHORTER THAN 1 INCH ARE NOT SPECIFIED.	
TOLERANCE ON LOFTED DELINEATIONS IS	

DWG SIZE 34 X

PRINTING INFO ONLY
FULL SIZE SHEET AREA (36 X)= SQ. FT.
1/2 SIZE SHEET AREA (1/4 OF FULL)= SQ. FT.

PRINT TRIM LINE

LDW280-51744

NOTES

1. NO TOOLING HOLES PERMITTED IN PARTS
2. FABRICATE PER LPC280-19
3. FINISH IN ACCORDANCE WITH LPC 280-5
4. PAINTED SURFACES OF LDW280-51744-1 & -3 TO BE NEAR SIDE

02/02 NAS 9-1100

LAYOUT RELEASE MAYBE REDRAWN ON PRODUCTION FORMAT

LDW280-51744

	GRUMMAN AIRCRAFT ENGRG CORP., BETHPAGE, L. I., NEW YORK		
LM	SIZE J	CODE IDENT NO. 26512	LDW280-51744
MODEL OR END ITEM	SCALE 1/2		SHEET 2 [illegible]

THIS IS AN ORIGINAL DRAWING

ENG 73.7 6-64

B *

GRUMMAN AIRCRAFT ENGINEERING CORP.
CODE IDENT NO. 26512
ENGINEERING ORDER

ENG 32.1 REV 3-66

DWG. NO. LDW280-51744 | EO NO. A1
CONTROL INFO NO. LDW280M4574

ON-1 & -3 ADD SYMBOL INDICATING PERMISSIBLE DIRECTION OF LAP JOINT

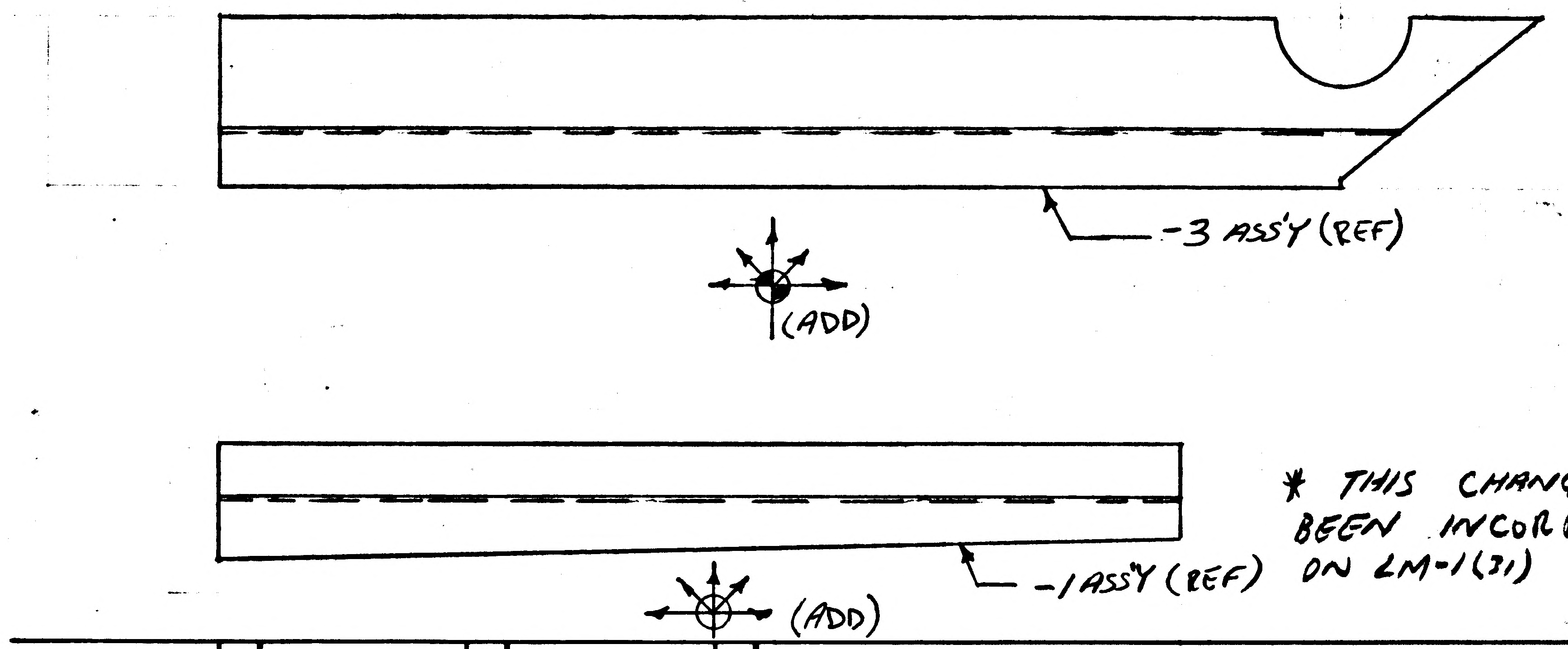

* THIS CHANGE HAS BEEN INCORPORATED ON LM-1(31)

2

DETAIL SPEC REQ		CL II ENGRG CHG		CL I ENGRG CHG	

REASON FOR EO: PROVIDE COMPLETE FABRICATION AND INSPECTION INFO

DESCRIPTION OF EO: ON-1 & -3 ADDED SYMBOL FOR LAP DIRECTION

GAEC EO RELEASE: 1/6/7

MODEL	EFFECTIVITY: PROCURING ACTIVITY NO.	EFFECTIVITY: GAEC UNIT NO.	EFFECTIVITY: SUB CONTR UNIT NO.
LM		LM-1 (31)	

DRAWING CHANGE REQD: REVISE DWG ✓ | RECORD EO
DISPOSITION OF PARTS: REWORK ✓ | SCRAP

		VD1	SUPPORT THERMO	RELIAB. GROUP	GROUP LEADER	STRESS GROUP	LIAISON ENGRG	PROJ ENGRG	
APPROVED BY	Jaf								
DATE	1/3/67	1/3/67			1/3/67	1/3/67		1-4-67	1/5/67
	5								

PRIORITY: C
DRAWING TITLE: SKIN ASSY D/S QUAD II SEQ PLUME IMPG. UPPR THERMAL SHIELD
DRAWING NO.: LDW280-51744
EO NO.: A1

ISSUED BY T. AMBROSIO/STRAKOSCH 1153 SECTION VD1 GROUP NO. 335 PL 35

01 NAS 9-1100

01 NAS 9-1100

B

GRUMMAN AIRCRAFT ENGINEERING CORP.
CODE IDENT NO. 26512
ENGINEERING ORDER

ENG 32.2 REV 3-65

DWG. NO. LDW280-51744		EO NO. A2
CONTROL INFO NO. LDW280A-4736		

ADDED -7 ASSY - IDENTICAL TO -3 ASSY EXCEPT AS SHOWN

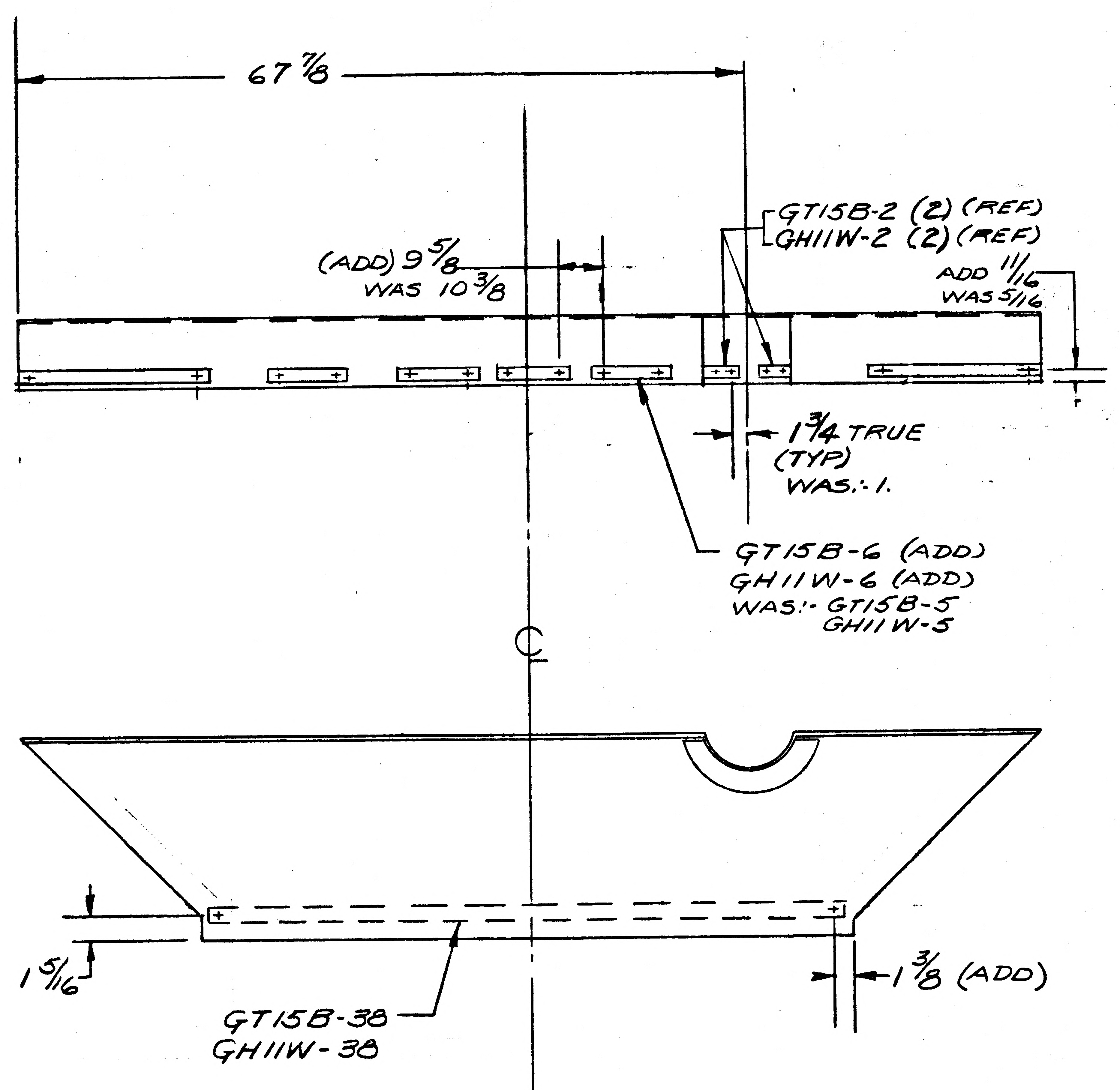

67 7/8
GT15B-2 (2) (REF)
GH11W-2 (2) (REF)
(ADD) 9 5/8
WAS 10 3/8
ADD 11/16
WAS 5/16
1 3/4 TRUE
(TYP)
WAS:- 1.
GT15B-6 (ADD)
GH11W-6 (ADD)
WAS:- GT15B-5
GH11W-5
℄
1 5/16
1 3/8 (ADD)
GT15B-38
GH11W-38

LDW280-51744-7 ASSY (ADD)
(-7 REPLACES -3)

THERM SHLD

2

DETAIL SPEC REQ		CL II ENGRG CHG	✓	CL I ENGRG CHG	

REASON FOR EO	DESCRIPTION OF EO
RELOCATE & ADD GT15B TABS TO AGREE WITH MATING PLUME SHIELD (REF RTE NO. 02131-233	ADDED -7 ASSY:- IDENTICAL TO -3 ASSY EXCEPT AS SHOWN

GAEC EO RELEASE: C FR 1/10/67

MODEL	EFFECTIVITY: PROCURING ACTIVITY NO.	GAEC UNIT NO.	SUB CONTR UNIT NO.
LM		LM-1 (31)	

DRAWING CHANGE REQD: REVISE DWG	RECORD EO	DISPOSITION OF PARTS: REWORK	SCRAP
✓			-3

APPROVED BY									
DATE	1/9/67	1/9/67		1/9/67	1/9/67		1/10/67	1.10.67
3	YDI	~~SUPPORT~~ Therm	RELIAB. GROUP	GROUP LEADER	STRESS GROUP	LIAISON ENGRG	PROJ ENGRG	~~GOVT~~

PRIORITY	DRAWING TITLE	DRAWING NO.	EO NO.
C	SKIN ASSY ~ D/S ~ QUAD II ~ SEQ PLUME IMPINGEMENT ~ UPPER THER. SHD	LDW280-51744	A2

ISSUED BY F. MADDEN / J. STRAKOSCH SECTION VEH DES INT GROUP NO. 335 PL 35

A

ENG 32.1 REV 3-46

GRUMMAN AIRCRAFT ENGINEERING CORP.
CODE IDENT NO. 26512
ENGINEERING ORDER

DWG. NO. LDW280-51744 | EO NO. A3
CONTROL INFO NO. LDW280A-5798

IN F/D & LM REMOVE -7 ASSY. ADD -9 SHIN ASSY IDENTICAL
TO -7 EXCEPT REMOVE ALL GT15B & GH11W
EFF FOR -9 LM-1(31) 1 REQD
NEXT ASSY FOR -9 LDW280-51742

(5)

DETAIL SPEC REQ		CL II ENGRG CHG	✓	CL I ENGRG CHG		LCR -928	

REASON FOR EO: LCR 928 IMPROVE PAINT ADHESION

DESCRIPTION OF EO: REMOVED -7 ADDED -9

C/ GAEC EO RELEASE C
3/14/67

MODEL	EFFECTIVITY: PROCURING ACTIVITY NO.	GAEC UNIT NO.	SUB CONTR UNIT NO.
LM		LM-1(31)	

DRAWING CHANGE REQD: REVISE DWG	RECORD EO	DISPOSITION OF PARTS: REWORK	SCRAP
✓			✓

	S	VDI	SUPPORT	RELIAB. GROUP	GROUP LEADER	STRESS GROUP	LIAISON ENGRG	PROJ ENGRG	~~GOVT~~
APPROVED BY									
DATE	3/7/67				3/4/67	3/8/67		3-14-67	3/14/67

PRIORITY: C

DRAWING TITLE: SHIN ASSY DES STAGE QUAD II SEQ UPPER

DRAWING NO.: LDW280-51744

EO NO.: A3

ISSUED BY G. ZEMAN / J. STRAKOSCH SECTION VDI GROUP NO. 335 PL 35

01

NAS 9-1100

LDW280-51789A

MODEL OR END ITEM	NEXT ASSY	MODULE OR SER NO.	REQD PER MODULE OR END ITEM
PART NO.		GAEC SCH NO.	

MODEL OR END ITEM	NEXT ASSY	MODULE OR SER NO.	REQD PER MODULE OR END ITEM
PART NO.		GAEC SCH NO.	

MODEL OR END ITEM	NEXT ASSY	MODULE OR SER NO.	REQD PER MODULE OR END ITEM
LM	LDW280-51509	LM 1(31)	1
PART NO. LDW 280-51789 -3		GAEC SCH NO. 50-3	

WORK PKG FUNCTION NO. 110 2

SH REV STATUS: FOR DESCRIPTION OF REV SEE SUBQ SH

SHEET	1.00	1.10	2.00	2.01	3.00		4.00		
REV	A	A	A	A	A		A		
SHEET									
REV									
SHEET									
REV									

LAST SECT LTR USED	BB	GRUMMAN REL INFO A		
		PRIM NO.	JS 6001	
LAST DASH NO. USED	-3	207	MP 14 A 3/27/67	

UNLESS OTHERWISE SPECIFIED DIMENSIONS ARE IN INCHES.
TOLERANCE UNLESS SPECIFIED
FRACTIONS - DECIMALS - ANGLES
± 1/16 ±.020 ± 1/2°

ORIG DWG AUTH

DETAIL SPEC REQUIREMENT	
CLASS II ENGRG CHANGE	
CLASS I ENGRG CHANGE	

CONTRACT NO. NAS 9-1100 | LINE ITEM | DOCUMENTATION TYPE # II

DRAWN BY	M.H.MULLER 2/17/67	RELIABILITY	
LAYOUT BY	E.MOUQUIN		
CHECKED BY	EG 3-7-67		
~~GR LEADER~~			
VEH DES INT	3/18/67		
STRUCTURE	3/22/67	PROJ ENGR	3-24-67
STRUCTURE	3/24	REL GROUP	3/22/67
WEIGHTS			

GRUMMAN AIRCRAFT ENGRG CORP
BETHPAGE, L. I., NEW YORK

SUPPORT INSTALLATION
DESCENT STAGE-UPPER DECK
ELECTRICAL LINES

SIZE	CODE IDENT NO.		
B	26512	LDW280-51789	A
SCALE	NONE	SHEET 1.00 OF 6	

ENG 77.1 12-65

01

NAS 9-1100

REVISIONS FOR CONTINUATION OF REVISIONS SEE SHEET ____

CHANGE LTR	ITEM NO.	SHEET NO.	ZONE	GRUMMAN INFO ONLY	DET SPEC	CLASS I	CLASS II	ENGRG ORDER	DESCRIPTION	EFFECTIVITY	DISPOSITION OF EXISTING PARTS		CHANGED BY AND DATE	ENGRG APPD	GOVT APPD
											REWORK	SCRAP			
A	1	1.00, 1.10 2.00, 2.01 3.00 & 4.00					✓	EOA1	E.O.-A1 INITIAL DRAWING RELEASE PARTS MADE PER E.O.	LEM-1	NOT	REQD			
A	2	, 1.10 2.00, 2.01 3.00 & 4.00					✓	EOA2	IN DETAIL 'S' LDW280-18052-17 REPLACES LDW280-17999-17, ADD LDW280-18052-19 IN DETAIL 'T' LDW280-17999-23 REPLACES LDW280-17999-13 IN DETAIL 'AR' DIM 3 3/4 WAS 4. IN SECT F-F, K-K, L-L, N-N & DETAIL 'W' LDW280-17998-21 REPLACES LDW280-17998-11 IN DETAIL A, C, AR, SECT D-D, AA-AA, AE-AE & VIEW AK & B/M LDW280-17998-23 REPLACES LDW280-17998-13. IN SECT R-R, LDW280-17998-25 REPLACES LDW280-17998-15 IN DETAIL V, W & Z LDW280-18035-25-27 & 29 REPLACES LDW280-18035-11, -13 & 19 IN DETAIL Z COORDINATE +Z 27.00 (REF) WAS +Z 81.00 (REF) IN ALL F/D CALLOUTS NAS697C08 REPLACES NAS697A08 ; ADDED NOTE 2 IN DETAIL 'S' LDW280-17999-25 REPLACES LDW280-17999-15, ADD MS20470DD4(2) & SHIM(2)	LEM-1	✓		M.H. MULLER 2/17/67		
A	3	1.00, 1.10, 2.00, 2.01 3.00 & 4.00					✓	EOA3	IN F/D, B/M & M/B ADDED -3 & REMOVED -1.	LEM-1	✓				
A	4	1.10 2.00, 2.01 & 4.00					✓	EOA4	ON -3 INSTL ADDED VIEW AS-AS, DRILL 9/16 (.561-.570) (2 HOLES) ADDED LDW280-17998-11(2), MS20470AD3(4) NAS697A08 (2) & NAS1097AD3 (4) DRILL # 19 HOLE (2)	LEM-1	✓				
A	5	4.00					✓	Ⓟ	IN ZONE 19C FOR DETAIL AM 2 5/8 WAS 1 5/8.	LEM-1			EG		

CHG APPROVED	LTR	~~GROUP LDR~~	VEH DES INT	STRUCTURES	STRUCTURES	WEIGHTS	RELIABILITY
	A						

GRUMMAN AIRCRAFT ENGRG CORP., BETHPAGE, L. I., NEW YORK

SIZE	CODE IDENT NO.		
B	26512	LDW280-51789	A
SCALE NONE			SHEET 1.10

ENG 77.16 3-66

01

NAS 9-1100

-3	PART NO.	I&T	CODE IDENT	NOMENCLATURE OR DESCRIPTION	MATERIAL	GOVT SPEC	COML SPEC	STOCK SIZE	PROCESS SYM	FINISH NO.	ZONE
8	GB11D-8-76	E		BRACKET ASSY	GRUMMAN STD						
1	LDW280-18052-19			PLATE	SEE DWG						13D
1	LDW280-18052-17			BRACKET							13D
1	LDW280-18035-29			ZEE							23C
1	-27										18A
1	-25										20B
1	-23										20B
1	LDW280-18035-21			ZEE							20B
1	LDW280-17999-25			ANGLE							13C
1	-23										12C
4	-21										26A
6	LDW280-17999-11			ANGLE							7A
3	LDW280-17998-25			CLIP							15B
54	-23										12D
11	-21										11B
8	-19										27D
5	LDW280-17998-11			CLIP	SEE DWG						18D
											18D
									NONE	NONE	
	LDW280-51789-3	E		SUPPORT INSTL							

QTY PER ASSEMBLY

SYM OR NO.	PROCESS SYM OR FINISH NO.	GRUMMAN SPEC OR MILITARY SPEC	SYM OR NO.	PROCESS SYM OR FINISH NO.	GRUMMAN SPEC OR MILITARY SPEC	SYM OR NO.	PROCESS SYM OR FINISH NO.	GRUMMAN SPEC OR MILITARY SPEC
						76	ALODINE	LSP14-9010

I&T: IDENTIFICATION AND TRACEABILITY IN ACCORDANCE WITH NONE

GRUMMAN AIRCRAFT ENGRG CORP., BETHPAGE, L. I., NEW YORK

SIZE	CODE IDENT NO.		
B	26512	LDW280-51789	A

SCALE NONE

SHEET 2.00

ENG 77.2 5-64

01

NAS 9-1100

QTY PER ASSEMBLY -3	PART NO.	I&T	CODE IDENT	NOMENCLATURE OR DESCRIPTION	MATERIAL	GOVT SPEC	COML SPEC	STOCK SIZE	PROCESS SYM	FINISH NO.	ZONE
AS REQD	SEE NOTE 2			SHIM							
	MS21266-IN			GROMMET	STD PART						
	MS20470DD4			RIVET							
	MS20470AD4										
	MS20470AD3										
	MS20426AD3			RIVET							
	NAS1097AD3			RIVET							
145	NAS697C08			NUT PLATE	STD PART						

SYM OR NO.	PROCESS SYM OR FINISH NO.	GRUMMAN SPEC OR MILITARY SPEC	SYM OR NO.	PROCESS SYM OR FINISH NO.	GRUMMAN SPEC OR MILITARY SPEC	SYM OR NO.	PROCESS SYM OR FINISH NO.	GRUMMAN SPEC OR MILITARY SPEC

I & T: IDENTIFICATION AND TRACEABILITY IN ACCORDANCE WITH NONE

GRUMMAN AIRCRAFT ENGRG CORP., BETHPAGE, L. I., NEW YORK

SIZE	CODE IDENT NO.		
B	26512	LDW280-51789	A

SCALE NONE

SHEET 2.01

ENG 77.2 5-64

01

NAS 9-1100

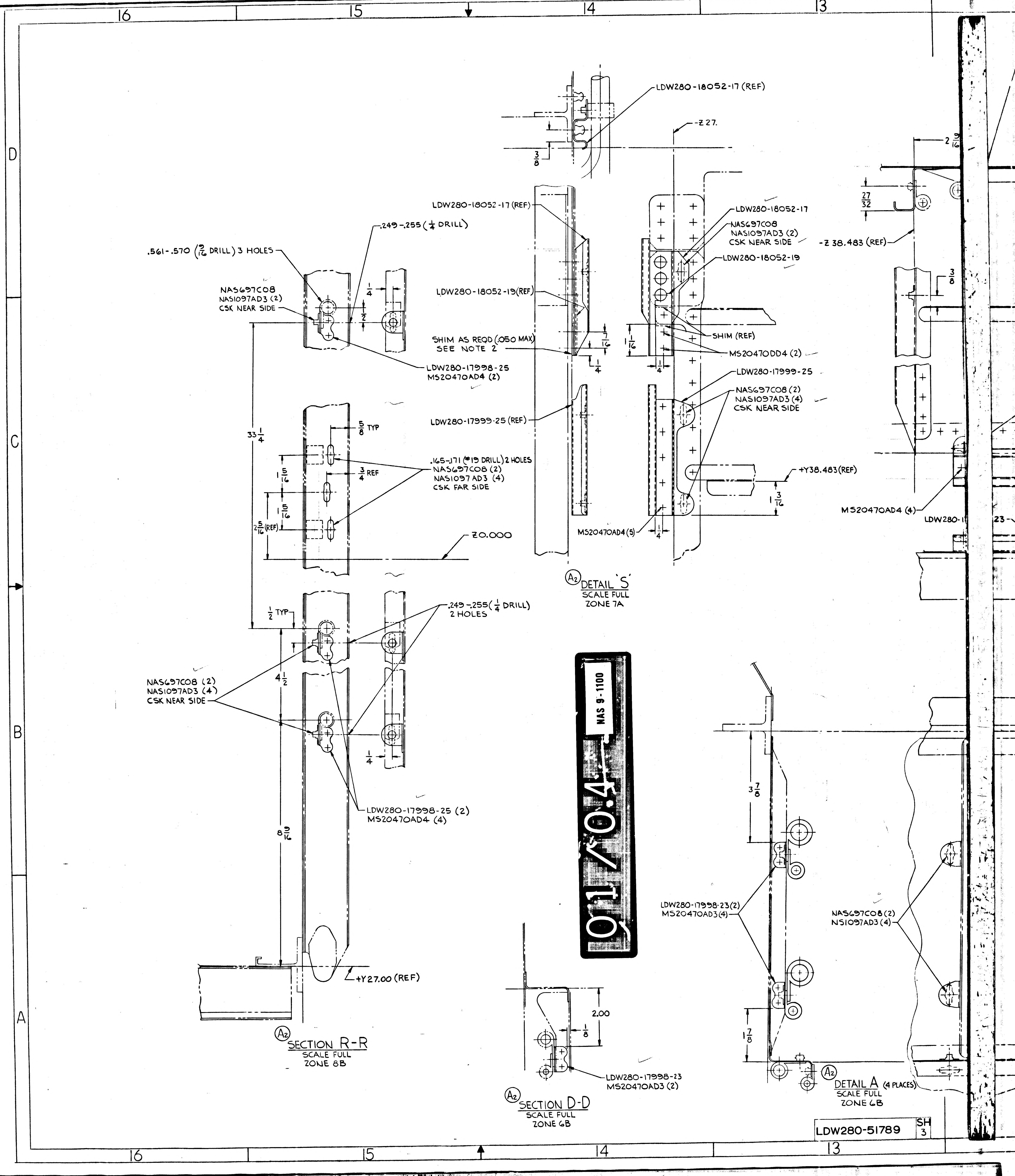
16
15
14
13
D
C
B
A
LDW280-18052-17 (REF)
-Z 27.
3/8
LDW280-18052-17 (REF)
.249-.255 (1/4 DRILL)
.561-.570 (9/16 DRILL) 3 HOLES
NAS697C08
NAS1097AD3 (2)
CSK NEAR SIDE
1/4
1/2
LDW280-18052-19 (REF)
SHIM AS REQD (.050 MAX)
SEE NOTE 2
7/16
1/4
LDW280-17998-25
MS20470AD4 (2)
LDW280-18052-17
NAS697C08
NAS1097AD3 (2)
CSK NEAR SIDE
-Z 38.483 (REF)
LDW280-18052-19
SHIM (REF)
1 1/16
MS20470DD4 (2)
1/4
LDW280-17999-25
NAS697C08 (2)
NAS1097AD3 (4)
CSK NEAR SIDE
27/32
2 9/16
3/8
33 1/4
5/8 TYP
.165-.171 (#19 DRILL) 2 HOLES
NAS697C08 (2)
NAS1097AD3 (4)
CSK FAR SIDE
3/4 REF
1 5/16
1 5/16
2 5/16 (REF)
Z0.000
LDW280-17999-25 (REF)
+Y38.483 (REF)
1 3/16
MS20470AD4 (5)
1/4
MS20470AD4 (4)
LDW280-
23-
DETAIL 'S'
SCALE FULL
ZONE 7A
A2
1/2 TYP
.249-.255 (1/4 DRILL)
2 HOLES
NAS697C08 (2)
NAS1097AD3 (4)
CSK NEAR SIDE
4 1/2
1/4
LDW280-17998-25 (2)
MS20470AD4 (4)
8 9/16
+Y27.00 (REF)
A2
SECTION R-R
SCALE FULL
ZONE 8B
01 / 0.4
NAS 9-1100
3 7/8
LDW280-17998-23 (2)
MS20470AD3 (4)
NAS697C08 (2)
NS1097AD3 (4)
1 7/8
2.00
1/8
LDW280-17998-23
MS20470AD3 (2)
A2
SECTION D-D
SCALE FULL
ZONE 6B
A2
DETAIL A (4 PLACES)
SCALE FULL
ZONE 6B
LDW280-51789
SH 3

02/04 NAS 9-1100

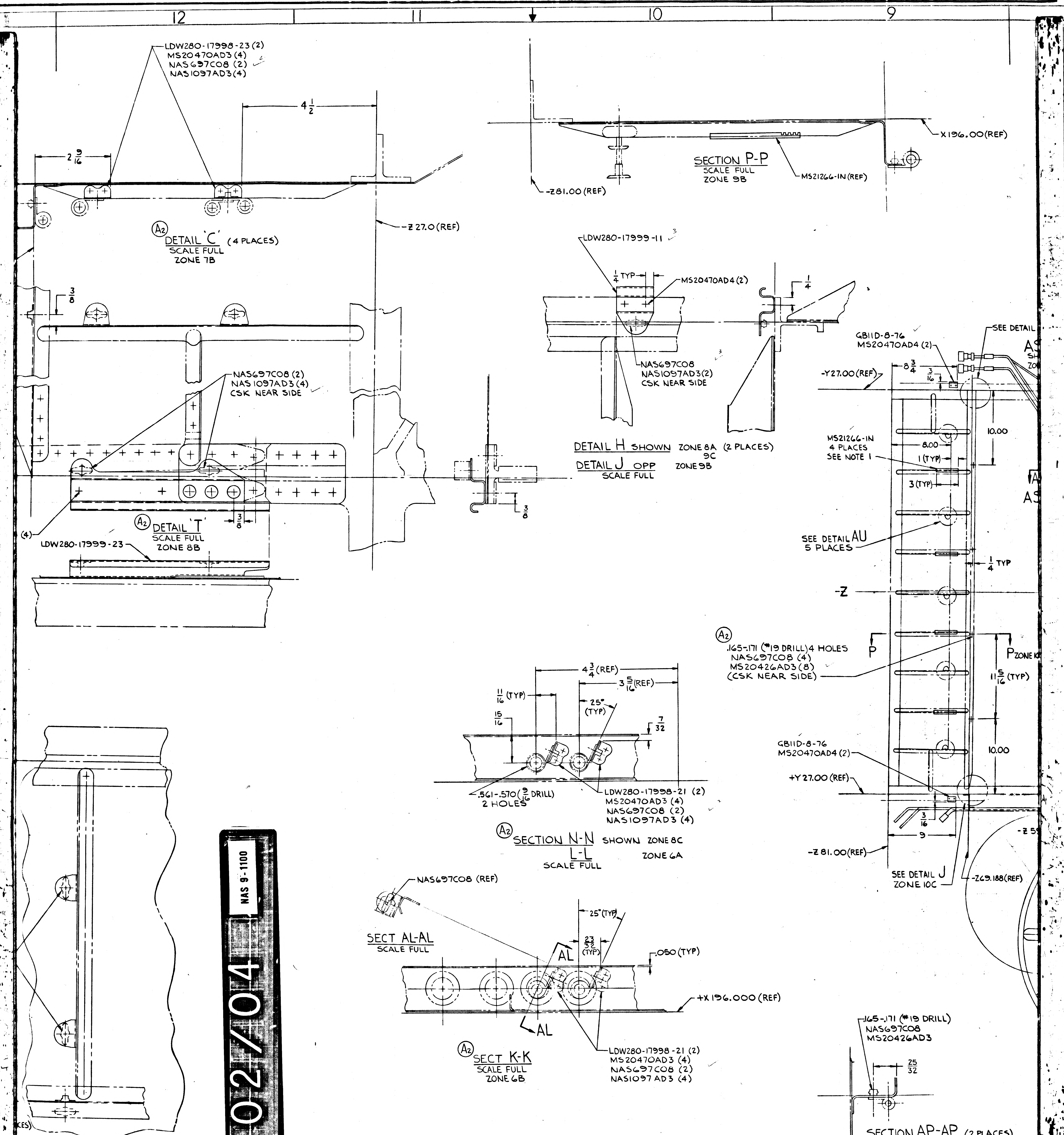
12
11
10
9
LDW280-17998-23 (2)
MS20470AD3 (4)
NAS697C08 (2)
NAS1097AD3 (4)
4 1/2
2 9/16
DETAIL 'C' (4 PLACES)
SCALE FULL
ZONE 7B
-Z 27.0 (REF)
3/8
NAS697C08 (2)
NAS1097AD3 (4)
CSK NEAR SIDE
(4)
DETAIL 'T'
SCALE FULL
ZONE 8B
LDW280-17999-23
3/8
X196.00 (REF)
SECTION P-P
SCALE FULL
ZONE 9B
MS21266-1N (REF)
-Z81.00 (REF)
LDW280-17999-11
1/4 TYP
MS20470AD4 (2)
NAS697C08
NAS1097AD3 (2)
CSK NEAR SIDE
1/4
3/8
DETAIL H SHOWN ZONE 8A 9C (2 PLACES)
DETAIL J OPP ZONE 9B
SCALE FULL
GB11D-8-76
MS20470AD4 (2)
SEE DETAIL
-Y27.00 (REF)
8 3/4
3/16
10.00
MS21266-1N
4 PLACES
SEE NOTE 1
8.00
1 (TYP)
3 (TYP)
SEE DETAIL AU
5 PLACES
1/4 TYP
-Z
.165-.171 (#19 DRILL) 4 HOLES
NAS697C08 (4)
MS20426AD3 (8)
(CSK NEAR SIDE)
P
P ZONE
11 5/16 (TYP)
10.00
GB11D-8-76
MS20470AD4 (2)
+Y 27.00 (REF)
3/16
9
-Z 81.00 (REF)
SEE DETAIL J
ZONE 10C
-Z69.188 (REF)
4 3/4 (REF)
3 5/16 (REF)
11/16 (TYP)
25° (TYP)
15/16
7/32
.561-.570 (9/16 DRILL)
2 HOLES
LDW280-17998-21 (2)
MS20470AD3 (4)
NAS697C08 (2)
NAS1097AD3 (4)
SECTION N-N SHOWN ZONE 8C
L-L ZONE 6A
SCALE FULL
NAS697C08 (REF)
SECT AL-AL
SCALE FULL
25° (TYP)
23/32 (TYP)
AL
.050 (TYP)
+X 196.000 (REF)
AL
SECT K-K
SCALE FULL
ZONE 6B
LDW280-17998-21 (2)
MS20470AD3 (4)
NAS697C08 (2)
NAS1097AD3 (4)
.165-.171 (#19 DRILL)
NAS697C08
MS20426AD3
25/32
SECTION AP-AP (2 PLACES)
SCALE FULL
ZONE 6A
LDW280-51789
SH 3

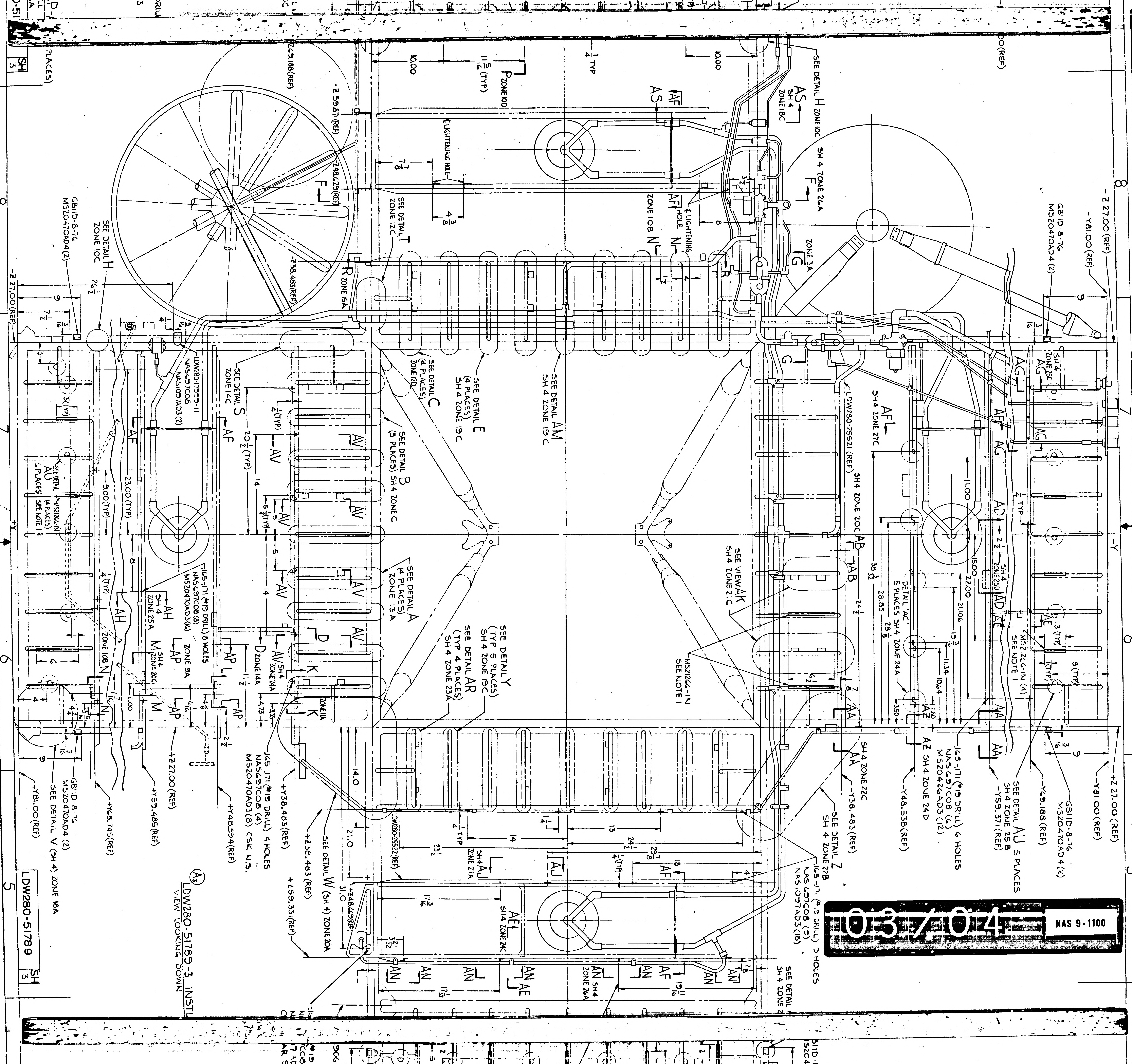
LDW280-51789-3 INSTL
VIEW LOOKING DOWN
LDW280-51789
SH 3
SEE DETAIL H ZONE 10C
SEE DETAIL T ZONE 12C
SEE DETAIL C (4 PLACES) ZONE 12D
SEE DETAIL E (4 PLACES) SH 4 ZONE 19C
SEE DETAIL AM SH 4 ZONE 19C
SEE DETAIL S ZONE 14C
SEE DETAIL B (5 PLACES) SH 4 ZONE C
SEE DETAIL A (4 PLACES) ZONE 13A
SEE DETAIL Y (TYP 5 PLACES) SH 4 ZONE 19C
SEE DETAIL AR (TYP 4 PLACES) SH 4 ZONE 23A
SEE VIEW AK SH 4 ZONE 21C
SEE DETAIL Z SH 4 ZONE 22B
SEE DETAIL AU 5 PLACES SH 4 ZONE 25B
SEE DETAIL V (SH 4) ZONE 16A
SEE DETAIL W (SH 4) ZONE 20A
GB11D-8-76
MS20470AD4 (2)
MS21266-1N SEE NOTE 1
LDW280-25521 (REF)
LDW280-25522 (REF)
1C5-171 (#19 DRILL) 6 HOLES
NAS697C08 (6)
MS20426AD3 (12)
1C5-171 (#19 DRILL) 4 HOLES
NAS697C08 (4)
MS20470AD3 (8) CSK U.S.
1C5-171 (#19 DRILL) 9 HOLES
NAS697C08 (9)
NAS1097AD3 (18)
-Z 27.00 (REF)
+Z 27.00 (REF)
-Y81.00 (REF)
+Y81.00 (REF)
+Y68.745 (REF)
+Y59.485 (REF)
+Y48.594 (REF)
+Y38.483 (REF)
-Y38.483 (REF)
-Y48.538 (REF)
-Y59.371 (REF)
-Y69.188 (REF)
+Z36.483 (REF)
+Z59.33 (REF)
-Z 59.87 (REF)
-Z48.629 (REF)
-Z38.483 (REF)
£ LIGHTENING HOLE

03 / 04

NAS 9-1100

NOTES:
1. APPLY MS21266-IN PER LSP14-22500 USING EC2216 ADHESIVE CEMENT #15
2. SHIM MATL TO BE 2024-T3, QQ-A-250/4 FINISH 76.

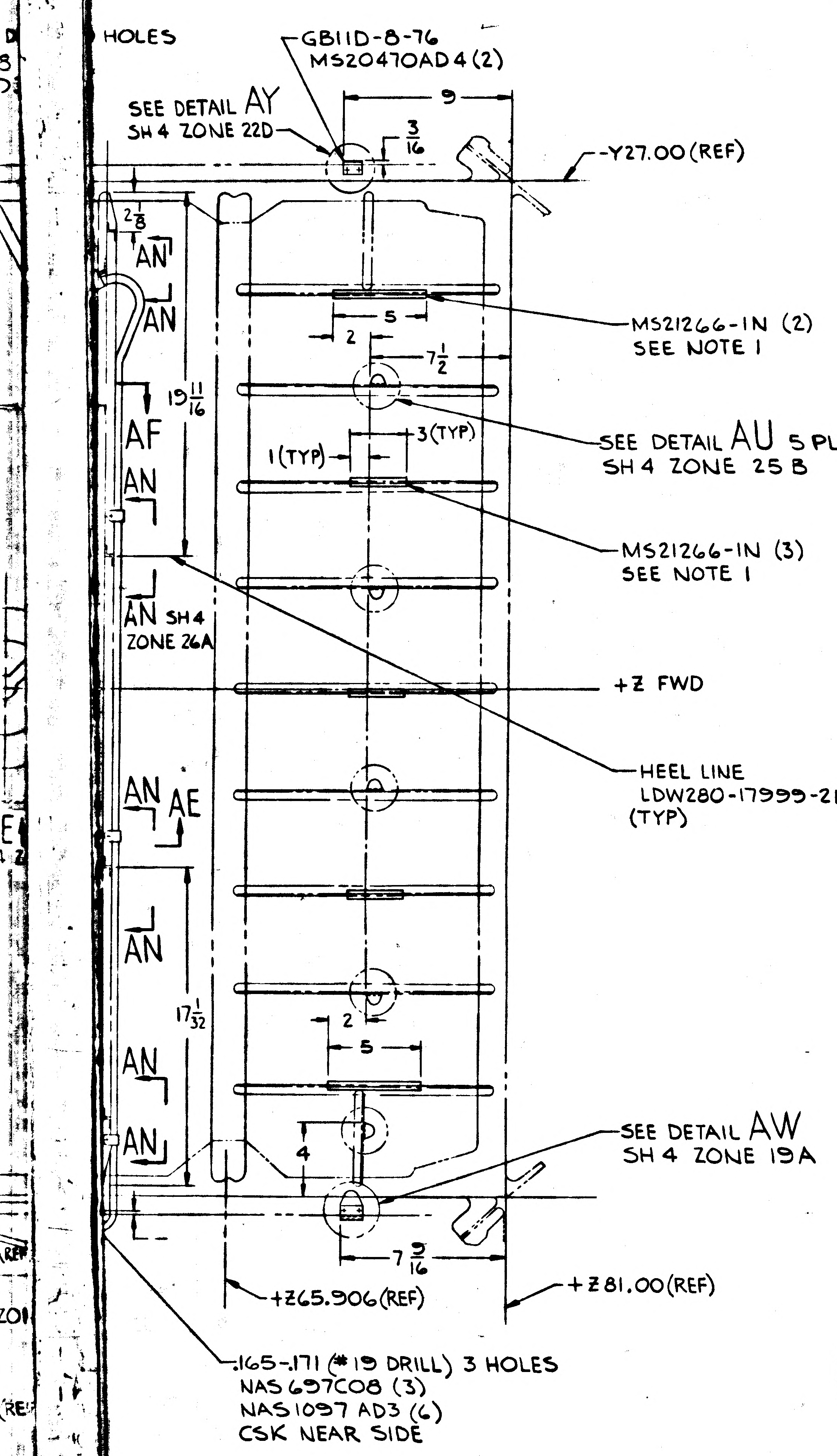
HOLES
GB11D-8-76
MS20470AD4 (2)
SEE DETAIL AY
SH 4 ZONE 22D
9
3/16
-Y27.00 (REF)
2 1/8
AN
AN
19 11/16
AF
AN
AN SH 4
ZONE 26A
AN AE
AN
17 1/32
AN
AN
MS21266-IN (2)
SEE NOTE 1
5
2
7 1/2
SEE DETAIL AU 5 PLACES
SH 4 ZONE 25 B
1 (TYP)
3 (TYP)
MS21266-IN (3)
SEE NOTE 1
+Z FWD
HEEL LINE
LDW280-17999-21 (REF)
(TYP)
2
5
4
SEE DETAIL AW
SH 4 ZONE 19A
7 9/16
+Z65.906 (REF)
+Z81.00 (REF)
.165-.171 (#19 DRILL) 3 HOLES
NAS697C08 (3)
NAS1097AD3 (6)
CSK NEAR SIDE

-3 INSTL
DOWN

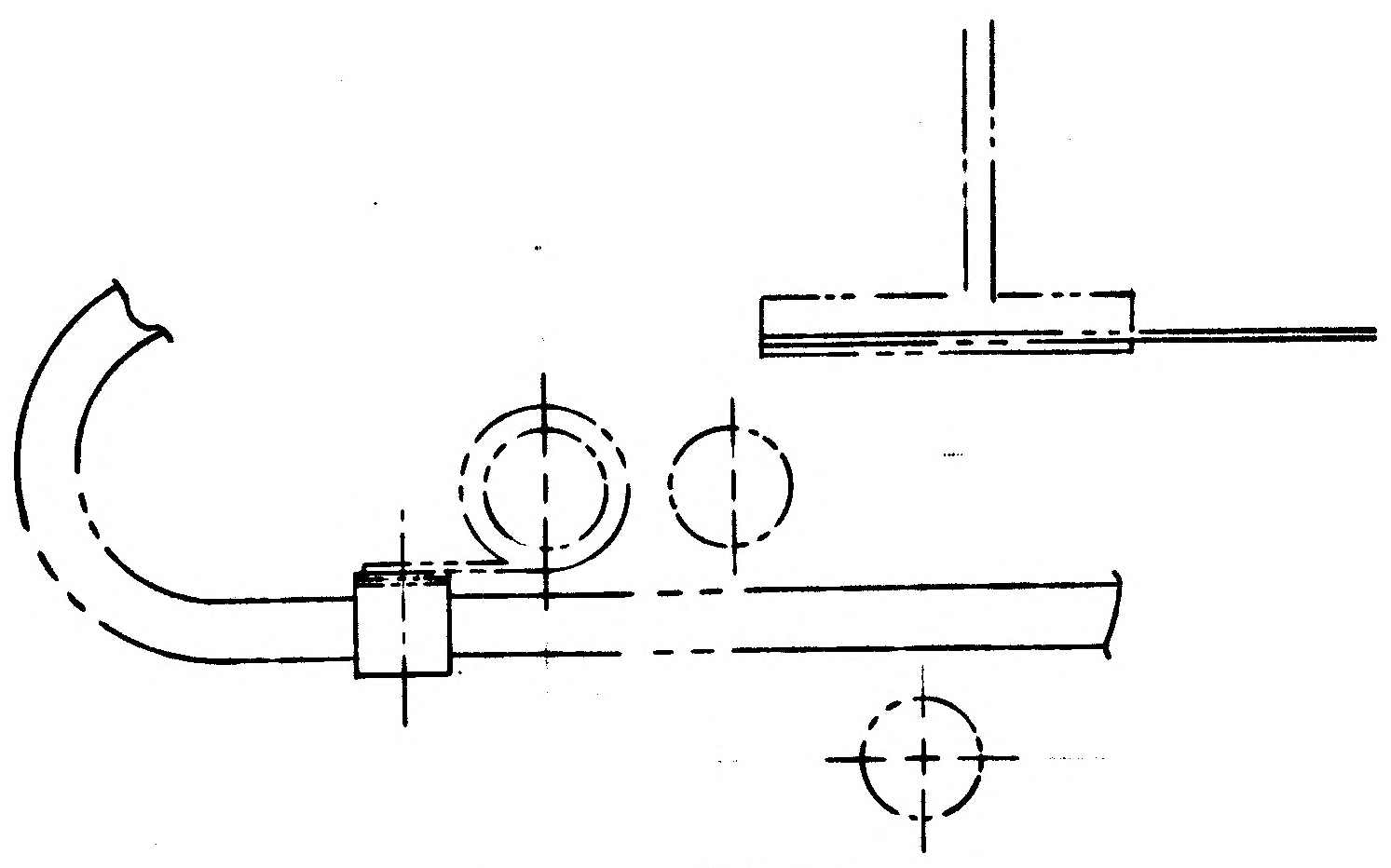

SECTION U-U
SCALE FULL
ZONE 3A

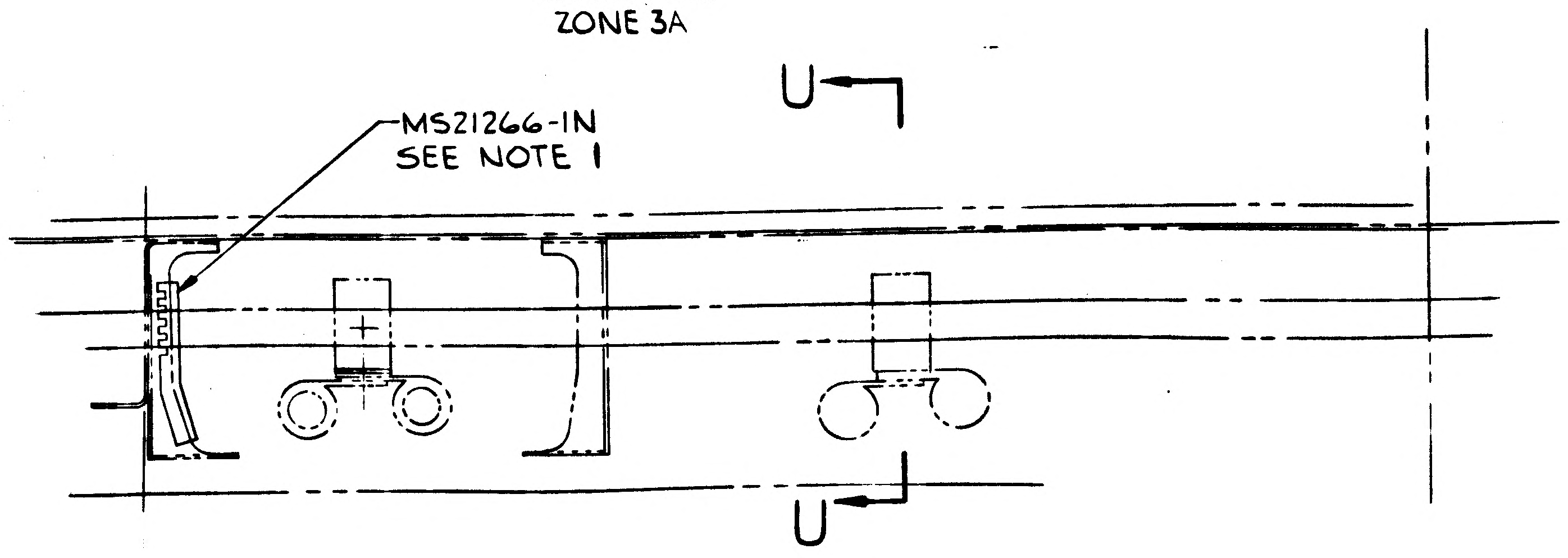
MS21266-IN
SEE NOTE 1
U
U

SECTION G-G
SCALE FULL
ZONE 7C

Q4/04
NAS 9-1100

MANUFACTURING OPERATIONS
UNLESS OTHERWISE SPECIFIED
NOTES CHECKED √ APPLY TO THIS DWG.

PART NUMBER AND ALL OTHER MARKINGS IN REGION MARKED ⊠ USE BOTH SIDES IF NECESSARY.	
FILLET AND INSIDE CORNER RADII TOLERANCES .016R TO .062R ± .010 .063R TO .250R ± .015 OVER .250R ± .030	
DEPTH SHOWN FOR TAPPED HOLES IS FULL THDS. 2-3 IMP THDS. BEYOND PERMISSIBLE.	
EXTERNAL THREAD LENGTH SHOWN INCLUDES 2 IMPERFECT THREADS MAX.	
DO NOT CADMIUM PLATE & PAINT HOLES OR SURFACES MARKED WITH DOUBLE ASTERISK.	
MISMATCH STEP OF ± .005 PERMISSIBLE DUE TO CHANGE OF CUTTERS AT INSIDE INTERSECTING SURFACES.	
DIAMETERS MARKED MUST BE CONCENTRIC WITHIN FULL INDICATOR READING	
HOLES MUST BE KEPT FREE OF CHROME PLATING SOLUTION.	
ALL DIMENSIONS SHOWN TO BE MET AFTER CADMIUM PLATING. THICKNESS OF PLATE .0003 MIN. TO .0005 MAX. MIN. THICKNESS TO BE .0002 ON THREADED AREAS. NO ALLOWANCE FOR PLATING IN HOLES	
125 √ SURFACE ROUGHNESS INCLUDING REAMED HOLES PER MIL-STD-10	
200 √ FOR ALL DRILLED HOLES	
REMOVE ALL BURRS. BREAK ALL EDGES .015-.031	
INSPECTION INFORMATION MINIMUM PERMISSIBLE AVERAGE EDGE DISTANCE MARKED IS	
SYMBOL √ DENOTES SURFACE TO BE MACHINED	
UNLESS OTHERWISE SPECIFIED TOLERANCE ON FLANGES IS ± 1/32	
LENGTHS OF AN, NAS & MS AL ALY RIVETS SHORTER THAN 1 INCH ARE NOT SPECIFIED.	
TOLERANCE ON LOFTED DELINEATIONS IS	

DWG SIZE 40 X 128

PRINTING INFO ONLY
FULL SIZE SHEET AREA (42 X 130) 37.92 SQ. FT.
1/2 SIZE SHEET AREA (1/4 OF FULL) 9.48 SQ. FT.
PRINT TRIM LINE

	GRUMMAN AIRCRAFT ENGRG CORP., BETHPAGE, L. I., NEW YORK			
	SIZE K	CODE IDENT NO. 26512	LDW280-51789	A
LM				
MODEL OR END ITEM	SCALE 1/4 & NOTED		SHEET 3.00	

4 FRAMES

LDW280-51789 A

LDW280-51789 A

SH
3

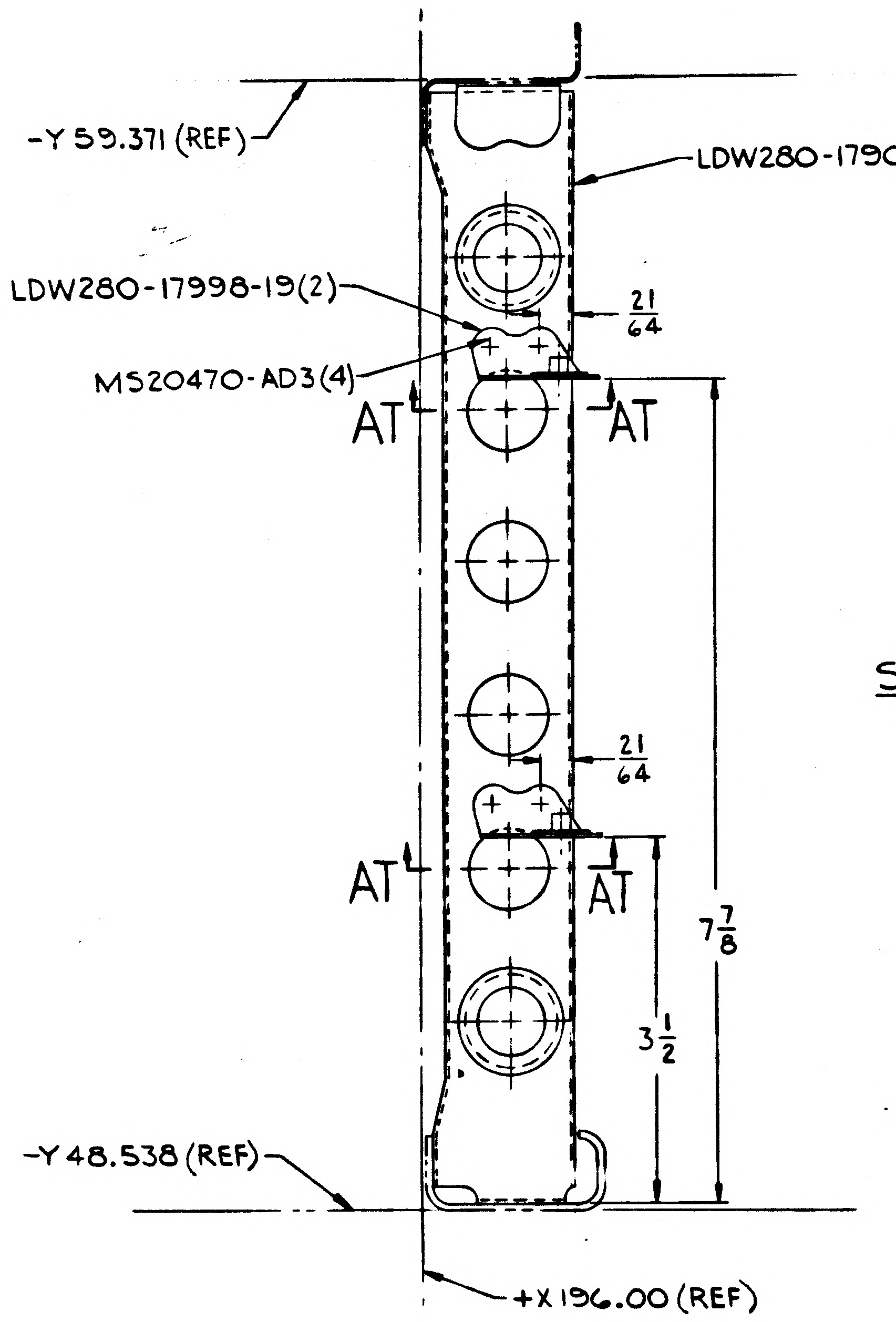
-Y 59.371 (REF)
LDW280-17901-13 (REF)
LDW280-17998-19(2)
MS20470-AD3(4)
21/64
AT
AT
21/64
AT
AT
7 7/8
3 1/2
-Y 48.538 (REF)
+X 196.00 (REF)

SECTION AF-AF (4 PLACES)
SCALE FULL
SH 3 ZONE 7D

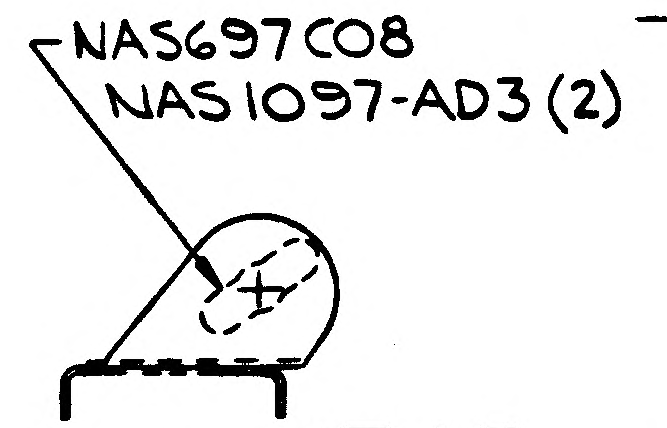
NAS697C08
NAS1097-AD3 (2)

SECTION AT-AT
SCALE FULL

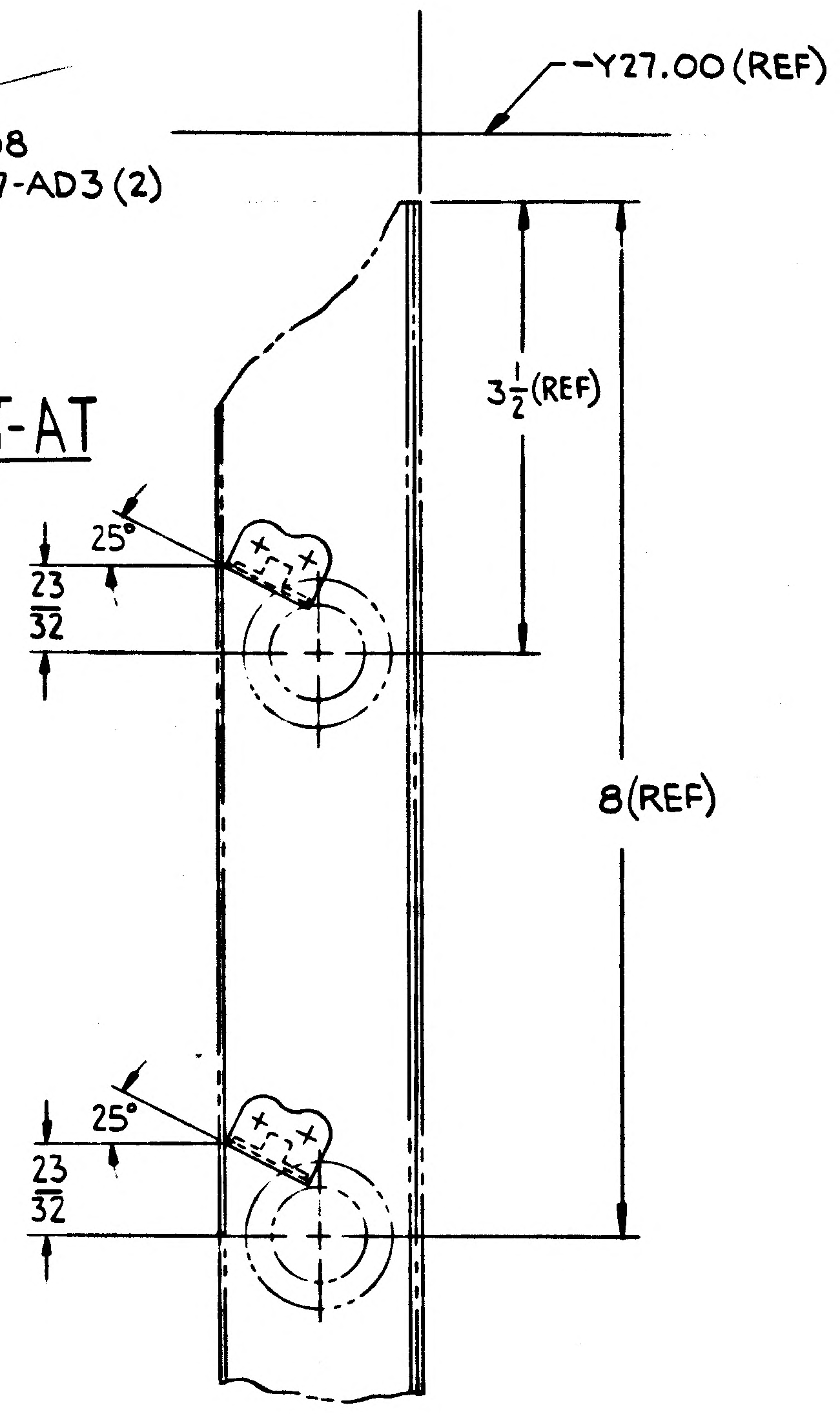
-Y27.00 (REF)
3 1/2 (REF)
25°
23/32
8(REF)
25°
23/32

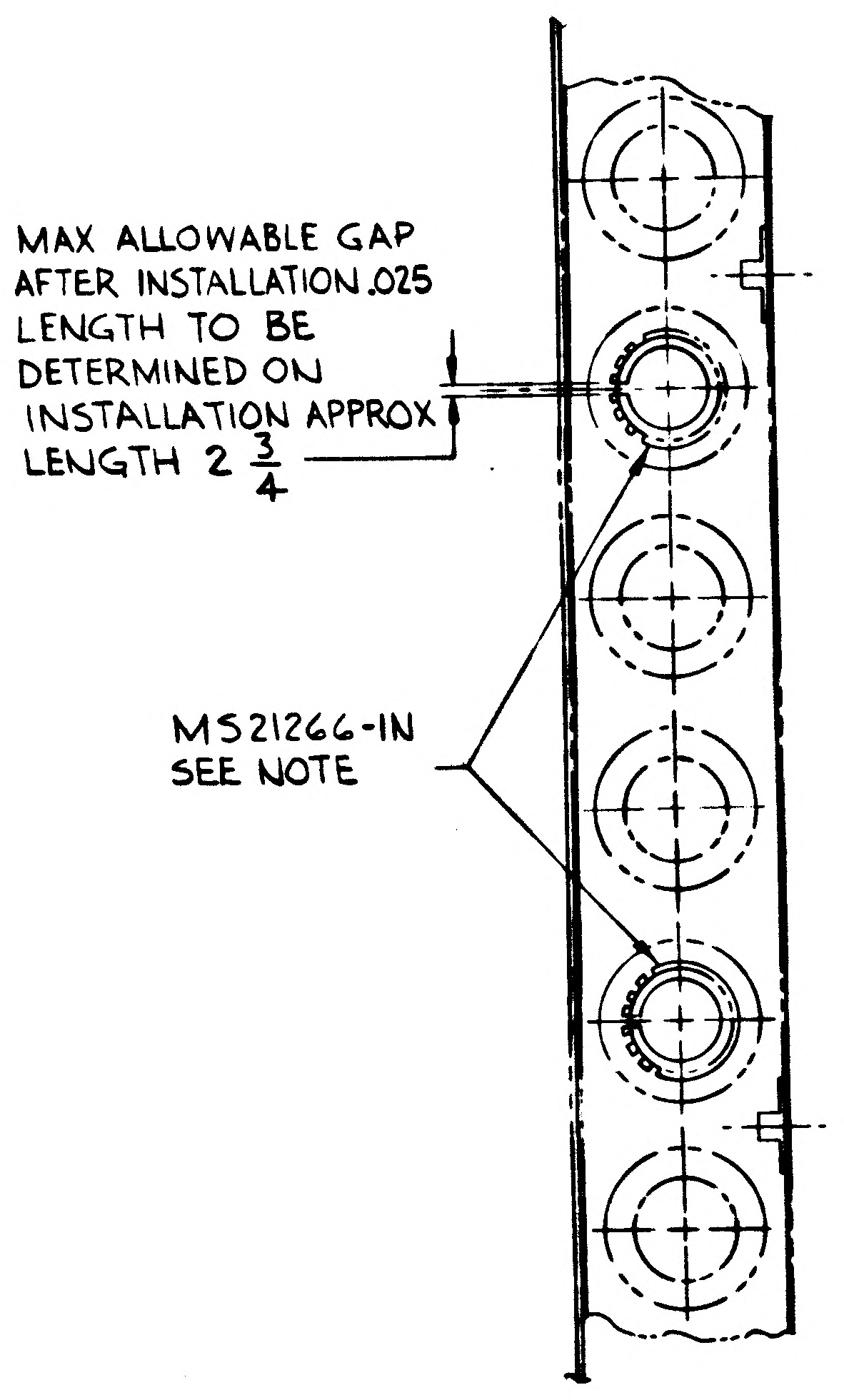
MAX ALLOWABLE GAP AFTER INSTALLATION .025 LENGTH TO BE DETERMINED ON INSTALLATION APPROX LENGTH 2 3/4
MS21266-IN SEE NOTE

SECTION AJ-AJ
SCALE FULL
SH 3 ZONE 5B

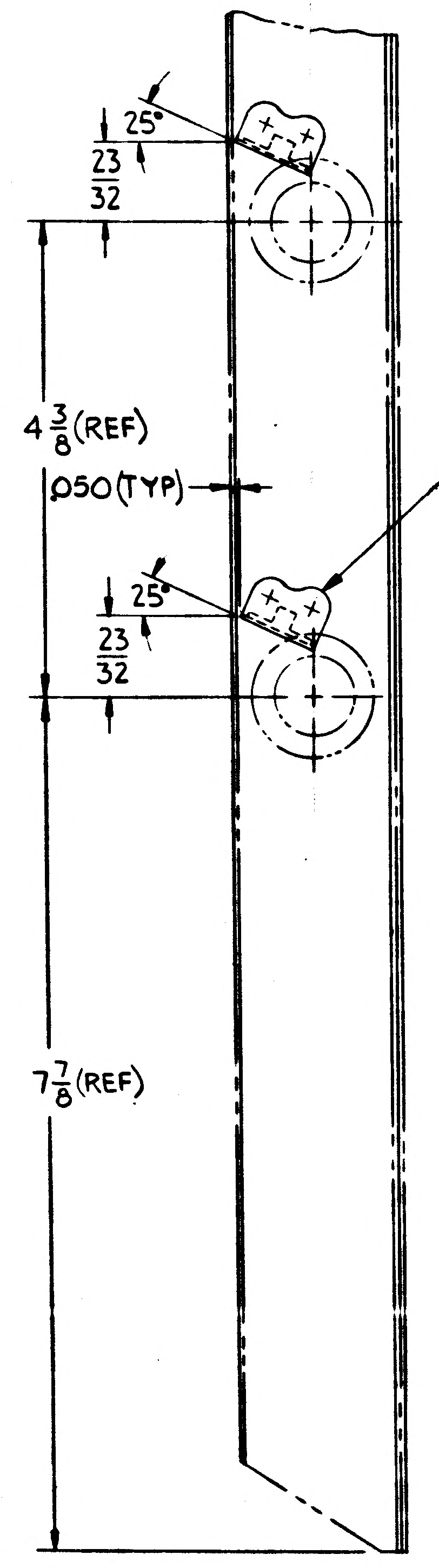
25°
23/32
4 3/8 (REF)
.050 (TYP)
25°
23/32
7 7/8 (REF)
LDW280-17998-21 (4)
MS20470AD3 (8)
NAS697C08 (4)
NAS1097AD3 (8)

Ⓐ2 SECTION F-F
SCALE FULL
SH3 ZONE 8C

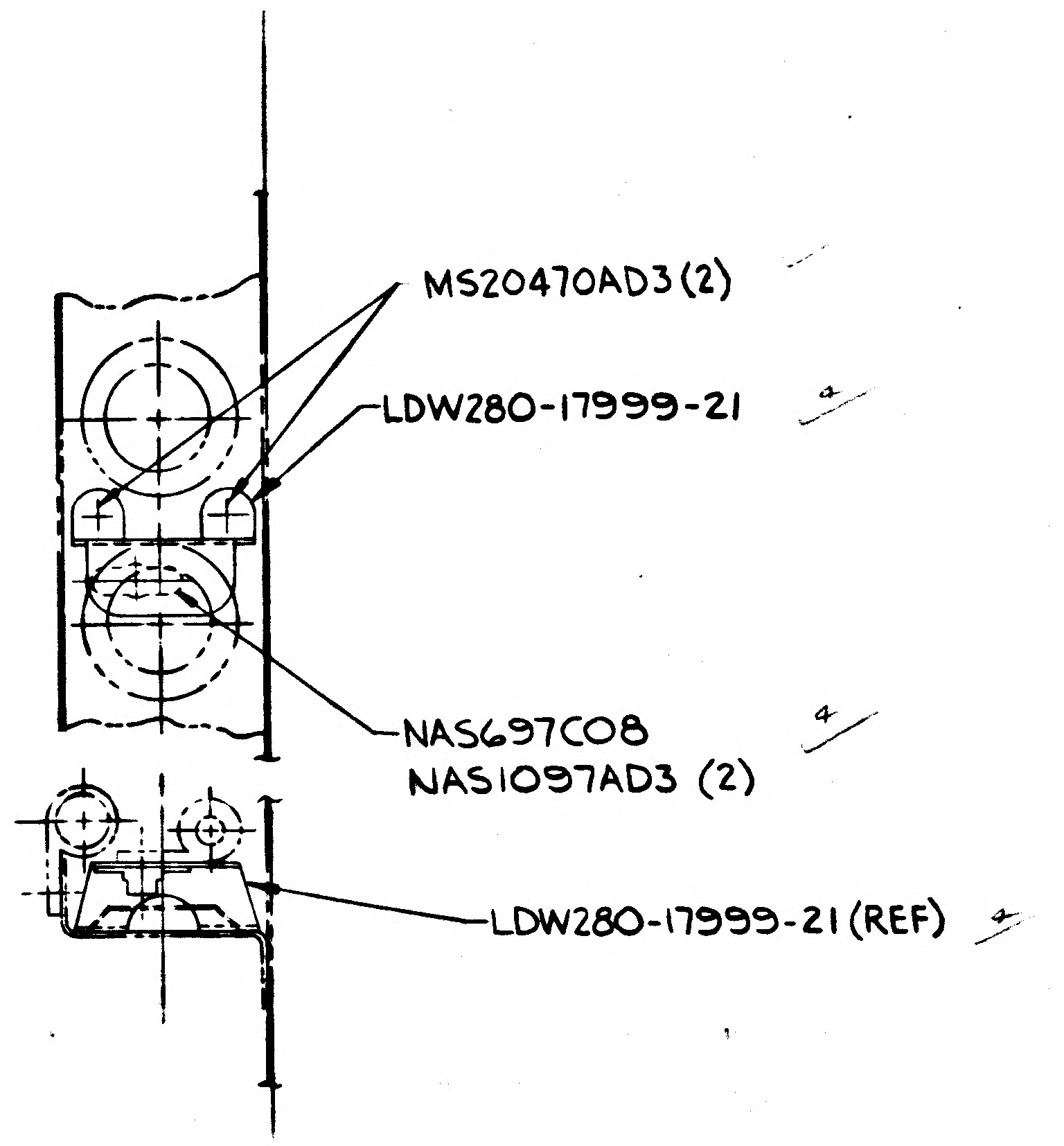
MS20470AD3(2)
LDW280-17999-21
NAS697C08
NAS1097AD3 (2)
LDW280-17999-21 (REF)

SECTION AN-AN (4 PLACES)
SCALE FULL
SH 3 ZONE 5C

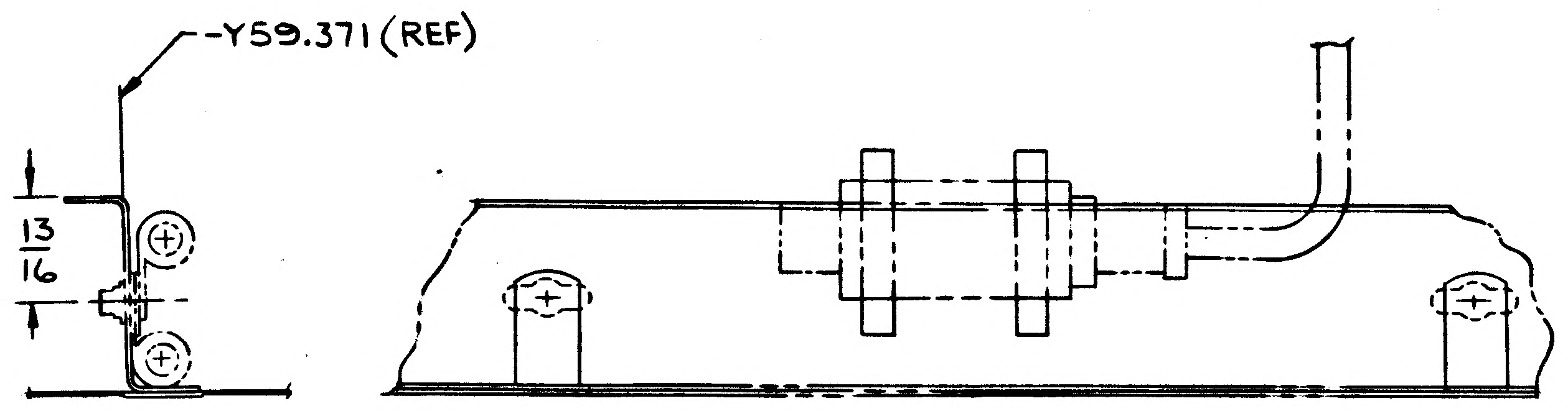
-Y59.371 (REF)
13/16

VIEW AD-AD
SCALE FULL
SH3 ZONE 7D

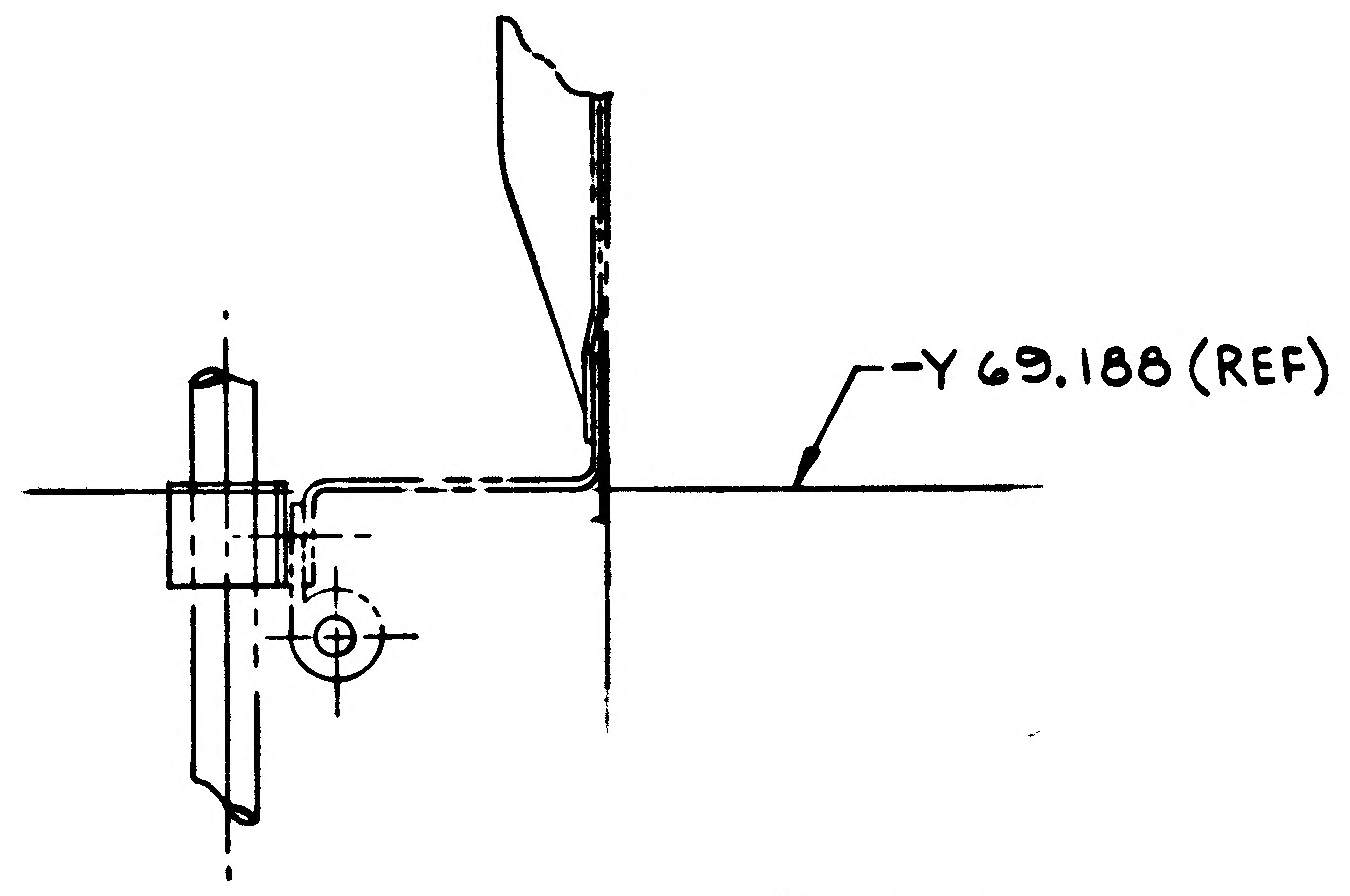

SECTION AG-AG (2 PLACES)
SCALE FULL
SH 3 ZONE 7D

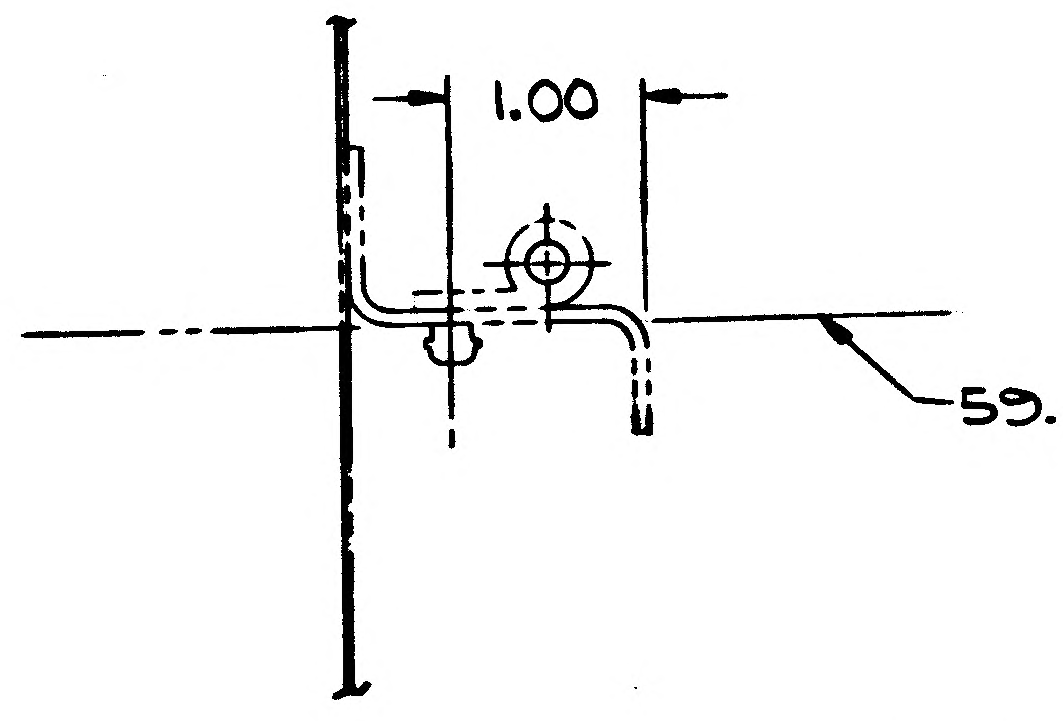
1.00
59.485 (REF)

SECTION AH-AH
SCALE FULL
SH 3 ZONE 6A

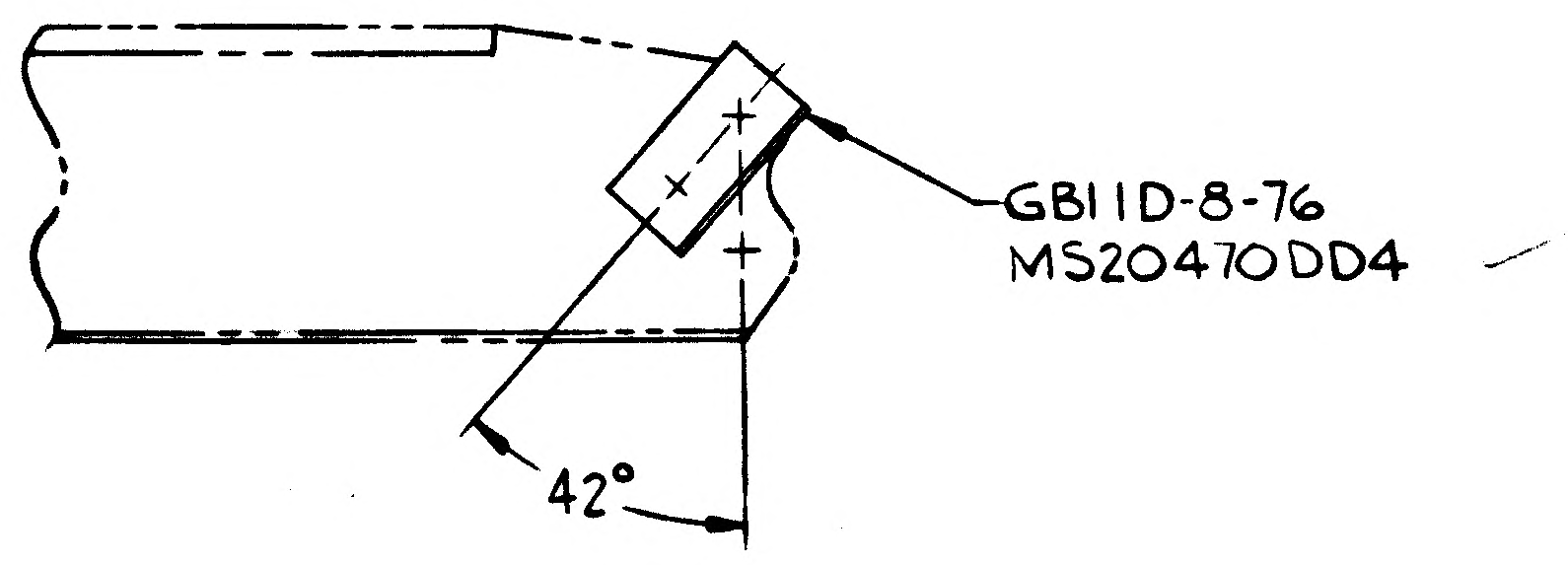
GB11D-8-76
MS20470DD4
42°

SECTION AZ-AZ
SCALE FULL
SH 3 ZONE 6D

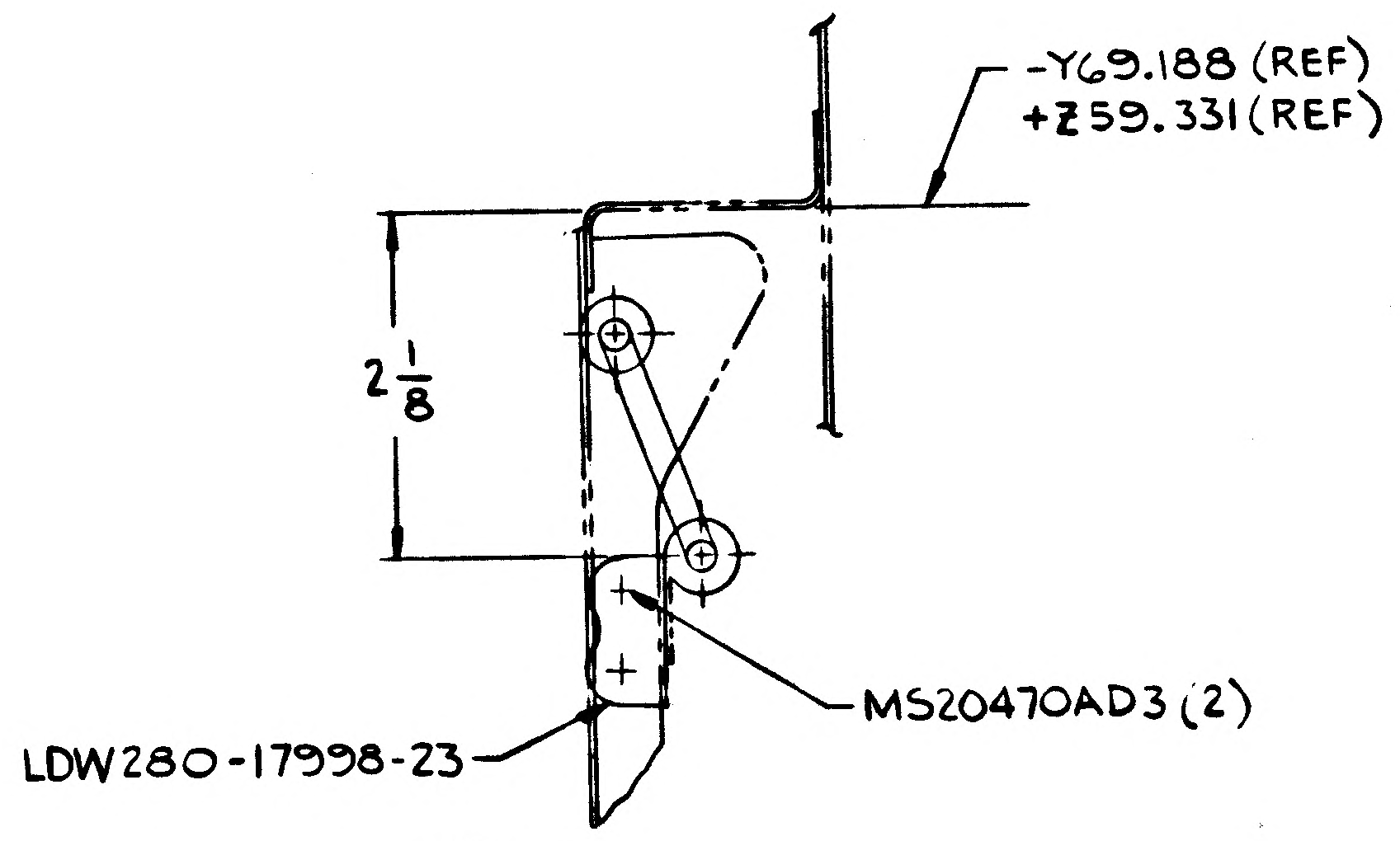
-Y69.188 (REF)
+Z59.331 (REF)
2 1/8
MS20470AD3 (2)
LDW280-17998-23

Ⓐ2 SECTION AE-AE (2 PLACES)
SCALE FULL
SH 3 ZONE 6D

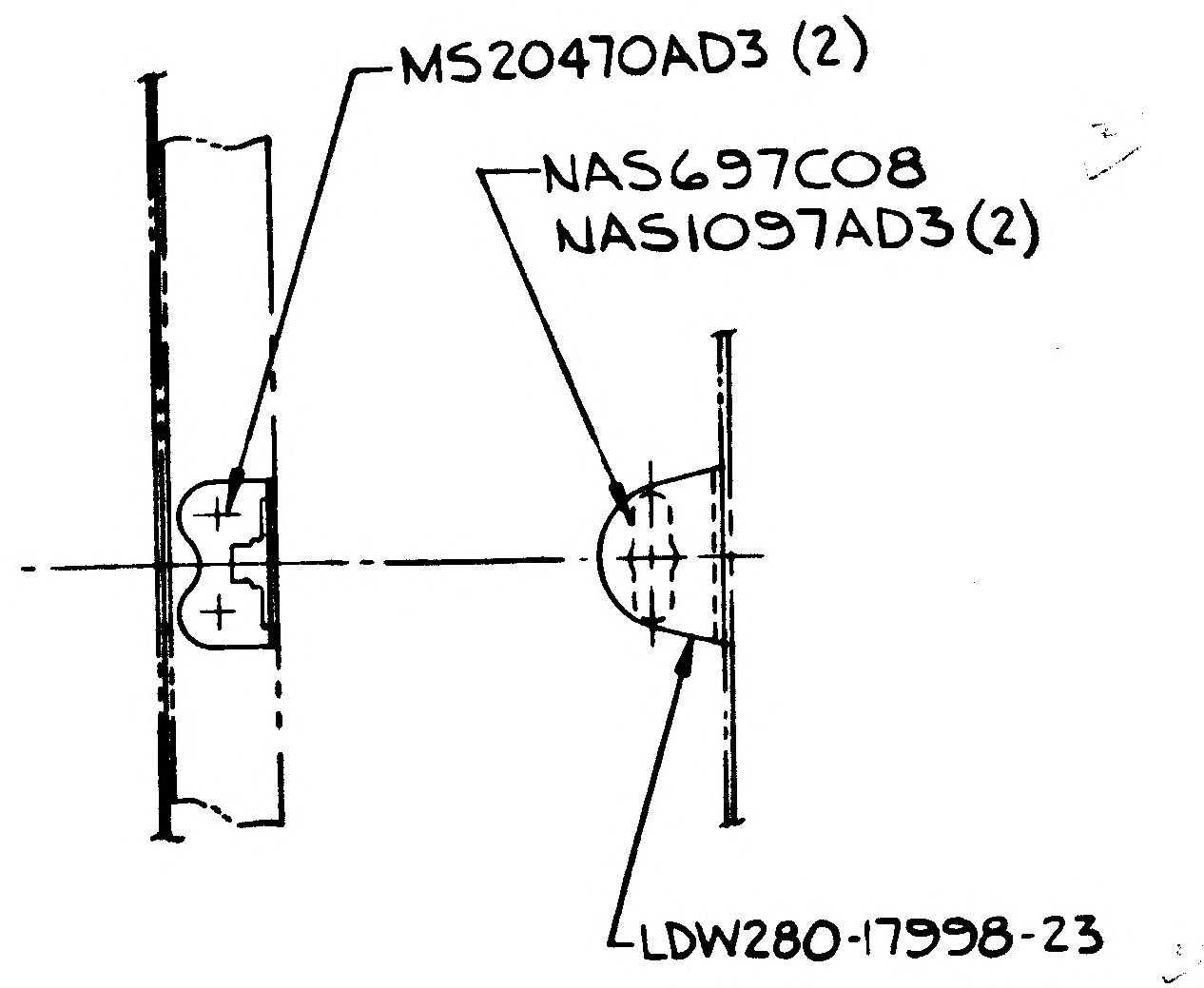
MS20470AD3 (2)
NAS697C08
NAS1097AD3 (2)
LDW280-17998-23

DETAIL AU (21 PLACES)
SCALE FULL
SH3 ZONE 9C

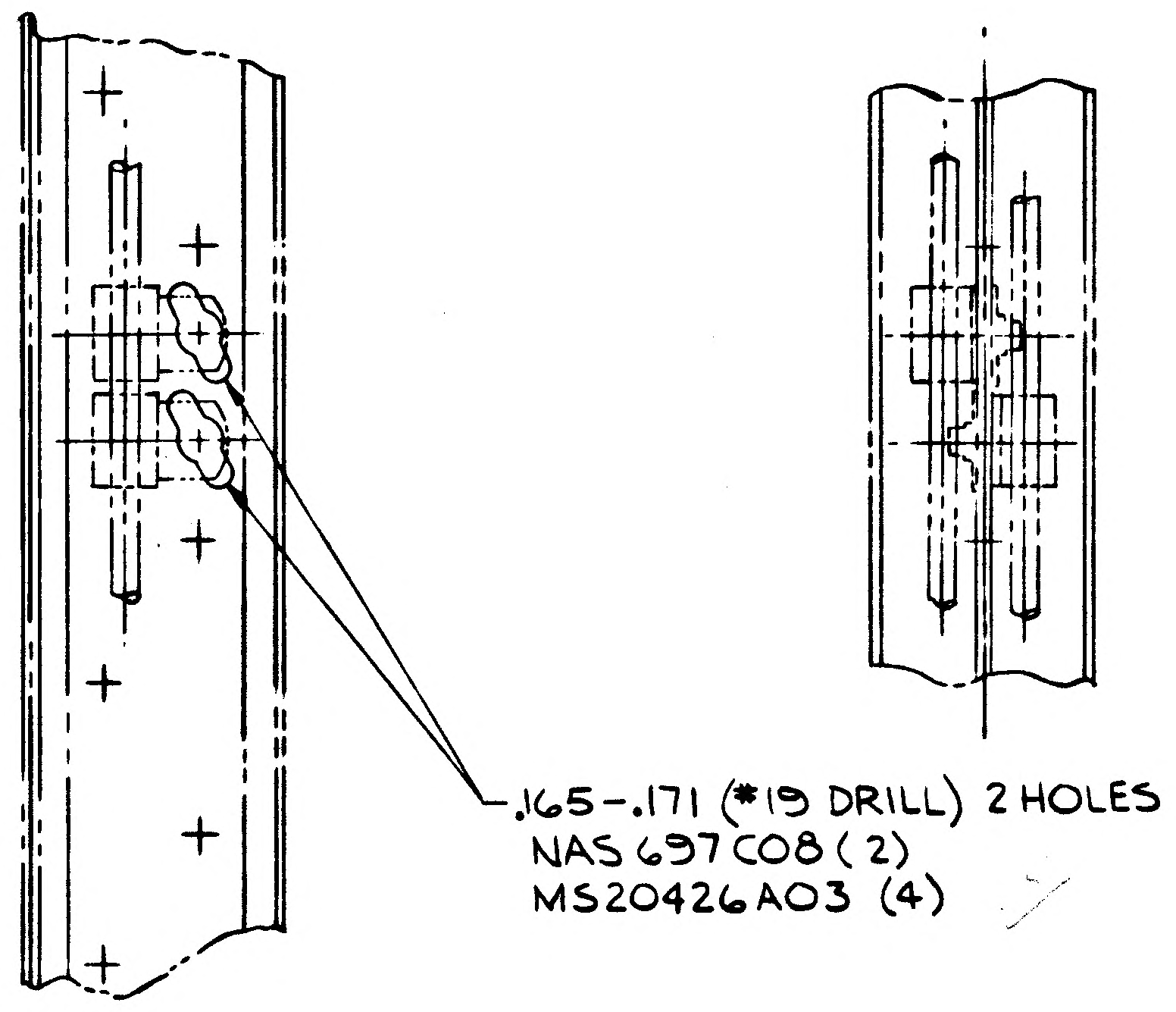
.165-.171 (#19 DRILL) 2 HOLES
NAS 697C08 (2)
MS20426A03 (4)

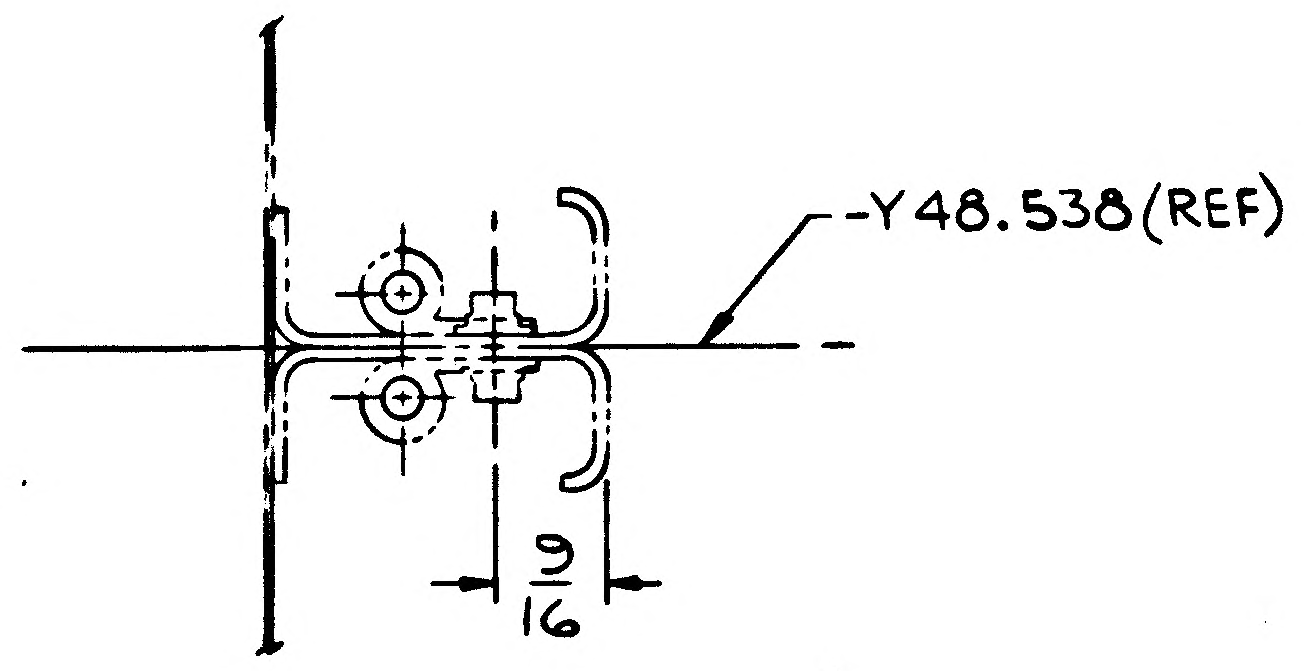
-Y48.538 (REF)
9/16

DETAIL AC (5 PLACES)
SCALE FULL
SH 3 ZONE 6D

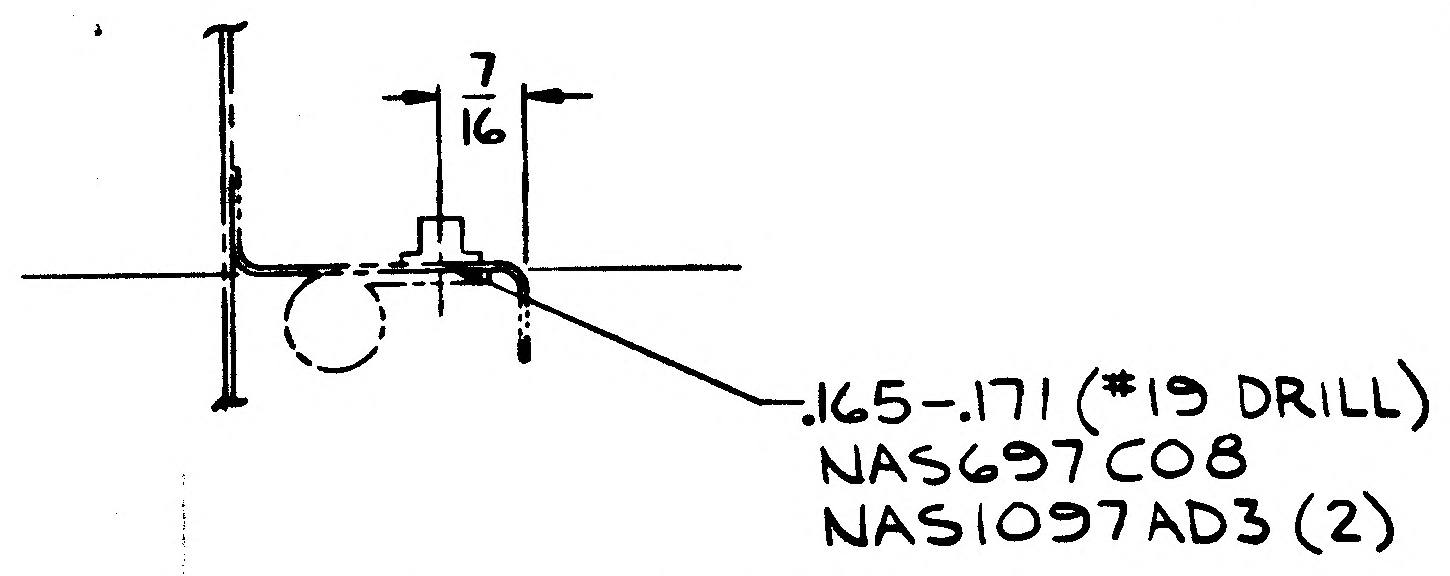
7/16
.165-.171 (#19 DRILL)
NAS697C08
NAS1097AD3 (2)

SECTION AV-AV (4 PLACES)
SCALE FULL
SH 3 ZONE 7A

NAS697C0
NAS1097 AD
-Y27.
+Z

01/03
NAS 9-1100

LDW280-51789 SH 4

23
22
21
20
1D-8-76
20470DD4
188 (REF)
331 (REF)
(2)
CES)
LDW280-17998-23
MS20470AD3 (2)
9/32
NAS697C08
NAS1097AD3 (2)
1/4
5/8
LDW280-17999-11
NAS697C08
NAS1097AD3 (4)
MS20470AD4 (4)
LDW280-18035-29
1/4
4 3/4
-Y27.00 (REF)
+Z 27.00 (REF)
.165-.171 (#19 DRILL) 2 HOLES
NAS 697C08 (2)
MS20426AD3 (4)
-Y48.538 (REF)
(5 PLACES)
3/16 (REF)
GB11D-8-76 (REF)
MS20470AD4 (2) (REF)
+X 196.00 (REF)
-Y38.483
LDW280-17998-23 (2)
8 3/4
MS20470AD3 (4)
5 1/16
9/32 (TYP)
23/32 (TYP)
30° (TYP)
15/16
LDW280-17998-11 (2)
MS20470AD3 (4)
NAS697C08 (2)
NAS1097AD3 (4)
+X 196.00 (REF)
.561-.570 (9/16 DRILL)
2 HOLES SECTION M-M
1 HOLE VIEW AB-AB
7.00
+Z 27.00 (REF)
MS20470AD4 (2)
NAS697C08 (3)
NAS1097AD3 (6)
+Y27.00 (REF)
BB
BB
1/4
5/8
1.02
MS20470AD4 (7)
LDW280-18035-27
LDW280-18035-23
LDW280-18035-21
NAS697C08 (2)
NAS1097AD3 (4)
1.93
LDW280-17998-23 REF
NAS697C08 (2)
NAS1097AD3 (4)
1 5/8
41/64
MS21266-1N
SEE NOTE #1
ACTUAL LENGTH 3.0
3/8
1/4
.165-.171 (#19 DRILL)
NAS697C08
MS20426AD3
SHIM AS REQD
SEE NOTE 2
SHIM
SEE N
3 3/4
2 27/32 (REF)
MS20470AD3 (4)
LDW280-17998-23 (2)
NAS697C08 (2)
NAS1097AD3 (4)
+Z38.483 (REF)
25°
23/32
.050
MS20470AD3 (2)
NAS697C08
NAS1097AD3 (2)
LDW280-17998-21
1/4
MS20470AD (2)

Ⓐ₂ SECTION AA-AA (2 PLACES)
SCALE FULL
SH 3 ZONE 6D

DETAIL AY (7 PLACES)
SCALE FULL
SH 3 ZONE 4C

Ⓐ₂ VIEW AK (2 PLACES)
SCALE FULL
ZONE 6C

SECTION M-M SH 3 ZONE 6A
VIEW AB-AB SH 3 ZONE 6C
SCALE FULL

Ⓐ₂ DETAIL Z
SCALE FULL
SH 3 ZONE 5C

SECTION BB-BB
SCALE FULL

Ⓐ₂ DETAIL AR (4 PLACES)
SCALE FULL
SH 3 ZONE 6B

Ⓐ₂ DETAIL W
SCALE FULL
SH 3 ZONE 5B

E 6D

DET
SCAL
SH 3

02/03 NAS 9-1100

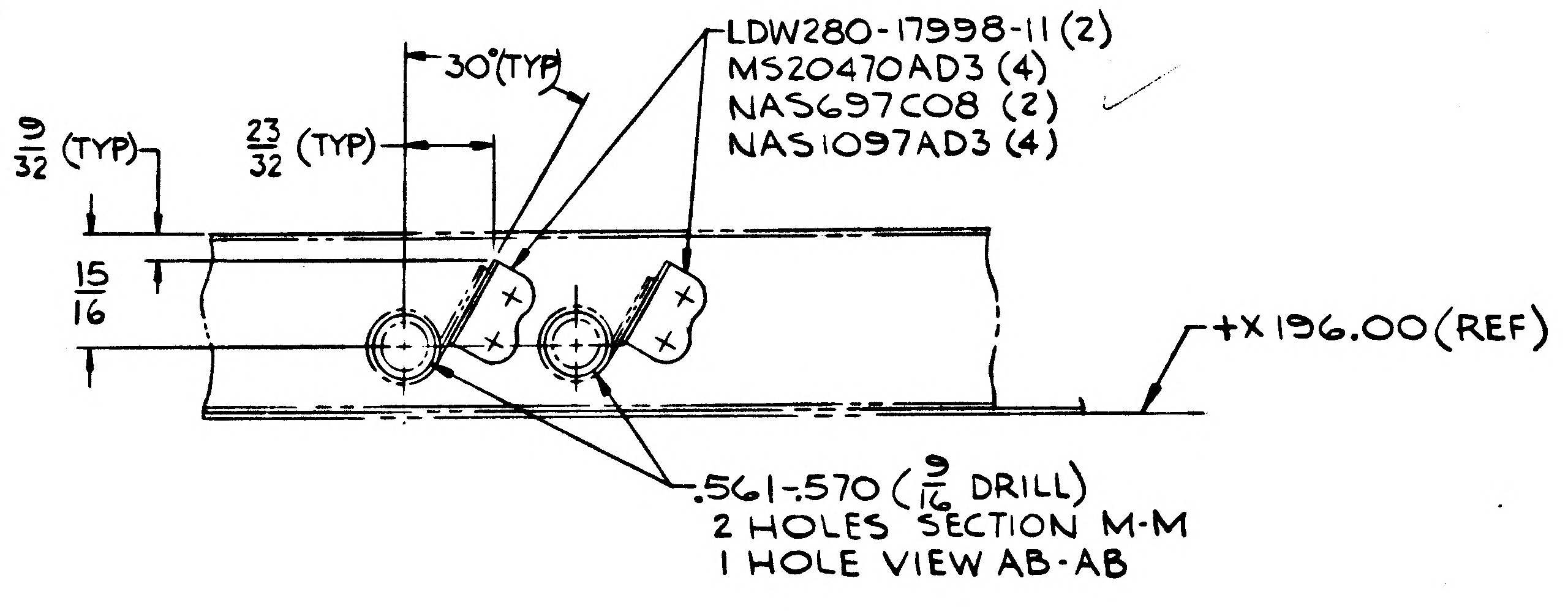

LDW280-17998-11 (2)
MS20470AD3 (4)
NAS697C08 (2)
NAS1097AD3 (4)
30°(TYP)
10/32 (TYP)
23/32 (TYP)
15/16
+X 196.00 (REF)
.561-.570 (9/16 DRILL)
2 HOLES SECTION M-M
1 HOLE VIEW AB-AB

SECTION M-M SH 3 ZONE 6A

VIEW AB-AB SH 3 ZONE 6C
SCALE FULL

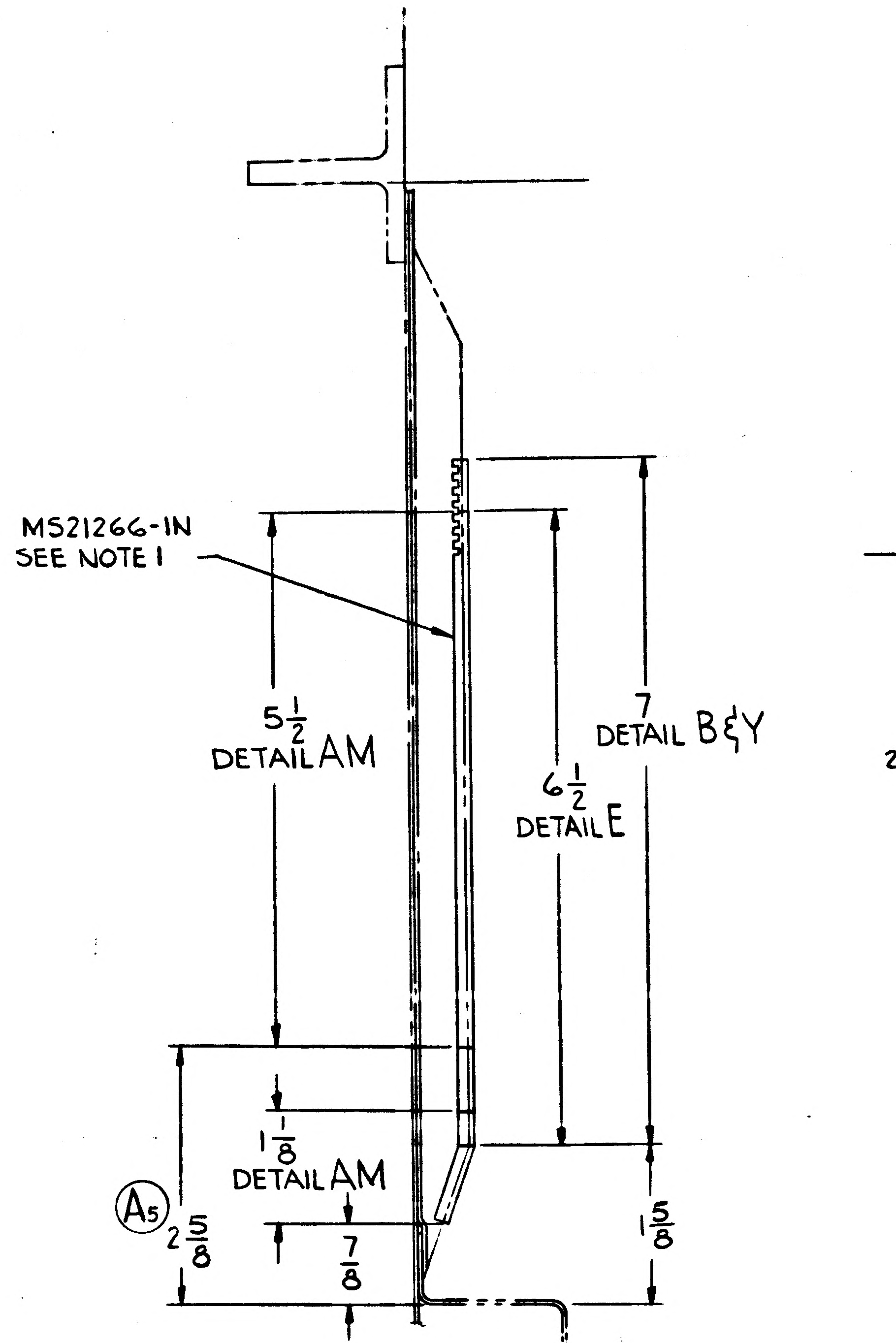

MS21266-1N
SEE NOTE 1
5 1/2
DETAIL AM
7
DETAIL B&Y
6 1/2
DETAIL E
1 1/8
DETAIL AM
A5
2 5/8
7/8
1 5/8

DETAIL B SH 3 ZONE 7B (5 PLACES)
DETAIL E SH 3 ZONE 7B (4 PLACES)
DETAIL Y SH 3 ZONE 6B (5 PLACES)
DETAIL AM SH 3 ZONE 7B
SCALE FULL

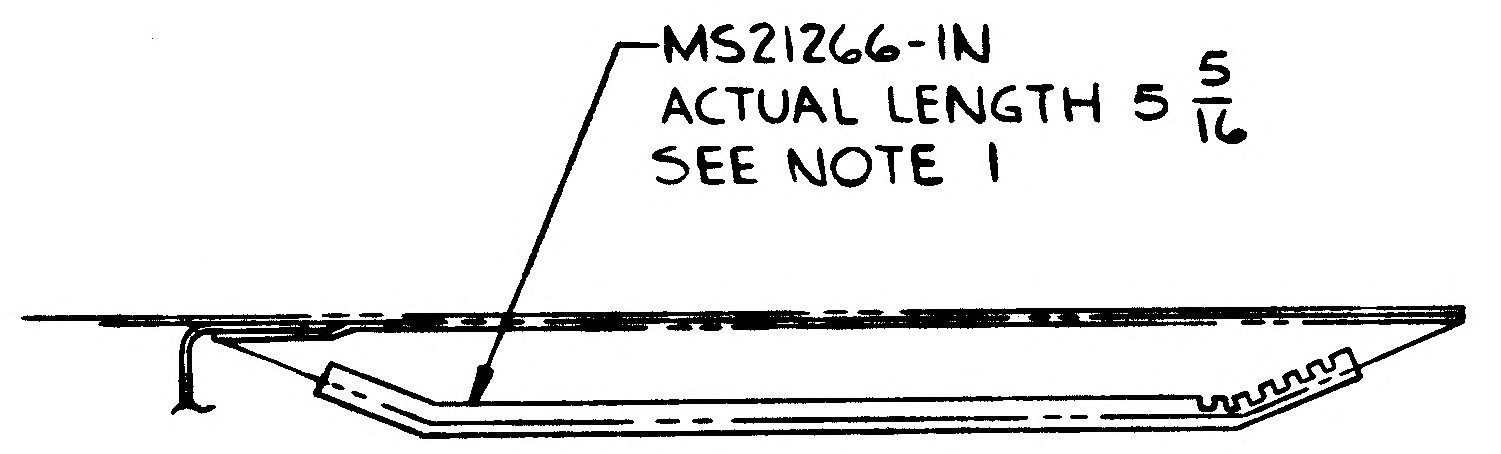

MS21266-1N
ACTUAL LENGTH 5 5/16
SEE NOTE 1

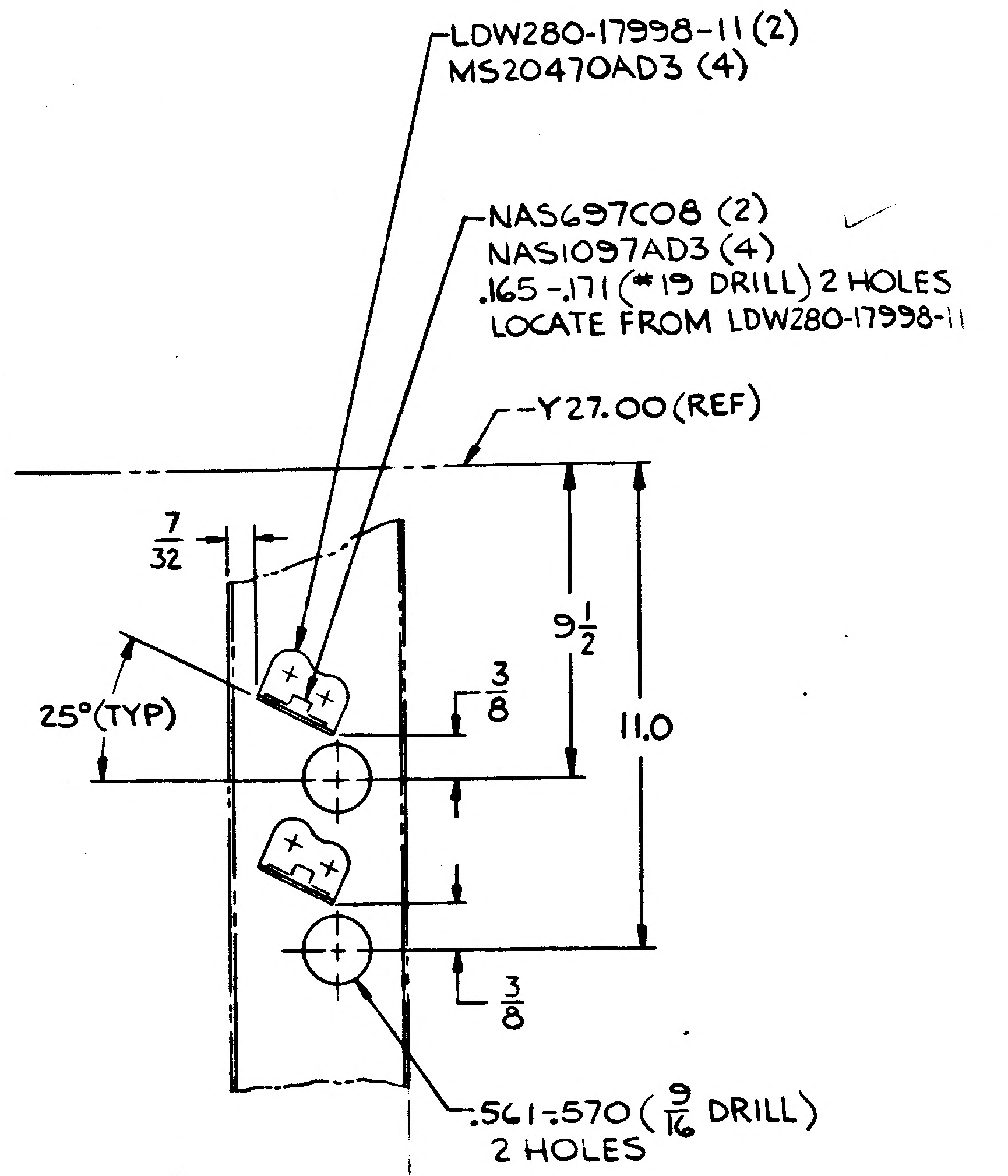

LDW280-17998-11 (2)
MS20470AD3 (4)
NAS697C08 (2)
NAS1097AD3 (4)
.165-.171 (#19 DRILL) 2 HOLES
LOCATE FROM LDW280-17998-11
-Y27.00 (REF)
7/32
25°(TYP)
9 1/2
3/8
11.0
3/8
.561-.570 (9/16 DRILL)
2 HOLES
A4

VIEW AS-AS
SCALE FULL
SH 3 ZONE 8C

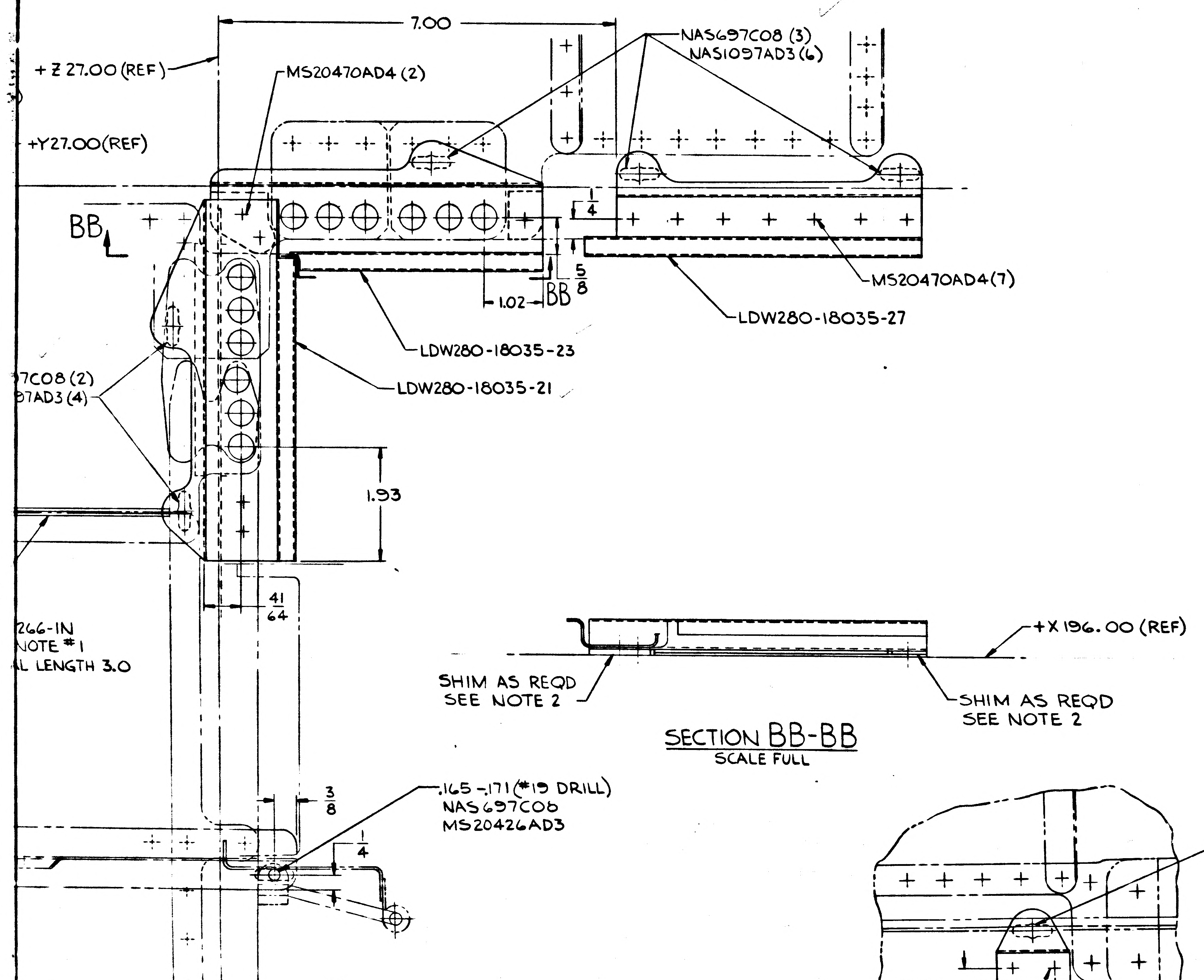

280-17998-23 (2)
AD3 (4)
7.00
+Z 27.00 (REF)
MS20470AD4 (2)
NAS697C08 (3)
NAS1097AD3 (6)
+Y27.00 (REF)
BB
1/4
5/8
1.02
BB
MS20470AD4 (7)
LDW280-18035-27
LDW280-18035-23
LDW280-18035-21
7C08 (2)
37AD3 (4)
1.93
41/64
266-1N
NOTE #1
L LENGTH 3.0
3/8
.165-.171 (#19 DRILL)
NAS697C06
MS20426AD3
1/4
(2)
(2)
+X 196.00 (REF)
SHIM AS REQD
SEE NOTE 2
SHIM AS REQD
SEE NOTE 2
A2

SECTION BB-BB
SCALE FULL

DETAIL W
SCALE FULL
SH 3 ZONE 5B

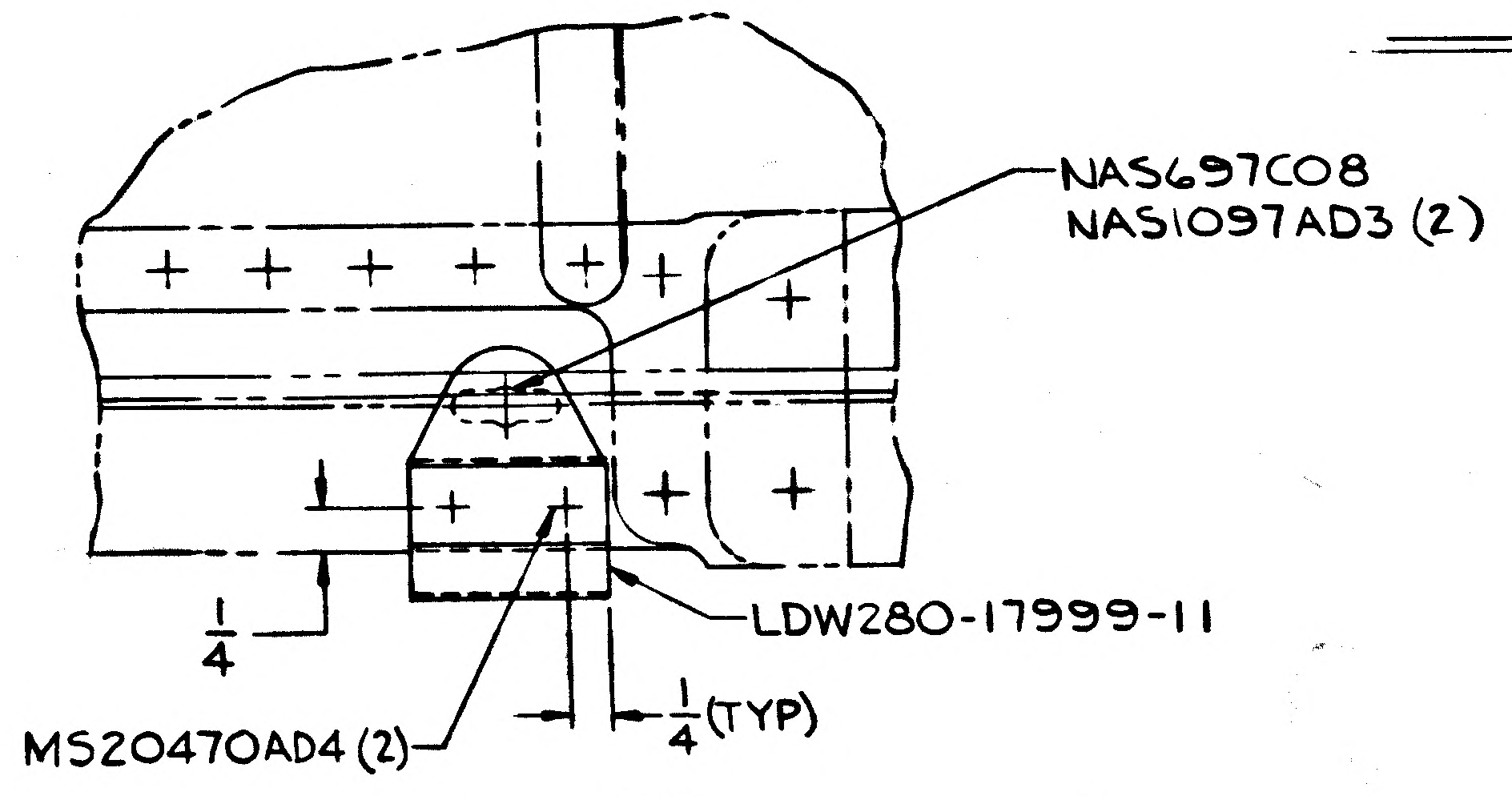

NAS697C08
NAS1097AD3 (2)
LDW280-17999-11
1/4
MS20470AD4 (2)
1/4 (TYP)

DETAIL AW
SCALE FULL
SH 3 ZONE 4B

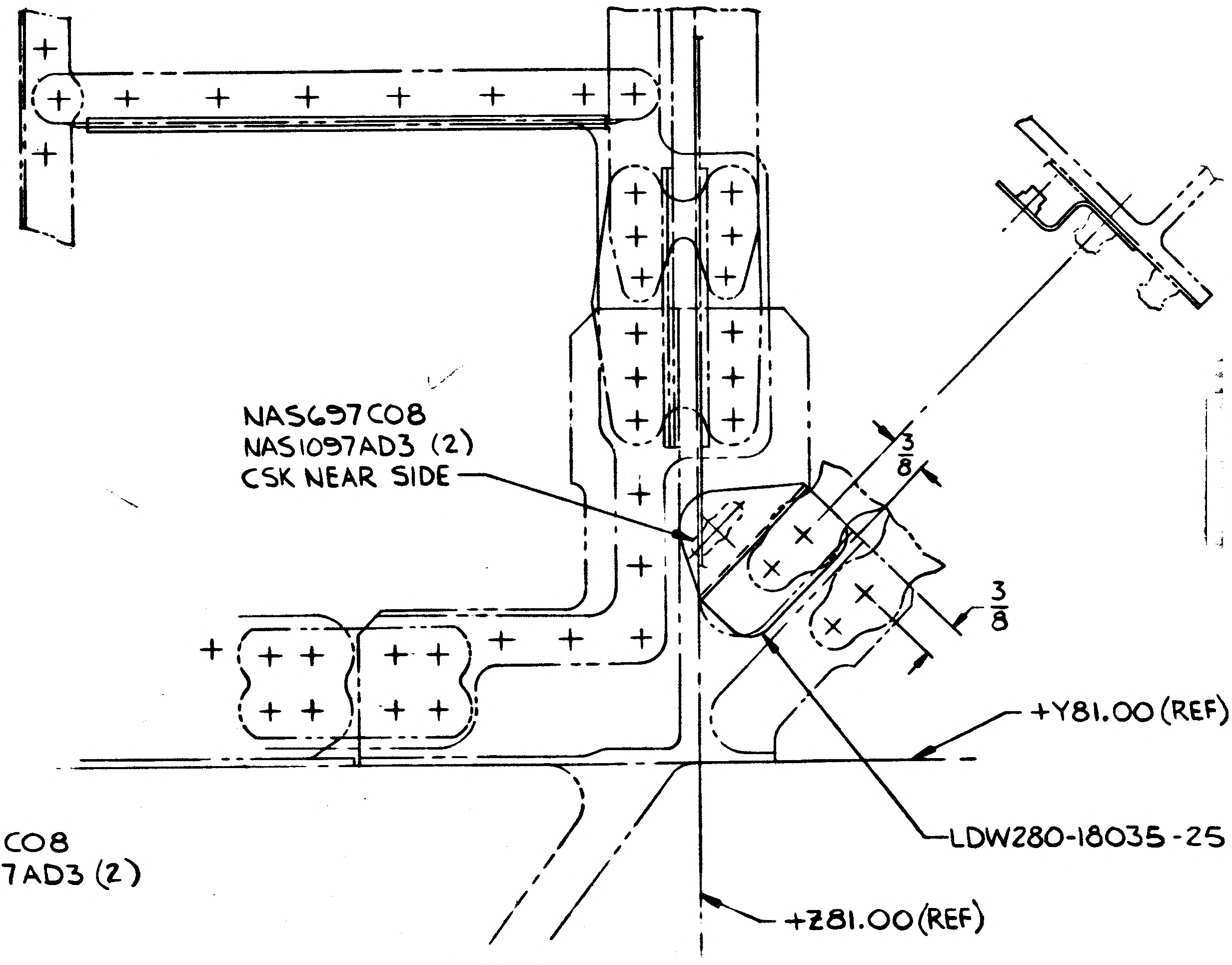

NAS697C08
NAS1097AD3 (2)
CSK NEAR SIDE
3/8
3/8
+Y81.00 (REF)
LDW280-18035-25
+Z81.00 (REF)
A2

DETAIL V
SCALE FULL
SH 3 ZONE 5A

03/03 NAS 9-1100

MANUFACTURING OPERATIONS

UNLESS OTHERWISE SPECIFIED
NOTES CHECKED √ APPLY TO THIS DWG.

PART NUMBER
AND ALL OTHER MARKINGS
IN REGION MARKED ⊠
USE BOTH SIDES IF NECESSARY.

FILLET AND INSIDE CORNER
RADII TOLERANCES
.016R TO .062R ± .010
.063R TO .250R ± .015
OVER .250R ± .030

DEPTH SHOWN FOR TAPPED
HOLES IS FULL THDS. 2-3 IMP THDS.
BEYOND PERMISSIBLE.

EXTERNAL THREAD LENGTH
SHOWN INCLUDES
2 IMPERFECT THREADS MAX.

DO NOT CADMIUM PLATE & PAINT
HOLES OR SURFACES MARKED
WITH DOUBLE ASTERISK.

MISMATCH STEP OF ± .005
PERMISSIBLE DUE TO CHANGE
OF CUTTERS AT INSIDE
INTERSECTING SURFACES.

DIAMETERS MARKED
MUST BE CONCENTRIC WITHIN
FULL INDICATOR
READING

HOLES MUST BE KEPT FREE OF
CHROME PLATING SOLUTION.

ALL DIMENSIONS SHOWN TO BE MET
AFTER CADMIUM PLATING.
THICKNESS OF PLATE .0003 MIN.
TO .0005 MAX. MIN. THICKNESS TO
BE .0002 ON THREADED AREAS.
NO ALLOWANCE FOR PLATING IN
HOLES

125 SURFACE ROUGHNESS
INCLUDING REAMED HOLES
PER MIL-STD-10

200 FOR ALL DRILLED HOLES

REMOVE ALL BURRS.
BREAK ALL EDGES .015-.031

INSPECTION INFORMATION
MINIMUM PERMISSIBLE
AVERAGE EDGE DISTANCE
MARKED IS

SYMBOL √ DENOTES SURFACE
TO BE MACHINED

UNLESS OTHERWISE SPECIFIED
TOLERANCE ON FLANGES IS ± 1/32

LENGTHS OF AN, NAS & MS AL ALY
RIVETS SHORTER THAN 1 INCH ARE
NOT SPECIFIED.

TOLERANCE ON LOFTED
DELINEATIONS IS

DWG SIZE 34 X 121

PRINTING INFO ONLY
FULL SIZE SHEET AREA (36 X 123)= 30.75 SQ. FT.
1/2 SIZE SHEET AREA (1/4 OF FULL)= 7.688 SQ. FT.

PRINT TRIM LINE

LDW280-51789 A

LDW280-51789 A

LDW280-51789 SH 4

GRUMMAN AIRCRAFT ENGRG CORP., BETHPAGE, L. I., NEW YORK

SIZE J	CODE IDENT NO. 26512	LDW280-51789	A
MODEL OR END ITEM LM	SCALE 1/4 & NOTED		SHEET 4.00

3 FRAMES

ENG 32.1 REV 3-65

GRUMMAN AIRCRAFT ENGINEERING CORP.
CODE IDENT NO. 26512
ENGINEERING ORDER

DWG. NO. LDW280 51789		EO NO. A4
CONTROL INFO NO. LDW280-A-0015		

IN F/D & B/M ADD CLIPS AS SHOWN

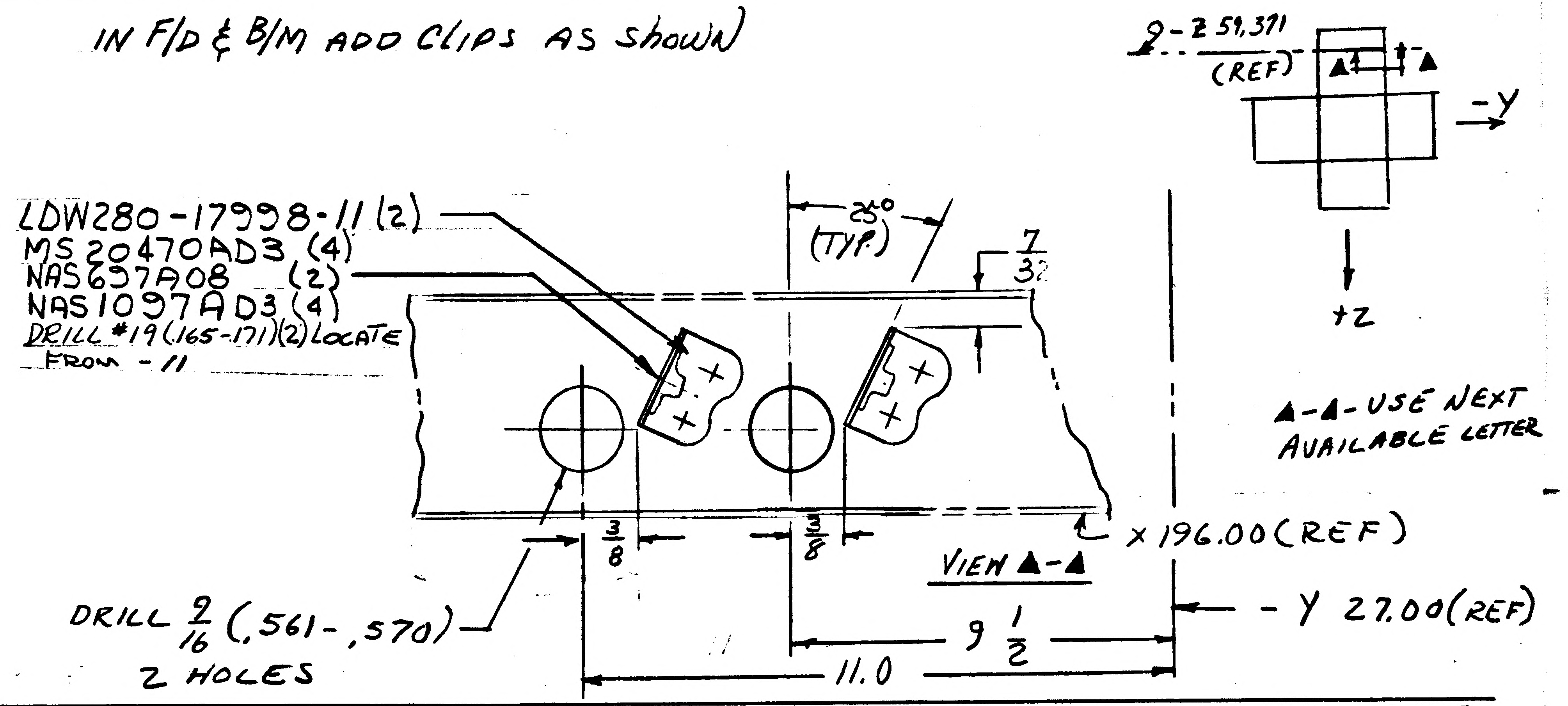

9-Z 59.371 (REF)
-Y
+Z
LDW280-17998-11 (2)
MS20470AD3 (4)
NAS697A08 (2)
NAS1097AD3 (4)
DRILL #19 (.165-.171) (2) LOCATE FROM -11
25° (TYP)
7/32
▲-▲ USE NEXT AVAILABLE LETTER
3/8
3/8
X 196.00 (REF)
VIEW ▲-▲
DRILL 9/16 (.561-.570) 2 HOLES
9 1/2
11.0
-Y 27.00 (REF)

DETAIL SPEC REQ	☐	CL II ENGRG CHG	☐	CL I ENGRG CHG	☐

REASON FOR EO: ADDITIONAL CLIPS REQU'D FOR ELEC. LINE

DESCRIPTION OF EO: ON-3 INSTL: ADDED VIEW ▲-▲, DRILL 9/16 (.561-.570) (2 HOLES) ADDED LDW280-17998-11(2), MS20470AD3(4) NAS 697A08 (2) & NAS1097AD3(4) DRILL #19 HOLE (2)

GAEC EO RELEASE: FR 9/1/66

MODEL	PROCURING ACTIVITY NO.	GAEC UNIT NO.	SUB CONTR UNIT NO.
LEM		LEM 1, 31	

DRAWING CHANGE REQD		DISPOSITION OF PARTS	
✓		✓	
REVISE DWG	RECORD EO	REWORK	SCRAP

APPROVED BY	WT	LBG	.	~	wjd		RMC (W)	
DATE	9/1/66	9/19/66		~	9/1/66		9-14	9/13/66
9-1-66	VOE	~~SUPPORT~~ WTS	RELIAB. GROUP	GROUP LEADER	STRESS GROUP	LIAISON ENGRG	PROJ ENGRG	~~GOVT~~

PRIORITY	DRAWING TITLE	DRAWING NO.	EO NO.
C	SUPPORT INSTL. D/S ELECTRICAL LINES	LDW280-51789	A4

ISSUED BY F LANZARO D. REGAS SECTION YD1 GROUP NO. 335 PL 5 WT

01

NAS 9-1100

LDW280-51818 A

MODEL OR END ITEM	NEXT ASSY	MODULE OR SER NO.	REQD PER MODULE OR END ITEM
LM	LDW280-58553	LM-15(45)	1
↑		THRU	
	LDW280-58553	LM-8(38)	1
	LDW280-56553	LM-7(37)	1
	LDW 280-56553	LM-6(36)	1
	LDW 280-54553	LM-5(35)	1
	LDW 280-54553	LM-4(34)	1
	LDW 280-52553	LM-3(33)	1
	LDW 280-52553	LM-2(32)	1
↓ LM	LDW 280-51553	LM-1(31)	1

PART NO. LDW280-51818-1

GAEC SCH NO. 523

(5)

SH REV STATUS: FOR DESCRIPTION OF REV SEE SUBQ SH

SHEET	1.00	1.10	2.00		3.00				
REV	A	A	A		A				
SHEET									
REV									
SHEET									
REV									

LAST SECT LTR USED G

LAST DASH NO. USED -3

GRUMMAN REL INFO \ A

PRIM NO. 220 DK(001) ME-1A 3/28/9 EMF

UNLESS OTHERWISE SPECIFIED DIMENSIONS ARE IN INCHES.
TOLERANCE UNLESS SPECIFIED
FRACTIONS - DECIMALS - ANGLES
±1/16 ±.020 ±1/2°

ORIG DWG AUTH
DETAIL SPEC REQUIREMENT
CLASS II ENGRG CHANGE
CLASS I ENGRG CHANGE

CONTRACT NO. NAS 9-1100
LINE ITEM #1
DOCUMENTATION TYPE II

DRAWN BY	Zuva 9/1/66	WEIGHTS	9-29
LAYOUT BY	Zuva 9/8/66	RELIABILITY	
CHECKED BY			10/21/66
GR. LEADER	9/15/66		
VEH. DESIGN			
STRUCTURE	EB 9/16/66	PROJ ENGR	R.M. Carbee 9-17
STRUCTURES	Hillerman 9-16	REL GROUP	J. Pagliaro 10/28/66

GRUMMAN AIRCRAFT ENGRG CORP
BETHPAGE, L. I., NEW YORK

SHIELD ASSY - QUAD II:
DESCENT STAGE, METEOROID
PROTECTION, LOWER

SIZE B | CODE IDENT NO. 26512 | LDW280-51818 A

SCALE NONE | SHEET 1 OF 4

CDR - 9/16/66

ENG 77.1 12-65

01 NAS 9-1100

REVISIONS FOR CONTINUATION OF REVISIONS SEE SHEET ______

CHANGE LTR	ITEM NO.	SHEET NO.	ZONE	GRUMMAN INFO ONLY	DET SPEC	CLASS I	CLASS II	ENGRG ORDER	DESCRIPTION	EFFECTIVITY	DISPOSITION OF EXISTING PARTS		CHANGED BY AND DATE	ENGRG APPD	GOVT APPD
											REWORK	SCRAP			
									RETRACED SH3.00 NO CHG LAST REV.NC HSTEVES 3-19-69 ADDED SH.1.10				L.D.		
A	1	2.00							INC. E.O. A1	LM-1 THRU LM-6			H. STEVES 3-19-69 L.D.		3-28-69
	2	3.00							INC. E.O A2						
	3	1.00							INC. LE0280-476	LM-7 THRU LM-15					
	4	3.00							INC. E.O A4	LM-1 THRU LM-15					
	5	3.00							INC. E.O. A5						
	6	1.00							INC. LE0280-1170	LM-6 THRU LM-15					
	7	1.00						②	INC. LE0280-1292	LM-8 THRU LM-15					

CHG APPROVED

LTR	GROUP LDR	VEH DES INT	STRUCT	STRUCT	WEIGHTS	RELIABILITY
A						

GRUMMAN AIRCRAFT ENGRG CORP., BETHPAGE, L. I., NEW YORK

SIZE	CODE IDENT NO.		
B	26512	LDW280-51818	A

SCALE NONE SHEET 1.10

②

E 77.16 3-66

01

NAS 9-1100

QTY PER ASSEMBLY							CODE IDENT	PART NO.	I&T	NOMENCLATURE OR DESCRIPTION	MATERIAL	GOVT SPEC	COML SPEC	STOCK SIZE	PROCESS SYM	FINISH NO.	ZONE
					-3	-1											
				1				LDW280-18119-19	E	DOUBLER	SEE DWG						5C
				1				-17		DOUBLER							3C
				1				-15		STIFF							4B
				1				-13		STIFF							5C
				1				LDW280-18119-11		WEB	SEE DWG						3A
						1		LDW280-51818-3		WELD ASSY.					NONE	#76	4A
								LDW280-51818-1	E	INSTL.					NONE	NONE	4A

SYM OR NO.	PROCESS OR FINISH	GRUMMAN SPEC OR MILITARY SPEC	SYM OR NO.	PROCESS OR FINISH	GRUMMAN SPEC OR MILITARY SPEC	SYM OR NO.	PROCESS OR FINISH	GRUMMAN SPEC OR MILITARY SPEC
						*76	ALODINE	LSP14-9010

I & T: IDENTIFICATION AND TRACEABILITY IN ACCORDANCE WITH : NONE

GRUMMAN AIRCRAFT ENGRG CORP, BETHPAGE, L. I., NEW YORK

SIZE	CODE IDENT NO.		
B	26512	LDW280-51818	A

SCALE NONE

SHEET 2.00

①

ENG 77.2 7-65

01

NAS 9-1100

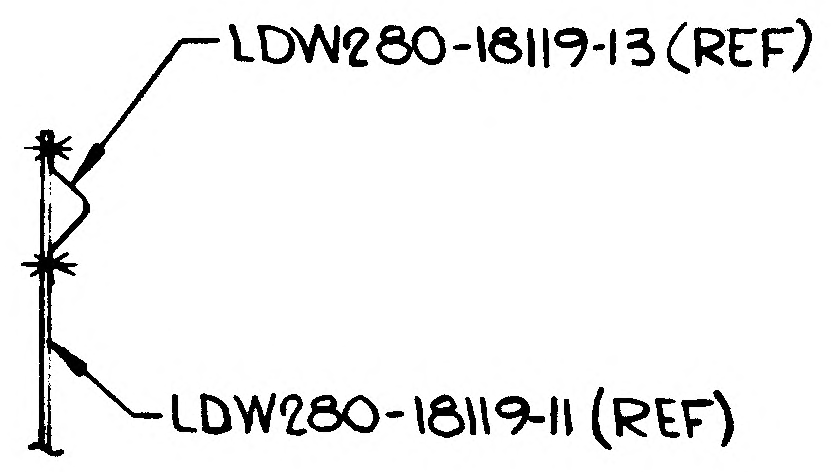
LDW280-18119-13 (REF)
LDW280-18119-11 (REF)

SECTION A-A (ZONE 4C)

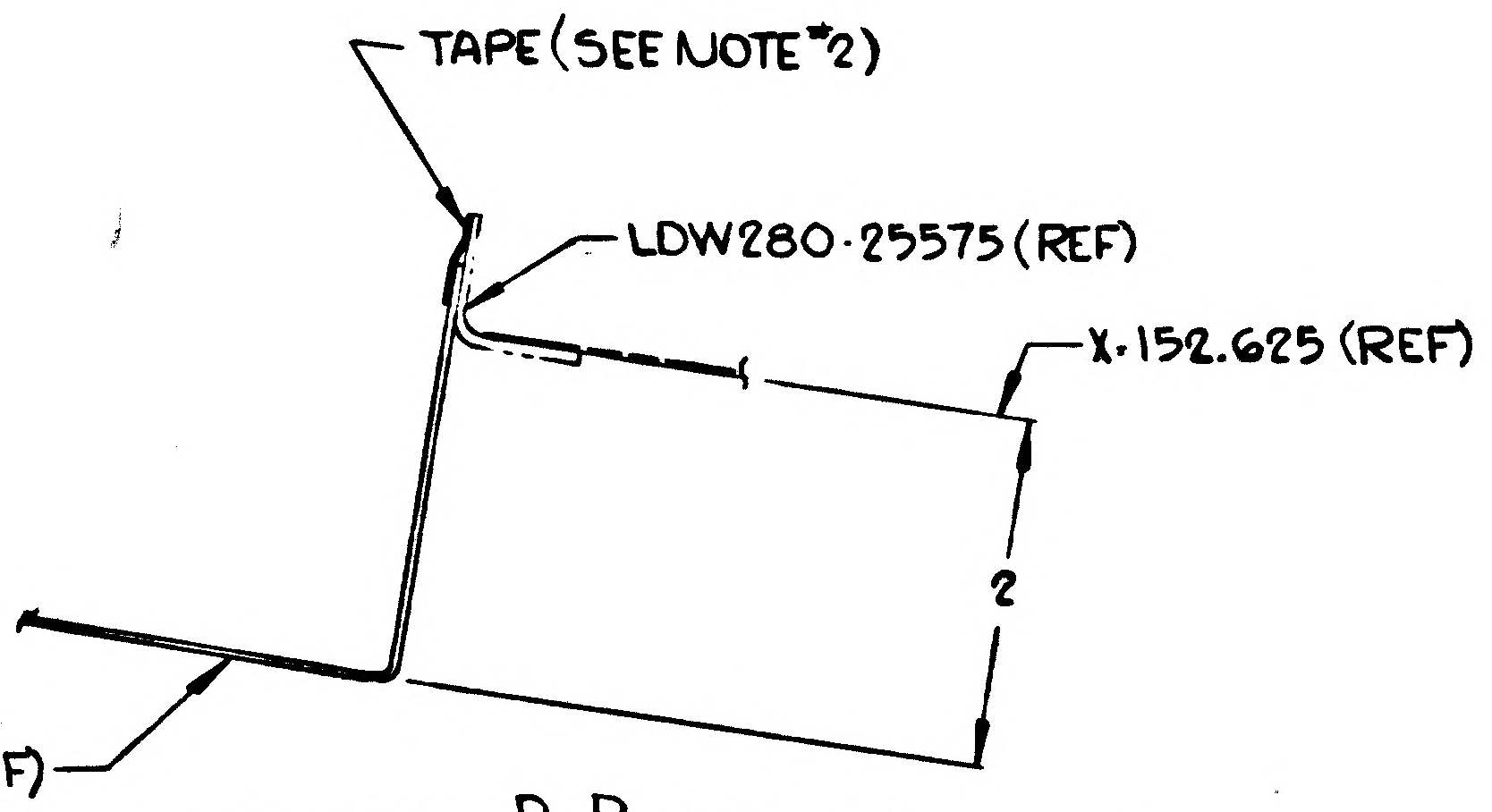
TAPE (SEE NOTE #2)
LDW280-25575 (REF)
X-152.625 (REF)
2
LDW280-18119-11 (REF)

SECTION B-B (SHOWN) (ZONE 3B)
SECTION C-C (OPP.) (ZONE 5B)

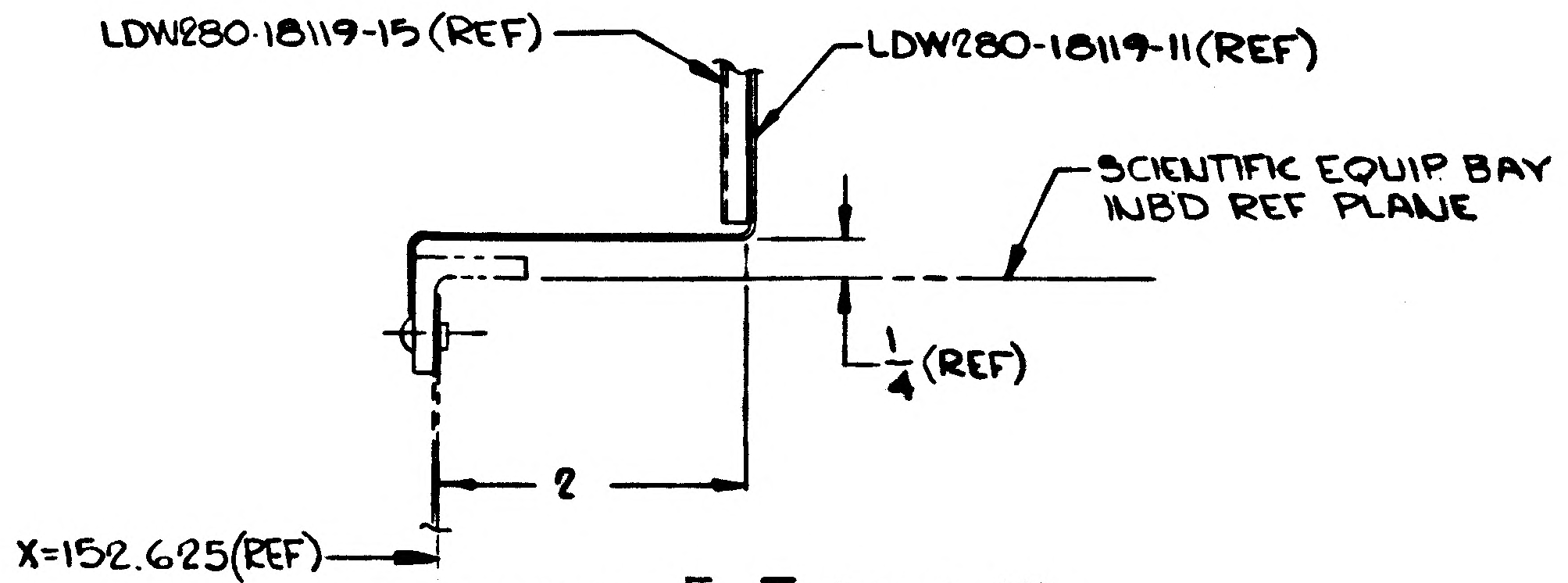
LDW280-18119-15 (REF)
LDW280-18119-11 (REF)
SCIENTIFIC EQUIP BAY INBD REF PLANE
1/4 (REF)
2
X=152.625 (REF)

SECTION E-E (ZONE 4A)

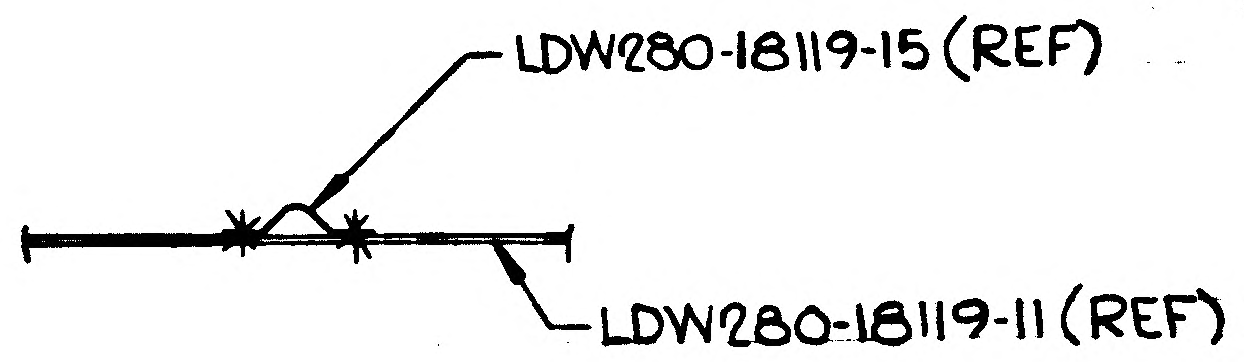
LDW280-18119-15 (REF)
LDW280-18119-11 (REF)

SECTION D-D (ZONE 4B)

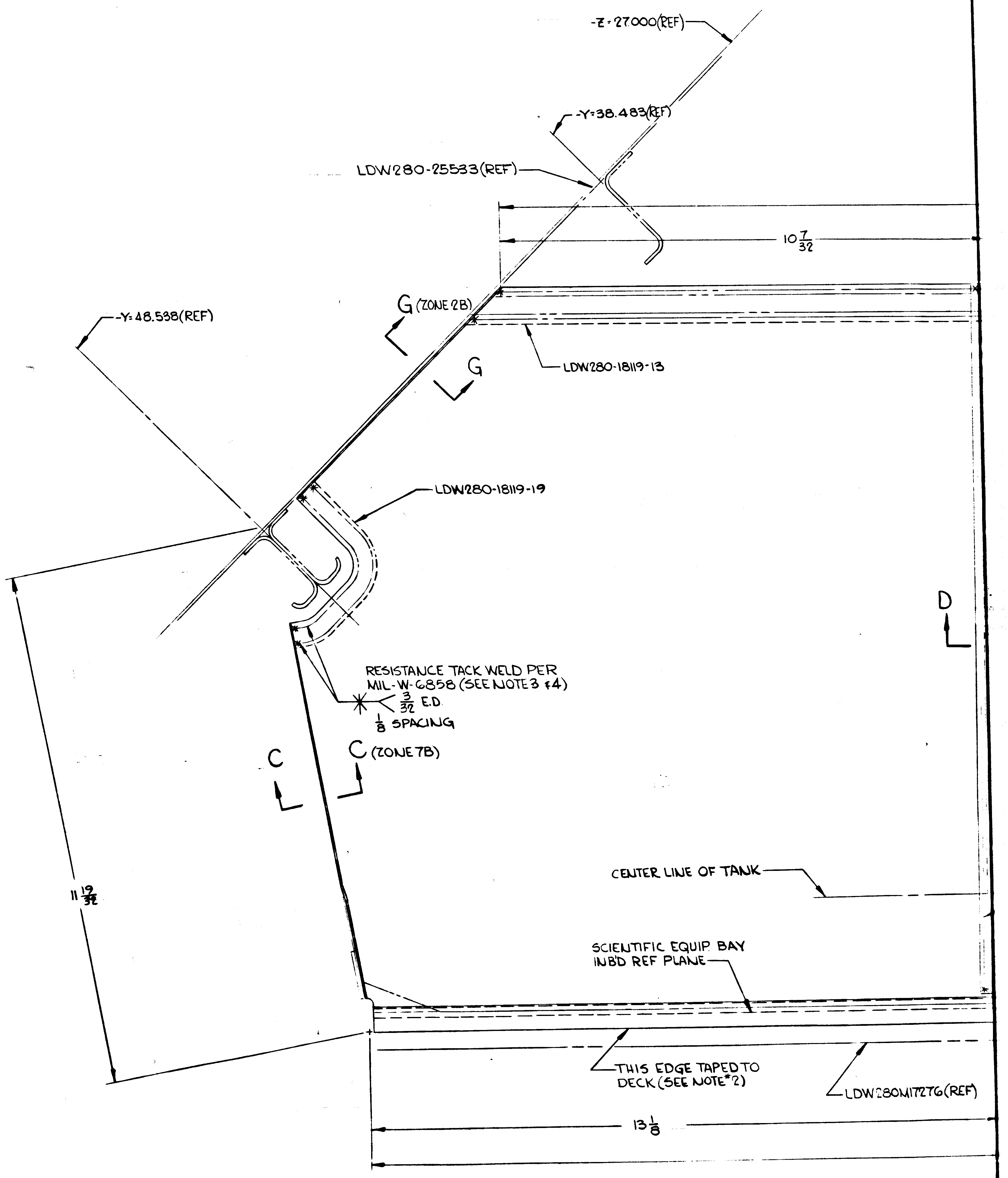
-Z-27.000 (REF)
-Y-38.483 (REF)
LDW280-25533 (REF)
10 7/32
G (ZONE 2B)
G
-Y-48.538 (REF)
LDW280-18119-13
LDW280-18119-19
D
RESISTANCE TACK WELD PER MIL-W-6858 (SEE NOTE 3 & 4)
3/32 E.D
1/8 SPACING
C
C (ZONE 7B)
11 19/32
CENTER LINE OF TANK
SCIENTIFIC EQUIP BAY INBD REF PLANE
THIS EDGE TAPED TO DECK (SEE NOTE #2)
LDW280M17276 (REF)
13 1/8

LDW280-518

VIEW LOOKIN

01/02 NAS 9-1100

CODE IDENT NO	DWG NO	SHEET
26512	LDW280-51818	3

FRAME 1 FRAME 2

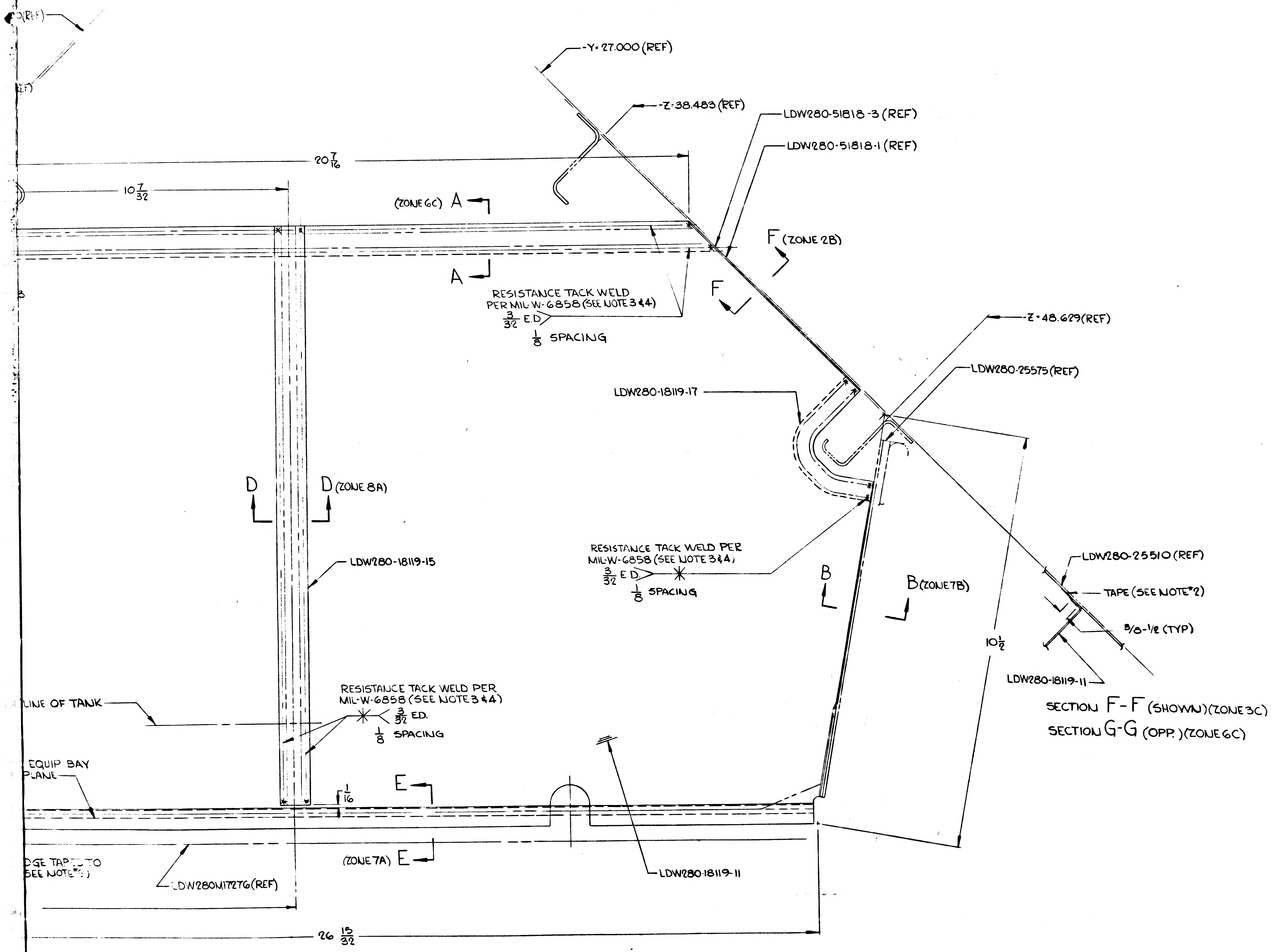
-Y-27.000 (REF)
-Z-38.483 (REF)
LDW280-51818-3 (REF)
LDW280-51818-1 (REF)
20 7/16
10 7/32
(ZONE 6C) A
A
F (ZONE 2B)
F
RESISTANCE TACK WELD PER MIL-W-6858 (SEE NOTE 3 & 4)
3/32 E.D.
1/8 SPACING
-Z-48.629 (REF)
LDW280-25575 (REF)
LDW280-18119-17
D
D (ZONE 8A)
LDW280-18119-15
RESISTANCE TACK WELD PER MIL-W-6858 (SEE NOTE 3 & 4)
3/32 E.D.
1/8 SPACING
B
B (ZONE 7B)
LDW280-25510 (REF)
TAPE (SEE NOTE 2)
3/8-1/2 (TYP)
10 1/2
LDW280-18119-11
SECTION F-F (SHOWN) (ZONE 3C)
SECTION G-G (OPP.) (ZONE 6C)
LINE OF TANK
RESISTANCE TACK WELD PER MIL-W-6858 (SEE NOTE 3 & 4)
3/32 E.D.
1/8 SPACING
EQUIP BAY PLANE
1/16
E
(ZONE 7A) E
DGE TAPE TO SEE NOTE 2)
LDW280M172T6 (REF)
LDW280-18119-11
26 15/32

LDW280-51818-1 INSTL
-3 WELD ASSY

VIEW LOOKING DOWN

NOTES:

1. NO TOOLING HOLES PERMITTED.
2. POLYMIDE PRESSURE SENSITIVE TAPE, 1 IN WIDE NO X-1156, MAY BE PURCHASED FROM MINN. MINING & MFG. CO. OR EQUIVALENT. (CODE IDENT 7638)
3. WELD THRU SEALANT LSP 14.400.
4. WELD IN ACCORDANCE WITH MIL-W-6858.
5. DURING INSTL OR ASSY OF METEOROID SHIELD SUB-ASSY'S OR DETAILS, PARTS MAY BE TRIMMED TO INSURE PROPER CLEARANCE WITH STRUCTURAL PENETRATIONS, PROPELLANT & ELECTRICAL LINES. MIN CLEARANCE AFTER TRIM TO BE 1/32, MAX CLEARANCE TO BE 1/4, PROVIDING A MIN. FASTNER EDGE DISTANCE IS HELD TO 1 1/2 FASTNER DIA.
6. ON -1 INSTL. LDW280-18119-11 FLANGES MAY RIDE RIVET HEADS & ELECTRICAL CLIPS AND #X1156 TAPE SHALL BE APPLIED TO BOTH SIDES OF SHIELD TO SEAL GAPS.

DWG 771.2 4-67

SUPPLEMENTARY DATA UNLESS OTHERWISE SPECIFIED NOTES CHECKED ✓ APPLY TO THIS DWG.	
MARK PART NUMBER IN ACCORDANCE WITH MIL-STD-130.	
STAMP PART NUMBER AND ALL OTHER MARKINGS IN REGION MARKED ☒ USE BOTH SIDES IF NECESSARY.	✓
LENGTHS OF AN, NAS & MS AL ALY RIVETS SHORTER THAN 1 INCH ARE NOT SPECIFIED.	
INSTALL RIVETS IN ACCORDANCE WITH	

PRINTING INFO ONLY
FULL SIZE SHEET AREA (36 X 98) = 24.5 SQ FT
1/4 SIZE SHEET AREA (1/4 OF FULL) = 6.5 SQ FT
PRINT TRIM LINE

02/02

NAS 9-1100

GRUMMAN AIRCRAFT ENGRG CORP. BETHPAGE, L. I., NEW YORK

SIZE	CODE IDENT NO.		
J	26512	LDW280-51818	A
SCALE FULL		SHEET 3.00	

SUPERSEDES LDW280-51818 UC 10-25-66 2FR

LDW280-51818 A

W280-51818 SHEET 3

ENG 32.1 REV 3-65

*

GRUMMAN AIRCRAFT ENGINEERING CORP.
CODE IDENT NO. 26512
ENGINEERING ORDER

DWG. NO. LDW280-51818 | EO NO. A1
CONTROL INFO NO. LDW280A-0947

IN B/M

LDW 280-51818-3 WELD ASSY add: | #76 |
FINISH
SPEC-LSP14-9010

3

DETAIL SPEC REQ		CL II ENGRG CHG		CL I ENGRG CHG	

REASON FOR EO: FINISH REQ'D AFTER WELDING FOR CORROSION PROTECTION

DESCRIPTION OF EO: ADDED FINISH #76 TO-3 WELD ASSY

Ⓡ GAEC EO RELEASE: UE 10/6

MODEL	EFFECTIVITY: PROCURING ACTIVITY NO.	GAEC UNIT NO.	SUB CONTR UNIT NO.
LM		LM1(31) THRU LM6(36)	

DRAWING CHANGE REQD		DISPOSITION OF PARTS	
✓		✓	
REVISE DWG	RECORD EO	REWORK	SCRAP

APPROVED BY							RMC(E)	
DATE	10/4/66				10/5/66		10-8	10/7/66
✓	VD1	SUPPORT	RELIAB. GROUP	GROUP LEADER	STRESS GROUP	LIAISON ENGRG	PROJ ENGRG	

PRIORITY: C

DRAWING TITLE: SHIELD ASSY - QUAD II, D.S. METEOROID PROTECTION, LOWER

DRAWING NO. LDW280-51818

EO NO. A1

ISSUED BY ZUVER X1153 10/3/66 SECTION VD1 GROUP NO._____ PL 35

EMF

01 NAS 9-1100

B

ENG 32.1 REV 3-65

GRUMMAN AIRCRAFT ENGINEERING CORP.
CODE IDENT NO. 26512
ENGINEERING ORDER

EMF-A

DWG. NO. LDW280 51818		EO NO. A2
CONTROL INFO NO. LM 5-11685		

IN F/D ADD NOTE* (USE NEXT AVAIL NO)

* DURING INSTL OR ASSY OF METEOROID SHIELD SUB-ASSY'S OR DETAILS, PARTS MAY BE TRIMMED TO INSURE PROPER CLEARANCE WITH STRUCTURAL PENETRATIONS, PROPELLANT & ELECTRICAL LINES. MIN CLEARANCE AFTER TRIM TO BE 1/32, MAX CLEARANCE TO BE 1/4; PROVIDING A MIN FASTENER EDGE DISTANCE IS HELD TO 1 1/2 FASTENER DIA.

RELEASED BY LIAISON

5

DETAIL SPEC REQ		CL II ENGRG CHG		CL I ENGRG CHG	

REASON FOR EO	DESCRIPTION OF EO	GAEC EO RELEASE
TO MAINTAIN PROPER FIT ON INSTL FOR METOR. SHLDS	ADDED NOTE*.	(4) VE

MODEL	EFFECTIVITY PROCURING ACTIVITY NO.	GAEC UNIT NO.	SUB CONTR UNIT NO.	DRAWING CHANGE REQD REVISE DWG	RECORD EO	DISPOSITION OF PARTS REWORK	SCRAP
LM		LM1 (31) THRU		✓		✓	
LM		LM-6 (36)					

APPROVED BY	WT			—	a.g.	CR	RMC(E)	
DATE	1/23/67			—		1-23-67	1-27-67	1/23/67
1	YDI	SUPPORT	RELIAB. GROUP	GROUP LEADER	STRESS GROUP	LIAISON ENGRG	PROJ ENGRG	~~GOVT~~

PRIORITY	DRAWING TITLE	DRAWING NO.	EO NO.
C	SHLD INSTL D/S - QUAD II - SE&B, PROTECTION	LDW280-51818	A2

ISSUED BY Don Ragas X6510 SECTION VDI GROUP NO. 335 PL 5

01 NAS 9-1100

GRUMMAN AIRCRAFT ENGINEERING CORP.
CODE IDENT NO. 26512
ENGINEERING ORDER

DWG. NO. LE0280
EO NO. 476
CONTROL INFO NO. LDW280 # 5542

TO THE FOLLOWING DRAWINGS LISTED BELOW AND THEIR DASH NUMBERS * THAT ARE EFFECTIVE ON LEM-6(36) ADD EFFECTIVITIES FOR LEM-7(37), LEM-8(38), LEM-9(39), LEM-10(40), LEM-11(41), LEM-12(42), LEM-13(43), LEM-14(44) AND LEM-15(45). QUANTITIES AND NEXT ASSEMBLIES REMAIN SAME AS LEM-6(36)

DRAWING NUMBER	CHANGE NUMBER	TITLE
LDW280 - 25703 ✓	A6	SEE DRAWING
-25704 ✓	B1	
-25706 ✓	B1	
-25707 ✓	B4	
-25708 ✓	B6	
-28647 ✓	C1	
-28652 ✓	B8	
-28669 ✓	A3	
-28672 ✓	C1	
-28721 ✓	A2	
-28727 ✓	B2	
-28752 ✓	B3	
-28761 ✓	A4	
-28762 ✓	A1	
-28771 ✓	B5	
-28774 ✓	A8	
-28776 ✓	A1	
-28778 ✓	A1	
-28779 ✓	A4	
-28803 ✓	A3	
-28816 ✓	A2	
-28819 ✓	A2	
-51560 ✓	C1	
-51818 ✓	A3	
-51823	A1	
-52723	A5	
LDW280		SEE DRAWING

* USE APPLICABLE DASH NUMBERS IN DESCRIPTION OF E.O.

THIS IS AN ORIGINAL EO

2

DETAIL SPEC REQ ☐ CL II ENGRG CHG ☐ CL I ENGRG CHG ☐

REASON FOR EO: ADDITIONAL REQUIREMENTS

DESCRIPTION OF EO: FOR DASH * ADDED LEM-7 THRU LEM-15 EFF.

GAEC EO RELEASE: FR 2/23/67

MODEL	PROCURING ACTIVITY NO.	GAEC UNIT NO.	SUB CONTR UNIT NO.
LEM		LEM-7(37) LEM-8(38)	LEM-9(39)
LEM		LEM-10(40) LEM-11(41)	LEM-12(42)
LEM		LEM-13(43) LEM-14(44)	LEM-15(45)

DRAWING CHANGE REQD: REVISE DWG ✓ RECORD EO
DISPOSITION OF PARTS: NOT REQ'D (REWORK / SCRAP)
APPROVED BY / DATE: 0; V.D.I. 2/16/67; STRESS GROUP W/H 2/15/67; PROJ ENGRG RAM 2-16-67; GOVT 2-17-67
PRIORITY: C
DRAWING TITLE: NOTED
DRAWING NO.: LE0280
EO NO.: 476

ISSUED BY M. GREY / J. STRAKOSCH X-1453 SECTION VEHICLE DESIGN INT. GROUP NO. 280 PL. 35

01 NAS 9-1100

B

ENG 32.1 REV 3-66

GRUMMAN AIRCRAFT ENGINEERING CORP.
CODE IDENT NO. 26512
ENGINEERING ORDER EMF-A*

DWG. NO. LDW280 51818
EO NO. A4
CONTROL INFO NO. LM5-13196

ADD THE FOLLOWING NOTE*(USE NEXT AVAILABLE NO)

* ON -1 INSTL - LDW280-18119-11 FLANGES MAY RIDE RIVET HEADS & ELECTRICAL CLIPS AND #X1156 TAPE SHALL BE APPLIED TO BOTH SIDES OF SHIELD.

RELEASED BY LIAISON

DETAIL SPEC REQ ☐ CL II ENGRG CHG ☑ CL I ENGRG CHG ☐

REASON FOR EO: TO ELIMINATE INTERFER. WITH EXISTING STRUCT.

DESCRIPTION OF EO: ADDED NOTE *.

GAEC EO RELEASE: JK 31 5 C

MODEL	PROCURING ACTIVITY NO.	GAEC UNIT NO.	SUB CONTR UNIT NO.
LM		LM1 (31) THRU 15 (45)	

DRAWING CHANGE REQD: REVISE DWG ✓ RECORD EO ☐

DISPOSITION OF PARTS: REWORK ✓ SCRAP ☐

APPROVED BY	WT			~	JF	CH	RHC (W)	
DATE	4/17/67			~	4-17-67	4-17	4-20-67	4-17-67
1	VDI	SUPPORT	RELIAB. GROUP	GROUP LEADER	STRESS GROUP	LIAISON ENGRG	PROJ ENGRG	~~GOVT~~

PRIORITY: C

DRAWING TITLE: SHLD ASSY D/S - MET. PROTECT, LOWER

DRAWING NO.: LDW280-51818

EO NO.: A4

ISSUED BY DON RAGAS X6510 SECTION VDI GROUP NO. 335 PL 5

01

NAS 9-1100

B

ENG 32.1 REV 3-65

GRUMMAN AIRCRAFT ENGINEERING CORP.
CODE IDENT NO. 26512
ENGINEERING ORDER EMP A

DWG. NO. LDW 280-51818		EO NO. A5
CONTROL INFO NO. LM-5-12816		

THIS E.O. IS A REVISION OF E.O. A4

* ON -1 INSTL LDW 280-18119-11 FLANGES MAY RIDE RIVET HEADS & ELECTRICAL CLIPS & *X 1156 TAPE SHALL BE APPLIED TO BOTH SIDES OF SHIELD

S/B

* ON-1 INSTL LDW 280-18119-11 FLANGES MAY RIDE RIVET HEADS & ELECTRICAL CLIPS & *X 1156 TAPE SHALL BE APPLIED TO BOTH SIDES OF SHIELD TO SEAL GAPS. (MAX

RELEASED BY LIAISON

3

DETAIL SPEC REQ	☐	CL II ENGRG CHG	☑	CL I ENGRG CHG	☐	

REASON FOR EO	DESCRIPTION OF EO	GAEC EO RELEASE
TO SEAL GAPS (LM-1 SHAKEDOWN INSPECTION CRAB # N000819)	REF EO A4 ADDED TO END OF NOTE * "TO SEAL GAPS (MAX 3/8)"	JK C

MODEL	PROCURING ACTIVITY NO.	GAEC UNIT NO.	SUB CONTR UNIT NO.
LM		LM-1 (31)	
		THRU	
		LM-15 (45)	

DRAWING CHANGE REQD: REVISE DWG	RECORD EO	DISPOSITION OF PARTS: REWORK	SCRAP									
✓		✓		APPROVED BY	JAP				DV	DV	RMC (EW)	
				DATE	7/6/67				4/18	4/18	4-20-67	4-18-67
				1	JET	SUPPORT	RELIAB. GROUP	GROUP LEADER	STRESS GROUP	LIAISON ENGRG	PROJ ENGRG	GOVT

PRIORITY	DRAWING TITLE	DRAWING NO.	EO NO.
C	SHIELD ASSY D/S MET. PROTECT - LOWER	LDW 280-51818	A5

ISSUED BY LIAISON A. VENTO X-6216 SECTION VDI GROUP NO. 335 PL 5

01 NAS 9-1100

ENG 32.2 REV 3-65

GRUMMAN AIRCRAFT ENGINEERING CORP.
CODE IDENT NO. 26512
ENGINEERING ORDER

DWG. NO. LEO 280
EO NO. 1170
CONTROL INFO NO. LDW 280B5397

REVISE THE NEXT ASSEMBLY FOR THE FOLLOWING PARTS EFFECTIVE LM-6(36) THRU LM-15(45)

DRAWING NO.	DASH* NO.	**NEW NEXT ASSY	***EXISTING NEXT ASSY	CHANGE NO	DWG TITLE
LDW 280-28816	-17	LDW 280-56553	LDW 280-54553	A7	SEE DWG.
LDW 280-52635	-5	LDW 280-56553	LDW 280-54553	C4	
LDW 280-28835	-9	LDW 280-56553	LDW 280-54553	C1	
LDW 280-51642	-5	LDW 280-56553	LDW 280-54553	B1	
LDW 280-51818	-1	LDW 280-56553	LDW 280-54553	A6	
LDW 280-53505	-1	LDW 280-56553	LDW 280-54553	A2	
LDW 280-53501	-21	LDW 280-56553	LDW 280-54553	G2	
LDW 280-53504	-3	LDW 280-56553	LDW 280-54553	B4	SEE DWG

01
NAS 9-1100

SWIP

DETAIL SPEC REQ ☐ CL II ENGRG CHG ☐ CL I ENGRG CHG ✓ LCD 3179 ECP A-062-R PK 9 (5)

REASON FOR EO: REDUCTION OF THERMAL SHIELDING DUE TO REVISION OF PLUME HEATING RATES

DESCRIPTION OF EO: FOR * NEXT ASSY ** WAS ***

GAEC C RO RELEASE: 10/

MODEL	PROCURING ACTIVITY NO.	GAEC UNIT NO.	SUB CONTR UNIT NO.
LM		LM6(36) THRU LM15(45)	

DRAWING CHANGE REQD: ✓ REVISE DWG; RECORD EO
DISPOSITION OF PARTS: NOT REQ; REWORK; SCRAP

APPROVED BY	Jos	D.R		P.T	WH		Jaf
DATE	10/17/68	10/17/68		10/16/68	10/16/68		10/17/68
	VDI	~~SUPPORT~~ THEM	RELIAB. GROUP	GROUP LEADER	STRESS GROUP	LIAISON ENGRG	PROJ ENGRG

PRIORITY: C
DRAWING TITLE: SEE DRAWING
DRAWING NO.: LEO 280
EO NO.: 1170

11/1/68 F.L.
ISSUED BY ED MORRIS EXT 86046 SECTION V.D.1. GROUP NO. 335 PL 25

ENG 32.2 REV 3-65

GRUMMAN AIRCRAFT ENGINEERING CORP.
CODE IDENT NO. 26512
ENGINEERING ORDER

DWG. NO. LEO 280
EO NO. 1292
CONTROL INFO NO. LDW280B7082

IN M/B FOR DASH NUMBERS LISTED BELOW, CHANGE N/A AS NOTED. QUANTITY REMAINS THE SAME
EFF LM-8(38) THRU LM-15(45).

DRAWING NO.	DASH NO.	N/A WAS	N/A IS	CHG LETTER
LDW280-28583	-53	LDW280-56553	LDW280-58553	C3
-28816	-17			B1
-28835	-9			C3
-51560	-7-1			C7
-51642	-5-1			B3
-51818	-1			A7
-52635	-5			C6
-52822	-13			A9
-53501	-21			G4
-53504	-3			B6
-53505	-1			A3
-53512	-1			B1
-53513	-5			B1
-53514	-410-65			D1
-53644	-23			A6
-53646	-31			B2
-53649	-21			A7
-54506	-1			A2
-54568	-5			A3
-54600	-1-1			A4
-56671	-1			A1
-56731	-10-3			A3
-66510	-3			B4
LDW280-66661	-3	LDW280-56553	LDW280-58553	A5

DETAIL SPEC REQ ☐ CL II ENGRG CHG ☐ CL I ENGRG CHG ✓ LCD 3179 CCA1278 PKG 50 ECP A062 (5)

REASON FOR EO: CHANGE 1/2 MIL H FILM TO 1/4 MIL H FILM

DESCRIPTION OF EO: SEE ABOVE

GAEC EO RELEASE: 2/27/69

MODEL	PROCURING ACTIVITY NO.	GAEC UNIT NO.	SUB CONTR UNIT NO.
LM		LM-8(38)	
		THRU	
		LM-15(45)	

DRAWING CHANGE REQD: ✓ REVISE DWG / RECORD EO
DISPOSITION OF PARTS: NOT REQ'D — REWORK / SCRAP

APPROVED BY		MMR					
DATE	2/13/69	2/17/6		2/12/69	2/18/69		2/17/69
	VDI	THER. SUPPORT	RELIAB. GROUP	GROUP LEADER	STRESS GROUP	LIAISON ENGRG	PROJ ENGRG

2/27/69

PRIORITY: C
DRAWING TITLE: SEE DWG.
DRAWING NO.: LEO 280
EO NO.: 1292

6DR022469
ISSUED BY W KAY x87222/D.SHAPIRO x87222 SECTION V.D.I. GROUP NO. 335 PL 25

01
NAS 9-1100

ENG 32.1 REV 3-65

GRUMMAN AIRCRAFT ENGINEERING CORP.
CODE IDENT NO. 26512
ENGINEERING ORDER

DWG. NO. LEO 280
EO NO. 1444
CONTROL INFO NO. LDW280B7453

FOR THE DWGS LISTED BELOW DELETE LM-15(45) EFF FROM ALL DASH NOS. *

DWG NO.	CHANGE NO.	DWG NOMENCLATURE
LDW280-51642	B4	SEE DWG
-51818	B1	
-51823	A3	
-52571	A3	
-52574	B3	
LDW280 -52627	B6	SEE DWG

* APPLICABLE DASH NOS

DETAIL SPEC REQ ☐ CL II ENGRG CHG ☐ CL I ENGRG CHG ☑ LCD3587 PKG 56 PG 1 CCA 1821 (5)

REASON FOR EO: LM-15(45) NO LONGER REQD

DESCRIPTION OF EO: DELETED LM-15(45) EFF FROM -*

GAEC EO RELEASE: VC 5/7/69

MODEL	EFFECTIVITY: PROCURING ACTIVITY NO.	GAEC UNIT NO.	SUB CONTR UNIT NO.
LM		LM-15(45)	

DRAWING CHANGE REQD: REVISE DWG ✓ RECORD EO
DISPOSITION OF PARTS: REWORK SCRAP ✓

	VDI	SUPPORT	RELIAB GROUP	GROUP LEADER	STRESS GROUP	LIAISON ENGRG	PROJ ENGRG	GOVT
APPROVED BY								
DATE	4/8/69			4-2-69	4/8/69		4/9/69	5/7/69

PRIORITY: C
DRAWING TITLE: SEE DWG
DRAWING NO.: LEO 280
EO NO.: 1444

052869 ISSUED BY MEVORAH / THORJUSEN X86046 SECTION VEH DES INT GROUP NO. 335 PL 25

01

NAS 9-1100

ENG 32.1 REV 3-65

GRUMMAN AIRCRAFT ENGINEERING CORP.
CODE IDENT NO. 26512
ENGINEERING ORDER

DWG. NO. LEO280		EO NO. 1732
CONTROL INFO NO. LDW280B9166		

FOR THE DRAWINGS LISTED BELOW, REMOVE LM-10(40) THRU LM-14(44) EFF. FROM ALL DASH NOS. *

DRAWING NUMBER *	NEXT ASSEMBLY	DWG. TITLE	CHG. LTR
LDW280-51642-5-1	LDW280-58553	SEE DWG	B5
-18140-11,-21,-23,-25,-27&-29	-51642		B3
-18201-15&-17&-19	-51642		B6
-18206-15,-17,-19&-21	-51642		B6
-51818-1	-58553		B2
-18119-11,-13,-15,-17&-19	-51818		A6
-28835-9	-58553		C5
-18190-13	-28835		D3
-54643-1	-28835		A2
LDW280-54832-1	LDW280-28835	SEE DWG	A2

* APPLICABLE DASH NO.

DETAIL SPEC REQ	☐	CL II ENGRG CHG	☐	CL I ENGRG CHG	☑	LCD 3890 PKG 59 CCA 2205 (5)

REASON FOR EO: LMMP REDESIGN. 3 TANK EXPANSION

DESCRIPTION OF EO: REMOVED LM-10(40) THRU LM-14(44) EFF. FROM - *

GAEC EO RELEASE: JK 10/23/69

MODEL	PROCURING ACTIVITY NO.	GAEC UNIT NO.	SUB CONTR UNIT NO.
LM		LM-10(40)	
		THRU	
		LM-14(44)	

DRAWING CHANGE REQD: REVISE DWG	RECORD EO	DISPOSITION OF PARTS: REWORK	SCRAP
✓			✓

	VDI	SUPPORT	RELIAB. GROUP	GROUP LEADER	STRESS GROUP	LIAISON ENGRG	PROJ ENGRG	
APPROVED BY	RP							
DATE	—			10-20-69	10/21/69		10/20/69	10/22/69

PRIORITY	DRAWING TITLE	DRAWING NO.	EO NO.
C	SEE ABOVE	LEO 280	1732

CDR 10-24

ISSUED BY D.SHAPIRO/P.THORJUSEN X86046 SECTION VDI GROUP NO. 335 PL 25

01

NAS 9-1100

LDW280-51823

MODEL OR END ITEM	NEXT ASSY	MODULE OR SER NO.	REQD PER MODULE OR END ITEM
LM	LDW280-54508	LM 6(36)	4 EA
	LDW280-54508	LM 5(35)	4 EA
	LDW280-54508	LM 4(34)	4 EA
	LDW280-53508	LM 3(33)	4 EA
LM	LDW280-52508	LM2(32)	4 EA
PART NO. LDW280-51823-3 & -4		GAEC SCH NO.	

MODEL OR END ITEM	NEXT ASSY	MODULE OR SER NO.	REQD PER MODULE OR END ITEM
LM	LDW280-51508	LM1(31)	4 EA
PART NO. LDW280-51823 -1 & -2		GAEC SCH NO. 501	

MODEL OR END ITEM	NEXT ASSY	MODULE OR SER NO.	REQD PER MODULE OR END ITEM
PART NO.		GAEC SCH NO.	

2

SH REV STATUS: FOR DESCRIPTION OF REV SEE SUBQ SH

SHEET	100		200	300							
REV											
SHEET											
REV											
SHEET											
REV											

LAST SECT LTR USED J

LAST DASH NO. USED -4

GRUMMAN REL INFO

PRIM NO. LE(001)

220 MP-10-4-6

UNLESS OTHERWISE SPECIFIED DIMENSIONS ARE IN INCHES.
TOLERANCE UNLESS SPECIFIED
FRACTIONS - DECIMALS - ANGLES
±1/16 ±.020 ±1/2

ORIG DWG AUTH
DETAIL SPEC REQUIREMENT
CLASS II ENGRG CHANGE
CLASS I ENGRG CHANGE

CONTRACT NO. NAS-9-1100
LINE ITEM #1
DOCUMENTATION TYPE II

DRAWN BY Zuna 9/18/66
LAYOUT BY Zuna 9/18/66
CHECKED BY
GR LEADER 9/19/66
VEH DESIGN 9/20
STRUCTURE 9/26
STRUCTURE Hildeman 9/2
WEIGHTS
RELIABILITY
PROJ ENGR (WR) 10-3
REL GROUP 10-13-66

GRUMMAN AIRCRAFT ENGRG CORP
BETHPAGE, L. I., NEW YORK

SHIELD INSTAL - DES. STAGE
METEOROID PROTECTION
LOWER DECK

SIZE B
CODE IDENT NO. 26512
LDW280-51823
SCALE NONE
SHEET 1 OF 3

ENG 77.1 12-65

CDR 9/16/66

01 NAS 9-1100

					✓	✓		GT835P-8	E	TAPE (SEE NOTE 3)							
			1					LDW280-18118-14	E	SHIELD							
				1				LDW280-18118-13	|	SHIELD							
					1			LDW280-18118-12	|	SHIELD							
						1		LDW280-18118-11	|	SHIELD							
								LDW280-51823-3	|	SHIELD INSTAL							
								LDW280-51823-1	E	SHIELD INSTAL							
			-4	-3	-2	-1	CODE IDENT	PART NO.	I&T	NOMENCLATURE OR DESCRIPTION	MATERIAL	GOVT SPEC	COML SPEC	STOCK SIZE	PROCESS SYM	FINISH NO.	ZONE
QTY PER ASSEMBLY																	

SYM OR NO.	PROCESS OR FINISH	GRUMMAN SPEC OR MILITARY SPEC	SYM OR NO.	PROCESS OR FINISH	GRUMMAN SPEC OR MILITARY SPEC	SYM OR NO.	PROCESS OR FINISH	GRUMMAN SPEC OR MILITARY SPEC

I & T: IDENTIFICATION AND TRACEABILITY IN ACCORDANCE WITH : NONE

GRUMMAN AIRCRAFT ENGRG CORP, BETHPAGE, L. I., NEW YORK

SIZE	CODE IDENT NO.	
B	26512	LDW280-51823

SCALE NONE SHEET 2

ENG 77.2 7-65

01

NAS 9-1100

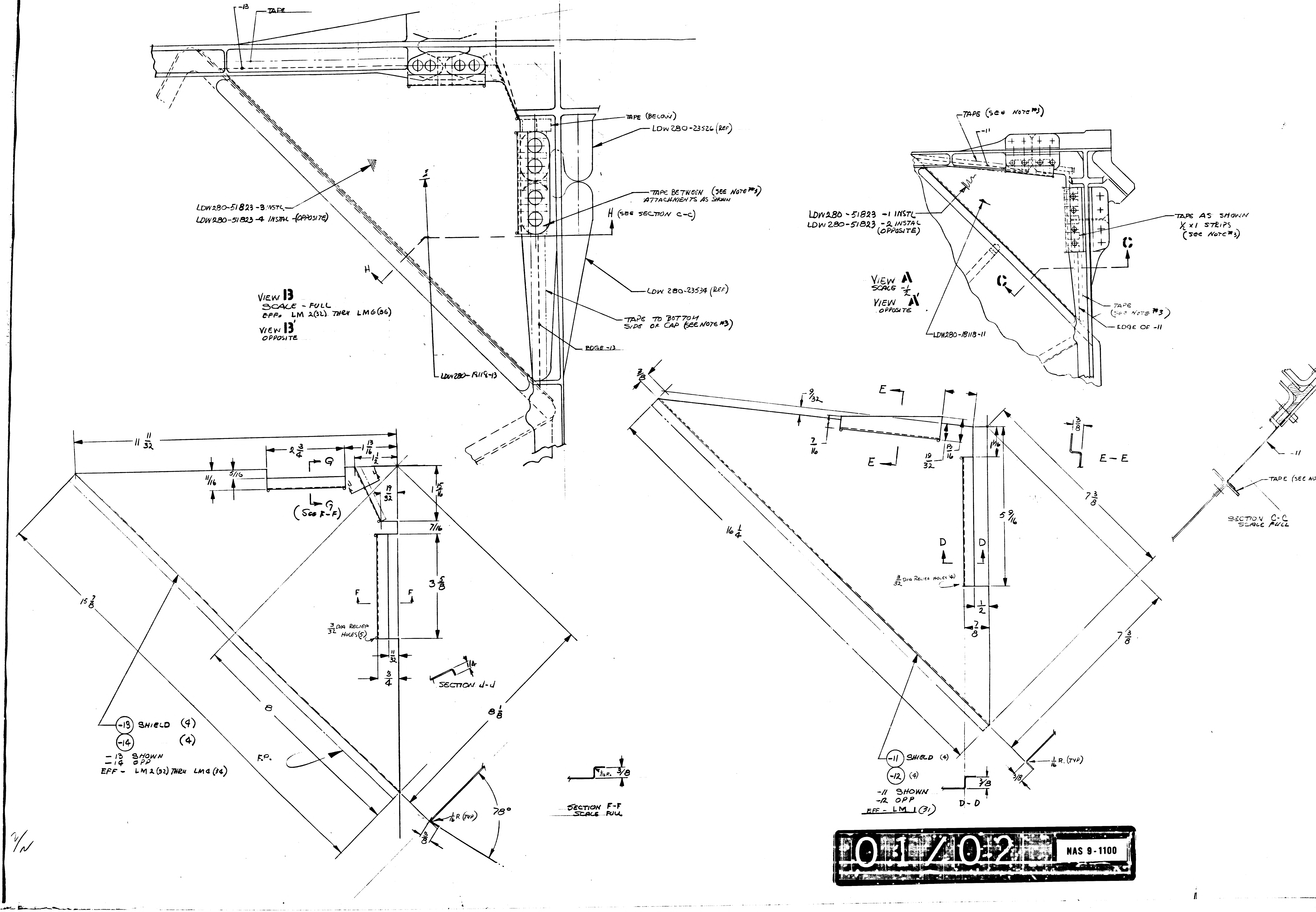
-13
TAPE
TAPE (BELOW)
LDW280-23526 (REF)
TAPE BETWEEN (SEE NOTE #3) ATTACHMENTS AS SHOWN
H (SEE SECTION C-C)
LDW280-51823-3 INSTL
LDW280-51823-4 INSTAL (OPPOSITE)
H
LDW 280-23534 (REF)
TAPE TO BOTTOM SIDE OF CAP (SEE NOTE #3)
VIEW B
SCALE - FULL
EFF. LM 2(32) THRU LM6(36)
VIEW B'
OPPOSITE
EDGE -13
LDW280-R118-13
TAPE (SEE NOTE #3)
-11
LDW280-51823 -1 INSTL
LDW280-51823 -2 INSTAL (OPPOSITE)
TAPE AS SHOWN ½ x 1 STRIPS (SEE NOTE #3)
C
VIEW A
SCALE ½
VIEW A'
OPPOSITE
C
TAPE (SEE NOTE #3)
EDGE OF -11
LDW280-18118-11
-11
TAPE (SEE NO
SECTION C-C
SCALE FULL
11 11/32
2 3/4
1 13/16
1/2
G
11/16
5/16
G
(SEE F-F)
19/32
1 15/16
7/16
3 5/8
F
F
3/32 DIA RELIEF HOLES (5)
11/32
3/4
SECTION J-J
1/4
15 7/8
8
8 1/8
F.P.
1/16 R (TYP)
78°
3/8
-13 SHIELD (4)
-14 (4)
-13 SHOWN
-14 OPP
EFF - LM 2 (32) THRU LM 4 (34)
1/16 R.
3/8
SECTION F-F
SCALE FULL
3/8
9/32
E
7/16
E
19/32
13/16
1 1/16
3/8
E - E
16 1/4
7 3/8
5 9/16
D
D
3/32 DIA RELIEF HOLES (4)
1/2
7/8
7 3/8
-11 SHIELD (4)
-12 (4)
-11 SHOWN
-12 OPP
EFF - LM 1 (31)
3/8
D - D
3/16
1/16 R. (TYP)
2/N

01/02

NAS 9-1100

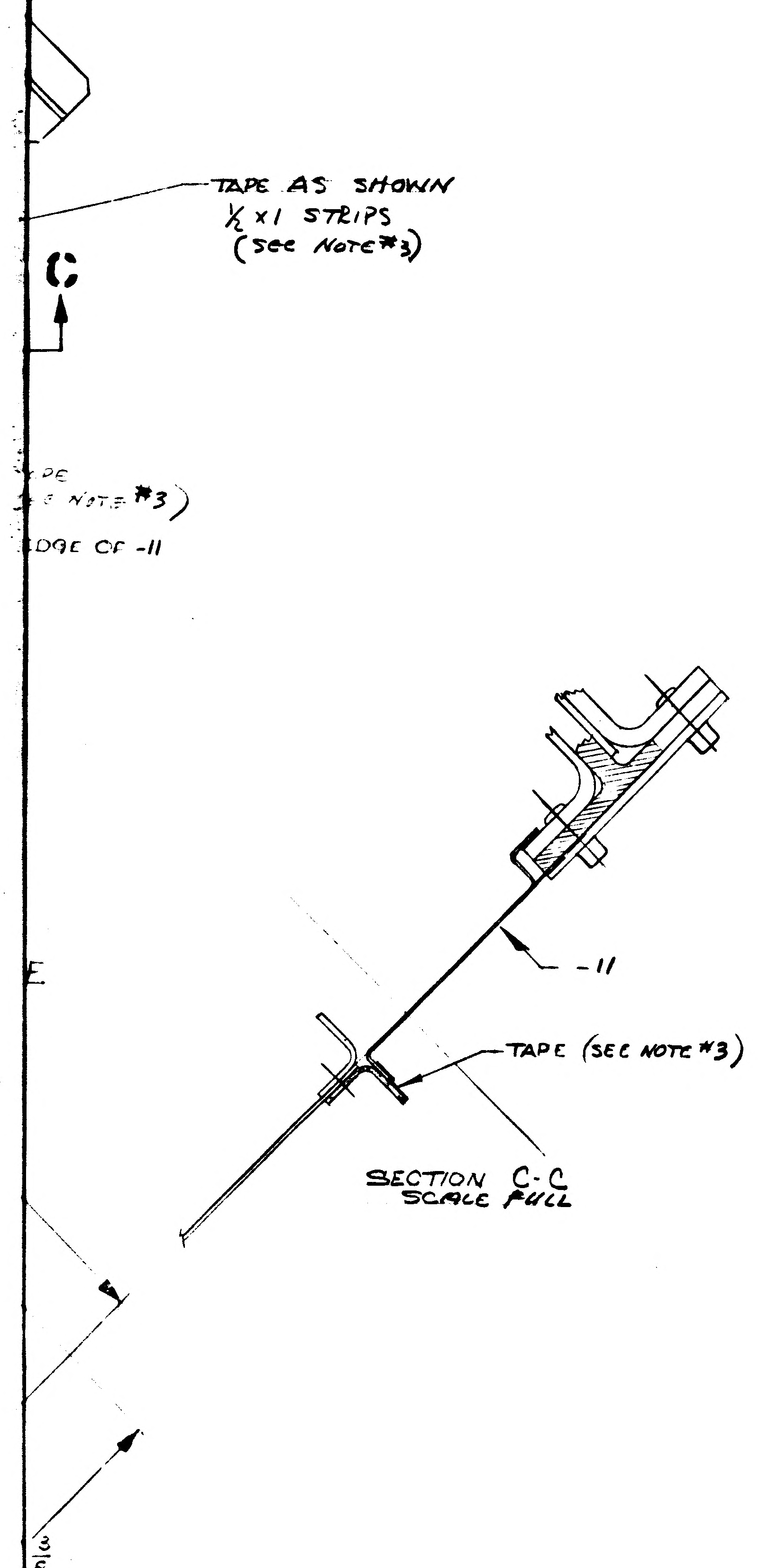

SECTION C-C
SCALE FULL

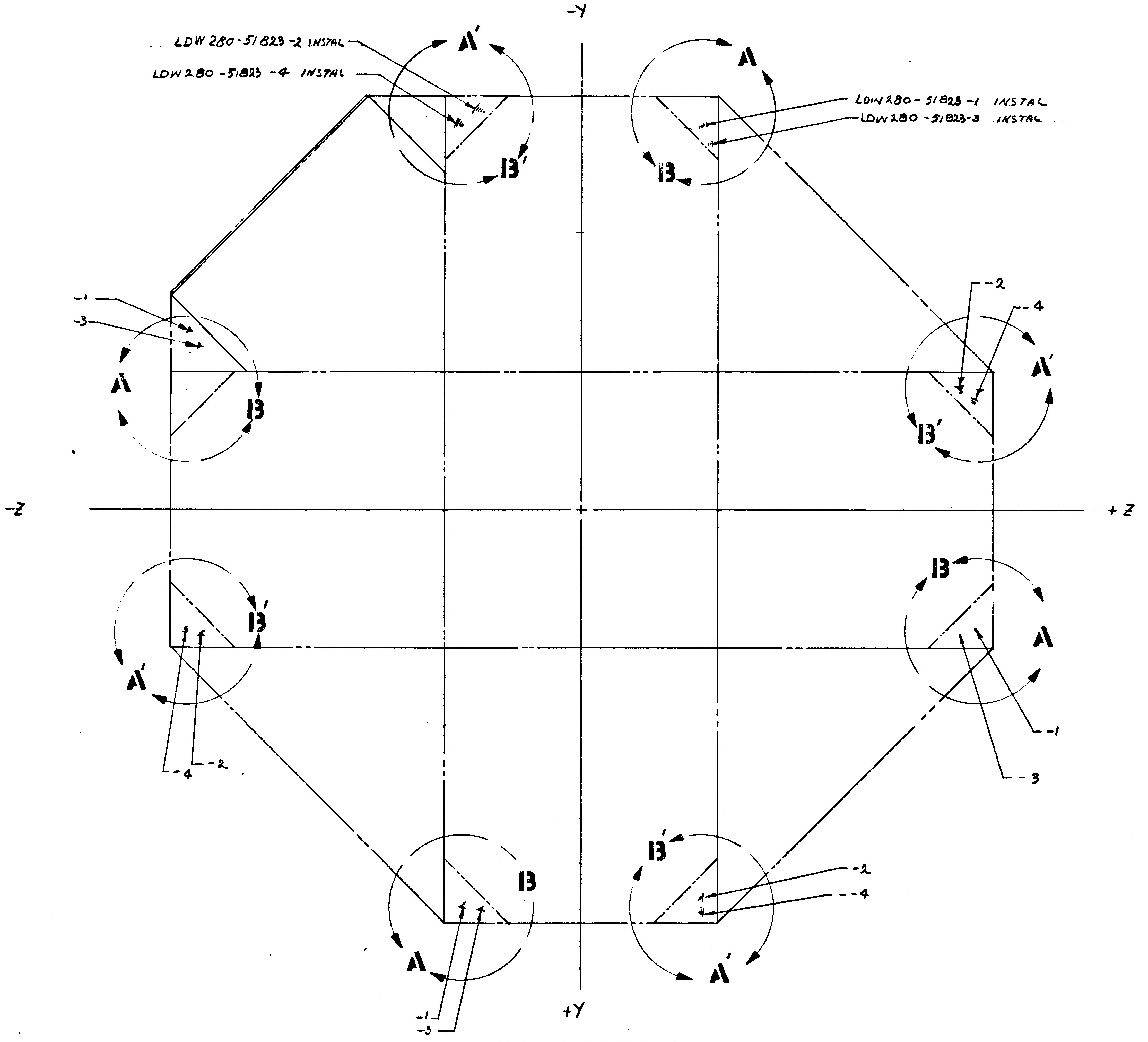

VIEW LOOKING DOWN
LOWER DECK
SCALE - NONE

NOTES:

1. LAYOUT RELEASE - MAY BE REDRAWN ON PRODUCTION FORMAT.
2. ALL INFO. NOT REQ'D FOR LDW 280-51823-1 & -3
3. POLYIMIDE PRESSURE SENSITIVE TAPE, 1 INCH WIDE. GT 835 P-8 (OR EQUIV)

MANUFACTURING OPERATIONS UNLESS OTHERWISE SPECIFIED NOTES CHECKED √ APPLY TO THIS DWG.	
PART NUMBER AND ALL OTHER MARKINGS IN REGION MARKED ☒ USE BOTH SIDES IF NECESSARY.	
FILLET AND INSIDE CORNER RADII TOLERANCES .016R TO .062R ± .010 .063R TO .250R ± .015 OVER .250R ± .030	
DEPTH SHOWN FOR TAPPED HOLES IS FULL THDS. 2-3 IMP THDS. BEYOND PERMISSIBLE.	
EXTERNAL THREAD LENGTH SHOWN INCLUDES 2 IMPERFECT THREADS MAX.	
DO NOT CADMIUM PLATE & PAINT HOLES OR SURFACES MARKED WITH DOUBLE ASTERISK.	
MISMATCH STEP OF ± .005 PERMISSIBLE DUE TO CHANGE OF CUTTERS AT INSIDE INTERSECTING SURFACES.	
DIAMETERS MARKED MUST BE CONCENTRIC WITHIN FULL INDICATOR READING	
HOLES MUST BE KEPT FREE OF CHROME PLATING SOLUTION.	
ALL DIMENSIONS SHOWN TO BE MET AFTER CADMIUM PLATING. THICKNESS OF PLATE .0003 MIN. TO .0005 MAX. MIN. THICKNESS TO BE .0002 ON THREADED AREAS. NO ALLOWANCE FOR PLATING IN HOLES	
$\overline{125}\surd$ SURFACE ROUGHNESS INCLUDING REAMED HOLES PER MIL-STD-10	
$\overline{200}\surd$ FOR ALL DRILLED HOLES	
REMOVE ALL BURRS. BREAK ALL EDGES .015-.031	
INSPECTION INFORMATION MINIMUM PERMISSIBLE AVERAGE EDGE DISTANCE MARKED IS	
SYMBOL $\surd$ DENOTES SURFACE TO BE MACHINED	
UNLESS OTHERWISE SPECIFIED TOLERANCE ON FLANGES IS ± 1/32	
LENGTHS OF AN, NAS & MS ALLOY RIVETS SHORTER THAN 1 INCH ARE NOT SPECIFIED.	
TOLERANCE ON LOFTED DELINEATIONS IS	

DWG SIZE 34 X

PRINTING INFO ONLY
FULL SIZE SHEET AREA (36 X) = SQ. FT.
1/2 SIZE SHEET AREA (1/4 OF FULL) = SQ. FT.

PRINT TRIM LINE

LDW280-51823

LDW280-51823

02702

NAS 9-1100

	GRUMMAN AIRCRAFT ENGRG CORP., BETHPAGE, L. I., NEW YORK		
	SIZE J	CODE IDENT NO. 26512	LDW280-51823
MODEL OR END ITEM	SCALE NOTED		SHEET 3

GRUMMAN AIRCRAFT ENGINEERING CORP.
CODE IDENT NO. 26512
ENGINEERING ORDER LMP 4

DWG NO. LEQ280
EO NO. 476
CONTROL INFO NO. LDW280 # 5542

ENG 323 REV 3-65

*TO THE FOLLOWING DRAWINGS LISTED BELOW AND THEIR DASH NUMBERS THAT ARE EFFECTIVE ON LEM-6(36), ADD EFFECTIVITIES FOR LEM-7(37), LEM-8(38), LEM-9(39), LEM-10(40), LEM-11(41), LEM-12(42), LEM-13(43), LEM-14(44) AND LEM-15(45). QUANTITIES AND NEXT ASSEMBLIES REMAIN SAME AS LEM-6(36)

DRAWING NUMBER	CHANGE NUMBER	TITLE
LDW280 - 25703 ✓	A6	SEE DRAWING
-25704 ✓	B1	
-25706 ✓	B1	
-25707 ✓	B4	
-25708 ✓	B6	
-28647 ✓	C1	
-28652 ✓	B8	
-28669 ✓	A3	
-28672 ✓	C1	
-28721 ✓	A2	
-28727 ✓	B2	
-28752 ✓	B3	
-28761 ✓	A4	
-28762 ✓	A1	
-28771 ✓	B5	
-28774 ✓	A8	
-28776 ✓	A1	
-28778 ✓	A1	
-28779 ✓	A4	
-28803 ✓	A3	
-28816 ✓	A2	
-28819 ✓	A2	
-51560 ✓	C1	
-51818 ✓	A3	
-51823 ✓	A1	
-52723	A5	
LDW280		SEE DRAWING

*USE APPLICABLE DASH NUMBERS IN DESCRIPTION OF E.O.

THIS IS AN ORIGINAL EO

2

DETAIL SPEC REQ		CL II ENGRG CHG		CL I ENGRG CHG		

REASON FOR EO: ADDITIONAL REQUIREMENTS

DESCRIPTION OF EO: FOR DASH * ADDED LEM-7 THRU LEM-15 EFF.

GAEC EO RELEASE: YR 2/23/7

MODEL	PROCURING ACTIVITY NO.	GAEC UNIT NO.	SUB CONTR UNIT NO.
LEM		LEM-7(37) LEM-8(38) LEM-9(39)	
LEM		LEM-10(40) LEM-11(41) LEM-12(42)	
LEM		LEM-13(43) LEM-14(44) LEM-15(45)	

DRAWING CHANGE REQD: ✓ REVISE DWG | RECORD EO

DISPOSITION OF PARTS: NOT REQ'D (REWORK / SCRAP)

PRIORITY: C

APPROVED BY		SUPPORT	RELIAB. GROUP	GROUP LEADER	STRESS GROUP	LIAISON ENGRG	PROJ ENGRG	GOVT
	WB				WJH		RMS	
DATE	8/1/62				2/15/67		2-16-67	2-17-67
0	V.D.I.							

DRAWING TITLE: NOTED

DRAWING NO. LEQ280

EO NO. 476

ISSUED BY M. GREY / J. STRAKOSCH X1153 SECTION VEHICLE DESIGN INT. GROUP NO. 280 PL 35

01
NAS 9-1100

01

NAS 9-1100

B

ENG 32.2 REV 3-65

GRUMMAN AIRCRAFT ENGINEERING CORP.
CODE IDENT NO. 26512
ENGINEERING ORDER *

DWG. NO. LDW280 -51823	EO NO. A2
CONTROL INFO NO. LM5-11873	

ON-1 &-2 REVISE VIEW A AS SHN:

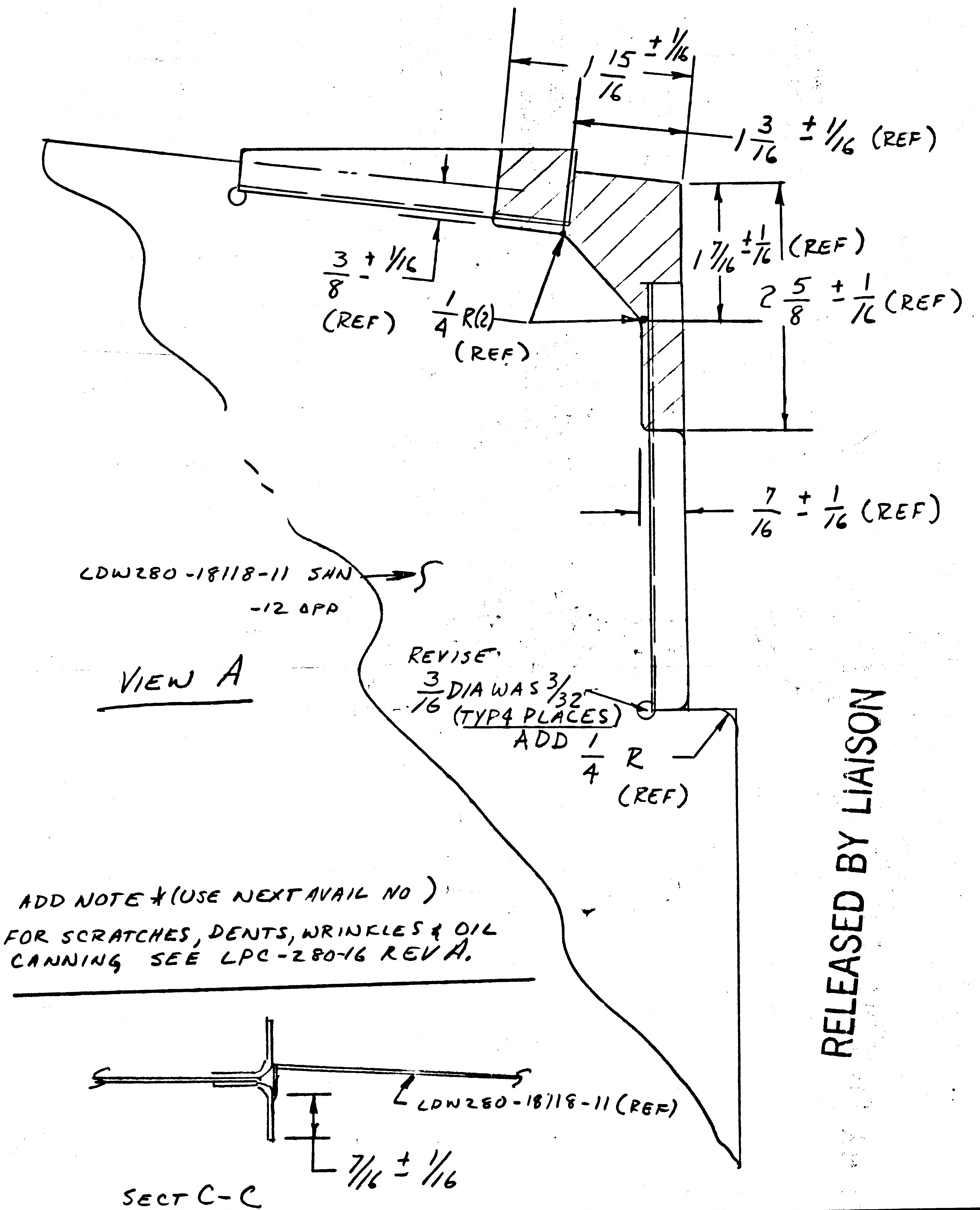
1 15/16 ±1/16
1 3/16 ±1/16 (REF)
1 7/16 ±1/16 (REF)
2 5/8 ±1/16 (REF)
3/8 ±1/16 (REF)
1/4 R(2) (REF)
7/16 ±1/16 (REF)
LDW280-18118-11 SHN
-12 OPP
VIEW A
REVISE 3/16 DIA WAS 3/32 (TYP 4 PLACES)
ADD 1/4 R (REF)
LDW280-18118-11 (REF)
7/16 ±1/16

ADD NOTE * (USE NEXT AVAIL NO)
FOR SCRATCHES, DENTS, WRINKLES & OIL CANNING SEE LPC-280-16 REV A.

SECT C-C

RELEASED BY LIAISON

DETAIL SPEC REQ		CL II ENGRG CHG		CL I ENGRG CHG		5								
REASON FOR EO TO FACILATE INSTL OF DETAIL PART				DESCRIPTION OF EO ON-1 &-2 VIEW A; REVISED PICTURE OF LDW280-18118-11 &-12. ADDED NOTE *. IN SECT C-C ADDED 7/16 ±1/16 DIM.										GAEC C EO RELEASE DK
MODEL	EFFECTIVITY			DRAWING CHANGE REQD		DISPOSITION OF PARTS		APPROVED BY	WT			~		
	PROCURING ACTIVITY NO.	GAEC UNIT NO.	SUB CONTR UNIT NO.	✓		✓		DATE	2/21/67			~	2-22-67	2-21-67	2-24-67	2-22-67
LM		LM 1 (31)		REVISE DWG	RECORD EO	REWORK	SCRAP	1	VD I	SUPPORT	RELIAB. GROUP	GROUP LEADER	STRESS GROUP	LIAISON ENGRG	PROJ ENGRG	~~GOVT~~
LM				PRIORITY C	DRAWING TITLE SHIELD INSTL D/S-METEOROID PROTECTION-LOWER							DRAWING NO. LDW280-51823				EO NO. A2

ISSUED BY DON RAGAS X6570 SECTION VD1 GROUP NO. 335 PL 5

ENG 32.1 REV 3-65

GRUMMAN AIRCRAFT ENGINEERING CORP.
CODE IDENT NO. 26512
ENGINEERING ORDER

DWG. NO. LEO 280
EO NO. 1444
CONTROL INFO NO. LDW280B7453

FOR THE DWGS LISTED BELOW DELETE LM-15(45) EFF FROM ALL DASH NOS. *

DWG NO.	CHANGE NO.	DWG NOMENCLATURE
LDW280-51642	B4	SEE DWG
-51818	B1	
-51823	A3	
-52571	A3	
-52574	B3	
LDW280 -52627	B4	SEE DWG

* APPLICABLE DASH NOS

DETAIL SPEC REQ ☐ CL II ENGRG CHG ☐ CL I ENGRG CHG ☑ LCD3587 PKG 56 PG 1 CCA 1821 (5)

REASON FOR EO: LM-15(45) NO LONGER REQD

DESCRIPTION OF EO: DELETED LM-15(45) EFF FROM -*

GAEC EO RELEASE: JC 5/1/

MODEL	EFFECTIVITY PROCURING ACTIVITY NO.	GAEC UNIT NO.	SUB CONTR UNIT NO.
LM		LM-15(45)	

DRAWING CHANGE REQD: REVISE DWG ✓ RECORD EO
DISPOSITION OF PARTS: REWORK SCRAP ✓

	VDI	SUPPORT	RELIAB. GROUP	GROUP LEADER	STRESS GROUP	LIAISON ENGRG	PROJ ENGRG	GOVT
APPROVED BY								
DATE	4/1/69			4-2-69	4/8/69		4/9/69	5/7/69

PRIORITY: C
DRAWING TITLE: SEE DWG
DRAWING NO.: LEO 280
EO NO.: 1444

052869 ISSUED BY MEVORAH / THORJUSEN X86046 SECTION VEH DES INT GROUP NO. 335 PL 25

01

NAS 9-1100

GRUMMAN AIRCRAFT ENGINEERING CORP.
CODE IDENT NO. 26512

ENG 32.1 REV 3-65

ENGINEERING ORDER

DWG. NO. LEO280
EO NO. 1733
CONTROL INFO NO. LDW280B9167

FOR THE DRAWINGS LISTED BELOW, REMOVE LM-10(40) THRU LM-14(44) EFF. FROM ALL DASH NOS.*
*APPLICABLE DASH NO.

DRAWING NUMBER *	NEXT ASSY	DWG. TITLE	CHG. LTR
LDW280-54838-1	LDW280-28835	SEE DWG	A2
-54839-1	-28835		A2
-18358-11,-13,-15 &-17 -18358-11,-13,-15, &-17 -18358-11,-13,-15 &-17 -18358-11,-13,-15&-17	-54643 -54832 -54838 -54839		A3
-18359-11 &-19 -18359-15 &-19 -18359-17&-19 -18359-13&-19	-54832 -54838 -54839 -54643		A3
-18360-11,-12,&-13 -18360-11,-12 &-19 -18360-11,-12 &-15 -18360-11,-12 &-17	-54643 -54832 -54838 -54839		A3
-18361-13&-15 -18361-11 -18361-13&-15 -18361-17	-54643 -54832 -54838 -54839		A3
-51823-3&-4	-54508		A4
LDW280-18118-13&-14	LDW280-51823	SEE DWG	A6

DETAIL SPEC REQ ☐ CL II ENGRG CHG ☐ CL I ENGRG CHG ☑ LCD 3890 PKG59 CCA2205 (5)

REASON FOR EO: LMMP REDESIGN. 3 TANK EXPANSION

DESCRIPTION OF EO: REMOVED LM-10(40) THRU LM-14(44) EFF. FROM - *

GAEC EO RELEASE: JK 10/23/69

MODEL	PROCURING ACTIVITY NO.	GAEC UNIT NO.	SUB CONTR UNIT NO.
LM		LM-10(40)	
		THRU	
		LM-14(44)	

DRAWING CHANGE REQD: REVISE DWG ✓ RECORD EO
DISPOSITION OF PARTS: REWORK SCRAP ✓

APPROVED BY								
DATE	—			10-20-69	10/21/69		10/22/69	10/22/69
	VDI	SUPPORT	RELIAB. GROUP	GROUP LEADER	STRESS GROUP	LIAISON ENGRG	PROJ ENGRG	

PRIORITY: C
DRAWING TITLE: SEE ABOVE
DRAWING NO.: LEO280
EO NO.: 1733

CDR 10-24

ISSUED BY DSHAPIRO/P.THORJUSEN X86046 SECTION VDI GROUP NO. 335 PL 25

01

NAS 9-1100

LDW280-51824 A

MODEL OR END ITEM	NEXT ASSY	MODULE OR SER NO.	REQD PER MODULE OR END ITEM
LFM420-2370-004			
LDW420-2370	LDW280-51826	SER#1	4 EA
LM	LDW280-51826	LM-2(32	1 EA
LM	LDW280-51826	LM-1(31)	1 EA

PART NO.	GAEC SCH NO.
LDW280-51824-1 & -3	501

(5)

SH REV STATUS: FOR DESCRIPTION OF REV SEE SUBQ SH

SHEET	1.00	1.10
REV	A	A
SHEET	2.00	
REV	A	
SHEET	3.00	
REV	A	

LAST SECT LTR USED A

LAST DASH NO. USED -7

GRUMMAN REF INFO A

PRIM NO. 207 JK(001) AP-1A 9/27/8 EHF

UNLESS OTHERWISE SPECIFIED DIMENSIONS ARE IN INCHES.
TOLERANCE UNLESS SPECIFIED
FRACTIONS - DECIMALS — ANGLES
± 1/16 ±020 ± 1/2°

ORIG DWG AUTH
DETAIL SPEC REQUIREMENT
CLASS II ENGRG CHANGE
CLASS I ENGRG CHANGE

CONTRACT NO. NAS 9-1100
LINE ITEM NO 1
DOCUMENTATION TYPE II

DRAWN BY	F MADDEN	RELIAB.	
LAYOUT BY	F. MADDEN	THERMO	11/5/66
CHECKED BY			
GRP LDR			
VEH. DES			
STRUCT	WJH 11/8/66	PROJ ENGR	RM Carbee 11/8/66
STRUCT		REL GROUP	11/10/66
WEIGHTS			

GRUMMAN AIRCRAFT ENGRG CORP
BETHPAGE, L. I., NEW YORK

SKIN ASSY ~ DESCENT STAGE ~
QUAD II ~ PLUME IMPINGEMENT
VALVE PROTECTION

SIZE	CODE IDENT NO.		
B	26512	LDW280-51824	A

(A)

SCALE NONE SHEET 1.00 OF 4

CDR 10-21-66

ENG 77 1 12-65

01

NAS 9-1100

REVISIONS FOR CONTINUATION OF REVISIONS SEE SHEET ______

CHANGE LTR	ITEM NO.	SHEET NO.	ZONE	GRUMMAN INFO ONLY	DET SPEC	CLASS I	CLASS II	ENGRG ORDER	DESCRIPTION	EFFECTIVITY	DISPOSITION OF EXISTING PARTS		CHANGED BY AND DATE	ENGRG APPD	GOVT APPD
											REWORK	SCRAP			
A	1	1.00 1.10 3.00						LEO280-421	ADDED NOTE 6. ADDED SH. 1.10.	LM-1 THRU LM-15	NOT	REQD	J. HALE 9-11-68		
	2	3.00						EO A2	ADDED SYMBOL FOR LAP DIRECTION, ON -1 & -3.						
	3	2.00 3.00					✓	LEO280-559	FROM B/M & FLD REMOVED LDW280-17970-15(2) & -47(2). REVISED EXISTING NOTE 6 BY ADDING "PARTS TO BE MADE FROM .00125 INCONEL 600 PER AMS 5540E".						
	4	1.00				✓		LEO280-707 LCD 1244	RESTRICTED -1 & -3 FOR USE ON LM-1 & LM-2, WAS USED ON LM-1 THRU LM-15.	LM-3 THRU LM-15		✓			
	5	1.00		LFM420-2370-001		✓		EO A5 LCD 2193	ON -1 & -3 ADDED EFF LDW420-2370 SER#1 (4) REQD EACH.	SER#1	NOT	REQD			
	6	1.00		LFM 420-2370-004		✓		LEO 280-792 LCD 2193	IN MOD BLK FOR -1 & -3 LFM420-2370-004 WAS LFM420-2370-001.	SER#1	NOT	REQD			
	7	1.10		LFM420-2370-004		✓		EO A7 LCD 2193	CANCELLED BY EO A8.	SER#1	NOT	REQD			
	8	1.10		LFM 420-2370-004		✓		LEO 280-830 LCD 2193 ⓐ	CANCELLED EO A7	SER#1		✓	RMS		L.R

CHG APPROVED	LTR	GROUP LDR	VEH. DES	STRUCT	STRUCT	WEIGHTS	RELIAB.	THERMO			
	A										

GRUMMAN AIRCRAFT ENGRG CORP., BETHPAGE, L. I., NEW YORK

SIZE	CODE IDENT NO.		
B	26512	LDW280-51824	A ⓐ
SCALE NONE			SHEET 1.10

ENG 77.16 3-66

01

NAS 9-1100

							CODE IDENT	PART NO.	I&T	NOMENCLATURE OR DESCRIPTION	MATERIAL	GOVT SPEC	COML SPEC	STOCK SIZE	PROCESS SYM	FINISH NO.	ZONE
					1			LDW280-51824-7	E	SKIN ASSY (WELD)	(SEE NOTE 6)				FLW	NONE	
						1		LDW280-51824-5	E	SKIN ASSY (WELD)	(SEE NOTE 6)				FLW	↓	
								LDW280-51824-3	E	SKIN ASSY					FLW	↓	
								LDW280-51824-1	E	SKIN ASSY					FLW	NONE	
					-3	-1											
QTY PER ASSEMBLY																	

SYM OR NO.	PROCESS OR FINISH	GRUMMAN SPEC OR MILITARY SPEC	SYM OR NO.	PROCESS OR FINISH	GRUMMAN SPEC OR MILITARY SPEC	SYM OR NO.	PROCESS OR FINISH	GRUMMAN SPEC OR MILITARY SPEC
						FLW	RESISTANCE	
							WELDING	LSP14-6102

I & T: IDENTIFICATION AND TRACEABILITY IN ACCORDANCE WITH : NONE

GRUMMAN AIRCRAFT ENGRG CORP, BETHPAGE, L. I., NEW YORK

SIZE B | CODE IDENT NO. 26512 | LDW280-51824 | A Ⓐ

SCALE NONE | SHEET 2.00

ENG 77.2 7-65

01

NAS 9-1100

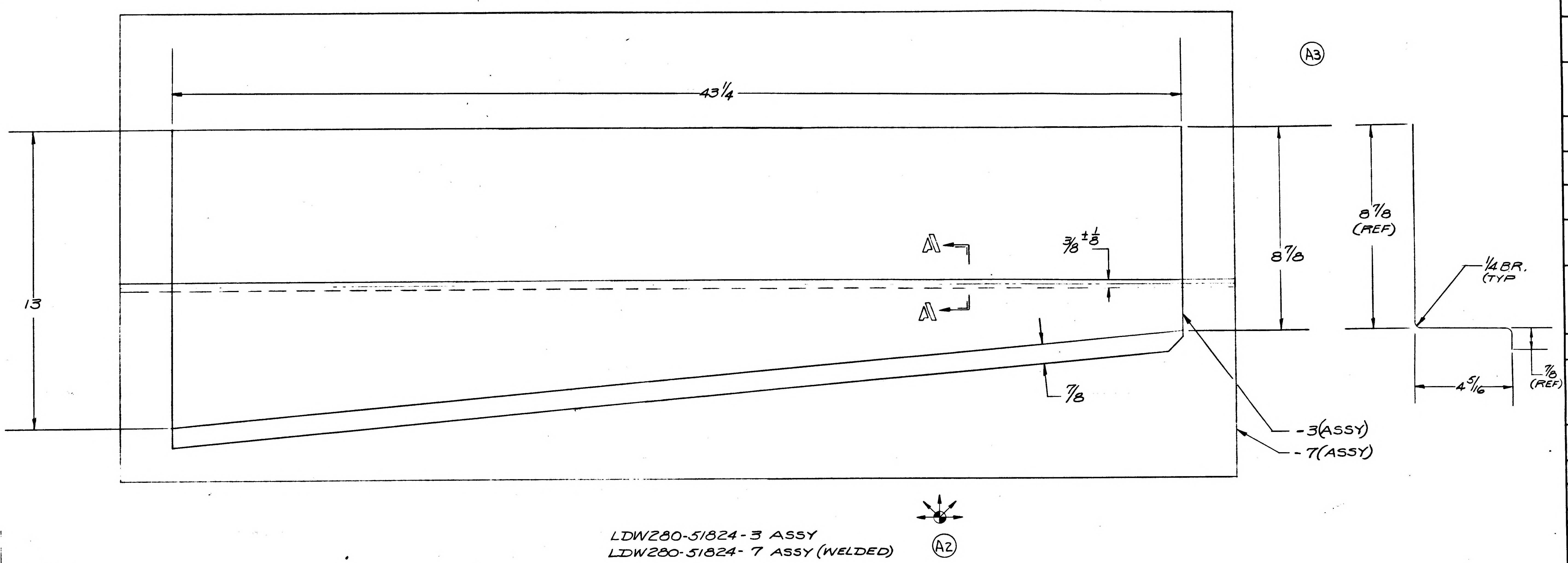

LDW280-51824-3 ASSY
LDW280-51824-7 ASSY (WELDED)

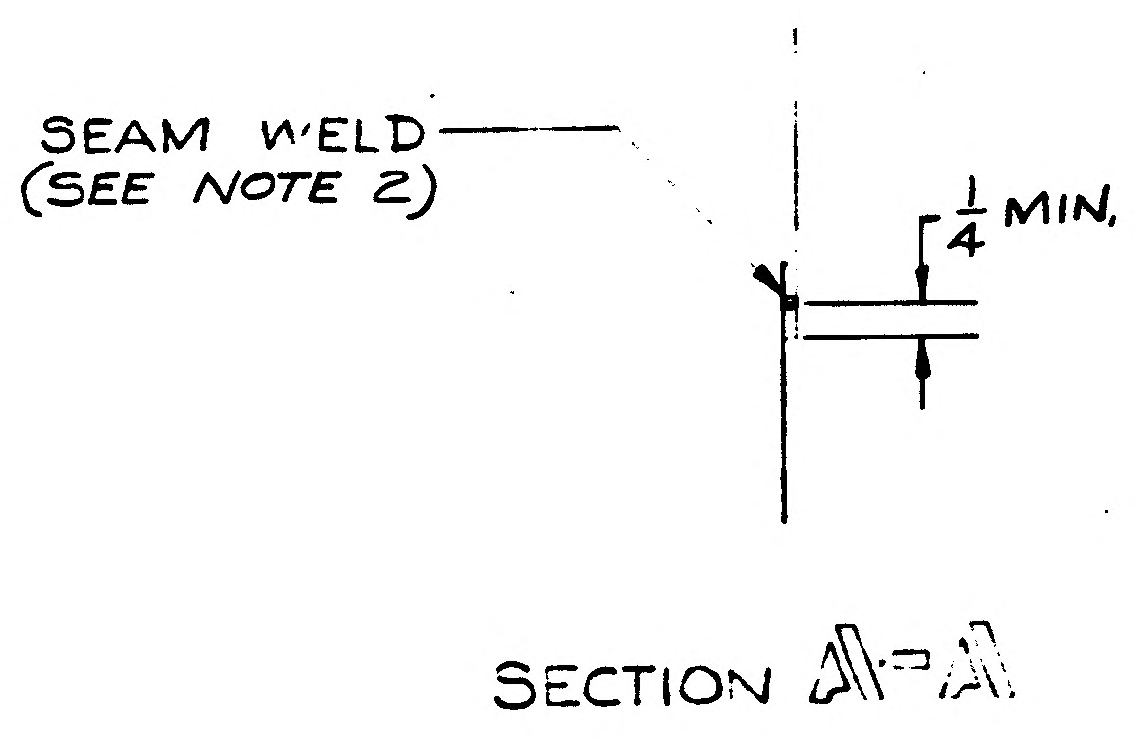

SECTION A-A

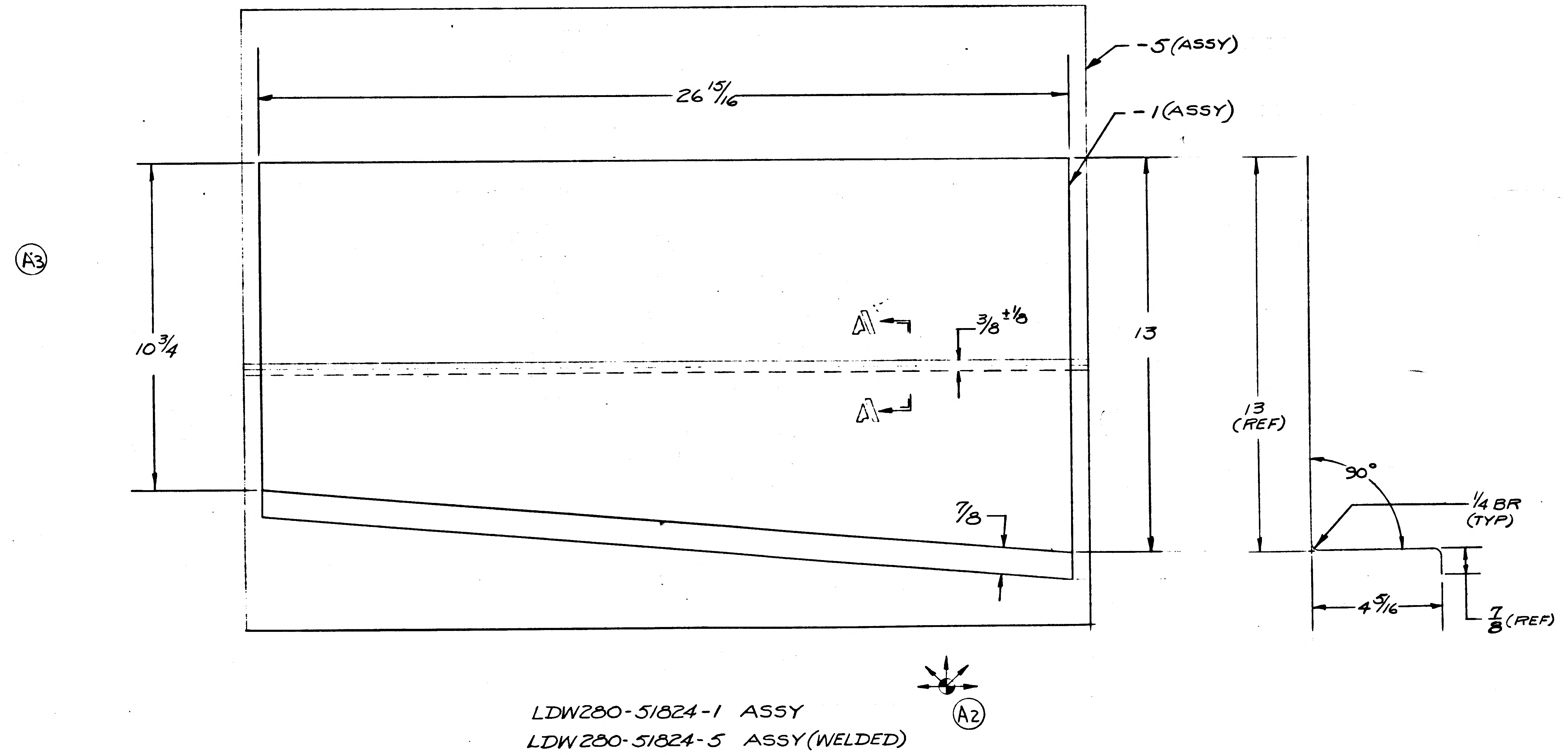

LDW280-51824-1 ASSY
LDW280-51824-5 ASSY (WELDED)

NOTES

1. NO TOOLING HOLES PERMITTED IN PARTS
2. SEAM WELD PER LSP 14-6102
3. FINISH IN ACCORDANCE WITH LPC 280-5
4. PAINTED SURFACES OF -1 & 3 TO BE NEAR SIDE
5. FABRICATION OF -1 & -3 TO BE DONE UNDER CONDITIONS WHICH CONFORM TO LSP 14-0011 LEVEL "C"
6. MANUFACTURED PARTS TO COMPLY WITH REQUIREMENTS OF LPC 280-19. PARTS TO BE MADE FROM .00125 INCONEL 600 PER AMS5540E.

MANUFACTURING OPERATIONS

UNLESS OTHERWISE SPECIFIED
NOTES CHECKED ✓ APPLY TO THIS DWG

PART NUMBER AND ALL OTHER MARKINGS IN REGION MARKED ☒ USE BOTH SIDES IF NECESSARY ☐

FILLET AND INSIDE CORNER RADII TOLERANCES ☐
.016R TO .062R ± .010
.063R TO .250R ± .015
OVER .250R ± .030

DEPTH SHOWN FOR TAPPED HOLES IS FULL THDS 2 3 IMP THDS. BEYOND PERMISSIBLE ☐

EXTERNAL THREAD LENGTH SHOWN INCLUDES 2 IMPERFECT THREADS MAX ☐

DO NOT CADMIUM PLATE & PAINT HOLES OR SURFACES MARKED WITH DOUBLE ASTERISK ☐

MISMATCH STEP OF ± .005 PERMISSIBLE DUE TO CHANGE OF CUTTERS AT INSIDE INTERSECTING SURFACES ☐

DIAMETERS MARKED MUST BE CONCENTRIC WITHIN FULL INDICATOR READING ☐

HOLES MUST BE KEPT FREE OF CHROME PLATING SOLUTION ☐

ALL DIMENSIONS SHOWN TO BE MET AFTER CADMIUM PLATING THICKNESS OF PLATE .0003 MIN TO .0005 MAX MIN THICKNESS TO BE .0002 ON THREADED AREAS NO ALLOWANCES FOR PLATING IN HOLES ☐

125 √ SURFACE ROUGHNESS INCLUDING REAMED HOLES PER MIL STD 10 ☐

200 √ FOR ALL DRILLED HOLES ☐

REMOVE ALL BURRS BREAK ALL EDGES .015 .031 ☐

INSPECTION INFORMATION MINIMUM PERMISSIBLE AVERAGE EDGE DISTANCE MARKED IS ☐

SYMBOL √ DENOTES SURFACE TO BE MACHINED ☐

UNLESS OTHERWISE SPECIFIED TOLERANCE ON FLANGES IS ± 1 32 ☐

LENGTHS OF AN NAS & MS AL ALY RIVETS SHORTER THAN 1 INCH ARE NOT SPECIFIED ☐

TOLERANCE ON LOFTED DELINEATIONS IS ☐

LAYOUT RELEASE TO BE REDRAWN ON PRODUCTION FORMAT

0 1 NAS 9-1100

THIS IS AN ORIGINAL DRAWING

GRUMMAN AIRCRAFT ENGRG CORP. BETHPAGE, L. I., NEW YORK

MODEL OR END ITEM	SIZE	CODE IDENT NO.		
LM	E	26512	LDW280-51824	A
	SCALE HALF		SHEET 3.00	

8

ENG 32.2 REV 3-65

GRUMMAN AIRCRAFT ENGINEERING CORP.
CODE IDENT NO. 26512
ENGINEERING ORDER EM• A

DWG. NO. LEO 280 | EO NO. 421
CONTROL INFO NO. LDW280A-4411

ON THE FOLLOWING DRAWINGS ADD NOTE *

DRAWING NO.	EFF	CHANGE NUMBER	TITLE
LDW280-28730	LTA8 LM-1 THRU LM6	B 2	SEE DWG
LDW280-28734	"	A 8	
LDW280-28735	"	C 3	
LDW280-28796	LTA8(18) LM-1 (31) THRU LM-15(45)	B 3	
LDW280-28747	LTA8 (18) LM-1 (31) THRU LM-6(36)	B 1	
LDW280-28749	"	A 7	
LDW280-28750	"	B 3	
LDW280-28752	"	B 2	
LDW280-28753	"	A 3	
LDW280-28755	LTA8(18) LM-1 (31)	A 7	
LDW280-28756	LTA8(18) LM-1(31) THRU LM-15(45)	A 6	
LDW280-28759	LTA8(18) LM-1(31) THRU LM-6 (36)	B 2	
LDW280-28760	"	B 1	
LDW280-28768	LM-1(31)	B 2	
LDW280-28769	LM-1(31)	B 1	
LDW280-28771	LTA8(18) LM-1(31) THRU LM-6(36)	B 2	
LDW280-28772	"	B 1	
LDW280-28774	"	A 7	
LDW280-28775	"	B 2	
LDW280-28803	"	A 2	
LDW280-28805	"	A 1	
LDW280-51824	LM-1(31) THRU LM-15(45)	A 1	
LDW280-51825	"	A 2	
LDW280-51829	"	A 1	
LDW280-51830	"	A 1	
LDW280-51834	"	A 1	SEE DWG

* MANUFACTURED PARTS TO COMPLY WITH REQUIREMENTS OF LPC 280-19

2

DETAIL SPEC REQ	☐	CL II ENGRG CHG	☐	CL I ENGRG CHG	☐

REASON FOR EO: LPC 280-19 PROVIDES COMPLETE FABRICATION AND INSPECTION INFO

DESCRIPTION OF EO: ADDED NOTE *

GAEC EO RELEASE: ① E 12/20

MODEL	PROCURING ACTIVITY NO.	GAEC UNIT NO.	SUB CONTR UNIT NO.
LM		NOTED	

DRAWING CHANGE REQD: REVISE DWG ✓ | RECORD EO

DISPOSITION OF PARTS: NOT REWORK | REQ'D SCRAP

APPROVED BY								
DATE	12/16/66	12/16/66		12/19/66	12/16/66		12/20	12-20-66
/	VDI	~~SUPPORT~~ THERMO	RELIAB. GROUP	GROUP LEADER	STRESS GROUP	LIAISON ENGRG	PROJ ENGRG	~~GOVT~~

PRIORITY: C

DRAWING TITLE: NOTED

DRAWING NO. LEO 280 | EO NO. 421

ISSUED BY T. AMBROSIO/STRAKOSCH X1153 SECTION VEH DES INT GROUP NO. 335 PL 35

01
NAS 9-1100

B *

ENG 32.1 REV 3-65

GRUMMAN AIRCRAFT ENGINEERING CORP.
CODE IDENT NO. 26512
ENGINEERING ORDER

DWG. NO. LDW280-51824 EO NO. A2
CONTROL INFO NO. LDW280A4564

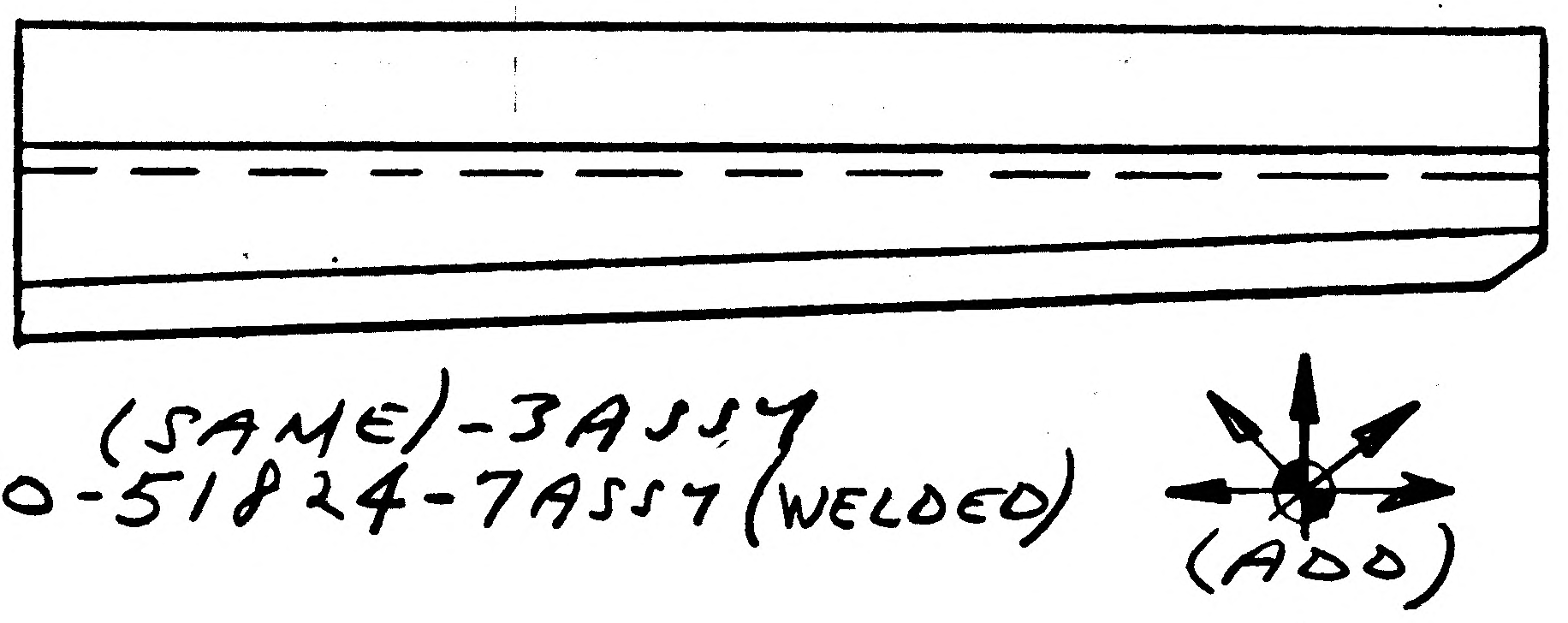

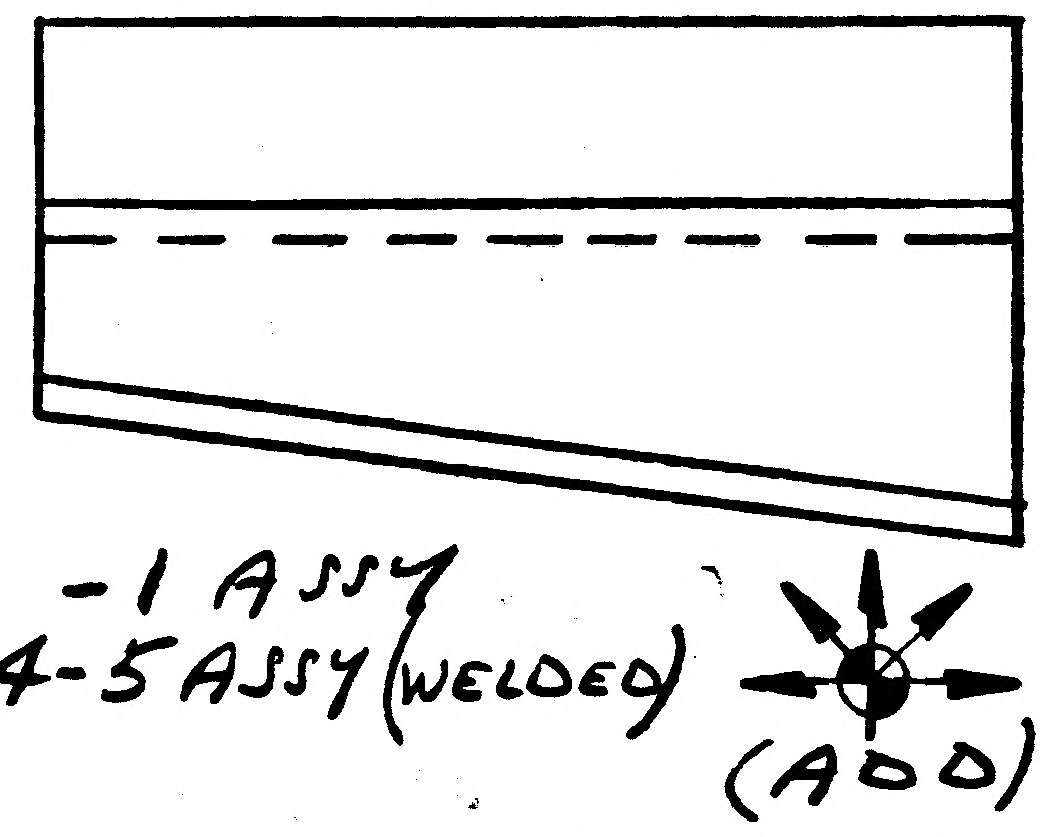

* THIS CHANGE HAS BEEN INCORPORATED ON LM-1 (31)

DETAIL SPEC REQ	☐	CL II ENGRG CHG	☐	CL I ENGRG CHG	☐ THERMAL SHLD (2)

REASON FOR EO: TO PROVIDE COMPLETE FABRICATION & INSPECTION INFO.

DESCRIPTION OF EO: ADDED SYMBOL FOR LAP DIRECTION, ON -1 & -3

GAEC EO RELEASE: 1/4/67

MODEL	EFFECTIVITY: PROCURING ACTIVITY NO.	GAEC UNIT NO.	SUB CONTR UNIT NO.
LM		LM-1 (31)	
		THRU LM-15 (45)	

DRAWING CHANGE REQD		DISPOSITION OF PARTS		APPROVED BY								
✓		NOT REQD		DATE	1/3/67	1/3/67		1/3/67	1/3/67		1-4-67	1/5/67
REVISE DWG	RECORD EO	REWORK	SCRAP	5	VDI	SUPPORT THERMO	RELIAB. GROUP	GROUP LEADER	STRESS GROUP	LIAISON ENGRG	PROJ ENGRG	

PRIORITY	DRAWING TITLE	DRAWING NO.	EO NO.
C	SKIN ASSY - D/S QUAD II - PLUME IMPINGEMENT VALVE PROTECTION	LDW280-51824	A2

ISSUED BY E. ROESSLER x1153 12-20-66 SECTION VEH DES GROUP NO. 335 PL 35

01
NAS 9-1100

C

GRUMMAN AIRCRAFT ENGINEERING CORP.
CODE IDENT NO. 26512
ENGINEERING ORDER *

DWG. NO. LEO 280		EO NO. 559	
CONTROL INFO NO. LDW 280A 6306			

ENG 33.2 REV 3-65

IN B/M FOR ALL DASH NUMBERS OF DRAWINGS LISTED BELOW · REMOVE LDW280-17970 · ALL DASH NUMBERS AND ADD "SEE NOTE *"

IN F/D REMOVE LDW280-17970-ALL DASH NUMBERS

REVISE NOTE *
(REF) "MANUFACTURED PARTS TO COMPLY WITH REQUIREMENTS OF LPC 280-19."
(ADD) PARTS TO BE MADE FROM .00125 INCONEL 600 PER AMS 5540E.

DRAWING No.	CHANGE#	SYMBOL	EFFECTIVITY LTA-8 LM-1 THRU LM-15	TITLE SEE DWG
~~L~~DW280-18130	A7	○	LM-1 THRU LM-15	↑
~~L~~DW280-18141	A3	○	LTA-8 LM-1 THRU LM-3	
~~L~~DW 280-28730	B7	□	LTA-8 LM-1 THRU LM-3	
~~L~~DW 280-28734	B2	□	LTA-8 LM-1 THRU LM-15	
~~L~~DW280-28738	A7	□	LTA-8 LM-1	
~~L~~DW 280-28740	B3	□	LTA-8 LM-1 THRU LM-6	
~~L~~DW 280-28741	A6	□	LTA-8 LM-1 THRU LM-6	
~~L~~DW 280-28744	A7	□	LTA-8 LM-1 THRU LM-15	
~~L~~DW 280-28747	B4	□	LTA-8 LM-1 THRU LM-15	
~~L~~DW 280-28750	39	□	LTA-8 LM-1 THRU LM-15	
~~L~~DW280-28753	A5	□	LTA-8 LM-1 THRU LM-15	
~~L~~DW280-28756	B1	□	LTA-8 LM-1 THRU LM-3	
~~L~~DW280-28760	B5	□	LTA-8 LM-1 THRU LM-6	
~~L~~DW280-28765	A7	○	LM-1	
~~L~~DW280-28769	B2	□	LM-1 THRU LM-15	
~~L~~DW280-28772	B6	□	LTA-8 LM-1 THRU LM-15	
~~L~~DW280-28775	B7	□	LM-1 THRU LM-15	↓
~~L~~DW 280-28805	A6	□	LTA-8 LM-1 THRU LM-15	
~~L~~DW 280-28806	A4	□	LM-1 THRU LM-15	SEE DWG
~~L~~DW 280-51824	A3	□		

NOTE △ MANUFACTURED PARTS TO COMPLY WITH REQUIREMENTS OF LPC 280-19. PARTS TO BE MADE FROM .00125 INCONEL 600 PER AMS 5540E.

NOTE: ALL PARTS MADE USING LDW280-17970 COMPLY WITH LPC 280-19 AND ARE ACCEPTABLE AS IS.

FOR SYM □ REVISE NOTE *.
FOR SYM ○ ADD NOTE △ TO DWG

5
C

DETAIL SPEC REQ	☐	CL II ENGRG CHG	☑	CL I ENGRG CHG	☐										GAEC EO RELEASE	
REASON FOR EO UPDATE DWG TO AGREE WITH MANUFACTURING PROCEDURE					DESCRIPTION OF EO REMOVED LDW280-17970 FROM B/M & F/D (ALL DASH NO'S) FOR DWG'S □ REVISED EXISTING NOTE * BY ADDING "PARTS TO BE MADE FROM .00125 INCONEL 600 PER AMS 5540E." FOR DWG'S ○ ADDED NOTE △										JS 4-19	7
MODEL	EFFECTIVITY				DRAWING CHANGE REQD		DISPOSITION OF PARTS		APPROVED BY							
	PROCURING ACTIVITY NO.	GAEC UNIT NO.	SUB CONTR UNIT NO.		✓		NOT	REQ	DATE 4/10/67			4/10/67	4/11/67		4/13	4-18-67
					REVISE DWG	RECORD EO	REWORK	SCRAP	6	VD1	SUPPORT	RELIAB GROUP	GROUP LEADER	STRESS GROUP	LIAISON ENGRG	PROJ ENGRG	~~GOVT~~
LM		NOTED			PRIORITY		DRAWING TITLE					DRAWING NO.				EO NO.
		ABOVE			C		NOTED					LEO 280				559

ED BY H. PALLMEYER / J. STRAKOSCH SECTION VEH DES INT GROUP NO. 335 PL 25

01

NAS 9-1100

ENG 32.1 REV 3-65

GRUMMAN AIRCRAFT ENGINEERING CORP.
CODE IDENT NO. 26512
ENGINEERING ORDER

DWG. NO. LE0280
EO NO. 707
CONTROL INFO NO. LDW280A9003

IN M/B FOR THE FOLLOWING PART NO'S RESTRICT FOR USE ON LM-1 & LM-2

DWG. No *	TITLE	CHG. LTR
✓ LDW280-51824-1&-3	SEE	A4
LDW280-51825-1&-3	DWG	A3
LDW280-51826-1&-3		A2

DETAIL SPEC REQ ☐ CL II ENGRG CHG ☐ CL I ENGRG CHG ✓ LCD 1244

5

REASON FOR EO: PROVISION FOR FITH SHIELD

DESCRIPTION OF EO: RESTRKTED * FOR USE ON LM-1 & LM-2 WAS USED ON LM-1 THRU LM-15

Ⓡ GAEC EO RELEASE: VK 9/9/67

MODEL	PROCURING ACTIVITY NO.	GAEC UNIT NO.	SUB CONTR UNIT NO.
LM		LM 3(33) THRU	LM-15(45)

DRAWING CHANGE REQD: REVISE DWG ✓ RECORD EO ☐

DISPOSITION OF PARTS: REWORK ☐ SCRAP ✓

APPROVED BY								
DATE	9/7			9/7/67	9/8/67		9/3	9-9-67
	VDI	SUPPORT	RELIAB. GROUP	GROUP LEADER	STRESS GROUP	LIAISON ENGRG	PROJ ENGRG	~~GAEC~~

PRIORITY: C
DRAWING TITLE: NOTED
DRAWING NO.: LE0280
EO NO.: 707

9-8-67
ISSUED BY G. ZEMAN / J. STRAROSCH SECTION VDI GROUP NO. 335 PL 25

01 NAS 9-1100

ENG 32.1 REV 3-65

GRUMMAN AIRCRAFT ENGINEERING CORP.
CODE IDENT NO. 26512
ENGINEERING ORDER

DWG. NO. LDW280-51824
EO NO. A5
CONTROL INFO NO. LDW280B0044

IN MOD/BLK

ON-1 & -3 SKIN ASSY ADD EFF - LDW 420-2370 SER. #1 (4) REQ'D EACH
N/A LDW 280-51826

LFM

DETAIL SPEC REQ		CL II ENGRG CHG		CL I ENGRG CHG	✓ LCD 2193

REASON FOR EO	DESCRIPTION OF EO	GAEC EO RELEASE
ADDITIONAL F.I.T.H. SHIELD TEST REQUIREMENTS	ON-1 & -3 ADDED EFF LDW420-2370 SER. #1 (4) REQ'D EACH	Ⓡ 5 JK 10/31/67

EFFECTIVITY: EI

MODEL	~~PROCURING ACTIVITY NO.~~	GAEC UNIT NO.	SUB CONTR UNIT NO.
LM	LFM 420-	2370-001	
LM	LDW 420-	2370 SER. #1	

DRAWING CHANGE REQD		DISPOSITION OF PARTS	
✓ REVISE DWG	RECORD EO	NOT REQ'D REWORK	SCRAP

APPROVED BY								
DATE	10/27	10/27		10-27-67	10/27/67	10/30/67	10/31/67	10-31-67
—	V.D.I.	~~SUPPORT~~	RELIAB. GROUP	GROUP LEADER	STRESS GROUP	LIAISON ENGRG	PROJ ENGRG	~~GOVT~~

PRIORITY	DRAWING TITLE	DRAWING NO.	EO NO.
C	SKIN ASSY ~ D/S QUAD II ~ PLUME IMPINGEMENT VALVE PROTECTION	LDW280-51824	A5

ISSUED BY DON THOMAS / P. THORJUSEN SECTION V.D.I. x1153 GROUP NO. 335 PL 25
11-3-67

01

NAS 9-1100

ENG 32.1 REV 3-65

GRUMMAN AIRCRAFT ENGINEERING CORP.
CODE IDENT NO. 26512

ENGINEERING ORDER

DWG. NO. LEO 280
EO NO. 792
CONTROL INFO NO. LDW 280 B0290

IN M/B:
FOR THE FOLLOWING DWGS (ALL* DASH NO'S INVOLVED) REVISE LFM NO AS
SHN. LFM 420-2370-004 WAS LFM 420-2370-001

DWG.	* NO.	TITLE	CHANGE NO
LTM280P15300	*	SEE DWG	A1
LDW280-51564	*	SEE DWG	A5
LDW280-51826	*	SEE DWG	A4
LDW280-51824	*	SEE DWG	A6
LDW280-51825	*	SEE DWG	A5
LDW280P51123	*	SEE DWG.	B2

DETAIL SPEC REQ ☐ CL II ENGRG CHG ☐ CL I ENGRG CHG ✓ LCD 2193 (5)

REASON FOR EO: CORRECTION OF LFM NO' PER LCD 2193 "E" REV

DESCRIPTION OF EO: IN MOD BLK FOR* LFM 420-2370-004 WAS LFM 420-2370-001

GAEC EO RELEASE: JK 11/8/7

MODEL	EFFECTIVITY: ~~PROCURING ACTIVITY NO.~~ ET	GAEC UNIT NO.	SUB CONTR UNIT NO.
LM	LDW 420-2320 SN#1		
LM	LFM 420-2370-004		

DRAWING CHANGE REQD: REVISE DWG ✓ RECORD EO
DISPOSITION OF PARTS: REWORK NOT REQD; SCRAP REQD

		SUPPORT	RELIAB. GROUP	GROUP LEADER	STRESS GROUP	LIAISON ENGRG	PROJ ENGRG	
APPROVED BY								
DATE	11/3/67			11-3-67	11/3/67		11/3/67	11-7-67
	VDI							

PRIORITY: C
DRAWING TITLE: NOTED
DRAWING NO. LEO 280
EO NO. 792

ISSUED BY: 11667 DON RAGAS X1153 SECTION VDI GROUP NO. 335 PL 25

01

NAS 9-1100

2.1 REV 3-65

GRUMMAN AIRCRAFT ENGINEERING CORP.
CODE IDENT NO. 26512
ENGINEERING ORDER

DWG. NO. LDW280-51824
EO NO. A1
CONTROL INFO NO. LDW280B1024

IN MOD/BLK
ON-1 & -3 SKIN ASSY N/A LDW280-51826 (5) REQ'D EACH WAS (4).

LFM

DETAIL SPEC REQ ☐ CL II ENGRG CHG ☐ CL I ENGRG CHG ✓ LCD 2193 (5)

REASON FOR EO: ADDITIONAL TEST REQUIREMENTS

DESCRIPTION OF EO: IN MOD/BLK ON-1 & -3 (5) REQ'D EACH WAS (4) REQ'D EACH ON N/A LDW280-51826

Ⓡ GAEC EO RELEASE: JK 1/3/8

MODEL	E.I. EFFECTIVITY ~~PROCURING ACTIVITY~~ NO.	S/N ~~GAEC UNIT NO.~~	SUB CONTR UNIT NO.
LM	LFM420-	2370-004	
LM	LDW420-	2370 SER	#1

DRAWING CHANGE REQD		DISPOSITION OF PARTS		APPROVED BY								
		NOT	REQ'D	DATE	1/2/68			1-2-68	1-2-68		1/2/68	1-3-68
✓ REVISE DWG	RECORD EO	REWORK	SCRAP	—	V.D.I.	SUPPORT	RELIAB. GROUP	GROUP LEADER	STRESS GROUP	LIAISON ENGRG	PROJ ENGRG	GOVT

NM

PRIORITY: C
DRAWING TITLE: SKIN ASSY - D/S QUAD II - PLUME IMPINGEMENT VALVE PROT.
DRAWING NO.: LDW280-51824
EO NO.: A1

010468
ISSUED BY DON THOMAS / P. THORJUSEN SECTION V.D.I. x1153 GROUP NO. 335 PL 25

01

NAS 9-1100

C

ENG 32.1 REV 3-65

GRUMMAN AIRCRAFT ENGINEERING CORP.
CODE IDENT NO. 26512

ENGINEERING ORDER

DWG. NO. LEO280
EO NO. 830
CONTROL INFO NO. LDW280B1124

ON THE FOLLOWING DRAWINGS CANCEL EO'S AS NOTED BELOW.

DRAWING NO.	TITLE	CANCEL EO *	CANCELLING CHANGE #
✓ LDW280P51123	BLANKET INSTL	B5	B6
✓ LDW280-51564	SKIN ASSY FENCE	A6	A7
✓ LDW280-51824	SKIN ASSY	A7	A8
LDW280-51825	FOIL ASSY	A6	A7
LDW280-51826	SHIELD ASSY	A5	A6
LTM280P15300	BLANKET ASSY	A2	A3

LFM

DETAIL SPEC REQ ☐ CL II ENGRG CHG ☐ CL I ENGRG CHG ✓ LCD 2193

(5)

PKG 2

REASON FOR EO: CANCELLATION OF ADDITIONAL TEST REQUIREMENTS

DESCRIPTION OF EO: CANCELLED EO * AND ADDITIONAL QTY REQMT CREATED THEREON

GAEC EO RELEASE: JK 1/9/68

MODEL	~~PROCURING~~ ACTIVITY NO.	EFFECTIVITY S/N ~~GAEC UNIT NO.~~	SUB CONTR UNIT NO.
	E I		
LM	LFM 420-	2370-004	
LM	LDW 420-	2370 SER #1	

DRAWING CHANGE REQD: REVISE DWG ✓ RECORD EO

DISPOSITION OF PARTS: REWORK SCRAP ✓

APPROVED BY								
DATE 1/6/68			1-6-68	1/8/68		1/6/68	Botti 1-9-68	
V.D.I.	SUPPORT	RELIAB. GROUP	GROUP LEADER	STRESS GROUP	LIAISON ENGRG	PROJ ENGRG		

PRIORITY C

DRAWING TITLE NOTED *

DRAWING NO. LEO280

EO NO. 830

010968

ISSUED BY DON RAGAS / P. THORJUSEN SECTION V.D.I. x 1153 GROUP NO. 335 PL 25

01

NAS 9-1100

LDW280-51825

MODEL OR END ITEM	NEXT ASSY	MODULE OR SER NO.	REQD PER MODULE OR END ITEM
LM	LDW280-51826	LM-15(45)	2 EA
		LM-14(44)	
		LM-13(43)	
		LM-12(42)	
		LM-11(41)	
		LM-10(40)	
		LM-9(39)	
		LM-8(38)	
		LM-7(37)	
		LM-6(36)	
		LM-5(35)	
		LM-4(34)	
		LM-3(33)	
		LM-2(32)	
LM	LDW280-51826	LM-1(31)	2EA
PART NO. LDW280-51825-1 &-3		GAEC SCH NO. 52	

2

SH REV STATUS: FOR DESCRIPTION OF REV SEE SUBQ SH

SHEET	1.00
REV	
SHEET	2.00
REV	
SHEET	3.00
REV	

LAST SECT LTR USED A

LAST DASH NO. USED -11

GRUMMAN REL'G INFO

PRIM NO. 001 EMF

207 MP-14 10-26-6

UNLESS OTHERWISE SPECIFIED DIMENSIONS ARE IN INCHES.
TOLERANCE UNLESS SPECIFIED
FRACTIONS - DECIMALS – ANGLES
± 1/16 ±.020 ± 1/2°

ORIG DWG AUTH
DETAIL SPEC REQUIREMENT
CLASS II ENGRG CHANGE
CLASS I ENGRG CHANGE

CONTRACT NO. NAS 9-1100
LINE ITEM NO. 1
DOCUMENTATION TYPE II

DRAWN BY F. MADDEN
LAYOUT BY F. MADDEN
CHECKED BY
GRP LDR 10/4/66
VEH. DES
STRUCT 10/21/66
STRUCT Hildebrand 10/21
WEIGHTS
RELIAB
THERMO 10/21/66
PROJ ENGR 10-21
REL GROUP 10/25/66

GRUMMAN AIRCRAFT ENGRG CORP
BETHPAGE, L. I., NEW YORK

FOIL ASSY ~ DESCENT STAGE
QUAD II ~ PLUME IMPINGEMENT
VALVE PROTECTION

SIZE B
CODE IDENT NO. 26512
LDW280-51825
SCALE NONE
SHEET 1 OF 3

ENG 77 1 12-65

CDR 10-21-66

01

NAS 9-1100

	-11	-9	-7	-5	-3	-1	CODE IDENT	PART NO.	I&T	NOMENCLATURE OR DESCRIPTION	MATERIAL	GOVT SPEC	COML SPEC	STOCK SIZE	PROCESS SYM	FINISH NO.	ZONE
		2						LDW280-17950-41		FOIL	SEE DWG						
	2							LDW280-17950-15		FOIL	SEE DWG						
			1		1			LDW280-51825-11		FOIL ASSY	(WELD)				FLW	NONE	
				1		1		LDW280-51825-9		FOIL ASSY	(WELD)						
					1			LDW280-51825-7		FOIL ASSY							
						1		LDW280-51825-5		FOIL ASSY							
								LDW280-51825-3		FOIL ASSY							
								LDW280-51825-1		FOIL ASSY					FLW	NONE	

QTY PER ASSEMBLY

SYM OR NO.	PROCESS OR FINISH	GRUMMAN SPEC OR MILITARY SPEC	SYM OR NO.	PROCESS OR FINISH	GRUMMAN SPEC OR MILITARY SPEC	SYM OR NO.	PROCESS OR FINISH	GRUMMAN SPEC OR MILITARY SPEC
						FLW	RESISTANCE WELDING	LSP14-6102

I & T: IDENTIFICATION AND TRACEABILITY IN ACCORDANCE WITH : NONE

GRUMMAN AIRCRAFT ENGRG CORP, BETHPAGE, L. I., NEW YORK

SIZE B | CODE IDENT NO. 26512 | LDW280-51825

SCALE NONE | SHEET 2.00

ENG 77.2 7-65

01

NAS 9-1100

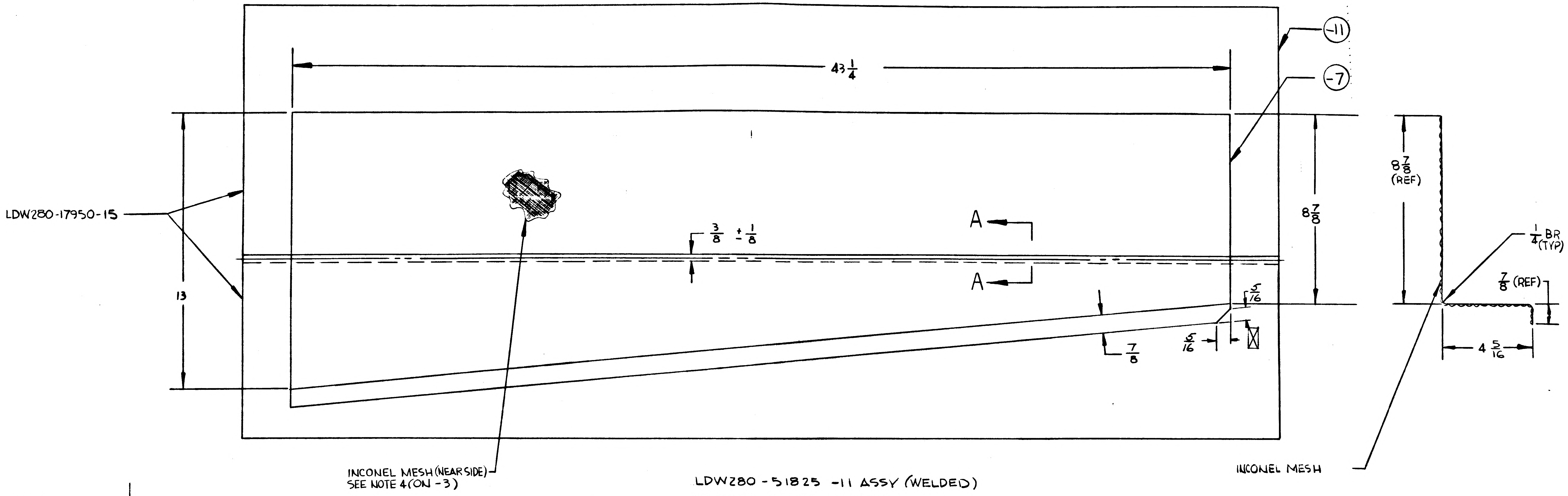
43 1/4
-11
-7
LDW280-17950-15
13
3/8 ± 1/8
A
A
8 7/8
5/16
7/8
5/16
8 7/8 (REF)
1/4 BR (TYP)
7/8 (REF)
4 5/16
INCONEL MESH (NEAR SIDE) SEE NOTE 4 (ON -3)
INCONEL MESH

LDW280-51825 -11 ASSY (WELDED)
LDW280-51825 -7 ASSY
LDW 280-518 25 -3 ASSY

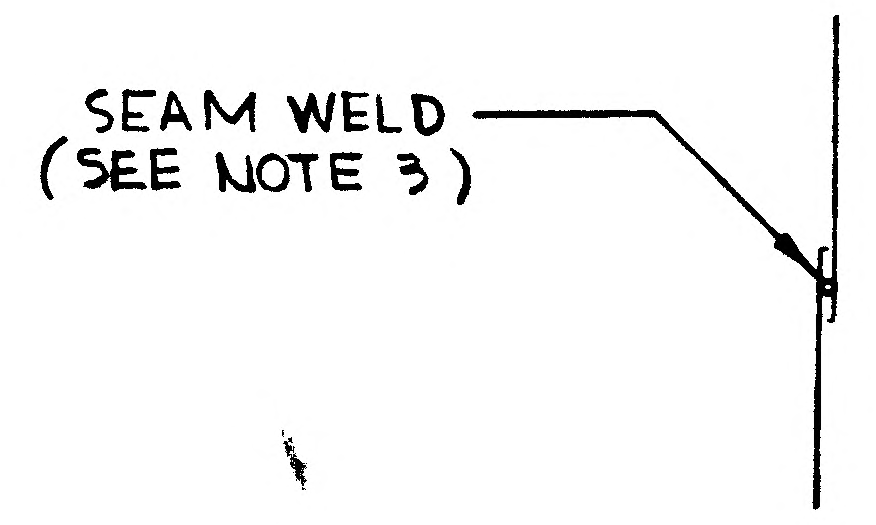
SEAM WELD
(SEE NOTE 3)

SECTION A-A

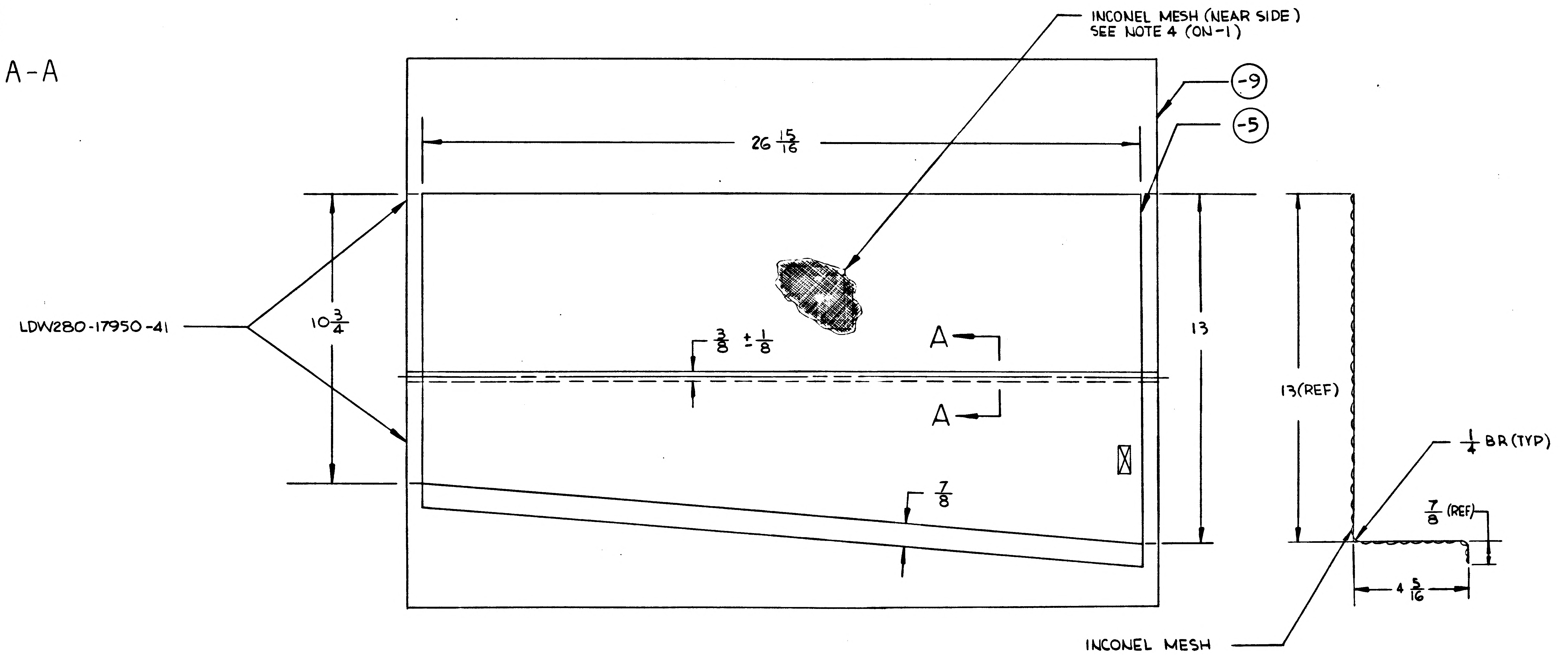
INCONEL MESH (NEAR SIDE) SEE NOTE 4 (ON -1)
-9
-5
26 15/16
LDW280-17950-41
10 3/4
3/8 ± 1/8
A
A
13
13 (REF)
7/8
1/4 BR (TYP)
7/8 (REF)
4 5/16
INCONEL MESH

LDW280-51825-9 ASSY (WELDED)
LDW280-51825-5 ASSY
LDW280-51825-1 ASSY

NOTES:

1. NO TOOLING HOLES PERMITTED IN PARTS.
2. FABRICATION TO BE DONE UNDER CONDITIONS WHICH CONFORM TO LSP14-0001 LEVEL "C".
3. SEAM WELD PER LSP14-6102.
4. WELD INCONEL KNITTED SLEEVING TO FOIL ASSY AS PER LDW280-17522.
5. INCONEL KNITTED SLEEVING MAY BE PURCHASED FROM MONTGOMERY METAL FABRIC CO. 59 CANAL ST., WINSDOR LOCKS, CONN. (CODE IDENT. 94725)
6. INCONEL KNITTED SLEEVING TO BE OXIDIZED BY EXPOSURE TO 1650 ± 50° F IN AIR FOR FOUR (4) HOURS.

MANUFACTURING OPERATIONS UNLESS OTHERWISE SPECIFIED NOTES CHECKED ✓ APPLY TO THIS DWG.	
PART NUMBER AND ALL OTHER MARKINGS IN REGION MARKED ☒ USE BOTH SIDES IF NECESSARY.	✓
FILLET AND INSIDE CORNER RADII TOLERANCES .016R TO .062R ± .010 .063R TO .250R ± .015 OVER .250R ± .030	
DEPTH SHOWN FOR TAPPED HOLES IS FULL THDS. 2-3 IMP. THDS. BEYOND PERMISSIBLE	
EXTERNAL THREAD LENGTH SHOWN INCLUDES 2 IMPERFECT THREADS MAX.	
DO NOT CADMIUM PLATE & PAINT HOLES OR SURFACES MARKED WITH DOUBLE ASTERISK	
MISMATCH STEP OF ± .005 PERMISSIBLE DUE TO CHANGE OF CUTTERS AT INSIDE INTERSECTING SURFACES.	
DIAMETERS MARKED MUST BE CONCENTRIC WITHIN FULL INDICATOR READING	
HOLES MUST BE KEPT FREE OF CHROME PLATING SOLUTION.	
ALL DIMENSIONS SHOWN TO BE MET AFTER CADMIUM PLATING. THICKNESS OF PLATE .0003 MIN TO .0005 MAX. MIN THICKNESS TO BE .0002 ON THREADED AREAS. NO ALLOWANCES FOR PLATING IN HOLES	
125 √ SURFACE ROUGHNESS INCLUDING REAMED HOLES PER MIL-STD-10	
200 √ FOR ALL DRILLED HOLES	
REMOVE ALL BURRS. BREAK ALL EDGES .015-.031	
INSPECTION INFORMATION MINIMUM PERMISSIBLE AVERAGE EDGE DISTANCE MARKED IS	
SYMBOL √ DENOTES SURFACE TO BE MACHINED	
UNLESS OTHERWISE SPECIFIED TOLERANCE ON FLANGES IS ± 1/32	
LENGTHS OF AN. NAS & MS AL ALY RIVETS SHORTER THAN 1 INCH ARE NOT SPECIFIED	
TOLERANCE ON LOFTED DELINEATIONS IS	

NAS 9-1100

GRUMMAN AIRCRAFT ENGRG CORP. BETHPAGE, L. I., NEW YORK

MODEL OR END ITEM	SIZE	CODE IDENT NO.	
LM	E	26512	LDW280-51825
	SCALE 1/2		SHEET 3.0

LDW280-51825

ENG 32.1 REV 3-65

GRUMMAN AIRCRAFT ENGINEERING CORP.
CODE IDENT NO. 26512
ENGINEERING ORDER EMF-A

DWG. NO. LDW 280-51825
EO NO. A1
CONTROL INFO NO. LDW280A-3120

IN B/M ADD:-
INCONEL KNITTED SLEEVING, AS REQ'D ON -1 & -3 ASSY

THERMAL SHLD
2

DETAIL SPEC REQ		CL II ENGRG CHG	✓	CL I ENGRG CHG	

REASON FOR EO: DRAWING CORRECTION (REQ'D MATL NOT CALLED OUT)

DESCRIPTION OF EO: IN B/M ADD:- INCONEL KNITTED SLEEVING, AS REQ'D ON -1 & -3 ASSY

GAEC EO RELEASE: FR 12/13/66

MODEL	PROCURING ACTIVITY NO.	GAEC UNIT NO.	SUB CONTR UNIT NO.
LM		LM-1 (31)	
LM		THRU	
LM		LM-15 (45)	

DRAWING CHANGE REQD		DISPOSITION OF PARTS		APPROVED BY								
✓		NOT	REQ'D	DATE	12/13/66	12/13		12/12/66	12/13		12/13	12-13-66
REVISE DWG	RECORD EO	REWORK	SCRAP	1	VDI	SUPPORT THERMO	RELIAB. GROUP	GROUP LEADER	STRESS GROUP	LIAISON ENGRG	PROJ ENGRG	~~GOVT~~

DWS FOR BARTHUCCI

PRIORITY: C
DRAWING TITLE: FOIL ASSY~D/S QUAD II~ PLUME IMPINGEMENT, VALVE PROT.
DRAWING NO.: LDW280-51825
EO NO.: A1

ISSUED BY F. MADDEN / J. STRAKOSCH SECTION VEH. DES. GROUP NO. 335 PL 35

01

NAS 9-1100

8

ENG 32.2 REV 3-66

GRUMMAN AIRCRAFT ENGINEERING CORP.
CODE IDENT NO. 26512
ENGINEERING ORDER EM- A

DWG. NO. LEO 280
EO NO. 421
CONTROL INFO NO. LDW280A-4411

ON THE FOLLOWING DRAWINGS ADD NOTE *

DRAWING NO.	EFF	CHANGE NUMBER	TITLE
			SEE DWG
LDW280-28730	LTA8 LM-1 THRU LM6	B 2	
LDW280-28734	"	A 8	
LDW280-28735	"	C 3	
LDW280-28746	LTA8(18) LM-1 (31) THRU LM-15(45)	B 3	
LDW280-28747	LTA8 (18) LM-1 (31) THRU LM-6(36)	B 1	
LDW280-28749	"	A 7	
LDW280-28750	"	B 3	
LDW280-28752	"	B 2	
LDW280-28753	"	A 3	
LDW280-28755	LTA8(18) LM-1(31)	A 7	
LDW280-28756	LTA8(18) LM-1(31) THRU LM-15(45)	A 6	
LDW280-28759	LTA8(18) LM-1(31) THRU LM-6(36)	B 2	
LDW280-28760	"	B 1	
LDW280-28768	LM-1(31)	B 2	
LDW280-28769	LM-1(31)	B 1	
LDW280-28771	LTA8(18), LM-1(31) THRU LM-6(36)	B 2	
LDW280-28772	"	B 1	
LDW280-28774	"	A 7	
LDW280-28775	"	B 2	
LDW280-28803	"	A 2	
LDW280-28805	"	A 1	
LDW280-51824	LM-1(31) THRU LM-15(45)	A 1	
LDW280-51825	"	A 2	
LDW280-51829	"	A 1	
LDW280-51830	"	A 1	
LDW280-51834	"	A 1	SEE DWG

* MANUFACTURED PARTS TO COMPLY WITH REQUIREMENTS OF LPC 280-19

2

DETAIL SPEC REQ ☐ CL II ENGRG CHG ☐ CL I ENGRG CHG ☐

REASON FOR EO	DESCRIPTION OF EO	GAEC EO RELEASE
LPC 280-19 PROVIDES COMPLETE FABRICATION AND INSPECTION INFO	ADDED NOTE *	12/20

MODEL	PROCURING ACTIVITY NO.	GAEC UNIT NO.	SUB CONTR UNIT NO.
LM		NOTED	

DRAWING CHANGE REQD		DISPOSITION OF PARTS	
✓		NOT	REQ'D
REVISE DWG	RECORD EO	REWORK	SCRAP

APPROVED BY		AB							
DATE	12/16/66	12/16/66			12/19/66	12/16/66		12/20	12-20-66
	/	VDI	~~SUPPORT~~ THERMO	RELIAB. GROUP	GROUP LEADER	STRESS GROUP	LIAISON ENGRG	PROJ ENGRG	~~GOVT~~

PRIORITY: C
DRAWING TITLE: NOTED
DRAWING NO.: LEO 280
EO NO.: 421

ISSUED BY T. AMBROSIO / STRAKOSCH X1153 SECTION VEH DES INT GROUP NO. 335 PL 35

01 NAS 9-1100

ENG 32.1 REV 3-65

GRUMMAN AIRCRAFT ENGINEERING CORP.
CODE IDENT NO. 26512
ENGINEERING ORDER

DWG. NO. LE0280
EO NO. 707
CONTROL INFO NO. LDW280A9003

IN M/B FOR THE FOLLOWING PART NO's RESTRICT FOR USE ON LM-1 & LM-2

DWG. No *	TITLE	CHG. LTR
✓ LDW280-51824-1&-3	SEE	A4
✓ LDW280-51825-1&-3	DWG	A3
LDW280-51826-1&-3		A2

DETAIL SPEC REQ		CL II ENGRG CHG		CL I ENGRG CHG	✓	LCD 1244 3

REASON FOR EO: PROVISION FOR FITH SHIELD

DESCRIPTION OF EO: RESTRKTED * FOR USE ON LM-1 & LM-2 WAS USED ON LM-1 THRU LM-15

Ⓡ GAEC C EO RELEASE: 9/9/67

MODEL	PROCURING ACTIVITY NO.	GAEC UNIT NO.	SUB CONTR UNIT NO.
LM		LM-3(33) THRU	LM-15(45)

DRAWING CHANGE REQD: REVISE DWG ✓ | RECORD EO

DISPOSITION OF PARTS: REWORK | SCRAP ✓

APPROVED BY								
DATE	9/7			9/7/67	9/8/67		9/8	9-9-67
	VDI	SUPPORT	RELIAB. GROUP	GROUP LEADER	STRESS GROUP	LIAISON ENGRG	PROJ ENGRG	GOVT

PRIORITY: C

DRAWING TITLE: NOTED

DRAWING NO.: LE0280

EO NO.: 707

9-8-67
ISSUED BY G. ZEMAN / J. STRAKOSCH SECTION VDI GROUP NO. 335 PL 25

01

NAS 9-1100

ENG 32.1 REV 3-65

GRUMMAN AIRCRAFT ENGINEERING CORP.
CODE IDENT NO. 26512
ENGINEERING ORDER

DWG. NO. LDW280-51825
EO NO. A4
CONTROL INFO NO. LDW280 B0045

IN MOD/BLK

ON-1 & -3 FOIL ASSY ADD EFF LDW420-2370 SER.#1 (8) REQ'D EACH
N/A LDW 280-51826

LFM

DETAIL SPEC REQ ☐ CL II ENGRG CHG ☐ CL I ENGRG CHG ✓ LCD 2193

REASON FOR EO	DESCRIPTION OF EO	GAEC EO RELEASE
ADDITIONAL F.I.T.H. SHIELD TEST REQUIREMENTS	ON-1 & -3 ADDED EFF LDW420-2370 SER.#1 (8) REQ'D EACH.	JK 10/31/67

MODEL	E.I. ~~PROCURING ACTIVITY NO.~~	GAEC UNIT NO.	SUB CONTR UNIT NO.
LM	LFM 420	-2370-001	
LM	LDW 420	-2370 SER #1	

DRAWING CHANGE REQD: REVISE DWG	RECORD EO	DISPOSITION OF PARTS: REWORK	SCRAP
✓		NOT REQ'D	

APPROVED BY								
DATE	10-27-67	10/27		10-27-67	10/27/67	10/30/67	10/31/67	10-31-67
—	V.D.I.	THER-SUPPORT	RELIAB. GROUP	GROUP LEADER	STRESS GROUP	ENGRG	PROJ ENGRG	

PRIORITY	DRAWING TITLE	DRAWING NO.	EO NO.
C	FOIL ASSY ~ D/S QUAD II ~ PLUME IMPINGEMENT VALVE PROTECT	LDW280-51825	A4

ISSUED BY DON THOMAS / P. THORJSEN SECTION V.D.I. x1153 GROUP NO. 335 PL 25
11-3-67

01

NAS 9-1100

ENG 32.1 REV 3-65

GRUMMAN AIRCRAFT ENGINEERING CORP.
CODE IDENT NO. 26512
ENGINEERING ORDER

DWG. NO. LEO 280
EO NO. 792
CONTROL INFO NO. LDW 280 B0290

IN M/B:
FOR THE FOLLOWING DWGS (ALL * DASH NO'S INVOLVED) REVISE LFM NO AS
SHN. LFM 420-2370-004 WAS LFM 420-2370-001

DWG.	+ NO.	TITLE	CHANGE NO
LTM280P15300	*	SEE DWG	A1
LDW280-51564	*	SEE DWG	A5
LDW280-51826	*	SEE DWG	A4
LDW280-51824	*	SEE DWG	A6
LDW280-51825	*	SEE DWG	A5
LDW280P51123	*	SEE DWG.	B2

(5)

DETAIL SPEC REQ ☐ CL II ENGRG CHG ☐ CL I ENGRG CHG ☑ LCD 2193

REASON FOR EO: CORRECTION OF LFM NO' PER LCD 2193 "E" REV

DESCRIPTION OF EO: IN MOD BLK FOR * LFM 420-2370-004 WAS LFM 420-2370-001

GAEC C EO RELEASE: JK 11/8/7

MODEL	EFFECTIVITY: ET ~~PROCURING ACTIVITY NO.~~	GAEC UNIT NO.	SUB CONTR UNIT NO.
LM	LDW 420-2370 SN#1		
LM	LFM 420-2370-004		

DRAWING CHANGE REQD		DISPOSITION OF PARTS		APPROVED BY								
				DATE	11/3/67			11-3-67	11/3/67		11/3/67	11-7-67
REVISE DWG	RECORD EO	NOT REQD REWORK	SCRAP		VDI	SUPPORT	RELIAB. GROUP	GROUP LEADER	STRESS GROUP	LIAISON ENGRG	PROJ ENGRG	

PRIORITY: C
DRAWING TITLE: NOTED
DRAWING NO.: LEO 280
EO NO.: 792

11667
ISSUED BY DON RAGAS X1153 SECTION VDI GROUP NO. 335 PL 25

01

NAS 9-1100

ENG 32.1 REV 3-65

GRUMMAN AIRCRAFT ENGINEERING CORP.
CODE IDENT NO. 26512

ENGINEERING ORDER

DWG. NO. LDW280-51825 | EO NO. A6

CONTROL INFO NO. LDW280 B1025

IN MOD/BLK
ON-1 & -3 FOIL ASSY N/A LDW280-51826 (10) REQ'D EACH WAS (8).

LFM

DETAIL SPEC REQ		CL II ENGRG CHG		CL I ENGRG CHG	✓	LCD 2193 (5)

REASON FOR EO: ADDITIONAL TEST REQUIREMENTS

DESCRIPTION OF EO: IN MOD/BLK ON-1 & -3 (10) REQ'D EACH WAS (8) REQ'D EACH ON N/A LDW280-51826.

GAEC EO RELEASE: VC 1/3/8

MODEL	E.I. ~~PROCURING ACTIVITY NO.~~	EFFECTIVITY S/N ~~GAEC UNIT NO.~~	SUB CONTR UNIT NO.
LM	LFM 420-	2370-004	
LM	LDW420-	2370 SER #1	

DRAWING CHANGE REQD		DISPOSITION OF PARTS	
✓		NOT REQ'D	
REVISE DWG	RECORD EO	REWORK	SCRAP

APPROVED BY									
DATE	1/2/68			1-2-68	1-2-68		1/2/68	1-3-68
—	V.D.I.	SUPPORT	RELIAB. GROUP	GROUP LEADER	STRESS GROUP	LIAISON ENGRG	PROJ ENGRG	~~[illegible]~~

PRIORITY: C

DRAWING TITLE: FOIL ASSY ~ D/S QUAD II PLUME IMPINGEMENT VALVE PROTECTION

DRAWING NO.: LDW280-51825

EO NO.: A6

010468
ISSUED BY DON THOMAS / P. THORJUSEN SECTION V.D.I. x1153 GROUP NO. 335 PL 25

01

NAS 9-1100

C

ENG 32.1 REV 3-65

GRUMMAN AIRCRAFT ENGINEERING CORP.
CODE IDENT NO. 26512
ENGINEERING ORDER

DWG. NO. LEO280
EO NO. 830
CONTROL INFO NO. LDW280B1124

ON THE FOLLOWING DRAWINGS CANCEL EO'S AS NOTED BELOW.

DRAWING NO.	TITLE	CANCEL EO *	CANCELLING CHANGE #
✓ LDW280P51123	BLANKET INSTL	B5	B6
✓ LDW280-51564	SKIN ASSY FENCE	A6	A7
✓ LDW280-51824	SKIN ASSY	A7	A8
✓ LDW280-51825	FOIL ASSY	A6	A7
LDW280-51826	SHIELD ASSY	A5	A6
LTM280P15300	BLANKET ASSY	A2	A3

LFM

(5)

DETAIL SPEC REQ ☐ CL II ENGRG CHG ☐ CL I ENGRG CHG ✓ LCD 2193 PKG 2

REASON FOR EO: CANCELLATION OF ADDITIONAL TEST REQUIREMENTS

DESCRIPTION OF EO: CANCELLED EO * AND ADDITIONAL QTY REQMT CREATED THEREON

GAEC EO RELEASE: JK 1/9/68

MODEL	EI ~~PROCURING~~ ACTIVITY NO.	EFFECTIVITY S/N ~~GAEC UNIT NO.~~	SUB CONTR UNIT NO.
LM	LFM 420-	2370-004	
LM	LDW 420-	2370 SER #1	

DRAWING CHANGE REQD		DISPOSITION OF PARTS	
REVISE DWG	RECORD EO	REWORK	SCRAP
✓			✓

APPROVED BY							Botti
DATE	1/6/68			1-6-68	1/6/68	1/6/68	1-9-68
—	V.D.I.	SUPPORT	RELIAB. GROUP	GROUP LEADER	STRESS GROUP	LIAISON ENGRG	PROJ ENGRG

PRIORITY: C
DRAWING TITLE: NOTED *
DRAWING NO.: LEO280
EO NO.: 830

010968
ISSUED BY DON RAGAS / P. THORJUSEN SECTION V.D.I. x 1153 GROUP NO. 335 PL 25

01 NAS 9-1100

LDW280-51826

MODEL OR END ITEM	NEXT ASSY	MODULE OR SER NO.	REQD PER MODULE OR END ITEM
LM	LDW280-28665	LM-15(45)	1EA
		LM-14 (44)	
		LM-13(43)	
		LM 12(42)	
		LM-11 (41	
		LM-10(40)	
		LM-9(39)	
		LM-8(38	
		LM-7(37)	
		LM-6(36)	
		LM-5(35)	
		LM-4(34)	
		LM-3(33)	
		LM-2(32)	
LM	LDW280-28665	LM-1(31)	1EA

PART NO. LDW280-51826-1 & -3

GAEC SCH NO. 501

2

SH REV STATUS: FOR DESCRIPTION OF REV SEE SUBQ SH

SHEET	1.00								
REV									
SHEET	2.00								
REV									
SHEET	3.00								
REV									

LAST SECT LTR USED C

LAST DASH NO. USED -3

GRUMMAN REL INFO

PRIM NO.	E(001)		EMF
207	MP-14	11-9-6	

UNLESS OTHERWISE SPECIFIED DIMENSIONS ARE IN INCHES.
TOLERANCE UNLESS SPECIFIED FRACTIONS - DECIMALS - ANGLES
± 1/8 ±.030 ± 1/2°
ORIG DWG AUTH
DETAIL SPEC REQUIREMENT
CLASS II ENGRG CHANGE
CLASS I ENGRG CHANGE

CONTRACT NO. NAS 9-1100
LINE ITEM NO. 1
DOCUMENTATION TYPE II

DRAWN BY	F. MADDEN	RELIAB	
LAYOUT BY	F.MADDEN	THERMO	MSchr 11/15/66
CHECKED BY			
GRP. LDR	10/14/66		
VEH. DES			
STRUCT	FS 11/8/66	PROJ ENGR	11-8-66
STRUCT		REL GROUP	11/9/66.
WEIGHTS			

GRUMMAN AIRCRAFT ENGRG CORP
BETHPAGE, L. I., NEW YORK

SHIELD ASSY~DESCENT STAGE QUAD II~PLUME IMPINGEMENT~VALVE PROTECTION

SIZE B
CODE IDENT NO. 26512
LDW280-51826
SCALE NONE
SHEET 1 OF 3

ENG 77 1 12-65

CDR 10-21-66

01

NAS 9-1100

CL					-3	-1	CODE IDENT	PART NO.	I&T	NOMENCLATURE OR DESCRIPTION	MATERIAL	GOVT SPEC	COML SPEC	STOCK SIZE	PROCESS SYM	FINISH NO.	ZONE
					5	5		LDW280-17932-13	E	WASHER	SEE DWG						
					5	5		LDW280-23720-3		STAPLE ASSY							
					2			LDW280-51825-3		FOIL ASSY							
						2		LDW280-51825-1		FOIL ASSY							
					1			LDW280-51824-3		SKIN ASSY							
						1		LDW280-51824-1		SKIN ASSY	SEE DWG						
								LDW280-51826-3		SHIELD ASSY					NONE	NONE	
								LDW280-51826-1	E	SHIELD ASSY					NONE	NONE	
▨	QTY PER ASSEMBLY																

CL: CLEANLINESS LEVEL PER LSP 14-0011

SYM OR NO.	PROCESS OR FINISH	GRUMMAN SPEC OR MILITARY SPEC	SYM OR NO.	PROCESS OR FINISH	GRUMMAN SPEC OR MILITARY SPEC	SYM OR NO.	PROCESS OR FINISH	GRUMMAN SPEC OR MILITARY SPEC

I & T: IDENTIFICATION AND TRACEABILITY IN ACCORDANCE WITH : NONE

GRUMMAN AIRCRAFT ENGRG CORP, BETHPAGE, L. I., NEW YORK

SIZE	CODE IDENT NO.	
B	26512	LDW280-51826

SCALE NONE

SHEET 2.00

ENG 77.2 7-65

01 NAS 9-1100

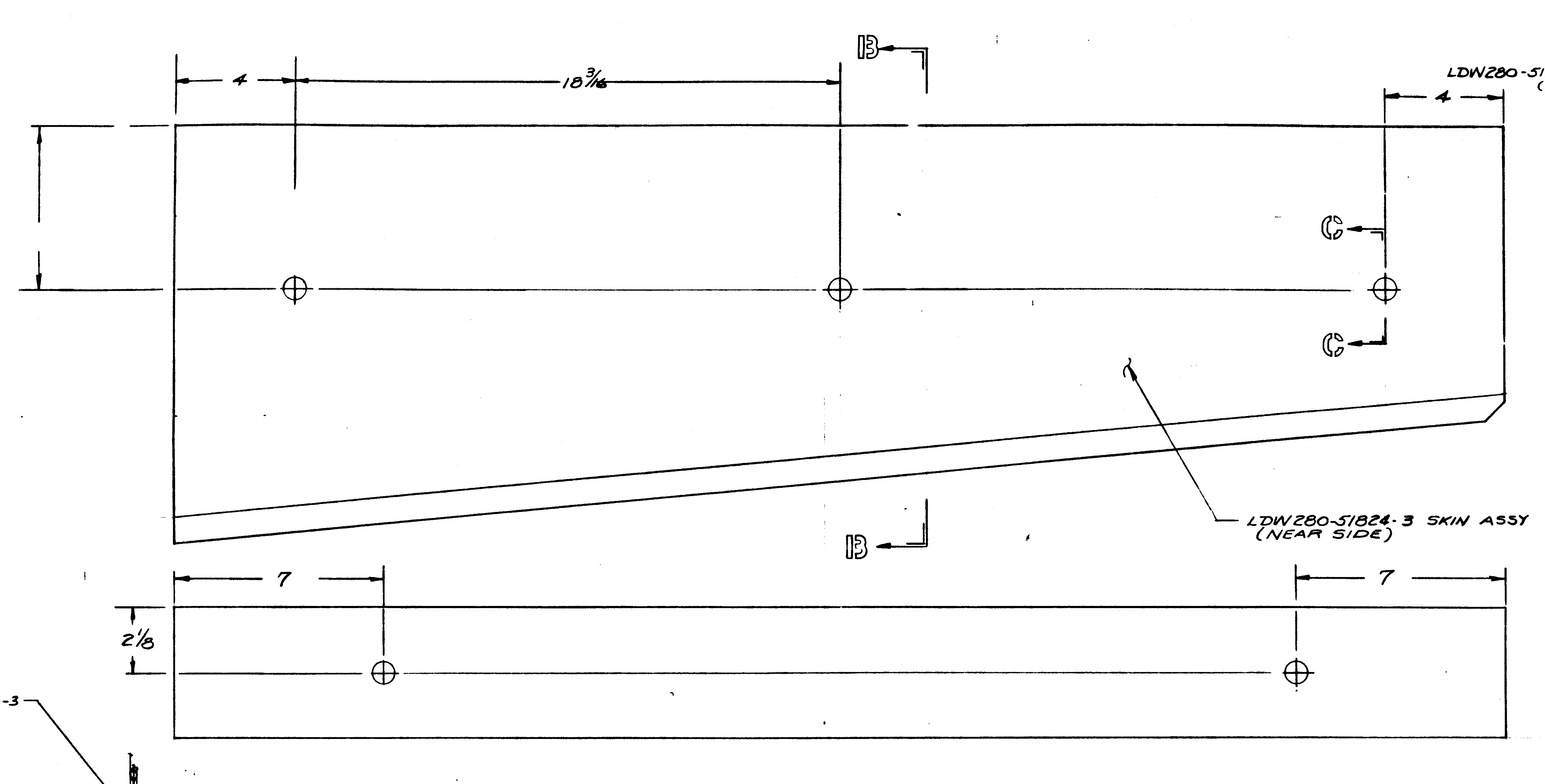

LDW280-51826-3 ASSY

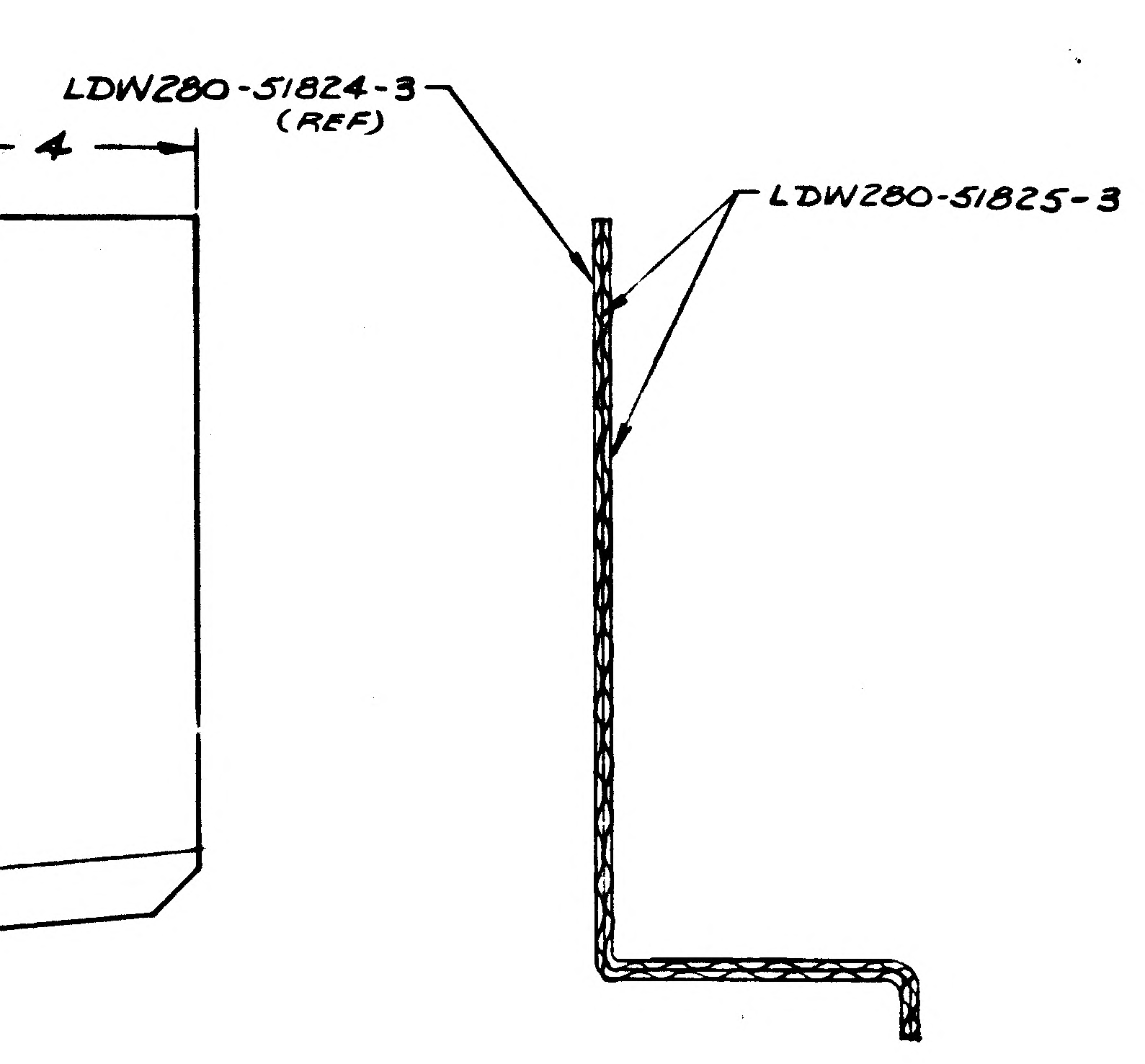

SECTION B-B

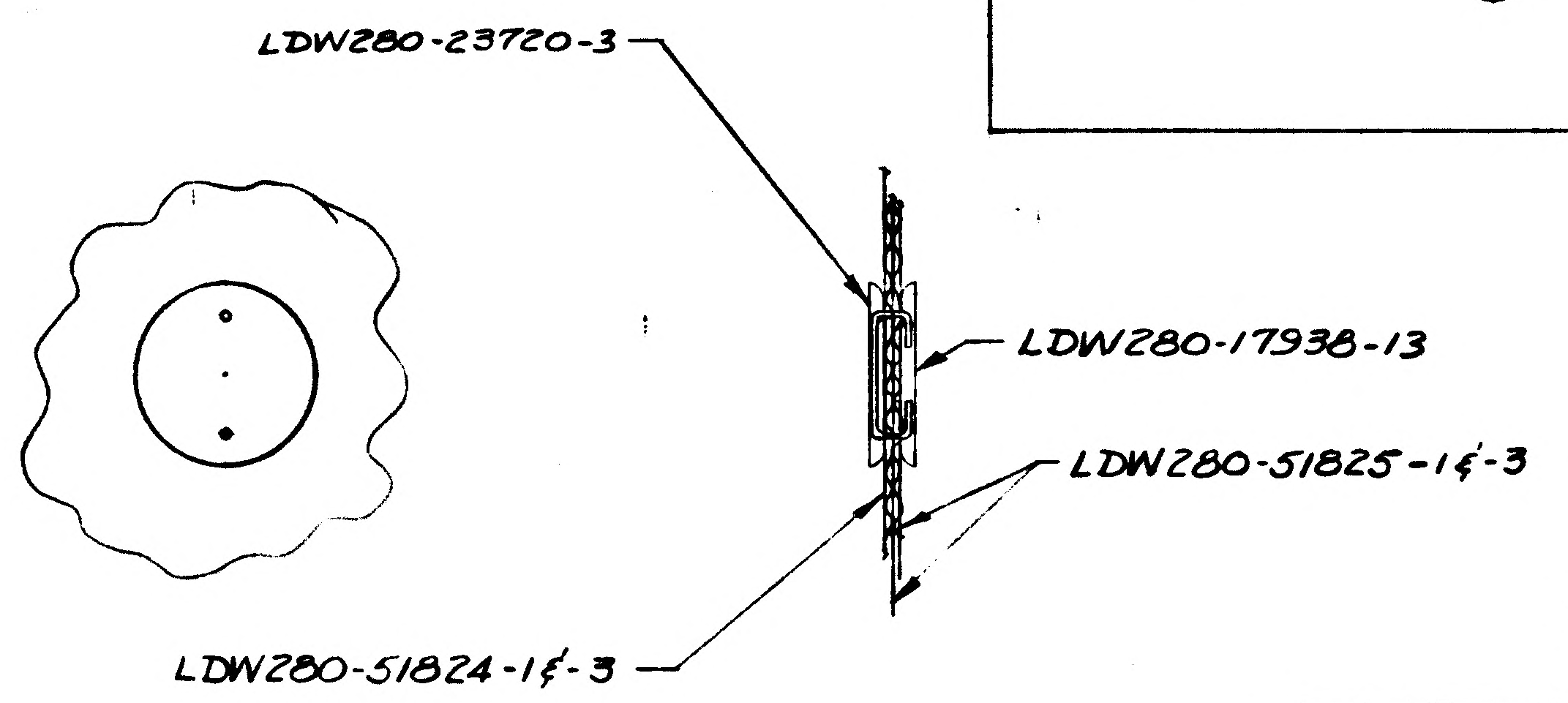

SECTION C-C
NO SCALE

SQUEEZE SKIN ASSY & BOTH FOILS ASSY'S TOGETHER & CLINCH STAPLE AS SHOWN (TYP 10 PLCS)

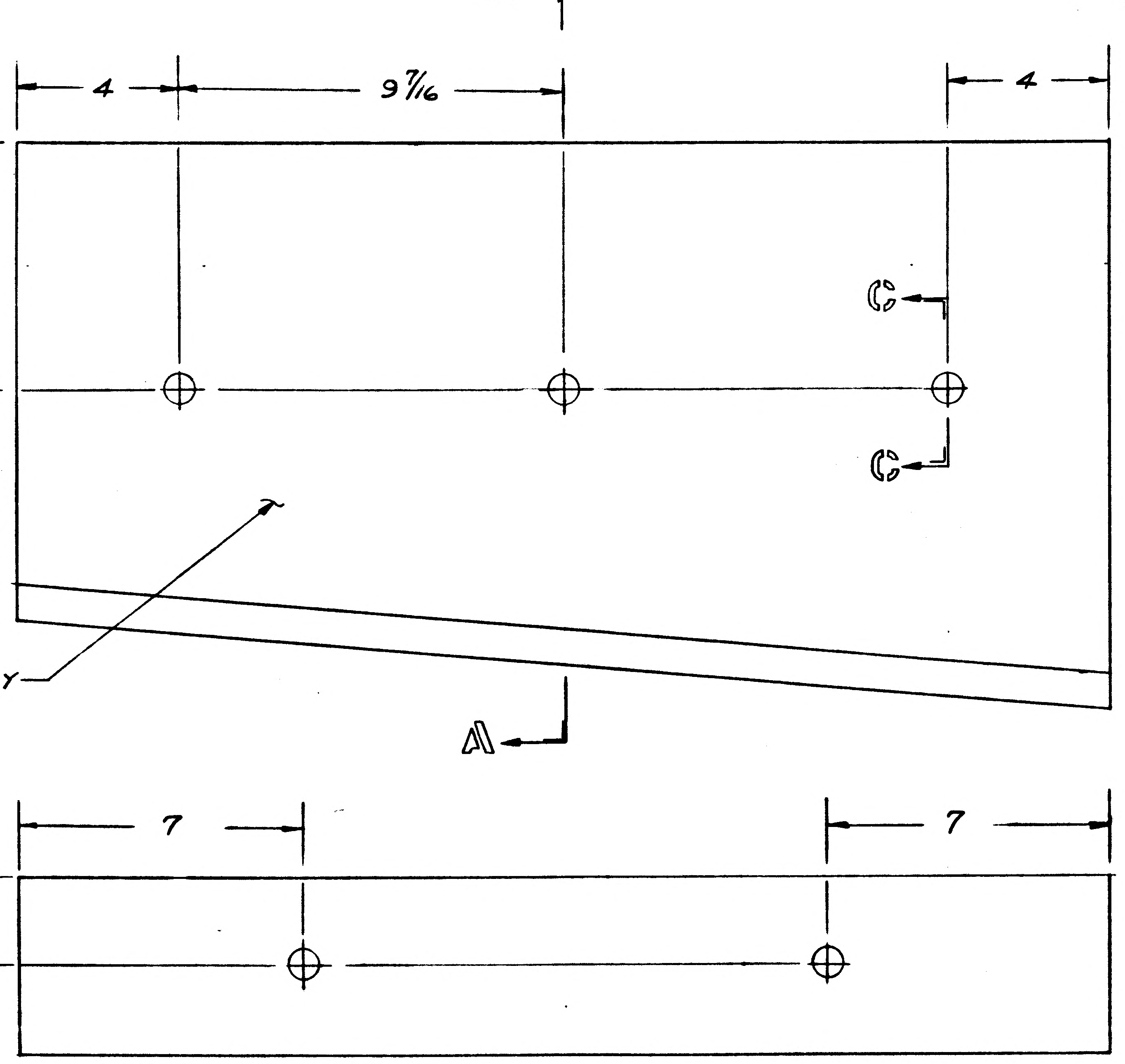

LDW280-51824-3 SKIN ASSY
(NEAR SIDE)

LDW280-51826-1 ASSY

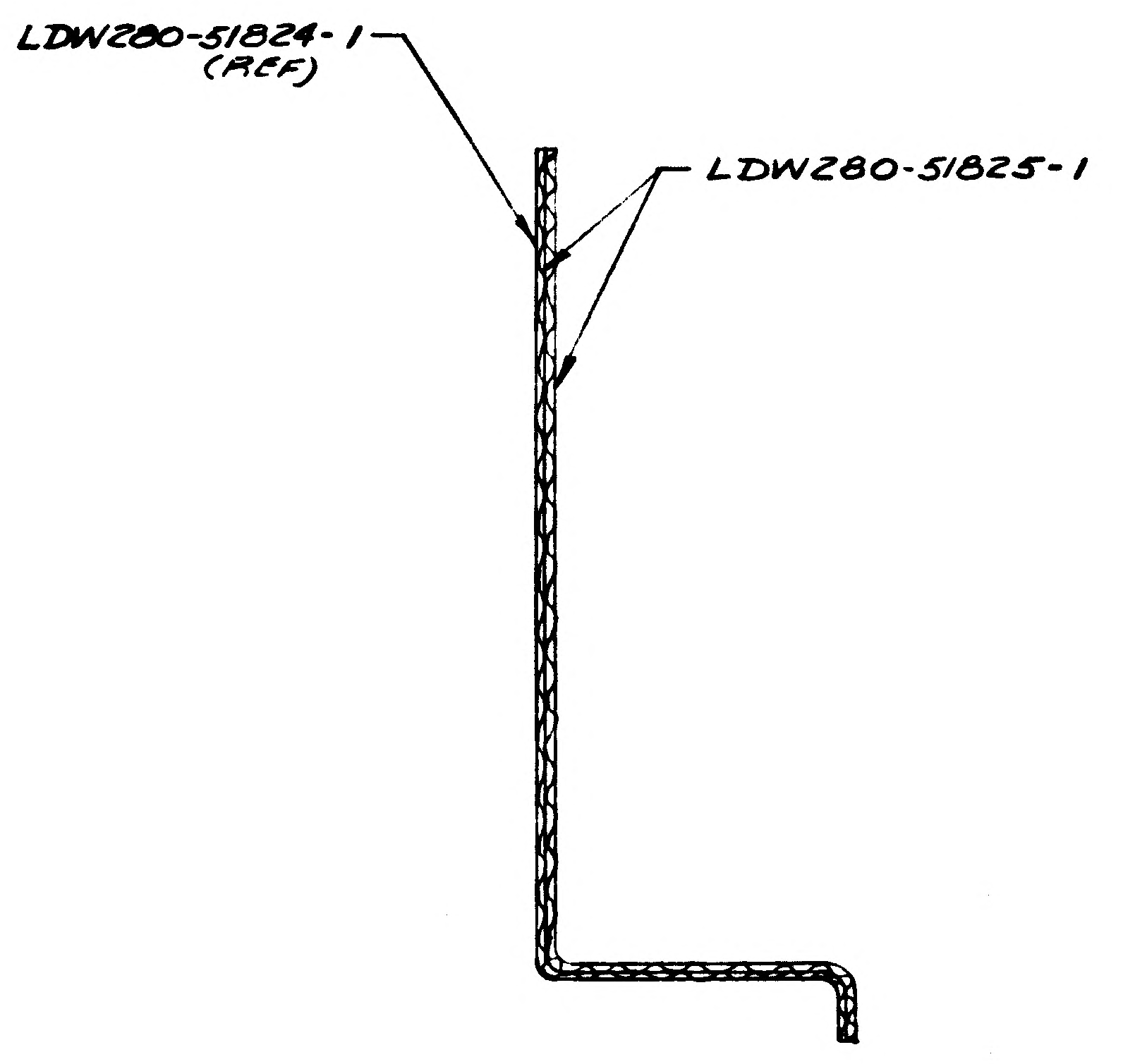

SECTION A-A

NOTES

1. NO TOOLING HOLES PERMITTED IN PARTS
2. FABRICATION OF LDW280-51826-1&-3 TO BE DONE UNDER CONDITIONS WHICH CONFORM TO LSP14-0011 LEVEL "C"
3. SQUEEZE FOILS & SKIN FIRMLY TOGETHER & CLINCH STAPLE AS SHOWN

NAS 9-1100

LAYOUT RELEASE MAY BE REDRAWN ON PRODUCTION FORMAT

MANUFACTURING OPERATIONS UNLESS OTHERWISE SPECIFIED NOTES CHECKED ✓ APPLY TO THIS DWG.	
PART NUMBER AND ALL OTHER MARKINGS IN REGION MARKED ⊠ USE BOTH SIDES IF NECESSARY.	
FILLET AND INSIDE CORNER RADII TOLERANCES .016R TO .062R ± .010 .063R TO .250R ± .015 OVER .250R ± .030	
DEPTH SHOWN FOR TAPPED HOLES IS FULL THDS. 2-3 IMP. THDS. BEYOND PERMISSIBLE	
EXTERNAL THREAD LENGTH SHOWN INCLUDES 2 IMPERFECT THREADS MAX.	
DO NOT CADMIUM PLATE & PAINT HOLES OR SURFACES MARKED WITH DOUBLE ASTERISK	
MISMATCH STEP OF ± .005 PERMISSIBLE DUE TO CHANGE OF CUTTERS AT INSIDE INTERSECTING SURFACES.	
DIAMETERS MARKED MUST BE CONCENTRIC WITHIN FULL INDICATOR READING	
HOLES MUST BE KEPT FREE OF CHROME PLATING SOLUTION.	
ALL DIMENSIONS SHOWN TO BE MET AFTER CADMIUM PLATING THICKNESS OF PLATE .0003 MIN TO .0005 MAX. MIN THICKNESS TO BE .0002 ON THREADED AREAS. NO ALLOWANCES FOR PLATING IN HOLES	
125 √ SURFACE ROUGHNESS INCLUDING REAMED HOLES PER MIL STD-10	
200 √ FOR ALL DRILLED HOLES	
REMOVE ALL BURRS. BREAK ALL EDGES .015-.031	
INSPECTION INFORMATION MINIMUM PERMISSIBLE AVERAGE EDGE DISTANCE MARKED IS	
SYMBOL √ DENOTES SURFACE TO BE MACHINED	
UNLESS OTHERWISE SPECIFIED TOLERANCE ON FLANGES IS ± 1/32	
LENGTHS OF AN, NAS & MS AL ALY RIVETS SHORTER THAN 1 INCH ARE NOT SPECIFIED	
TOLERANCE ON LOFTED DELINEATIONS IS	

	GRUMMAN AIRCRAFT ENGRG CORP. BETHPAGE, L. I., NEW YORK		
LM	SIZE E	CODE IDENT NO. 26512	LDW280-51826
MODEL OR END ITEM	SCALE 1/2		SHEET 3.00

LDW280-51826

LDW280-51826

H:G

ENG 32.1 REV 3-65

GRUMMAN AIRCRAFT ENGINEERING CORP.
CODE IDENT NO. 26512
ENGINEERING ORDER

DWG. NO. LDW280-51826
EO NO. A-1
CONTROL INFO NO. LM-2-3027

IN F/D. ON -3 ADD DIMENSION TO AGREE WITH E.O.

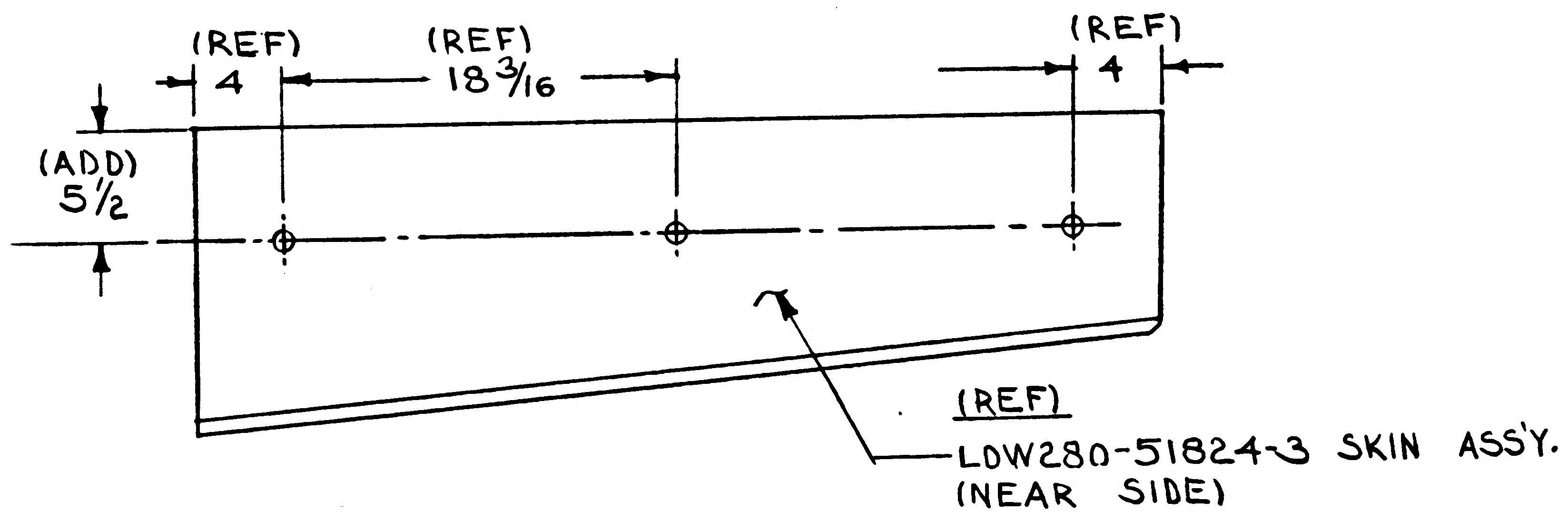

DETAIL SPEC REQ	☐	CL II ENGRG CHG	☐	CL I ENGRG CHG	☐

REASON FOR EO: INSUFFICIENT DIMENSIONING

DESCRIPTION OF EO: ON-3 ADDED: 5½ DIMENSION

GAEC EO RELEASE: ✓ LE

MODEL	EFFECTIVITY		
	PROCURING ACTIVITY NO.	GAEC UNIT NO.	SUB CONTR UNIT NO.
LM		LM-1 (31)	
		THRU	
		LM-15 (45)	

DRAWING CHANGE REQD		DISPOSITION OF PARTS										
				APPROVED BY	JAS				caw	caw	RWC (EO)	
✓		✓		DATE	12/15				11/21/66	11/21/66	11-22-66	11/25/66
REVISE DWG	RECORD EO	REWORK	SCRAP	-1-	VDI	SUPPORT	RELIAB. GROUP	~~GROUP LEADER~~	STRESS GROUP	LIAISON ENGRG	PROJ ENGRG	

PRIORITY: C

DRAWING TITLE: SHIELD ASSY.~DESCENT STAGE QUAD II~PLUME IMPINGEMENT

DRAWING NO.: LDW280-51826

EO NO.: A-1

ISSUED BY LIAISON T.J.MARTIN X3604 SECTION V.D.I. GROUP NO. 335 PL 35

01

NAS 9-1100

ENG 32.1 REV 3-65

GRUMMAN AIRCRAFT ENGINEERING CORP.
CODE IDENT NO. 26512
ENGINEERING ORDER

* DWG. NO. LE0280 EO NO. 707
CONTROL INFO NO. LDW280A9003

IN M/B FOR THE FOLLOWING PART NO's RESTRICT FOR USE ON LM-1 & LM-2

DWG. No *	TITLE	CHG. LTR
✓ LDW280-51824-1&-3	SEE	A4
✓ LDW280-51825-1&-3	DWG	A3
✓ LDW280-51826-1&-3		A2

DETAIL SPEC REQ	☐	CL II ENGRG CHG	☐	CL I ENGRG CHG	✓	LCD 1244

3

REASON FOR EO: PROVISION FOR FITH SHIELD

DESCRIPTION OF EO: RESTRKTED * FOR USE ON LM-1 & LM-2 WAS USED ON LM-1 THRU LM-15

Ⓡ GAEC C EO RELEASE 9/9/67

MODEL	PROCURING ACTIVITY NO.	GAEC UNIT NO.	SUB CONTR UNIT NO.
LM		LM 3(33) THRU	LM-15(45)

DRAWING CHANGE REQD		DISPOSITION OF PARTS	
✓			✓
REVISE DWG	RECORD EO	REWORK	SCRAP

APPROVED BY							
DATE	9/7			9/7/67	9/8/67		9/3	9-9-67
	VDI	SUPPORT	RELIAB. GROUP	GROUP LEADER	STRESS GROUP	LIAISON ENGRG	PROJ ENGRG	~~GOVT~~

PRIORITY	DRAWING TITLE	DRAWING NO.	EO NO.
C	NOTED	LE0280	707

9-8-67
ISSUED BY G. ZEMAN / J. STRAROSCH SECTION VDI GROUP NO. 335 PL 25

01

NAS 9-1100

GRUMMAN AIRCRAFT ENGINEERING CORP.
CODE IDENT NO. 26512
ENGINEERING ORDER

ENG 32.1 REV 3-65

DWG. NO. LDW280-51826	EO NO. A3
CONTROL INFO NO. LDW280B0043	

IN MOD/BLK
ON-1 & -3 SHIELD ASSY ADD EFF LDW 420-2370 SER. #1 (4) REQ'D EACH.
N/A LDW280P51123

LFM

DETAIL SPEC REQ	☐	CL II ENGRG CHG	☐	CL I ENGRG CHG	☑ LCD 2193

5

REASON FOR EO	DESCRIPTION OF EO	GAEC C EO RELEASE
ADDITIONAL F.I.T.H. SHIELD TEST REQUIREMENTS	ON-1 & -3 ADDED EFF LDW420-2370 SER #1 (4) REQ'D EACH & N/A LDW280P51123	JK 10/31/7

MODEL	EFFECTIVITY E.I. ~~PROCURING ACTIVITY NO.~~	GAEC UNIT NO.	SUB CONTR UNIT NO.
LM	LFM 420-	2370-001	
LM	LDW420-	2370 SER #1	

DRAWING CHANGE REQD		DISPOSITION OF PARTS	
✓		NOT REQ'D	
REVISE DWG	RECORD EO	REWORK	SCRAP

APPROVED BY				PSX				
DATE	10/27	10/27		10-27-67	10/27/67	10/30/67	10/31/67	10-31-67
—	V.D.I.	THER. ~~SUPPORT~~	RELIAB. GROUP	GROUP LEADER	STRESS GROUP	LM STRS ENGRG	PROJ ENGRG	

PRIORITY	DRAWING TITLE	DRAWING NO.	EO NO.
C	SHIELD ASSY ~ D/S QUAD II ~ PLUME IMPINGEMENT VALVE PROTECT	LDW280-51826	A3

ISSUED BY DON THOMAS / P. THORJUSEN SECTION V.D.I. x 1153 GROUP NO. 335 PL 25
11-3-67

01

NAS 9-1100

ENG 32.1 REV 3-65

GRUMMAN AIRCRAFT ENGINEERING CORP.
CODE IDENT NO. 26512
ENGINEERING ORDER

DWG. NO. LEO 280
EO NO. 792
CONTROL INFO NO. LDW 280 B0290

IN M/B:
FOR THE FOLLOWING DWGS (*ALL DASH NO'S INVOLVED) REVISE LFM NO AS
SHN • LFM 420-2370-004 WAS LFM 420-2370-001

DWG.	+ NO.	TITLE	CHANGE NO
LTM280P15300	*	SEE DWG	A1
LDW280-51564	*	SEE DWG	A5
LDW280-51826	*	SEE DWG	A4
LDW280-51824	*	SEE DWG	A6
LDW280-51825	*	SEE DWG	A5
LDW280P51123	*	SEE DWG.	B2

DETAIL SPEC REQ ☐ CL II ENGRG CHG ☐ CL I ENGRG CHG ☑ LCD 2193 (5)

REASON FOR EO: CORRECTION OF LFM NO' PER LCD 2193 "E" REV

DESCRIPTION OF EO: IN MOD BLK FOR* LFM 420-2370-004 WAS LFM 420-2370-001

GAEC EO RELEASE: C JK 11/8/7

MODEL	EFFECTIVITY: ET ~~PROCURING ACTIVITY NO.~~	GAEC UNIT NO.	SUB CONTR UNIT NO.
LM	LDW 420-2370 SN#1		
LM	LFM 420-2370-004		

DRAWING CHANGE REQD: REVISE DWG ✓ RECORD EO
DISPOSITION OF PARTS: NOT REWORK REQD SCRAP

APPROVED BY		SUPPORT	RELIAB. GROUP	GROUP LEADER	STRESS GROUP	LIAISON ENGRG	PROJ ENGRG	
DATE	11/3/67			11-3-67	11/3/67		11/3/67	11-7-67
——	VDI							

PRIORITY: C
DRAWING TITLE: NOTED
DRAWING NO. LEO 280
EO NO. 792

11667
ISSUED BY DON RAGAS X1153 SECTION VDI GROUP NO. 335 PL 25

01

NAS 9-1100

ENG 32.1 REV 3-65

GRUMMAN AIRCRAFT ENGINEERING CORP.
CODE IDENT NO. 26512
ENGINEERING ORDER

DWG. NO. LDW280-51826
EO NO. A5
CONTROL INFO NO. LDW280B1026

IN MOD/BLK

FOR-1 & -3 SHIELD ASSY N/A LDW280P51123 (5) REQ'D EACH WAS (4).

LFM

DETAIL SPEC REQ ☐ CL II ENGRG CHG ☐ CL I ENGRG CHG ✓ LCD 2193 (5)

REASON FOR EO: ADDITIONAL TEST REQUIREMENTS

DESCRIPTION OF EO: IN MOD/BLK ON-1 & -3 (5) REQ'D EACH WAS (4) REQ'D EA ON N/A LDW 280P51123

GAEC EO RELEASE

MODEL	E.I. ~~PROCURING ACTIVITY~~ NO.	EFFECTIVITY S/N ~~GAEC UNIT NO.~~	SUB CONTR UNIT NO.
LM	LFM 420-	2370-004	
LM	LDW 420-	2370 SER	#1

DRAWING CHANGE REQD		DISPOSITION OF PARTS		APPROVED BY								
✓		NOT	REQ'D	DATE	1/2/68			1-2-68	1-2-68		1/2/68	1-3-68
REVISE DWG	RECORD EO	REWORK	SCRAP	——→	VDI	SUPPORT	RELIAB. GROUP	GROUP LEADER	STRESS GROUP	LIAISON ENGRG	PROJ ENGRG	~~GOVT~~

Group leader: PJT; Stress group: NM

PRIORITY: C
DRAWING TITLE: SHIELD ASSY ~ D/S QUAD II ~ PLUME IMPINGEMENT VALVE PROT.
DRAWING NO.: LDW 280-51826
EO NO.: A5

01-04-68
ISSUED BY DON THOMAS / P. THORJUSEN SECTION V.D.I. x1153 GROUP NO. 335 PL 25

0 1

NAS 9-1100

C

ENG 32.1 REV 3-65

GRUMMAN AIRCRAFT ENGINEERING CORP.
CODE IDENT NO. 26512
ENGINEERING ORDER

DWG. NO. LEO280 | EO NO. 830
CONTROL INFO NO. LDW280B1124

ON THE FOLLOWING DRAWINGS CANCEL EO'S AS NOTED BELOW.

DRAWING NO.	TITLE	CANCEL EO *	CANCELLING CHANGE #
✓ LDW280P51123	BLANKET INSTL	B5	B6
✓ LDW280-51564	SKIN ASSY FENCE	A6	A7
✓ LDW280-51824	SKIN ASSY	A7	A8
✓ LDW280-51825	FOIL ASSY	A6	A7
✓ LDW280-51826	SHIELD ASSY	A5	A6
LTM280P15300	BLANKET ASSY	A2	A3

LFM

(5)

DETAIL SPEC REQ ☐ | CL II ENGRG CHG ☐ | CL I ENGRG CHG ☐ | ✓ LCD 2193 | PKG 2

REASON FOR EO: CANCELLATION OF ADDITIONAL TEST REQUIREMENTS

DESCRIPTION OF EO: CANCELLED EO * AND ADDITIONAL QTY REQMT CREATED THEREON

GAEC EO RELEASE: JK 1/9/8

MODEL	~~PROCURING~~ ACTIVITY NO. (E I)	~~GAEC UNIT NO.~~ (EFFECTIVITY S/N)	SUB CONTR UNIT NO.
LM	LFM 420-	2370-004	
LM	LDW 420-	2370 SER	#1

DRAWING CHANGE REQD		DISPOSITION OF PARTS									
✓			✓	APPROVED BY	JaP			PBt	WJA	JaP	Batti
REVISE DWG	RECORD EO	REWORK	SCRAP	DATE	1/6/68			1-6-68	1/8/68	1/6/68	1-9-68
					V.D.I.	SUPPORT	RELIAB. GROUP	GROUP LEADER	STRESS GROUP	LIAISON ENGRG	PROJ ENGRG

PRIORITY: C
DRAWING TITLE: NOTED *
DRAWING NO.: LEO280
EO NO.: 830

010968
ISSUED BY DON RAGAS / P. THORJUSEN SECTION V.D.I. x 1153 GROUP NO. 335 PL 25

01

NAS 9-1100

LDW280-51829

MODEL OR END ITEM	NEXT ASSY	MODULE OR SER NO.	REQD PER MODULE OR END ITEM
LM	LDW280-51831	LM-15(45)	1
		LM-14(44)	1
		LM-13(43)	1
		LM-12(42)	1
		LM-11(41)	1
		LM-10(40)	1
		LM-9(39)	1
		LM-8(38)	1
		LM-7(37)	1
		LM-6(36)	1
		LM-5(35)	1
		LM-4(34)	1
		LM-3(33)	1
		LM-2(32)	1
LM	LDW280-51831	LM-1(31)	1
PART NO. LDW 280-51829-1		GAEC SCH NO. 52	

2

SH REV STATUS: FOR DESCRIPTION OF REV SEE SUBQ SH										
SHEET	1.00		2.00	3.00						
REV										
SHEET										
REV										
SHEET										
REV										

LAST SECT LTR USED		GRUMMAN REL INFO			
		PRIM NO.	VE(001)		
LAST DASH NO. USED	-1	220	MP-14	11-15-6	

UNLESS OTHERWISE SPECIFIED DIMENSIONS ARE IN INCHES.
TOLERANCE UNLESS SPECIFIED
FRACTIONS - DECIMALS – ANGLES
± 1/32 ± .030 ± 1/2°

ORIG DWG AUTH
DETAIL SPEC REQUIREMENT
CLASS II ENGRG CHANGE
CLASS I ENGRG CHANGE

CONTRACT NO. NAS9-1100
LINE ITEM # 1
DOCUMENTATION TYPE II

DRAWN BY	J. Backofen 11/7/66		
LAYOUT BY	J. BACKOFEN	THERMO	M. Solon 11/1/66
CHECKED BY			
GR LEADER	11/2/66		
VEH DES I	11/9/66		
STRUCT.	NM 11/1	PROJ ENGR	R.M. Carbee 11-12
STRUCT.		REL GROUP	11/14/66

GRUMMAN AIRCRAFT ENGRG CORP
BETHPAGE, L. I., NEW YORK

SKIN - DESCENT STAGE -
QUAD IV GUILLOTINE
ACCESS COVER

SIZE	CODE IDENT NO.	
B	26512	LDW280-51829
SCALE NONE		SHEET 1.00 OF 3

ENG 77 1 12-65

C.D.R. = 11/7/66

01

NAS 9-1100

C.L.	QTY PER ASSEMBLY					-1	CODE IDENT	PART NO.	I&T	NOMENCLATURE OR DESCRIPTION	MATERIAL	GOVT SPEC	COML SPEC	STOCK SIZE	PROCESS SYM	FINISH NO.	ZONE
						1		GT15B-7	E	TAPE	GRUMMAN STD.						
						1		GT15B-4		TAPE	GRUMMAN STD.						
						1		LDW280-18169-15		SKIN	SEE DWG						
						1		LDW280-18169-13		SKIN							
						1		LDW280-18169-11		COVER	SEE DWG						
C								LDW280-51829-1	E	SKIN ASS'Y					FLW	SEE NOTE	

C.L. = CLEANLINESS LEVEL PER LSP14-0011

SYM OR NO.	PROCESS OR FINISH	GRUMMAN SPEC OR MILITARY SPEC	SYM OR NO.	PROCESS OR FINISH	GRUMMAN SPEC OR MILITARY SPEC	SYM OR NO.	PROCESS OR FINISH	GRUMMAN SPEC OR MILITARY SPEC
						FLW	RESISTANCE WELD	LSP14-6102

I & T: IDENTIFICATION AND TRACEABILITY IN ACCORDANCE WITH : NONE

GRUMMAN AIRCRAFT ENGRG CORP, BETHPAGE, L. I., NEW YORK

SIZE	CODE IDENT NO.	
B	26512	LDW280-51829

SCALE NONE

SHEET 2.00

ENG 77.2 7-65

01

NAS 9-1100

LDW280-51829

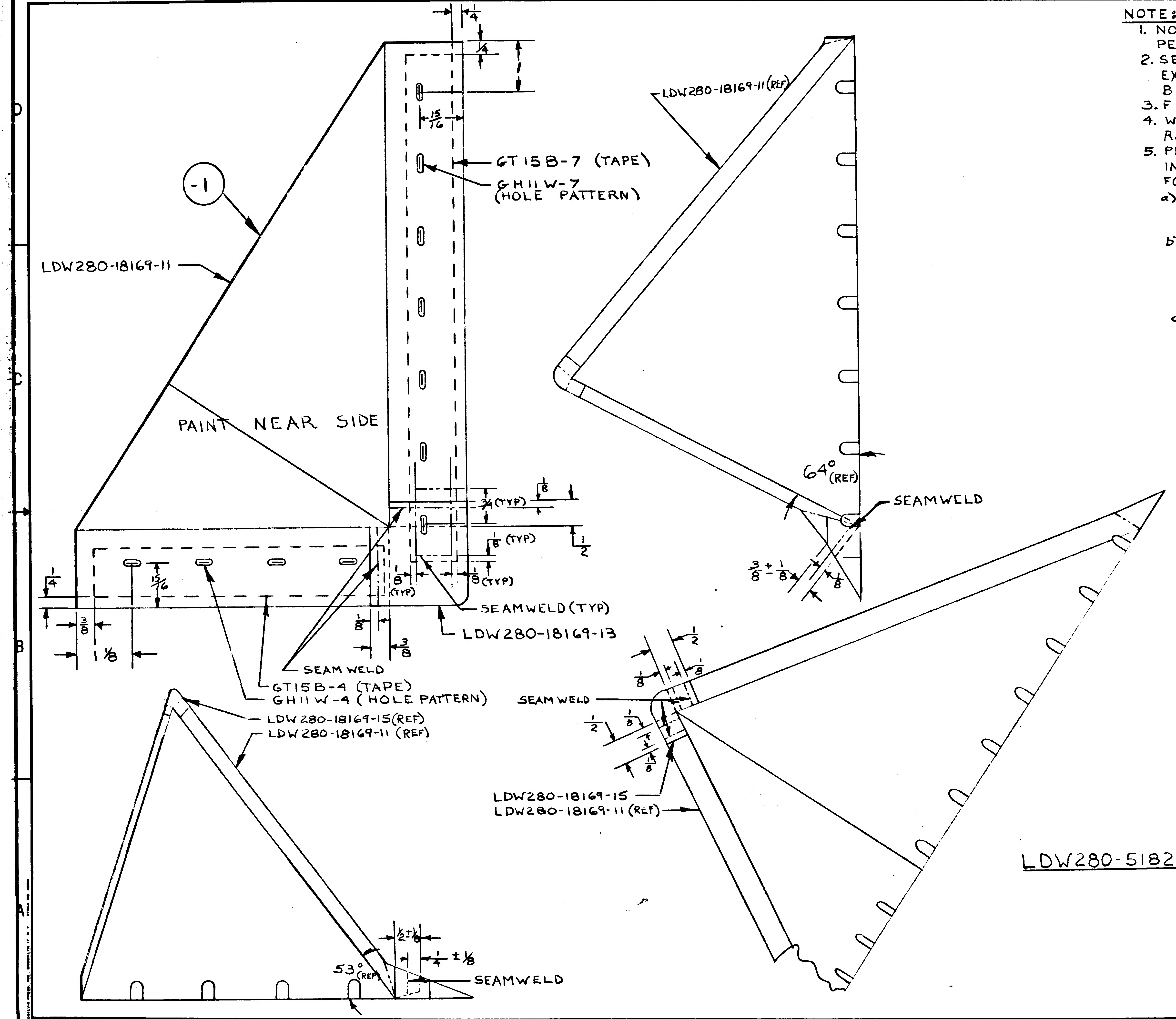

-1
LDW280-18169-11
PAINT NEAR SIDE
GT15B-7 (TAPE)
GH11W-7 (HOLE PATTERN)
15/16
1/4
3/4 (TYP)
1/8 (TYP)
1/2
1/8 (TYP)
3/8
1 1/8
SEAMWELD (TYP)
LDW280-18169-13
SEAM WELD
GT15B-4 (TAPE)
GH11W-4 (HOLE PATTERN)
LDW280-18169-15 (REF)
LDW280-18169-11 (REF)
53° (REF)
1/2 ± 1/8
1/4 ± 1/8
SEAMWELD
LDW280-18169-11 (REF)
64° (REF)
SEAMWELD
3/8 ± 1/8
SEAM WELD
LDW280-18169-15
LDW280-18169-11 (REF)

NOTE:

1. NO TOOLING HOLES PERMITTED IN PARTS.
2. SEAMWELD PER LSP 14-6102, EXCEPT THAT SPOTS SHALL BE TANGENT +1/32 - 0.
3. FINISH PER LPC 280-5.
4. WELDED ASS'YS MAY HAVE RANDOM WRINKLED APPEARANCE
5. PERMISSIBLE IRREGULARITIES IN WELDED ASS'YS ARE AS FOLLOWS:
   a) HOLES IN THE SEAMWELD ROWS UP TO 1/8 MAX & AT LEAST 1' APART.
   b) CRACKS IN THE FREE EDGE OF WELDED JOINTS NO CLOSER TOGETHER THAN 1/8" & NOT EXTENDING PAST THE WELD LINE.
   c) IRREGULARITIES IN EXCESS OF THE LIMITATIONS OF (a) & (b) ARE TO BE COVERED WITH A PATCH, THE PATCH SHALL BE OF THE SAME MATERIAL AND THICKNESS AS THE BASIC SKIN BUT SHALL NOT EXCEED A BASIC AREA OF 4 SQ. IN. AND SHALL NOT HAVE A MAXIMUM DIMENSION OF GREATER THAN 5 IN. THE PATCH SHALL BE WELDED (SEAM) AROUND THE ENTIRE PERIPHERY.

MANUFACTURING OPERATIONS UNLESS OTHERWISE SPECIFIED NOTES CHECKED ✓ APPLY TO THIS DWG.	
PART NUMBER AND ALL OTHER MARKINGS IN REGION MARKED ⊠ USE BOTH SIDES IF NECESSARY.	
FILLET AND INSIDE CORNER RADII TOLERANCES .016R TO .062R ± .010 .063R TO .250R ± .015 OVER .250R ± .030	
DEPTH SHOWN FOR TAPPED HOLES IS FULL THDS. 2-3 IMP. THDS. BEYOND PERMISSIBLE	
EXTERNAL THREAD LENGTH SHOWN INCLUDES 2 IMPERFECT THREADS MAX.	
DO NOT CADMIUM PLATE & PAINT HOLES OR SURFACES MARKED WITH DOUBLE ASTERISK.	
MISMATCH STEP OF ± .005 PERMISSIBLE DUE TO CHANGE OF CUTTERS AT INSIDE INTERSECTING SURFACES.	
DIAMETERS MARKED MUST BE CONCENTRIC WITHIN FULL INDICATOR READING	
HOLES MUST BE KEPT FREE OF CHROME PLATING SOLUTION.	
ALL DIMENSIONS SHOWN TO BE MET AFTER CADMIUM PLATING. THICKNESS OF PLATE .0003 MIN TO .0005 MAX. MIN THICKNESS TO BE .0002 ON THREADED AREAS. NO ALLOWANCES FOR PLATING IN HOLES	
125 √ SURFACE ROUGHNESS INCLUDING REAMED HOLES PER MIL-STD-10	
200 √ FOR ALL DRILLED HOLES	
REMOVE ALL BURRS. BREAK ALL EDGES .015-.031	
INSPECTION INFORMATION MINIMUM PERMISSIBLE AVERAGE EDGE DISTANCE MARKED IS	
SYMBOL √ DENOTES SURFACE TO BE MACHINED	
UNLESS OTHERWISE SPECIFIED TOLERANCE ON FLANGES IS ± 1/32	
LENGTHS OF AN, NAS & MS AL ALY RIVETS SHORTER THAN 1 INCH ARE NOT SPECIFIED	
TOLERANCE ON LOFTED DELINEATIONS IS	

LDW280-51829-1 SKIN ASS'Y

LM	GRUMMAN AIRCRAFT ENGRG CORP. BETHPAGE, L. I., NEW YORK		
	SIZE D	CODE IDENT NO. 26512	LDW280-51829
MODEL OR END ITEM	SCALE FULL		SHEET 3 00

01 NAS 9-1100

ENG 32.2 REV 3-65

GRUMMAN AIRCRAFT ENGINEERING CORP.
CODE IDENT NO. 26512
ENGINEERING ORDER EMF-4

DWG. NO. LEO 280
EO NO. 421
CONTROL INFO NO. LDW280A-4411

ON THE FOLLOWING DRAWINGS ADD NOTE *

DRAWING NO.	EFF	CHANGE NUMBER	TITLE
			SEE DWG
LDW280-28730	LTA8 LM-1 THRU LM6	B 2	
LDW280-28734	"	A 8	
LDW280-28735	"	C 3	
LDW280-28796	LTA8(8) LM-1 (31) THRU LM-15(45)	B 3	
LDW280-28747	LTA8 (18) LM-1 (31) THRU LM-6(36)	B 1	
LDW280-28749	"	A 7	
LDW280-28750	"	B 3	
LDW280-28752	"	B 2	
LDW280-28753	"	A 3	
LDW280-28755	LTA 8 (18) LM-1 (31)	A 7	
LDW280-28756	LTA8(18) LM-1(31) THRU LM-15(45)	A 6	
LDW280-28759	LTA8(18) LM-1(31) THRU LM-6(36)	B 2	
LDW280-28760	"	B 1	
LDW280-28768	LM-1(31)	B 2	
LDW280-28769	LM-1(31)	B 1	
LDW280-28771	LTA8(18) LM-1(31) THRU LM-6(36)	B 2	
LDW280-28772	"	B 1	
LDW280-28774	"	A 7	
LDW280-28775	"	B 2	
LDW280-28803	"	A 2	
LDW280-28805	"	A 1	
LDW280-51824	LM-1(31) THRU LM-15(45)	A 1	
LDW280-51825	"	A 2	
LDW280-51829	"	A 1	
LDW280-51830	"	A 1	
LDW280-51834	"	A 1	SEE DWG

* MANUFACTURED PARTS TO COMPLY WITH REQUIREMENTS OF LPC 280-19

2

DETAIL SPEC REQ ☐ CL II ENGRG CHG ☐ CL I ENGRG CHG ☐

REASON FOR EO: LPC 280-19 PROVIDES COMPLETE FABRICATION AND INSPECTION INFO

DESCRIPTION OF EO: ADDED NOTE *

GAEC EO RELEASE: 12/20

MODEL	PROCURING ACTIVITY NO.	GAEC UNIT NO.	SUB CONTR UNIT NO.
LM		NOTED	

DRAWING CHANGE REQD: ✓ REVISE DWG / RECORD EO

DISPOSITION OF PARTS: NOT REWORK / REQ'D SCRAP

APPROVED BY									
DATE	12/16/66	12/16/66		12/19/66	12		12/20	12-20-66
1	VDI	~~SUPPORT~~ THERMO	RELIAB. GROUP	GROUP LEADER	STRESS GROUP	LIAISON ENGRG	PROJ ENGRG	~~GOVT~~

PRIORITY: C

DRAWING TITLE: NOTED

DRAWING NO. LEO 280

EO NO. 421

ISSUED BY T. AMBROSIO/STRAKOSCH X1153 SECTION VEH DES INT GROUP NO. 335 PL 35

01

NAS 9-1100

A

ENG 32.1 REV 3-65

GRUMMAN AIRCRAFT ENGINEERING CORP.

CODE IDENT NO. 26512

ENGINEERING ORDER

* EMF A

DWG. NO. LDW280-51829 EO NO. A2

CONTROL INFO NO. LDW280A-5744

IN FID & LM REMOVE -1 SKIN ASSY. ADD -3 SKIN ASSY IDENTICAL
TO -1 EXCEPT REMOVE ALL GT15B & GH11W - AND LDW280-18169-17
REPLACES LDW280-18169-11, LDW280-18169-19 REPLACES LDW280-18169-13
& LDW280-18169-21 REPLACES LDW280-18169-15
EFF FOR -3 LM-1(31) THRU LM-15(45) 1 REQD (REF)
N/A FOR -3 LDW280-51831 (REF)

DETAIL SPEC REQ ☐ CL II ENGRG CHG ☑ CL I ENGRG CHG ☐ 2

REASON FOR EO	DESCRIPTION OF EO	GAEC EO RELEASE
LCR928 IMPROVE PAINT ADHESION	REMOVED -1 ADDED -3	C JK 3/13/67

MODEL	EFFECTIVITY PROCURING ACTIVITY NO.	EFFECTIVITY GAEC UNIT NO.	EFFECTIVITY SUB CONTR UNIT NO.
LM		LM-1(31) THRU	LM-15(45)

DRAWING CHANGE REQD: REVISE DWG	DRAWING CHANGE REQD: RECORD EO	DISPOSITION OF PARTS: REWORK	DISPOSITION OF PARTS: SCRAP
✓			✓

	5	VD1	SUPPORT	RELIAB. GROUP	GROUP LEADER	STRESS GROUP	LIAISON ENGRG	PROJ ENGRG	GOVT
APPROVED BY						W/H			
DATE		3/6/67			3/11/67	3/11/67		3-11-67	3-13-67

PRIORITY	DRAWING TITLE	DRAWING NO.	EO NO.
C	SKIN ASSY DES STAGE QUAD IV GUILLOTINE COVER	LDW280-51829	A2

ISSUED BY G. ZEMAN / J. STRACKOSCH SECTION VD1 GROUP NO. 335 PL 35

01 NAS 9-1100

B

ENG 32.1 REV 3-65

GRUMMAN AIRCRAFT ENGINEERING CORP.
CODE IDENT NO. 26512
ENGINEERING ORDER

DWG. NO. LDW280-51829
EO NO. A3
CONTROL INFO NO. LDW280B0029

RESTRICT -3 TO LM-1 & LM-2
(WAS) LM-1 THRU LM-15

FITH

DETAIL SPEC REQ		CL II ENGRG CHG		CL I ENGRG CHG	✓ LCD 1244

~~8~~ ~~0~~ 5

REASON FOR EO: NEW SHIELD INSTL CREATED FOR LM-3 THRU LM-15

DESCRIPTION OF EO: RESTRICTED -3 TO LM-1 & LM-2 REMOVED LM-3 THRU LM-15 EFF.

GAEC EO RELEASE: JM 11/30/67

MODEL	PROCURING ACTIVITY NO.	GAEC UNIT NO.	SUB CONTR UNIT NO.
LM		LM-3 (33) THRU LM-15 (45)	

DRAWING CHANGE REQD: REVISE DWG ✓ / RECORD EO
DISPOSITION OF PARTS: REWORK / SCRAP ✓

APPROVED BY	Jaf			P.T. H	w/H		Jaf	Botti
DATE	11/29/67			11-29-67	11/29/67		11/29/67	11-29-67
P	VDI	THERMAL SUPPORT	RELIAB. GROUP	GROUP LEADER	STRESS GROUP	LIAISON ENGRG	PROJ ENGRG	

PRIORITY: C
DRAWING TITLE: SKIN-QUAD IV GUILLOTINE D/S ACCESS COVER
DRAWING NO.: LDW280-51829
EO NO.: A3

4.2 120167
ISSUED BY ROESSLER / THORJUSEN x1153 SECTION VDI GROUP NO. 335 PL 25

01

NAS 9-1100

LDW280-51830

MODEL OR END ITEM	NEXT ASSY	MODULE OR SER NO.	REQD PER MODULE OR END ITEM
L M	LDW280-51831	LM-15(45)	2
		LM-14(44)	2
		LM-13(43)	2
		LM-12(42)	2
		LM-11(41)	2
		LM-10(40)	2
		LM-9(39)	2
		LM-8(38)	2
		LM-7(37)	2
		LM-6(36)	2
		LM-5(35)	2
		LM-4(34)	2
		LM-3(33)	2
		LM-2(32)	2
L M	LDW280-51831	LM-1(31)	2
PART NO. LDW280-51830-1		GAEC SCH NO. 52	

2

SH REV STATUS: FOR DESCRIPTION OF REV SEE SUBQ SH				
SHEET	1.00		2.00	3.00
REV				
SHEET				
REV				
SHEET				
REV				

LAST SECT LTR USED

LAST DASH NO. USED -3

GRUMMAN REF INFO

PRIM NO. VE(001) EMF

220 MP-14 11-12-6

UNLESS OTHERWISE SPECIFIED DIMENSIONS ARE IN INCHES.
TOLERANCE UNLESS SPECIFIED
FRACTIONS - DECIMALS – ANGLES
± 1/32 ±.030 ± 1/2°

ORIG DWG AUTH
DETAIL SPEC REQUIREMENT
CLASS II ENGRG CHANGE
CLASS I ENGRG CHANGE

CONTRACT NO. NAS9-1100
LINE ITEM # 1
DOCUMENTATION TYPE II

DRAWN BY J. Backofen 11/8/66
LAYOUT BY J. BACKOFEN
CHECKED BY
GR LEADER 11/8/66
VEH DES INT J. Pusateri 11/9/66
STRUCT. NM 11/11
STRUCT.
WEIGHTS
RELIABILITY
THERMO 11/10/66
PROJ ENGR 11-12
REL GROUP 11/12/66

Ⓔ GRUMMAN AIRCRAFT ENGRG CORP
BETHPAGE, L. I., NEW YORK

FOIL ASS'Y ~ DESCENT STAGE
QUAD IV GUILLOTINE
ACCESS COVER

SIZE B
CODE IDENT NO. 26512
LDW280-51830
SCALE NONE
SHEET 1.00 OF 3

ENG 77 1 12-65

C.D.R.= 11/7/66

01 NAS 9-1100

C.L.	QTY PER ASSEMBLY						CODE IDENT	PART NO.	I&T	NOMENCLATURE OR DESCRIPTION	MATERIAL	GOVT SPEC	COML SPEC	STOCK SIZE	PROCESS SYM	FINISH NO.	ZONE
					-3	-1											
						AS REQ'D		MESH	E	INCONEL KNITTED SLEEVING							
					1			LDW280-18168-15	E	FOIL	SEE DWG						
					1			LDW280-18168-13	E	FOIL	↕						
					1			LDW280-18168-11	E	COVER	SEE DWG						
C						1		LDW280-51830-3		WELD ASS'Y					FLW		
C								LDW280-51830-1	E	FOIL & MESH ASS'Y					NONE	NONE	

C.L. = CLEANLINESS LEVEL PER LSP14-0011

SYM OR NO.	PROCESS OR FINISH	GRUMMAN SPEC OR MILITARY SPEC	SYM OR NO.	PROCESS OR FINISH	GRUMMAN SPEC OR MILITARY SPEC	SYM OR NO.	PROCESS OR FINISH	GRUMMAN SPEC OR MILITARY SPEC
						FLW	RESISTANCE WELD	LSP14-6102

I&T: IDENTIFICATION AND TRACEABILITY IN ACCORDANCE WITH : NONE

GRUMMAN AIRCRAFT ENGRG CORP, BETHPAGE, L. I., NEW YORK

SIZE B

CODE IDENT NO. 26512

LDW280-51830

SCALE NONE

SHEET 2.00

ENG 77.2 7-65

01

NAS 9-1100

LDW280-51830

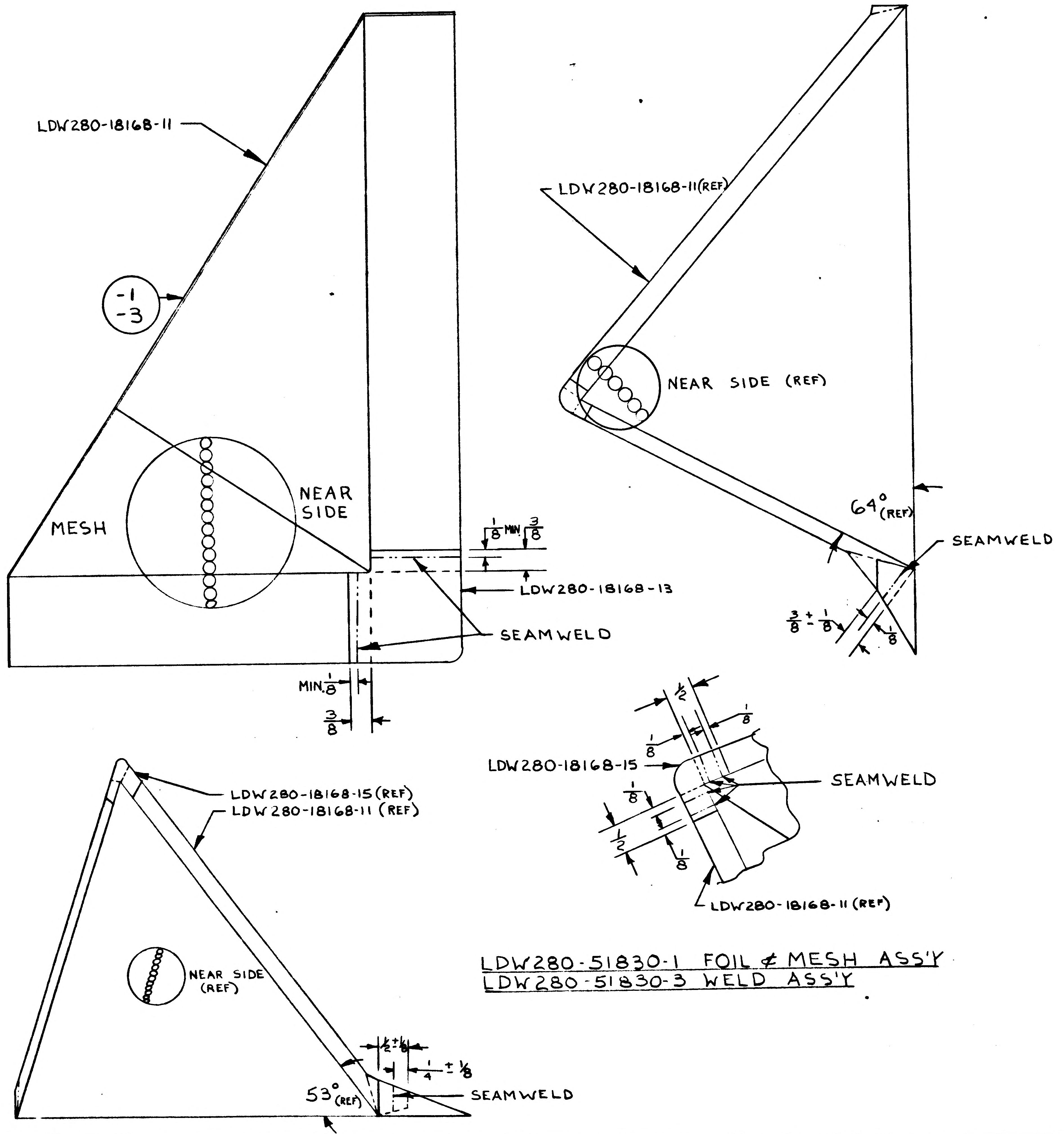

LDW280-51830-1 FOIL & MESH ASS'Y
LDW280-51830-3 WELD ASS'Y

NOTE:

1. NO TOOLING HOLES PERMITTED IN PARTS.
2. SEAMWELD PER LSP14-6102, EXCEPT THAT SPOTS SHALL BE TANGENT +1/32, -0.
3. WELD INCONEL KNITTED SLEEVING TO FOIL SHEET PER LDW280-17522 AFTER FORMING AND WELDING.
4. INCONEL KNITTED SLEEVING TO BE 6 TO 8 INCHES WHEN FLATTENED. WIRE TO BE .0035 TO .0040 INCH DIA. ROUND, "INCONEL 600" ALLOY KNIT PATTERN SQUARE TYPE 5 TO 7 SQUARES PER LINEAR INCH. MAY BE PURCHASED FROM
   MONTGOMERY METAL FABRIC Co,
   WINDSOR LOCKS, CONN.,
   59 CANEL ST.
   (CODE IDENT. 94725)
5. INCONEL KNITTED SLEEVING TO BE OXIDIZED BY EXPOSURE TO 1650°F ± 50°F IN AIR FOR FOUR HOURS.
6. WELDED ASS'YS MAY HAVE RANDOM WRINKLED APPEARANCE.
7. PERMISSIBLE IRREGULARITIES IN WELDED ASS'YS ARE AS FOLLOWS:
   a) HOLES IN THE SEAMWELD ROWS UP TO 1/8 MAX. & AT LEAST 1" APART.
   b) CRACKS IN THE FREE EDGE OF WELDED JOINTS NO CLOSER TOGETHER THAN 1/8" & NOT EXTENDING PAST THE WELD LINE.
   c) IRREGULARITIES IN EXCESS OF (a) & (b) ARE TO BE COVERED WITH A PATCH, THE PATCH SHALL BE OF THE SAME MATERIAL AND THICKNESS AS THE BASIC SKIN BUT SHALL NOT EXCEED A BASIC AREA OF 4 SQ. IN. AND SHALL NOT HAVE A MAXIMUM DIMENSION OF GREATER THAN 5 IN. THE PATCH SHALL BE WELDED (SEAM) AROUND ENTIRE PERIPHERY.

MANUFACTURING OPERATIONS UNLESS OTHERWISE SPECIFIED NOTES CHECKED ✓ APPLY TO THIS DWG.	
PART NUMBER AND ALL OTHER MARKINGS IN REGION MARKED ⊠ USE BOTH SIDES IF NECESSARY.	
FILLET AND INSIDE CORNER RADII TOLERANCES .016R TO .062R ± .010 .063R TO .250R ± .015 OVER .250R ± .030	
DEPTH SHOWN FOR TAPPED HOLES IS FULL THDS. 2-3 IMP. THDS. BEYOND PERMISSIBLE	
EXTERNAL THREAD LENGTH SHOWN INCLUDES 2 IMPERFECT THREADS MAX.	
DO NOT CADMIUM PLATE & PAINT HOLES OR SURFACES MARKED WITH DOUBLE ASTERISK.	
MISMATCH STEP OF ± .005 PERMISSIBLE DUE TO CHANGE OF CUTTERS AT INSIDE INTERSECTING SURFACES.	
DIAMETERS MARKED MUST BE CONCENTRIC WITHIN FULL INDICATOR READING	
HOLES MUST BE KEPT FREE OF CHROME PLATING SOLUTION.	
ALL DIMENSIONS SHOWN TO BE MET AFTER CADMIUM PLATING. THICKNESS OF PLATE .0003 MIN TO .0005 MAX. MIN THICKNESS TO BE .0002 ON THREADED AREAS. NO ALLOWANCES FOR PLATING IN HOLES	
125 √ SURFACE ROUGHNESS INCLUDING REAMED HOLES PER MIL-STD-10	
200 √ FOR ALL DRILLED HOLES	
REMOVE ALL BURRS. BREAK ALL EDGES .015-.031	
INSPECTION INFORMATION MINIMUM PERMISSIBLE AVERAGE EDGE DISTANCE MARKED IS	
SYMBOL √ DENOTES SURFACE TO BE MACHINED	
UNLESS OTHERWISE SPECIFIED TOLERANCE ON FLANGES IS ± 1/32	
LENGTHS OF AN, NAS & MS AL ALY RIVETS SHORTER THAN 1 INCH ARE NOT SPECIFIED	
TOLERANCE ON LOFTED DELINEATIONS IS	

	GRUMMAN AIRCRAFT ENGRG CORP. BETHPAGE, L. I., NEW YORK		
LM	SIZE D	CODE IDENT NO. 26512	LDW280-51830
MODEL OR END ITEM	SCALE FULL		SHEET 3.00

01

NAS 9-1100

8

ENG 32.2 REV 3-65

*

GRUMMAN AIRCRAFT ENGINEERING CORP.
CODE IDENT NO. 26512
ENGINEERING ORDER EMF-A

DWG. NO. LEO 280		EO NO. 421
CONTROL INFO NO. LDW280A-4411		

ON THE FOLLOWING DRAWINGS ADD NOTE *

DRAWING NO.	EFF	CHANGE NUMBER	TITLE
			SEE DWG
LDW280-28730	LTA8 LM-1 THRU LM-6	B 2	
LDW 280-28734	"	A 8	
LDW 280-28735	"	C 3	
LDW 280-28796	LTA8 (18) LM-1 (31) THRU LM-15 (45)	B 3	
LDW230-28747	LTA8 (18) LM-1 (31) THRU LM-6 (36)	B 1	
LDW280-28749	"	A 7	
LDW280-28750	"	B 3	
LDW280-28752	"	B 2	
LDW280-28753	"	A 3	
LDW280-28755	LTA8 (18) LM-1 (31)	A 7	
LDW280-28756	LTA8 (18) LM-1 (31) THRU LM-15 (45)	A 6	
LDW280-28759	LTA8 (18) LM-1 (31) THRU LM-6 (36)	B 2	
LDW280-28760	"	B 1	
LDW280-28768	LM-1 (31)	B 2	
LDW 280-28769	LM-1 (31)	B 1	
LDW280-28771	LTA8 (18), LM-1 (31) THRU LM-6 (36)	B 2	
LDW 280-28772	"	B 1	
LDW280-28774	"	A 7	
LDW280-28775	"	B 2	
LDW 280-28803	"	A 2	
LDW 280-28805	"	A 1	
LDW280-51824	LM-1 (31) THRU LM-15 (45)	A 1	
LDW280-51825	"	A 2	
LDW 280-51829	"	A 1	
LDW 280-51830	"	A 1	
LDW280-51834	"	A 1	SEE DWG

* MANUFACTURED PARTS TO COMPLY WITH REQUIREMENTS OF LPC 280-19

2

DETAIL SPEC REQ		CL II ENGRG CHG		CL I ENGRG CHG									
REASON FOR EO LPC 280-19 PROVIDES COMPLETE FABRICATION AND INSPECTION INFO					DESCRIPTION OF EO ADDED NOTE *								GAEC EO RELEASE 12/20
MODEL	EFFECTIVITY PROCURING ACTIVITY NO.	GAEC UNIT NO.	SUB CONTR UNIT NO.	DRAWING CHANGE REQD ✓ REVISE DWG	RECORD EO	DISPOSITION OF PARTS NOT REWORK	REQ'D SCRAP	APPROVED BY					
LM		NOTED						DATE	12/16/66	12/16/66	12/19/66	12/19/66	12/20 · 12 20 66
								/	VDI	SUPPORT THERMO	RELIAB. GROUP	GROUP LEADER · STRESS GROUP · LIAISON ENGRG	PROJ ENGRG · ~~GOVT~~
				PRIORITY C	DRAWING TITLE NOTED						DRAWING NO. LEO 280		EO NO. 421

ISSUED BY T. AMBROSIO/STRAKOSCH X1153 SECTION VEH DES INT GROUP NO. 335 PL 35

01 NAS 9-1100

B

ENG 32.1 REV 3-65

GRUMMAN AIRCRAFT ENGINEERING CORP.
CODE IDENT NO. 26512
ENGINEERING ORDER

DWG. NO. LDW280-51830		EO NO. A2
CONTROL INFO NO. LDW280B0030		

RESTRICT -1 TO LM-1 & LM-2
(WAS) LM-1 THRU LM-15

FITH

DETAIL SPEC REQ	☐	CL II ENGRG CHG	☐	CL I ENGRG CHG	✓	LCD 1244

5

REASON FOR EO	DESCRIPTION OF EO	GAEC EO RELEASE
NEW SHIELD INSTL CREATED FOR LM-3 THRU LM-15	RESTRICTED -1 TO LM-1 & LM-2 REMOVED LM-3 THRU LM-15 EFF.	C M 11/30/67

MODEL	EFFECTIVITY		
	PROCURING ACTIVITY NO.	GAEC UNIT NO.	SUB CONTR UNIT NO.
LM		LM-3 (33) THRU LM-15 (45)	

DRAWING CHANGE REQD		DISPOSITION OF PARTS									
REVISE DWG	RECORD EO	REWORK	SCRAP	APPROVED BY				P.T.			Botti
✓			✓	DATE	11/29/67			11-29-67	11/29/67	11/29/67	11-29-67
				P	VDI	SUPPORT	RELIAB. GROUP	GROUP LEADER	STRESS GROUP	LIAISON ENGRG / PROJ ENGRG	

PRIORITY	DRAWING TITLE	DRAWING NO.	EO NO.
C	FOIL ASSY-D/S QUAD IV GUILLOTINE ACCESS COVER	LDW280-51830	A2

G.2 120167
ISSUED BY ROESSLER / THORJUSEN x1153 SECTION VDI GROUP NO. 335 PL 25

01

NAS 9-1100

LDW280-51831

MODEL OR END ITEM	NEXT ASSY	MODULE OR SER NO.	REQD PER MODULE OR END ITEM
LM	LDW280-51671	LM-15(45)	1
		LM-14(44)	1
		LM-13(43)	1
		LM-12(42)	1
		LM-11(41)	1
		LM-10(40)	1
		LM-9(39)	1
		LM-8(38)	1
		LM-7(37)	1
		LM-6(36)	1
		LM-5(35)	1
		LM-4(34)	1
		LM-3(33)	1
		LM-2(32)	1
LM	LDW280-51671	LM-1(31)	1

PART NO. LDW280-51831-1
GAEC SCH NO. 52

2

SH REV STATUS: FOR DESCRIPTION OF REV SEE SUBQ SH

SHEET	1.00		2.00	3.00					
REV									
SHEET									
REV									
SHEET									
REV									

LAST SECT LTR USED A-A
LAST DASH NO. USED -1
GRUMMAN REC INFO
PRIM NO. VE(001) EMF
220 WR-14 11/15-6

UNLESS OTHERWISE SPECIFIED DIMENSIONS ARE IN INCHES.
TOLERANCE UNLESS SPECIFIED
FRACTIONS - DECIMALS - ANGLES
± 1/16 ±.030 ± 1/2°
ORIG DWG AUTH
DETAIL SPEC REQUIREMENT
CLASS II ENGRG CHANGE
CLASS I ENGRG CHANGE

CONTRACT NO. NAS 9-1100
LINE ITEM # 1
DOCUMENTATION TYPE II
DRAWN BY J. Backofen 11/5/66
LAYOUT BY J. BACKOFEN
CHECKED BY
GR LEADER 11/8/66
VEH DES INT C. Pusateri 11/9/66
STRUCT. NM 11/11
STRUCT.
WEIGHTS
RELIABILITY
THERMO for M.S. 11/11/66
PROJ ENGR 11-12
REL GROUP J. Pagliaro 11/15/66

GRUMMAN AIRCRAFT ENGRG CORP
BETHPAGE, L. I., NEW YORK

SHIELD ASS'Y - DESCENT STAGE
QUAD IV GUILLOTINE
ACCESS COVER

SIZE B
CODE IDENT NO. 26512
LDW280-51831
SCALE NONE
SHEET 1.00 OF 3

C.D.R. = 11/7/66

ENG 77.1 12-65

01 NAS 9-1100

C.L.	QTY PER ASSEMBLY					-1	CODE IDENT	PART NO.	I&T	NOMENCLATURE OR DESCRIPTION	MATERIAL	GOVT SPEC	COML SPEC	STOCK SIZE	PROCESS SYM	FINISH NO.	ZONE
						AS REQ'D		GT835P-8	E	TAPE	STD. PART						
						2		LDW280-23720-3		STAPLE ASS'Y	SEE DWG						
						2		LDW280-17932-13		WASHER	SEE DWG						
						2		LDW280-51830-1		FOIL ASS'Y	SEE DWG						
						1		LDW280-51829-1		SKIN ASS'Y	SEE DWG						
C								LDW280-51831-1	E	SHIELD ASS'Y					NONE	NONE	

C.L. = CLEANLINESS LEVEL PER LSP14-0011

SYM OR NO.	PROCESS OR FINISH	GRUMMAN SPEC OR MILITARY SPEC	SYM OR NO.	PROCESS OR FINISH	GRUMMAN SPEC OR MILITARY SPEC	SYM OR NO.	PROCESS OR FINISH	GRUMMAN SPEC OR MILITARY SPEC

I & T: IDENTIFICATION AND TRACEABILITY IN ACCORDANCE WITH : NONE

GRUMMAN AIRCRAFT ENGRG CORP, BETHPAGE, L. I., NEW YORK

SIZE	CODE IDENT NO.	
B	26512	LDW280-51831

SCALE NONE

SHEET 2.00

ENG 77.2 7-65

01 NAS 9-1100

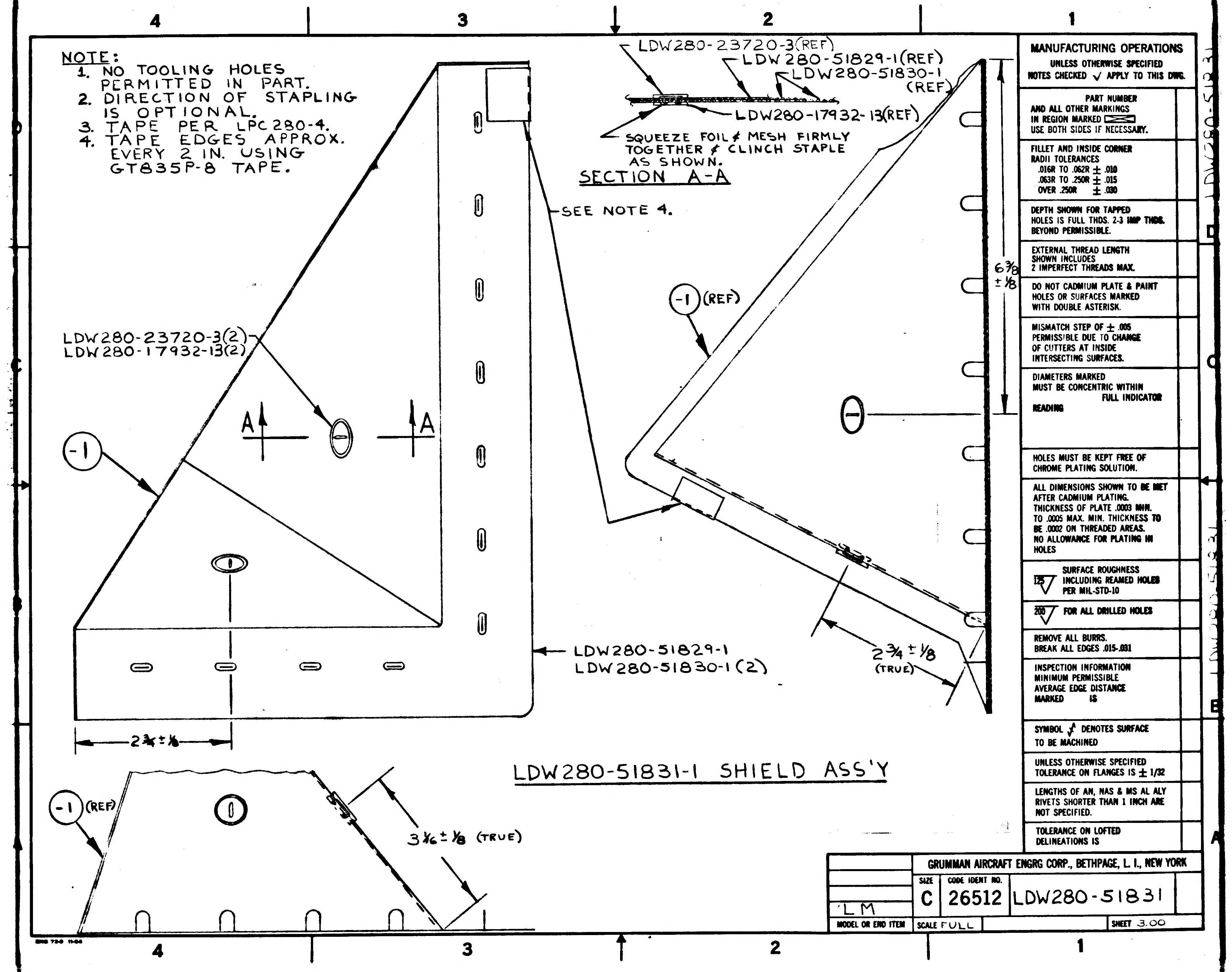
4
3
2
1
LDW280-23720-3(REF)
LDW280-51829-1(REF)
LDW280-51830-1 (REF)
LDW280-17932-13(REF)
SQUEEZE FOIL & MESH FIRMLY TOGETHER & CLINCH STAPLE AS SHOWN.
SECTION A-A
SEE NOTE 4.
-1 (REF)
6⅜ ± ⅛
LDW280-23720-3(2)
LDW280-17932-13(2)
A
A
-1
LDW280-51829-1
LDW280-51830-1 (2)
2¾ ± ⅛ (TRUE)
2¾ ± ⅛
-1 (REF)
3⁵⁄₁₆ ± ⅛ (TRUE)
D
C
B
A

NOTE:
1. NO TOOLING HOLES PERMITTED IN PART.
2. DIRECTION OF STAPLING IS OPTIONAL.
3. TAPE PER LPC 280-4.
4. TAPE EDGES APPROX. EVERY 2 IN. USING GT835P-8 TAPE.

LDW280-51831-1 SHIELD ASS'Y

MANUFACTURING OPERATIONS
UNLESS OTHERWISE SPECIFIED
NOTES CHECKED ✓ APPLY TO THIS DWG.

PART NUMBER AND ALL OTHER MARKINGS IN REGION MARKED ⊠ USE BOTH SIDES IF NECESSARY.

FILLET AND INSIDE CORNER RADII TOLERANCES
.016R TO .062R ± .010
.063R TO .250R ± .015
OVER .250R ± .030

DEPTH SHOWN FOR TAPPED HOLES IS FULL THDS. 2-3 IMP THDS. BEYOND PERMISSIBLE.

EXTERNAL THREAD LENGTH SHOWN INCLUDES 2 IMPERFECT THREADS MAX.

DO NOT CADMIUM PLATE & PAINT HOLES OR SURFACES MARKED WITH DOUBLE ASTERISK.

MISMATCH STEP OF ± .005 PERMISSIBLE DUE TO CHANGE OF CUTTERS AT INSIDE INTERSECTING SURFACES.

DIAMETERS MARKED MUST BE CONCENTRIC WITHIN FULL INDICATOR READING

HOLES MUST BE KEPT FREE OF CHROME PLATING SOLUTION.

ALL DIMENSIONS SHOWN TO BE MET AFTER CADMIUM PLATING. THICKNESS OF PLATE .0003 MIN. TO .0005 MAX. MIN. THICKNESS TO BE .0002 ON THREADED AREAS. NO ALLOWANCE FOR PLATING IN HOLES

125 ▽ SURFACE ROUGHNESS INCLUDING REAMED HOLES PER MIL-STD-10

200 ▽ FOR ALL DRILLED HOLES

REMOVE ALL BURRS. BREAK ALL EDGES .015-.031

INSPECTION INFORMATION MINIMUM PERMISSIBLE AVERAGE EDGE DISTANCE MARKED IS

SYMBOL ƒ DENOTES SURFACE TO BE MACHINED

UNLESS OTHERWISE SPECIFIED TOLERANCE ON FLANGES IS ± 1/32

LENGTHS OF AN, NAS & MS AL ALY RIVETS SHORTER THAN 1 INCH ARE NOT SPECIFIED.

TOLERANCE ON LOFTED DELINEATIONS IS

	GRUMMAN AIRCRAFT ENGRG CORP., BETHPAGE, L. I., NEW YORK		
LM	SIZE C	CODE IDENT NO. 26512	LDW280-51831
MODEL OR END ITEM	SCALE FULL		SHEET 3.00

O1 NAS 9-1100

B

ENG 32.1 REV 3-65

GRUMMAN AIRCRAFT ENGINEERING CORP.
CODE IDENT NO. 26512
ENGINEERING ORDER EMF A

DWG NO. LDW280-S1831	EO NO. A1
CONTROL INFO NO. LDW280A-5758	

IN F/D & LM FOR-1 REMOVE LDW280-S1829-1 SKIN ASSY & ADD LDW280-S1829-3 SKIN ASSY. ADD GS11K-1-4, GS11K-3-061, GS11K-1-7, GS11K-3-105 & GS577A-1 ADD 1 3/8, 1 1/2 & 9/16 (2 PLS) AS SHOWN

ADD NOTE: FABRICATE PER LPC 280-25 (USE NEXT AVAILABLE NOTE No)

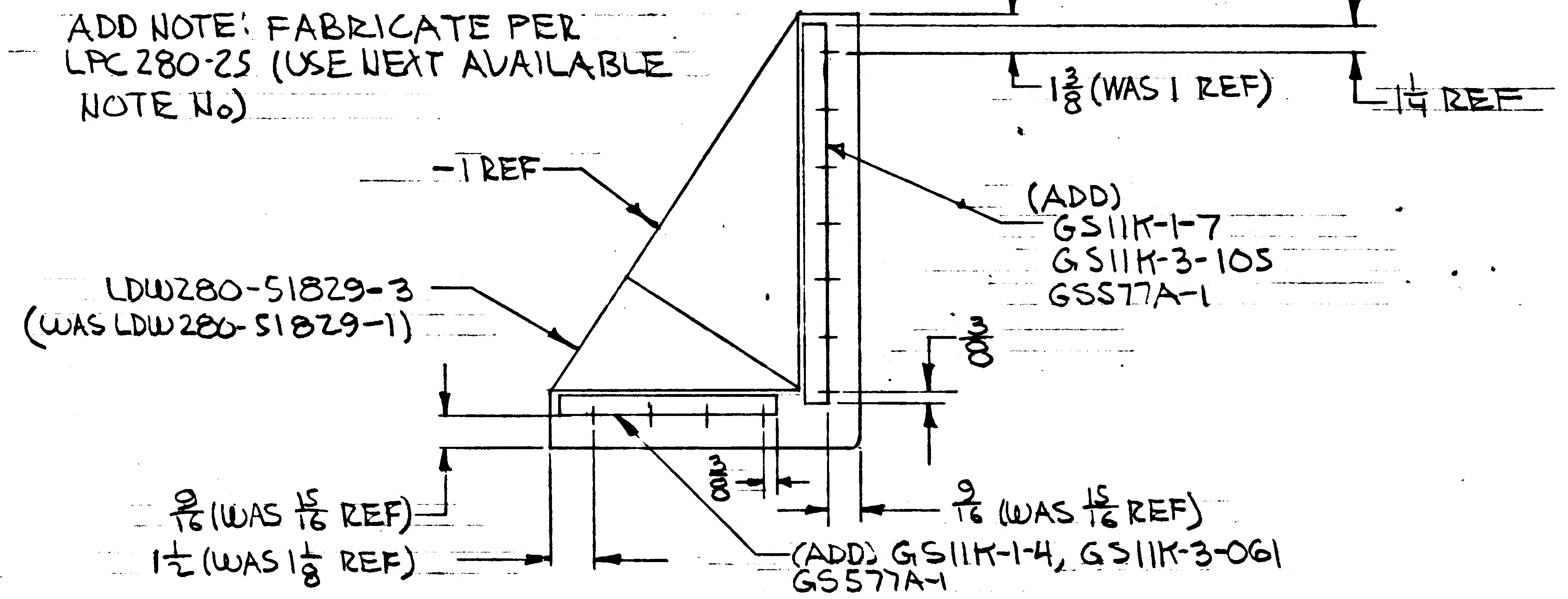
-1 REF
LDW280-S1829-3 (WAS LDW280-S1829-1)
1 3/8 (WAS 1 REF)
1 1/4 REF
(ADD) GS11K-1-7 GS11K-3-105 GS577A-1
.083
.083
9/16 (WAS 15/16 REF)
1 1/2 (WAS 1 1/8 REF)
9/16 (WAS 15/16 REF)
(ADD) GS11K-1-4, GS11K-3-061 GS577A-1

DETAIL SPEC REQ	☐	CL II ENGRG CHG	☑	CL I ENGRG CHG	☐

2 C

REASON FOR EO	DESCRIPTION OF EO	GAEC EO RELEASE
LCR 928 · IMPROVE PAINT ADHESION	FOR-1 REMOVED LDW280-S1829-1 & ADDED LDW280-S1829-3 ADDED GS11K-1-- GS11K-3--- & GS577A-1. ADDED 1 3/8, 1 1/2 & 9/16 (2PLS) ADDED NOTE: FABRICATE PER LPC 280-25	JK 3/13/7

MODEL	PROCURING ACTIVITY NO.	GAEC UNIT NO.	SUB CONTR UNIT NO.
LM		LM-1 (3U) THRU	LM-15 (4S)

DRAWING CHANGE REQD		DISPOSITION OF PARTS		APPROVED BY	gap			JAS	WJH		UP	
☑		☑		DATE	3/6/67			3/1/67	3/6/67		3-11-67	3-13-67
REVISE DWG	RECORD EO	REWORK	SCRAP	S	VDI	SUPPORT	RELIAB. GROUP	GROUP LEADER	STRESS GROUP	LIAISON ENGRG	PROJ ENGRG	~~GOVT~~

PRIORITY	DRAWING TITLE	DRAWING NO.	EO NO.
C	SHIELD ASSY DES STAGE QUAD III GUILLOTINE COVER	LDW280-S1831	A1

ISSUED BY G. ZEMAN / J. STRAKOSCH SECTION VDI GROUP NO. 335 PL 35

01 NAS 9-1100

B

ENG 32.2 REV 3-68

GRUMMAN AIRCRAFT ENGINEERING CORP.
CODE IDENT NO. 26512
ENGINEERING ORDER *

DWG. NO. LEO 280
EO NO. 589
CONTROL INFO NO. LDW280A6772

ON THE DWGS LISTED BELOW IN L/M & F/D AT INSTL OF ALL GS11K-1--- TAB STRIPS REMOVE GS577A-1 & ADD GS577A-4 STAPLE

DWG No *	EFF	CHANGE No	TITLE
LDW280-28559-5	LM-1(31)	B3	
LDW280-28665-5	LM-1(31)	B10	
LDW280-28733-3	LM-1(31) THRU LM-3(33)	A4	
LDW280-28736-5 & -7	LM-1(31) THRU LM-15(45)	A5	
LDW280-28748-11, -13 & -15	LM-1(31) THRU LM-15(45)	A10	
LDW280-28754-7 & -9	LM-1(31) THRU LM-15(45)	A9	
LDW280-28758-5 & -7	LM-1(31) THRU LM-3(33)	B3	SEE
LDW280-28770-5	LM-1(31) THRU LM-15(45)	B5	
LDW280-28773-11 & -13	LM-1(31) THRU LM-3(33)	A8	
LDW280-28804-5	LM-1(31) THRU LM-15(45)	A6	
LDW280-28817-7	LM-1(31) THRU LM-15(45)	A4	DWG
LDW280-51742-3	LM-1(31)	A4	
LDW280-51831-1	LM-1(31) THRU LM-15(45)	A2	
LDW280-52739-3	LM-2(32) THRU LM-15(45)	A2	
LDW280-52742-1, -3, -5, -7, -9 & -11	LM-2(32) THRU LM-15(45)	A7	
LDW280-52763-9 & -11	LM-2(32) THRU LM-15(45)	A5	
LDW280-52767-1 & -3	LM-2(32) THRU LM-15(45)	B3	
LDW280-53600-3 & -5	LM-3(33)	A3	
LDW280-54605-1	LM-4(34) THRU LM-15(45)	A2	
LDW280-54714-1	LM-4(34) THRU LM-15(45) & DES. VER. 70	A5	
LDW280-54733-1	LM-4(34) THRU LM-15(45)	A2	
LDW280-54758-1 & -3	LM-4(34) THRU LM-15(45)	A1	
LDW280-54784-1	LM-4(34) THRU LM-15(45) & DES. VER. 70	A2	
LSK280-10993-17, -19 & -21	DES. VER. 70	A4	

CDR = 5/10/67

DETAIL SPEC REQ ☐ CL II ENGRG CHG ☑ CL I ENGRG CHG ☐ LED 928

GAEC EO RELEASE 2 C

JK 5/?/7

REASON FOR EO: TO PROVIDE CORRECT STAPLE CALLOUT

DESCRIPTION OF EO: ON * REPLACED GS577A-1 WITH GS577A-4

MODEL	EFFECTIVITY: PROCURING ACTIVITY NO.	GAEC UNIT NO.	SUB CONTR UNIT NO.
LM		(NOTED ABOVE)	

DRAWING CHANGE REQD: REVISE DWG ✓ RECORD EO

DISPOSITION OF PARTS: REWORK ✓ SCRAP

APPROVED BY: 5 VDI; DATE 5/4/67

SUPPORT
RELIAB. GROUP
GROUP LEADER
STRESS GROUP WH 5/4/67
LIAISON ENGRG
PROJ ENGRG 5/6/67 5/8/67

PRIORITY: C

DRAWING TITLE: NOTED

DRAWING NO.: LEO280

EO NO.: 589

ISSUED BY G. ZEMAN / J. STRAKOSCH SECTION VDI GROUP NO. 335 PL 25

01

NAS 9-1100

8

ENG 32.1 REV 3-65

GRUMMAN AIRCRAFT ENGINEERING CORP.
CODE IDENT NO. 26512
ENGINEERING ORDER

DWG. NO. LDW280-51831 | EO NO. A3
CONTROL INFO NO. LDW280B0031

RESTRICT -1 TO LM-1 & LM-2
(WAS) LM-1 THRU LM-15

FITH

DETAIL SPEC REQ ☐ | CL II ENGRG CHG ☐ | CL I ENGRG CHG ✓ LCD 1244

B05

REASON FOR EO	DESCRIPTION OF EO	GAEC C EO RELEASE
NEW SHIELD INSTL CREATED FOR LM-3 THRU LM-15	RESTRICTED -1 TO LM-1 & LM-2 REMOVED LM-3 THRU LM-15 EFF.	11/30/7

MODEL	EFFECTIVITY: PROCURING ACTIVITY NO.	GAEC UNIT NO.	SUB CONTR UNIT NO.
LM		LM-3 (33) THRU LM-15 (45)	

DRAWING CHANGE REQD: REVISE DWG	RECORD EO	DISPOSITION OF PARTS: REWORK	SCRAP
✓			✓

	APPROVED BY	DATE	
	Jap	11 29 67	VDI
THERMAL SUPPORT			
RELIAB. GROUP			
GROUP LEADER	P.T.	11-29-67	
STRESS GROUP		11/29/67	
LIAISON ENGRG			
PROJ ENGRG	Jap	11 29 67	
	Botte	11-29-67	

PRIORITY C
DRAWING TITLE SHIELD ASSY - D/S QUAD IV GUILLOTINE ACCESS COVER
DRAWING NO. LDW280-51831
EO NO. A3

4.2 120167 x 1153
ISSUED BY ROESSLER / THORJUSEN SECTION VDI GROUP NO. 335 PL 25

01

NAS 9-1100

MODEL OR END ITEM	NEXT ASSY	MODULE OR SER NO.	REQD PER MODULE OR END ITEM
LM	LDW280-28714	LM-3(33)	1
LM	LDW280-28714	LM-2(32)	1
LM	LDW280-28714	LM-1(31)	1
PART NO. LDW280-51833-3		GAEC SCH NO.	

MODEL OR END ITEM	NEXT ASSY	MODULE OR SER NO.	REQD PER MODULE OR END ITEM
LM	LDW280-28745	LM-15(45)	1
		LM-14(44)	1
		LM-13(43)	1
		LM-12(42)	1
		LM-11(41)	1
		LM-10(40)	1
		LM-9(39)	1
		LM-8(38)	1
		LM-7(37)	1
		LM-6(36)	1
		LM-5(35)	1
		LM-4(34)	1
		LM-3(33)	1
		LM-2(32)	1
LM	LDW280-28745	LM-1(31)	1
PART NO. LDW280-51833-1		GAEC SCH NO. 52	

MODEL OR END ITEM	NEXT ASSY	MODULE OR SER NO.	REQD PER MODULE OR END ITEM
PART NO.		GAEC SCH NO.	

2

SH REV STATUS: FOR DESCRIPTION OF REV SEE SUBQ SH

SHEET	1.00		2.00	3.00				
REV								
SHEET								
REV								
SHEET								
REV								

LAST SECT LTR USED —

LAST DASH NO. USED -3

GRUMMAN REL© INFO			
PRIM NO.	6E(001)		EMF
207	MP-14	11-11-6	

UNLESS OTHERWISE SPECIFIED DIMENSIONS ARE IN INCHES.
TOLERANCE UNLESS SPECIFIED FRACTIONS - DECIMALS - ANGLES
± 1/32 ±.010 ± 1/2
ORIG DWG AUTH
DETAIL SPEC REQUIREMENT
CLASS II ENGRG CHANGE
CLASS I ENGRG CHANGE

CONTRACT NO. NAS9-1100 LINE ITEM #1 DOCUMENTATION TYPE II

DRAWN BY	E. MOUQUIN 10-24	RELIABILITY	
LAYOUT BY	E MOUQUIN 10-24	THERMO	11/9/66
CHECKED BY			
GRP LEADER	11/3/66		
VEH.DES.INT.	W.R.BISCHOFF 11/3		
STRUCTURES	11/10	PROJ ENGR	11-9-66
STRUCTURES		REL GROUP	11/10/66
WEIGHTS			

(12) GRUMMAN AIRCRAFT ENGRG CORP
BETHPAGE, L. I., NEW YORK

SHIELD ASSY
DESCENT STAGE - QUAD I & III
PLUME IMPINGEMENT ~ SCREW PROTECTION

SIZE B CODE IDENT NO. 26512 LDW280-51833
SCALE NONE SHEET 1.00 OF 3.00

ENG 77.1 12-65

CDR 11-4-66

01 NAS 9-1100

C.L.	QTY PER ASSEMBLY						CODE IDENT	PART NO.	I&T	NOMENCLATURE OR DESCRIPTION	MATERIAL	GOVT SPEC	COML SPEC	STOCK SIZE	PROCESS SYM	FINISH NO.	ZONE
//////					-3	-1											
					AS REQD	AS REQD		LDW280P17590-11	E	TAPE	SEE DWG						
					1	1		LDW280-51834-1	E	FOIL ASSY	SEE DWG						
					1	1		LDW280-18141-11	E	SKIN	SEE DWG						
C								LDW280-51833-3	E	SHIELD ASSY							
C								LDW280-51833-1	E	SHIELD ASSY							

C.L. = CLEANLINESS LEVEL PER LSP14-0011

SYM OR NO.	PROCESS OR FINISH	GRUMMAN SPEC OR MILITARY SPEC	SYM OR NO.	PROCESS OR FINISH	GRUMMAN SPEC OR MILITARY SPEC	SYM OR NO.	PROCESS OR FINISH	GRUMMAN SPEC OR MILITARY SPEC

I & T: IDENTIFICATION AND TRACEABILITY IN ACCORDANCE WITH : NONE

GRUMMAN AIRCRAFT ENGRG CORP, BETHPAGE, L. I., NEW YORK

SIZE	CODE IDENT NO.	
B	26512	LDW280-51833

SCALE NONE SHEET 2.00

ENG 77.2 7-65

01 NAS 9-1100

NOTES

1. NO TOOLING HOLES PERMITTED IN PARTS

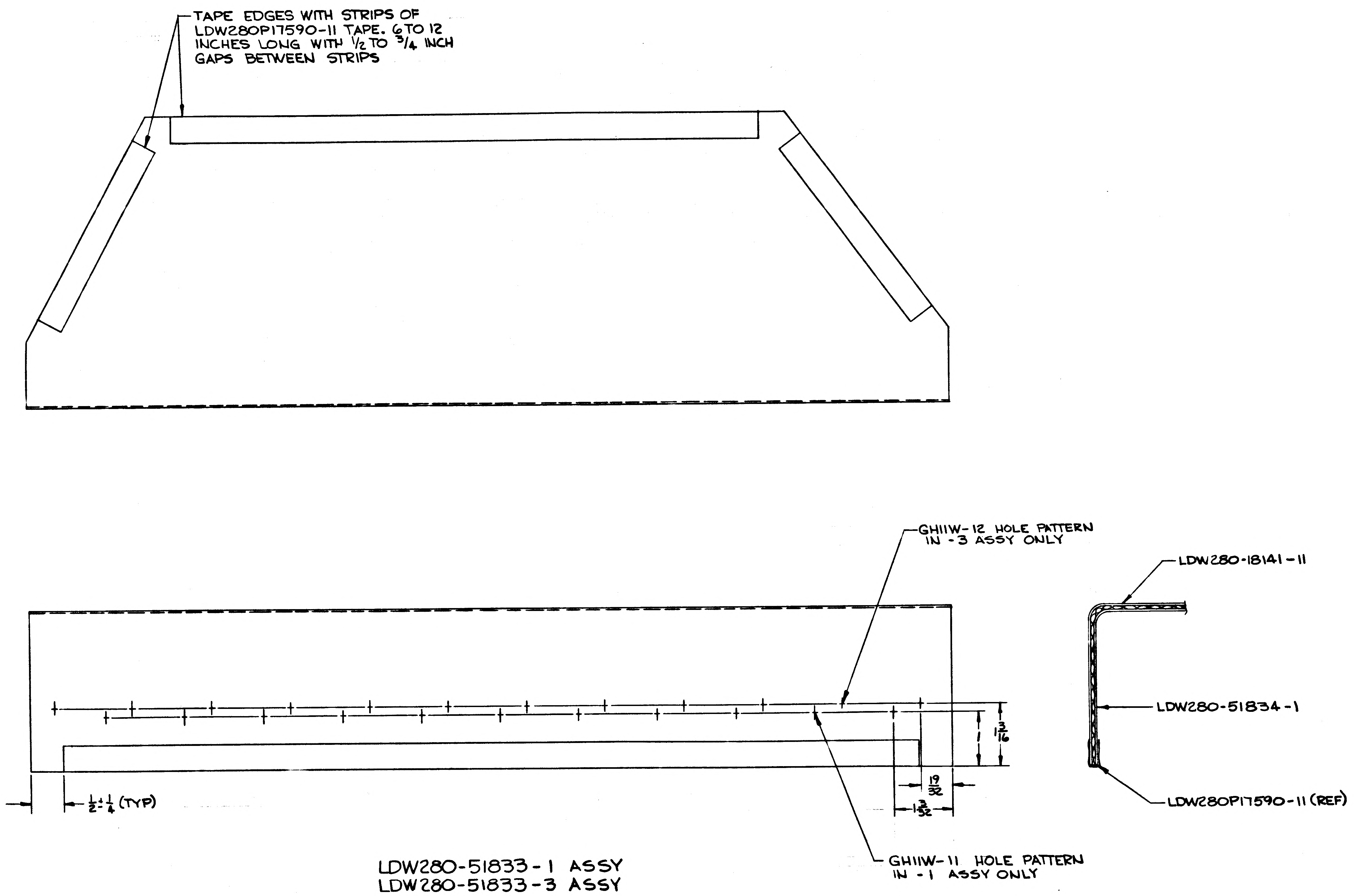
TAPE EDGES WITH STRIPS OF LDW280P17590-11 TAPE, 6 TO 12 INCHES LONG WITH 1/2 TO 3/4 INCH GAPS BETWEEN STRIPS
GH11W-12 HOLE PATTERN IN -3 ASSY ONLY
LDW280-18141-11
LDW280-51834-1
LDW280P17590-11 (REF)
1 3/16
1
19/32
1 3/32
1/2 ± 1/8 (TYP)
GH11W-11 HOLE PATTERN IN -1 ASSY ONLY

LDW280-51833-1 ASSY
LDW280-51833-3 ASSY

MANUFACTURING OPERATIONS
UNLESS OTHERWISE SPECIFIED
NOTES CHECKED √ APPLY TO THIS DWG.

- PART NUMBER AND ALL OTHER MARKINGS IN REGION MARKED ⊠ USE BOTH SIDES IF NECESSARY.
- FILLET AND INSIDE CORNER RADII TOLERANCES
  - .016R TO .062R ± .010
  - .063R TO .250R ± .015
  - OVER .250R ± .030
- DEPTH SHOWN FOR TAPPED HOLES IS FULL THDS. 2-3 IMP THDS. BEYOND PERMISSIBLE.
- EXTERNAL THREAD LENGTH SHOWN INCLUDES 2 IMPERFECT THREADS MAX.
- DO NOT CADMIUM PLATE & PAINT HOLES OR SURFACES MARKED WITH DOUBLE ASTERISK.
- MISMATCH STEP OF ± .005 PERMISSIBLE DUE TO CHANGE OF CUTTERS AT INSIDE INTERSECTING SURFACES.
- DIAMETERS MARKED MUST BE CONCENTRIC WITHIN FULL INDICATOR READING
- HOLES MUST BE KEPT FREE OF CHROME PLATING SOLUTION.
- ALL DIMENSIONS SHOWN TO BE MET AFTER CADMIUM PLATING. THICKNESS OF PLATE .0003 MIN. TO .0005 MAX. MIN. THICKNESS TO BE .0002 ON THREADED AREAS. NO ALLOWANCE FOR PLATING IN HOLES
- $\overline{125}\surd$ SURFACE ROUGHNESS INCLUDING REAMED HOLES PER MIL-STD-10
- $\overline{200}\surd$ FOR ALL DRILLED HOLES
- REMOVE ALL BURRS. BREAK ALL EDGES .015-.031
- INSPECTION INFORMATION MINIMUM PERMISSIBLE AVERAGE EDGE DISTANCE MARKED IS
- SYMBOL $\surd$ DENOTES SURFACE TO BE MACHINED
- UNLESS OTHERWISE SPECIFIED TOLERANCE ON FLANGES IS ± 1/32
- LENGTHS OF AN, NAS & MS AL ALY RIVETS SHORTER THAN 1 INCH ARE NOT SPECIFIED.
- TOLERANCE ON LOFTED DELINEATIONS IS

LAYOUT RELEASE ~ TO BE REDRAWN
ON PRODUCTION FORMAT

GRUMMAN AIRCRAFT ENGRG CORP., BETHPAGE, L. I., NEW YORK
SIZE F
CODE IDENT NO. 26512
LDW280-51833
MODEL OR END ITEM LM
SCALE
SHEET 3.OC

CDR 4-11-66

LDW280-51833

01 NAS 9-1100

A

ENG 32.1 REV 3-65

GRUMMAN AIRCRAFT ENGINEERING CORP.
CODE IDENT NO. 26512
ENGINEERING ORDER EMF-A

DWG NO. LDW280-51833		EO NO. A1
CONTROL INFO NO. LDW280A-5460		

ON-1 REMOVE EFF LM-2(32) THRU LM-15(45)

ADD -5 IDENTICAL TO -1 EXCEPT LDW280-18191-13 REPLACES LDW280-18191-11
N/A LDW280-28745; EFF LM-2(32) THRU LM-15(45) 1 REQ'D/MOD

ON-3 REMOVE EFF LM-2(32) & LM-3(33)

ADD -7 IDENTICAL TO-3 EXCEPT LDW280-18191-13 REPLACES LDW280-18191-11
N/A LDW280-28719; EFF LM-2(32) & LM-3(33) 1 REQ'D/MOD

ADD, ON-7 GS11K-2-170
ADD ON-5 GS11K-2-154
(FABRICATE PER LPC290-25)
ON-5 & -7 (ADD) GT935P-8

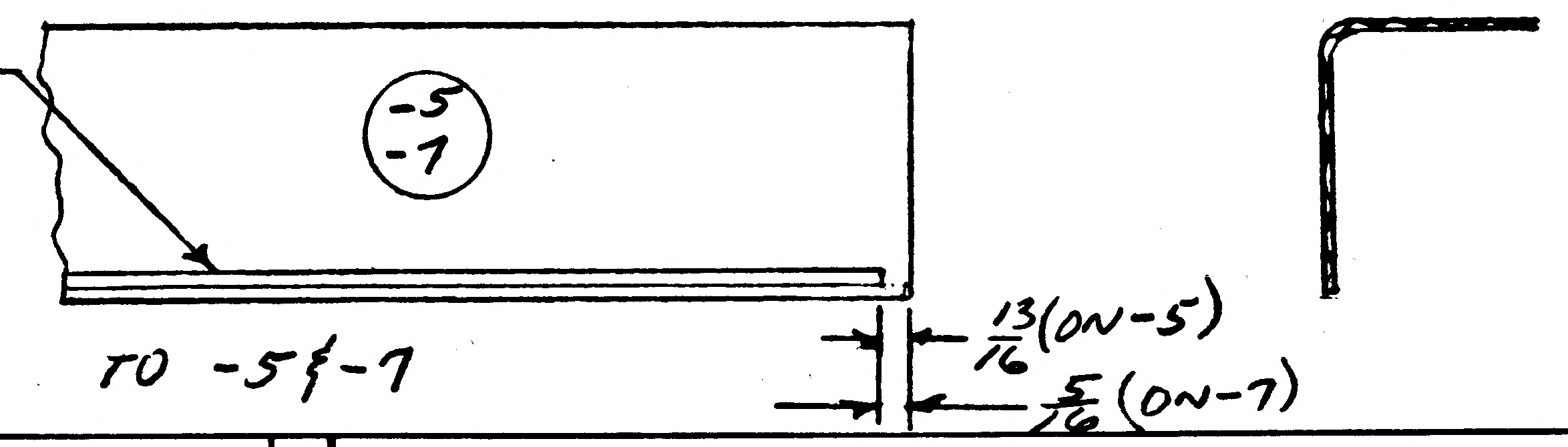

-1 & -3 MAY BE REWORKED TO -5 & -7

DETAIL SPEC REQ		CL II ENGRG CHG		CL I ENGRG CHG		2

REASON FOR EO	DESCRIPTION OF EO	GAEC EO RELEASE
LCR-928 TO IMPROVE PAINT ADHESION	ON-1 REMOVED EFF LM-2(32) THRU LM-15(95) ON-3 REMOVED LM-2(32) & LM-3(33); ADDED -5 & -7	FK 3/23/7

MODEL	EFFECTIVITY: PROCURING ACTIVITY NO.	EFFECTIVITY: GAEC UNIT NO.	EFFECTIVITY: SUB CONTR UNIT NO.
LM		LM-15(95)	
LM		THRU	
LM		LM-2(32)	

DRAWING CHANGE REQD: REVISE DWG	DRAWING CHANGE REQD: RECORD EO	DISPOSITION OF PARTS: REWORK	DISPOSITION OF PARTS: SCRAP
✓		✓	

APPROVED BY		SUPPORT	RELIAB. GROUP	GROUP LEADER	STRESS GROUP	LIAISON ENGRG	PROJ ENGRG	GOVT
DATE	2/1/67			1/13/67	2/14/67		2/17/67	2-20-67
5	VDI							

PRIORITY	DRAWING TITLE	DRAWING NO.	EO NO.
C	SHIELD ASS'Y D/S QUAD I & III PLUME IMPG. SCREW PENETRATION	LDW280-51833	A1

ISSUED BY T. AMBROSIO / STRAKOSCH X1392 SECTION VDI GROUP NO. 335 PL 35

01

NAS 9-1100

ENG 32.1 REV 3-66

GRUMMAN AIRCRAFT ENGINEERING CORP.
CODE IDENT NO. 26512
ENGINEERING ORDER

DWG. NO. LDW280-51833
EO NO. A2
CONTROL INFO NO. LDW280A-5651

THIS IS A REVISION OF EO A1 LDW280-51833

ON-1 REMOVE LM-1(31) THRU LM-15(45) EFF (WAS REMOVE LM-2(32) THRU LM-15(45))
ADD -5 . EFF LM-1(31) THRU LM-15(45) (WAS EFF LM-2(32) THRU LM-15(45)

ON-3 REMOVE LM-1(31) THRU LM-15(45) EFF (WAS REMOVE LM-2(32) THRU LM-15(45)
ADD-7 EFF LM-1(31) THRU LM-15(45) (WAS EFF LM-2(32) THRU LM-16(45))

DETAIL SPEC REQ ☐ CL II ENGRG CHG ✓ CL I ENGRG CHG ☐ LCR 928

2
C

REASON FOR EO: LCR 928 IMPROVE PAINT ADHESION

DESCRIPTION OF EO: REVISED EO A1 ON-1 & -3 REMOVED LM-1 THRU LM-15 EFF (WAS REMOVED LM-2 THRU LM-15 EFF. ON-5 & -7 ADDED LM-1 EFF

R/I GAEC EO RELEASE: JK 3/10/67

MODEL	PROCURING ACTIVITY NO.	GAEC UNIT NO.	SUB CONTR UNIT NO.
LM		LM-1(31) THRU	LM-15(45)

DRAWING CHANGE REQD: REVISE DWG ✓ RECORD EO ☐
DISPOSITION OF PARTS: REWORK ✓ SCRAP ☐

	S	YDI	SUPPORT	RELIAB GROUP	GROUP LEADER	STRESS GROUP	LIAISON ENGRG	PROJ ENGRG	
APPROVED BY					JMS			Lam	
DATE	3/4/67				3/4/67	3/6/67		3/7/67	3/10/67

PRIORITY: C
DRAWING TITLE: SHIELD ASSY DES STAGE QUAD I & III SCREW PROTECTION
DRAWING NO.: LDW280-51833
EO NO.: A2

ISSUED BY G. ZEMAN/ J. STRAKOSCH SECTION YDI GROUP NO. 335 PL 35

01 NAS 9-1100

ENG 32.1 REV 3-65

GRUMMAN AIRCRAFT ENGINEERING CORP.
CODE IDENT NO. 26512
ENGINEERING ORDER *

DWG. NO. LDW280-51833
EO NO. A3
CONTROL INFO NO. LDW280A-6298

THIS IS A REVISION OF EO A2 LDW280-51833

ON-3 REMOVE LM-1(31) THRU LM-3(33) EFF
WAS ON-3 REMOVE LM-1(31) THRU LM-15(45) EFF
ADD-7 EFF LM-1(31) THRU LM-3(33)
WAS ADD-7 EFF LM-1(31) THRU LM-15(45)

DETAIL SPEC REQ ☐ CL II ENGRG CHG ☑ CL I ENGRG CHG ☐ LCD-928

5

REASON FOR EO: LCD 928 TO IMPROVE PAINT ADHESION

DESCRIPTION OF EO: REF EO A2 - ON-3 REMOVE LM-1(31) THRU LM-3(33) WAS ON-3 REMOVE LM-1(31) THRU LM-15(45) ADD-7 EFF LM-1(31) THRU LM-3(33) WAS ADD-7 EFF LM-1(31) THRU LM-15(45)

Ⓡ GAEC EO RELEASE: JS 4-19-7 C

MODEL	PROCURING ACTIVITY NO.	GAEC UNIT NO.	SUB CONTR UNIT NO.
LM		LM-1(31) THRU	LM-15(45)

DRAWING CHANGE REQD: REVISE DWG ✓ RECORD EO
DISPOSITION OF PARTS: REWORK NOT REQD SCRAP

APPROVED BY
DATE 4/10/67
6 VDI
SUPPORT
RELIAB. GROUP
GROUP LEADER 4/10/67
STRESS GROUP 4/10/67
LIAISON ENGRG
PROJ ENGRG 4/13
4-18-67

PRIORITY: C
DRAWING TITLE: SHIELD ASSY QUAD I & III DES STAGE SCREW PROTECTION
DRAWING NO.: LDW280-51833
EO NO.: A3

ISSUED BY G. ZEMAN/J. STRAROSCH SECTION VDI GROUP NO. 335 PL 25

01 NAS 9-1100

C

ENG 32.1 REV 3-65

GRUMMAN AIRCRAFT ENGINEERING CORP.
CODE IDENT NO. 26512
ENGINEERING ORDER

DWG. NO. LEO280
EO NO. 757
CONTROL INFO NO. LDW280A 9695

FOR THE NOTED DWGS, REVISE EFFECTIVITY AS SHOWN:

DWG NO.	DASH NO.▲	DWG TITLE	EFF (NOW) ■	EFF (WAS) ●	CHANGE NO.
LDW280-51833 ✓	-5	SHIELD ASSY D/S QUAD I PLUME IMPINGEMENT	LM-1 (31) & LM-2 (32)	LM-1(31) THRU LM-15(45)	A4
-51833	-7	SHIELD ASSY D/S QUAD III PLUME IMPINGEMENT	LM-1 (31) & LM-2 (32)	LM-1(31) THRU LM-3(33)	
-51834	-1	FOIL ASSY D/S QUAD I & III ~SCREW PROTECTION	LM-1 (31) & LM-2 (32)	LM-1(31) THRU LM-15 (45)	A2
-18141	-13	SKIN D/S QUAD I PLUME IMPINGEMENT ~SCREW PROTECTION	LM-1 (31) & LM-2 (32)	LM-1 (31) THRU LM-15 (45)	A4
LDW280-18142	-11	FOIL D/S QUAD I & III PLUME IMPINGEMENT SCREW PROTECT.	LM-1 (31) & LM-2 (32)	LM-1 (31) THRU LM-15 (45)	A1

DETAIL SPEC REQ ☐ CL II ENGRG CHG ☐ CL I ENGRG CHG ☑ LCD 1244

REASON FOR EO: TO PROVIDE FOR FITH SHIELD

DESCRIPTION OF EO: , RESTRICTED DASH NO. (▲) TO (■) WAS (●)

GAEC EO RELEASE: JK 10/18/67

MODEL	PROCURING ACTIVITY NO.	GAEC UNIT NO.	SUB CONTR UNIT NO.
LM		LM3 (33) THRU	
LM		LM-15 (45)	

DRAWING CHANGE REQD: REVISE DWG ✓ RECORD EO
DISPOSITION OF PARTS: REWORK SCRAP ✓

APPROVED BY								
DATE	10/17/67			10/17/67	10/17/67		10/17/67	10-18-67
P	V.Q.I.	SUPPORT	RELIAB. GROUP	GROUP LEADER	STRESS GROUP	LIAISON ENGRG	PROJ ENGRG	GOVT

PRIORITY: C
DRAWING TITLE: NOTED ABOVE
DRAWING NO.: LEO 280-
EO NO.: 757

CDR 10-27-67
ISSUED BY DON THOMAS / STRAKOSCH SECTION V.Q.I. x 1153 GROUP NO. 335 PL 25

01

NAS 9-1100

MODEL OR END ITEM	NEXT ASSY	MODULE OR SER NO.	REQD PER MODULE OR END ITEM
PART NO.		GAEC SCH NO.	

MODEL OR END ITEM	NEXT ASSY	MODULE OR SER NO.	REQD PER MODULE OR END ITEM
PART NO.		GAEC SCH NO.	

MODEL OR END ITEM	NEXT ASSY	MODULE OR SER NO.	REQD PER MODULE OR END ITEM
LM	LDW280-51833	LM-15(45)	1
		LM-14(44)	1
		LM-13(43)	1
		LM-12(42)	1
		LM-11(41)	1
		LM-10(40)	1
		LM-9(39)	1
		LM-8(38)	1
		LM-7(37)	1
		LM-6(36)	1
		LM-5(35)	1
		LM-4(34)	1
		LM-3(33)	2
		LM-2(32)	2
LM	LDW280-51833	LM-1(31)	2
PART NO. LDW280-51834 -1		GAEC SCH NO. 52	

2

SH REV STATUS: FOR DESCRIPTION OF REV SEE SUBQ SH

SHEET	1.00		2.00	3.00						
REV										
SHEET										
REV										
SHEET										
REV										

LAST SECT LTR USED	—	GRUMMAN REL INFO			
LAST DASH NO. USED	-1	PRIM NO.	VE(001)		EMF
		207	MP-14	11-11-6	

UNLESS OTHERWISE SPECIFIED DIMENSIONS ARE IN INCHES.
TOLERANCE UNLESS SPECIFIED FRACTIONS - DECIMALS – ANGLES
± 1/32 ±.010 ± 1/2°
ORIG DWG AUTH
DETAIL SPEC REQUIREMENT
CLASS II ENGRG CHANGE
CLASS I ENGRG CHANGE

CONTRACT NO. NAS 9 - 1100
LINE ITEM #1
DOCUMENTATION TYPE II

DRAWN BY	E. MOUQUIN 10-24	RELIABILITY	
LAYOUT BY	E MOUQUIN 10-24	THERMO	M. Sefer 11/4/66
CHECKED BY			
GRP LEADER	J. Lindon 11/2/66		
VEH. DES. INT	W. R. BISCHOFF 11/3		
STRUCTURES	W/64 11/10	PROJ ENGR	11-9-66
STRUCTURES		REL GROUP	
WEIGHTS			

GRUMMAN AIRCRAFT ENGRG CORP
BETHPAGE, L. I., NEW YORK

FOIL ASSY
DESCENT STAGE ~ QUAD I & III
PLUME IMPINGEMENT ~ SCREW PROTECTION

SIZE	CODE IDENT NO.	
B	26512	LDW280-51834
SCALE	NONE	SHEET 1.00 OF 3

ENG 77.1 12-65

CDR 11-4-66

01 NAS 9-1100

						AS REQ'D		MESH	E	INCONEL KNITTED SLEEVING (SEE NOTE 1)							
						1		LDW280-18142-11	E	FOIL	SEE DWG						
C								LDW280-51834-1	E	FOIL ASSY				SEE NOTE 2		NONE	
▨						-1	CODE IDENT	PART NO.	I&T	NOMENCLATURE OR DESCRIPTION	MATERIAL	GOVT SPEC	COML SPEC	STOCK SIZE	PROCESS SYM	FINISH NO.	ZONE
CL.	QTY PER ASSEMBLY																

CL. = CLEANLINESS LEVEL PER LSP14-0011

SYM OR NO.	PROCESS OR FINISH	GRUMMAN SPEC OR MILITARY SPEC	SYM OR NO.	PROCESS OR FINISH	GRUMMAN SPEC OR MILITARY SPEC	SYM OR NO.	PROCESS OR FINISH	GRUMMAN SPEC OR MILITARY SPEC

I & T: IDENTIFICATION AND TRACEABILITY IN ACCORDANCE WITH :
NONE

GRUMMAN AIRCRAFT ENGRG CORP, BETHPAGE, L. I., NEW YORK

SIZE	CODE IDENT NO.	
B	26512	LDW280-51834

SCALE NONE

SHEET 2.00

ENG 77.2 7-65

01

NAS 9-1100

NOTES

1. INCONEL KNITTED SLEEVING TO BE 6 TO 8 INCHES WHEN FLATTENED. WIRE TO BE .0035 TO .0045 INCH DIA. ROUND "INCONEL 600" ALLOY. KNIT PATTERN SQUARE TYPE, 5 TO 7 SQUARES PER INCH. WIRE MAY BE PURCHASED FROM MONTGOMERY METAL FABRIC CO., 59 CANAL ST., WINDSOR LOCKS, CONN. (CODE IDENT 94725)
2. WELD INCONEL KNITTED SLEEVING TO FOIL SHEET PER LDW280-17522.
3. NO TOOLING HOLE PERMITTED IN PARTS.
4. WELDED ASSEMBLIES MAY HAVE RANDOM WRINKLED APPEARANCE.

MANUFACTURING OPERATIONS UNLESS OTHERWISE SPECIFIED NOTES CHECKED √ APPLY TO THIS DWG.	
PART NUMBER AND ALL OTHER MARKINGS IN REGION MARKED ⊠ USE BOTH SIDES IF NECESSARY.	
FILLET AND INSIDE CORNER RADII TOLERANCES .016R TO .062R ± .010 .063R TO .250R ± .015 OVER .250R ± .030	
DEPTH SHOWN FOR TAPPED HOLES IS FULL THDS. 2-3 IMP THDS. BEYOND PERMISSIBLE.	
EXTERNAL THREAD LENGTH SHOWN INCLUDES 2 IMPERFECT THREADS MAX.	
DO NOT CADMIUM PLATE & PAINT HOLES OR SURFACES MARKED WITH DOUBLE ASTERISK.	
MISMATCH STEP OF ± .005 PERMISSIBLE DUE TO CHANGE OF CUTTERS AT INSIDE INTERSECTING SURFACES.	
DIAMETERS MARKED MUST BE CONCENTRIC WITHIN FULL INDICATOR READING	
HOLES MUST BE KEPT FREE OF CHROME PLATING SOLUTION.	
ALL DIMENSIONS SHOWN TO BE MET AFTER CADMIUM PLATING. THICKNESS OF PLATE .0003 MIN. TO .0005 MAX. MIN. THICKNESS TO BE .0002 ON THREADED AREAS. NO ALLOWANCE FOR PLATING IN HOLES	
125 SURFACE ROUGHNESS INCLUDING REAMED HOLES PER MIL-STD-10	
200 FOR ALL DRILLED HOLES	
REMOVE ALL BURRS. BREAK ALL EDGES .015-.031	
INSPECTION INFORMATION MINIMUM PERMISSIBLE AVERAGE EDGE DISTANCE MARKED IS	
SYMBOL f DENOTES SURFACE TO BE MACHINED	
UNLESS OTHERWISE SPECIFIED TOLERANCE ON FLANGES IS ± 1/32	
LENGTHS OF AN, NAS & MS AL ALY RIVETS SHORTER THAN 1 INCH ARE NOT SPECIFIED.	
TOLERANCE ON LOFTED DELINEATIONS IS	

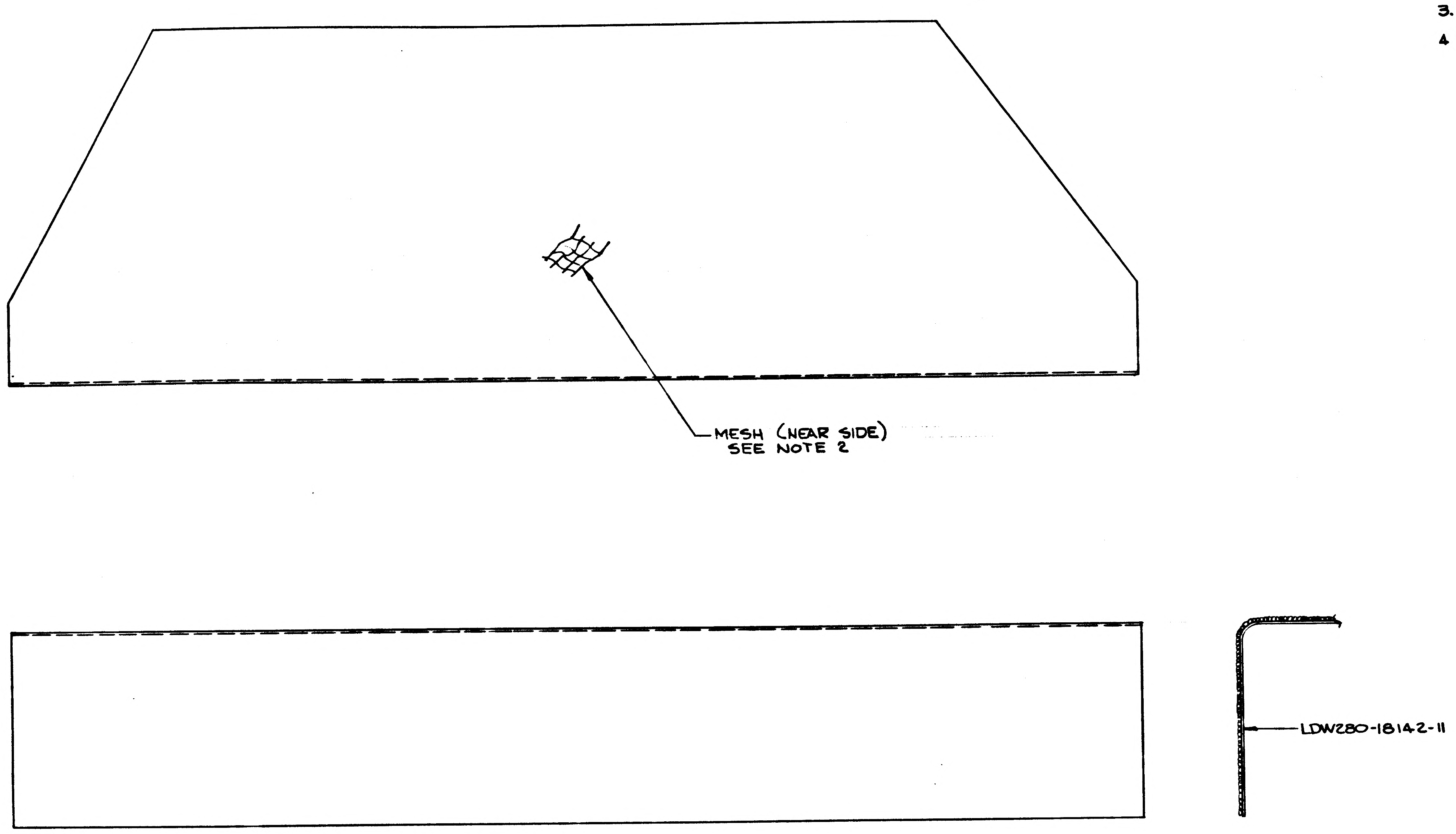

LDW280-51834-1 ASSY

LAYOUT RELEASE - TO BE REDRAWN
ON PRODUCTION FORMAT

GRUMMAN AIRCRAFT ENGRG CORP., BETHPAGE, L. I., NEW YORK			
SIZE F	CODE IDENT NO. 26512	LDW280-51834	
MODEL OR END ITEM LM	SCALE FULL		SHEET 3.00

LDW280-51834

LDW280-51834

01

NAS 9-1100

8

ENG 22.2 REV 3-66

GRUMMAN AIRCRAFT ENGINEERING CORP.
CODE IDENT NO. 26512
ENGINEERING ORDER EMF-A

DWG. NO. LEO 280 | EO NO. 421
CONTROL INFO NO. LDW280A-4411

ON THE FOLLOWING DRAWINGS ADD NOTE *

DRAWING NO.	EFF	CHANGE NUMBER	TITLE
			SEE DWG
LDW280-28730	LTA8 LM-1 THRU LM6	B2	
LDW280-28734	"	A8	
LDW280-28735	"	C3	
LDW280-28796	LTA8 (18) LM-1 (31) THRU LM-15(45)	B3	
LDW280-28747	LTA8 (18) LM-1 (31) THRU LM-6(36)	B1	
LDW280-28749	"	A7	
LDW280-28750	"	B3	
LDW280-28752	"	B2	
LDW280-28753	"	A3	
LDW280-28755	LTA8 (18) LM-1 (31)	A7	
LDW280-28756	LTA8(18) LM-1(31) THRU LM-15(45)	A6	
LDW280-28759	LTA8(18) LM-1(31) THRU LM-6(36)	B2	
LDW280-28760	"	B1	
LDW280-28768	LM-1(31)	B2	
LDW280-28769	LM-1(31)	B1	
LDW280-28771	LTA8(18) LM-1(31) THRU LM-6(36)	B2	
LDW280-28772	"	B1	
LDW280-28774	"	A7	
LDW280-28775	"	B2	
LDW280-28803	"	A2	
LDW280-28805	"	A1	
LDW280-51824	LM-1(31) THRU LM-15(45)	A1	
LDW280-51825	"	A2	
LDW280-51829	"	A1	
LDW280-51830	"	A1	
LDW280-51834	"	A1	SEE DWG

* MANUFACTURED PARTS TO COMPLY WITH REQUIREMENTS OF LPC 280-19

2

DETAIL SPEC REQ		CL II ENGRG CHG		CL I ENGRG CHG		

REASON FOR EO: LPC 280-19 PROVIDES COMPLETE FABRICATION AND INSPECTION INFO

DESCRIPTION OF EO: ADDED NOTE *

GAEC EO RELEASE: K 12/20

MODEL	PROCURING ACTIVITY NO.	GAEC UNIT NO.	SUB CONTR UNIT NO.
LM		NOTED	

DRAWING CHANGE REQD: ✓ REVISE DWG | RECORD EO

DISPOSITION OF PARTS: NOT REQ'D | REWORK | SCRAP

APPROVED BY								
DATE	12/16/66	12/16/66		12/14/66	12/14/66		12/20	12-20-66
1	VDI	~~SUPPORT~~ THERMO	RELIAB. GROUP	GROUP LEADER	STRESS GROUP	LIAISON ENGRG	PROJ ENGRG	~~GOVT~~

PRIORITY: C
DRAWING TITLE: NOTED
DRAWING NO.: LEO 280
EO NO.: 421

ISSUED BY T. AMBROSIO/STRAKOSCH X1153 SECTION VEH DES INT GROUP NO. 335 PL 35

01
NAS 9-1100

C

ENG 32.1 REV 3-65

GRUMMAN AIRCRAFT ENGINEERING CORP.
CODE IDENT NO. 26512
ENGINEERING ORDER

DWG. NO. LEO280
EO NO. 757
CONTROL INFO NO. LDW280A 9695

FOR THE NOTED DWGS, REVISE EFFECTIVITY AS SHOWN:

DWG NO.	DASH NO. ▲	DWG TITLE	EFF (NOW) ■	EFF (WAS) ●	CHANGE NO.
LDW280-51833 ✓	-5	SHIELD ASSY D/S QUAD I PLUME IMPINGEMENT	LM-1 (31) & LM-2 (32)	LM-1(31) THRU LM-15(45)	A4
-51833 ✓	-7	SHIELD ASSY D/S QUAD III PLUME IMPINGEMENT	LM-1 (31) & LM-2 (32)	LM-1(31) THRU LM-3(33)	
-51834 ✓	-1	FOIL ASSY D/S QUAD I & III ~SCREW PROTECTION	LM-1 (31) & LM-2 (32)	LM-1(31) THRU LM-15 (45)	A2
-18141	-13	SKIN D/S QUAD I PLUME IMPINGEMENT ~SCREW PROTECTION	LM-1 (31) & LM-2 (32)	LM-1(31) THRU LM-15 (45)	A4
LDW280-18142	-11	FOIL D/S QUAD I & III PLUME IMPINGEMENT SCREW PROTECT.	LM-1 (31) & LM-2 (32)	LM-1(31) THRU LM-15 (45)	A1

Ⓡ

DETAIL SPEC REQ	☐	CL II ENGRG CHG	☐	CL I ENGRG CHG	☑ LCD 1244

REASON FOR EO: TO PROVIDE FOR FITH SHIELD

DESCRIPTION OF EO: RESTRICTED DASH NO. (▲) TO (■) WAS (●)

GAEC EO RELEASE: JK 10/18/67

MODEL	PROCURING ACTIVITY NO.	GAEC UNIT NO.	SUB CONTR UNIT NO.
LM		LM3 (33) THRU	
LM		LM-15 (45)	

DRAWING CHANGE REQD: REVISE DWG ✓ RECORD EO
DISPOSITION OF PARTS: REWORK SCRAP ✓

			SUPPORT	RELIAB. GROUP	GROUP LEADER	STRESS GROUP	LIAISON ENGRG	PROJ ENGRG	GOVT
APPROVED BY									
DATE	10/17/67				10/17/67	10/17/67		10/17/67	10-18-67
	P	V.D.I.							

PRIORITY: C
DRAWING TITLE: NOTED ABOVE
DRAWING NO.: LEO 280-
EO NO.: 757

CDR 10-27-67
ISSUED BY DON THOMAS / STRAKOSCH SECTION V.D.I. x 1153 GROUP NO. 335 PL 25

01

NAS 9-1100

LDW280-51836 A

MODEL OR END ITEM	NEXT ASSY	MODULE OR SER NO.	REQD PER MODULE OR END ITEM
LM	LDW280-53000	LM-3 (33) K	1
LM	LDW280-52000	LM-2 (32) K	1
LM	LDW280-51000	LM-1 (31) K	1

PART NO. LDW280-51836-5

GAEC SCH NO.

MODEL OR END ITEM	NEXT ASSY	MODULE OR SER NO.	REQD PER MODULE OR END ITEM
LM	LDW280-53509	LM-3 (33)	1EA
LM	LDW280-52509	LM-2 (32).	1EA

PART NO. LDW280-51836-3

GAEC SCH NO.

MODEL OR END ITEM	NEXT ASSY	MODULE OR SER NO.	REQD PER MODULE OR END ITEM
LM	LDW280-51509	LM-1 (31)	1

PART NO. LDW280-51836-1

GAEC SCH NO. 502

5

SH REV STATUS: FOR DESCRIPTION OF REV SEE SUBQ SH

SHEET	1.00	1.10	2.00	3.00	4.00	5.00			
REV	A	A	A	A	A	A			
SHEET									
REV									
SHEET									
REV									

LAST SECT LTR USED G

LAST DASH NO. USED -5

GRUMMAN REL INFO

PRIM NO.	JK(001)		
215	MP-14	A-6/30/7	

ENG 77.1 12-65

UNLESS OTHERWISE SPECIFIED DIMENSIONS ARE IN INCHES.
TOLERANCE UNLESS SPECIFIED
FRACTIONS - DECIMALS – ANGLES
±1/32 ±.020 ±1/2°

ORIG DWG AUTH
DETAIL SPEC REQUIREMENT
CLASS II ENGRG CHANGE
CLASS I ENGRG CHANGE

CONTRACT NO. NAS 9-1100
LINE ITEM # 1
DOCUMENTATION TYPE II

DRAWN BY E.SICK 11-15-66
LAYOUT BY B.MANOS 11-18-66
CHECKED BY H.RODALEWICZ 11-16-66
GR LEADER [illegible] 11/30
VEHDESINT
STRUCTURE [illegible] 11/30
STRUCTURE
WEIGHTS
RELIABILITY
PROJ ENGR [illegible] 11/30
REL GROUP [illegible] 11-30-66

GRUMMAN AIRCRAFT ENGRG CORP
BETHPAGE, L. I., NEW YORK

SUPPORT INSTL
DESCENT STAGE-FITH
INSTRUMENTATION

SIZE B
CODE IDENT NO. 26512
LDW280-51836 A Ⓐ
SCALE NONE
SHEET 1.00 OF 6

CDR 11-28-66

01

NAS 9-1100

REVISIONS

CHANGE LTR	ITEM NO.	SHEET NO.	ZONE	GRUMMAN INFO ONLY	DET SPEC	CLASS I	CLASS II	ENGRG ORDER	DESCRIPTION	EFFECTIVITY	DISPOSITION OF EXISTING PARTS		CHANGED BY AND DATE	ENGRG APPD	[illegible] APPD
											REWORK	SCRAP			
									ADDED SH 4 WAS PART OF SH3, NEW SH3 "B" SIZE WAS "F"						
A	1	1.10, 4.00						E.O. A1	ON-3 B/M & FIELD REMOVED MS20470DD4(2) IN FLD ADDED WIEW G-G; LOCATION NOTE & FLUSH BOTH SIDE WITH DD4 RIVET STOCK. ADDED SH 1.10	LM-2 LM-3	✓		J. BOHUN 6-29-67		6-30-67
	2	1.10 & 4.00						EO A2	ON-3 SECT C-C ADDED ± 3/32 TOLERANCE TO 1/4 & 3 1/16 DIM'S	LM-1 & LM-2	NOT	REQD			
	3	1.10 & 5.00						EO A3	ON-1&3 ADDED E19 (.165-.171) HOLE TO LDW280-51836-1 INSTL.	LM-1	✓				
	4								ADDED -5 INSTL TO MOD BLK	LM-1 (31) K LM-2 (32) K LM-3 (33) K	✓				
	5								ADDED -5 INSTL, LSC320-314-19-1, LSC320-314-21 & LDW280P10871-11, & MS21034-04(2)						
	6								ADDED SEE DETAIL "F" FOR -5 INSTL SH5						
	7								Ⓐ ADDED NOTES 3 & 4						

FOR CONTINUATION OF REVISIONS SEE SHEET ________

GRUMMAN AIRCRAFT ENGRG CORP, BETHPAGE, L. I., NEW YORK

SIZE	CODE IDENT NO.		
B	26512	LDW280-51836	A Ⓐ
SCALE NONE		SHEET 1.10	

ENG 77.3 5-66

01

NAS 9-1100

QTY PER ASSEMBLY -5	-3	-1	CODE IDENT	PART NO.	I&T	NOMENCLATURE OR DESCRIPTION	MATERIAL	GOVT SPEC	COML SPEC	STOCK SIZE	PROCESS SYM	FINISH NO.	ZONE
	AS REQD	AS REQD		SHIM		SEE NOTE 2							
AS REQD				LDW280P10871-11		TAPE	SEE DWG						
	1	1		M21042L06	E	NUT	STD PART						
				M20470B4		RIVET							
				MS20470B3		RIVET							
				MS20470AD5		RIVET							
				MS20470AD4		RIVET							
2				MS21043-04		NUT							
	2	2		AN960D6L		WASHER							
	1	1		AN503-6-4		SCREW	STD PART						
	4	4		GB512H-08		COLLAR	GRUMMAN STD						
	4	4		GB511K-08-2		PIN	GRUMMAN STD						
	1	1		LDW280P18167-1		SUPPORT ASSY	SEE DWG						
	1	1		LDW280M17699-11		FITTING							
	1	1		LDW280M11243-13		SPACER							
	1	1		LDW280M11242-11		SWIVEL	SEE DWG						
2				LSC320-314-21		ADAPTER RET. ASSY	SEE NOTE 4						
1				LSC320-314-19-1		CLAMP ASSY	SEE NOTE 4						
	1			LDW280-11700-17		ZEE	SEE DWG						
		1		LDW280-11700-15		ZEE	SEE DWG						
	1	1		LDW280-11700-13		VEE	SEE DWG						
				LDW280-51836-5		CONNECTOR INSTL							
				LDW280-51836-3		SUPPORT INSTL					NONE	NONE	
				LDW280-51836-1	E	SUPPORT INSTL					NONE	NONE	

SYM OR NO.	PROCESS OR FINISH	GRUMMAN SPEC OR MILITARY SPEC	SYM OR NO.	PROCESS OR FINISH	GRUMMAN SPEC OR MILITARY SPEC	SYM OR NO.	PROCESS OR FINISH	GRUMMAN SPEC OR MILITARY SPEC
						88	ANODIZE	LSP 14-9030

I&T: IDENTIFICATION AND TRACEABILITY IN ACCORDANCE WITH : NONE

GRUMMAN AIRCRAFT ENGRG CORP, BETHPAGE, L. I., NEW YORK

SIZE	CODE IDENT NO.		
B	26512	LDW280-51836	A Ⓐ

SCALE NONE SHEET 2.00

ENG 77.2 7-65

01

NAS 9-1100

NOTES:

1. INSTALL FASTENERS PER LSP14-15302 & LSP14-15306.
2. SHIM AS REQUIRED USING AL ALLOY SHEET 2024-T3, QQ-A-250/4 FINISH #88.
3. MATING PROCEDURE FOR F.I.T.H. CONNECTOR SET
    a. ASCENT PLUG LANYARD SHOULD BE DISCONNECTED FROM ASCENT STAGE PIVOT AT PT. A.
    b. ASCENT PLUG WIRE BUNDLE MAY BE DISCONNECTED FROM ASCENT STAGE AT PT. B.
    c. DISCONNECT DESCENT LANYARD FROM DESCENT STAGE PIVOT AT PT. C.
    d. DESCENT WIRE BUNDLE MAY BE DISCONNECTED FROM DESCENT STAGE AT PT. D.
    e. INSPECT SOCKET OF DESCENT STAGE PLUG (LSC320-314-15 REF.) TO MAKE SURE THAT THE PERIPHERAL SEAL ("O" RING) IS STILL IN PLACE. IF NOT, INSTALL ITT CANNON #990-000-699 OR EQUIV. PER ITTCANNON DWG GM102441Y.
    f. ON THE DESCENT STAGE PLUG, PUSH OUTER COUPLING RING OVER THE INTERNALLY THREADED TANGS AS FAR AS IT WILL GO.
    g. INSPECT THE LSC320-314-17 ADAPTER RECEPTACLE TO MAKE SURE THAT ANY TAPE ON IT IS REMOVED.
    h. MATE THE LSC320-314-17 ADAPTER RECEPTACLE TO THE LSC320-314-15 DESCENT STAGE PLUG BY ALIGNING THE KEYWAYS, INSERTING THE ELECTRICAL CONTACTS AND THEN ROTATING THE OUTER COUPLING RING UNTIL THE THREADED TANGS ENGAGE THE ADAPTER RECEPTACLE THREADS. COMPLETE FULL THREAD ENGAGEMENT BY TORQUING THE OUTER COUPLING RING TO A VALVE OF 80±5 IN LBS. WITH AN LDW420-83215 WRENCH ASSY AND AN LDW420-83211 HOLDING TOOL OR EQUIVALENT.
    j. INSPECT SOCKET OF ASCENT STAGE PLUG (LSC320-314-13) TO MAKE SURE THAT THE PERIPHERAL ("O" RING) IS STILL IN PLACE. IF NOT, INSTALL ITT CANNON # 990-000-699 OR EQUIV, PER ITT CANNON DWG GM102441Y.
    k. ON THE ASCENT STAGE PLUG, PUSH THE OUTER COUPLING RING OVER THE INTERNALLY THREADED TANGS AS FAR AS IT WILL GO.
    l. MATE THE LSC320-314-13 ASCENT STAGE PLUG TO THE LSC320-314-17 ADAPTER RECEPTACLE BY ALIGNING THE KEYWAYS, INSERTING THE ELECTRICAL CONTACTS AND THEN ROTATING THE OUTER COUPLING RING UNTIL THE THREADED TANGS ENGAGE THE ADAPTER RECEPTACLE THREADS. COMPLETE FULL THREAD ENGAGEMENT BY TORQUING THE OUTER COUPLING RING TO A VALUE OF 80±5 IN.-LBS. WITH AN LDW420-83215 WRENCH ASSEMBLY AND AN LDW420-83211 HOLDING TOOL OR EQUIV.
    m. 1. INSTALL THE LSC320-314-19-1 CLAMP ASSY ON THE LSC320-314-17 ADAPTER RECEPTACLE SO THAT IT'S PARTING PLANE IS APPROXIMATELY MIDWAY BETWEEN THE TWO CLOSEST LANYARD TERMINALS, ONE BEING ON THE DESCENT STAGE PLUG AND THE OTHER LOCATED ON THE ASCENT STAGE PLUG.
        2. THE TWO TANGS ON THE LSC320-314-19-1 CLAMP ASSY. MUST ENGAGE SLOTS BETWEEN THE TANGS ON THE ASCENT & DESCENT STAGE PLUGS. IT IS PERMISSABLE TO BACK OFF AND THEN RE-TORQUE ON EITHER THE ASCENT OR DESCENT STAGE PLUG IN ORDER TO ACHIEVE ENGAGEMENT WITH BOTH CLAMP TANGS.
    n. WITH THE CLAMP ORIENTATION ACHIEVED PER NOTE M1 & M2 , ATTACH THE LARGE BARRELS OF THE LSC320-314-21 ADAPTER RETAINER ASSYS TO THE LSC320-314-19-1 CLAMP ASSY (2 PLACES) WITH THE EXISTING NAS1352C-06H6 SCREWS. DO NOT LOCK WIRE SCREW HEADS. TORQUE SCREWS TO 10-12 IN.-LBS.
    p. ATTACH THE SMALL BARRELS OF THE LSC320-314-21 ADAPTER RETAINER ASSYS TO THE DESCENT STAGE CABLE RELIEF CLAMP USING THE EXISTING #4-40 SCREWS (2 PLACES) AND MS21043-04 NUTS (2 REQD). DO NOT LOCK WIRE SCREW HEADS. THE TWO ADAPTER RETAINER ASSYS MUST NOT BE CRISS-CROSSED.
    q. REMOVE ANY PLASTIC ANTI-CHAFING SLEEVES THAT MAY BE COVERING THE ASCENT OR DESCENT STAGE LANYARDS.
    r. LACE THE DESCENT STAGE LANYARD TO THE DESCENT STAGE WIRE BUNDLE USING A TOTAL OF 8 LACES EQUALLY SPACED, THE FIRST BEING 6±1 IN. FROM THE FRONT END OF THE PLUG AND THE LAST LACE LOCATED 10 TO 12 INCHES FROM THE LANYARD PIVOT CENTER LINE. THE LANYARD MUST NOT BE TWISTED AROUND THE WIRE BUNDLE.
    s. INSTALL THE DESCENT STAGE LACED WIRE BUNDLE & LANYARD IN THE CANNISTER SO THAT THE WIRE BUNDLE FORMS TWO COMPLETE LOOPS AND THE LANYARD FORMS ONE COMPLETE LOOP. THE LENGTH OF THE WIRE BUNDLE FROM THE CANNISTER (PT. E) SHOULD BE AT LEAST 4" LONGER THAT THE DESCENT LANYARD.
    t. RECLAMP IF REQ'D, DESCENT WIRE BUNDLE TO DESCENT STAGE AT PT. D
    u. RE-CONNECT DESCENT LANYARD TO DESCENT STAGE PIVOT AT PT. C.
    v. RECONNECT ASCENT PLUG LANYARD TO ASCENT STAGE PIVOT AT PT. A.
    w. RE-CLAMP IF REQ'D ASCENT WIRE BUNDLE TO THE ASCENT STAGE AT PT. B. THE LENGTH OF THE ASCENT STAGE WIRE BUNDLE FROM THE END OF THE ASCENT STAGE PLUG TO THE CLAMP AT PT. B SHOULD BE AT LEAST 4½" LONGER THAN THE ASCENT STAGE LANYARD.
    x. RE-INSPECT THE OUTER COUPLING RINGS ON BOTH THE ASCENT & DESCENT STAGE PLUGS TO MAKE SURE THAT THEY HAVE NOT BEEN INADVERTENTLY SNAPPED BACK.
    y. PLACE THE MATED CONNECTOR SET IN THE VEE RECEPTACLE WITH THE ASCENT STAGE PLUG FACING THE CANNISTER. THE PARTING PLANE OF THE LSC320-314-19-1 CLAMP ASSY.MUST BE PARALLEL TO THE DECK.
    z. IT IS NECESSARY TO APPLY THERMAL TAPE TO THE EXTERIOR OF THE LSC320-314-19-1 CLAMP ASSY. ~~AND TO EXTERNAL PORTIONS OF THE ASCENT OR DESCENT STAGE PLUGS, HOWEVER,~~ CARE MUST BE EXERCISED NOT TO TAPE ANYONE OF THE THREE NOTED PARTS TO EACH OTHER.
    aa. THE INSTRUCTIONS NOTED IN NOTES j THRU z MAY BE PERFORMED IN ANY SEQUENCE THAT IS FEASABLE.
4. FOR COMMERCIAL PARTS, SEE SPEC. CONTROL DRAWING BEFORE ORDERING.

GRUMMAN AIRCRAFT ENGRG CORP., BETHPAGE, L. I., NEW YORK

SIZE	CODE IDENT NO.		
B	26512	LDW280-51836	A Ⓐ
SCALE		SHEET 3.00	

ENG 73.1 6-64

01

NAS 9-1100

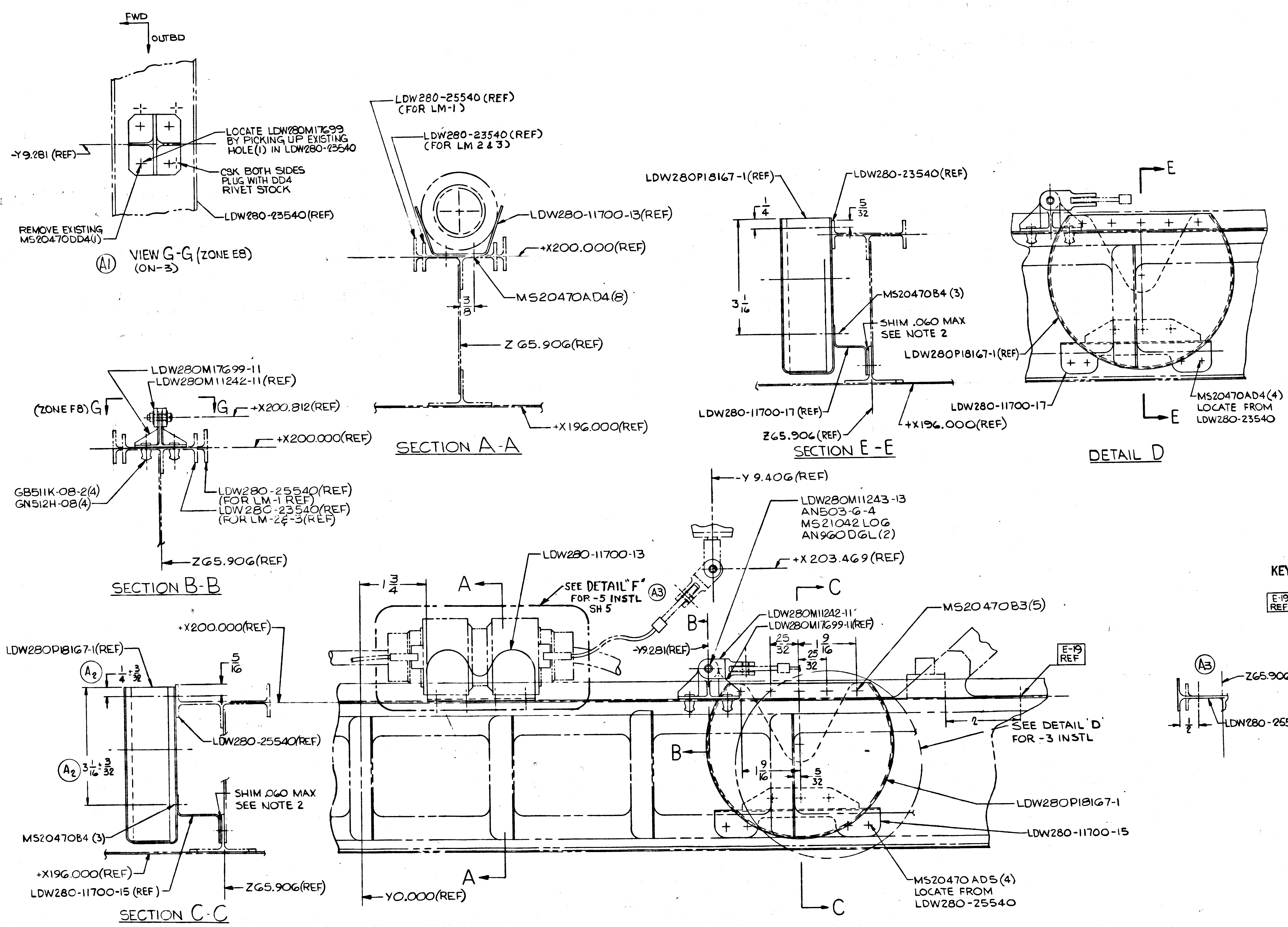
FWD
OUTBD
LOCATE LDW280M17699 BY PICKING UP EXISTING HOLE(1) IN LDW280-23540
-Y9.281 (REF)
CSK BOTH SIDES PLUG WITH DD4 RIVET STOCK
LDW280-23540(REF)
REMOVE EXISTING MS20470DD4(1)
A1
VIEW G-G (ZONE E8) (ON-3)
LDW280-25540 (REF) (FOR LM-1)
LDW280-23540 (REF) (FOR LM 2 & 3)
LDW280-11700-13(REF)
+X200.000(REF)
MS20470AD4(8)
3/8
Z 65.906(REF)
+X196.000(REF)
SECTION A-A
LDW280P18167-1(REF)
LDW280-23540(REF)
1/4
5/32
3 1/16
MS20470B4 (3)
SHIM .060 MAX SEE NOTE 2
LDW280-11700-17 (REF)
Z65.906 (REF)
+X196.000(REF)
SECTION E-E
E
LDW280P18167-1(REF)
LDW280-11700-17
MS20470AD4(4) LOCATE FROM LDW280-23540
E
DETAIL D
LDW280M17699-11
LDW280M11242-11(REF)
(ZONE F8) G
G
+X200.812(REF)
+X200.000(REF)
GB511K-08-2(4)
GN512H-08(4)
LDW280-25540(REF) (FOR LM-1 REF)
LDW280-23540(REF) (FOR LM-2&-3(REF)
Z65.906(REF)
SECTION B-B
-Y 9.406(REF)
LDW280M11243-13
AN503-6-4
MS21042L06
AN960D6L(2)
+X 203.469 (REF)
LDW280-11700-13
1 3/4
A
SEE DETAIL "F" FOR -5 INSTL SH 5
A3
B
C
-Y9.281(REF)
LDW280M11242-11
LDW280M17699-11(REF)
25/32
25/32
1 9/16
MS20470B3(5)
E-19 REF
2
SEE DETAIL 'D' FOR -3 INSTL
B
1 9/16
5/32
LDW280P18167-1
LDW280-11700-15
MS20470AD5(4) LOCATE FROM LDW280-25540
A
C
Y0.000(REF)
+X200.000(REF)
LDW280P18167-1(REF)
A2
1/4 ± 3/32
5/16
LDW280-25540(REF)
A2
3 1/16 ± 3/32
SHIM .060 MAX SEE NOTE 2
MS20470B4 (3)
+X196.000(REF)
LDW280-11700-15 (REF)
Z65.906(REF)
SECTION C-C
A3
Z65.906(REF)
LDW280-25540-1 (REF)
1/2

LDW280-51836-1 INSTL
-3 INSTL IDENTICAL TO -1
EXCEPT AS NOTED
SEE DETAIL D

VIEW LOOKING AFT

MANUFACTURING OPERATIONS UNLESS OTHERWISE SPECIFIED NOTES CHECKED ✓ APPLY TO THIS DWG.	
PART NUMBER AND ALL OTHER MARKINGS IN REGION MARKED ⊠ USE BOTH SIDES IF NECESSARY.	
FILLET AND INSIDE CORNER RADII TOLERANCES .016R TO .062R ± .010 .063R TO .250R ± .015 OVER .250R ± .030	
DEPTH SHOWN FOR TAPPED HOLES IS FULL THDS. 2-3 IMP. THDS. BEYOND PERMISSIBLE	
EXTERNAL THREAD LENGTH SHOWN INCLUDES 2 IMPERFECT THREADS MAX.	
DO NOT CADMIUM PLATE & PAINT HOLES OR SURFACES MARKED WITH DOUBLE ASTERISK.	
MISMATCH STEP OF ± .005 PERMISSIBLE DUE TO CHANGE OF CUTTERS AT INSIDE INTERSECTING SURFACES.	
DIAMETERS MARKED MUST BE CONCENTRIC WITHIN FULL INDICATOR READING	
HOLES MUST BE KEPT FREE OF CHROME PLATING SOLUTION.	
ALL DIMENSIONS SHOWN TO BE MET AFTER CADMIUM PLATING. THICKNESS OF PLATE .0003 MIN TO .0005 MAX. MIN THICKNESS TO BE .0002 ON THREADED AREAS. NO ALLOWANCES FOR PLATING IN HOLES	
125 √ SURFACE ROUGHNESS INCLUDING REAMED HOLES PER MIL-STD-10	
200 √ FOR ALL DRILLED HOLES	
REMOVE ALL BURRS. BREAK ALL EDGES .015-.031	
INSPECTION INFORMATION MINIMUM PERMISSIBLE AVERAGE EDGE DISTANCE MARKED IS	
SYMBOL √ DENOTES SURFACE TO BE MACHINED	
UNLESS OTHERWISE SPECIFIED TOLERANCE ON FLANGES IS ± 1/32	
LENGTHS OF AN, NAS & MS AL ALY RIVETS SHORTER THAN 1 INCH ARE NOT SPECIFIED	
TOLERANCE ON LOFTED DELINEATIONS IS	

KEY TO PURPOSE OF HOLES, ETC., MARKED REF.

E-19 REF ELECTICAL .165-.171(#19 DRILL)

GRUMMAN AIRCRAFT ENGRG CORP. BETHPAGE, L. I., NEW YORK
SIZE F
CODE IDENT NO. 26512
LDW280-51836
A
LM
MODEL OR END ITEM
SCALE FULL
SHEET 4.00

ENG 73-5 6-64

01

NAS 9-1100

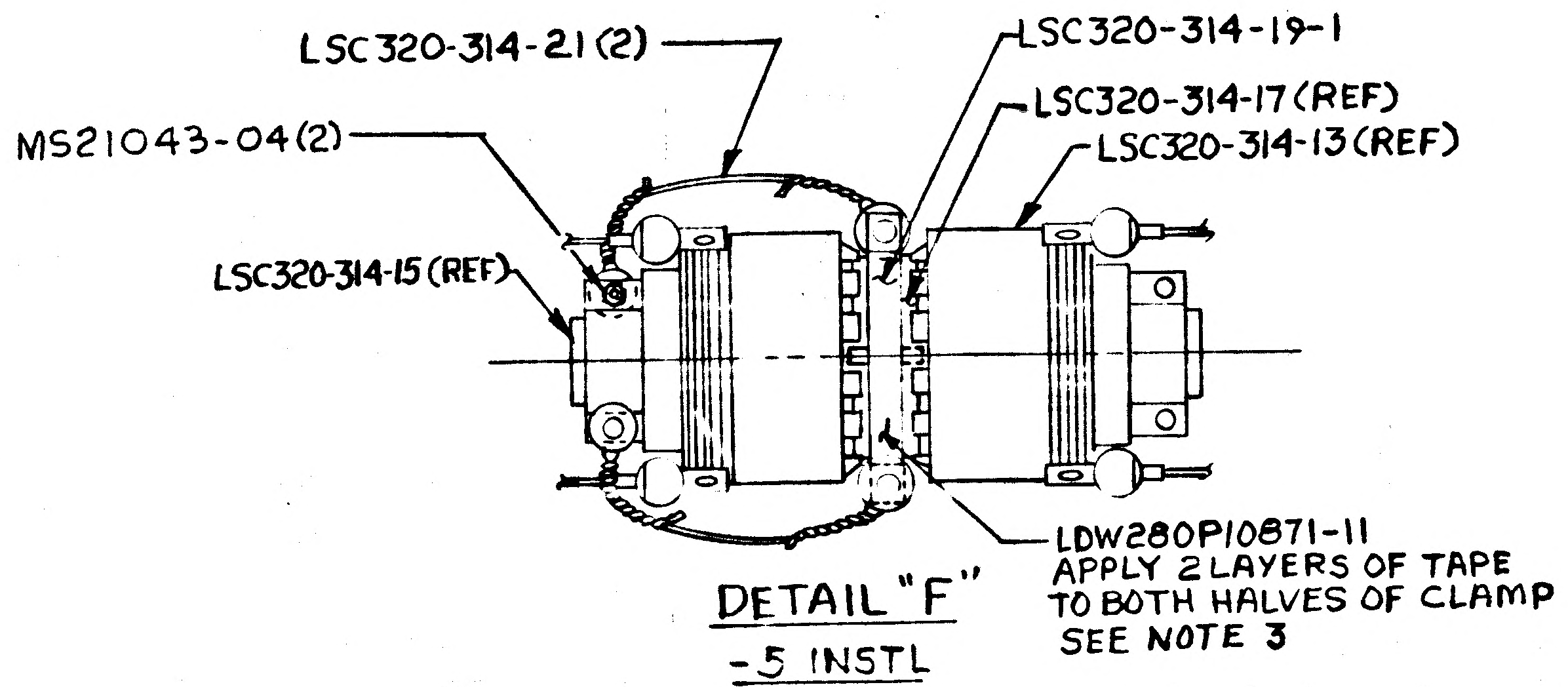
LSC320-314-21 (2)
MS21043-04 (2)
LSC320-314-15 (REF)
LSC320-314-19-1
LSC320-314-17 (REF)
LSC320-314-13 (REF)
LDW280P10871-11
APPLY 2 LAYERS OF TAPE
TO BOTH HALVES OF CLAMP
SEE NOTE 3

DETAIL "F"
-5 INSTL
ROTATED

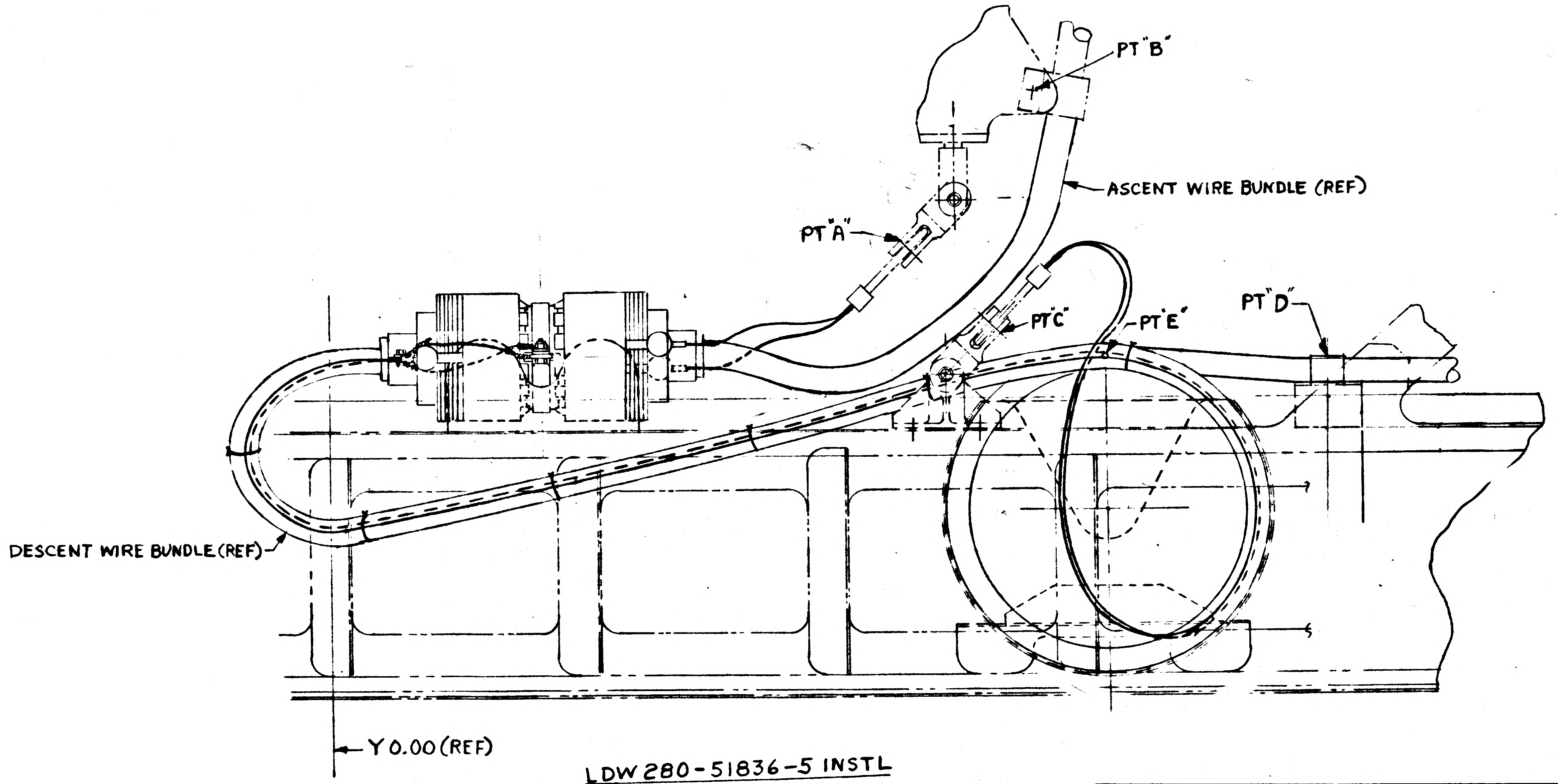
PT "B"
ASCENT WIRE BUNDLE (REF)
PT "A"
PT "C"
PT "E"
PT "D"
DESCENT WIRE BUNDLE (REF)
Y 0.00 (REF)

LDW 280-51836-5 INSTL
(ON -1 & -3 INSTL)
SEE NOTE 3 FOR INSTL PROCEDURE

01

NAS 9-1100

MANUFACTURING OPERATIONS
UNLESS OTHERWISE SPECIFIED
NOTES CHECKED √ APPLY TO THIS DWG.

PART NUMBER AND ALL OTHER MARKINGS IN REGION MARKED ⊠ USE BOTH SIDES IF NECESSARY.

FILLET AND INSIDE CORNER RADII TOLERANCES
.016R TO .062R ± .010
.063R TO .250R ± .015
OVER .250R ± .030

DEPTH SHOWN FOR TAPPED HOLES IS FULL THDS. 2-3 IMP THDS. BEYOND PERMISSIBLE.

EXTERNAL THREAD LENGTH SHOWN INCLUDES 2 IMPERFECT THREADS MAX.

DO NOT CADMIUM PLATE & PAINT HOLES OR SURFACES MARKED WITH DOUBLE ASTERISK.

MISMATCH STEP OF ± .005 PERMISSIBLE DUE TO CHANGE OF CUTTERS AT INSIDE INTERSECTING SURFACES.

DIAMETERS MARKED MUST BE CONCENTRIC WITHIN FULL INDICATOR READING

HOLES MUST BE KEPT FREE OF CHROME PLATING SOLUTION.

ALL DIMENSIONS SHOWN TO BE MET AFTER CADMIUM PLATING. THICKNESS OF PLATE .0003 MIN. TO .0005 MAX. MIN. THICKNESS TO BE .0002 ON THREADED AREAS. NO ALLOWANCE FOR PLATING IN HOLES

125 √ SURFACE ROUGHNESS INCLUDING REAMED HOLES PER MIL-STD-10

200 √ FOR ALL DRILLED HOLES

REMOVE ALL BURRS. BREAK ALL EDGES .015-.031

INSPECTION INFORMATION MINIMUM PERMISSIBLE AVERAGE EDGE DISTANCE MARKED IS

SYMBOL √ DENOTES SURFACE TO BE MACHINED

UNLESS OTHERWISE SPECIFIED TOLERANCE ON FLANGES IS ± 1/32

LENGTHS OF AN, NAS & MS AL ALY RIVETS SHORTER THAN 1 INCH ARE NOT SPECIFIED.

TOLERANCE ON LOFTED DELINEATIONS IS

GRUMMAN AIRCRAFT ENGRG CORP., BETHPAGE, L. I., NEW YORK

MODEL OR END ITEM	SIZE	CODE IDENT NO.		
LM	F	26512	LDW280-51836	A

SCALE
SHEET 5.00

LDW280-51836A

01
NAS 9-1100

ENG 32.2 REV 3-65

GRUMMAN AIRCRAFT ENGINEERING CORP.
CODE IDENT NO. 26512
ENGINEERING ORDER

DWG. NO. LDW280-51836		EO NO. A1
CONTROL INFO NO. LM-2-3145		

ON-3: ADD VIEW *-* & LOCATE LDW280M17699 AS SHOWN:

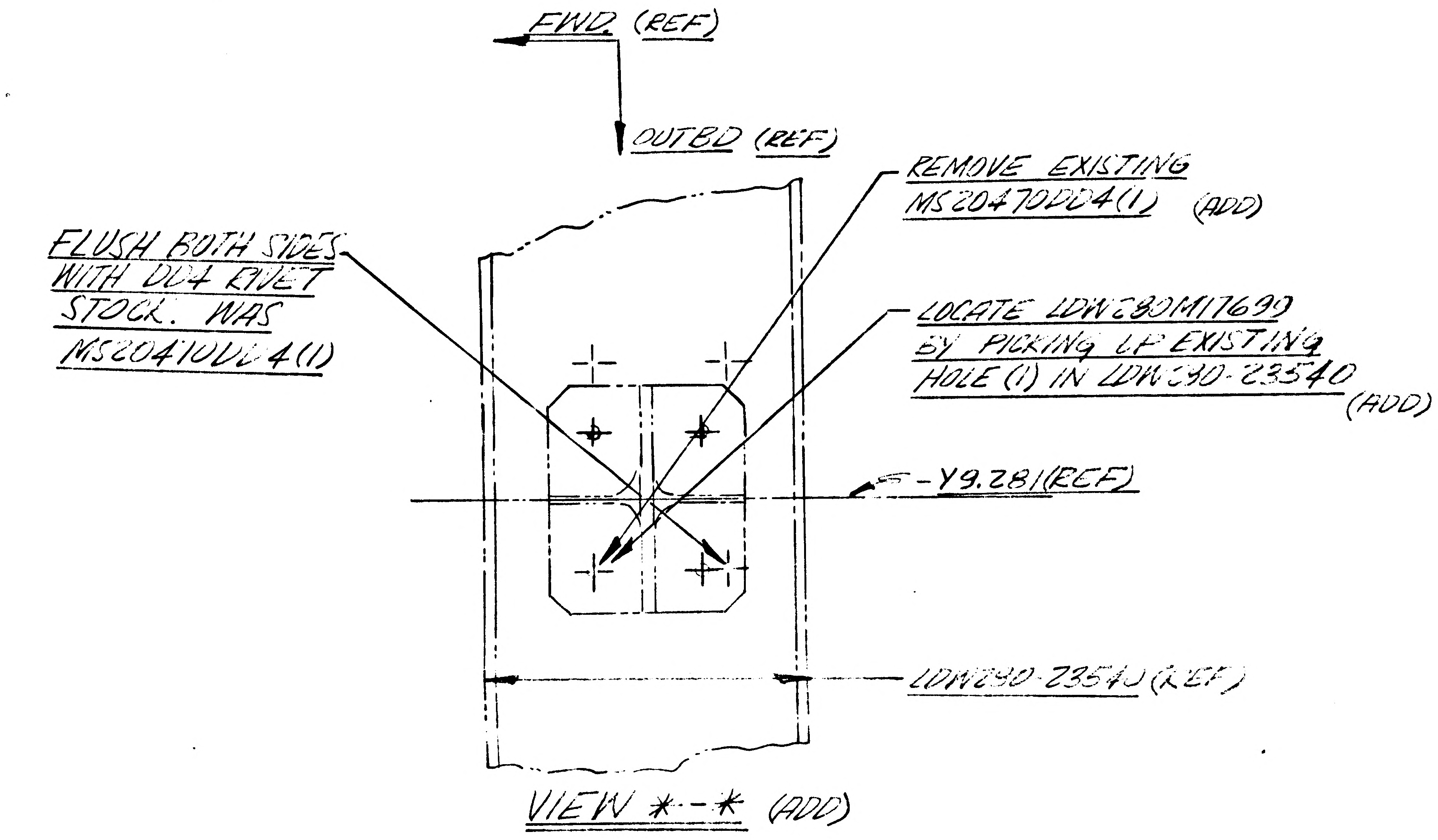
FWD (REF)
OUTBD (REF)
FLUSH BOTH SIDES WITH DD4 RIVET STOCK. WAS MS20410DD4(1)
REMOVE EXISTING MS20470DD4(1) (ADD)
LOCATE LDW280M17699 BY PICKING UP EXISTING HOLE (1) IN LDW280-23540 (ADD)
-Y9.281(REF)
LDW280-23540 (REF)
VIEW *-* (ADD)

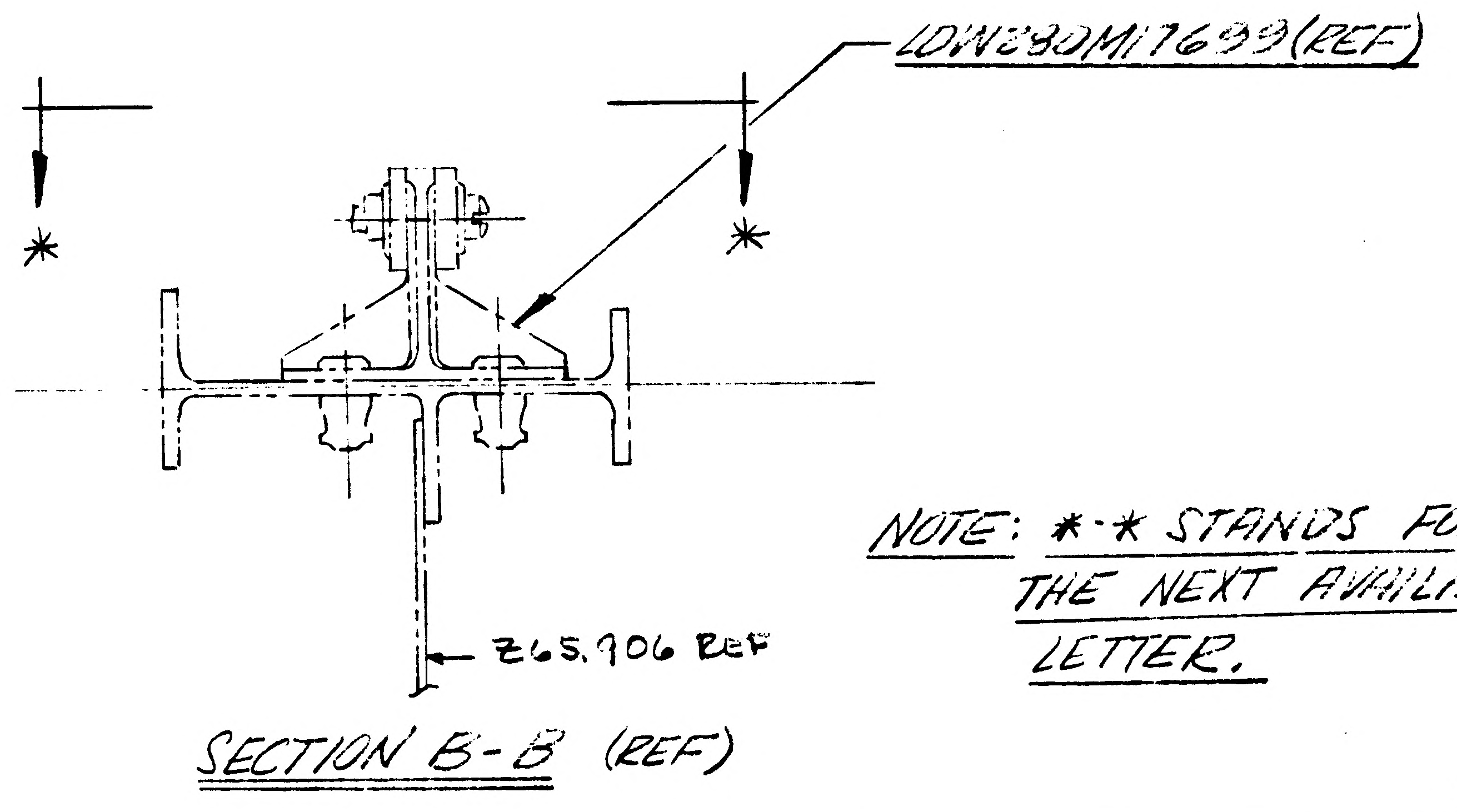
LDW280M17699(REF)
*
*
Z65.906 REF
SECTION B-B (REF)

NOTE: *-* STANDS FOR THE NEXT AVAILABLE LETTER.

2

DETAIL SPEC REQ		CL II ENGRG CHG		CL I ENGRG CHG										
REASON FOR EO				DESCRIPTION OF EO										GAEC EO RELEASE C
FITTING LOCATION WAS OMITTED FROM DRAWING				ON-3 IN B/M & F/D: REMOVED MS20470DD4(2). IN F/D: ADDED VIEW *-*; LOCATION NOTE & "FLUSH BOTH SIDES WITH DD4 RIVET STOCK."										12 DEORS
MODEL	EFFECTIVITY			DRAWING CHANGE REQD		DISPOSITION OF PARTS		APPROVED BY				M.A	CL	
	PROCURING ACTIVITY NO.	GAEC UNIT NO.	SUB CONTR UNIT NO.					DATE				12/21/66	12/21/66	12/27
				✓ REVISE DWG	RECORD EO	✓ REWORK	SCRAP	— / —	VD1	SUPPORT	RELIAB. GROUP	GROUP LEADER	STRESS GROUP	LIAISON ENGRG
LM		LM-2 (32)		PRIORITY	DRAWING TITLE							DRAWING NO.		EO NO.
LM		LM-3 (33)		C	SUPPORT INSTL. DESCENT STAGE ~ FITH INSTRUMENTATION							LDW280-51836		A1

PROJ ENGRG 12/22/66; ~~GOVT~~

ISSUED BY / E. NEFF X3604 12-21-66 SECTION VEHICLE DESIGN INT. GROUP NO. 335 PL 35

B

ENG 32.1 REV 3-65

GRUMMAN AIRCRAFT ENGINEERING CORP.
CODE IDENT NO. 26512
ENGINEERING ORDER

DWG. NO. LDW280 51836		EO NO. A2
CONTROL INFO NO. LM 5-11602		

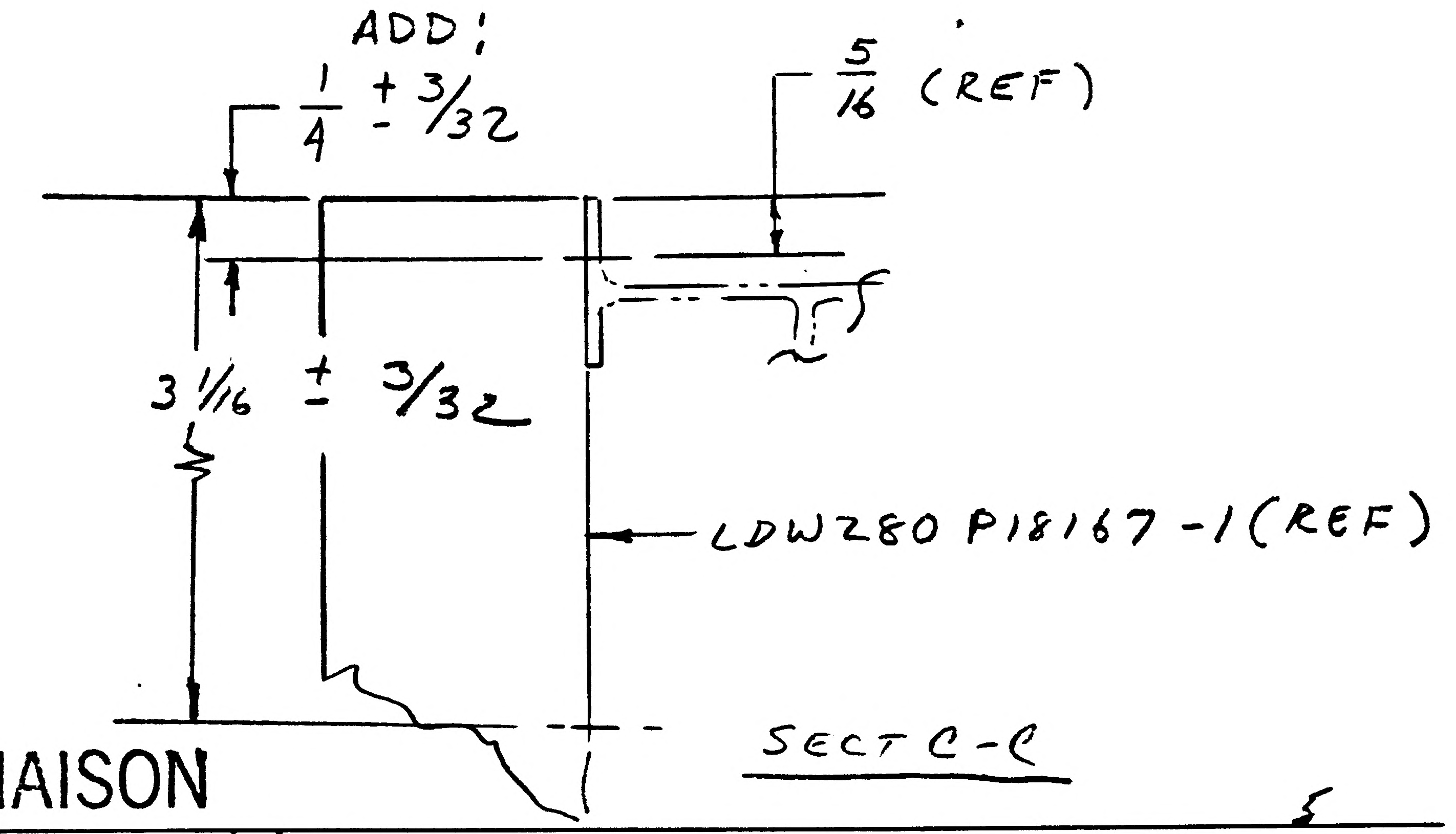

SECT C-C

RELEASED BY LIAISON

5

DETAIL SPEC REQ	☐	CL II ENGRG CHG	☐	CL I ENGRG CHG	☐

REASON FOR EO	DESCRIPTION OF EO	GAEC EO RELEASE
TO FACILITATE INSTL OF PART	ON-3 SECTION C-C ADDED ± 3/32 TOL TO 1/4 & 3 1/16 DIM'S.	C LE

MODEL	EFFECTIVITY		
	PROCURING ACTIVITY NO.	GAEC UNIT NO.	SUB CONTR UNIT NO.
LM		LM2 (32)	
LM		LM3 (33)	

DRAWING CHANGE REQD		DISPOSITION OF PARTS		APPROVED BY	WT			~		CH	RWC(E)	
✓		NOT REQD.		DATE	1/14/67			~	1-17-67	1-14-67	1-20-67	1-17-67
REVISE DWG	RECORD EO	REWORK	SCRAP	1	VD1	SUPPORT	RELIAB. GROUP	GROUP LEADER	STRESS GROUP	LIAISON ENGRG	PROJ ENGRG	~~GOVT~~

PRIORITY	DRAWING TITLE	DRAWING NO.	EO NO.
C	SUPT INSTL D/S F.I.T.H. INSTRUM.	LDW280-51836	A2

ISSUED BY Don Ragas X6454 SECTION VD1 GROUP NO. 335 PL 5

01 NAS 9-1100

B

ENG 32.2 REV 3-65

GRUMMAN AIRCRAFT ENGINEERING CORP.
CODE IDENT NO. 26512
ENGINEERING ORDER

DWG. NO. LDW280-51836
EO NO. A3
CONTROL INFO NO. LM5-11692

RELEASED BY LIAISON

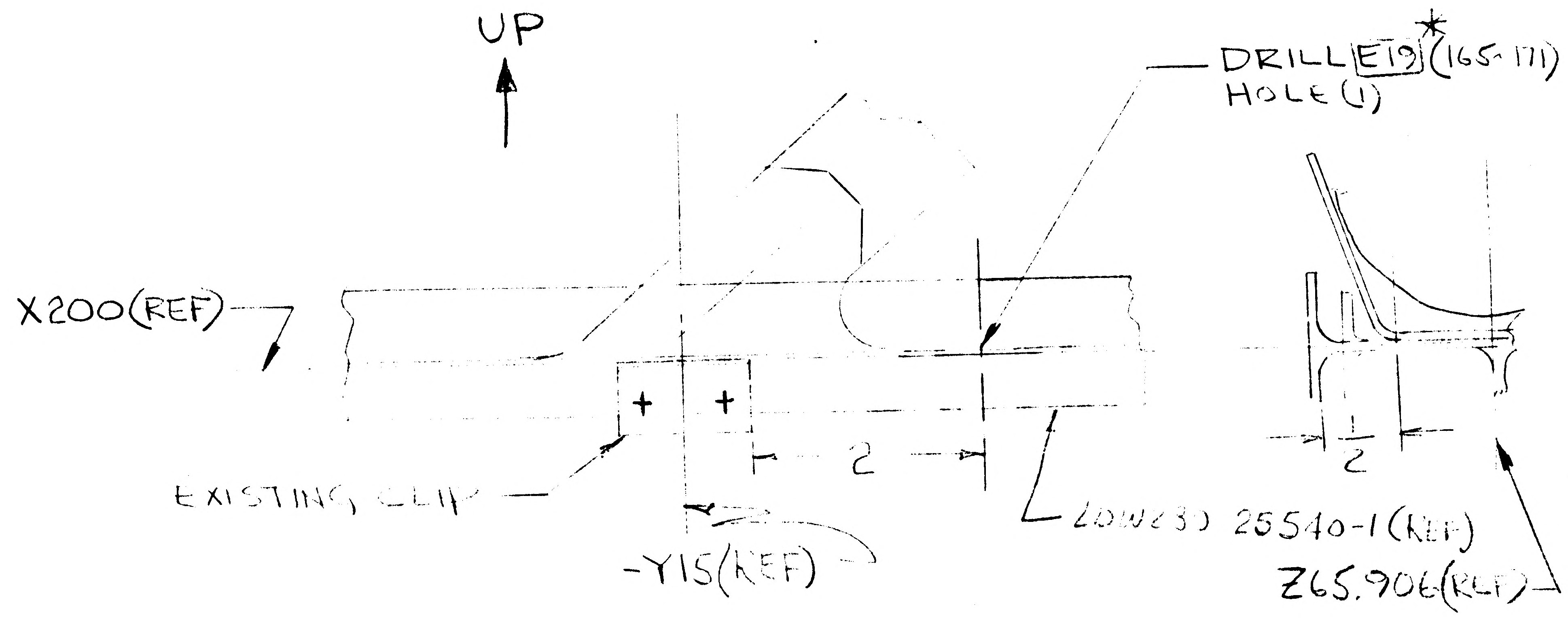

VIEW LKG AFT
LDW280-51836-1 INSTL

01
NAS 9-1100

*ADD KEY TO DWG

5

DETAIL SPEC REQ	☐	CL II ENGRG CHG	☐	CL I ENGRG CHG	☐

REASON FOR EO: PROVIDE GROUND POINT FOR FIRE IN THE HOLE CABLE

DESCRIPTION OF EO: ON-1 ADDED E19*(165-171) HOLE TO LDW280-51836-1 INSTL

GAEC EO RELEASE: LE

MODEL	PROCURING ACTIVITY NO.	GAEC UNIT NO.	SUB CONTR UNIT NO.
LM		LM 1 (U)	

DRAWING CHANGE REQD: REVISE DWG ✓ RECORD EO
DISPOSITION OF PARTS: REWORK ✓ SCRAP

APPROVED BY	WT			jw	ag	CK	RMC(E)	Greef	
DATE	1/23/67			1/22/67	1-23-67	1-23-67	1-27-67	1/23/67	
5	JDI	SUPPORT	RELIAB. GROUP	GROUP LEADER	STRESS GROUP	LIAISON ENGRG	PRO. ENGRG	~~GOVT~~	

PRIORITY: C
DRAWING TITLE: SUPPORT INSTL DESCENT STAGE WITH INSTRUM. STATION
DRAWING NO.: LDW280-51836
EO NO.: A3

ISSUED BY Tom Bianchi (115?) SECTION EQUIP LINES GROUP NO. 227 PL 3

01 NAS 9-1100

GRUMMAN AIRCRAFT ENGINEERING CORP.
CODE IDENT NO. 26512
ENGINEERING ORDER

DWG NO. LDW280-51836
CONTROL INFO NO. LDW280A-7964
EO NO. B1

FOR -5 INSTL. (SHT. 5.00);
IN MAIN VIEW; CORRECT PICTURE OF DESCENT STAGE LANYARD & WIRE BUNDLE LOOPS TO APPEAR AS SHOWN.

ADD SECT. H-H TO CLARIFY INSTL.

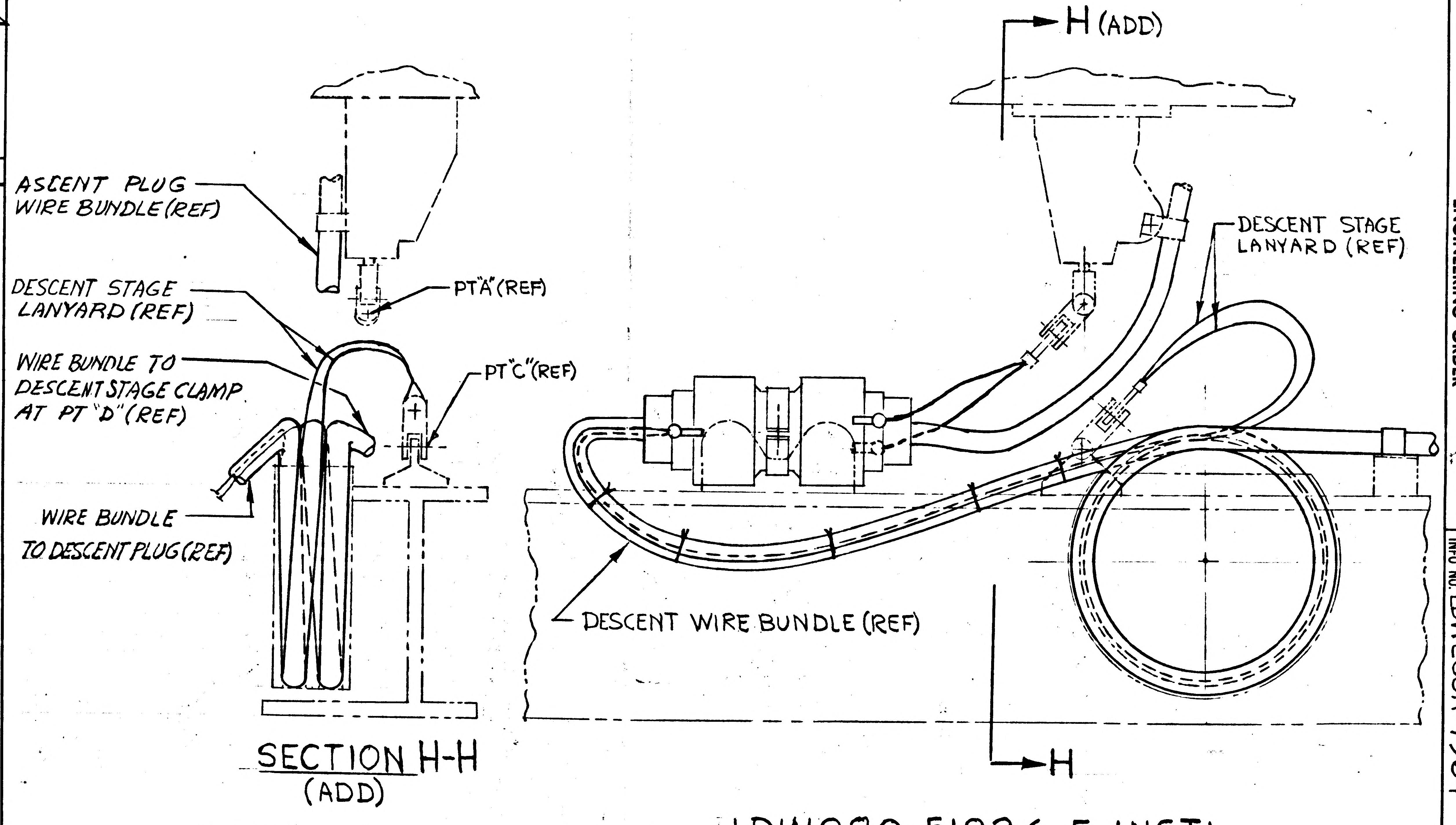

H (ADD)
DESCENT STAGE LANYARD (REF)
DESCENT WIRE BUNDLE (REF)
H
ASCENT PLUG WIRE BUNDLE (REF)
PT "A" (REF)
DESCENT STAGE LANYARD (REF)
WIRE BUNDLE TO DESCENT STAGE CLAMP AT PT "D" (REF)
PT "C" (REF)
WIRE BUNDLE TO DESCENT PLUG (REF)

SECTION H-H
(ADD)

LDW280-51836-5 INSTL

DETAIL SPEC REQ | CL III ENGRG CHG | CL II ENGRG CHG ✓ | LCD 1078

REASON FOR EO: TO CORRECT DWG. ERROR & TO CLARIFY INSTL.

DESCRIPTION OF EO: ON-5 INSTL CORRECTED PICTURE OF DESCENT LANYARD & WIRE BUNDLE LOOPS AND ADDED SECT H-H

MODEL	PROCURING ACTIVITY NO.	GAEC UNIT NO.	SUB CONTR UNIT NO.
LM	LM-1(31)K		
	LM-2(32)K		
	LM-3(32)K		

DRAWING CHANGE REQD: REVISE DWG ✓ | RECORD EO
DISPOSITION OF PARTS: REWORK ✓ | SCRAP
APPROVED BY / DATE: MECH & EXPLO 7-6-67 | SUPPORT 7/10/67 | RELIAB GROUP | GROUP LEADER 7/10/67 | STRESS GROUP 7/10/67 | PROJ ENGRG 7/10/67 | GAEC EO RELEASE 7-11-67

PRIORITY: C
DRAWING TITLE: SUPPORT INSTL-DESCENT STAGE-FITH INSTRUMENTATION
DRAWING NO. LDW280-51836
EO NO. B1

ISSUED BY L. ANGELOFF 1381 SECTION MECH/GER DEV/VDI GROUP NO. 280 PL 25

ENG 32.2 REV 3-65

ENO 32.2 REV 3-65

GRUMMAN AIRCRAFT ENGINEERING CORP.
CODE IDENT NO. 26512
ENGINEERING ORDER

DWG. NO. LDW280-51836		EO NO. B1
CONTROL INFO NO. LDW280A-7964		

FOR-5 INSTL. (SHT. 5.00);
IN MAIN VIEW; CORRECT PICTURE OF DESCENT STAGE
LANYARD & WIRE BUNDLE LOOPS TO APPEAR
AS SHOWN.
ADD SECT. H-H TO CLARIFY INSTL.

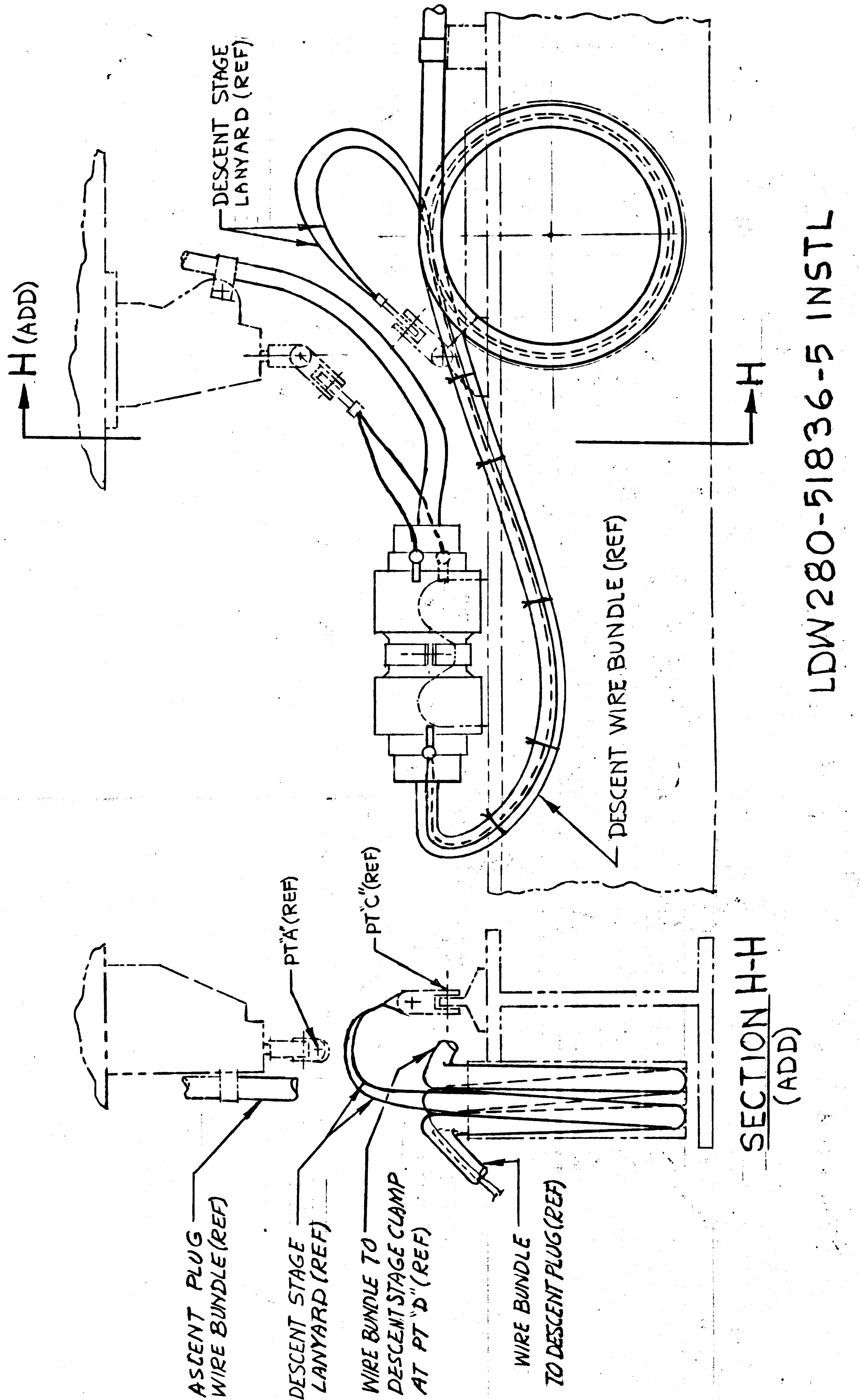
DESCENT STAGE LANYARD (REF)
H (ADD)
H
DESCENT WIRE BUNDLE (REF)
LDW280-51836-5 INSTL
PT "A" (REF)
PT "C" (REF)
ASCENT PLUG WIRE BUNDLE (REF)
DESCENT STAGE LANYARD (REF)
WIRE BUNDLE TO DESCENT STAGE CLAMP AT PT "D" (REF)
WIRE BUNDLE TO DESCENT PLUG (REF)
SECTION H-H
(ADD)

DETAIL SPEC REQ		CL II ENGRG CHG	✓	CL I ENGRG CHG		LCD 1078

REASON FOR EO	DESCRIPTION OF EO	GAEC EO RELEASE
TO CORRECT DWG. ERROR & TO CLARIFY INSTL.	ON-5 INSTL CORRECTED PICTURE OF DESCENT LANYARD & WIRE BUNDLE LOOPS AND ADDED SECT H-H	JL 7-11-7

MODEL	PROCURING ACTIVITY NO.	GAEC UNIT NO.	SUB CONTR UNIT NO.
LM	LM-1(31)K		
	LM-2(32)K		
	LM-3(32)K		

DRAWING CHANGE REQD		DISPOSITION OF PARTS	
REVISE DWG	RECORD EO	REWORK	SCRAP
✓		✓	

APPROVED BY	[illegible]	[illegible]		JW	WJH	HRG	[illegible]	Bott
DATE	7-10-67	7/11/67		7/10/67	7/10/67	PROJ KSC	7/10/67	7-11-67
	MECH & EXPLO	~~SUPPORT~~ VDI	RELIAB. GROUP	GROUP LEADER	STRESS GROUP	~~DESIGN~~ ENGRG	PROJ ENGRG	~~DEPT.~~

PRIORITY	DRAWING TITLE	DRAWING NO.	EO NO.
C	SUPPORT INSTL - DESCENT STAGE - FITH INSTRUMENTATION	LDW280-51836	B1

ISSUED BY L. ANGELOFF 1381 SECTION MECH & EX DEV. / VDI GROUP NO. 280 PL 25

ENG 32.2 REV 3-65

GRUMMAN AIRCRAFT ENGINEERING CORP.
CODE IDENT NO. 26512
ENGINEERING ORDER

DWG. NO. LDW280-51836	EO NO. B2
CONTROL INFO NO. LM83-4233	

CREATE -7 INSTL SAME AS -5 INSTL EXCEPT AS SHOWN
EFFECTIVITY OF -7 INSTL LM-3 (33)K 1 REQD/MOD, N/A LDW280-53000

FOR -5 INSTL DELETE N/A LDW280-53000, LM-3(33)K 1 REQD/MOD

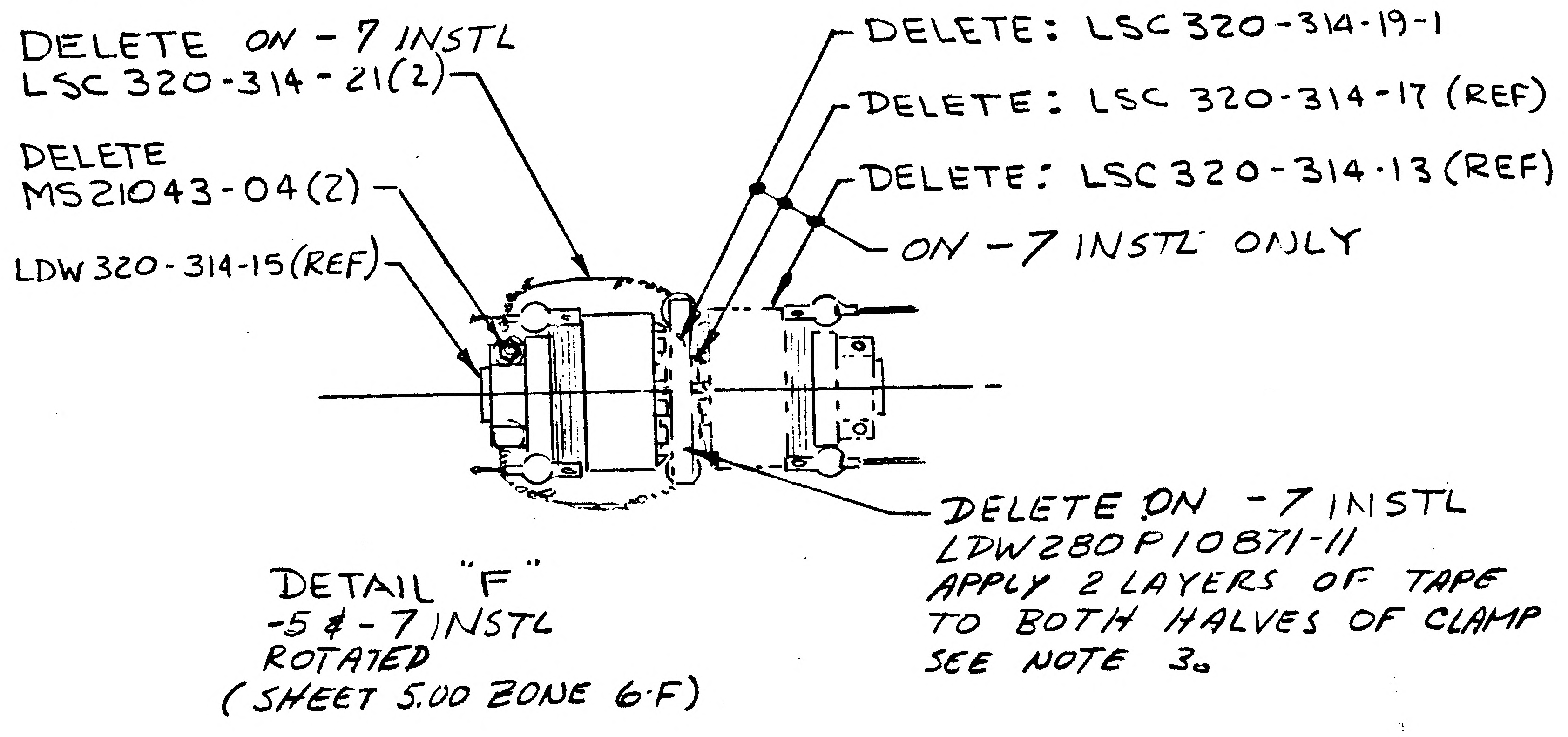
DELETE ON -7 INSTL
LSC 320-314-21(2)
DELETE
MS21043-04(2)
LDW 320-314-15(REF)
DELETE: LSC 320-314-19-1
DELETE: LSC 320-314-17 (REF)
DELETE: LSC 320-314-13 (REF)
ON -7 INSTL ONLY
DELETE ON -7 INSTL
LDW280P10871-11
APPLY 2 LAYERS OF TAPE
TO BOTH HALVES OF CLAMP
SEE NOTE 3.

DETAIL "F"
-5 & -7 INSTL
ROTATED
(SHEET 5.00 ZONE 6-F)

ON PAGE 3.00 - REVISE NOTE 3
3- MATING PROCEDURE FOR F.I.T.H. CONNECTOR SET -5 INSTL. ONLY "WAS"
MATING PROCEDURE FOR F.I.T.H. CONNECTOR SET.

ADD * INSTALL DESCENT STAGE HALF OF FITH CONNECTOR (P1565B) & CABLE ASSY BY FOLLOWING THE PROCEDURES OF NOTE 3Y, 4 3s, EXCEPT THAT IN NOTE 3s CABLE LENGTH FROM THE CANNISTER (PT. E) SHALL BE LONGER THAN THE DESCENT LANYARD. -7 INSTL ONLY.

-7 INSTL MAY BE MADE BY REWORKING -5 INSTL.

ADD (-7 INSTL)
GT835P-8 A/R
3 STRIPS WITH 1/2" OVERLAP REQD.
TAPE TO OVERLAP LDW280-11700-13 BY 3/4" ON BOTH ENDS

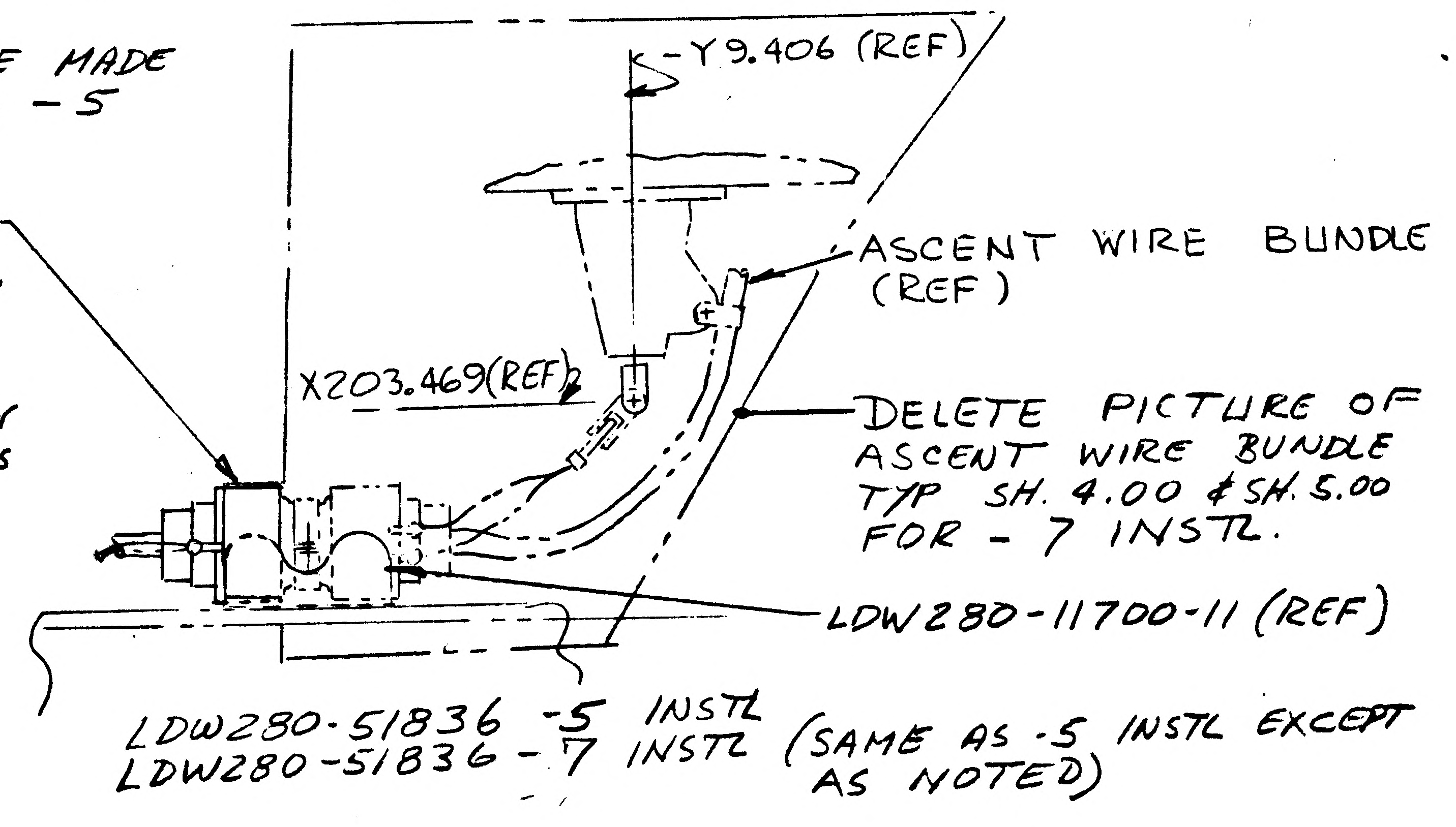
Y9.406 (REF)
ASCENT WIRE BUNDLE
(REF)
X203.469(REF)
DELETE PICTURE OF
ASCENT WIRE BUNDLE
TYP SH. 4.00 & SH. 5.00
FOR -7 INSTL.
LDW280-11700-11 (REF)

LDW280-51836 -5 INSTL
LDW280-51836 -7 INSTL (SAME AS -5 INSTL EXCEPT AS NOTED)

* USE NEXT AVAILABLE NOTE NUMBER

DETAIL SPEC REQ		CL II ENGRG CHG		CL I ENGRG CHG	✓	LCD 11231 ECP F096							(83)
REASON FOR EO					DESCRIPTION OF EO	IN F/D, M/B & B/H ADDED -7 INSTL. SAME AS -5 INSTL EXCEPT AS SHOWN. FOR -5 INST DELETED LM-3 EFFECTIVITY. REVISED NOTE 3. ADDED "-5 INSTL ONLY." ADDED NOTE * & GT835P-8 A/R							GAEC EO RELEASE
REMOVAL OF FITH CONN. SET MATING REQUIREMENTS DUE TO MISMATCH OF CABLE/LANYARD LENGTHS													11/21
MODEL	EFFECTIVITY			DRAWING CHANGE REQD		DISPOSITION OF PARTS		APPROVED BY					
	EI ~~PROCURING ACTIVITY NO.~~	GAEC UNIT NO.	SUB CONTR UNIT NO.	✓ REVISE DWG	RECORD EO	REWORK	✓ SCRAP	DATE	11/19/68			11/5/68	11-5	11-6-68
									VDI	SUPPORT	RELIAB. GROUP	GROUP LEADER	STRESS GROUP	LIAISON ENGRG	PROJ ENGRG	~~SCIT~~
LM	LFM # K133	LM-3(33)		PRIORITY	DRAWING TITLE					DRAWING NO.			EO NO.
				C	SUPPORT INSTL. D/S - FITH INSTRUMENTATION					LDW280-51836			B2

ISSUED BY C.H. COHEN X8590 SECTION SYS/ENG - VDI GROUP NO. 816 PL 83

01 NAS 9-1100

LDW280-51842 A

MODEL OR END ITEM	NEXT ASSY	MODULE OR SER NO.	REQD PER MODULE OR END ITEM
PART NO.		GAEC SCH NO.	

MODEL OR END ITEM	NEXT ASSY	MODULE OR SER NO.	REQD PER MODULE OR END ITEM
PART NO.		GAEC SCH NO.	

MODEL OR END ITEM	NEXT ASSY	MODULE OR SER NO.	REQD PER MODULE OR END ITEM
	LDW280-52012	LM-2(32)	1 EA
	LDW280-51012	LM-1(31)	1 EA
PART NO. LDW280-51842-1 & -2		GAEC SCH NO. 32	

5

SH REV STATUS: FOR DESCRIPTION OF REV SEE SUBQ SH

SHEET	1.00		1.10		2.00		3.00		
REV	A		A		A		A		
SHEET									
REV									
SHEET									
REV									

LAST SECT LTR USED		GRUMMAN REF INFO	
		PRIM NO.	LE(001)
LAST DASH NO. USED	-2	215	MP-1 11-28-6-A

UNLESS OTHERWISE SPECIFIED DIMENSIONS ARE IN INCHES.
TOLERANCE UNLESS SPECIFIED
FRACTIONS - DECIMALS - ANGLES
± 1/32 ±.010 ± 1/2°
ORIG DWG AUTH
DETAIL SPEC REQUIREMENT
CLASS II ENGRG CHANGE
CLASS I ENGRG CHANGE

CONTRACT NO. NAS 9-1100
LINE ITEM # 1
DOCUMENTATION TYPE II

DRAWN BY	L. DIXON 11-4-66	RELIABILITY	
LAYOUT BY	L. BERLINQUETTE		
CHECKED BY	J.S. 11-5-66		
GROUP LDR	11/16/66		
VEH DES INT	W R BISCHOFF		
STRUCTURES		PROJ ENGR	R.M. Carbee 11-22-66
STRUCTURES		REL GROUP	Botti 11-26-66
WEIGHTS			

GRUMMAN AIRCRAFT ENGRG CORP
BETHPAGE, L. I., NEW YORK

BRACKET INSTL
ASCENT STAGE - MID SECT - Z27 BULKHD
EQUIP LINES

SIZE	CODE IDENT NO.		
B	26512	LDW280-51842	A
SCALE	NONE	SHEET 1.00 OF 4	

ENG 77.1 12-65

01 NAS 9-1100

REVISIONS FOR CONTINUATION OF REVISIONS SEE SHEET ______

CHANGE LTR	ITEM NO.	SHEET NO.	ZONE	GRUMMAN INFO ONLY	DET SPEC	CLASS I	CLASS II	ENGRG ORDER	DESCRIPTION	EFFECTIVITY	DISPOSITION OF EXISTING PARTS		CHANGED BY AND DATE	ENGRG APPD	[illegible] APPD
											REWORK	SCRAP			
A	1							EOA1 Ⓡ	EOA1 INITIAL DWG RELEASE, INSTL MADE PER EO	LM-1¢-2	NOT	REQD	L.Dixon 11-4-66		

CHG APPROVED

LTR	GROUP LDR	VEH DES INT	STRUCTURES	STRUCTURES	WEIGHTS	RELIABILITY					
A	—										

GRUMMAN AIRCRAFT ENGRG CORP., BETHPAGE, L. I., NEW YORK

SIZE	CODE IDENT NO.		
B	26512	LDW280-51842	A
SCALE NONE		SHEET 1.10	

ENG 77.16 3-66

01

NAS 9-1100

								MS20426AD4	E	RIVET	STD PART						
								MS20470AD4	E	RIVET	STD PART						
					1	1		LDW280-11611-13	E	CLIP	SEE DWG						6C
					1	1		LDW280-11611-11	E	BRACKET	SEE DWG						6C
								LDW280-51842-2	E	BRACKET INSTL					NONE	NONE	
								LDW280-51842-1	E	BRACKET INSTL					NONE	NONE	
					-2	-1	CODE IDENT	PART NO.	I&T	NOMENCLATURE OR DESCRIPTION	MATERIAL	GOVT SPEC	COML SPEC	STOCK SIZE	PROCESS SYM	FINISH NO.	ZONE
QTY PER ASSEMBLY																	

SYM OR NO.	PROCESS OR FINISH	GRUMMAN SPEC OR MILITARY SPEC	SYM OR NO.	PROCESS OR FINISH	GRUMMAN SPEC OR MILITARY SPEC	SYM OR NO.	PROCESS OR FINISH	GRUMMAN SPEC OR MILITARY SPEC

I & T: IDENTIFICATION AND TRACEABILITY IN ACCORDANCE WITH : NONE

GRUMMAN AIRCRAFT ENGRG CORP, BETHPAGE, L. I., NEW YORK

SIZE	CODE IDENT NO.		
B	26512	LDW280-51842	A
SCALE NONE		SHEET 2.00	

ENG 77.2 7-65

01 NAS 9-1100

NOTES.
1. MS20470AD4 RIVETS MAY BE SQUEEZED

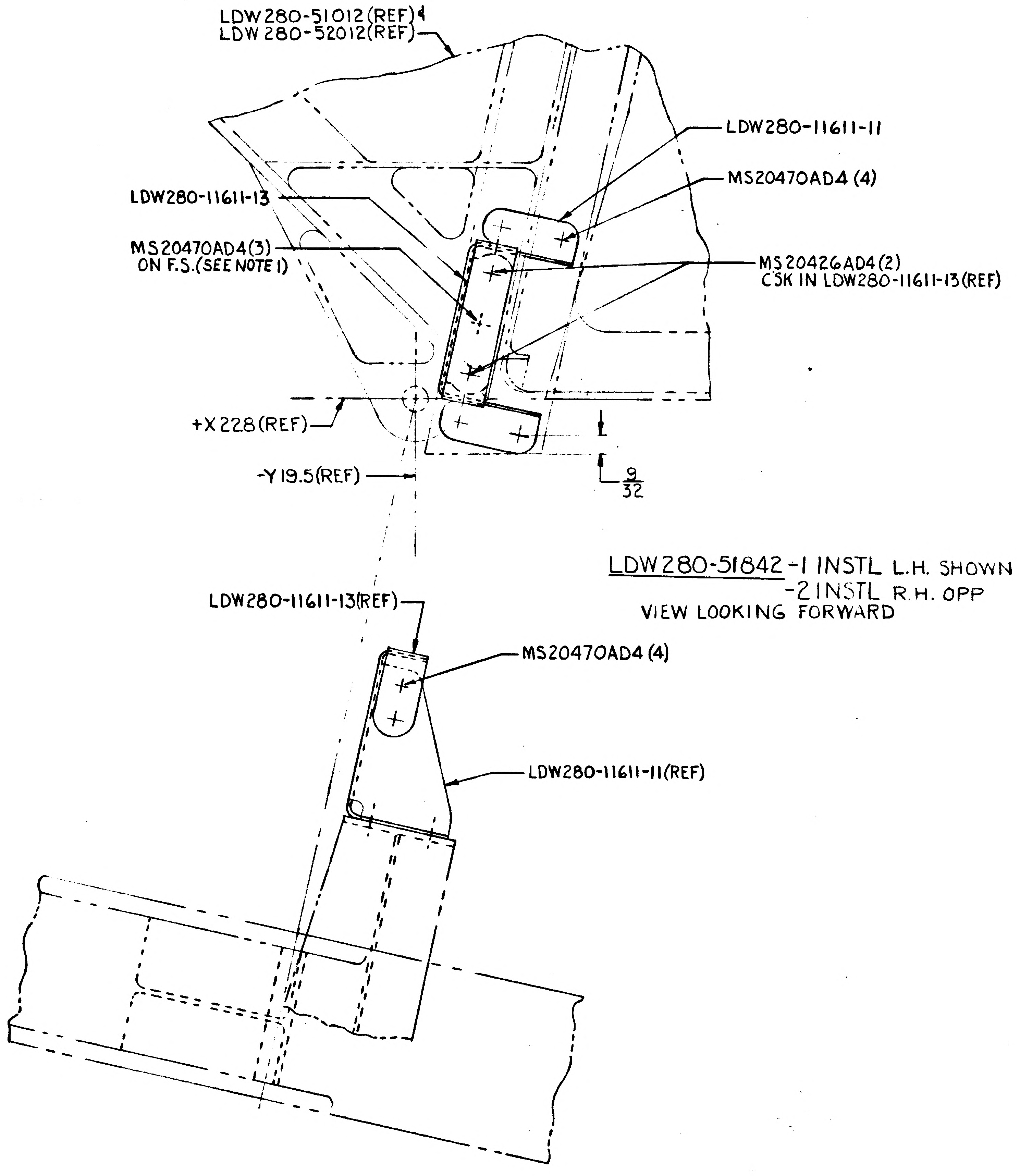
LDW280-51012(REF) &
LDW280-52012(REF)
LDW280-11611-11
MS20470AD4 (4)
LDW280-11611-13
MS20470AD4(3)
ON F.S.(SEE NOTE 1)
MS20426AD4(2)
CSK IN LDW280-11611-13(REF)
+X228(REF)
-Y19.5(REF)
9/32
LDW280-11611-13(REF)
MS20470AD4 (4)
LDW280-11611-11(REF)

LDW280-51842-1 INSTL L.H. SHOWN
-2 INSTL R.H. OPP
VIEW LOOKING FORWARD

MANUFACTURING OPERATIONS UNLESS OTHERWISE SPECIFIED NOTES CHECKED ✓ APPLY TO THIS DWG.	
PART NUMBER AND ALL OTHER MARKINGS IN REGION MARKED ☒ USE BOTH SIDES IF NECESSARY.	
FILLET AND INSIDE CORNER RADII TOLERANCES .016R TO .062R ± .010 .063R TO .250R ± .015 OVER .250R ± .030	
DEPTH SHOWN FOR TAPPED HOLES IS FULL THDS. 2-3 IMP. THDS. BEYOND PERMISSIBLE	
EXTERNAL THREAD LENGTH SHOWN INCLUDES 2 IMPERFECT THREADS MAX.	
DO NOT CADMIUM PLATE & PAINT HOLES OR SURFACES MARKED WITH DOUBLE ASTERISK.	
MISMATCH STEP OF ± .005 PERMISSIBLE DUE TO CHANGE OF CUTTERS AT INSIDE INTERSECTING SURFACES.	
DIAMETERS MARKED MUST BE CONCENTRIC WITHIN FULL INDICATOR READING	
HOLES MUST BE KEPT FREE OF CHROME PLATING SOLUTION.	
ALL DIMENSIONS SHOWN TO BE MET AFTER CADMIUM PLATING. THICKNESS OF PLATE .0003 MIN TO .0005 MAX. MIN THICKNESS TO BE .0002 ON THREADED AREAS. NO ALLOWANCES FOR PLATING IN HOLES	
125 √ SURFACE ROUGHNESS INCLUDING REAMED HOLES PER MIL-STD-10	
200 √ FOR ALL DRILLED HOLES	
REMOVE ALL BURRS. BREAK ALL EDGES .015-.031	
INSPECTION INFORMATION MINIMUM PERMISSIBLE AVERAGE EDGE DISTANCE MARKED IS	
SYMBOL √ DENOTES SURFACE TO BE MACHINED	
UNLESS OTHERWISE SPECIFIED TOLERANCE ON FLANGES IS ± 1/32	
LENGTHS OF AN, NAS & MS AL ALY RIVETS SHORTER THAN 1 INCH ARE NOT SPECIFIED	✓
TOLERANCE ON LOFTED DELINEATIONS IS ± 1/32	

GRUMMAN AIRCRAFT ENGRG CORP. BETHPAGE, L. I., NEW YORK

MODEL OR END ITEM	SIZE	CODE IDENT NO.		
LM	D	26512	LDW280-51842	A
SCALE FULL			SHEET 3.00	

NAS 9-1100

ENG 32.1 REV 3-65

GRUMMAN AIRCRAFT ENGINEERING CORP.
CODE IDENT NO. 26512
ENGINEERING ORDER

DWG. NO. LDW280-51842
EO NO. B1
CONTROL INFO NO. LM-5-11009

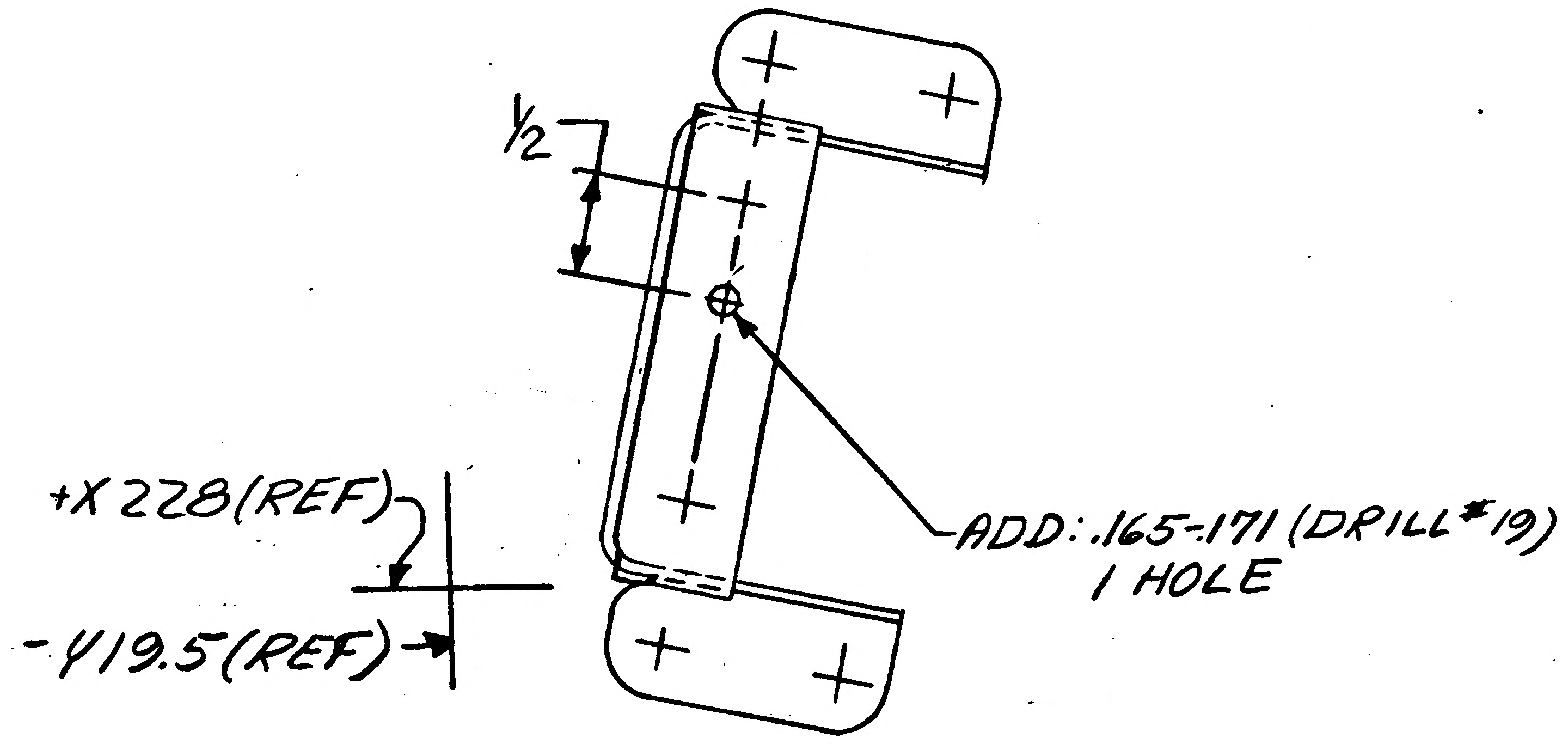

LDW280-51842-1 (SHOWN)
-2 (OPP)

DETAIL SPEC REQ		CL II ENGRG CHG		CL I ENGRG CHG	

REASON FOR EO: PROVIDE CLAMPING POINT FOR WIRING

DESCRIPTION OF EO: ON -1 & -2 ADDED #19 HOLE

GAEC EO RELEASE: C

MODEL	PROCURING ACTIVITY NO.	GAEC UNIT NO.	SUB CONTR UNIT NO.
LM		LM-1 (31)	
		LM-2 (32)	

DRAWING CHANGE REQD		DISPOSITION OF PARTS		APPROVED BY	WT							
✓		✓		DATE	11/2/66				11-2-66	11-3-66	11-7-66	11/8/66
REVISE DWG	RECORD EO	REWORK	SCRAP	1	VDI	SUPPORT	RELIAB. GROUP	GROUP LEADER	STRESS GROUP	LIAISON ENGRG	PROJ ENGRG	

PRIORITY: C
DRAWING TITLE: BRACKET INSTL - A/S -227 BULKHEAD EQUIP LINES
DRAWING NO.: LDW280-51842
EO NO.: B1

ISSUED BY R.L. Norton (6655 & 7033) SECTION EQUIP LINES GROUP NO. 332 PL 5

01 NAS 9-1100

ENG 32.1 REV 3-65

*

GRUMMAN AIRCRAFT ENGINEERING CORP.
CODE IDENT NO. 26512

ENGINEERING ORDER

DWG. NO. LDW280-51842
EO NO. B2
CONTROL INFO NO. LM5-9499

ON -2

LDW280-11611-11 S/B LDW280-11611-11-1

DETAIL SPEC REQ		CL II ENGRG CHG		CL I ENGRG CHG	✓

REASON FOR EO
TO ELIMINATE EQ. LINES INTERFERENCE

DESCRIPTION OF EO
ON-2
LDW280-11611-15 WAS LDW280-11611-11

GAEC EO RELEASE: FR

MODEL	EFFECTIVITY: PROCURING ACTIVITY NO.	EFFECTIVITY: GAEC UNIT NO.	EFFECTIVITY: SUB CONTR UNIT NO.
LM		LM-1(31)	
LM		LM-2(32)	

DRAWING CHANGE REQD: REVISE DWG	DRAWING CHANGE REQD: RECORD EO	DISPOSITION OF PARTS: REWORK	DISPOSITION OF PARTS: SCRAP
✓		✓	

APPROVED BY	WT			~	WB	CH	RMC	
DATE	11/2/66			~	11/2/66	11-3-66	11-7-66	11/3/66.
6	VDI	SUPPORT	RELIAB. GROUP	GROUP LEADER	STRESS GROUP	LIAISON ENGRG	PROJ ENGRG	

PRIORITY	DRAWING TITLE	DRAWING NO.	EO NO.
C	BRACKET INSTL. ASCENT MID-SECT -227 BKHD EQ. LINES	LDW280-51842	B2

ISSUED BY K. BEACH/W. TRAUT 11/2/66 SECTION VDI 6454 GROUP NO. 335 PL 5

01 NAS 9-1100

ENG 32.1 REV 3-65

GRUMMAN AIRCRAFT ENGINEERING CORP.
CODE IDENT NO. 26512
ENGINEERING ORDER

DWG. NO. LDW 280-51842
EO NO. B3
CONTROL INFO NO. LDW 280A 3684

THIS EO. CANCELLES EO. B2.

3

DETAIL SPEC REQ		CL II ENGRG CHG		CL I ENGRG CHG	

REASON FOR EO: CANCELLATION OF EO. B2

DESCRIPTION OF EO: CANCELLED EO. B2

GAEC EO RELEASE: FR 12/2/66

MODEL	EFFECTIVITY: PROCURING ACTIVITY NO.	GAEC UNIT NO.	SUB CONTR UNIT NO.
LM		LM-1 (31)	
LM		LM-2 (32)	

DRAWING CHANGE REQD		DISPOSITION OF PARTS	
✓		NOT REQ'D	
REVISE DWG	RECORD EO	REWORK	SCRAP

APPROVED BY	DP			—				
DATE	11/23/66			—	12/5		11/6	12/1/66
6	VDI	SUPPORT	RELIAB. GROUP	GROUP LEADER	STRESS GROUP	LIAISON ENGRG	PROJ ENGRG	~~GOVT~~

PRIORITY: C
DRAWING TITLE: BRKT. INSTL.. ASCENT- MID-SECT. -Z27 BKHD. EQUIP. LINES.
DRAWING NO.: LDW 280-51842
EO NO.: B3

ISSUED BY J Gilman 11-23-66 SECTION VDI GROUP NO. 335 PL 35

LDW280-51846

MODEL OR END ITEM	NEXT ASSY	MODULE OR SER NO.	REQD PER MODULE OR END ITEM
LM	LDW280-52002	LM-2(32)	1
LM	LDW280-51002	LM-1(31)	1
PART NO. LDW280-51846-1		GAEC SCH NO. 31	

6

SH REV STATUS: FOR DESCRIPTION OF REV SEE SUBQ SH

SHEET	1.00		2.00	3.00						
REV										
SHEET										
REV										
SHEET										
REV										

LAST SECT LTR USED F

LAST DASH NO. USED -1

GRUMMAN REL INFO

PRIM NO. 215 (E(001) WP-14 11-8-6

UNLESS OTHERWISE SPECIFIED DIMENSIONS ARE IN INCHES.
TOLERANCE UNLESS SPECIFIED
FRACTIONS - DECIMALS - ANGLES
±1/32 ±.020 ±1/2°

ORIG DWG AUTH
DETAIL SPEC REQUIREMENT
CLASS II ENGRG CHANGE
CLASS I ENGRG CHANGE

CONTRACT NO. NAS9-1100
LINE ITEM 1
DOCUMENTATION TYPE II

DRAWN BY M. PACHOLIK 10/31/66
RELIABILITY
LAYOUT BY J. GRANDY
CHECKED BY EG 11-2-66
GP LEADER 11/4/66
VEH DES INT J. Lusatro 11/3
STRUCTURES FEB BW 11-7
STRUCTURES
WEIGHTS
PROJ ENGR R.M. Carbee 11-7-66
REL GROUP 11/7/66

GRUMMAN AIRCRAFT ENGRG CORP
BETHPAGE, L. I., NEW YORK

SUPPORT INSTALLATION
ASCENT STAGE - MID SECTION
ENGINE BELLOWS - OX LINE

SIZE B
CODE IDENT NO. 26512
LDW280-51846
SCALE NONE
SHEET 1.00 OF 3

ENG 77.1 12-65

CDR 11/11/66

01 NAS 9-1100

QTY PER ASSEMBLY -1	CODE IDENT	PART NO.	I&T	NOMENCLATURE OR DESCRIPTION	MATERIAL	GOVT SPEC	COML SPEC	STOCK SIZE	PROCESS SYM	FINISH NO.	ZONE
		SEE NOTE 2	E	SHIM							
		MS20470AD6		RIVET	STD PART						
		MS20470AD5		RIVET							
		MS20470AD4		RIVET							
1		NAS1526-3		PIN							
		NAS1097AD5		RIVET							
1		NAS1080-D6		COLLAR	STD PART						
4		GN512H-08		NUT, COLLAR	GRUMMAN STD						
4		GN512A-A-3		COLLAR							
1		GB511P-3-10		BOLT							
3		GB511P-3-8									
1		GB511K-08-3									
1		GB511D-08-4									
1		GB511D-08-3		BOLT	GRUMMAN STD						
1		LDW280M11233-11		CLAMP	SEE DWG						7B
1		LDW280M11231-11		CLAMP							7B
1		LDW280-11677-15		ANGLE							7B
1		LDW280-11677-13		ANGLE							2B
1		LDW280-11677-11		ANGLE							2C
1		LDW280-11676-13		BRACKET							6C
1		LDW280-11676-11		ANGLE	SEE DWG						4C
		LDW280-51846-1	E	SUPPORT INSTL					NONE	NONE	

SYM OR NO.	PROCESS OR FINISH	GRUMMAN SPEC OR MILITARY SPEC	SYM OR NO.	PROCESS OR FINISH	GRUMMAN SPEC OR MILITARY SPEC	SYM OR NO.	PROCESS OR FINISH	GRUMMAN SPEC OR MILITARY SPEC
						76	ALODINE	LSP-14-9010

I & T: IDENTIFICATION AND TRACEABILITY IN ACCORDANCE WITH : NONE

GRUMMAN AIRCRAFT ENGRG CORP, BETHPAGE, L. I., NEW YORK

SIZE B
CODE IDENT NO. 26512
LDW280-51846
SCALE NONE
SHEET 2.00

ENG 77.2 7-65

01

NAS 9-1100

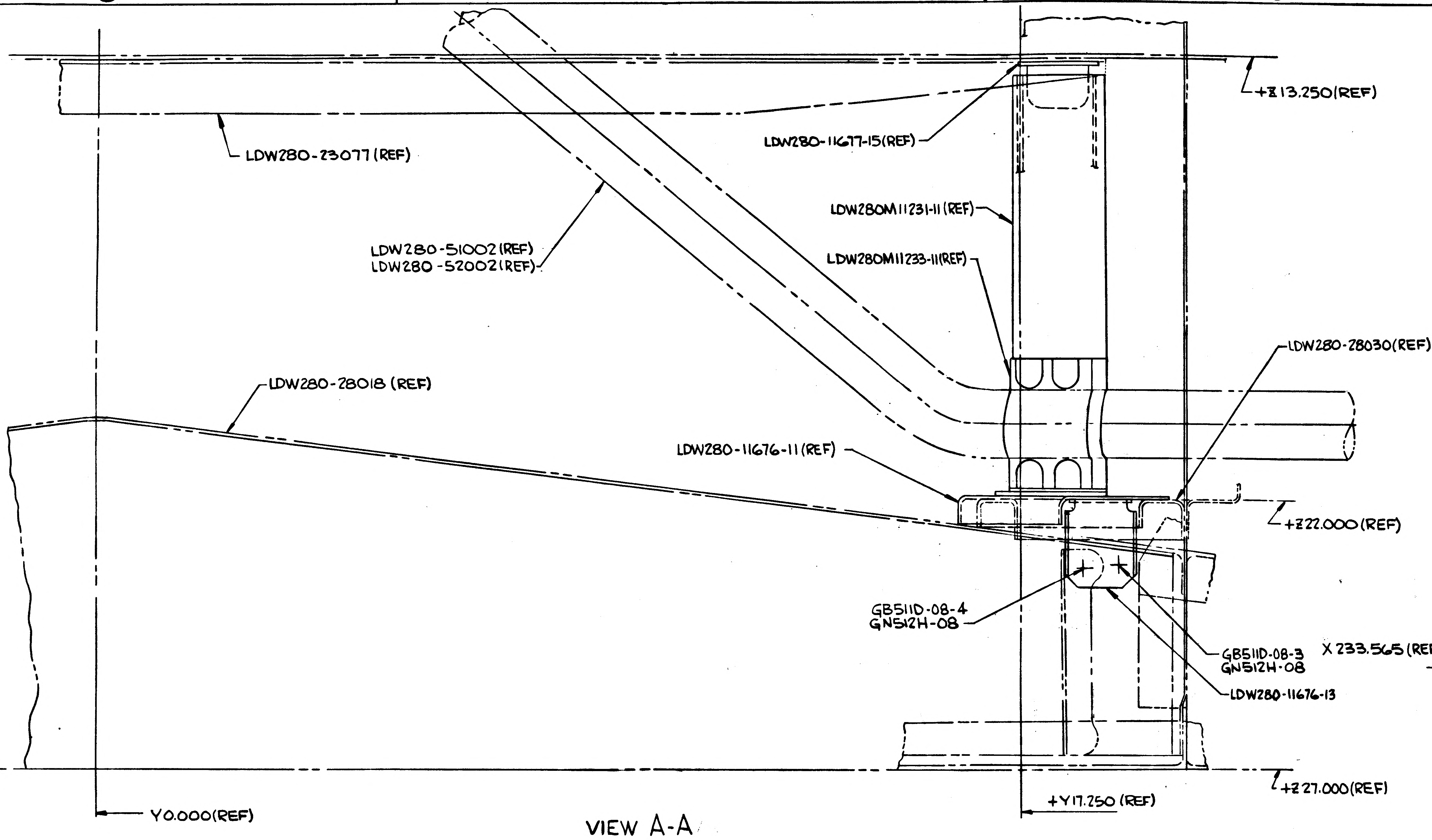
+Z13.250(REF)
LDW280-23077 (REF)
LDW280-11677-15(REF)
LDW280M11231-11(REF)
LDW280M11233-11(REF)
LDW280-51002(REF)
LDW280-52002(REF)
LDW280-28030(REF)
LDW280-28018 (REF)
LDW280-11676-11(REF)
+Z22.000(REF)
GB511D-08-4
GN512H-08
GB511D-08-3
GN512H-08
LDW280-11676-13
+Z27.000(REF)
+Y17.250 (REF)
Y0.000(REF)

VIEW A-A
VIEW LOOKING UP
ZONE 3A

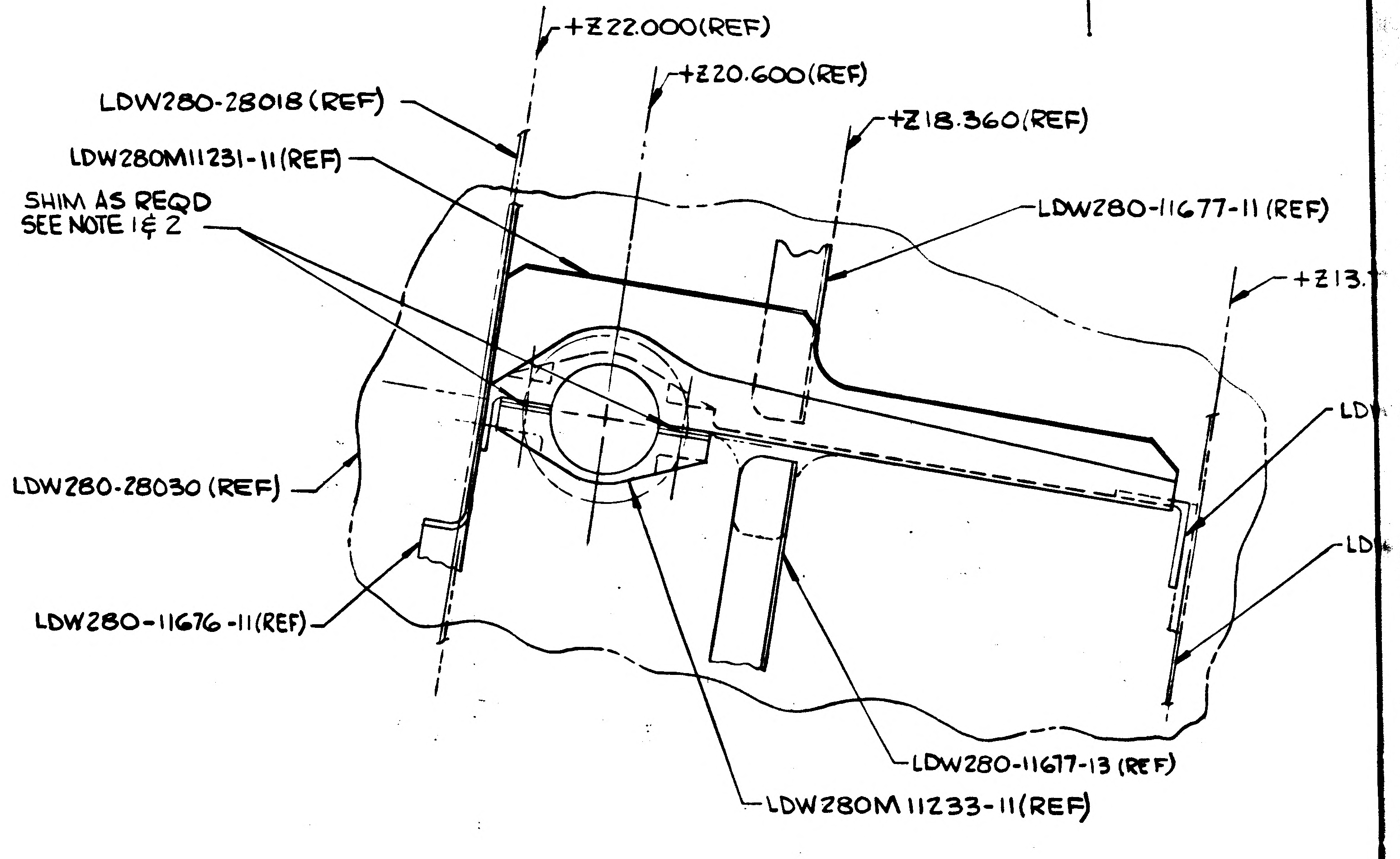
+Z22.000(REF)
+Z20.600(REF)
+Z18.360(REF)
+Z13.
LDW280-28018 (REF)
LDW280M11231-11(REF)
SHIM AS REQD
SEE NOTE 1 & 2
LDW280-11677-11 (REF)
LDW280-28030 (REF)
LDW280-11676-11(REF)
LDW280-11677-13 (REF)
LDW280M11233-11(REF)
LD
LD

SECTION C-C
ZONE 4B

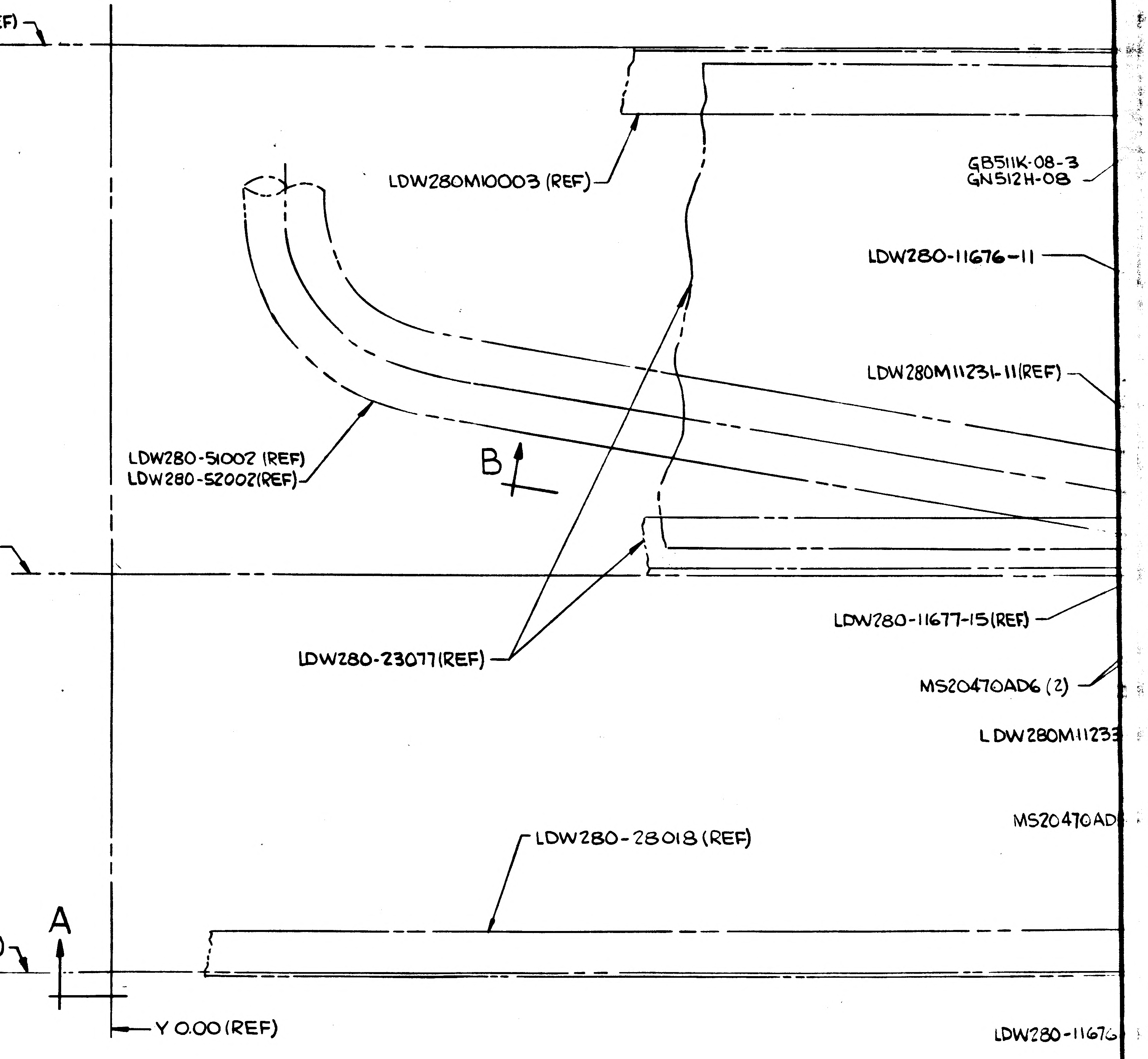
X 233.565 (REF)
LDW280M10003 (REF)
GB511K-08-3
GN512H-08
LDW280-11676-11
LDW280M11231-11(REF)
LDW280-51002 (REF)
LDW280-52002(REF)
B
X 225.565(REF)
LDW280-11677-15(REF)
LDW280-23077(REF)
MS20470AD6 (2)
LDW280M11233
MS20470AD
LDW280-28018 (REF)
A
X 219.530(REF)
Y 0.00(REF)
LDW280-1167

LDW280-51846-1 INSTL
VIEW LOOKING FWD RH SIDE

UP

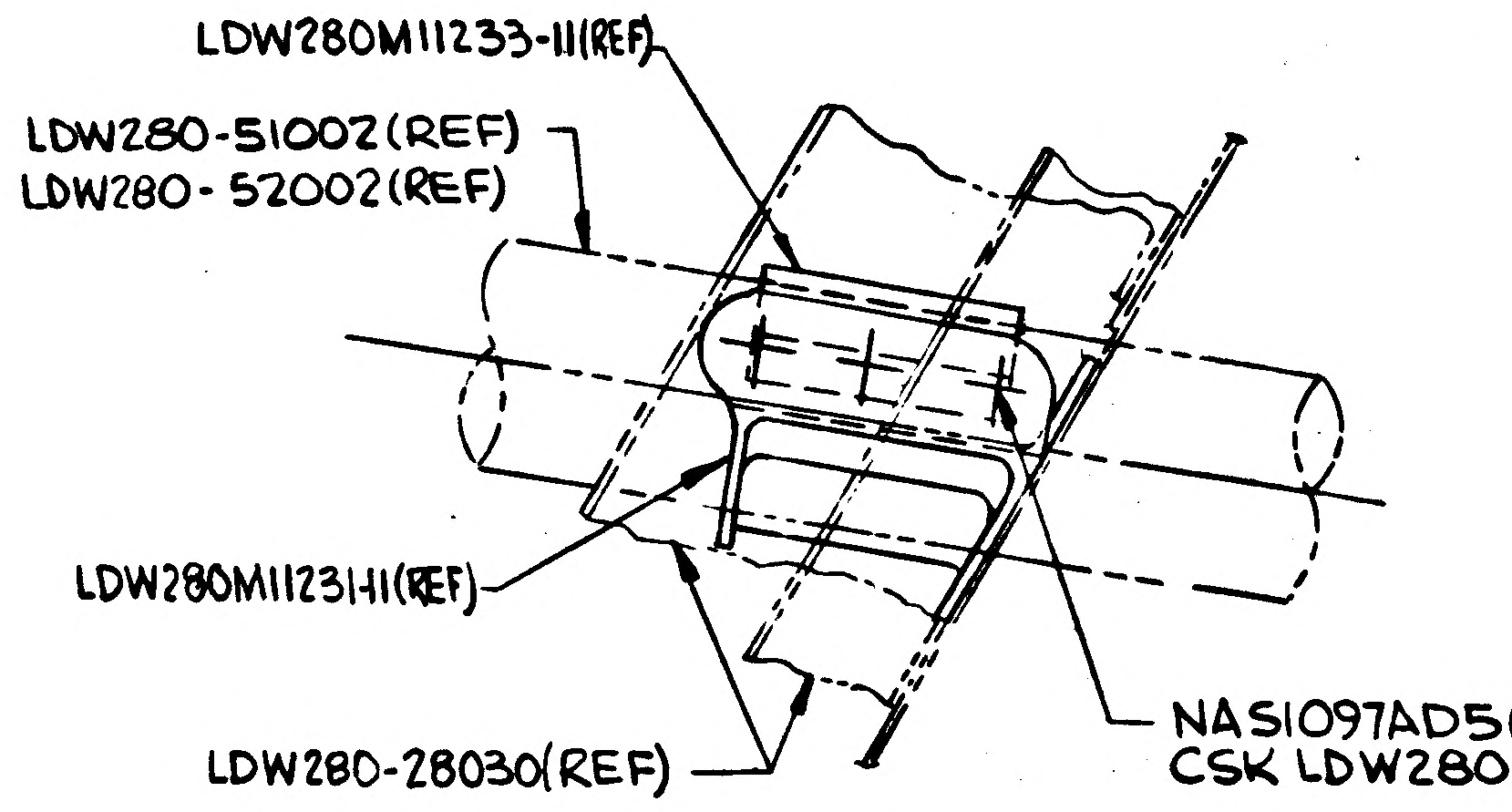
LDW280M11233-11(REF)
LDW280-51002(REF)
LDW280-52002(REF)
LDW280M11231-11(REF)
LDW280-28030(REF)
NAS1097AD5(3)
CSK LDW280-11231-11 FS

SECTION E-E
ZONE 7A

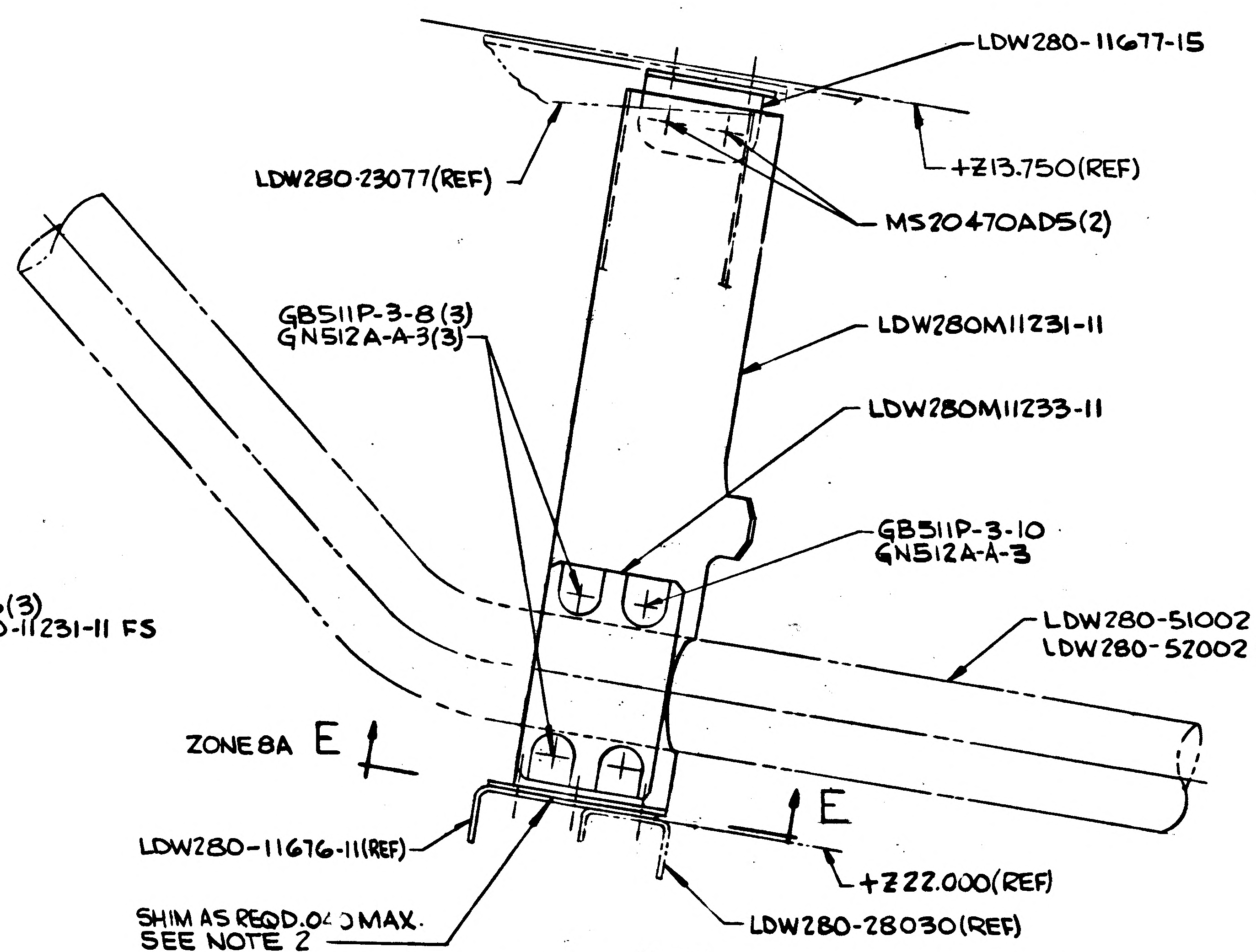
LDW280-11677-15
LDW280-23077(REF)
+Z13.750(REF)
MS20470AD5(2)
GB511P-3-8(3)
GN512A-A-3(3)
LDW280M11231-11
LDW280M11233-11
GB511P-3-10
GN512A-A-3
LDW280-51002 (REF)
LDW280-52002 (REF)
ZONE 8A E
E
LDW280-11676-11(REF)
+Z22.000(REF)
SHIM AS REQD .040 MAX.
SEE NOTE 2
LDW280-28030(REF)

SECTION B-B
ZONE 3B

01/02

NAS 9-1100

LDW280-51846 SHEET 3

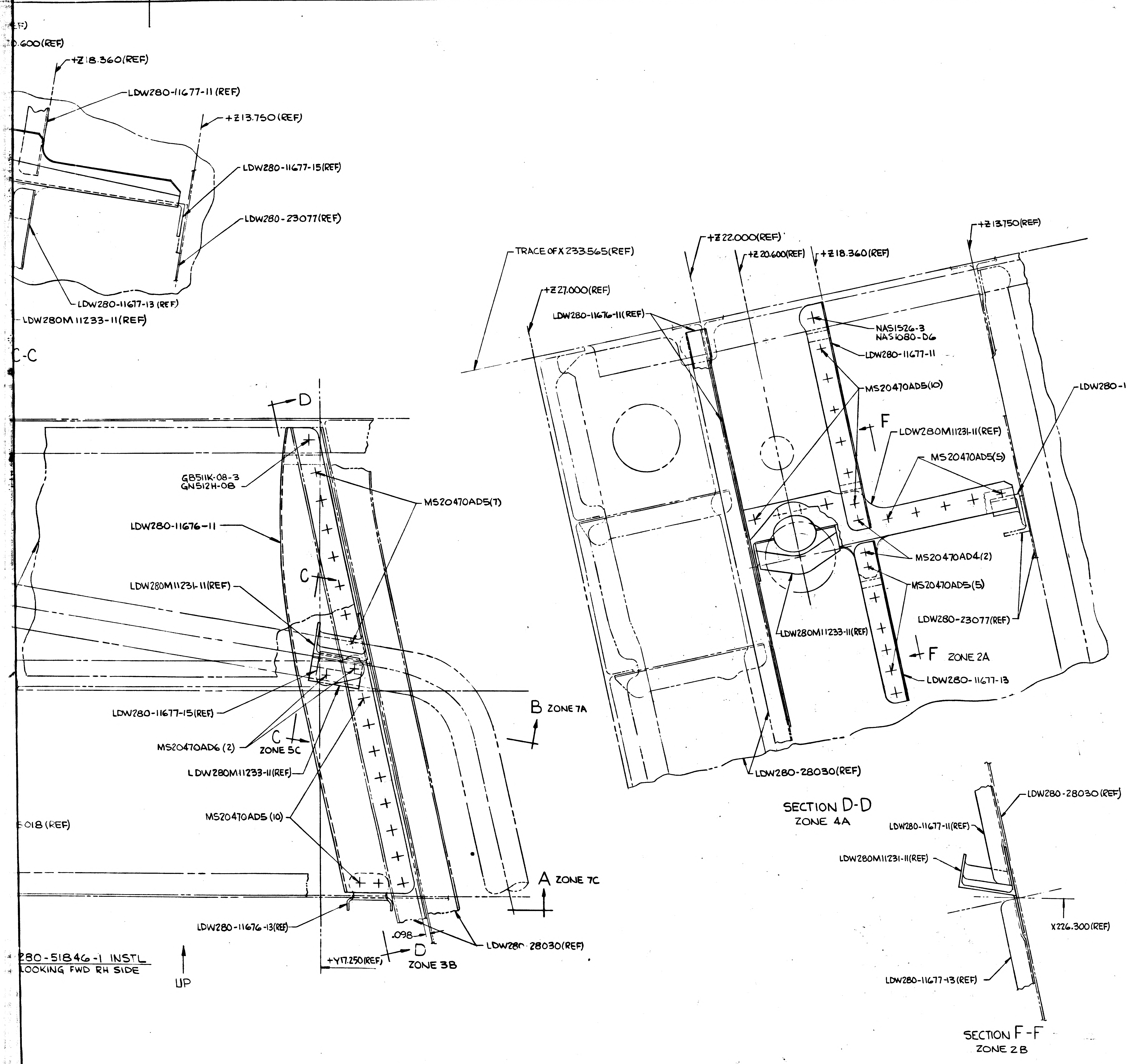
4
3
2
.600(REF)
+Z18.360(REF)
LDW280-11677-11 (REF)
+Z13.750(REF)
LDW280-11677-15(REF)
LDW280-23077(REF)
LDW280-11677-13 (REF)
LDW280M11233-11(REF)
C-C
D
GB511K-08-3
GN512H-08
MS20470AD5(7)
LDW280-11676-11
C
LDW280M11231-11(REF)
LDW280-11677-15(REF)
MS20470AD6 (2)
C
ZONE 5C
LDW280M11233-11(REF)
B ZONE 7A
018 (REF)
MS20470AD5 (10)
A ZONE 7C
LDW280-11676-13(REF)
.098
D
ZONE 3B
LDW280-28030(REF)
+Y17.250(REF)
280-51846-1 INSTL
LOOKING FWD RH SIDE
UP
TRACE OF X 233.565(REF)
+Z22.000(REF)
+Z20.600(REF)
+Z18.360(REF)
+Z13.750(REF)
+Z27.000(REF)
LDW280-11676-11(REF)
NAS1526-3
NAS1080-D6
LDW280-11677-11
MS20470AD5(10)
LDW280-11677-15(REF)
F
LDW280M11231-11(REF)
MS20470AD5(5)
MS20470AD4(2)
MS20470AD5(5)
LDW280-23077(REF)
LDW280M11233-11(REF)
F ZONE 2A
LDW280-11677-13
LDW280-28030(REF)
SECTION D-D
ZONE 4A
LDW280-28030 (REF)
LDW280-11677-11(REF)
LDW280M11231-11(REF)
X226.300(REF)
LDW280-11677-13(REF)
SECTION F-F
ZONE 2B

NOTES:
1. INSTALLATION PROCEDURE
1.1 LOCATE CLAMP LDW280M11231 & LDW280M11233 FROM EXISTING INSTALLED OX LINE. EVENLY TORQUE GB511P BOLTS (4) 8-10 IN. LBS OVER THE NUT LOCKING FEATURE REQUIREMENT. MEASURE THE GAP BETWEEN EACH HALF OF CLAMP ON EACH SIDE & AVERAGE TO DETERMINE SHIM THICKNESS. SHIM THICKNESS ON EACH SIDE TO THIS AVERAGE VALUE.
1.2 REMOVE GB511P BOLTS (4) & ADD REQUIRED SHIMS.
1.3. BOND CLAMPS TO OX LINE WITH EC2216 PER LSP14-22500- CURE RANGE I & REPLACE FASTENERS PER LSP14-15306.
2. SHIM AS REQD USING AL ALLOY, QQ-A-250/4, 2024-T3, FINISH 76.
3. INSTALL MS20470, NAS1097 & GB511D, GB511K, GN512H PER LSP14-15302 & LSP14-15306.
4. NO TOOLING HOLES PERMITTED IN PARTS.

MANUFACTURING OPERATIONS

UNLESS OTHERWISE SPECIFIED
NOTES CHECKED ✓ APPLY TO THIS DWG.

PART NUMBER AND ALL OTHER MARKINGS IN REGION MARKED ☒ USE BOTH SIDES IF NECESSARY.

FILLET AND INSIDE CORNER RADII TOLERANCES
.016R TO .062R ± .010
.063R TO .250R ± .015
OVER .250R ± .030

DEPTH SHOWN FOR TAPPED HOLES IS FULL THDS. 2-3 IMP THDS. BEYOND PERMISSIBLE.

EXTERNAL THREAD LENGTH SHOWN INCLUDES 2 IMPERFECT THREADS MAX.

DO NOT CADMIUM PLATE & PAINT HOLES OR SURFACES MARKED WITH DOUBLE ASTERISK.

MISMATCH STEP OF ± .005 PERMISSIBLE DUE TO CHANGE OF CUTTERS AT INSIDE INTERSECTING SURFACES.

DIAMETERS MARKED MUST BE CONCENTRIC WITHIN FULL INDICATOR READING

HOLES MUST BE KEPT FREE OF CHROME PLATING SOLUTION.

ALL DIMENSIONS SHOWN TO BE MET AFTER CADMIUM PLATING. THICKNESS OF PLATE .0003 MIN. TO .0005 MAX. MIN. THICKNESS TO BE .0002 ON THREADED AREAS. NO ALLOWANCE FOR PLATING IN HOLES

125 SURFACE ROUGHNESS INCLUDING REAMED HOLES PER MIL-STD-10

200 FOR ALL DRILLED HOLES

REMOVE ALL BURRS. BREAK ALL EDGES .015-.031

INSPECTION INFORMATION MINIMUM PERMISSIBLE AVERAGE EDGE DISTANCE MARKED IS

SYMBOL ƒ DENOTES SURFACE TO BE MACHINED

UNLESS OTHERWISE SPECIFIED TOLERANCE ON FLANGES IS ± 1/32

LENGTHS OF AN, NAS & MS AL ALY RIVETS SHORTER THAN 1 INCH ARE NOT SPECIFIED.

TOLERANCE ON LOFTED DELINEATIONS IS

DWG SIZE 34 X 88

PRINTING INFO ONLY
FULL SIZE SHEET AREA (36 X 88) = 22.0 SQ. FT.
1/2 SIZE SHEET AREA (1/4 OF FULL) = 5.5 SQ. FT.
PRINT TRIM LINE

D
C
B
A
1

LDW280-51846

LDW280-51846

02/02

NAS 9-1100

	GRUMMAN AIRCRAFT ENGRG CORP., BETHPAGE, L. I., NEW YORK		
LM	SIZE J	CODE IDENT NO. 26512	LDW280-51846
MODEL OR END ITEM	SCALE FULL		SHEET 3.00

2 FRS

DW280-51846 SHEET 3

ENG 32.2 REV 3-65

GRUMMAN AIRCRAFT ENGINEERING CORP.
CODE IDENT NO. 26512
ENGINEERING ORDER

DWG. NO.	LDW280-51846	EO NO.	A1
CONTROL INFO NO.	LDW280A-4187		

IN ZONE 4C ON-1 REVISE PICTURE AND ADD CALLOUT AS SHOWN:

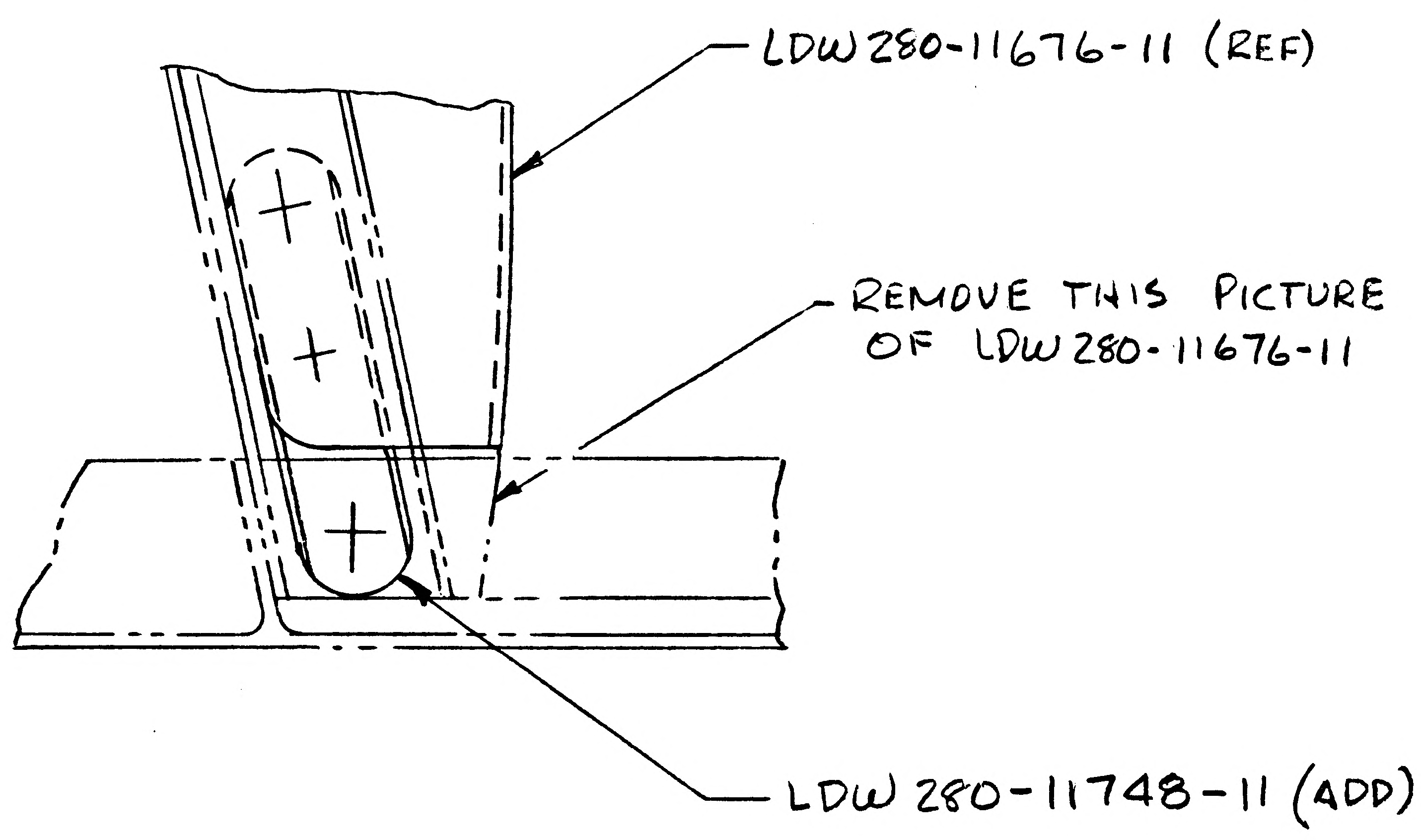

IN ZONE 3C REVISE SECT D-D AS SHOWN

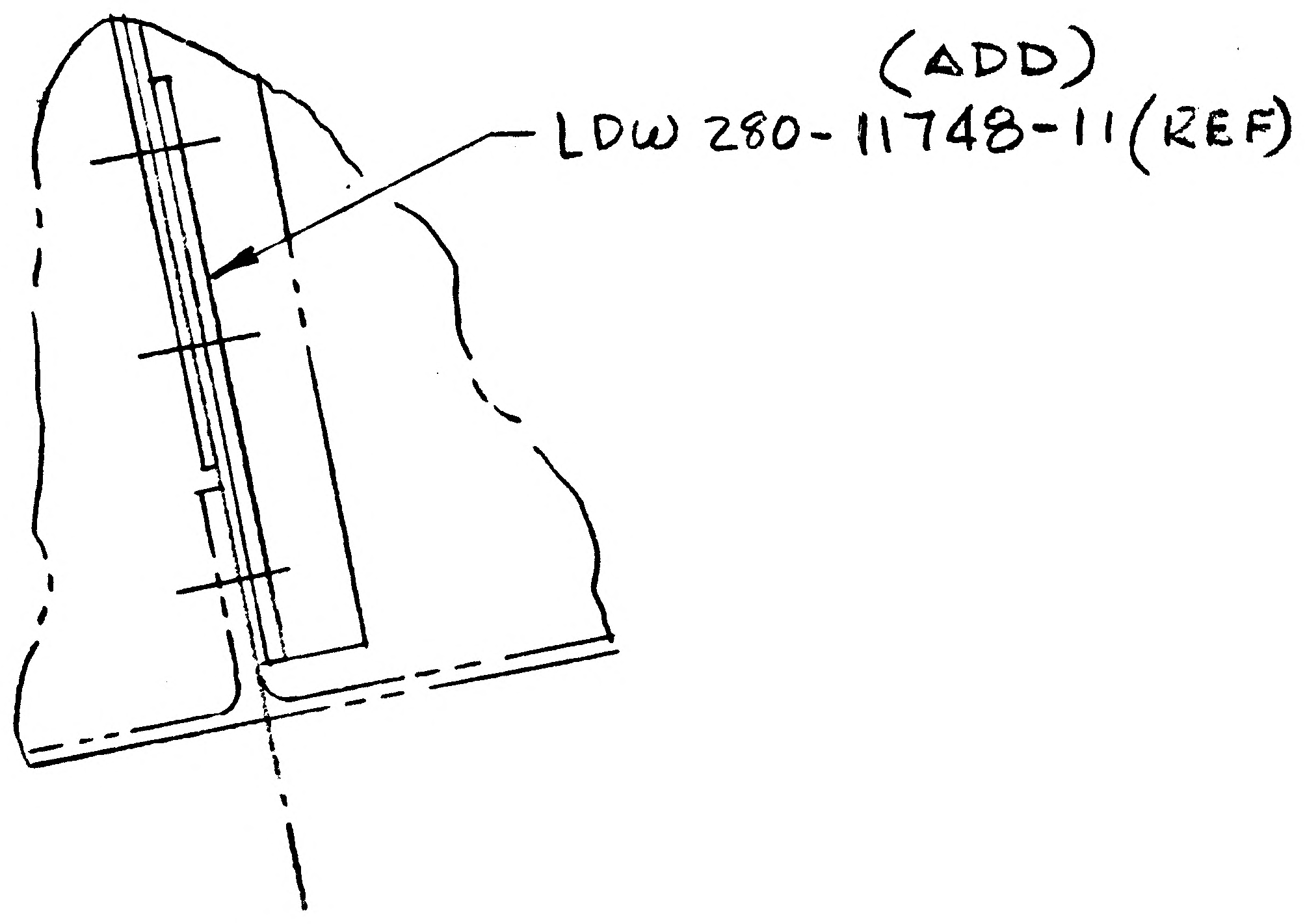

SECTION D-D (REF)

3

PRE-COLDFLOW 2
12-6

DETAIL SPEC REQ		CL II ENGRG CHG	✓	CL I ENGRG CHG	

REASON FOR EO: TO ADD LDW280-11748-11 AND TO REVISE PICTURE TO AGREE WITH LDW280-11676-11 CHG

DESCRIPTION OF EO: ON-1 ADDED LDW 280-11748-11 PLATE, TRIMMED LDW280-11676-11 TO AGREE WITH DETAIL CHG

GAEC EO RELEASE: ⊘ C FR 12/6/6

MODEL	PROCURING ACTIVITY NO.	GAEC UNIT NO.	SUB CONTR UNIT NO.
LM		LM-1 (31)	
LM		LM-2 (32	

DRAWING CHANGE REQD: REVISE DWG	RECORD EO	DISPOSITION OF PARTS: REWORK	SCRAP
✓		✓	

	VDI	SUPPORT	RELIAB. GROUP	GROUP LEADER	STRESS GROUP	LIAISON ENGRG	PROJ ENGRG	~~CONF~~
APPROVED BY				—				
DATE	12/6/66			—	12-6		12-6	12/6/66

5

PRIORITY: C

DRAWING TITLE: SUPPORT INSTALL - ASCENT STAGE MID SECTION ENGINE BELLOWS OX LINE

DRAWING NO.: LDW280-51846

EO NO.: A1

ISSUED BY VALENTINE 12/6/66 X1441 SECTION V.D.I. (PHILLIPS) GROUP NO. 335 PL 35

01 NAS 9-1100

ENG 32.2 REV 3-65

GRUMMAN AIRCRAFT ENGINEERING CORP.
CODE IDENT NO. 26512
ENGINEERING ORDER

DWG. NO.	LDW280-51346	EO NO.	A2
CONTROL INFO NO.	LM-5-9994		

IN B/M MS20470AD5 REMOVE A QTY OF (2) FROM -1 INSTL

IN B/M & F/D ADD GB511K-08-3 (2) BOLT & GN512H-08 (2) NUT TO -1 INSTL

IN F/D -1 INSTL

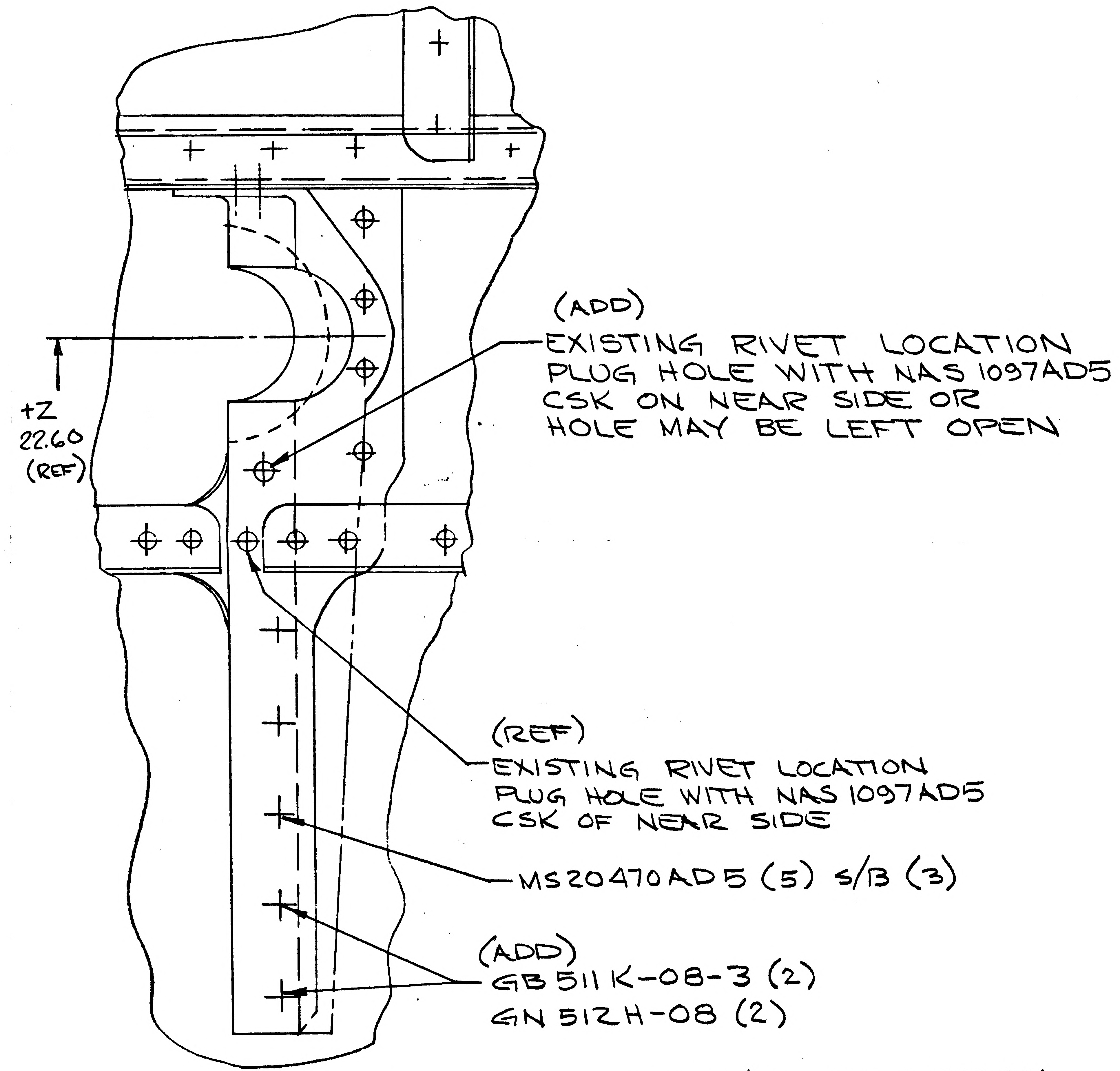
(ADD)
EXISTING RIVET LOCATION
PLUG HOLE WITH NAS 1097AD5
CSK ON NEAR SIDE OR
HOLE MAY BE LEFT OPEN
+Z
22.60
(REF)
(REF)
EXISTING RIVET LOCATION
PLUG HOLE WITH NAS 1097AD5
CSK OF NEAR SIDE
MS20470AD5 (5) S/B (3)
(ADD)
GB511K-08-3 (2)
GN512H-08 (2)

SECTION D-D

RELEASED BY LIAISON

01
NAS 9-1100

DETAIL SPEC REQ		CL II ENGRG CHG	
CL I ENGRG CHG			

REASON FOR EO: TO FACILITATE INSTL

DESCRIPTION OF EO:
IN B/M
REMOVED A QTY OF (2) MS20470AD5 FROM -1 INSTL
IN F/D & B/M ADDED GB511K-08-3 (2) & GN512H-08 (2)
IN F/D MS20470AD5 (3) WAS (5)

GAEC EO RELEASE: 5 C

MODEL	PROCURING ACTIVITY NO.	GAEC UNIT NO.	SUB CONTR UNIT NO.
LM		LM-1 (31)	
LM		LM-2 (32)	

DRAWING CHANGE REQD: REVISE DWG	RECORD EO	DISPOSITION OF PARTS: REWORK	SCRAP
✓		✓	

APPROVED BY	JaP				S.C.	CH		
DATE	1/17/67			1/17/67	12/5/66	12/5	12-20-66	12/5/66
1	VDI	SUPPORT	RELIAB. GROUP	GROUP LEADER	STRESS GROUP	LIAISON ENGRG	PROJ ENGRG	~~GOVT~~

PRIORITY: C

DRAWING TITLE: SUPPORT INSTL A/S MID SECT ENGINE BELLOWS OX LINE

DRAWING NO.: LDW280-51846

EO NO.: A2

ISSUED BY LIAISON J. McGILL /GL X6452 SECTION VDI GROUP NO.____ PL 35

LDW280-51849

MODEL OR END ITEM	NEXT ASSY	MODULE OR SER NO.	REQD PER MODULE OR END ITEM
LM	LDW280-53010	LM-3(33)	1
LM	LDW280-52010	LM-2(32)	1
LM	LDW280-51010	LM-1(31)	1

PART NO. LDW280-51849-1

GAEC SCH NO. 31

3

MODEL OR END ITEM	NEXT ASSY	MODULE OR SER NO.	REQD PER MODULE OR END ITEM

PART NO.

GAEC SCH NO.

MODEL OR END ITEM	NEXT ASSY	MODULE OR SER NO.	REQD PER MODULE OR END ITEM

PART NO.

GAEC SCH NO.

SH REV STATUS: FOR DESCRIPTION OF REV SEE SUBQ SH

SHEET	1.00		2.00	3.00					
REV									
SHEET									
REV									
SHEET									
REV									

LAST SECT LTR USED B-B

LAST DASH NO. USED -1

GRUMMAN RELC INFO

PRIM NO.	CE(001)	
215	MP-14	11-23-6

UNLESS OTHERWISE SPECIFIED DIMENSIONS ARE IN INCHES.

TOLERANCE UNLESS SPECIFIED FRACTIONS - DECIMALS - ANGLES ±1/32 ±.020 ±1/2°

ORIG DWG AUTH

DETAIL SPEC REQUIREMENT

CLASS II ENGRG CHANGE

CLASS I ENGRG CHANGE

CONTRACT NO. NAS 9-1100

LINE ITEM # 1

DOCUMENTATION TYPE II

DRAWN BY	P.CAPPADORO 11/17/66
LAYOUT BY	B.MANOS 11-19-66
CHECKED BY	EG GB 11-18-66
GR LEADER	11/21/66
VEH DES INT	11/21
STRUCTURE	BW 11-22
STRUCTURE	EP 11/22
WEIGHTS	
PROJ ENGR	R.M. Carlge 11-22-66
REL GROUP	11/23/66

GRUMMAN AIRCRAFT ENGRG CORP
BETHPAGE, L. I., NEW YORK

CLAMP & RELEASE INSTL
ASCENT STAGE CABIN -
FITH INSTRUMENTATION

SIZE	CODE IDENT NO.	
B	26512	LDW280-51849

SCALE NONE

SHEET 1.00 OF 3

ENG 77.1 12-65

CDR 11/25/66

01

NAS 9-1100

QTY PER ASSEMBLY -1	CODE IDENT	PART NO.	I&T	NOMENCLATURE OR DESCRIPTION	MATERIAL	GOVT SPEC	COML SPEC	STOCK SIZE	PROCESS SYM	FINISH NO.	ZONE
10		GN512H-08	E	COLLAR	GRUMMAN STD						
2		GB511K-08-9		PIN							
2		GB511K-08-5		PIN							
6		GB511K-08-3		PIN	GRUMMAN STD						
3		MS21042L06		NUT	STD PART						
		MS20470B3		RIVET							
		MS20470AD5		RIVET							
1		AN960D10L		WASHER							
6		AN960D6L		WASHER							
2		AN503-6-4		SCREW							
3		AN381-2-8		PIN-COTTER							
3		AN320D3		NUT							
1		AN42-11A		BOLT-EYE	STD PART						
1		LDW280P18167-3		SUPPORT ASSY	SEE DWG						
1		LDW280P11701-15		SPACER							
1		LDW280P11701-1		CLAMP ASSY							
1		LDW280M11244-11		SPRING FITTING							
2		LDW280M11243-15		SPACER							
1		LDW280M11243-13		SPACER							
1		LDW280M11243-11		SPACER							
1		LDW280M11242-11		SWIVEL							
2		LDW280M11241-11		ROD							
1		LDW280-11707-13		SHIELD							
1		LDW280-11700-11		TEE							
2		LDW280-11699-11		SPRING	SEE DWG						
		LDW280-51849-1	E	CLAMP & RELEASE INSTL					NONE	NONE	

SYM OR NO.	PROCESS OR FINISH	GRUMMAN SPEC OR MILITARY SPEC	SYM OR NO.	PROCESS OR FINISH	GRUMMAN SPEC OR MILITARY SPEC	SYM OR NO.	PROCESS OR FINISH	GRUMMAN SPEC OR MILITARY SPEC

I & T: IDENTIFICATION AND TRACEABILITY IN ACCORDANCE WITH : NONE

GRUMMAN AIRCRAFT ENGRG CORP, BETHPAGE, L. I., NEW YORK

SIZE	CODE IDENT NO.	
B	26512	LDW280-51849

SCALE NONE

SHEET 2.00

ENG 77.2 7-65

01

NAS 9-1100

NOTES
1. INSTALL FASTENERS PER LSP-14-15302 &
LSP-14-15306.
2. SHIM AS REQD USING AL ALLOY QQ-A-250/4
2024-T3 FINISH *88

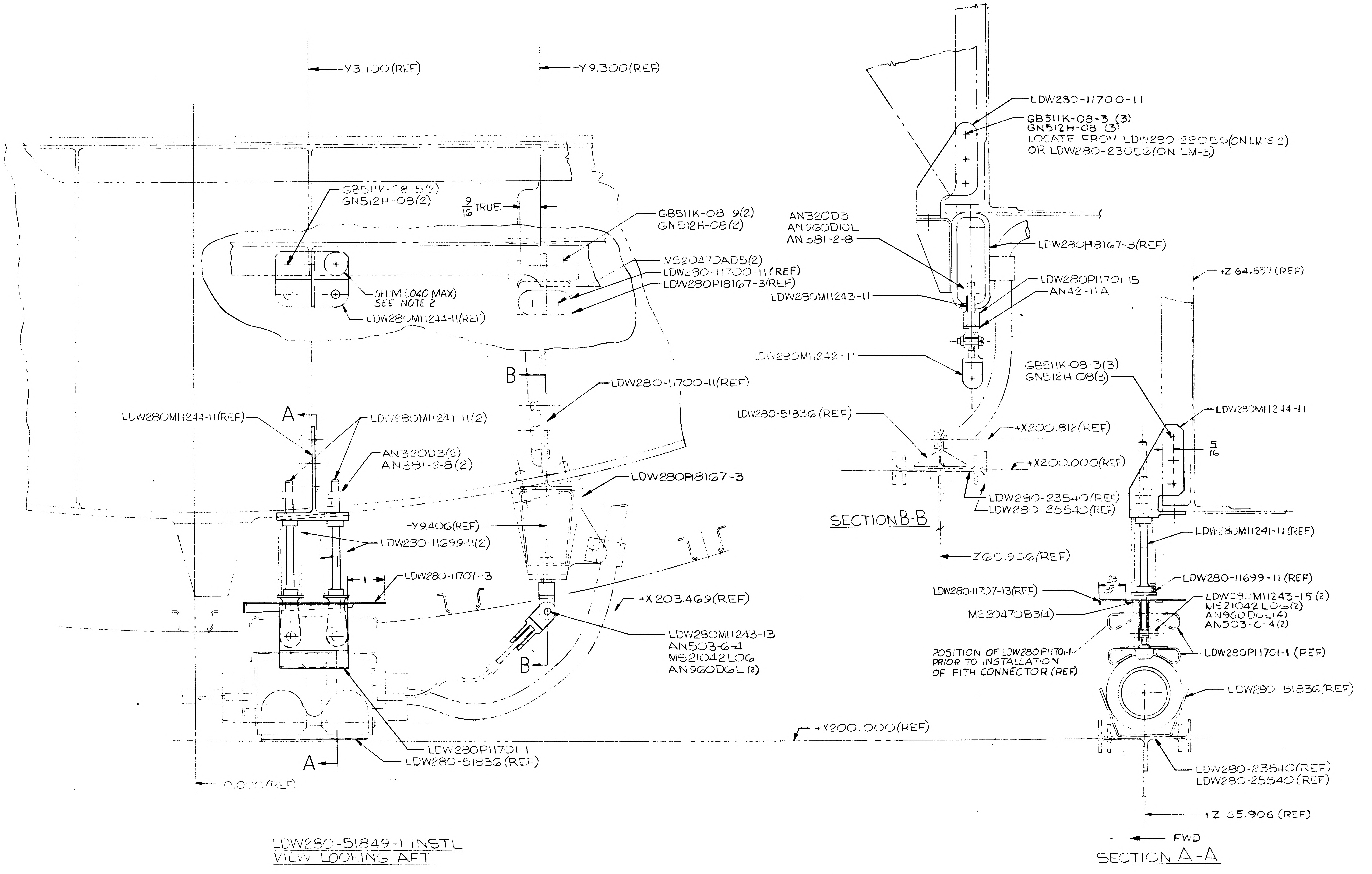

-Y3.100(REF)
-Y9.300(REF)
GB511K-08-5(2)
GN512H-08(2)
9/16 TRUE
GB511K-08-9(2)
GN512H-08(2)
MS20470AD5(2)
LDW280-11700-11(REF)
LDW280P18167-3(REF)
SHIM (.040 MAX)
SEE NOTE 2
LDW280M11244-11(REF)
B
LDW280-11700-11(REF)
LDW280M11244-11(REF)
A
LDW280M11241-11(2)
AN320D3(2)
AN381-2-8(2)
LDW280P18167-3
-Y9.406(REF)
LDW230-11699-11(2)
1
LDW280-11707-13
+X 203.469(REF)
LDW280M11243-13
AN503-6-4
MS21042L06
AN960D6L (2)
B
LDW280P11701-1
LDW280-51836(REF)
A
+X200.000(REF)
0.000(REF)
LDW280-11700-11
GB511K-08-3 (3)
GN512H-08 (3)
LOCATE FROM LDW280-23053(ON LM1&2)
OR LDW280-23056(ON LM-3)
AN320D3
AN960D10L
AN381-2-8
LDW280P18167-3(REF)
LDW280P11701-15
AN42-11A
LDW280M11243-11
LDW280M11242-11
LDW280-51836(REF)
+X200.812(REF)
+X200.000(REF)
LDW280-23540(REF)
LDW280-25540(REF)
Z65.906(REF)
+Z 64.557(REF)
GB511K-08-3(3)
GN512H 08(3)
LDW280M11244-11
5/16
LDW280M11241-11(REF)
LDW280-11699-11(REF)
23/32
LDW280-11707-13(REF)
LDW280M11243-15(2)
MS21042L06(2)
AN960D6L(4)
AN503-6-4(2)
MS20470B3(4)
POSITION OF LDW280P11701-1
PRIOR TO INSTALLATION
OF FITH CONNECTOR (REF)
LDW280P11701-1 (REF)
LDW280-51836(REF)
LDW280-23540(REF)
LDW280-25540(REF)
+Z 65.906 (REF)
FWD

LDW280-51849-1 INSTL
VIEW LOOKING AFT

SECTION B-B

SECTION A-A

MANUFACTURING OPERATIONS
UNLESS OTHERWISE SPECIFIED
NOTES CHECKED ✓ APPLY TO THIS DWG.

PART NUMBER
AND ALL OTHER MARKINGS
IN REGION MARKED ☒
USE BOTH SIDES IF NECESSARY.

FILLET AND INSIDE CORNER
RADII TOLERANCES
.016R TO .062R ± .010
.063R TO .250R ± .015
OVER .250R ± .030

DEPTH SHOWN FOR TAPPED
HOLES IS FULL THDS. 2-3 IMP. THDS.
BEYOND PERMISSIBLE

EXTERNAL THREAD LENGTH
SHOWN INCLUDES
2 IMPERFECT THREADS MAX.

DO NOT CADMIUM PLATE & PAINT
HOLES OR SURFACES MARKED
WITH DOUBLE ASTERISK

MISMATCH STEP OF ± .005
PERMISSIBLE DUE TO CHANGE
OF CUTTERS AT INSIDE
INTERSECTING SURFACES

DIAMETERS MARKED
MUST BE CONCENTRIC WITHIN
FULL INDICATOR
READING

HOLES MUST BE KEPT FREE OF
CHROME PLATING SOLUTION

ALL DIMENSIONS SHOWN TO BE MET
AFTER CADMIUM PLATING
THICKNESS OF PLATE .0003 MIN
TO .0005 MAX. MIN THICKNESS TO
BE .0002 ON THREADED AREAS
NO ALLOWANCES FOR PLATING IN
HOLES

125 SURFACE ROUGHNESS
INCLUDING REAMED HOLES
PER MIL STD 10

200 FOR ALL DRILLED HOLES

REMOVE ALL BURRS.
BREAK ALL EDGES .015 .031

INSPECTION INFORMATION
MINIMUM PERMISSIBLE
▬ EDGE DISTANCE
▬ IS 2 FASTENER ✓
[illegible] DIA FASTENER ℄

SYMBOL √ DENOTES SURFACE
TO BE MACHINED

UNLESS OTHERWISE SPECIFIED
TOLERANCE ON FLANGES IS ± 1/32

LENGTHS OF AN, NAS & MS AL ALY
RIVETS SHORTER THAN 1 INCH ARE
NOT SPECIFIED

TOLERANCE ON LOFTED
DELINEATIONS IS

01 NAS 9-1100

GRUMMAN AIRCRAFT ENGRG CORP. BETHPAGE, L. I., NEW YORK
SIZE E
CODE IDENT NO. 26512
LDW280-51849
MODEL OR END ITEM
SCALE
SHEET

LDW280-51849

LDW280-51849

ENG 32.1 REV 3-65

GRUMMAN AIRCRAFT ENGINEERING CORP.
CODE IDENT NO. 26512
ENGINEERING ORDER

DWG. NO. LDW280-51849		EO NO. A1
CONTROL INFO NO. LDW280A-4075		

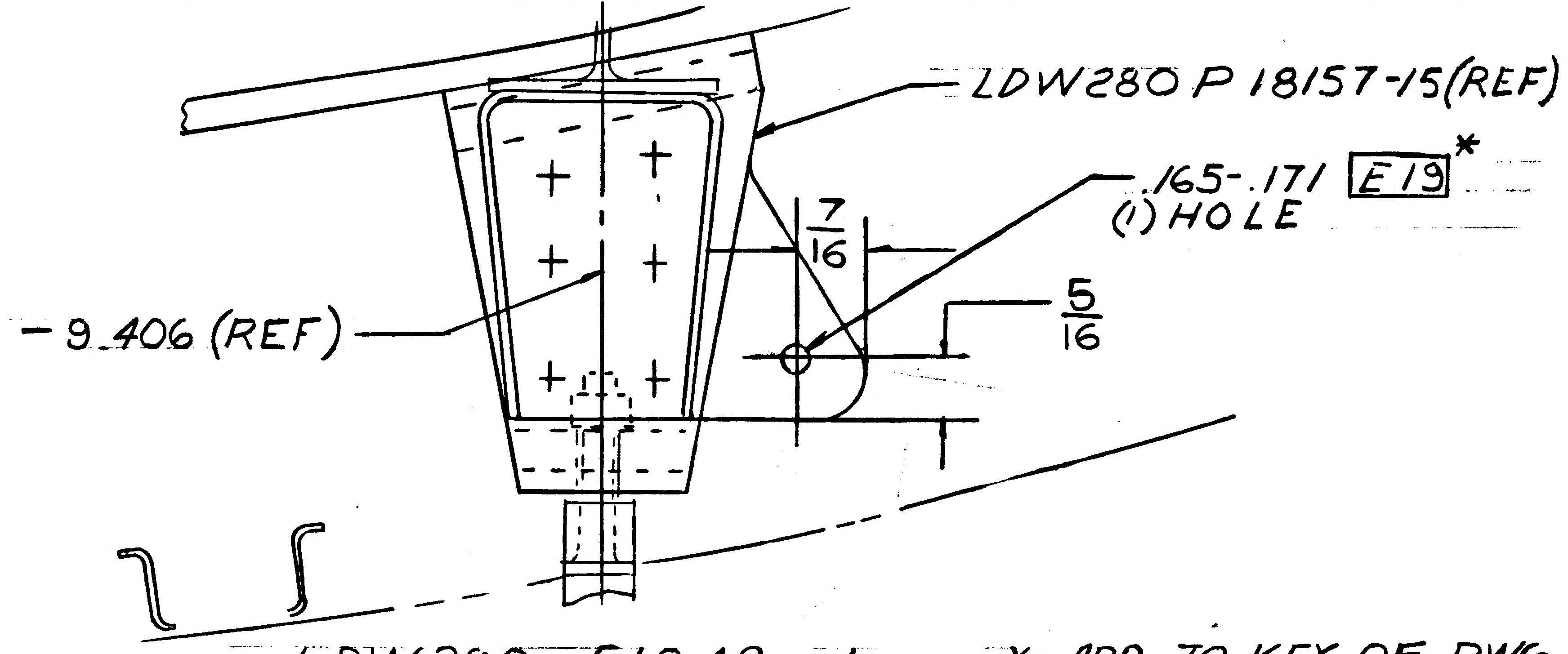

LDW280-51849 -1
VIEW LOOKING AFT
Z 65.057 (REF)

* ADD TO KEY OF DWG
E = ELECTRONICS

DETAIL SPEC REQ		CL II ENGRG CHG		CL I ENGRG CHG		PRE FEAT 3

REASON FOR EO	DESCRIPTION OF EO	GAEC EO RELEASE
SUPPORT FOR FIRE IN THE HOLE WIRING	ON-1 ADDED .165-.171 E19 * (1) HOLE & * ADDED TO KEY OF DWG E = ELECTRONICS	FR 12/6/66

MODEL	EFFECTIVITY PROCURING ACTIVITY NO.	GAEC UNIT NO.	SUB CONTR UNIT NO.
LM		LM-1 (31)	
LM		LM-2 (32)	
LM		LM-3 (33)	

DRAWING CHANGE REQD		DISPOSITION OF PARTS		APPROVED BY								
✓		✓		DATE	12/6/66			—	12-6		12/6/66	12-6-66
REVISE DWG	RECORD EO	REWORK	SCRAP	1	VD1	SUPPORT	RELIAB. GROUP	GROUP LEADER	STRESS GROUP	LIAISON ENGRG	PROJ ENGRG	GOVT

PRIORITY	DRAWING TITLE	DRAWING NO.	EO NO.
C	CLAMP AND RELEASE INSTL. ASCENT STAGE CABIN	LDW280-51849	A1

ISSUED BY S. Darcel (EX 7033) SECTION VD1 (EQUIP. LINES) GROUP NO. 332 PL 35

01 NAS 9-1100

B

ENG 32.1 REV 3-66

GRUMMAN AIRCRAFT ENGINEERING CORP.
CODE IDENT NO. 26512
ENGINEERING ORDER

DWG NO. LDW280-51849 EO NO. A2
CONTROL INFO NO. LM-5-12260

ON-1 AN320D3 (3) IN FLD. & B/M S/B
AN320-3 (3).
AN503-6-4(3) S/B NAS 1216-06-10(3).

RELEASED BY LIAISON

DETAIL SPEC REQ	☐	CL II ENGRG CHG	☐	CL I ENGRG CHG	☐	3

REASON FOR EO	DESCRIPTION OF EO	✓ GAEC C EO RELEASE
HARDWARE CALLED FOR ON DWG. NOT AVAILABLE	ON-1 AN320-3(3) WAS AN320-D3 (3) & NAS 1216-06-10(3) WAS AN503-6-4 (3)	FR 05 023

MODEL	EFFECTIVITY: PROCURING ACTIVITY NO.	EFFECTIVITY: GAEC UNIT NO.	EFFECTIVITY: SUB CONTR UNIT NO.
LM		LM-1 (31)	
		LM-2 (32)	
		LM-3 (33)	

DRAWING CHANGE REQD: REVISE DWG	DRAWING CHANGE REQD: RECORD EO	DISPOSITION OF PARTS: REWORK	DISPOSITION OF PARTS: SCRAP
✓		✓	

	VDI	SUPPORT	RELIAB. GROUP	GROUP LEADER	STRESS GROUP	LIAISON ENGRG	PROJ ENGRG	~~CONT~~
APPROVED BY	RP			—	DFJ	CH	RMC	
DATE	3/1/67			—	2-13-67	2/13/67	2-17-67	2/13/67

PRIORITY	DRAWING TITLE	DRAWING NO.	EO NO.
C	CLAMP & RELEASE INSTL. A/S-CABIN-FIFTH INSTRUMENTATION	LDW280-51849	A2

ISSUED BY LIAISON J. JARVIS SECTION V.D.I. GROUP NO. 280 PL 35

01

NAS 9-1100

B

ENG 32.1 REV 3-65

GRUMMAN AIRCRAFT ENGINEERING CORP.
CODE IDENT NO. 26512
ENGINEERING ORDER

*

DWG. NO. LDW 280-51849	EO NO. A3
CONTROL INFO NO. LM-5-12283	

ON -1

THIS EO CANCELS EO A2

SHT 3.00

IN ZONE C-2
IN CALLOUT LDW 280M11243-15(2)
MS21042L06 (2)
AN960D6L(4)
AN503-6-4(2) S/B GB511J-6-4(2)

IN ZONE C-4
IN CALLOUT LDW 280M11243-13
AN503-6-4 S/B GB511J-6-5
MS21042L06
AN960D6L(2)

IN ZONE E-3
IN CALLOUT LDW 280P11701-15
AN42-11A S/B AN42-11

IN ZONE E-4
IN CALLOUT AN320D3 S/B AN320-3
AN960D10L
AN381-2-8

IN ZONE D-6
IN CALLOUT AN320D3(2) S/B AN320-3(2)
AN381-2-8(2)

SHT 2.00

IN B/M AN42-11A S/B AN42-11 , AN320D3(3) S/B AN320-3(3)
DELETE AN503-6-4 (3)
ADD GB511J-6-4 (2)
GB511J-6-5

RELEASED BY LIAISON

DETAIL SPEC REQ		CL II ENGRG CHG		CL I ENGRG CHG		3

REASON FOR EO	DESCRIPTION OF EO	GAEC EO RELEASE
To PROVIDE PROPER HARDWARE	-1 IN F/D & B/M AN42-11 WAS AN42-11A GB511J-6-4(2) WAS AN503-6-4(2) GB511J-6-5 WAS AN503-6-4 AN320-3(3) WAS AN320D3(3)	C FK

MODEL	PROCURING ACTIVITY NO.	GAEC UNIT NO.	SUB CONTR UNIT NO.
LM		LM-1 (31)	
		LM-2 (32)	
		LM-3 (33)	

DRAWING CHANGE REQD		DISPOSITION OF PARTS									
✓		✓		APPROVED BY				—		CH	RME
				DATE	2/9/67			—	2-14-67	2-14-67	2-17-67
REVISE DWG	RECORD EO	REWORK	SCRAP	1	VD1	SUPPORT	RELIAB. GROUP	GROUP LEADER	STRESS GROUP	LIAISON ENGRG	PROJ ENGRG

~~GOVT~~ 2/15/67

PRIORITY	DRAWING TITLE	DRAWING NO.	EO NO.
C5	CLAMP & RELEASE INSTL ASCENT STAGE CABIN INSTRUMENTATION	LDW 280-51849	A3

ISSUED BY LIAISON A. VENTO X-6216 SECTION FIFTH VD1 GROUP NO. 335 PL 35

01 NAS 9-1100

B

ENG 32.2 REV 3-65

GRUMMAN AIRCRAFT ENGINEERING CORP.
CODE IDENT NO. 26512
ENGINEERING ORDER

*

DWG. NO. LDW280-51349		EO NO. A4	
CONTROL INFO NO. LM5-11839			

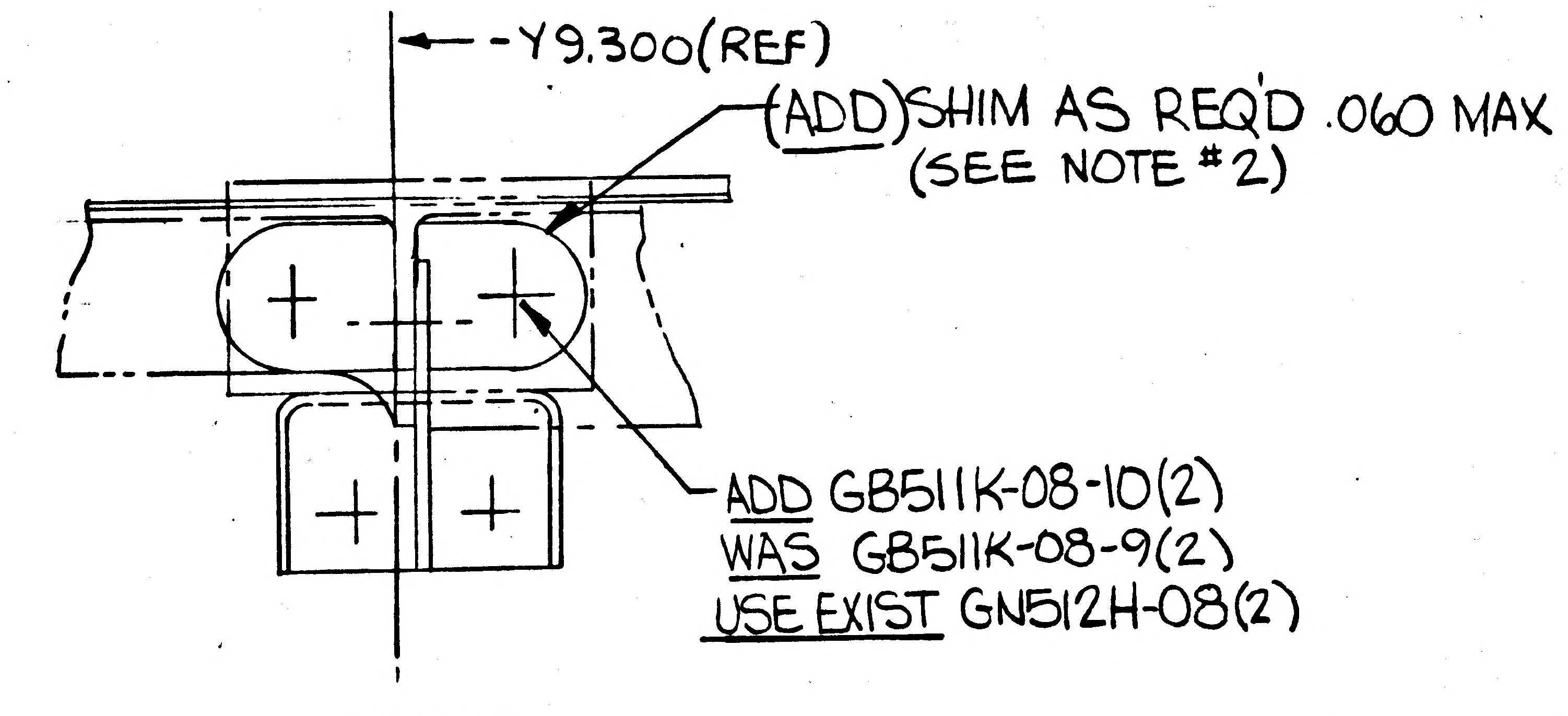
-Y9.300(REF)
(ADD) SHIM AS REQ'D .060 MAX
(SEE NOTE #2)
ADD GB511K-08-10(2)
WAS GB511K-08-9(2)
USE EXIST GN512H-08(2)

LKG DN

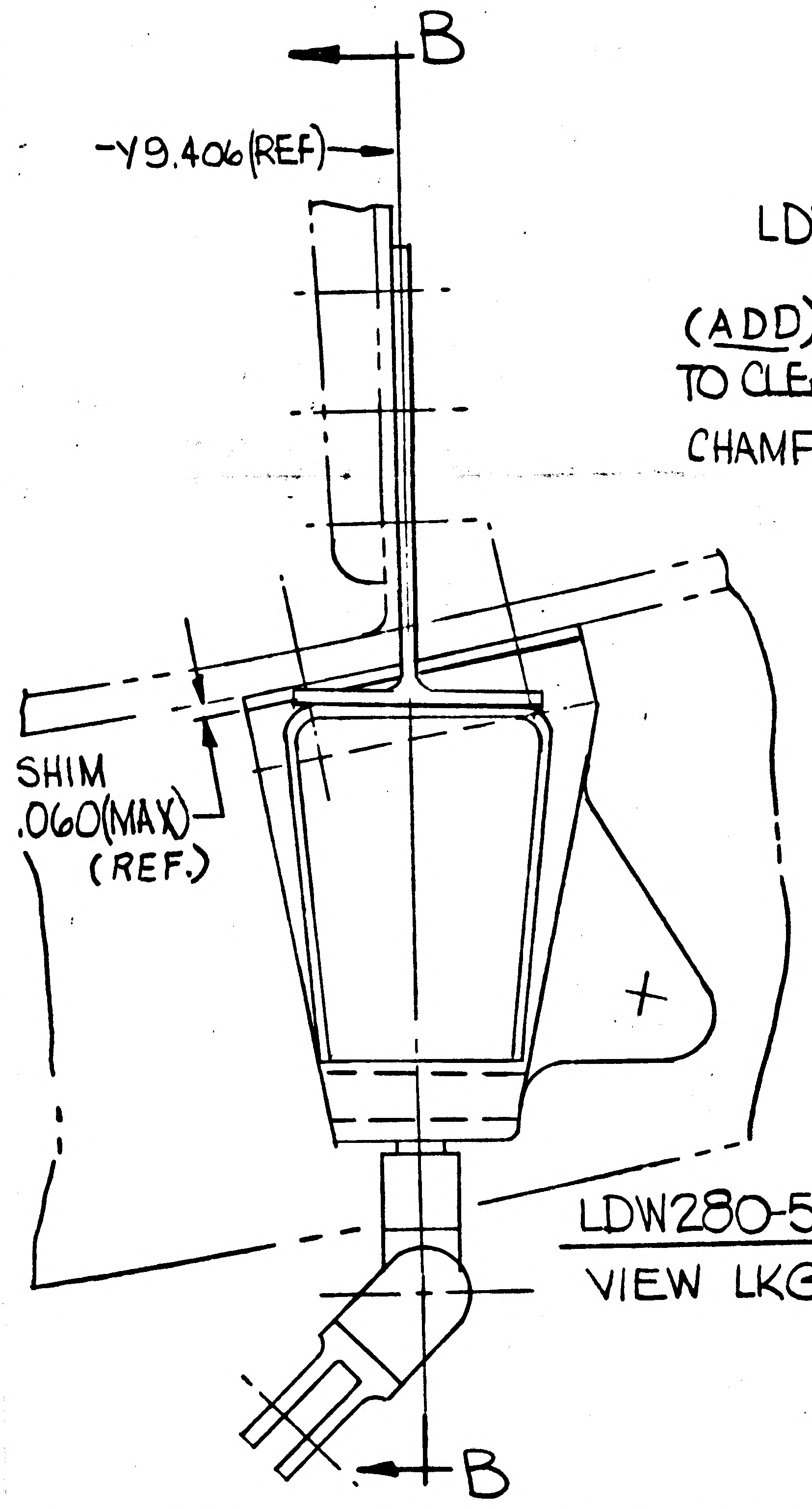
B
-Y9.406(REF)
SHIM
.060(MAX)
(REF.)
B

LDW280-51849-1 INSTL
VIEW LKG AFT

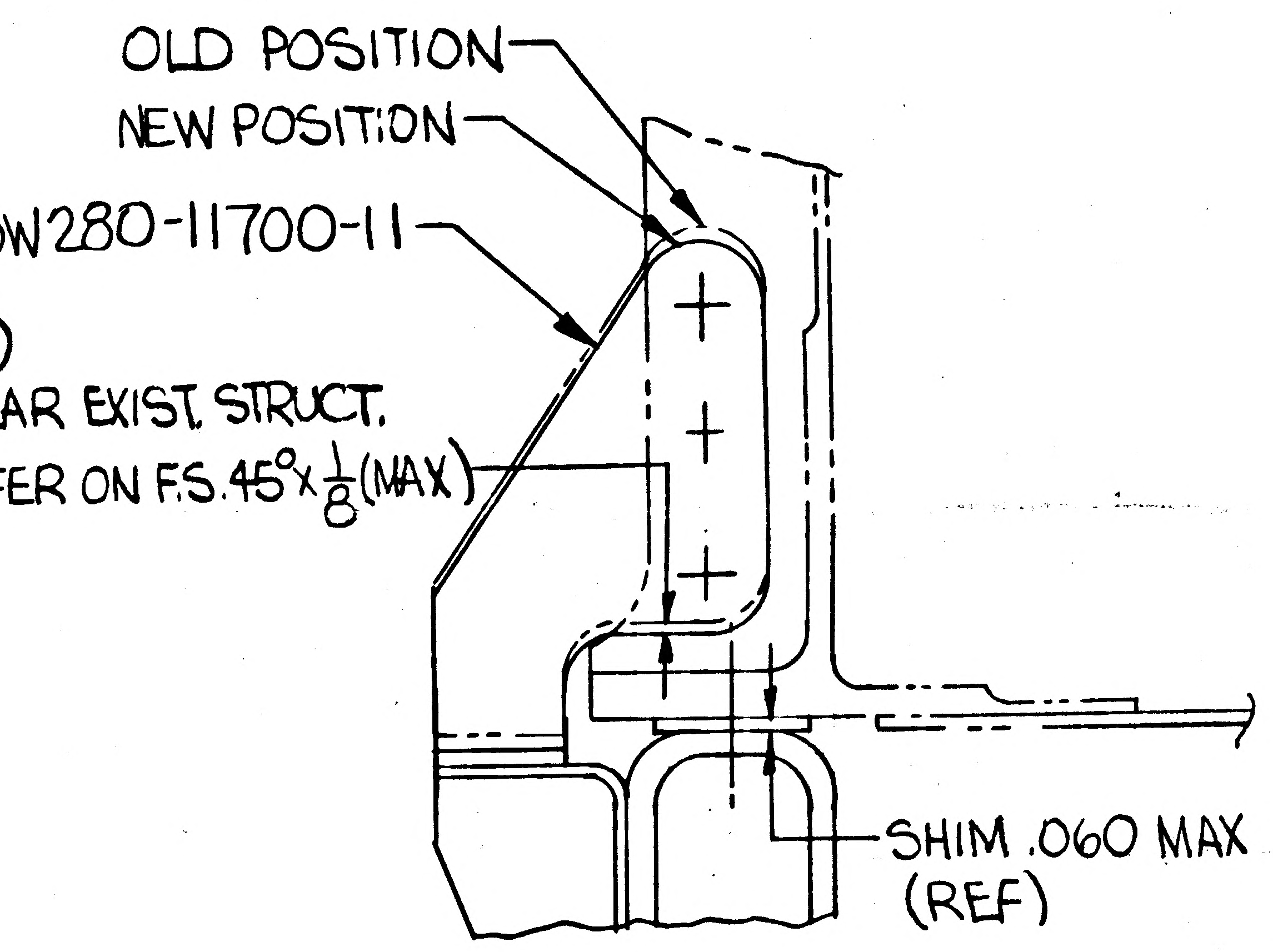
OLD POSITION
NEW POSITION
LDW280-11700-11
(ADD)
TO CLEAR EXIST. STRUCT.
CHAMFER ON F.S. 45° x 1/8 (MAX)
SHIM .060 MAX
(REF)

SECT B-B

RELEASED BY LIAISON

DETAIL SPEC REQ		CL II ENGRG CHG		CL I ENGRG CHG									5
REASON FOR EO: TO GAIN EDGE DISTANCE				DESCRIPTION OF EO: ON-1 ADDED .060 SHIM & GB511K-08-10(2) WAS GB511K-08-9(2). ADDED CHAM. % TO SECT. B-B									Ⓟ GAEC C EO RELEASE J/4
MODEL	EFFECTIVITY			DRAWING CHANGE REQD		DISPOSITION OF PARTS		APPROVED BY	WT			~	JFJ
	PROCURING ACTIVITY NO.	GAEC UNIT NO.	SUB CONTR UNIT NO.	✓		✓		DATE	2/14/67			~	2-16-67
LM		LM-1 (31)		REVISE DWG	RECORD EO	REWORK	SCRAP	1	VDI	SUPPORT	RELIAB. GROUP	GROUP LEADER	STRESS GROUP
		LM-2 (32)		PRIORITY C	DRAWING TITLE: CLAMP & RELEASE INSTL ~ A/S CABIN FITH INSTRUMENTATION					DRAWING NO. LDW280-51849		EO NO. A4	
		LM-3 (33)											

LIAISON ENGRG	PROJ ENGRG	~~SUPP~~
2-15-67	RMcC (EW) 2-21-67	2/17/67

ISSUED BY Louis Berlinquette 2/14/67 SECTION VD1 GROUP NO. 335 PL 5

01
NAS 9-1100

LDW280-51851 B

MODEL OR END ITEM	NEXT ASSY	MODULE OR SER NO. / GAEC SCH NO.	REQD PER MODULE OR END ITEM
PART NO.			

MODEL OR END ITEM	NEXT ASSY	MODULE OR SER NO. / GAEC SCH NO.	REQD PER MODULE OR END ITEM
LM	LDW280-51150	LM-1(31)	1 EA
PART NO. LDW280-51851-9,-11, -13 & -15			

MODEL OR END ITEM	NEXT ASSY	MODULE OR SER NO. / GAEC SCH NO.	REQD PER MODULE OR END ITEM
LM	LDW280-5115C	LM-2(32)	1EA
PART NO. LDW280-51851-1,-3-5 & -7		30 —	

5

SH REV STATUS: FOR DESCRIPTION OF REV SEE SUBQ SH

SHEET	1.00	1.10	1.11	2.00	2.01	3.00	4.00		
REV	B	B	B	B	B	B	B		
SHEET									
REV									
SHEET									
REV									

LAST SECT LTR USED L-L
LAST DASH NO. USED -15
GRUMMAN REL INFO B
PRIM NO. 215 (K001) MP IB-11/8/67

UNLESS OTHERWISE SPECIFIED DIMENSIONS ARE IN INCHES.
TOLERANCE UNLESS SPECIFIED FRACTIONS - DECIMALS – ANGLES ±1/32 ±.020 ±1/2°
ORIG DWG AUTH
DETAIL SPEC REQUIREMENT
CLASS II ENGRG CHANGE
CLASS I ENGRG CHANGE

CONTRACT NO. NAS9-1100
LINE ITEM # 1
DOCUMENTATION TYPE II

DRAWN BY	GIERAK SUPPA 9-10-66	THERMO	10/26
LAYOUT BY	MAKULA		
CHECKED BY	9-12-66		
GR LEADER	9/19		
VEH DES INT			
STRUCTURES	9/21	PROJ ENGR	R.M. Carbee (E) 9-28
STRUCTURES	HILDERMAN 9/27	REL GROUP	10/26/66
WEIGHTS	10-5		

GRUMMAN AIRCRAFT ENGRG CORP
BETHPAGE, L. I., NEW YORK

PANEL INSTALLATION
ASCENT STAGE MID SECT
FWD & AFT TANK BLKH'D

SIZE B
CODE IDENT NO. 26512
LDW280-51851 B (B)
SCALE NONE
SHEET 1.00 OF 7

ENG 77.1 12-65

C.D.R. 9-30-66

01

NAS 9-1100

REVISIONS

CHANGE LTR	ITEM NO.	SHEET NO.	ZONE	GRUMMAN INFO ONLY	DET SPEC	CLASS I	CLASS II	ENGRG ORDER	DESCRIPTION	EFFECTIVITY	DISPOSITION OF EXISTING PARTS		CHANGED BY AND DATE	ENGRG APPD	GOVT APPD
											REWORK	SCRAP			
A	1	1.00, 1.10 2.01, 3.00	4A				✓	EO A1	ON-3 INSTL ADDED MS20470B3(6) WAS MS20470B3(4). GS550K-04-1 (4), NAS680AD4(4), NAS463W-D10M(4), MS20426AD3 (8), .115-.120(#32 DRILL) 4 HOLES, CSK NS WAS .115-.120(#32 DRILL) 6 HOLES, NAS697C04(6), GS550K-04-1(6), MS20470AD3(12). ADDED SH 1.10 & SH 2.01.	LM-1 (31) LM-2 (32)	✓		B. REYES 11/6/67		
	2	1.00, 2.01, 4.00	13A 18A 16C					EO A2	ON-7 INSTL ADDED LDW280-28178(REF), NAS680A04(4), NAS463W-D10M(4), MS20426AD3(8), GS550K-04-1(4), DRILL #32(.115-.120), CSK NS & ADDED SECTION G-G. ON-5 VIEW LKG FWD LH SIDE WAS VIEW LKG AFT LH SIDE & ON-7 VIEW LKG AFT LH SIDE WAS VIEW LKG FWD LH SIDE.	LM-1(32) LM-2(32)	✓				
	3	2.00 3.00 4.00	9A 3A 18A 13A				✓	EO A3	IN FLD/DWG: FOR -5 & -7, ADDED .436-.443(7/16 DRILL)(13) TO BE COORDINATED WITH LDW280-28892. FOR -1 & -3, ADDED .436-.443 (7/16 DRILL)(12) TO BE COORDINATED WITH LDW280-28891. ADDED, LDW280-14344-7(25)	LM-1(32) LM-2(32)	✓				
	4	2.00					✓	EO A4	ON-1 REMOVED LDW280-11451-1, -17 & -19. ADDED LDW280-11451-3, -25 & -27.	LM-1(31) LM-2(32)	✓				
	5	3.00	2C		✓			LE0280-497	ADDED NOTE 2; MATERIAL, FINISHES, HANDLING AND PERMISSIBLE DEVIATIONS PER LPC-280-16	LM-1(31) LM-2(32)	✓				
	6	1.10 2.01 & 4.00	17B				✓	EO A6	ON-5 INSTL, IN B/M & FLD LDW280-11524-21 REPLACES LDW280-11524-17	LM-1(31) LM-2(32)	✓				
	7						✓	EO A7	CANCELLED BY EO A10	LM-1(31) LM-2(32)	✓				
	8	2.00 3.00	3B 4A			✓		EO A8 LCD1069 CCA553	ON-3 INSTL: REMOVED LDW280P11485-3. ADDED LDW280P11485-5, LDW280-11304-25 & -27, NAS697C04 (6), GB511J-04-1(10), NAS1097B3 (12) & LDW280-11450-23. ADDED VIEW H-H.	LM-1(31) LM-2(32)	✓				
	9					✓		EO A9 LCD1097 CCA553	REF EO A8: IN-3, REMOVED LDW280P11485-11 WAS REMOVED LDW280P11485-3	LM-1 (31) LM-2(32)	✓				
	10						✓	EO A10	CANCELLED E.O. #A7	LM-1(31) LM-2(32)	✓		WS		
B	1	1.00, 2.00 2.01, 3.00 4.00	8A 14A 18A			✓		EO B1 LCD1847	REMOVED LM-1 EFF FROM -1, -3, -5 & -7 & CREATED -9, -11, -13 & -15 INSTL'S. REVISED EO A6 (LDW280-11524-23 WAS -21) ADDED SECT'S J-J & L-L, (ADDED NOTE 3 & SHEET 2.01)	LM-1(31) LM-2(32)	✓				

CHG APPROVED	LTR	GROUP LDR	VEH DES INT	STRUCT	STRUCT	WEIGHTS	RELIABILITY				
	B										

FOR CONTINUATION OF REVISIONS SEE SHEET 1.11

GRUMMAN AIRCRAFT ENGRG CORP, BETHPAGE, L. I., NEW YORK

SIZE	CODE IDENT NO.		
B	26512	LDW280-51851	B
SCALE NONE			SHEET 1.10

(B)

ENG 77.3 5-65

01

NAS 9-1100

REVISIONS

CHANGE LTR	ITEM NO.	SHEET NO.	ZONE	GRUMMAN INFO ONLY	DET SPEC	CLASS I	CLASS II	ENGRG ORDER	DESCRIPTION	EFFECTIVITY	DISPOSITION OF EXISTING PARTS REWORK	DISPOSITION OF EXISTING PARTS SCRAP	CHANGED BY AND DATE	ENGRG APPD	GOVT APPD
B	2	4.00 2.01	18C			✓		EOB2 LCD 1847 A.B	ON-13: ADDED SECT K-K (ZONE 18C, SH 4) ADDED LDW280-11524-33, LDW280-10743-17(5) & MS20470B4 (5) REMOVED LDW280-11524-23 (ADDED SHT 1.11)	LM-1(31)	✓		E. REYES 11-7-67 W.S. T.S.	X	X

CHG APPROVED LTR	GROUP LDR	VEH DES INT	STRUCT	STRUCT	RELIABILITY					
B										

FOR CONTINUATION OF REVISIONS SEE SHEET ______

GRUMMAN AIRCRAFT ENGRG CORP, BETHPAGE, L. I., NEW YORK

SIZE	CODE IDENT NO.		
B	26512	LDW280-51851	B
SCALE NONE		SHEET 1.11	

ENG 77.3 5-65

01

NAS 9-1100

QTY PER ASSEMBLY										PART NO.	I&T	CODE IDENT	NOMENCLATURE OR DESCRIPTION	MATERIAL	GOVT SPEC	COML SPEC	STOCK SIZE	PROCESS SYM	FINISH NO.	ZONE
		-15	-13	-11	-9	-7	-5	-3	-1											
					1					LDW280-11451-43	E		SHIELD	SEE DWG						7A
					1					-41										8A
									1	-27										7A
									1	-25										8A
					1					-5										8A
									1	LDW280-11451-3			SHIELD							8A
				1						LDW280-11450-27			SHIELD							3A
				1						-25										4A
								1		-23										3A
				1				1		-17										4B
								1		LDW280-11450-15			SHIELD							4A
		1								LDW280-11443-25			SHIELD							12C
		1								-23										13B
						1				-21										12C
		1				1				-19										13C
						1				LDW280-11443-17			SHIELD							13B
				1				1		LDW280-11304-27			ANGLE							4A
				1				1		LDW280-11304-25			ANGLE							4A
		8	10		13					LDW280-10743-45			WASHER							7A
		6	21		6					LDW280-10743-17			WASHER	SEE DWG						18B
										LDW280-51851-15			SHIELD INSTL					NONE	NONE	13A
										-13										18A
										-11										4A
										-9										8A
										-7										13A
										-5										18A
										-3										4A
										LDW280-51851-1	E		SHIELD INSTL					NONE	NONE	8A

SYM OR NO.	PROCESS SYM OR FINISH NO.	GRUMMAN SPEC OR MILITARY SPEC	SYM OR NO.	PROCESS SYM OR FINISH NO.	GRUMMAN SPEC OR MILITARY SPEC	SYM OR NO.	PROCESS SYM OR FINISH NO.	GRUMMAN SPEC OR MILITARY SPEC

I & T: IDENTIFICATION AND TRACEABILITY IN ACCORDANCE WITH NONE

GRUMMAN AIRCRAFT ENGRG CORP., BETHPAGE, L. I., NEW YORK

SIZE	CODE IDENT NO.		
B	26512	LDW280-51851	B

SCALE NONE

SHEET 2.00

ENG 77.2 5-64

01

NAS 9-1100

QTY PER ASSEMBLY																		
-15	-13	-11	-9	-7	-5	-3	-1	PART NO.	I&T	CODE IDENT	NOMENCLATURE OR DESCRIPTION	MATERIAL	GOVT SPEC	COML SPEC	STOCK SIZE	PROCESS SYM	FINISH NO.	ZONE
4		4		4		4		NAS463W-D10M			SHIM	STD PART						
		12				12		NAS1097B3			RIVET							
4		4		4		4		NAS680A04			NUT PLATE							
		6				6		NAS697C04			NUT PLATE							
8		8		8		8		MS20426AD3			RIVET							
	21		6					MS20470B4										
		6				6		MS20470B3										
								MS20470AD3			RIVET	STD PART						
8	10		13.					GS550K-04-7			SCREW	GRUMMAN STD						
4		4		4		4		GS550K-04-1			SCREW	GRUMMAN STD						
		10				10		GB511J-04-1			BOLT	GRUMMAN STD						
8	10		13.					GR11C-5			RETAINER	GRUMMAN STD						
					1			LDW280-11524-23	E		SHIELD	SEE DWG						17B
		1				1		LDW280P11485-5	E		BOOT	SEE DWG						3A
1				1				LDW280P11518-1			FAIRING ASSY							12B
		1				1		LDW280-288834			COVER INSTL							4A
5	8	9	2	13	18	9	15.	LDW280-14344-7			SCREW ASSY							4B
	1							LDW280-11524-25			SHIELD							18B
	1							-33			SHIELD							17B
	1				1			-15			SHIELD							8C
					1			-13			SHIELD							18B
	1							-3			SHIELD ASSY							19B
					1			LDW280-11524-1	E		SHIELD ASSY	SEE DWG						19B

SYM OR NO.	PROCESS SYM OR FINISH NO.	GRUMMAN SPEC OR MILITARY SPEC	SYM OR NO.	PROCESS SYM OR FINISH NO.	GRUMMAN SPEC OR MILITARY SPEC	SYM OR NO.	PROCESS SYM OR FINISH NO.	GRUMMAN SPEC OR MILITARY SPEC

I&T: IDENTIFICATION AND TRACEABILITY IN ACCORDANCE WITH NONE

GRUMMAN AIRCRAFT ENGRG CORP., BETHPAGE, L. I., NEW YORK

SIZE	CODE IDENT NO.		
B	26512	LDW280-51851	B

SCALE NONE

SHEET 2.01

ENG 77.2 5-64

01

NAS 9-1100

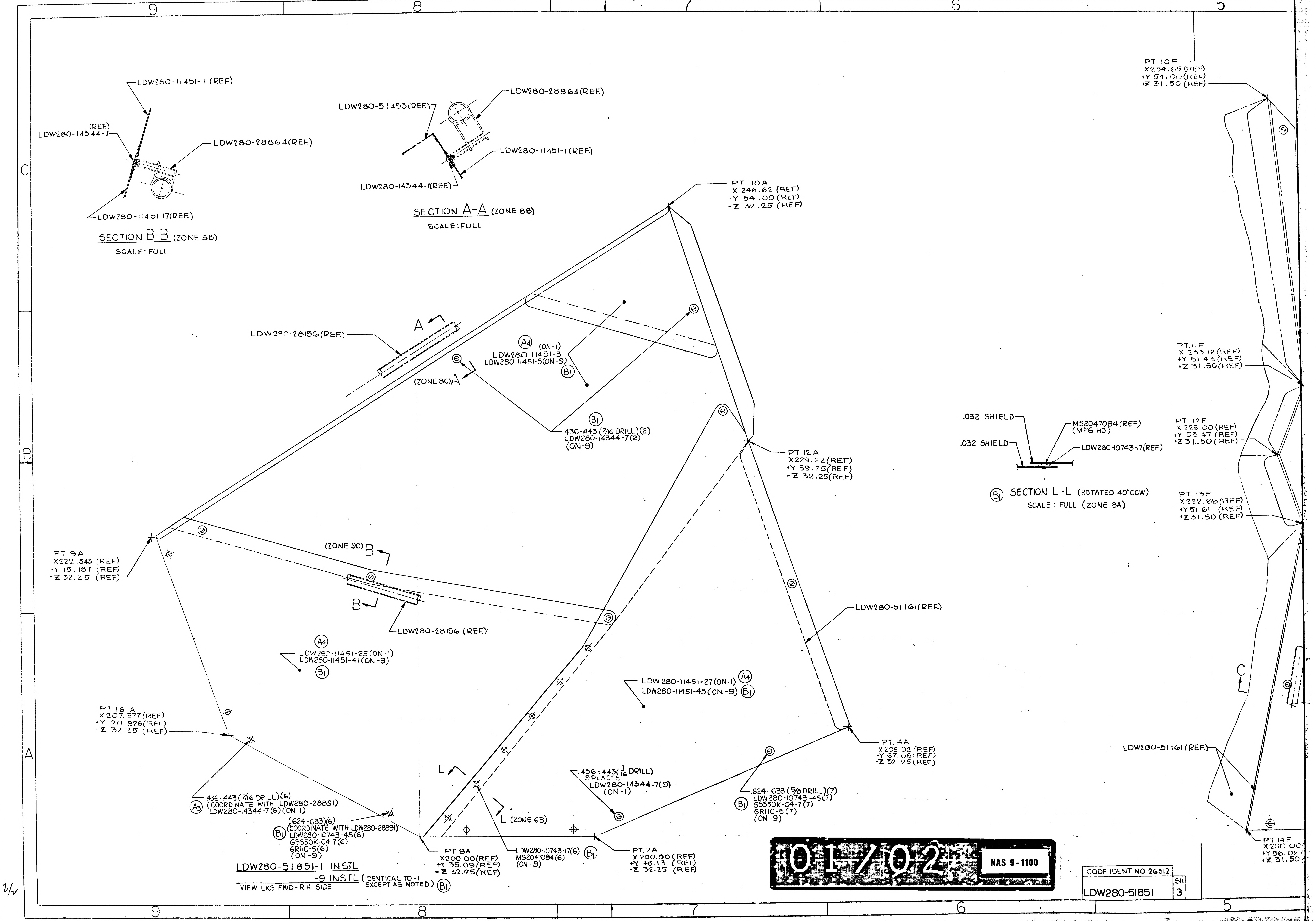
9
8
7
6
5
C
B
A
LDW280-11451-1 (REF.)
(REF.)
LDW280-14344-7
LDW280-28864(REF.)
LDW280-11451-17(REF.)
SECTION B-B (ZONE 8B)
SCALE: FULL
LDW280-51453(REF.)
LDW280-28864(REF.)
LDW280-11451-1(REF.)
LDW280-14344-7(REF.)
SECTION A-A (ZONE 8B)
SCALE: FULL
PT 10A
X 246.62 (REF)
+Y 54.00 (REF)
-Z 32.25 (REF)
LDW280-28156(REF.)
A
(ZONE 8C) A
A4
(ON-1)
LDW280-11451-3
LDW280-11451-5(ON-9)
B1
B1
436-443 (7/16 DRILL)(2)
LDW280-14344-7(2)
(ON-9)
PT 12A
X229.22(REF)
+Y 59.75(REF)
-Z 32.25(REF)
PT 9A
X222 343 (REF)
+Y 15.187 (REF)
-Z 32.25 (REF)
(ZONE 9C) B
B
LDW280-28156 (REF.)
LDW280-51161(REF.)
A4
LDW280-11451-25 (ON-1)
LDW280-11451-41 (ON-9)
B1
LDW 280-11451-27 (ON-1) A4
LDW280-11451-43 (ON-9) B1
PT 16 A
X 207.577 (REF)
+Y 20.826 (REF)
-Z 32.25 (REF)
436-443 (7/16 DRILL)(6)
A3 (COORDINATE WITH LDW280-28891)
LDW280-14344-7(6)(ON-1)
(.624-.633)(6)
(COORDINATE WITH LDW280-28891)
B1 LDW280-10743-45(6)
GS550K-04-7(6)
GR11C-5(6)
(ON-9)
L
L (ZONE 6B)
.436-.443(7/16 DRILL)
9 PLACES
LDW280-14344-7(9)
(ON-1)
.624-.633 (5/8 DRILL)(7)
B1 LDW280-10743-45(7)
GS550K-04-7(7)
GR11C-5(7)
(ON-9)
PT. 14A
X 208.02 (REF)
+Y 67.08 (REF)
-Z 32.25 (REF)
PT. 8A
X200.00(REF)
+Y 35.09(REF)
-Z 32.25(REF)
LDW280-10743-17(6) B1
MS20470B4(6)
(ON-9)
PT. 7A
X 200.00 (REF)
+Y 48.13 (REF)
-Z 32.25 (REF)
.032 SHIELD
.032 SHIELD
MS20470B4(REF)
(MFG HD)
LDW280-10743-17(REF)
B1 SECTION L-L (ROTATED 40° CCW)
SCALE : FULL (ZONE 8A)
PT 10F
X254.65 (REF)
+Y 54.00 (REF)
+Z 31.50 (REF)
PT. 11F
X 233.18 (REF)
+Y 51.43 (REF)
+Z 31.50 (REF)
PT. 12F
X 229.00 (REF)
+Y 53.47 (REF)
+Z 31.50 (REF)
PT. 13F
X 222.88 (REF)
+Y 51.61 (REF)
+Z 31.50 (REF)
C
LDW280-51161(REF.)
PT 14F
X200.0
+Y 56.0
+Z 31.50

LDW280-51851-1 INSTL
-9 INSTL (IDENTICAL TO -1 EXCEPT AS NOTED) B1
VIEW LKG FWD - R.H. SIDE

01/02

NAS 9-1100

CODE IDENT NO 26512	SH
LDW280-51851	3

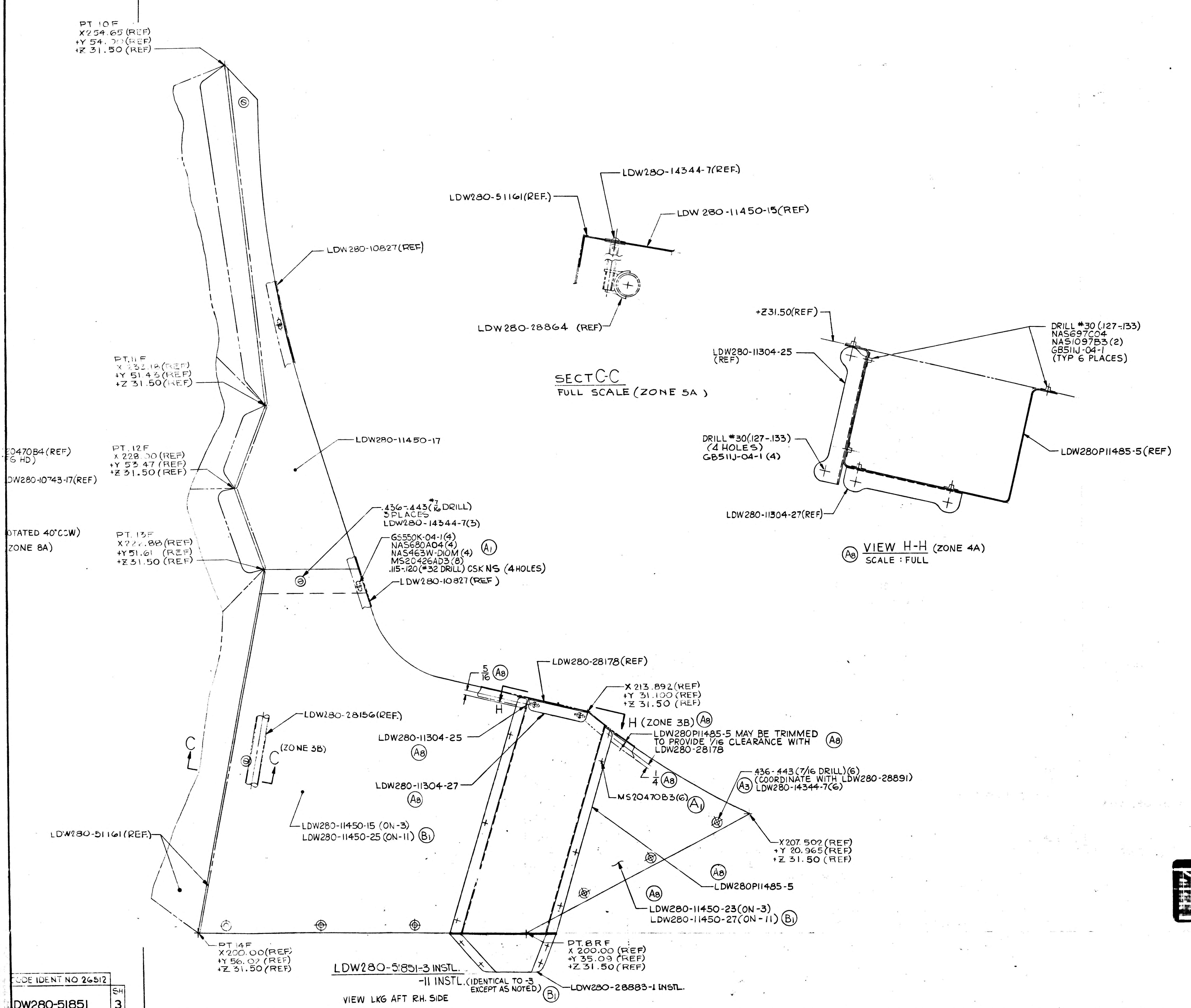
PT 10F
X254.65 (REF)
+Y 54.?? (REF)
+Z 31.50 (REF)
LDW280-10827(REF)
PT.11F
X 233.18 (REF)
+Y 51.43 (REF)
+Z 31.50 (REF)
20470B4 (REF)
FG HD)
DW280-10743-17(REF)
PT. 12F
X 228.?0 (REF)
+Y 53.47 (REF)
+Z 31.50 (REF)
LDW280-11450-17
OTATED 40°CCW)
ZONE 8A)
PT. 13F
X222.88 (REF)
+Y 51.61 (REF)
+Z 31.50 (REF)
.436-.443 (7/16 DRILL)
3 PLACES
LDW280-14344-7(3)
GS550K-04-1(4)
NAS680A04(4)
NAS463W-D10M (4)
MS20426AD3(8)
.115-.120 (#32 DRILL) CSK NS (4 HOLES)
A1
LDW280-10827(REF)
LDW280-14344-7(REF.)
LDW280-51161(REF.)
LDW 280-11450-15(REF)
LDW280-28864 (REF)
SECT C-C
FULL SCALE (ZONE 5A)
+Z31.50(REF)
LDW280-11304-25
(REF)
DRILL #30 (.127-.133)
NAS697C04
NAS1097B3 (2)
GB511J-04-1
(TYP 6 PLACES)
DRILL #30 (.127-.133)
(4 HOLES)
GB511J-04-1 (4)
LDW280P11485-5(REF)
LDW280-11304-27(REF)
A8 VIEW H-H (ZONE 4A)
SCALE : FULL
5/16 A8
LDW280-28178(REF)
X 213.892 (REF)
+Y 31.100 (REF)
+Z 31.50 (REF)
H
H (ZONE 3B) A8
LDW280P11485-5 MAY BE TRIMMED
TO PROVIDE 1/16 CLEARANCE WITH
LDW280-28178
A8
LDW280-11304-25
A8
LDW280-11304-27
A8
1/4 A8
MS20470B3(6) A1
436-.443 (7/16 DRILL)(6)
(COORDINATE WITH LDW280-28891)
A3 LDW280-14344-7(6)
LDW280-28156(REF.)
C
C (ZONE 3B)
LDW280-11450-15 (ON-3)
LDW280-11450-25 (ON-11) B1
LDW280-51161(REF.)
X 207.502 (REF)
+Y 20.965 (REF)
+Z 31.50 (REF)
A8
LDW280P11485-5
A8
LDW280-11450-23 (ON-3)
LDW280-11450-27 (ON-11) B1
PT 14F
X200.00 (REF)
+Y 56.02 (REF)
+Z 31.50 (REF)
PT. 8RF
X 200.00 (REF)
+Y 35.09 (REF)
+Z 31.50 (REF)
LDW280-51851-3 INSTL.
-11 INSTL. (IDENTICAL TO -3 EXCEPT AS NOTED) B1
LDW280-28883-1 INSTL.
VIEW LKG AFT R.H. SIDE

NOTES:
1-INSTL FASTENERS PER LSP14-15302.
2- MATERIAL, FINISHES, HANDLING AND PERMISSIBLE DEVIATIONS PER LPC-280-16
3-THIS DWG WHEN USED FOR DELIVERED VEHICLES IS AFFECTED BY LFM #26.

MANUFACTURING OPERATIONS UNLESS OTHERWISE SPECIFIED NOTES CHECKED ✓ APPLY TO THIS DWG.	
PART NUMBER AND ALL OTHER MARKINGS IN REGION MARKED ⊠ USE BOTH SIDES IF NECESSARY.	
FILLET AND INSIDE CORNER RADII TOLERANCES .016R TO .062R ± .010 .063R TO .250R ± .015 OVER .250R ± .030	
DEPTH SHOWN FOR TAPPED HOLES IS FULL THDS. 2-3 IMP THDS. BEYOND PERMISSIBLE.	
EXTERNAL THREAD LENGTH SHOWN INCLUDES 2 IMPERFECT THREADS MAX.	
DO NOT CADMIUM PLATE & PAINT HOLES OR SURFACES MARKED WITH DOUBLE ASTERISK.	
MISMATCH STEP OF ± .005 PERMISSIBLE DUE TO CHANGE OF CUTTERS AT INSIDE INTERSECTING SURFACES.	
DIAMETERS MARKED MUST BE CONCENTRIC WITHIN FULL INDICATOR READING	
HOLES MUST BE KEPT FREE OF CHROME PLATING SOLUTION.	
ALL DIMENSIONS SHOWN TO BE MET AFTER CADMIUM PLATING. THICKNESS OF PLATE .0003 MIN. TO .0005 MAX. MIN. THICKNESS TO BE .0002 ON THREADED AREAS. NO ALLOWANCE FOR PLATING IN HOLES	
125 SURFACE ROUGHNESS INCLUDING REAMED HOLES PER MIL-STD-10	
200 FOR ALL DRILLED HOLES	
REMOVE ALL BURRS. BREAK ALL EDGES .015-.031	
INSPECTION INFORMATION MINIMUM PERMISSIBLE AVERAGE EDGE DISTANCE MARKED IS	
SYMBOL √ DENOTES SURFACE TO BE MACHINED	
UNLESS OTHERWISE SPECIFIED TOLERANCE ON FLANGES IS ± 1/32	
LENGTHS OF AN, NAS & MS AL ALY RIVETS SHORTER THAN 1 INCH ARE NOT SPECIFIED.	✓
TOLERANCE ON LOFTED DELINEATIONS IS	

DWG SIZE 34 X 88

PRINTING INFO ONLY
FULL SIZE SHEET AREA (36 X 90)= 22.5 SQ. FT.
1/2 SIZE SHEET AREA (1/4 OF FULL)= 5.6 SQ. FT.

PRINT TRIM LINE

LDW280-51851 B

LDW280-51851 B

02/02

NAS 9-1100

CODE IDENT NO 26512	SH
LDW280-51851	3

	GRUMMAN AIRCRAFT ENGRG CORP., BETHPAGE, L. I., NEW YORK			
	SIZE J	CODE IDENT NO. 26512	LDW280-51851	B
LEM MODEL OR END ITEM	SCALE 1/2 & NOTED		SHEET 3.00	

01/04 NAS 9-1100

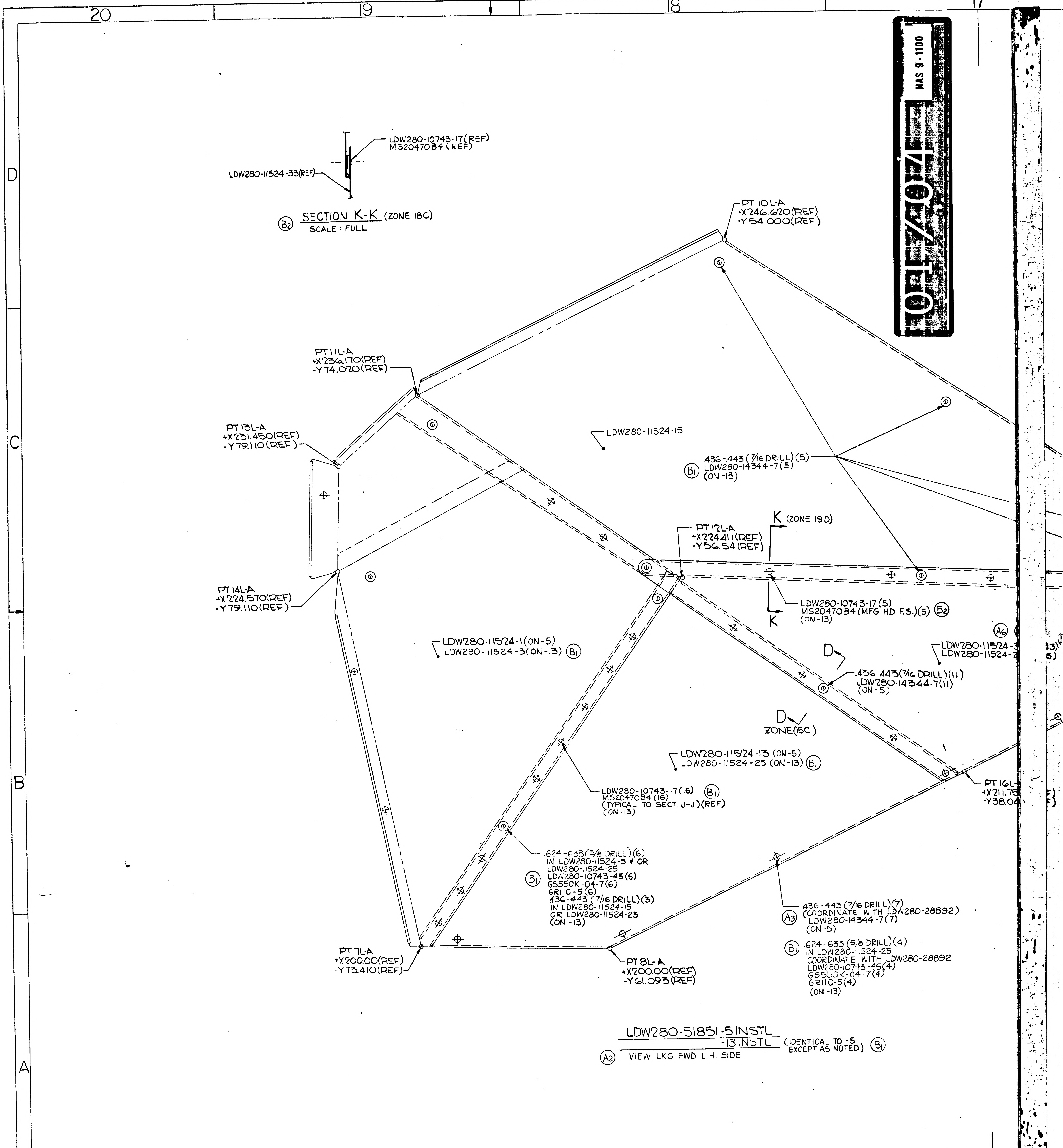
20
19
18
17
D
C
B
A
LDW280-10743-17(REF)
MS20470B4(REF)
LDW280-11524-33(REF)
(B2) SECTION K-K (ZONE 18C)
SCALE : FULL
PT 10L-A
+X246.620(REF)
-Y54.000(REF)
PT 11L-A
+X236.170(REF)
-Y74.020(REF)
PT 13L-A
+X231.450(REF)
-Y79.110(REF)
LDW280-11524-15
.436-.443 (7/16 DRILL)(5)
(B1) LDW280-14344-7(5)
(ON-13)
K (ZONE 19D)
PT 12L-A
+X224.411(REF)
-Y56.54(REF)
PT 14L-A
+X224.570(REF)
-Y79.110(REF)
LDW280-10743-17(5)
MS20470B4(MFG HD F.S.)(5) (B2)
(ON-13)
K
(A6)
LDW280-11524-3
LDW280-11524-2
LDW280-11524-1(ON-5)
LDW280-11524-3(ON-13) (B1)
D
.436-.443(7/16 DRILL)(11)
LDW280-14344-7(11)
(ON-5)
D
ZONE(15C)
LDW280-11524-13 (ON-5)
LDW280-11524-25 (ON-13) (B1)
PT 16L-
+X211.75
-Y38.04
LDW280-10743-17(16) (B1)
MS20470B4(16)
(TYPICAL TO SECT. J-J)(REF)
(ON-13)
.624-.633(5/8 DRILL)(6)
IN LDW280-11524-3 & OR
LDW280-11524-25
(B1) LDW280-10743-45(6)
GS550K-04-7(6)
GR11C-5(6)
.436-.443 (7/16 DRILL)(3)
IN LDW280-11524-15
OR LDW280-11524-23
(ON-13)
.436-.443 (7/16 DRILL)(7)
(A3) (COORDINATE WITH LDW280-28892)
LDW280-14344-7(7)
(ON-5)
(B1) .624-.633 (5/8 DRILL)(4)
IN LDW280-11524-25
COORDINATE WITH LDW280-28892
LDW280-10743-45(4)
GS550K-04-7(4)
GR11C-5(4)
(ON-13)
PT 7L-A
+X200.00(REF)
-Y73.410(REF)
PT 8L-A
+X200.00(REF)
-Y61.093(REF)

LDW280-51851-5 INSTL
-13 INSTL (IDENTICAL TO -5 EXCEPT AS NOTED) (B1)
(A2) VIEW LKG FWD L.H. SIDE

CODE IDENT NO 26512	
LDW280-51851	SH 4

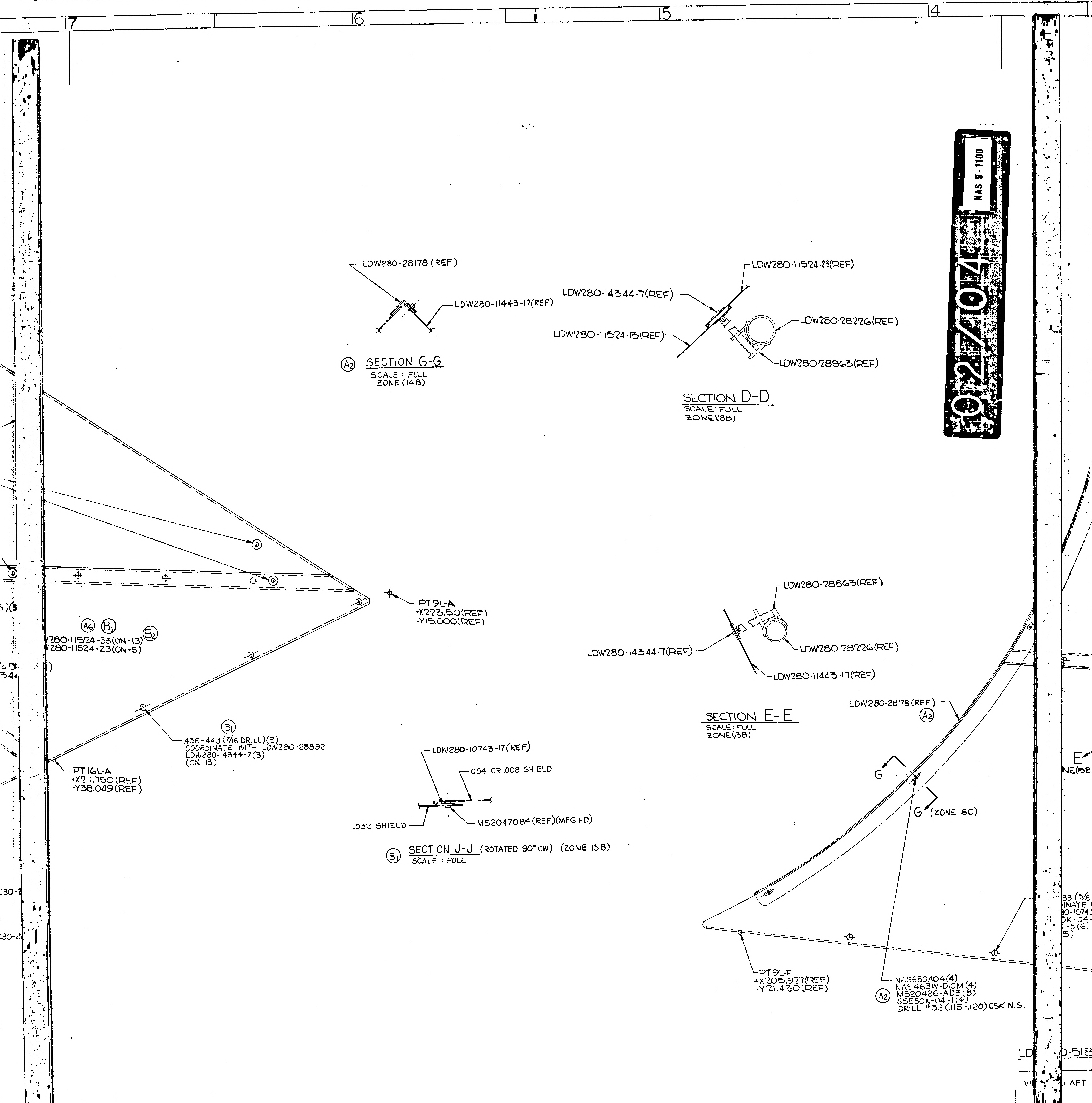
17
16
15
14
LDW280-28178 (REF)
LDW280-11443-17(REF)
(A2) SECTION G-G
SCALE : FULL
ZONE (14 B)
LDW280-11524-23(REF)
LDW280-14344-7(REF)
LDW280-28226(REF)
LDW280-11524-13(REF)
LDW280-28863(REF)
SECTION D-D
SCALE: FULL
ZONE(18B)
PT9L-A
+X223.50(REF)
-Y15.000(REF)
(A6) (B1) (B2)
280-11524-33(ON-13)
280-11524-23(ON-5)
LDW280-28863(REF)
LDW280-14344-7(REF)
LDW280-28226(REF)
LDW280-11443-17(REF)
SECTION E-E
SCALE: FULL
ZONE(13B)
LDW280-28178 (REF)
(A2)
(B1)
436-443 (7/16 DRILL)(3)
COORDINATE WITH LDW280-28892
LDW280-14344-7(3)
(ON-13)
PT 16L-A
+X211.750 (REF)
-Y38.049(REF)
LDW280-10743-17(REF)
.004 OR .008 SHIELD
.032 SHIELD
MS20470B4 (REF)(MFG HD)
(B1) SECTION J-J (ROTATED 90° CW) (ZONE 13B)
SCALE : FULL
G
G (ZONE 16C)
E
PT9L-F
+X205.927(REF)
-Y21.430(REF)
NAS680A04(4)
NAS463W-D10M(4)
(A2) MS20426-AD3(8)
GS550K-04-1(4)
DRILL #32(.115-.120) CSK N.S.

02/04 NAS 9-1100

CODE IDENT NO 26512

LDW280-51851 SH 4

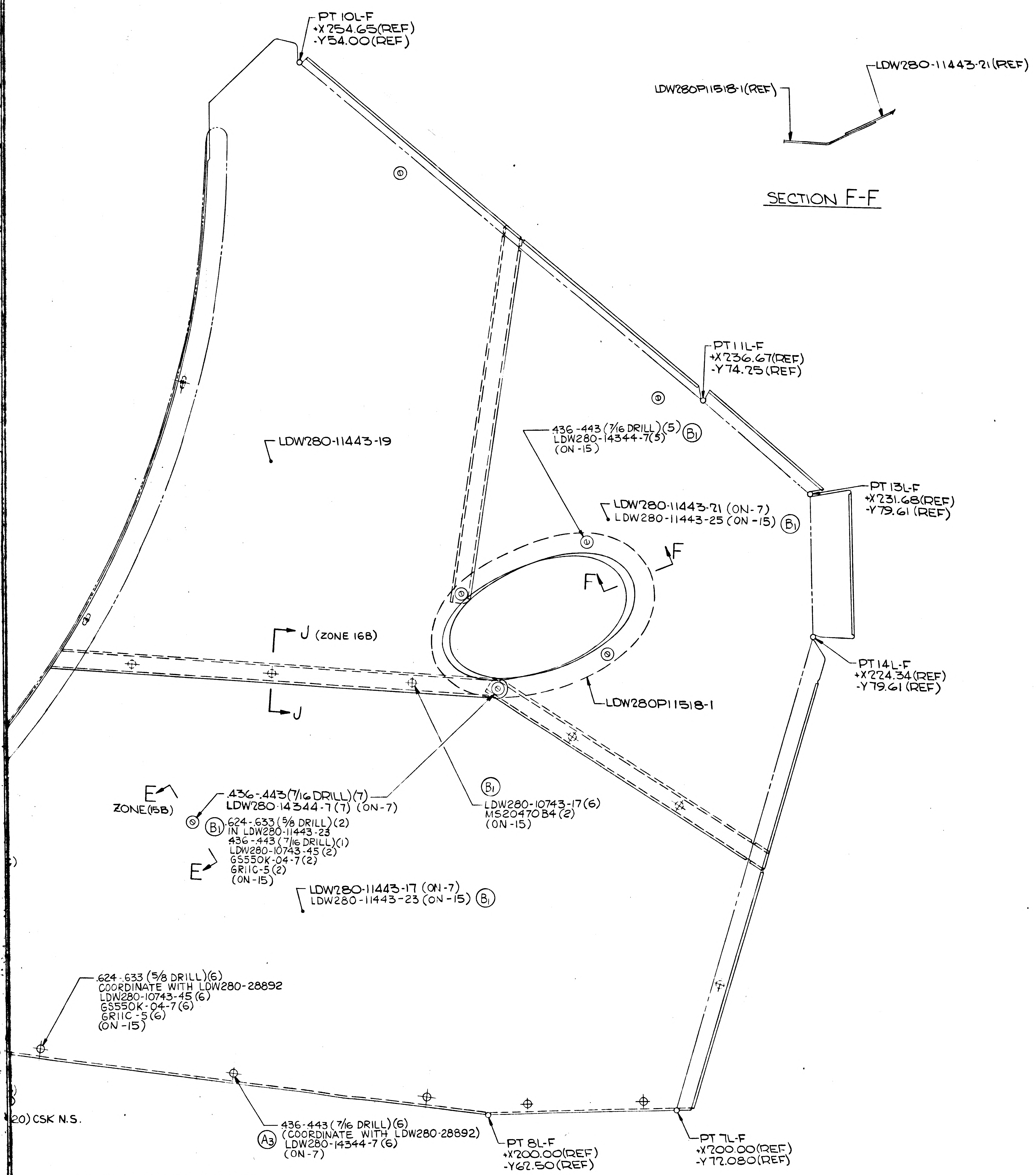
PT 10L-F
+X254.65(REF)
-Y54.00(REF)
LDW280P11518-1(REF)
LDW280-11443-21(REF)
SECTION F-F
PT 11L-F
+X236.67(REF)
-Y74.25(REF)
LDW280-11443-19
.436-.443 (7/16 DRILL)(5)
LDW280-14344-7(5) (B1)
(ON-15)
LDW280-11443-21 (ON-7)
LDW280-11443-25 (ON-15) (B1)
F
F
PT 13L-F
+X231.68(REF)
-Y79.61 (REF)
J (ZONE 16B)
J
PT 14L-F
+X224.34(REF)
-Y79.61 (REF)
LDW280P11518-1
E
ZONE(15B)
.436-.443(7/16 DRILL)(7)
LDW280-14344-7(7) (ON-7)
(B1) .624-.633 (5/8 DRILL)(2)
IN LDW280-11443-23
.436-.443 (7/16 DRILL)(1)
LDW280-10743-45 (2)
GS550K-04-7(2)
GR11C-5(2)
(ON-15)
E
(B1)
LDW280-10743-17(6)
MS20470B4(2)
(ON-15)
LDW280-11443-17 (ON-7)
LDW280-11443-23 (ON-15) (B1)
.624-.633 (5/8 DRILL)(6)
COORDINATE WITH LDW280-28892
LDW280-10743-45 (6)
GS550K-04-7(6)
GR11C-5(6)
(ON-15)
20) CSK N.S.
.436-.443 (7/16 DRILL)(6)
(A3) (COORDINATE WITH LDW280-28892)
LDW280-14344-7 (6)
(ON-7)
PT 8L-F
+X200.00(REF)
-Y62.50(REF)
PT 7L-F
+X200.00(REF)
-Y72.080(REF)

LDW280-51851-7 INSTL
-15 INSTL (IDENTICAL TO -7 EXCEPT AS NOTED)

VIEW LKG AFT L.H. SIDE

03704 NAS 9-1100

CODE IDENT NO 26512
LDW280-51851 SH 4

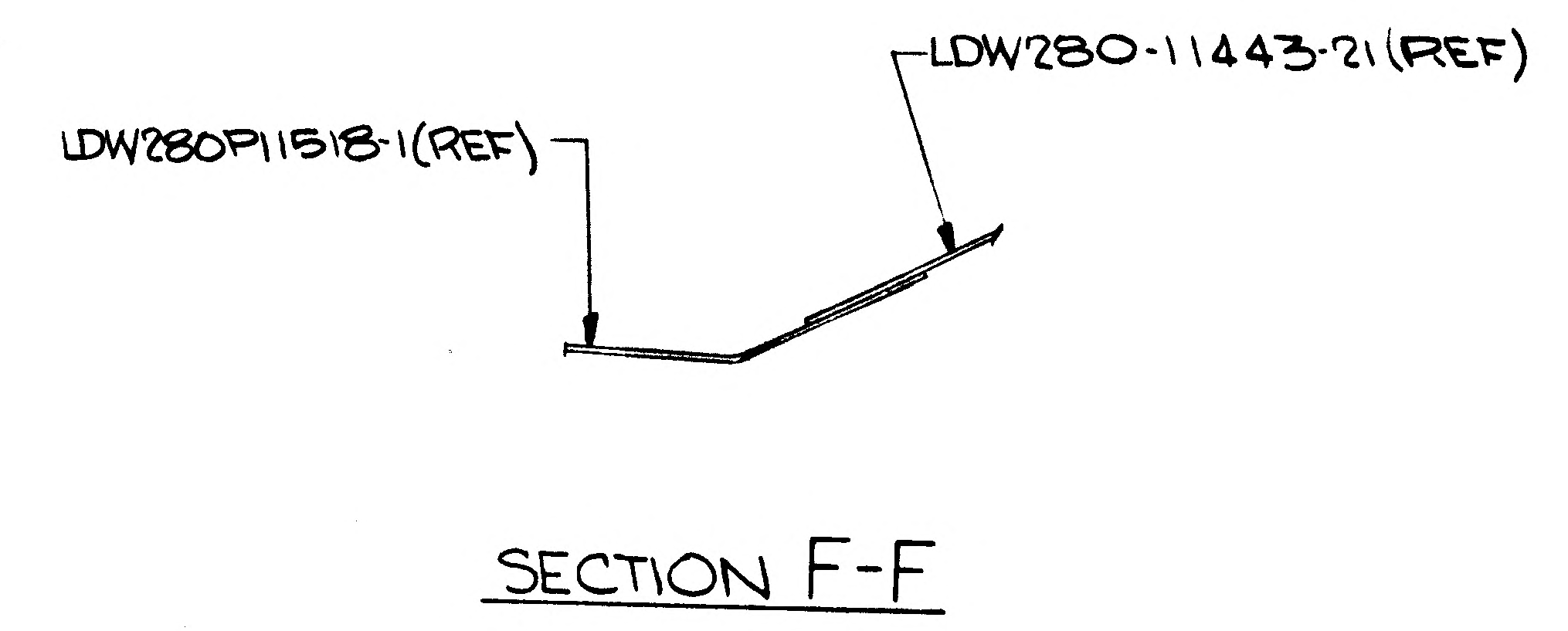
LDW280P11518-1(REF)
LDW280-11443-21(REF)

SECTION F-F

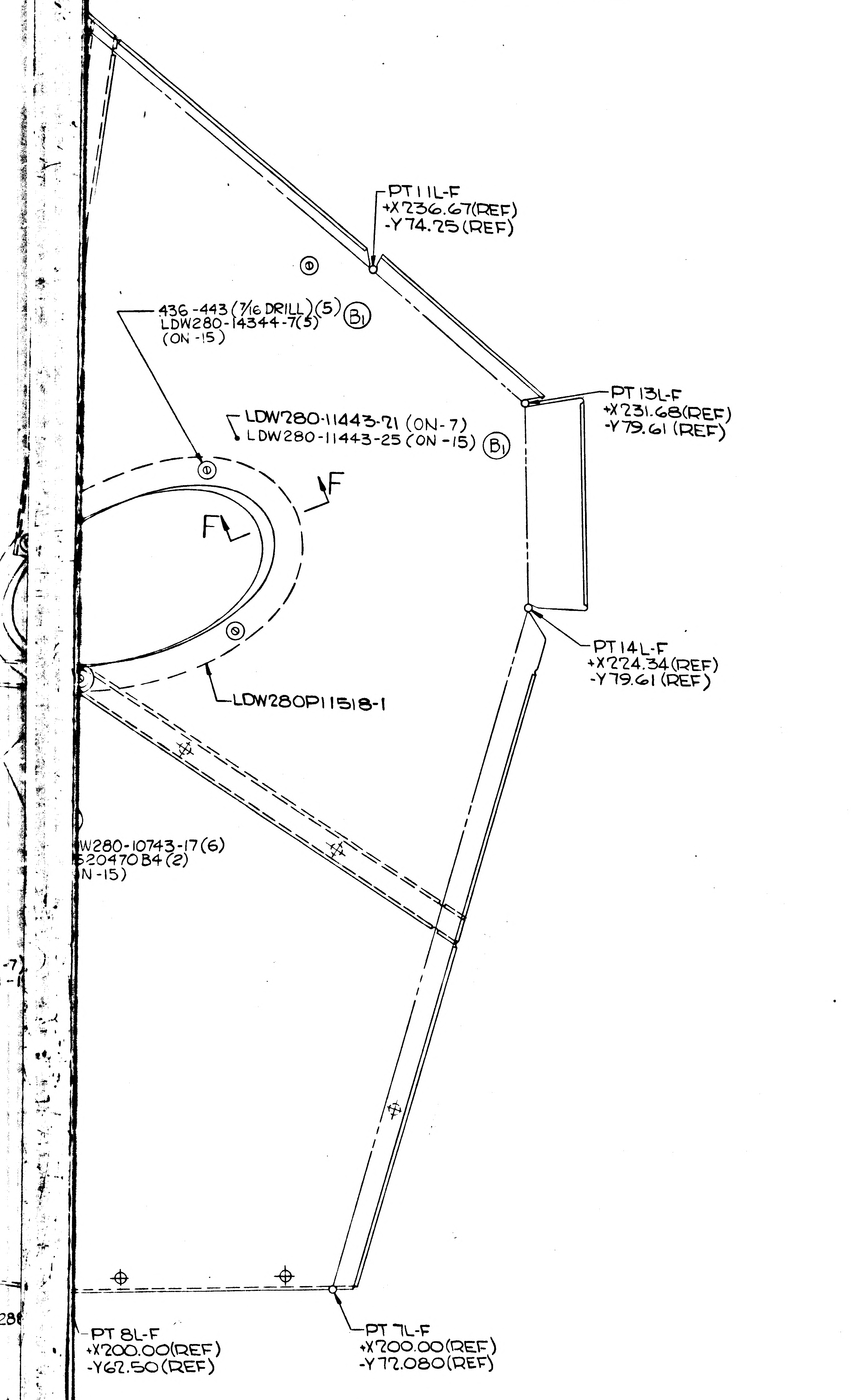
PT 11L-F
+X236.67(REF)
-Y74.25(REF)
436-443 (7/16 DRILL)(5) B1
LDW280-14344-7(5)
(ON -15)
LDW280-11443-21 (ON-7)
LDW280-11443-25 (ON -15) B1
F
F
PT 13L-F
+X231.68(REF)
-Y79.61 (REF)
PT 14L-F
+X224.34(REF)
-Y79.61 (REF)
LDW280P11518-1
W280-10743-17(6)
520470B4(2)
N-15)
PT 8L-F
+X200.00(REF)
-Y62.50(REF)
PT 7L-F
+X200.00(REF)
-Y72.080(REF)

04/04 NAS 9-1100

MANUFACTURING OPERATIONS
UNLESS OTHERWISE SPECIFIED
NOTES CHECKED ✓ APPLY TO THIS DWG.

PART NUMBER
AND ALL OTHER MARKINGS
IN REGION MARKED ⊠
USE BOTH SIDES IF NECESSARY.

FILLET AND INSIDE CORNER
RADII TOLERANCES
.016R TO .062R ± .010
.063R TO .250R ± .015
OVER .250R ± .030

DEPTH SHOWN FOR TAPPED HOLES IS FULL THDS. 2-3 IMP THDS. BEYOND PERMISSIBLE.

EXTERNAL THREAD LENGTH SHOWN INCLUDES 2 IMPERFECT THREADS MAX.

DO NOT CADMIUM PLATE & PAINT HOLES OR SURFACES MARKED WITH DOUBLE ASTERISK.

MISMATCH STEP OF ± .005 PERMISSIBLE DUE TO CHANGE OF CUTTERS AT INSIDE INTERSECTING SURFACES.

DIAMETERS MARKED MUST BE CONCENTRIC WITHIN FULL INDICATOR READING

HOLES MUST BE KEPT FREE OF CHROME PLATING SOLUTION.

ALL DIMENSIONS SHOWN TO BE MET AFTER CADMIUM PLATING. THICKNESS OF PLATE .0003 MIN. TO .0005 MAX. MIN. THICKNESS TO BE .0002 ON THREADED AREAS. NO ALLOWANCE FOR PLATING IN HOLES

125▽ SURFACE ROUGHNESS INCLUDING REAMED HOLES PER MIL-STD-10

200▽ FOR ALL DRILLED HOLES

REMOVE ALL BURRS. BREAK ALL EDGES .015-.031

INSPECTION INFORMATION MINIMUM PERMISSIBLE AVERAGE EDGE DISTANCE MARKED IS

SYMBOL ✓ DENOTES SURFACE TO BE MACHINED

UNLESS OTHERWISE SPECIFIED TOLERANCE ON FLANGES IS ± 1/32

LENGTHS OF AN, NAS & MS AL ALY RIVETS SHORTER THAN 1 INCH ARE NOT SPECIFIED.

TOLERANCE ON LOFTED DELINEATIONS IS

DWG SIZE 40 X

PRINTING INFO ONLY
FULL SIZE SHEET AREA (36 X) = SQ. FT.
1/2 SIZE SHEET AREA (1/4 OF FULL) = SQ. FT.

PRINT TRIM LINE

LDW280-51851 B

LDW280-51851 B

CODE IDENT NO 26512	SH
LDW280-51851	4

GRUMMAN AIRCRAFT ENGRG CORP., BETHPAGE, L. I., NEW YORK			
SIZE K	CODE IDENT NO. 26512	LDW280-51851	B
SCALE 1/2 & NOTED			SHEET 4.00

MODEL OR END ITEM

ENG 32.2 REV 3-65

GRUMMAN AIRCRAFT ENGINEERING CORP.
CODE IDENT NO. 26512
ENGINEERING ORDER *

DWG. NO.	LDW280-51851
EO NO.	A1
CONTROL INFO NO.	LDW280A-2145

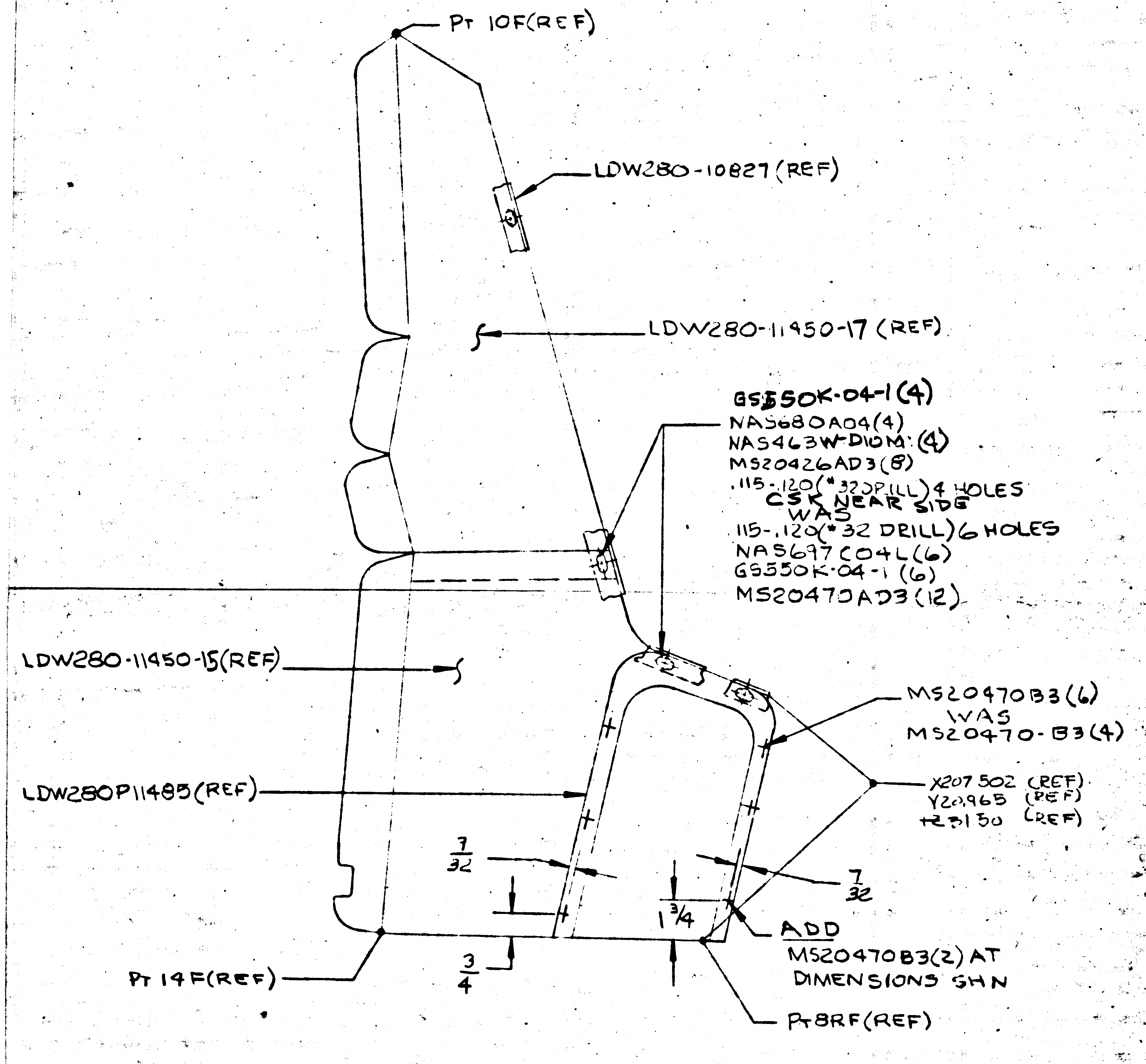

Pt 10F(REF)
LDW280-10827 (REF)
LDW280-11450-17 (REF)
GS550K-04-1(4)
NAS680A04(4)
NAS463W-D10M (4)
MS20426AD3(8)
.115-.120(#32DRILL)4 HOLES
CSK NEAR SIDE
WAS
.115-.120(#32 DRILL)6 HOLES
NAS697C04L(6)
GS550K-04-1 (6)
MS20470AD3 (12)
LDW280-11450-15(REF)
MS20470B3(6)
WAS
MS20470-B3(4)
X207.502 (REF)
Y20.965 (REF)
+Z31.50 (REF)
LDW280P11485(REF)
7/32
7/32
1 3/4
3/4
ADD
MS20470B3(2) AT
DIMENSIONS SHN
Pt 14F(REF)
Pt 8RF(REF)

LDW280-51 851-3 INSTL

(3)

DETAIL SPEC REQ		CL II ENGRG CHG	✓	CL I ENGRG CHG	

REASON FOR EO: TO PROVIDE SKIN GAP FOR VENTING

DESCRIPTION OF EO: DN-3 INSTL ADDED MS20470B3(2) WAS MS20470-B3(4), GS550K-04-1(4), NAS680A04(4), NAS463W-D10M(4), MS20426AD3(8), .115-.120(#32 DRILL) 4 HOLES, CSK NS WAS .115-.120(#32 DRILL) 6 HOLES, NAS697C04L(6), GS550K-04-1(6), MS20470AD3(12)

GAEC EO RELEASE: 10/27

MODEL	PROCURING ACTIVITY NO.	GAEC UNIT NO.	SUB CONTR UNIT NO.
LM		LM-1 (31)	
LM		LM-2 (32)	

DRAWING CHANGE REQ'D: REVISE DWG ✓ RECORD EO
DISPOSITION OF PARTS: REWORK ✓ SCRAP

APPROVED BY								
DATE	10/15/66	10/17/66			10/17		10/17/66	
	VD1	THERM	RELIAB. GROUP	GROUP LEADER	STRESS GROUP	LIAISON ENGRG	PROJ ENGRG	

PRIORITY: C

DRAWING TITLE: SHIELD INSTL A/S N/S TANK FWD & AFT BULKHEAD

DRAWING NO: LDW280-51851

EO NO.: A1

ISSUED BY M. SHAPIRO X1153 SECTION VD1 GROUP NO. 335 PL 35

01 NAS 9-1100

ENG 32.2 REV 3-65

GRUMMAN AIRCRAFT ENGINEERING CORP.
CODE IDENT NO. 26512
ENGINEERING ORDER

DWG. NO.	LDW280-51851	EO NO.	A2
CONTROL INFO NO.	LDW280A-2832		

IN F/D

ON-5 INSTL - VIEW LKG AFT L.H. SIDE SHOULD BE VIEW LKG FWD L.H. SIDE
ON-7 INSTL - VIEW LKG FWD L.H. SIDE SHOULD BE VIEW LKG AFT L.H. SIDE

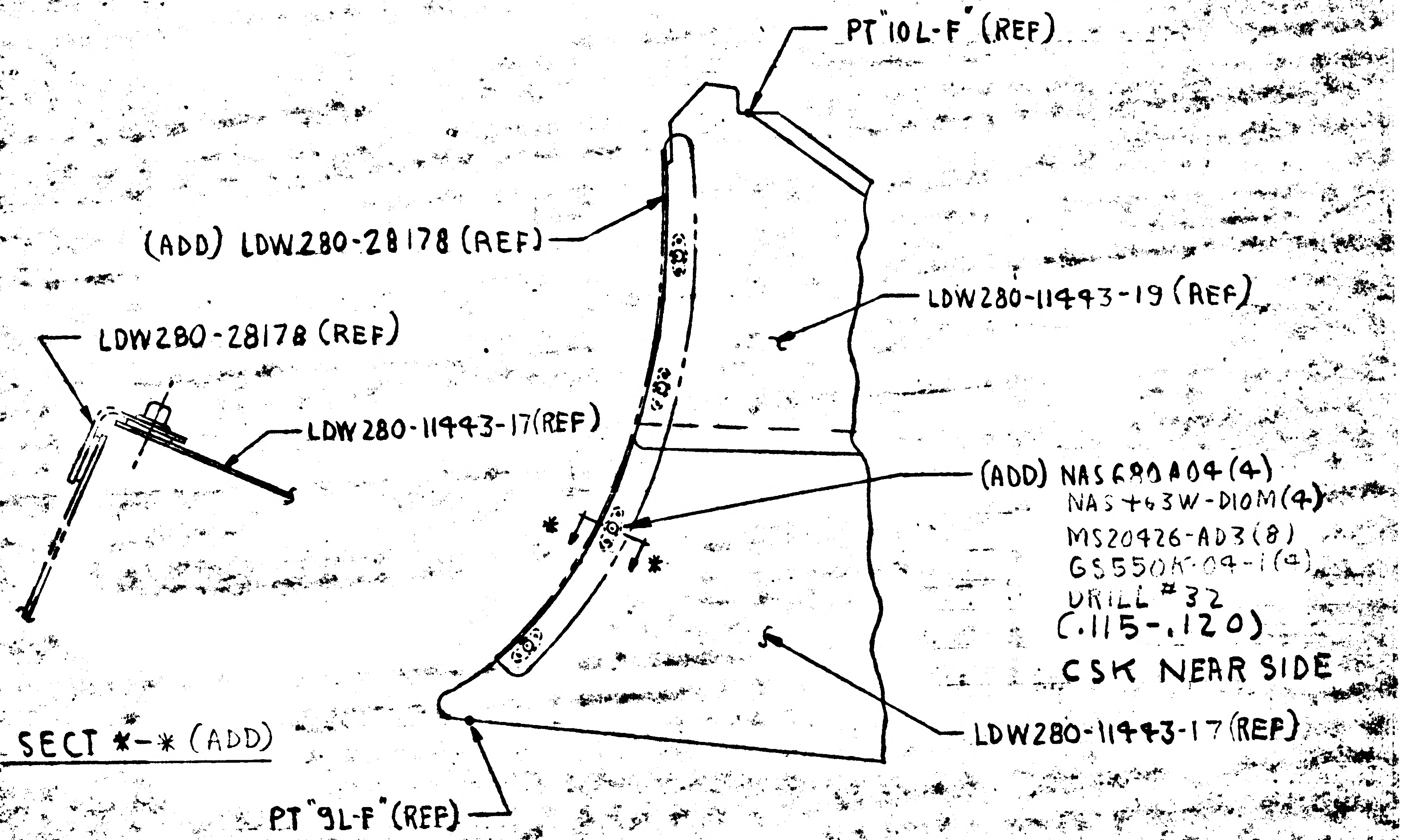
PT "10L-F" (REF)
(ADD) LDW280-28178 (REF)
LDW280-11443-19 (REF)
LDW280-28178 (REF)
LDW280-11443-17 (REF)
(ADD) NAS680A04 (4)
NAS463W-D10M (4)
MS20426-AD3 (8)
GS550K-04-1 (4)
DRILL #32
(.115-.120)
CSK NEAR SIDE
LDW280-11443-17 (REF)
SECT *-* (ADD)
PT "9L-F" (REF)
*
*

LDW280-51851 -7 INSTL

DESCRIPTION OF E.O. CONT.

ADD SECTION *-*, ON-5 VIEW LKG FWD LH SIDE WAS VIEW LKG AFT LH. SIDE & ON-7 VIEW LKG AFT L.H. SIDE WAS VIEW LKG FWD L.H. SIDE.

* USE NEXT AVAILABLE LETTER

3

DETAIL SPEC REQ	CL II ENGRG CHG	CL I ENGRG CHG

REASON FOR EO	DESCRIPTION OF EO	GAEC C EO RELEASE
TO PROVIDE SKIN GAPS FOR VENTING & UPDATE DWG	ON-7 INSTL ADD LDW280-28178 (REF), NAS680A04 (4), NAS463W-D10M (4), MS20426-AD3 (8), GS550K-04-1 (4), DRILL #32 (.115-.120), CSK NS (DESCRIPTION OF EO CONT. ABOVE)	Ⓡ 11

MODEL	PROCURING ACTIVITY NO.	GAEC UNIT NO.	SUB CONTR UNIT NO.
LM		LM-1 (31)	
LM		LM-2 (32)	

DRAWING CHANGE REQD		DISPOSITION OF PARTS		APPROVED BY				HE 10/28				
✓		✓		DATE	10/28/66	10/31			10/31		10-31-66	11/1/66
REVISE DWG	RECORD EO	REWORK	SCRAP	5	VDI	THERM	RELIAB. GROUP	GROUP LEADER	STRESS GROUP	LIAISON ENGRG	PROJ ENGRG	GOVT

PRIORITY	DRAWING TITLE	DRAWING	EO NO.
C	PANEL INSTALLATION AIS-M/S-FWD & AFT TANK BLKHD	LDW280-51851	A2

ISSUED BY E. MILLER X1441 SECTION VD1 GROUP NO. 335 PL. 35

01
NAS 9-1100

ENG 32.2 REV 3-65

GRUMMAN AIRCRAFT ENGINEERING CORP.
CODE IDENT NO. 26512
ENGINEERING ORDER

DWG. NO.	LDW280-51851	EO NO.	A3
CONTROL INFO NO.	LDW280A-2947		

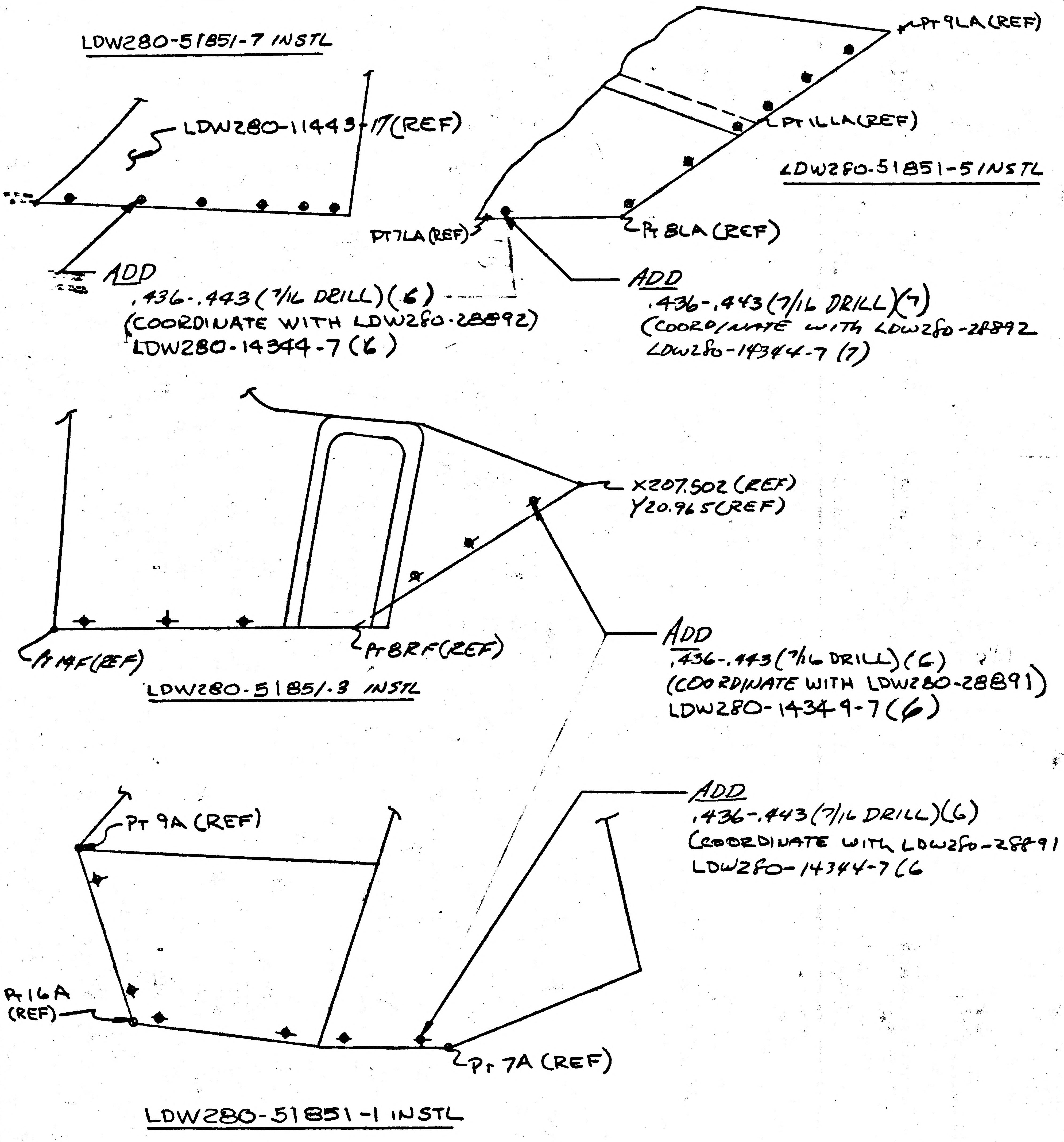
LDW280-51851-7 INSTL
LDW280-11443-17(REF)
ADD
.436-.443 (7/16 DRILL) (6)
(COORDINATE WITH LDW280-28892)
LDW280-14344-7 (6)
PT 9LA (REF)
PT 11LA (REF)
LDW280-51851-5 INSTL
PT 7LA (REF)
PT 8LA (REF)
ADD
.436-.443 (7/16 DRILL) (7)
(COORDINATE WITH LDW280-28892
LDW280-14344-7 (7)
X207.502 (REF)
Y20.965 (REF)
PT 14F (REF)
PT 8RF (REF)
LDW280-51851-3 INSTL
ADD
.436-.443 (7/16 DRILL) (6)
(COORDINATE WITH LDW280-28891)
LDW280-14349-7 (6)
ADD
.436-.443 (7/16 DRILL) (6)
(COORDINATE WITH LDW280-28891
LDW280-14344-7 (6
PT 9A (REF)
PT 16A (REF)
PT 7A (REF)
LDW280-51851-1 INSTL

IN F/D: ADD DRILL NOTE AS SHN ABOVE & PICTURE
IN M/B: ADD LDW280-14344-7 SCREW ASSY (25 REQ'D)

3

DETAIL SPEC REQ	☐	CL II ENGRG CHG	☑	CL I ENGRG CHG	☐

REASON FOR EO: TO COORDINATE STANDOFF INSTALLATION

DESCRIPTION OF EO: IN F/D: FOR -51-7, ADDED .436-.443 (7/16 DRILL) (13) TO BE COORDINATED WITH LDW280-28892. FOR -51-3, ADDED .436-.443 (7/16 DRILL) (12) TO BE COORDINATED WITH LDW280-28891 ADDED: LDW280-14344-7 (25)

GAEC EO RELEASE: VE 11/3

MODEL	PROCURING ACTIVITY NO.	GAEC UNIT NO.	SUB CONTR UNIT NO.
LM		LM-1 (31)	
LM		LM-2 (32)	

DRAWING CHANGE REQD: REVISE DWG	RECORD EO	DISPOSITION OF PARTS: REWORK	SCRAP
✓		✓	

APPROVED BY	JAP	V.G.G.		HENTON 11/2			RMC	RY
DATE	11/2/66	11/2			11/1		11-2	11/3/66
5	VD1	THERM	RELIAB. GROUP	GROUP LEADER	STRESS GROUP	LIAISON ENGRG	PROJ ENGRG	GOVT

PRIORITY	DRAWING TITLE	DRAWING NO.	EO NO.
C	PANEL INSTL A/S M/S FWD & AFT TANK BULKHEAD	LDW280-51851	A3

ISSUED BY SHAPIRO/WOOD/GAUTHIER SECTION VD1 GROUP NO. 335 PL 35 ok

ENG 32.1 REV 3-65

GRUMMAN AIRCRAFT ENGINEERING CORP.
CODE IDENT NO. 26512
ENGINEERING ORDER

DWG. NO. LDW280-51851 | EO NO. A4
CONTROL INFO NO. LDW 280A-3754

ON -1 INSTL:
(REMOVE) LDW280-11451-1, -17 & -19
(ADD) LDW280-11451-3, -25 & -27

3

DETAIL SPEC REQ	☐	CL II ENGRG CHG	☑	CL I ENGRG CHG	☐

REASON FOR EO: TO UPDATE DWG TO AGREE WITH DETAIL PARTS.

DESCRIPTION OF EO: ON -1 REMOVED LDW280-11451-1, -17 & -19
ADDED LDW280-11451-3, -25 & -27

GAEC EO RELEASE: FR 12/7/66

MODEL	PROCURING ACTIVITY NO.	GAEC UNIT NO.	SUB CONTR UNIT NO.
LM		LM-1(31)	
LM		LM-2(32)	

DRAWING CHANGE REQD: REVISE DWG	RECORD EO	DISPOSITION OF PARTS: REWORK	SCRAP
✓		-1 ✓	

APPROVED BY		AB			JV			
DATE	11/30/66	12/1/66		11/29	12/7		12/7	12/7/66
	#6	VDI	THERM	RELIAB. GROUP	GROUP LEADER	STRESS GROUP	LIAISON ENGRG	PROJ ENGRG	~~GOVT~~

PRIORITY	DRAWING TITLE	DRAWING NO.	EO NO.
C	PANEL INSTL-A/S-M/S FWD & AFT TANK BHD	LDW280-51851	A4

ISSUED BY E. MILLER x7033 SECTION VDI GROUP NO. 335 PL 35

01 NAS 9-1100

ENG 32 2 REV 3 65 B

GRUMMAN AIRCRAFT ENGINEERING CORP.
CODE IDENT NO. 26512
ENGINEERING ORDER

DWG NO. LEO-280 | EO NO. 497
CONTROL INFO NO LDW 280A-5768

(ADD) NOTE, "*. MATERIAL, FINISHES, HANDLING AND PERMISSIBLE DEVIATIONS PER LPC-280-16", TO THE FOLLOWING DRAWINGS:

DRAWING NUMBER	TITLE	EFFECTIVITY	CHANGE NUMBER
LDW280-11444	SEE DWG.	LTA-8(18)	A9
LDW280-28160			A8
LDW280-28161			B1
LDW280-28163			A5
LDW280-28851			A7
LDW280-28852			A5
LDW280-28861		LTA-8(18)	A5
LDW280-11524		LM-1(31), LM-2(32)	A6
LDW280-51160			A7
LDW280-51161			A8
LDW280-51163			A3
LDW280-51851			A5
LDW280-51852			A6
LDW280-51861		LM-1(31), LM-2(32)	A7
LDW 280-11422		LTA-8(18), LM-1(31), LM-2(32)	A2
LDW280-11423			A2
LDW280-11424			A4
LDW280-11425			B1
LDW280-11426			B5
LDW280-11427			B5
LDW 280-11428			B5
LDW 280-11429			B7
LDW 280-11430			A6
LDW 280-11431			B3
LDW 280-11432	SEE DWG.	LTA-8(18), LM-1(31), LM-2(32)	B3

NOTE:
* = USE NEXT AVAILABLE №.

DETAIL SPEC REQ	✓	CL II ENGRG CHG		CL I ENGRG CHG		3

REASON FOR EO: LPC'S OMITTED ON DWG.

DESCRIPTION OF EO: ADDED NOTE *

GAEC EO RELEASE: C JK 3/8/67

MODEL	PROCURING ACTIVITY NO.	GAEC UNIT NO.	SUB CONTR UNIT NO.
LM		NOTED	

DRAWING CHANGE REQD: REVISE DWG ✓ | RECORD EO

DISPOSITION OF PARTS: REWORK ✓ | SCRAP

		SUPPORT ENGRG	RELIAB. GROUP	GROUP LEADER	STRESS GROUP	LIAISON ENGRG	PROJ ENGRG	GOVT
APPROVED BY	JaP			7.Ndl	98		Dam	JJ
DATE	3/2/67			3/2/67	3/3/67		3/6/67	3/7/67
1	VDI							

PRIORITY: C | DRAWING TITLE: NOTED | DRAWING NO.: LEO-280 | EO NO.: 497

ISSUED BY W. Pailk SECTION VEH. DES. INT. GROUP NO. 335 PI 35

01 NAS 9-1100

B

ENG 32.1 REV 3-65

GRUMMAN AIRCRAFT ENGINEERING CORP.
CODE IDENT NO. 26512
ENGINEERING ORDER *

DWG. NO. LDW280-51851		EO NO. A6
CONTROL INFO NO. LM-5-12794		

ON-5 INSTL.-
IN B/M & F/D LDW280-11524-21 REPLACES LDW280-11524-17

RELEASED BY LIAISON

DETAIL SPEC REQ	☐	CL II ENGRG CHG	☑	CL I ENGRG CHG	☐	5

REASON FOR EO: TO PROVIDE CORRECT DRAIN LINE HOLES IN THERMAL SHIELD

DESCRIPTION OF EO: ON-5 INSTL., IN B/M & F/D LDW280-11524 -21 REPLACES LDW280-11524-17

GAEC EO RELEASE: JK —

MODEL	EFFECTIVITY		
	PROCURING ACTIVITY NO.	GAEC UNIT NO.	SUB CONTR UNIT NO.
LM		LM-1 (31)	
		LM-2 (32)	

DRAWING CHANGE REQD		DISPOSITION OF PARTS	
REVISE DWG	RECORD EO	REWORK	SCRAP
✓		✓	

APPROVED BY					JFJ	CH	RMC	
DATE	1				4-14-67	4-14	4-17-67	4/14/67
		SUPPORT	RELIAB. GROUP	GROUP LEADER	STRESS GROUP	LIAISON ENGRG	PROJ ENGRG	

PRIORITY	DRAWING TITLE	DRAWING NO.	EO NO.
C	SHIELD INSTL.-A/S-M/S TANK FWD & AFT BULKHEAD	LDW280-51851	A6

ISSUED BY LIAISON-J. McGILL X-6226 SECTION VDI GROUP NO.____ PL 25

01 4 NAS 9-1100

1

ENG 32.1 REV 3-65

GRUMMAN AIRCRAFT ENGINEERING CORP.
CODE IDENT NO. 26512
ENGINEERING ORDER

*

DWG. NO. LDW280-51851
EO NO. A7
CONTROL INFO NO. LM5-13193

FROM -3 INSTL:

REMOVE LDW280P11485-11 FAIRING & REPLACE IT WITH LDW280P11485-7 FAIRING ASSY.

RELEASED BY LIAISON

DETAIL SPEC REQ ☐ CL II ENGRG CHG ☑ CL I ENGRG CHG ☐

REASON FOR EO: MORE ADEQUATE PART BEING SUBSTITUTED

DESCRIPTION OF EO: ON -3 INSTL LDW280P11485-7 FAIRING ASSY WAS LDW280P11485-11 FAIRING.

GAEC EO RELEASE: 3 C ✓ 31 05 025

MODEL	PROCURING ACTIVITY NO.	GAEC UNIT NO.	SUB CONTR UNIT NO.
LM		LM-1(31)	
		LM-2(32)	

DRAWING CHANGE REQD: REVISE DWG ✓ RECORD EO
DISPOSITION OF PARTS: REWORK ✓ SCRAP

APPROVED BY	WT ALW				JFJ	CH	RHP	N.C.O
DATE	4/15/67				4-18-67	4-18	4-20-67	4/18/67
1	VDI	SUPPORT	RELIAB. GROUP	GROUP LEADER	STRESS GROUP	LIAISON ENGRG	PROJ ENGRG	GOVT

PRIORITY: C
DRAWING TITLE: SHIELD INSTL-ASCENT-MID SECT-TANK-FWD & AFT BHD
DRAWING NO. LDW280-51851
EO NO. A7

ISSUED BY ART WILSON X6510 SECTION VDI GROUP NO. 335 PL 5

01

NAS 9-1100

B

ENG 32.2 REV 3-65

GRUMMAN AIRCRAFT ENGINEERING CORP.
CODE IDENT NO. 26512
ENGINEERING ORDER *

DWG. NO. LDW280-51851 | EO NO. A 8
CONTROL INFO NO. LDW280A5597

REVISE -3 AS SHOWN:

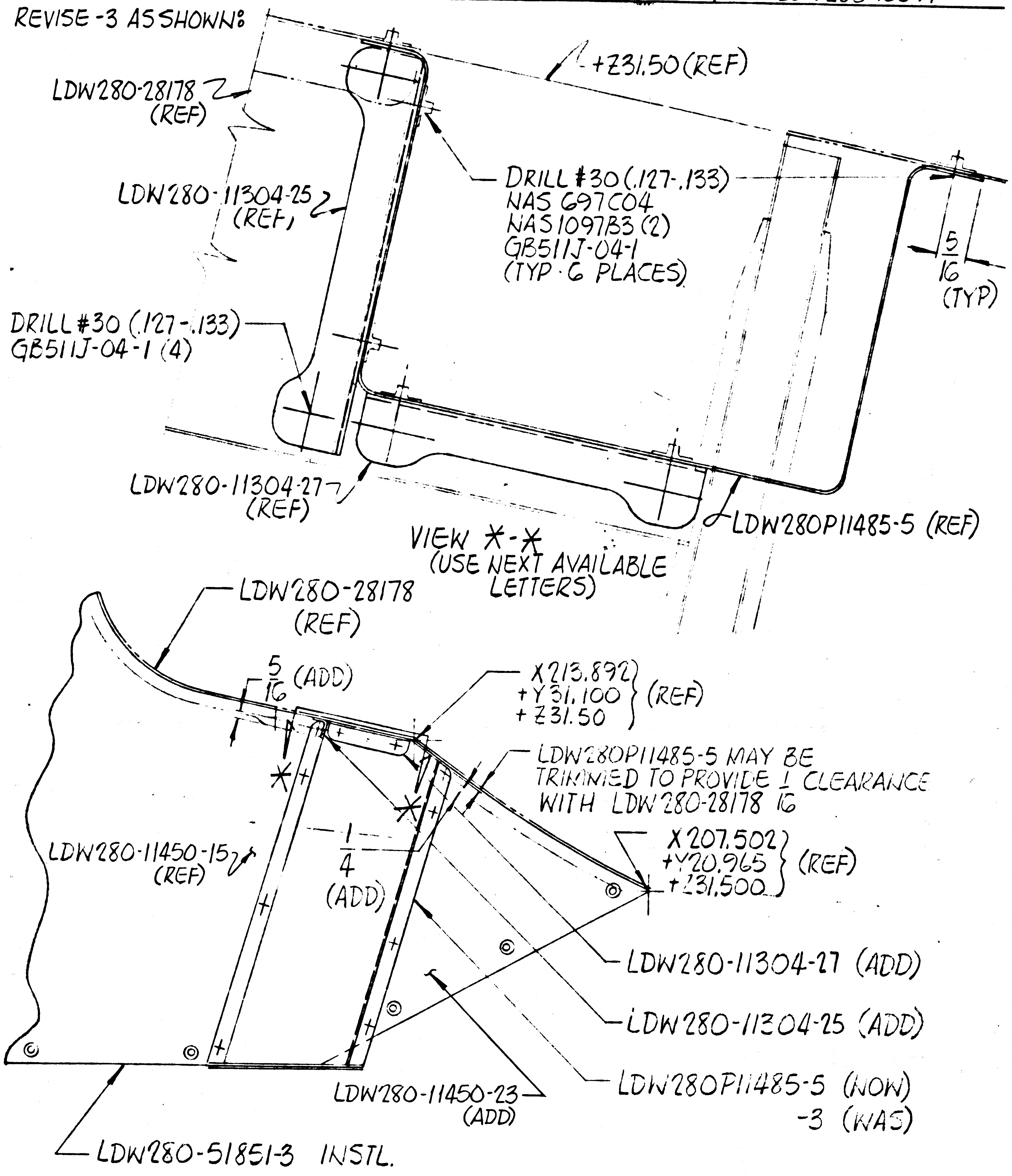

+Z31.50 (REF)
LDW280-28178 (REF)
LDW280-11304-25 (REF)
DRILL #30 (.127-.133) NAS 697C04 NAS1097B3 (2) GB511J-04-1 (TYP 6 PLACES)
5/16 (TYP)
DRILL #30 (.127-.133) GB511J-04-1 (4)
LDW280-11304-27 (REF)
LDW280P11485-5 (REF)
VIEW *-* (USE NEXT AVAILABLE LETTERS)
LDW280-28178 (REF)
5/16 (ADD)
X213.892 +Y31.100 +Z31.50 (REF)
LDW280P11485-5 MAY BE TRIMMED TO PROVIDE 1/16 CLEARANCE WITH LDW280-28178
X207.502 +Y20.965 +Z31.500 (REF)
LDW280-11450-15 (REF)
1/4 (ADD)
LDW280-11304-27 (ADD)
LDW280-11304-25 (ADD)
LDW280P11485-5 (NOW) -3 (WAS)
LDW280-11450-23 (ADD)
LDW280-51851-3 INSTL.

DETAIL SPEC REQ		CL II ENGRG CHG		CL I ENGRG CHG	✓	LCD 1069 CCA553	3

REASON FOR EO: TO ACCOMMODATE REVISION OF CIRCUIT INTERRUPTERS

DESCRIPTION OF EO: ON -3 INSTL. REMOVED LDW280P11485-3. ADDED LDW280P11485-5, LDW280-11304-25 & -27, NAS697C04 (6), GB511J-04-1 (10), NAS1097B3 (12), & LDW280-11450-23. ADDED VIEW *-*.

GAEC EO RELEASE: JK 5/11/7

MODEL	PROCURING ACTIVITY NO.	GAEC UNIT NO.	SUB CONTR UNIT NO.
LM	LM1 (31) &	LM2 (32)	

DRAWING CHANGE REQD: REVISE DWG	RECORD EO	DISPOSITION OF PARTS: REWORK	SCRAP
✓		✓	

		SUPPORT	RELIAB. GROUP	GROUP LEADER	STRESS GROUP	LIAISON ENGRG	PROJ ENGRG	
APPROVED BY	Jaf				JV		Dam	
DATE	5/9/67				5/11/67		5/16/67	5/17/67
2	VDI							

PRIORITY: C

DRAWING TITLE: PANEL INSTL. A/S, M/S FWD & AFT BULKHEAD

DRAWING NO.: LDW280-51851

EO NO.: A 8

ISSUED BY M. SALVADOR X7033 SECTION VDI GROUP NO. 335 PL 25

01 / NAS 9-1100

B

ENG 32.1 REV 3-65

GRUMMAN AIRCRAFT ENGINEERING CORP.
CODE IDENT NO. 26512
ENGINEERING ORDER

DWG NO. LDW280-51851
EO NO. A9
CONTROL INFO NO. LM-3-5147

THIS IS A REVISION OF E.O.#A8

IN FLD & B/M (FOR -3)
(REMOVE) LDW280P11485-11
(ADD) LDW280P11485-5 FAIRING ASSY.

WAS

(REMOVE) LDW280P11485-3
(ADD) LDW280P11485-5

DETAIL SPEC REQ ☐ CL II ENGRG CHG ☐ CL I ENGRG CHG ☑ LCD 1069 CCA553 3

REASON FOR EO: FLD & B/M DONT AGREE WITH DET. ASSY.

DESCRIPTION OF EO: REF. E.O. A8 IN -3, REMOVED LDW280P11485-11 WAS REMOVED LDW280P11485-3.

GAEC EO RELEASE C JK

MODEL	PROCURING ACTIVITY NO.	GAEC UNIT NO.	SUB CONTR UNIT NO.
LM		LM-1 (31) LM-2 (32)	

DRAWING CHANGE REQD: REVISE DWG ✓ RECORD EO
DISPOSITION OF PARTS: REWORK ✓ SCRAP

APPROVED BY				—	BM		DAM	
DATE	7/5/67			—	5-25-67	5-26-67	5-31-67	6/2/67
2	VDI	SUPPORT	RELIAB. GROUP	GROUP LEADER	STRESS GROUP	LIAISON ENGRG	PROJ ENGRG	

PRIORITY C3
DRAWING TITLE PANEL INSTL. A/S, M/S FWD & AFT BULKHEAD
DRAWING NO. LDW280-51851
EO NO. A9

ISSUED BY LIAISON/ALEC HARVEY (X2151) 5-25-67 SECTION V.D.I. GROUP NO. 335 PL 25

01 NAS 9-1100

B

ENG 32.1 REV 3-65

GRUMMAN AIRCRAFT ENGINEERING CORP.
CODE IDENT NO. 26512
ENGINEERING ORDER

*

DWG NO. LDW280-51851 EO NO. A10
CONTROL INFO NO. LM-3-5142

CANCEL E.O. #A7

DETAIL SPEC REQ	☐	CL II ENGRG CHG	☑	CL I ENGRG CHG	☐	3

REASON FOR EO: REDESIGNED PART NOT REQD.

DESCRIPTION OF EO: CANCELED E.O. #A7

GAEC EO RELEASE: C JK

MODEL	EFFECTIVITY: PROCURING ACTIVITY NO.	EFFECTIVITY: GAEC UNIT NO.	EFFECTIVITY: SUB CONTR UNIT NO.
LM		LM-1(31)	
		LM-2(32)	

DRAWING CHANGE REQD: REVISE DWG	RECORD EO	DISPOSITION OF PARTS: REWORK	SCRAP
✓		✓	

			SUPPORT	RELIAB. GROUP	GROUP LEADER	STRESS GROUP	LIAISON ENGRG	PROJ ENGRG	GOVT
APPROVED BY					—	BM		DAM	
DATE	7/5/67				—	5-25-67	5-26-67	5-31-67	
	1	UDI							

PRIORITY: C3
DRAWING TITLE: PANEL INSTL, A/S, M/S FWD & AFT BULKHEAD
DRAWING NO. LDW280-51851
EO NO. A10

ISSUED BY LIAISON/ALEC HARVEY(X2151)52567 SECTION V.D.I. GROUP NO. 335 PL 25

01 NAS 9-1100

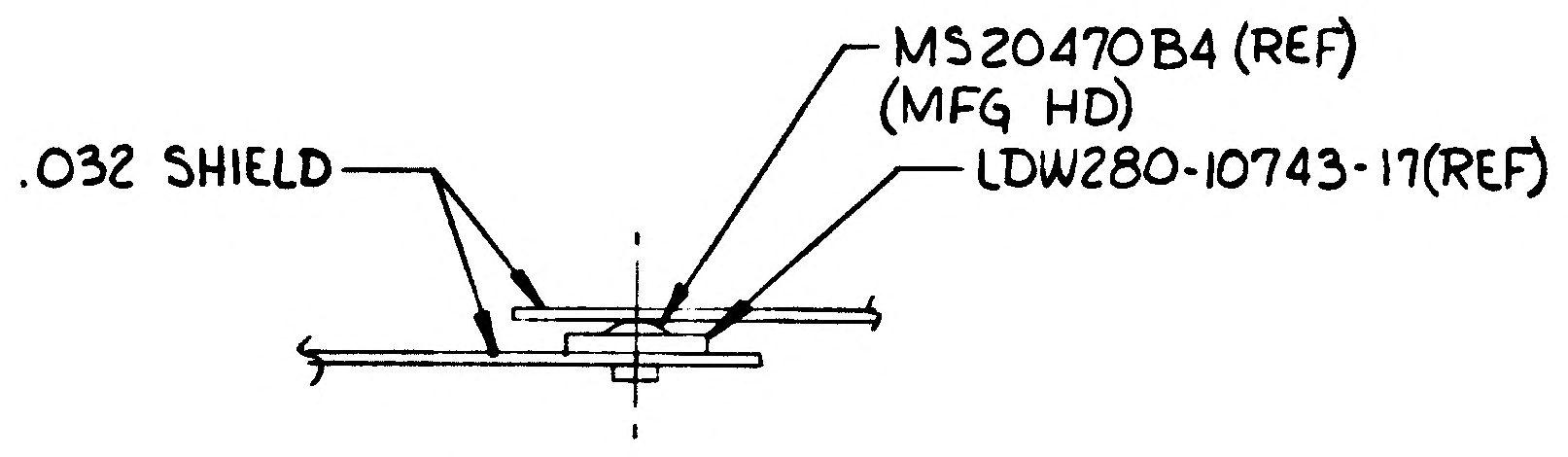
.032 SHIELD
MS20470B4 (REF)
(MFG HD)
LDW280-10743-17(REF)

(ADD) SECT Δ-Δ

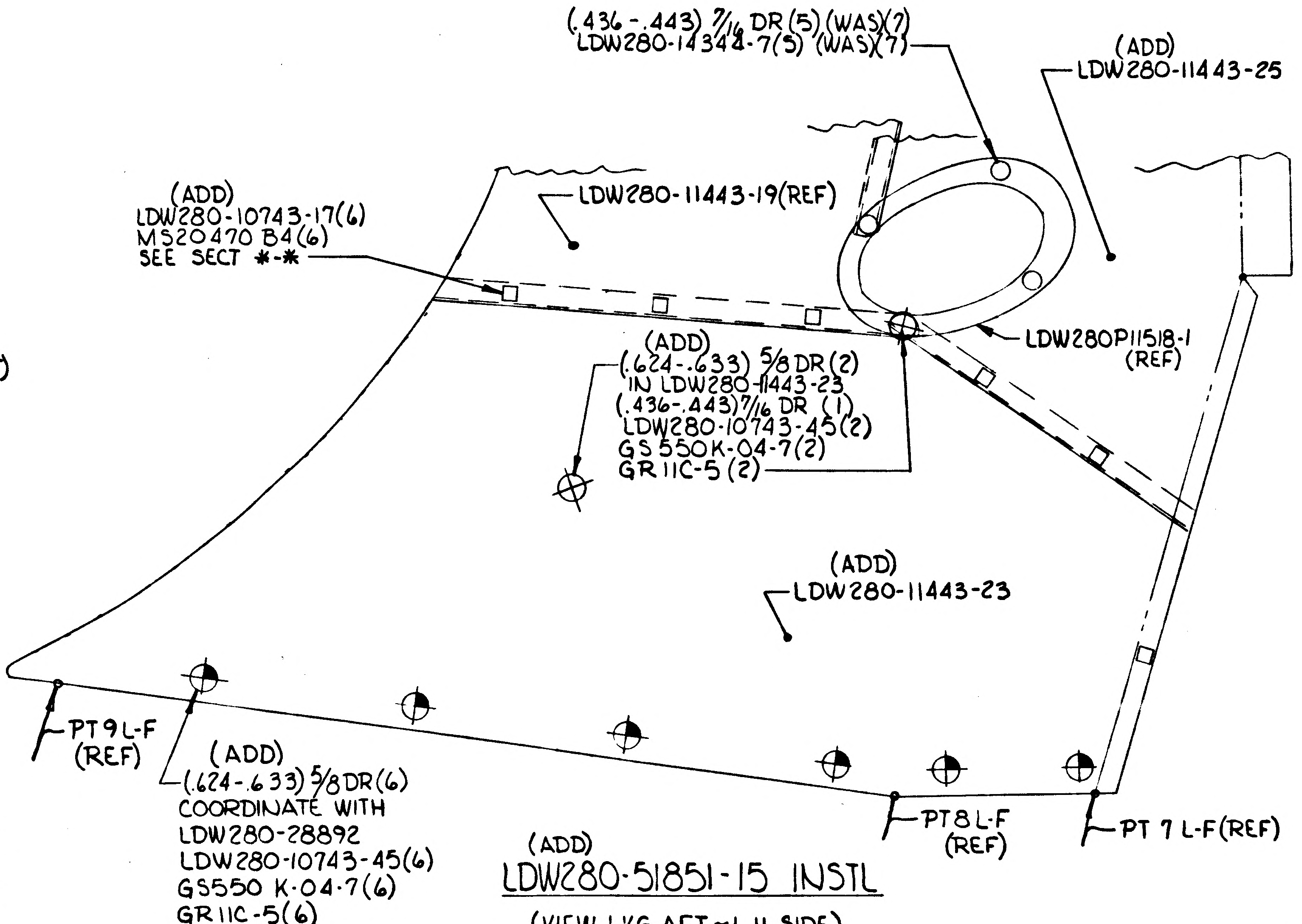
(.436-.443) 7/16 DR (5) (WAS)(7)
LDW280-14344-7(5) (WAS)(7)
(ADD)
LDW280-11443-25
(ADD)
LDW280-10743-17(6)
MS20470 B4(6)
SEE SECT *-*
LDW280-11443-19(REF)
LDW280P11518-1
(REF)
(ADD)
(.624-.633) 5/8 DR (2)
IN LDW280-11443-23
(.436-.443) 7/16 DR (1)
LDW280-10743-45(2)
GS550K-04-7(2)
GR11C-5(2)
(ADD)
LDW280-11443-23
PT 9 L-F
(REF)
(ADD)
(.624-.633) 5/8 DR(6)
COORDINATE WITH
LDW280-28892
LDW280-10743-45(6)
GS550 K-04-7(6)
GR11C-5(6)
(WAS)
(.436-.443) 7/16 DR(6)
COORDINATE WITH
LDW280-28892
LDW280-14344-7(6)
PT 8 L-F
(REF)
PT 7 L-F(REF)

(ADD)
LDW280-51851-15 INSTL
(VIEW LKG AFT~L.H. SIDE)

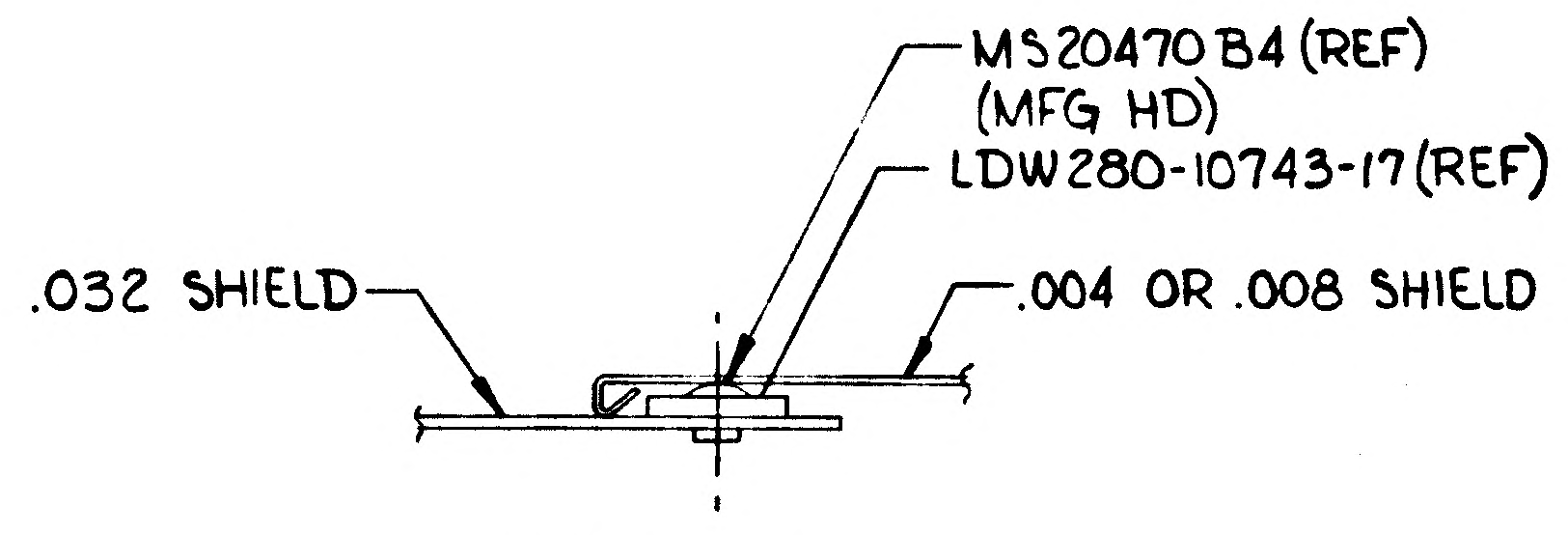
MS20470 B4 (REF)
(MFG HD)
LDW280-10743-17(REF)
.032 SHIELD
.004 OR .008 SHIELD

(ADD) SECT *-*

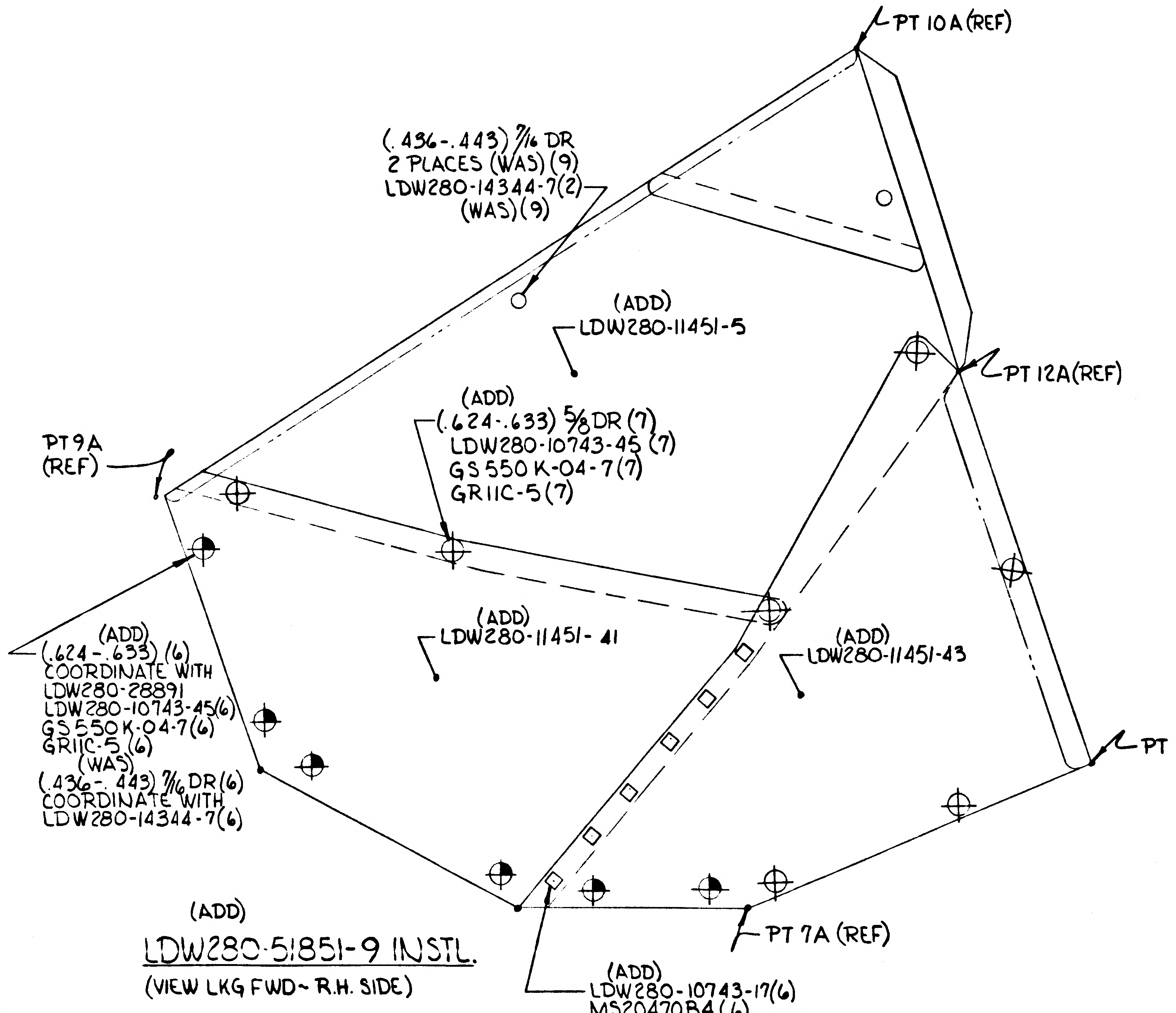
PT 10A (REF)
(.436-.443) 7/16 DR
2 PLACES (WAS) (9)
LDW280-14344-7(2)
(WAS) (9)
(ADD)
LDW280-11451-5
PT 12A (REF)
(ADD)
(.624-.633) 5/8 DR (7)
LDW280-10743-45 (7)
GS550K-04-7(7)
GR11C-5(7)
PT9A
(REF)
(ADD)
LDW280-11451-41
(ADD)
LDW280-11451-43
(ADD)
(.624-.633) (6)
COORDINATE WITH
LDW280-28891
LDW280-10743-45(6)
GS550K-04-7(6)
GR11C-5 (6)
(WAS)
(.436-.443) 7/16 DR(6)
COORDINATE WITH
LDW280-14344-7(6)
PT 14A (REF)
PT 7A (REF)
(ADD)
LDW280-10743-17(6)
MS20470 B4 (6)
SEE SECT Δ-Δ

(ADD)
LDW280-51851-9 INSTL.
(VIEW LKG FWD~R.H. SIDE)

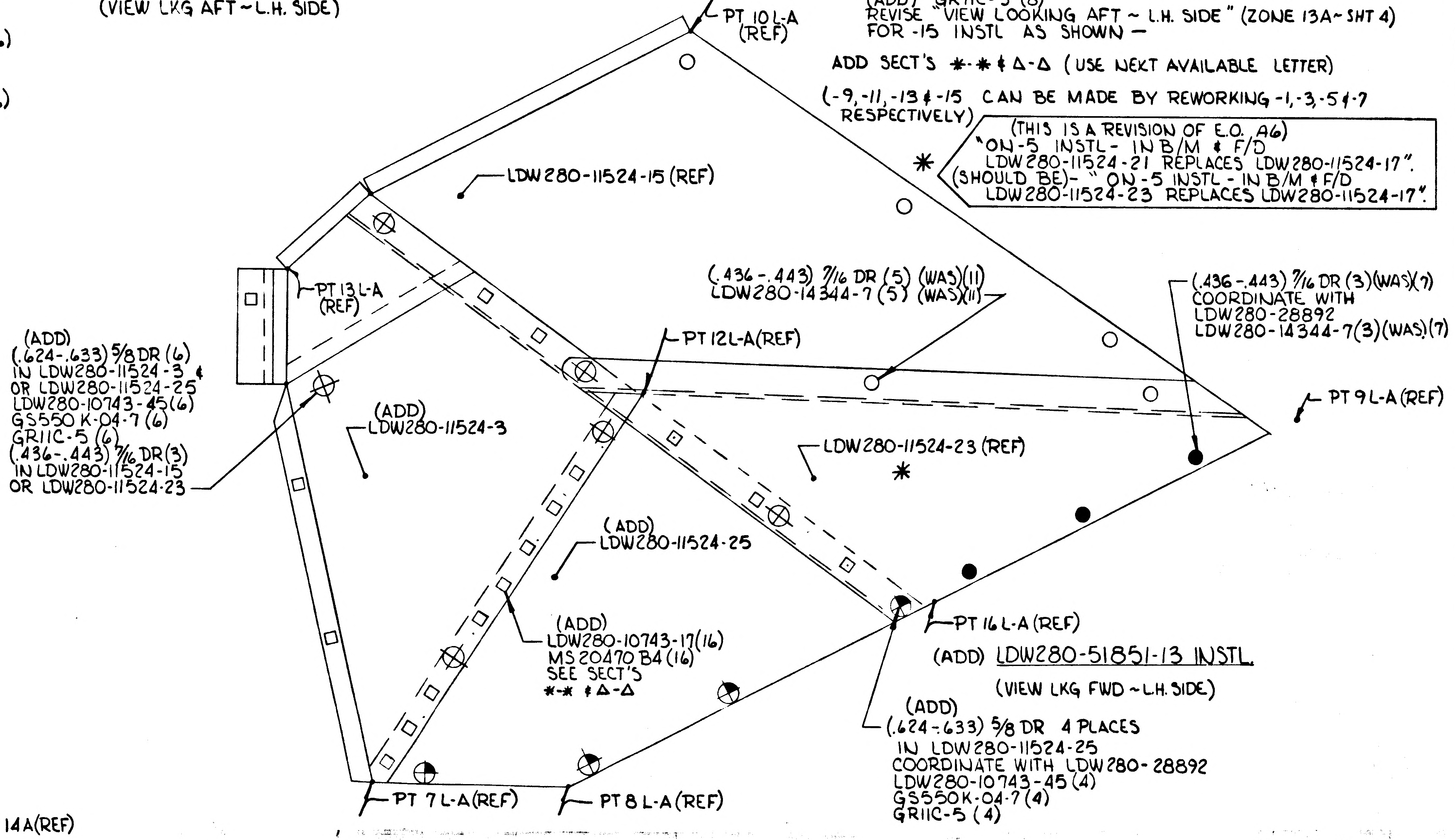
PT 10 L-A
(REF)
LDW280-11524-15 (REF)
PT 13 L-A
(REF)
(.436-.443) 7/16 DR (5) (WAS)(11)
LDW280-14344-7 (5) (WAS)(11)
(.436-.443) 7/16 DR (3)(WAS)(7)
COORDINATE WITH
LDW280-28892
LDW280-14344-7(3)(WAS)(7)
PT 12 L-A (REF)
PT 9 L-A (REF)
(ADD)
(.624-.633) 5/8 DR (6)
IN LDW280-11524-3 &
OR LDW280-11524-25
LDW280-10743-45(6)
GS550 K-04-7 (6)
GR11C-5 (6)
(.436-.443) 7/16 DR(3)
IN LDW280-11524-15
OR LDW280-11524-23
(ADD)
LDW280-11524-3
LDW280-11524-23 (REF)
*
(ADD)
LDW280-11524-25
(ADD)
LDW280-10743-17(16)
MS20470 B4 (16)
SEE SECT'S
- & Δ-Δ
PT 16 L-A (REF)
PT 7 L-A (REF)
PT 8 L-A (REF)
(ADD)
(.624-.633) 5/8 DR 4 PLACES
IN LDW280-11524-25
COORDINATE WITH LDW280-28892
LDW280-10743-45 (4)
GS550K-04-7 (4)
GR11C-5 (4)

(ADD) LDW280-51851-13 INSTL.
(VIEW LKG FWD~L.H. SIDE)

IN M/B FOR -1, -3, -5 & -7 REMOVE LM-1 EFFECTIVITY ~
CREATE -9, -11, -13 & -15 SHIELD INSTL'S EFF: LM-1 (31) ONLY
N/A LDW280-51150 ~ 1 EACH REQ'D/MODULE

-9 IS IDENTICAL TO -1 EXCEPT ~
LDW280-11451-5 REPLACES LDW280-11451-3
LDW280-11451-41 " LDW280-11451-25
LDW280-11451-43 " LDW280-11451-27
LDW280-10743-45 (13) & GS550K-04-7 (13)
REPLACE LDW280-14344-7(13)
(ADD) LDW280-10743-17 (6)
(ADD) MS20470 B4 (6)
(ADD) GR11C-5 (13)
REVISE "VIEW LOOKING FWD~R.H. SIDE" (ZONE 8A-SHT 3)
FOR -9 INSTL. AS SHOWN —

-11 IS IDENTICAL TO -3 EXCEPT ~
LDW280-11450-25 REPLACES LDW280-11450-15
LDW280-11450-27 REPLACES LDW280-11450-23

(NO PICTURE CHANGE)

-13 IS IDENTICAL TO -5 EXCEPT ~
LDW280-11524-3 REPLACES LDW280-11524-1
LDW280-11524-25 REPLACES LDW280-11524-13
LDW280-10743-45(10) & GS550 K-04-7 (10)
REPLACE LDW280-14344-7(10)
(ADD) LDW280-10743-17(16)
(ADD) MS20470 B4 (16)
(ADD) GR11C-5 (10)
REVISE "VIEW LOOKING FWD~L.H. SIDE" (ZONE 18A~SHT 4)
FOR -13 INSTL AS SHOWN—

-15 IS IDENTICAL TO -7 EXCEPT ~
LDW280-11443-23 REPLACES LDW280-11443-17
LDW280-11443-25 REPLACES LDW280-11443-21
LDW280-10743-45 (8) & GS550K-04-7(8)
REPLACE LDW280-14344-7(8)
(ADD) LDW280-10743-17(6)
(ADD) MS20470 B4 (6)
(ADD) GR11C-5 (8)
REVISE "VIEW LOOKING AFT ~ L.H. SIDE" (ZONE 13A~SHT 4)
FOR -15 INSTL AS SHOWN —

ADD SECT'S *-* & Δ-Δ (USE NEXT AVAILABLE LETTER)

(-9, -11, -13 & -15 CAN BE MADE BY REWORKING -1, -3, -5 & -7 RESPECTIVELY)

* (THIS IS A REVISION OF E.O. A6)
"ON-5 INSTL- IN B/M & F/D
LDW280-11524-21 REPLACES LDW280-11524-17".
(SHOULD BE)- "ON-5 INSTL - IN B/M & F/D
LDW280-11524-23 REPLACES LDW280-11524-17".

PRINTING INFO ONLY
FULL SIZE SHEET AREA (30×40) 8.3 SQ.FT.
1/2 SIZE SHEET AREA 2.1 SQ.FT.

DETAIL SPEC REQD		CLASS II ENGRG CHG		CLASS I ENGRG CHG	✓	LCD 1847							CONTROL INFO NO. LDW280A 8115	
REASON FOR EO PLUME HEATING PROTECTION				DESCRIPTION OF EO REMOVED LM-1 EFF FROM -1, -3, -5 & -7 & CREATED -9, -11, -13 & -15 INSTL'S ~ REVISED EO A6 (LDW280-11524-23 WAS -21) ADDED SECT'S *-* & Δ-Δ									Ⓡ GRUMMAN EO RELEASE JK 7/1/7	C
MODEL	EFFECTIVITY PROCURING ACT. NO.	EFFECTIVITY GAEC UNIT NO.	SUB CONTR UNIT NO.	DRAWING REVISION REQD		DISPOSITION OF PARTS		BY / DATE						
LM	LFM-26	LM-1 (31)		✓ REVISE DWG	RECORD EO	✓ REWORK	SCRAP	7/28/67 VDI	SUPPORT	RELIAB GROUP	GROUP LEADER 7-25-67	STRESS GROUP 7/31/67	LIAISON ENGRG	PROJ ENGR 7/16/67 · 8/1/67
LM		LM-2 (32)		PRIORITY C	DRAWING TITLE PANEL INSTL A/S-MID SECT~FWD & AFT TANK BLKH'D						ENGINEERING ORDER DRAWING NO. LDW280-51851			EO NO. B1
D. KLINGENER ISSUED BY X7033	VDI SECTION	335 GROUP NO.	25 PL	CODE IDENT NO. 26512	GRUMMAN AIRCRAFT ENGINEERING CORP BETHPAGE, L. I., N. Y.									

ENG 32 3 REV 3-66
7/28

01

NAS 9-1100

LFM ENG 32.2 REV 3-65	**GRUMMAN AIRCRAFT ENGINEERING CORP.** CODE IDENT NO. 26512 **ENGINEERING ORDER**	DWG NO. LDW280-51851	EO NO. B2
		CONTROL INFO NO. LDW280A 8574	

REVISE -13 INSTL AS SHOWN:

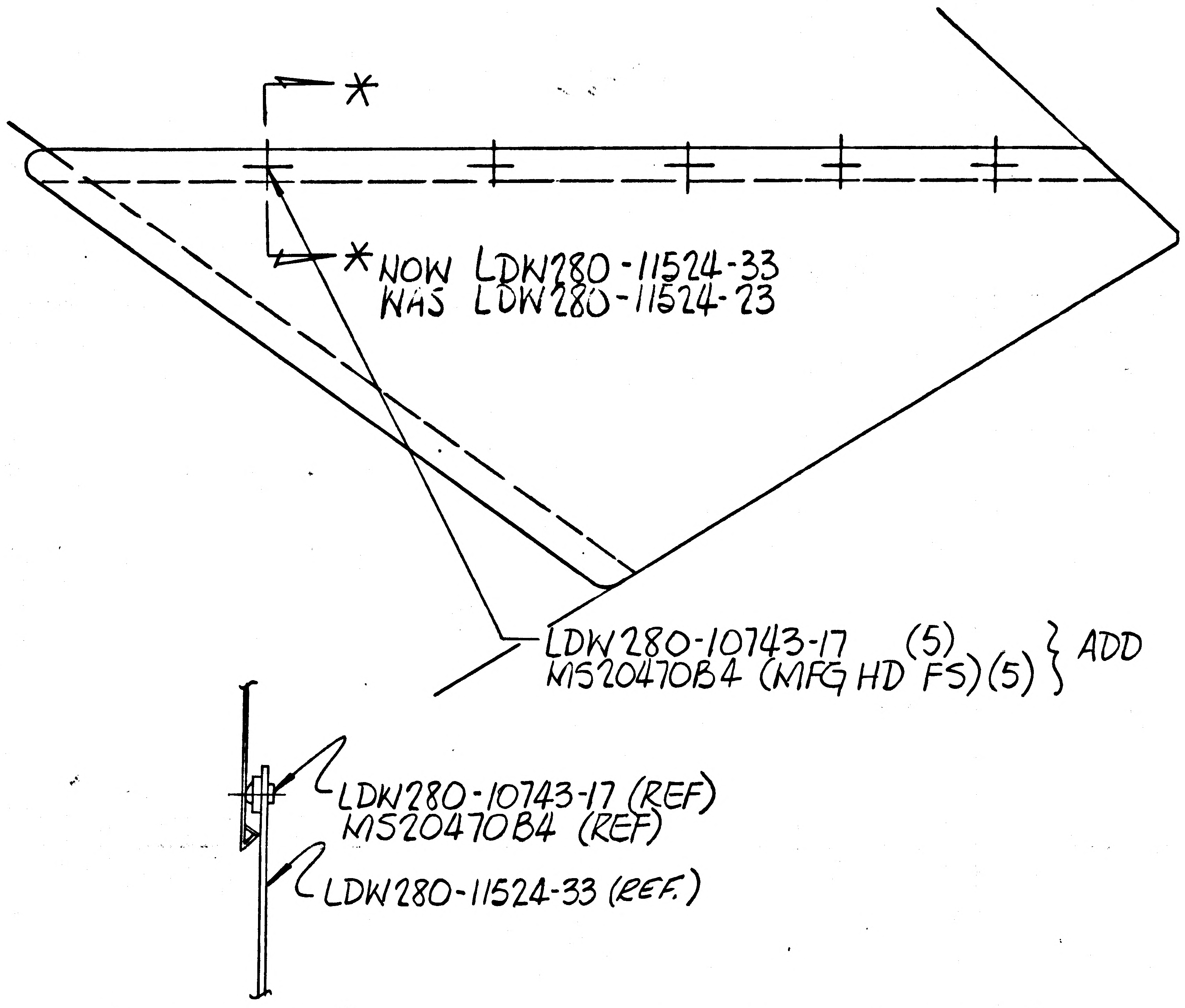
*
*NOW LDW280-11524-33
WAS LDW280-11524-23
LDW280-10743-17 (5)
MS20470B4 (MFG HD FS)(5)
} ADD
LDW280-10743-17 (REF)
MS20470B4 (REF)
LDW280-11524-33 (REF.)

SECT. *-* (USE NEXT AVAILABLE SECTION LETTERS)

DETAIL SPEC REQ		CL II ENGRG CHG		CL I ENGRG CHG	✓	LCD 1847		
REASON FOR EO: PLUME HEAT PROTECTION				DESCRIPTION OF EO: ON -13 ADDED SECT *-*. ADDED LDW280-11524-33, LDW280-10743-17 (5) & MS20470B4 (5). REMOVED LDW280-11524-23.				GAEC EO RELEASE C JK 8/12/67
MODEL	EFFECTIVITY: ~~PROCURING ACTIVITY NO.~~	GAEC UNIT NO.	SUB CONTR UNIT NO.	DRAWING CHANGE REQD	DISPOSITION OF PARTS	APPROVED BY		
LM	E1 LFM 26	LM1 (31)		REVISE DWG ✓	REWORK -13	DATE		
				RECORD EO	SCRAP			

APPROVED BY	DATE	
[illegible]	8/10	VDI
		SUPPORT THERMO
		RELIAB. GROUP
F.DR	8/10/67	GROUP LEADER
[illegible]	8/10	STRESS GROUP
REL FOR MFG PROJ KSC		~~LIAISON~~ ENGRG
[illegible]	8/10	PROJ ENGRG
Bot	8-11-67	~~GOVT~~

PRIORITY C	DRAWING TITLE: PANEL INSTL - A/S, M/S, FWD & AFT TANK BULKH'D.	DRAWING NO. LDW280-51851	EO NO. B2

8-11
ISSUED BY SALVADOR X7033 SECTION VDI GROUP NO. 335 PL 25

01 NAS 9-1100

ENG 32.1 REV 3-65

GRUMMAN AIRCRAFT ENGINEERING CORP.
CODE IDENT NO. 26512
ENGINEERING ORDER

DWG. NO. LDW280-51851
EO NO. C1
CONTROL INFO NO. LM83-2228

ON -11

REMOVE: LDW280P11485-5

ADD: LDW280P11485-5-1

DETAIL SPEC REQ	☐	CL II ENGRG CHG	☐	CL I ENGRG CHG	☑ LCD 2316

REASON FOR EO: PLUME IMPINGEMENT HIGHER HEAT RATE REQ'S ADDITIONAL PROTECTION

DESCRIPTION OF EO: ON -11 REMOVED: LDW280P11485-5 ADDED LDW280P11485-5-1

GAEC EO RELEASE: 5

MODEL	EFFECTIVITY		
	PROCURING ACTIVITY NO.	GAEC UNIT NO.	SUB CONTR UNIT NO.
LM		LM1(31)	

DRAWING CHANGE REQD		DISPOSITION OF PARTS	
REVISE DWG	RECORD EO	REWORK	SCRAP
✓		✓	

APPROVED BY			m.p.			JWC PE		
DATE	3 Nov	11/1/67	11/21/67	11/3	11/3/67	BPA	3 Nov	11-4
	SYS	~~SUPPORT~~ VDI	~~RELIAB. GROUP~~ THERMO	GROUP LEADER	STRE GROUP	~~LIAISON ENGRG~~	PROJ ENGRG	~~GOVT~~

PRIORITY	DRAWING TITLE	DRAWING NO.	EO NO.
C	SHIELD INSTL - FWD BULKHD	LDW280-51851	C1

ISSUED BY R. STONE x2163 SECTION PROJ ENG GROUP NO. 812 PL 83

01

NAS 9-1100

Ⓐ

ENG 32.1 REV 3-65

GRUMMAN AIRCRAFT ENGINEERING CORP.
CODE IDENT NO. 26512
ENGINEERING ORDER

DWG. NO. LDW280-51851
EO NO. C2
CONTROL INFO NO. LDW280B0318

IN F/D, B/M & M/B, REMOVE -1,-3,-5 & -7

ADD LM2 EFF TO -9,-11,-13 & -15 N/A LDW280-51150 1 EA REQD.

DETAIL SPEC REQ		CL II ENGRG CHG		CL I ENGRG CHG	✓	LCD 1847

(5)

REASON FOR EO: PLUME PROTECTION

DESCRIPTION OF EO:
REMOVED -1,-3,-5 & -7
ADDED LM2 TO -9,-11,-13 & -15.

Ⓡ GAEC EO RELEASE: JK 11/14/67

MODEL	PROCURING ACTIVITY NO.	GAEC UNIT NO.	SUB CONTR UNIT NO.
LM		LM2 (32)	

DRAWING CHANGE REQD: REVISE DWG	RECORD EO	DISPOSITION OF PARTS: REWORK	SCRAP
✓			✓

	APPROVED BY			GROUP LEADER	STRESS GROUP	LIAISON ENGRG	PROJ ENGRG	
				FNR	GR		9TRB	
DATE	11/8/67			11/8/67	11/8/67		11/1/67	11-4-67
0	VDI	SUPPORT	RELIAB. GROUP					

PRIORITY: C
DRAWING TITLE: PANEL INSTL A/S, M/S - FWD & AFT TANK BLKH
DRAWING NO. LDW280-51851
EO NO. C2

11/21/67
ISSUED BY SALVADOR X7033
SECTION VDI
GROUP NO. 335
PL 25

01

NAS 9-1100

B

ENG 32.1 REV 3-65

GRUMMAN AIRCRAFT ENGINEERING CORP.
CODE IDENT NO. 26512
ENGINEERING ORDER

DWG. NO. LDW280-51851
EO NO. C3
CONTROL INFO NO. LDW 280B0246

IN M/B ON-11 INSTL. REMOVE EFF. LM-2(32)

ADD -17 INSTL., EFFECTIVE LM-2(32), SAME AS -11 EXCEPT
LDW280P11485-19 REPLACES LDW280P11485-5

DETAIL SPEC REQ ☐ CL II ENGRG CHG ☐ CL I ENGRG CHG ✓ LCD2316

(5)

REASON FOR EO: TO IMPROVE PLUME IMPINGEMENT THERMODYNAMICS

DESCRIPTION OF EO: ON-11 INSTL REMOVED EFF LM-2(32), CREATED -17 INSTL. FOR LM-2(32). -17 SAME AS-11 EXCEPT LDW280P11485-19 REPLACED LDW280P11485-5

GAEC EO RELEASE: 11/16/67

MODEL	EFFECTIVITY: PROCURING ACTIVITY NO.	GAEC UNIT NO.	SUB CONTR UNIT NO.
LM		LM-2 (32)	

DRAWING CHANGE REQD: REVISE DWG ✓ RECORD EO ☐

DISPOSITION OF PARTS: REWORK ✓ SCRAP ☐

			SUPPORT	RELIAB. GROUP	GROUP LEADER	STRESS GROUP	LIAISON ENGRG	PROJ ENGRG	
APPROVED BY					FDR				
DATE	11/11/67				11-1-67	11/13/67		11/11/67	11-14-67
	R	VDI							

PRIORITY: C

DRAWING TITLE: PANEL INSTL. - ASCENT STAGE MID-SECTION FWD & AFT. BULKHEAD

DRAWING NO. LDW280-51851

EO NO. C3

ISSUED BY 11-21 P. FRANZESE x1394 11/8/67 SECTION VDI GROUP NO. 335 PL 25

01

NAS 9-1100

QTY PER ASSEMBLY							CODE IDENT	PART NO.	I&T	NOMENCLATURE OR DESCRIPTION	MATERIAL	GOVT SPEC	COML SPEC	STOCK SIZE	PROCESS SYM	FINISH NO.	ZONE
				-5	-3	-1											
								NAS1097AD3	E	RIVET	STD PART						
						12.		NAS697C04L		NUT PLATE							
				5	4.			NAS680A04		NUT PLATE							
				5.	4.			NAS463WK-DD10L		SHIM							
								MS20470AD3		RIVET	STD PART						
				1.		12.		GS550K-04-1		SCREW	GRUMMAN STD						
				1				GR11C-1		WASHER	GRUMMAN STD						
																	14B
				9	9	14.		LDW280-14344-7		SCREW ASSY	SEE DWG						3B
				1				LDW280-11436-22		SHIELD							13C
					1			-21									17C
				1				-20									14B
					1			-19									16B
				1				LDW280-11436-17									14B
						1.		LDW280-11435-25									4C
						1.		-23									3C
						1.		-21									8B
						1.		LDW280-11435-19		SHIELD	SEE DWG						7C
								LDW280-51852-5		BHD INSTL					NONE	NONE	14A
								LDW280-51852-3		BHD INSTL					NONE	NONE	16A
								LDW280-51852-1	E	BHD INSTL					NONE	NONE	6A

SYM OR NO.	PROCESS OR FINISH	GRUMMAN SPEC OR MILITARY SPEC	SYM OR NO.	PROCESS OR FINISH	GRUMMAN SPEC OR MILITARY SPEC	SYM OR NO.	PROCESS OR FINISH	GRUMMAN SPEC OR MILITARY SPEC

I & T: IDENTIFICATION AND TRACEABILITY IN ACCORDANCE WITH : NONE

GRUMMAN AIRCRAFT ENGRG CORP, BETHPAGE, L. I., NEW YORK

SIZE	CODE IDENT NO.	
B	26512	LDW280-51852

SCALE NONE

SHEET 2.00

ENG 77.2 7-65

01

NAS 9-1100

01/03 NAS 9-1100

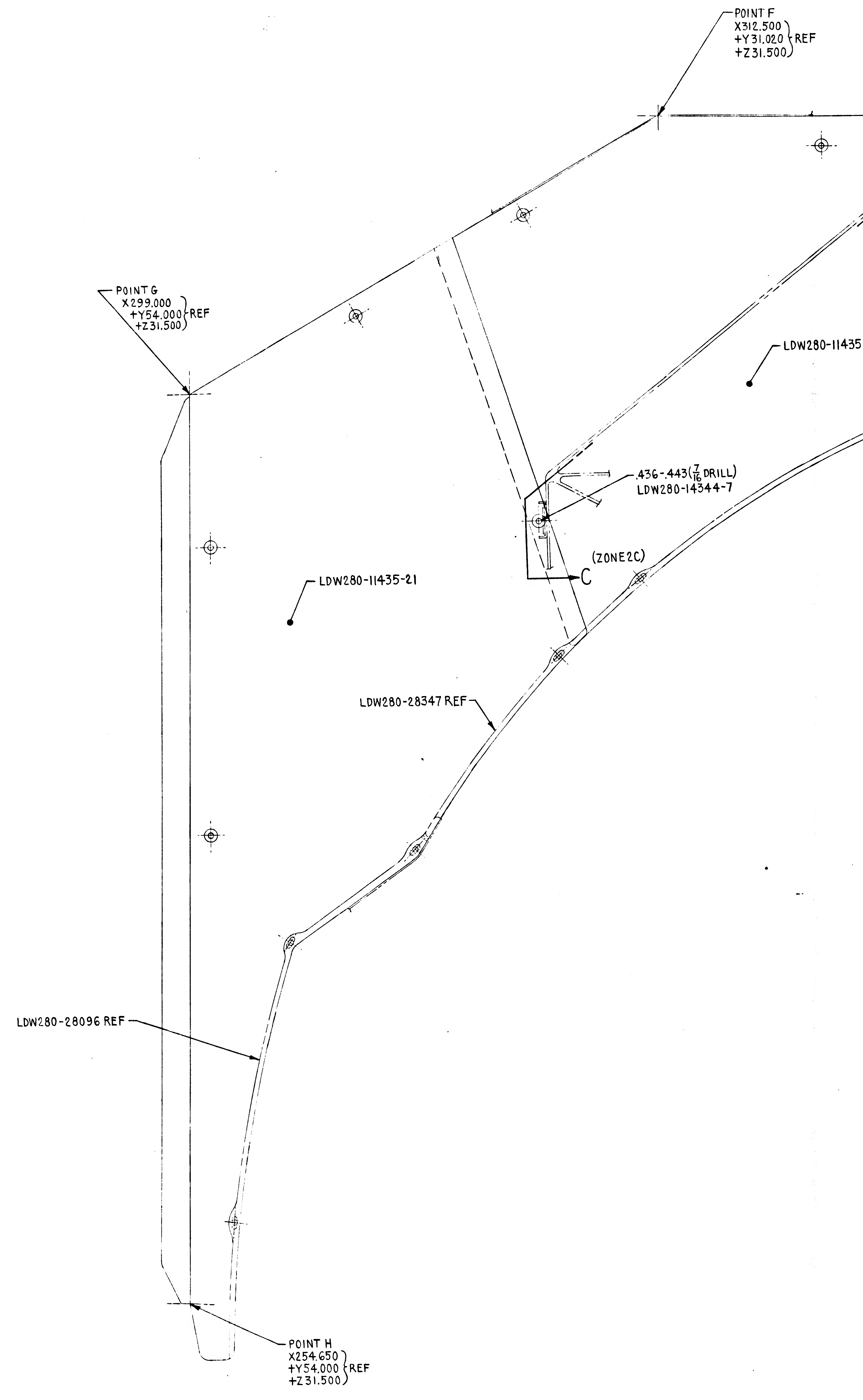
POINT F
X312.500
+Y31.020 REF
+Z31.500
POINT G
X299.000
+Y54.000 REF
+Z31.500
LDW280-11435
.436-.443($\frac{7}{16}$ DRILL)
LDW280-14344-7
(ZONE2C)
C
LDW280-11435-21
LDW280-28347 REF
LDW280-28096 REF
POINT H
X254.650
+Y54.000 REF
+Z31.500

3/3

CODE IDENT NO. 26512

LDW280-51852 SH 3

02/03 NAS 9-1100

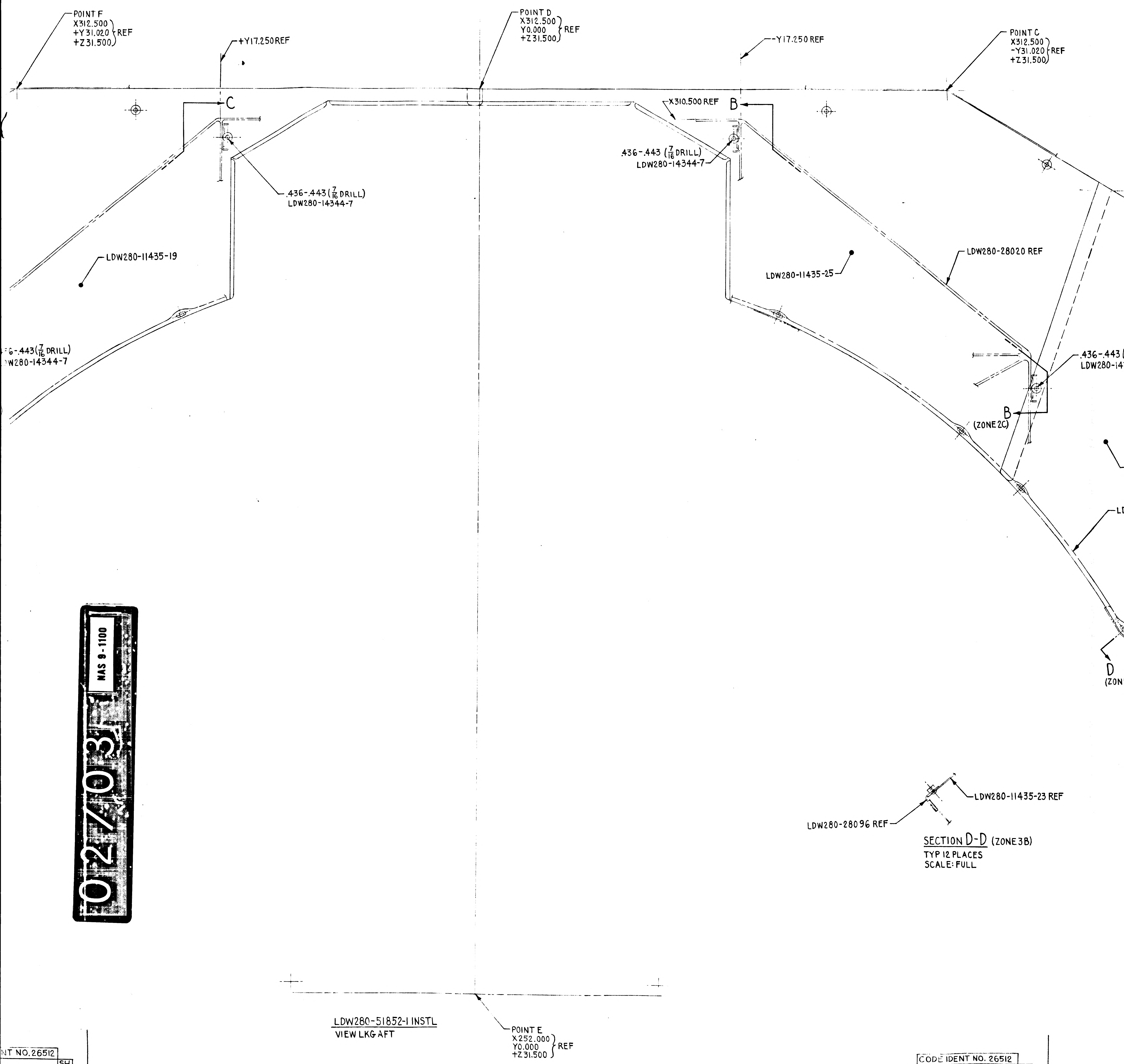
POINT F
X312.500
+Y31.020 REF
+Z31.500
+Y17.250 REF
POINT D
X312.500
Y0.000 REF
+Z31.500
-Y17.250 REF
POINT C
X312.500
-Y31.020 REF
+Z31.500
C
X310.500 REF
B
.436-.443 (7/16 DRILL)
LDW280-14344-7
.436-.443 (7/16 DRILL)
LDW280-14344-7
LDW280-11435-19
LDW280-11435-25
LDW280-28020 REF
.436-.443
LDW280-14
6-.443 (7/16 DRILL)
W280-14344-7
B
(ZONE 2C)
LD
D
(ZON
LDW280-11435-23 REF
LDW280-28096 REF
POINT E
X252.000
Y0.000 REF
+Z31.500

SECTION D-D (ZONE 3B)
TYP 12 PLACES
SCALE: FULL

LDW280-51852-1 INSTL
VIEW LKG AFT

NT NO. 26512
0-51852 SH 3

CODE IDENT NO. 26512
LDW280-51852 SH 3

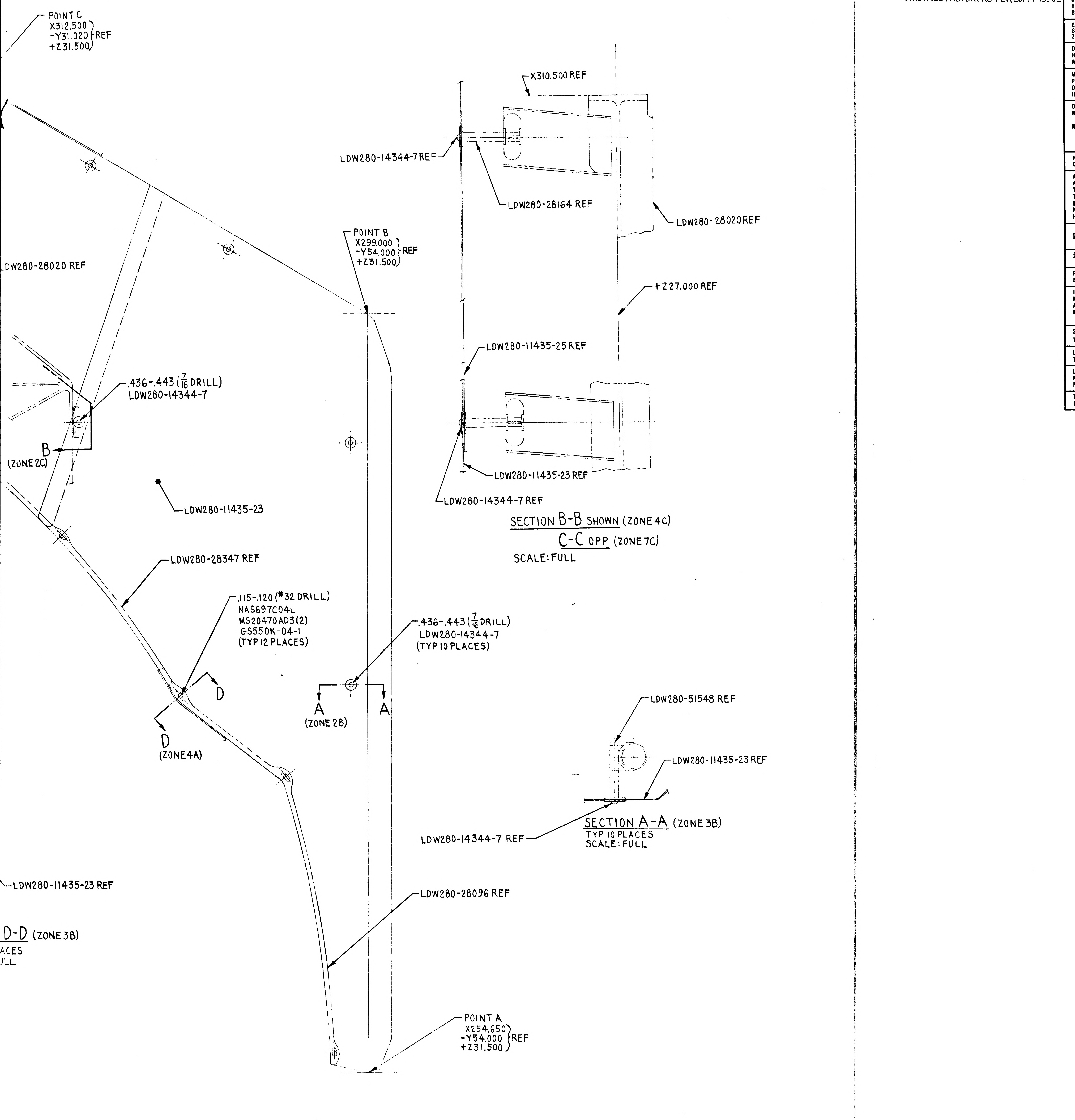
POINT C
X312.500
-Y31.020
+Z31.500
REF
LDW280-28020 REF
.436-.443 (7/16 DRILL)
LDW280-14344-7
B
(ZONE 2C)
LDW280-11435-23
LDW280-28347 REF
.115-.120 (#32 DRILL)
NAS697C04L
MS20470AD3(2)
GS550K-04-1
(TYP 12 PLACES)
D
D
(ZONE4A)
POINT B
X299.000
-Y54.000
+Z31.500
REF
.436-.443 (7/16 DRILL)
LDW280-14344-7
(TYP 10 PLACES)
A
A
(ZONE 2B)
LDW280-11435-23 REF
D-D (ZONE 3B)
ACES
LL
LDW280-28096 REF
POINT A
X254.650
-Y54.000
+Z31.500
REF
X310.500 REF
LDW280-14344-7 REF
LDW280-28164 REF
LDW280-28020 REF
+Z27.000 REF
LDW280-11435-25 REF
LDW280-11435-23 REF
LDW280-14344-7 REF
SECTION B-B SHOWN (ZONE 4C)
C-C OPP (ZONE 7C)
SCALE: FULL
LDW280-51548 REF
LDW280-11435-23 REF
LDW280-14344-7 REF
SECTION A-A (ZONE 3B)
TYP 10 PLACES
SCALE: FULL
3
2
1
D
C
B
A

NOTES:
1. INSTALL FASTENERS PER LSP14-15302

MANUFACTURING OPERATIONS UNLESS OTHERWISE SPECIFIED NOTES CHECKED √ APPLY TO THIS DWG.	
PART NUMBER AND ALL OTHER MARKINGS IN REGION MARKED ⊠ USE BOTH SIDES IF NECESSARY.	
FILLET AND INSIDE CORNER RADII TOLERANCES .016R TO .062R ± .010 .063R TO .250R ± .015 OVER .250R ± .030	
DEPTH SHOWN FOR TAPPED HOLES IS FULL THDS. 2-3 IMP THDS. BEYOND PERMISSIBLE.	
EXTERNAL THREAD LENGTH SHOWN INCLUDES 2 IMPERFECT THREADS MAX.	
DO NOT CADMIUM PLATE & PAINT HOLES OR SURFACES MARKED WITH DOUBLE ASTERISK.	
MISMATCH STEP OF ± .005 PERMISSIBLE DUE TO CHANGE OF CUTTERS AT INSIDE INTERSECTING SURFACES.	
DIAMETERS MARKED MUST BE CONCENTRIC WITHIN FULL INDICATOR READING	
HOLES MUST BE KEPT FREE OF CHROME PLATING SOLUTION.	
ALL DIMENSIONS SHOWN TO BE MET AFTER CADMIUM PLATING. THICKNESS OF PLATE .0003 MIN. TO .0005 MAX. MIN. THICKNESS TO BE .0002 ON THREADED AREAS. NO ALLOWANCE FOR PLATING IN HOLES	
125 √ SURFACE ROUGHNESS INCLUDING REAMED HOLES PER MIL-STD-10	
200 √ FOR ALL DRILLED HOLES	
REMOVE ALL BURRS. BREAK ALL EDGES .015-.031	
INSPECTION INFORMATION MINIMUM PERMISSIBLE AVERAGE EDGE DISTANCE MARKED IS	
SYMBOL √ DENOTES SURFACE TO BE MACHINED	
UNLESS OTHERWISE SPECIFIED TOLERANCE ON FLANGES IS ± 1/32	
LENGTHS OF AN, NAS & MS AL ALY RIVETS SHORTER THAN 1 INCH ARE NOT SPECIFIED.	√
TOLERANCE ON LOFTED DELINEATIONS IS	

DWG SIZE 40 X 96

PRINTING INFO ONLY
FULL SIZE SHEET AREA (42 X 98) = 28 SQ. FT.
1/2 SIZE SHEET AREA (1/4 OF FULL) = 7 SQ. FT.
PRINT TRIM LINE

03/03

NAS 9-1100

LDW280-51852

LDW280-51852

NT NO. 26512
80-51852 SH 3

	GRUMMAN AIRCRAFT ENGRG CORP., BETHPAGE, L. I., NEW YORK			
LEM	SIZE K	CODE IDENT NO. 26512	LDW280-51852	
MODEL OR END ITEM	SCALE ½ & NOTED		SHEET 3.00	

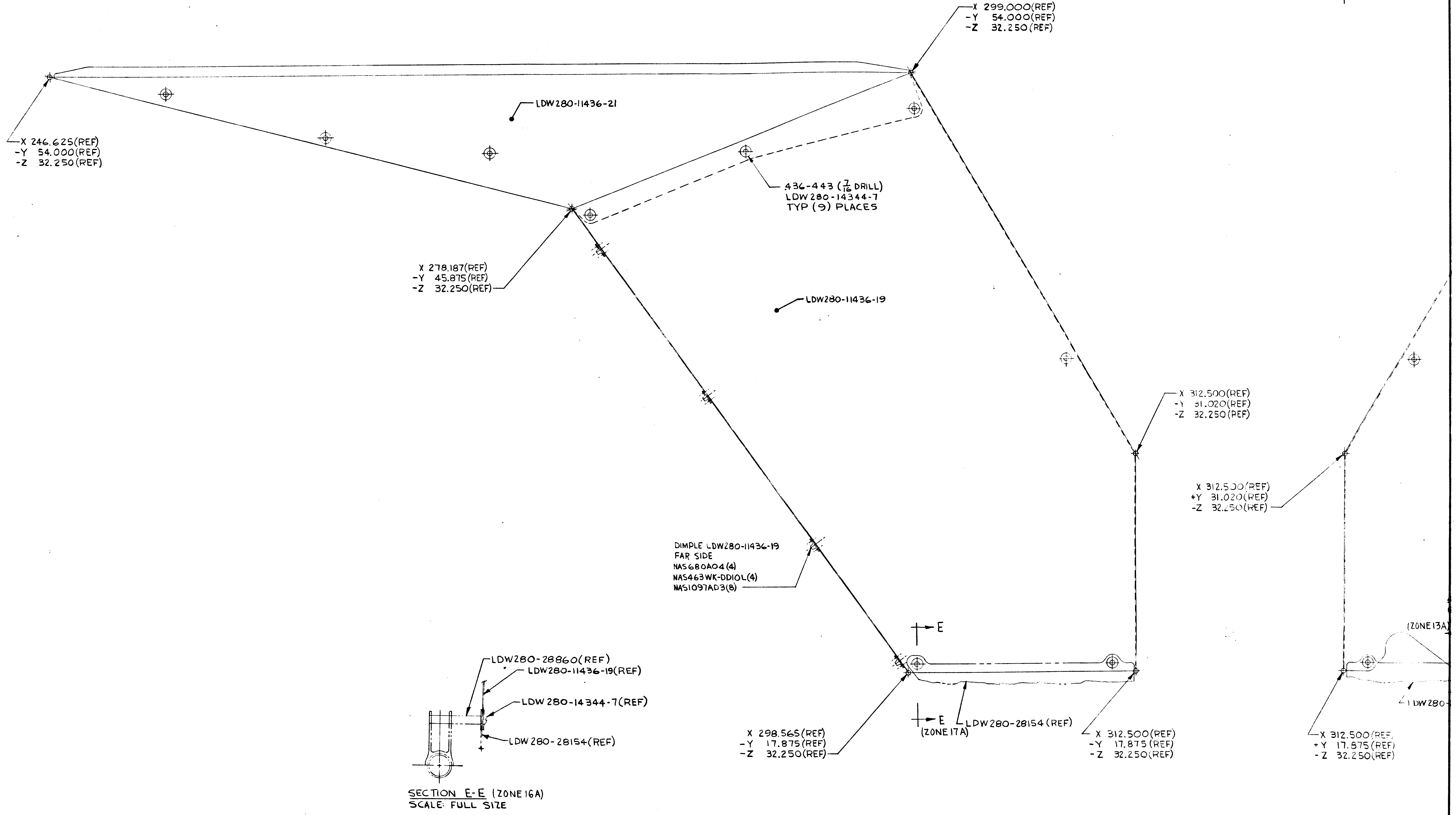
X 299.000(REF)
-Y 54.000(REF)
-Z 32.250(REF)
LDW280-11436-21
X 246.625(REF)
-Y 54.000(REF)
-Z 32.250(REF)
.436-.443 (7/16 DRILL)
LDW280-14344-7
TYP (9) PLACES
X 278.187(REF)
-Y 45.875(REF)
-Z 32.250(REF)
LDW280-11436-19
X 312.500(REF)
-Y 31.020(REF)
-Z 32.250(REF)
X 312.500(REF)
+Y 31.020(REF)
-Z 32.250(REF)
DIMPLE LDW280-11436-19
FAR SIDE
NAS680A04(4)
NAS463WK-DD10L(4)
NAS1097AD3(8)
E
E
(ZONE 17A)
(ZONE 13A)
LDW280-
LDW280-28154 (REF)
X 298.565(REF)
-Y 17.875(REF)
-Z 32.250(REF)
X 312.500(REF)
-Y 17.875(REF)
-Z 32.250(REF)
X 312.500(REF)
+Y 17.875(REF)
-Z 32.250(REF)
LDW280-28860(REF)
LDW280-11436-19(REF)
LDW280-14344-7(REF)
LDW280-28154(REF)

SECTION E-E (ZONE 16A)
SCALE: FULL SIZE

LDW280-51852-3 INSTL

UP
INBD

01/02 NAS 9-1100

2/N

CODE IDENT NO. 26512	
LDW280-51852	SH 4

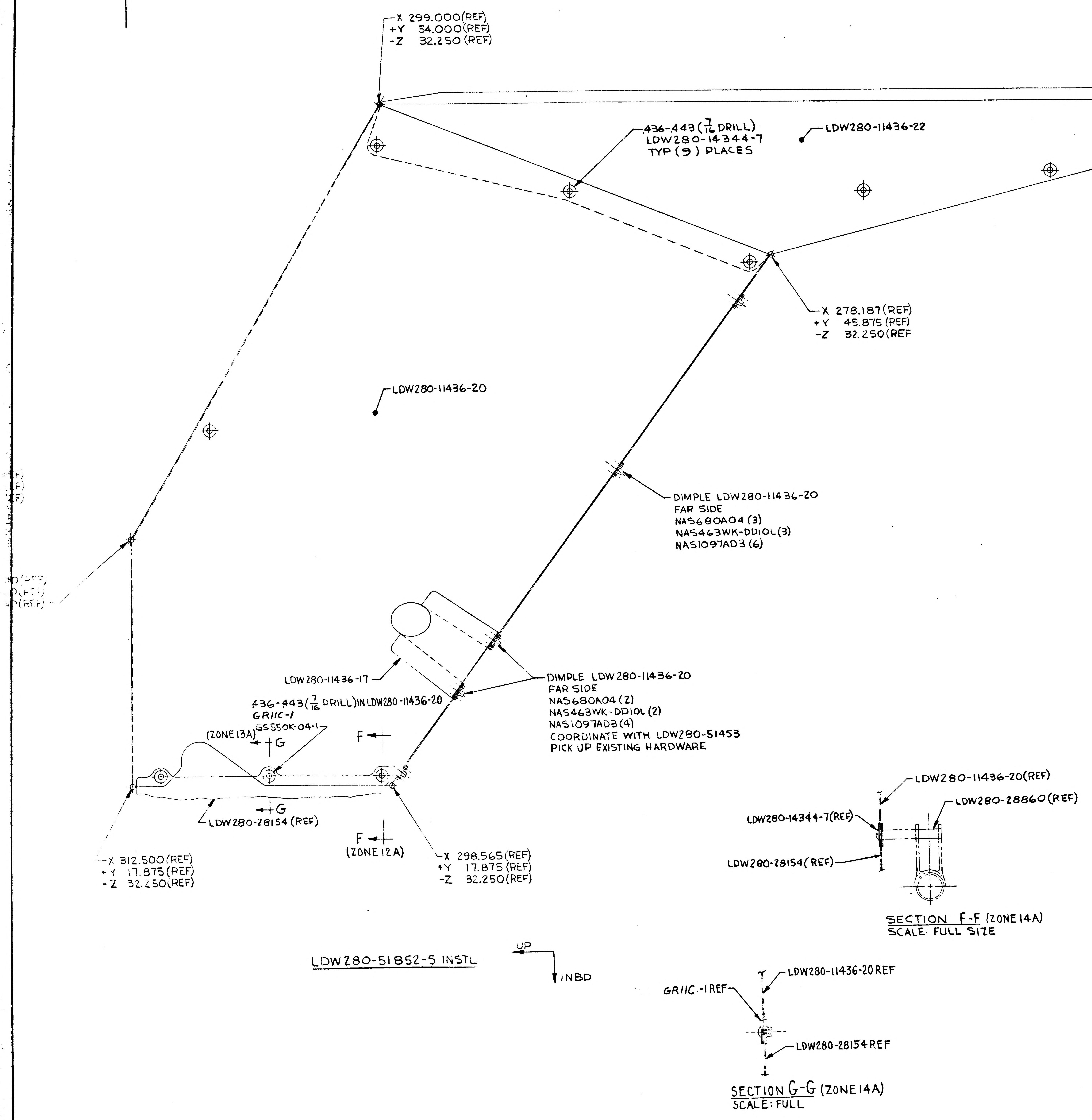
X 299.000(REF)
+Y 54.000(REF)
-Z 32.250 (REF)
436-443 (7/16 DRILL)
LDW280-14344-7
TYP (9) PLACES
LDW280-11436-22
X 246.625(REF)
+Y 54.000(REF)
-Z 32.250(REF)
X 278.187(REF)
+Y 45.875 (REF)
-Z 32.250(REF
LDW280-11436-20
DIMPLE LDW280-11436-20
FAR SIDE
NAS680A04 (3)
NAS463WK-DD10L(3)
NAS1097AD3 (6)
LDW280-11436-17
436-443(7/16 DRILL) IN LDW280-11436-20
GR11C-1
GS550K-04-1
(ZONE 13A)
G
F
DIMPLE LDW280-11436-20
FAR SIDE
NAS680A04 (2)
NAS463WK-DD10L (2)
NAS1097AD3 (4)
COORDINATE WITH LDW280-51453
PICK UP EXISTING HARDWARE
G
LDW280-28154 (REF)
F
(ZONE 12 A)
X 312.500(REF)
+Y 17.875(REF)
-Z 32.250(REF)
X 298.565(REF)
+Y 17.875 (REF)
-Z 32.250(REF)
LDW280-11436-20(REF)
LDW280-28860(REF)
LDW280-14344-7(REF)
LDW280-28154(REF)
SECTION F-F (ZONE 14A)
SCALE: FULL SIZE
LDW280-51852-5 INSTL
UP
INBD
GR11C-1 REF
LDW280-11436-20 REF
LDW280-28154 REF
SECTION G-G (ZONE 14A)
SCALE: FULL
15
14
13
12
11
C
B
A

MANUFACTURING OPERATIONS UNLESS OTHERWISE SPECIFIED NOTES CHECKED √ APPLY TO THIS DWG.	
PART NUMBER AND ALL OTHER MARKINGS IN REGION MARKED ⊠ USE BOTH SIDES IF NECESSARY.	
FILLET AND INSIDE CORNER RADII TOLERANCES .016R TO .062R ± .010 .063R TO .250R ± .015 OVER .250R ± .030	
DEPTH SHOWN FOR TAPPED HOLES IS FULL THDS. 2-3 IMP THDS. BEYOND PERMISSIBLE.	
EXTERNAL THREAD LENGTH SHOWN INCLUDES 2 IMPERFECT THREADS MAX.	
DO NOT CADMIUM PLATE & PAINT HOLES OR SURFACES MARKED WITH DOUBLE ASTERISK.	
MISMATCH STEP OF ± .005 PERMISSIBLE DUE TO CHANGE OF CUTTERS AT INSIDE INTERSECTING SURFACES.	
DIAMETERS MARKED MUST BE CONCENTRIC WITHIN FULL INDICATOR READING	
HOLES MUST BE KEPT FREE OF CHROME PLATING SOLUTION.	
ALL DIMENSIONS SHOWN TO BE MET AFTER CADMIUM PLATING. THICKNESS OF PLATE .0003 MIN. TO .0005 MAX. MIN. THICKNESS TO BE .0002 ON THREADED AREAS. NO ALLOWANCE FOR PLATING IN HOLES	
125√ SURFACE ROUGHNESS INCLUDING REAMED HOLES PER MIL-STD-10	
200√ FOR ALL DRILLED HOLES	
REMOVE ALL BURRS. BREAK ALL EDGES .015-.031	
INSPECTION INFORMATION MINIMUM PERMISSIBLE AVERAGE EDGE DISTANCE MARKED IS	
SYMBOL √ DENOTES SURFACE TO BE MACHINED	
UNLESS OTHERWISE SPECIFIED TOLERANCE ON FLANGES IS ± 1/32	
LENGTHS OF AN, NAS & MS AL ALY RIVETS SHORTER THAN 1 INCH ARE NOT SPECIFIED.	√
TOLERANCE ON LOFTED DELINEATIONS IS	

DWG SIZE 34 X 88

PRINTING INFO ONLY
FULL SIZE SHEET AREA (36 X 90)= 22.5 SQ. FT.
1/2 SIZE SHEET AREA (1/4 OF FULL)= 5.625 SQ. FT.

PRINT TRIM LINE

LDW280-51852

LDW280-51852

02/02

NAS 9-1100

	GRUMMAN AIRCRAFT ENGRG CORP., BETHPAGE, L. I., NEW YORK		
LEM	SIZE J	CODE IDENT NO. 26512	LDW280-51852
MODEL OR END ITEM	SCALE 1/2 & NOTED		SHEET 4.00

E IDENT NO. 26512
W280-51852 SH 4

01 NAS 9-1100

ENG 32.2 REV 3-65 *

GRUMMAN AIRCRAFT ENGINEERING CORP.
CODE IDENT NO. 26512
ENGINEERING ORDER

DWG NO.	LDW280-51852	EO NO.	A1
CONTROL INFO NO.	LDW280A-2036		

IN F/D & B/M REVISE -3 & -5 INSTL AS NOTED

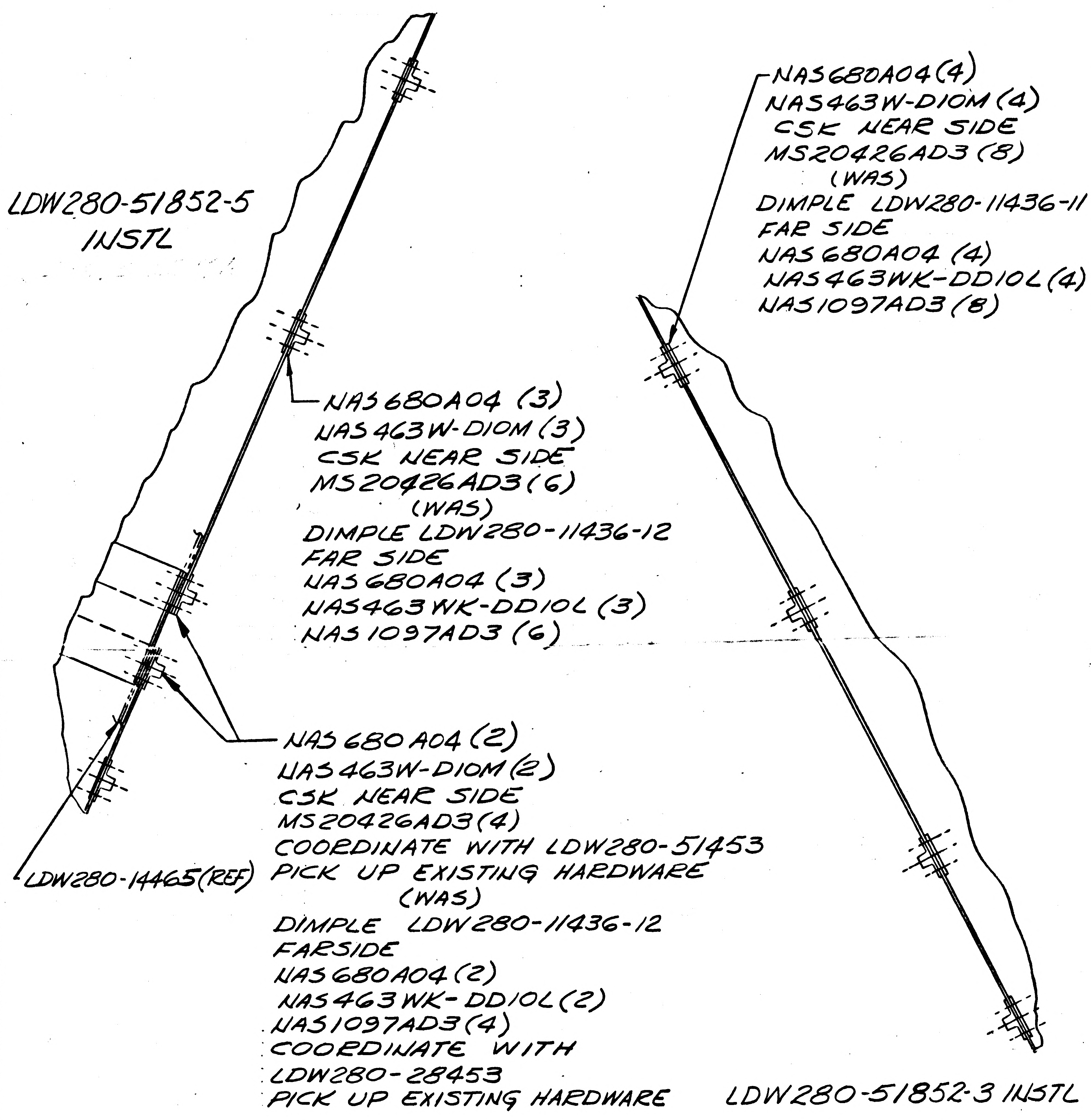
LDW280-51852-5
INSTL

NAS680A04 (3)
NAS463W-D1OM (3)
CSK NEAR SIDE
MS20426AD3 (6)
(WAS)
DIMPLE LDW280-11436-12
FAR SIDE
NAS680A04 (3)
NAS463WK-DD10L (3)
NAS1097AD3 (6)

NAS680A04 (2)
NAS463W-D1OM (2)
CSK NEAR SIDE
MS20426AD3 (4)
COORDINATE WITH LDW280-51453
PICK UP EXISTING HARDWARE
(WAS)
DIMPLE LDW280-11436-12
FARSIDE
NAS680A04 (2)
NAS463WK-DD10L (2)
NAS1097AD3 (4)
COORDINATE WITH
LDW280-28453
PICK UP EXISTING HARDWARE

LDW280-14465 (REF)

NAS680A04 (4)
NAS463W-D1OM (4)
CSK NEAR SIDE
MS20426AD3 (8)
(WAS)
DIMPLE LDW280-11436-11
FAR SIDE
NAS680A04 (4)
NAS463WK-DD10L (4)
NAS1097AD3 (8)

LDW280-51852-3 INSTL

DESC OF EO (CONT)
ON-5 ~ NAS463W-D1OM (5) CSK NEAR SIDE, MS20426AD3 (10) WAS NAS463WK-DD10L (5) NAS1097AD3 (10) REMOVED "DIMPLE LDW280-11436-12 FAR SIDE (2 PLCS), COORDINATE WITH LDW280-51453 WAS LDW280-28453

DETAIL SPEC REQ	☐	CL II ENGRG CHG	✓	CL I ENGRG CHG	☐

3

REASON FOR EO	DESCRIPTION OF EO	GAEC EO RELEASE
SKIN VENTING REQUIRED	ON-3, NAS463WK-D1OM (4) WAS NAS463WK-DD10L (4) MS20426AD3 (8) WAS NAS1097AD3 (8), REMOVED "DIMPLE LDW280-11436-11 FAR SIDE"	K 10/25

MODEL	EFFECTIVITY: PROCURING ACTIVITY NO.	GAEC UNIT NO.	SUB CONTR UNIT NO.
LM	LM-1 (31)		
LM	LM-2 (32)		

DRAWING CHANGE REQD: REVISE DWG	RECORD EO	DISPOSITION OF PARTS: REWORK	SCRAP
✓		✓	

APPROVED BY					JV				
DATE	10/15/66	10/17/66			10/17		10-17-66		
	VDI	SUPPORT	RELIAB. GROUP	GROUP LEADER	STRESS GROUP	LIAISON ENGRG	PROJ ENGRG	~~GOVT~~	

PRIORITY	DRAWING TITLE	DRAWING NO.	EO NO.
C	PANEL INSTL ~ A/S ~ M/S FWD & AFT UPPER BLKHD	LDW280-51852	A1

ISSUED BY R. GORTLER SECTION VDI X1441 GROUP NO. 335 PL 35

ENG 32.2 REV 3-65

GRUMMAN AIRCRAFT ENGINEERING CORP.
CODE IDENT NO. 26512
ENGINEERING ORDER *

DWG. NO. LDW280-51852		EO NO. A2
CONTROL INFO NO. LDW280A-2859		

IN F/D & B/M REVISE DWG AS SHOWN BELOW:

LDW280-11435-17 WAS -25
LDW280-11435-18 WAS -19
LDW280-11435-15 WAS -23
LDW280-11435-16 WAS -21

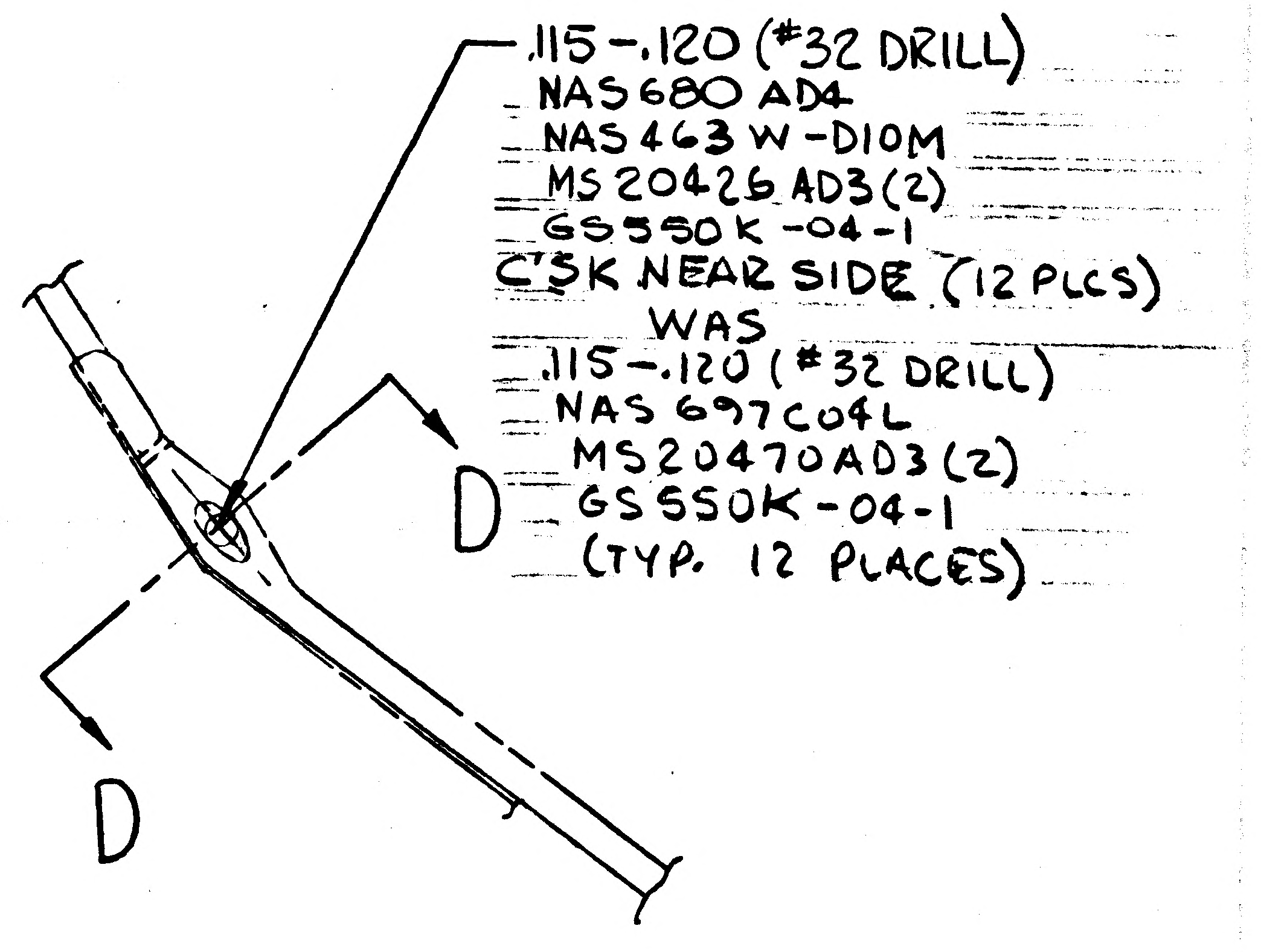
.115-.120 (#32 DRILL)
NAS680 AD4
NAS463 W-D10M
MS20426 AD3(2)
GS550K-04-1
CSK NEAR SIDE (12 PLCS)
WAS
.115-.120 (#32 DRILL)
NAS697C04L
MS20470AD3(2)
GS550K-04-1
(TYP. 12 PLACES)
D
D

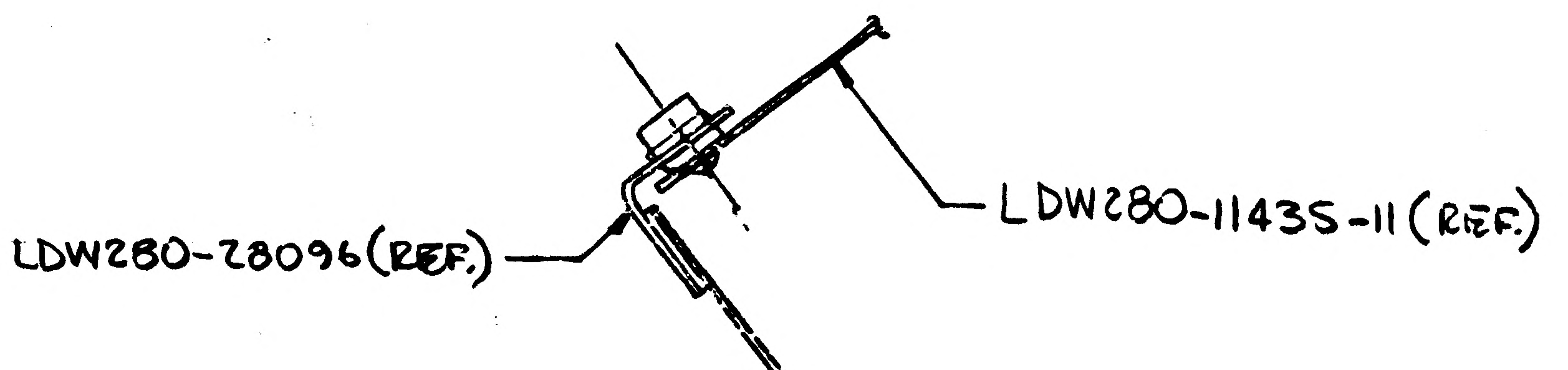
LDW280-28096(REF.)
LDW280-11435-11(REF.)

SECTION D-D (ZONE 3B) (REF.)

DESCRIPTION OF E.O. CONT'D.

LDW280-11435-15 WAS -23 & LDW280-11435-16 WAS -21, NAS680AD4 WAS NAS697C04L, MS20426AD3 (2) WAS MS20470AD3 (2).

DETAIL SPEC REQ	☐	CL II ENGRG CHG	☑	CL I ENGRG CHG	☐

3

REASON FOR EO	DESCRIPTION OF EO	(R) GAEC & EO RELEASE
TO PROVIDE SKIN GAP FOR VENTING & CORRECT PARTS CALLOUT	IN F/D & B/M ON-1 INSTL. REVISED PARTS CALLOUT LDW280-11435-17 WAS-25, LDW280-11435-18 WAS-19	11-1

MODEL	PROCURING ACTIVITY NO.	GAEC UNIT NO.	SUB CONTR UNIT NO.
LM		LM-1 (31)	
LM		LM-2 (32	

DRAWING CHANGE REQD: REVISE DWG	RECORD EO	DISPOSITION OF PARTS: REWORK	SCRAP
✓		✓	

APPROVED BY								
DATE	10/31/66	10/31		10/31			10-31-66	11/1/66
5	VDI		RELIAB. GROUP	GROUP LEADER	STRESS GROUP	LIAISON ENGRG	PROJ ENGRG	

PRIORITY	DRAWING TITLE	DRAWING NO.	EO NO.
C	BULKHD. INSTL. FWD & AFT.-UPPER M/S-A/S.	LDW280-51852	A2

ISSUED BY C.A. PAEZ SECTION V.D.I. GROUP NO. 335 PL 35

01 NAS 9-1100

B

ENG 32.1 REV 3-65

*

GRUMMAN AIRCRAFT ENGINEERING CORP.
CODE IDENT NO. 26512
ENGINEERING ORDER

DWG. NO. LDW280-51852
EO NO. A4
CONTROL INFO NO. LM-5-12473

ON-1
IN MAIN VIEW AT ZONE 8C AT OVERLAP OF LDW280-11435-16 & -18
ADD GR500A-4A (3)
(LOCATE FROM LDW280-11435-16)
INSTALL PER LSP-14-16303

RELEASED BY LIAISON

DETAIL SPEC REQ		CL II ENGRG CHG		CL I ENGRG CHG		5

REASON FOR EO	DESCRIPTION OF EO	GAEC EO RELEASE
OMISSION OF FASTENER CALL OUT FOR -16 & -18. CALL OUT FOR -15 & -17 TAKEN CARE OF ON EO A3	ON-1 ADDED AT ZONE 8C GR500A-4A (3) (LOCATE FROM LDW280-11435-16 INSTALL PER LSP-14-16303	® C VK

MODEL	PROCURING ACTIVITY NO.	GAEC UNIT NO.	SUB CONTR UNIT NO.
LM		LM-1 (31)	
		LM-2 (32)	

DRAWING CHANGE REQD: REVISE DWG	RECORD EO	DISPOSITION OF PARTS: REWORK	SCRAP			SUPPORT	RELIAB GROUP	GROUP LEADER	STRESS GROUP	LIAISON ENGRG	PROJ ENGRG	GOVT
✓		✓		APPROVED BY	FDR			–	JFA	JFJ	RMC	
				DATE	4-11-67			–	2-24-67	2-24-67	3-2-67	2/24/67
				1	V.D.I.							

PRIORITY	DRAWING TITLE	DRAWING NO.	EO NO.
C	PANEL INSTL - ASCENT MID SECT FWD & AFT UPPER BULKHEAD	LDW280-51852	A4

ISSUED BY LIAISON, P. HUSTED, 6217 SECTION V D I GROUP NO. 335 PL 35

01

NAS 9-1100

01

NAS 9-1100

B

ENG 32.2 REV 3-65

GRUMMAN AIRCRAFT ENGINEERING CORP.
CODE IDENT NO. 26512
ENGINEERING ORDER

DWG. NO. LDW280-51852		EO NO. A5	
CONTROL INFO NO. LM5-11949			

ON-1 REVISE F/D & B/M AS REQD

THIS IS A REVISION OF EO A2

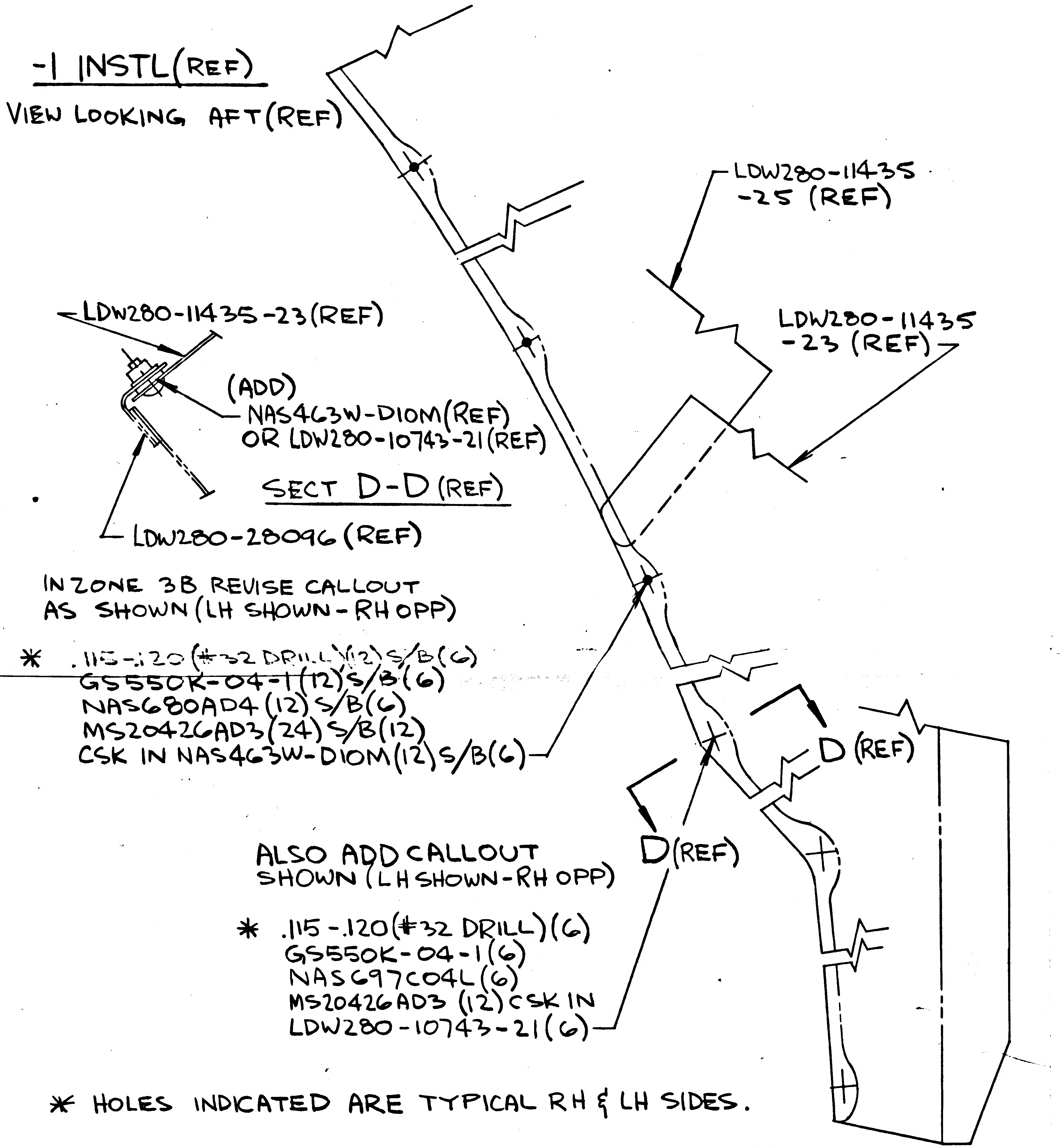

-1 INSTL(REF)
VIEW LOOKING AFT(REF)
LDW280-11435 -25 (REF)
LDW280-11435-23(REF)
LDW280-11435 -23 (REF)
(ADD)
NAS463W-D10M(REF)
OR LDW280-10743-21(REF)
SECT D-D (REF)
LDW280-28096 (REF)
D (REF)
D(REF)

IN ZONE 3B REVISE CALLOUT AS SHOWN (LH SHOWN-RH OPP)

* .115-.120 (#32 DRILL)(12) S/B (6)
~~GS550K-04-1(12)~~ S/B (6)
NAS680AD4 (12) S/B (6)
MS20426AD3 (24) S/B (12)
CSK IN NAS463W-D10M (12) S/B (6)

ALSO ADD CALLOUT SHOWN (LH SHOWN-RH OPP)

* .115-.120 (#32 DRILL)(6)
GS550K-04-1(6)
NAS697C04L(6)
MS20426AD3 (12) CSK IN
LDW280-10743-21(6)

* HOLES INDICATED ARE TYPICAL RH & LH SIDES.

RELEASED BY LIAISON

DETAIL SPEC REQ		CL II ENGRG CHG		CL I ENGRG CHG								5
REASON FOR EO WORK ACCOMPLISHED PRIOR TO EO A2 RELEASE				DESCRIPTION OF EO REF EO A2 ON-1 NAS680AD4(6) WAS (12), & NAS463W-D10M(6) WAS (12) & ADDED NAS697C04L(6) & LDW280-10743-21(6) AS REPLACEMENTS								GAEC C EO RELEASE JK
MODEL	EFFECTIVITY			DRAWING CHANGE REQD		DISPOSITION OF PARTS		APPROVED BY	UT ALW			
	PROCURING ACTIVITY NO.	GAEC UNIT NO.	SUB CONTR UNIT NO.	✓		✓		DATE	3/4/67	3/7/67	3-6-67	3-10-67
LM		LM-1 (31)		REVISE DWG	RECORD EO	REWORK	SCRAP	1	VDI	SUPPORT	RELIAB. GROUP	GROUP LEADER
LM		LM-2 (32)		PRIORITY C	DRAWING TITLE BULKHEAD INSTL - ASCENT MID SECT - FWD & AFT - UPPER THERMAL							

STRESS GROUP	LIAISON ENGRG	PROJ ENGRG	~~GOVT~~		
RMC			3-8-67		
DRAWING NO. LDW280-51852			EO NO. A5		

ISSUED BY ART WILSON X6510 SECTION VDI GROUP NO. 335 PL 5

GRUMMAN AIRCRAFT ENGINEERING CORP.
CODE IDENT NO 26512
ENGINEERING ORDER

ENG 32.2 REV 3-65   T   B

DWG NO. LEO-280   EO NO. 497
CONTROL INFO NO. LDW 280A-5768

(ADD) NOTE, "*. MATERIAL, FINISHES, HANDLING AND PERMISSIBLE DEVIATIONS PER LPC-280-16!", TO THE FOLLOWING DRAWINGS:

DRAWING NUMBER	TITLE	EFFECTIVITY	CHANGE NUMBER
LDW280-11444	SEE DWG.	LTA-8(18)	A9
LDW280-28160			A8
LDW280-28161			B1
LDW280-28163			A5
LDW280-28851			A7
LDW280-28852			A5
LDW280-28861		LTA-8(18)	A5
LDW280-11524		LM-1(31), LM-2(32)	A6
LDW280-51160			A7
LDW280-51161			A8
LDW280-51163			A3
LDW280-51851			A5
LDW280-51852			A6
LDW280-51861		LM-1(31), LM-2(32)	A7
LDW280-11422		LTA-8(18), LM-1(31), LM-2(32)	A2
LDW280-11423			A2
LDW280-11424			A4
LDW280-11425			B1
LDW280-11426			B5
LDW280-11427			B5
LDW280-11428			B5
LDW280-11429			B7
LDW280-11430			A6
LDW280-11431			B3
LDW280-11432	SEE DWG.	LTA-8(18), LM-1(31), LM-2(32)	B3

NOTE:
* = USE NEXT AVAILABLE №.

DETAIL SPEC REQ ✓   CL II ENGRG CHG   CL I ENGRG CHG   3

REASON FOR EO: LPC'S OMITTED ON DWG.
DESCRIPTION OF EO: ADDED NOTE *

GAEC EO RELEASE: C   VK 3/8/7

MODEL	PROCURING ACTIVITY NO.	GAEC UNIT NO.	SUB CONTR UNIT NO.
LM		NOTED	

DRAWING CHANGE REQD: REVISE DWG ✓   RECORD EO
DISPOSITION OF PARTS: REWORK ✓   SCRAP
APPROVED BY: JaP   DATE: 3/2/67   1   VDI
GROUP LEADER: 3/2/67   STRESS GROUP: 3/3/67   RELIAB GROUP   LIAISON ENGRG
PROJ ENGRG: Dam 3/6/67   3/7/67

PRIORITY: C
DRAWING TITLE: NOTED
DRAWING NO.: LEO-280
EO NO.: 497

ISSUED BY W. PAILK   SECTION VEH. DES. INT.   GROUP NO. 335   PT 35

01
NAS 9-1100

ENG 32.1 REV 3-65 C

GRUMMAN AIRCRAFT ENGINEERING CORP.
CODE IDENT NO. 26512
ENGINEERING ORDER

DWG NO. LDW280-51852		EO NO. A7	
CONTROL INFO NO. LM5-13029			

THIS IS A REVISION
OF EO A5

ON-1 INSTL:

"LDW280-10743-21" SHOULD BE "LDW280-10743-43"

RELEASED BY LIAISON

DETAIL SPEC REQ	☐	CL II ENGRG CHG	✓	CL I ENGRG CHG	☐	5

REASON FOR EO	DESCRIPTION OF EO	GAEC C EO RELEASE
DUPLICATION OF PART NUMBER	REFER EO A5 ON-1 "LDW280-10743-43" WAS "LDW280-10743-21"	JS 3-27-7 31 32 05 025

MODEL	EFFECTIVITY: PROCURING ACTIVITY NO.	GAEC UNIT NO.	SUB CONTR UNIT NO.
LM		LM-1 (31)	
LM		LM-2 (32)	

DRAWING CHANGE REQD: REVISE DWG	RECORD EO	DISPOSITION OF PARTS: REWORK	SCRAP
✓		NOT	REQD

APPROVED BY	WT ALW						RMC	
DATE	3/18				3/21/67	3-20-67	3-27-67	3/23/67
1	VDI	SUPPORT	RELIAB. GROUP	GROUP LEADER	STRESS GROUP	LIAISON ENGRG	PROJ ENGRG	

PRIORITY	DRAWING TITLE	DRAWING NO.	EO NO.
C	BULKHEAD INSTL-ASCENT-MID SECT-FWD & AFT-UPPER THERMAL	LDW280-51852	A7

ISSUED BY LIAISON ART WILSON X6510 SECTION VDI GROUP NO. 335 PL 5

01

NAS 9-1100

LDW280-51861 A

MODEL OR END ITEM	NEXT ASSY	MODULE OR SER NO.	REQD PER MODULE OR END ITEM
PART NO.		GAEC SCH NO.	

MODEL OR END ITEM	NEXT ASSY	MODULE OR SER NO.	REQD PER MODULE OR END ITEM
LM	LDW280-51150	LM-2 (32)	1
PART NO. LDW280-51861-3		GAEC SCH NO. 30-	

MODEL OR END ITEM	NEXT ASSY	MODULE OR SER NO.	REQD PER MODULE OR END ITEM
LEM	LDW280-51150	LEM-1 (31)	1
PART NO. LDW280-51861-1		GAEC SCH NO. 30-	

3

SH REV STATUS: FOR DESCRIPTION OF REV SEE SUBQ SH

SHEET	1.00	1.10	2.00	3.00					
REV	A	A	A	A					
SHEET									
REV									
SHEET									
REV									

LAST SECT LTR USED	E-E	GRUMMAN REL INFO A		
		PRIM NO.	JK (001)	
LAST DASH NO. USED	-3	215	MP EH 9/21/	

UNLESS OTHERWISE SPECIFIED DIMENSIONS ARE IN INCHES.
TOLERANCE UNLESS SPECIFIED
FRACTIONS - DECIMALS - ANGLES
± 1/32 ±.020 ±1/2°

ORIG DWG AUTH	
DETAIL SPEC REQUIREMENT	
CLASS II ENGRG CHANGE	
CLASS I ENGRG CHANGE	

CONTRACT NO. NAS 9-1100 LINE ITEM #1 DOCUMENTATION TYPE II

DRAWN BY	H. DEUTSCH 9/16/66	THERMO	J. Jacomo 10/2
LAYOUT BY	J. KOSLOSKY		
CHECKED BY	AKATOLI 9-7-66		
GR. LEADER	HENTON 9-9-66		
VEH DES INT	1/11/		
STRUCTURE	9/17	PROJ ENGR	R.M. Carbee 9-17
STRUCTURE	Silocerman 9/17	REL GROUP	J Tagliavia 9/21/66
WEIGHTS	S Albanese 9/27		

GRUMMAN AIRCRAFT ENGRG CORP
BETHPAGE, L. I., NEW YORK

SHIELD INSTALLATION
ASCENT STAGE - MID SECTION
TOP THERMAL

SIZE	CODE IDENT NO.		
B	26512	LDW280-51861	A
SCALE	NONE	SHEET 1.00 OF 4	

Ⓐ

ENG 77.1 12-65

01

NAS 9-1100

REVISIONS FOR CONTINUATION OF REVISIONS SEE SHEET

CHANGE LTR	ITEM NO.	SHEET NO.	ZONE	GRUMMAN INFO ONLY	DET SPEC	CLASS I	CLASS II	ENGRG ORDER	DESCRIPTION	EFFECTIVITY	DISPOSITION OF EXISTING PARTS REWORK	DISPOSITION OF EXISTING PARTS SCRAP	CHANGED BY AND DATE	ENGRG APPD	GOVT APPD
A	1	1.00&1.10 2.00&3.00	4D 6E 8E					EO A1	IN FLD~REMOVED-DETAIL C, SECT B-B & NOTE #2~ADDED DRILL 7/16 HOLE(42). IN FLD&B/M~REMOVED, GR500D2-2(16) LDW280-14344-7(42) & LDW280P11481-15(42). ADDED~ LDW280-14344-13(42) WAS-7(42) (ADDED SH. 1.10)	LM-1 & LM-2	✓		C. D'AVELLA 8-31-67		
	2	1.10&3.00	5D				✓	EO A2	ADDED "1/32 CONSTANT" DIMENSION.						
	3	1.10, 2.00&3.00	5G				✓	EO A3	IN B/M& FLD ON-1~LDW280-28843-3 WAS LDW280-11425-19						
	4	1.00, 1.10, 2&3.	5A				✓	EO A4	DELETED LM-2(32) REQTS ON-1.~ADDED -3.	LM-2					
	5	1.10, 2.&3.	3B 3G					EO A5	ON-1&-3 INSTL~ADDED LDW280-11424-25 REMOVED-21, ADDED LDW280-11425-25 REMOVED-21.	LM-1 & LM-2					
	6	1.10						EO A6	CANCELLED BY EO A9						
	7	1.10&3.00	2H		✓			LE0280-497	ADDED NOTE 3.						
	8	1.10, 2.00 & 3.00	3C 3F 7C 7F				✓	EO A8	ON-3 INSTL~ADDED LDW280-11422-19&-21, REMOVED -15&-17~ADDED LDW280-11423-19&-21, REMOVED-15& -17~ADDED SECTION E-E, REMOVED SECTION A-A.	LM-2					
	9	1.10					✓	EO A9	CANCELED EO A6	LM-1&LM-2	NOT	REQD			
	10	1.10, 2.00 & 3.00	3H			✓		EO A10 LCD-1594	IN FLD&B/M FOR-3 INSTALLATION REMOVED LDW280 -11425-23, GB511J-06-1(4), AN960-D6L(8), MS21042L-06(4)	LM-2	✓				

CHG APPROVED LTR	GROUP LDR	VEH.DES.INT.	STRUCTURE	STRUCTURE	WEIGHTS	THERMO
A						

GRUMMAN AIRCRAFT ENGRG CORP., BETHPAGE, L. I., NEW YORK

SIZE	CODE IDENT NO.		
B	26512	LDW280-51861	A
SCALE NONE		SHEET 1.10	

ENG 77.16 3-66

01

NAS 9-1100

QTY PER ASSEMBLY -3	QTY PER ASSEMBLY -1	CODE IDENT	PART NO.	I&T	NOMENCLATURE OR DESCRIPTION	MATERIAL	GOVT SPEC	COML SPEC	STOCK SIZE	PROCESS SYM	FINISH NO.	ZONE
42	42		LDW280-14344-13	E	SCREW ASSY	SEE DWG						8E
1	1		LDW280-28843-3	▲	PANEL	▲						5G
1	1		LDW280-11425-25		▲							3G
1	1		LDW280-11425-17									7G
1	1		LDW280-11424-25									3B
1	1		LDW280-11424-19									5B
1	1		LDW280-11424-17									7B
1			LDW280-11423-21									3F
1			LDW280-11423-19									7F
	1		LDW280-11423-17									3F
	1		LDW280-11423-15									7F
1			LDW280-11422-21									3C
1			LDW280-11422-19									7C
	1		LDW280-11422-17		▼	▼						3C
	1		LDW280-11422-15		PANEL	SEE DWG						7C
			LDW280-51861-3	▼	SHIELD INSTL					NONE	NONE	5A
			LDW280-51861-1	E	SHIELD INSTL					NONE	NONE	5A

SYM OR NO.	PROCESS OR FINISH	GRUMMAN SPEC OR MILITARY SPEC	SYM OR NO.	PROCESS OR FINISH	GRUMMAN SPEC OR MILITARY SPEC	SYM OR NO.	PROCESS OR FINISH	GRUMMAN SPEC OR MILITARY SPEC

I & T: IDENTIFICATION AND TRACEABILITY IN ACCORDANCE WITH :
NONE

GRUMMAN AIRCRAFT ENGRG CORP, BETHPAGE, L. I., NEW YORK

SIZE	CODE IDENT NO.		
B	26512	LDW280-51861	A

Ⓐ

SCALE NONE SHEET 2.00

ENG 77.2 7-65

01

NAS 9-1100

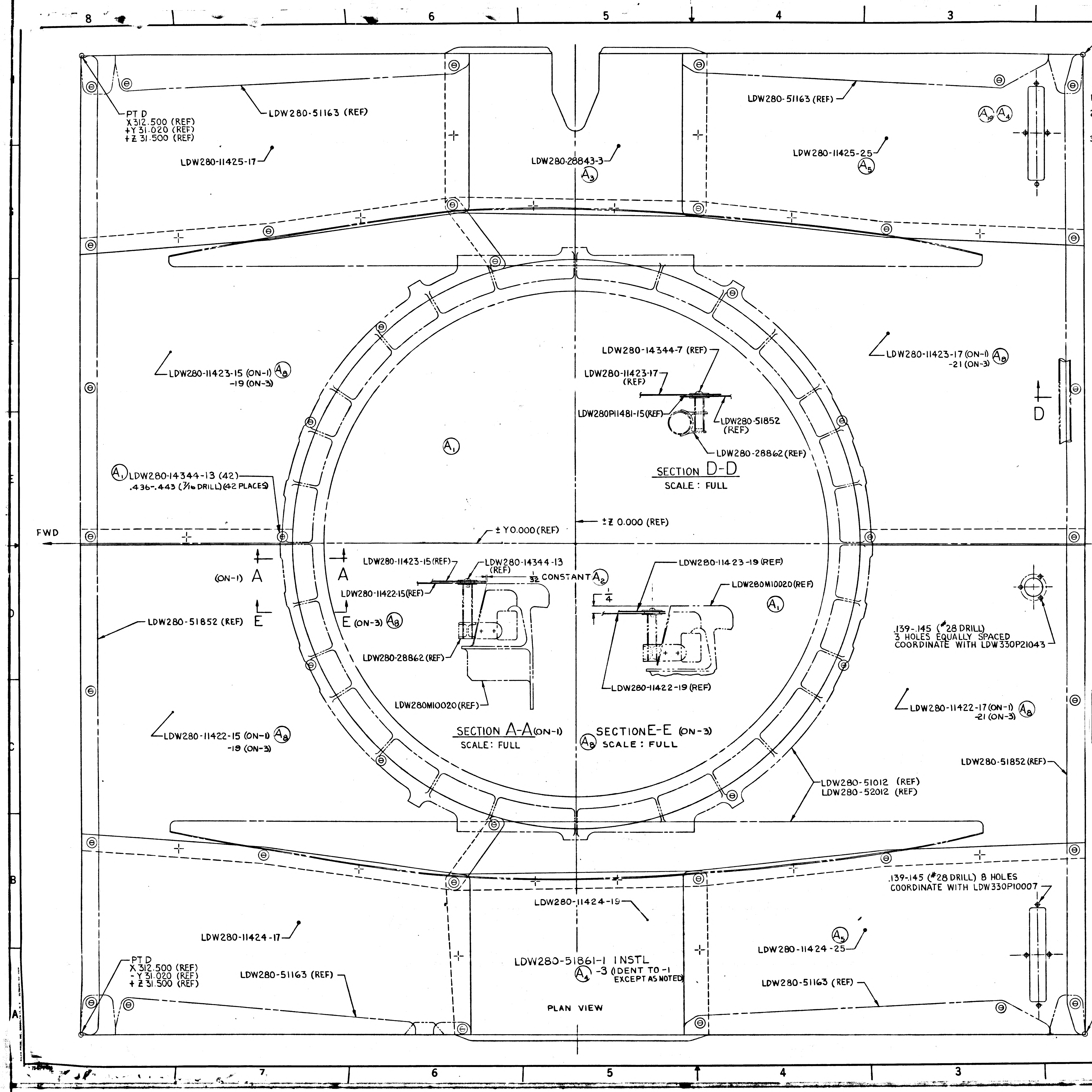
8
7
6
5
4
3
2
1
PT W
X312.500 (REF)
+Y31.020 (REF)
-Z 32.250 (REF)
PT D
X312.500 (REF)
+Y 31.020 (REF)
+Z 31.500 (REF)
LDW280-51163 (REF)
LDW280-11425-17
LDW280-28843-3
A3
LDW280-51163 (REF)
LDW280-11425-25
A5
A10
A4
LDW280-11423-15 (ON-1) A8
-19 (ON-3)
LDW280-14344-7 (REF)
LDW280-11423-17 (REF)
LDW280P11481-15(REF)
LDW280-51852 (REF)
LDW280-28862 (REF)
SECTION D-D
SCALE: FULL
LDW280-11423-17 (ON-1) A8
-21 (ON-3)
D
D
A1
A1 LDW280-14344-13 (42)
.436-.443 (7/16 DRILL) (42 PLACES)
± Z 0.000 (REF)
FWD
± Y 0.000 (REF)
LDW280-11423-15 (REF)
LDW280-14344-13 (REF)
1/32 CONSTANT A2
LDW280-11422-15 (REF)
LDW280-28862 (REF)
LDW280M10020 (REF)
(ON-1) A
A
E
E (ON-3) A8
LDW280-51852 (REF)
LDW280-11423-19 (REF)
LDW280M10020 (REF)
1/4
LDW280-11422-19 (REF)
A1
.139-.145 (#28 DRILL)
3 HOLES EQUALLY SPACED
COORDINATE WITH LDW330P21043
SECTION A-A (ON-1)
SCALE: FULL
A8 SECTION E-E (ON-3)
SCALE: FULL
LDW280-11422-15 (ON-1) A8
-19 (ON-3)
LDW280-11422-17 (ON-1) A8
-21 (ON-3)
LDW280-51852 (REF)
LDW280-51012 (REF)
LDW280-52012 (REF)
.139-.145 (#28 DRILL) 8 HOLES
COORDINATE WITH LDW330P10007
LDW280-11424-19
LDW280-11424-17
A5
LDW280-11424-25
PT D
X 312.500 (REF)
-Y 31.020 (REF)
+Z 31.500 (REF)
LDW280-51163 (REF)
LDW280-51861-1 INSTL
A4 -3 (IDENT TO -1 EXCEPT AS NOTED)
LDW280-51163 (REF)
PLAN VIEW
PT W
X 312.500 (REF)
-Y 31.020 (REF)
-Z 32.250 (REF)

NOTES:

1. INSTL. FASTENERS PER LSP-14-15302.
2. ~~BOND IN ACCORDANCE WITH LSP-14-22500 USING EPON 934 CURE RANGE I~~
3. MATERIAL, FINISHES, HANDLING AND PERMISSIBLE DEVIATIONS PER LPC-280-16.

MANUFACTURING OPERATIONS
UNLESS OTHERWISE SPECIFIED
NOTES CHECKED ✓ APPLY TO THIS DWG.

PART NUMBER
AND ALL OTHER MARKINGS
IN REGION MARKED ⊠
USE BOTH SIDES IF NECESSARY.

FILLET AND INSIDE CORNER
RADII TOLERANCES
.016R TO .062R ± .010
.063R TO .250R ± .015
OVER .250R ± .030

DEPTH SHOWN FOR TAPPED HOLES IS FULL THDS. 2-3 IMP. THDS. BEYOND PERMISSIBLE

EXTERNAL THREAD LENGTH SHOWN INCLUDES 2 IMPERFECT THREADS MAX.

DO NOT CADMIUM PLATE & PAINT HOLES OR SURFACES MARKED WITH DOUBLE ASTERISK.

MISMATCH STEP OF ± .005 PERMISSIBLE DUE TO CHANGE OF CUTTERS AT INSIDE INTERSECTING SURFACES.

DIAMETERS MARKED MUST BE CONCENTRIC WITHIN FULL INDICATOR READING

HOLES MUST BE KEPT FREE OF CHROME PLATING SOLUTION.

ALL DIMENSIONS SHOWN TO BE MET AFTER CADMIUM PLATING. THICKNESS OF PLATE .0003 MIN TO .0005 MAX. MIN THICKNESS TO BE .0002 ON THREADED AREAS. NO ALLOWANCES FOR PLATING IN HOLES

125 √ SURFACE ROUGHNESS INCLUDING REAMED HOLES PER MIL-STD-10

200 √ FOR ALL DRILLED HOLES

REMOVE ALL BURRS.
BREAK ALL EDGES .015-.031

INSPECTION INFORMATION
MINIMUM PERMISSIBLE
[redacted] EDGE DISTANCE
[redacted] IS 1 1/2 FASTENER DIA FROM FASTENER ℄ ✓

SYMBOL √ DENOTES SURFACE TO BE MACHINED

UNLESS OTHERWISE SPECIFIED TOLERANCE ON FLANGES IS ± 1/32

LENGTHS OF AN, NAS & MS AL ALY RIVETS SHORTER THAN 1 INCH ARE NOT SPECIFIED

TOLERANCE ON LOFTED DELINEATIONS IS

01 NAS 9-1100

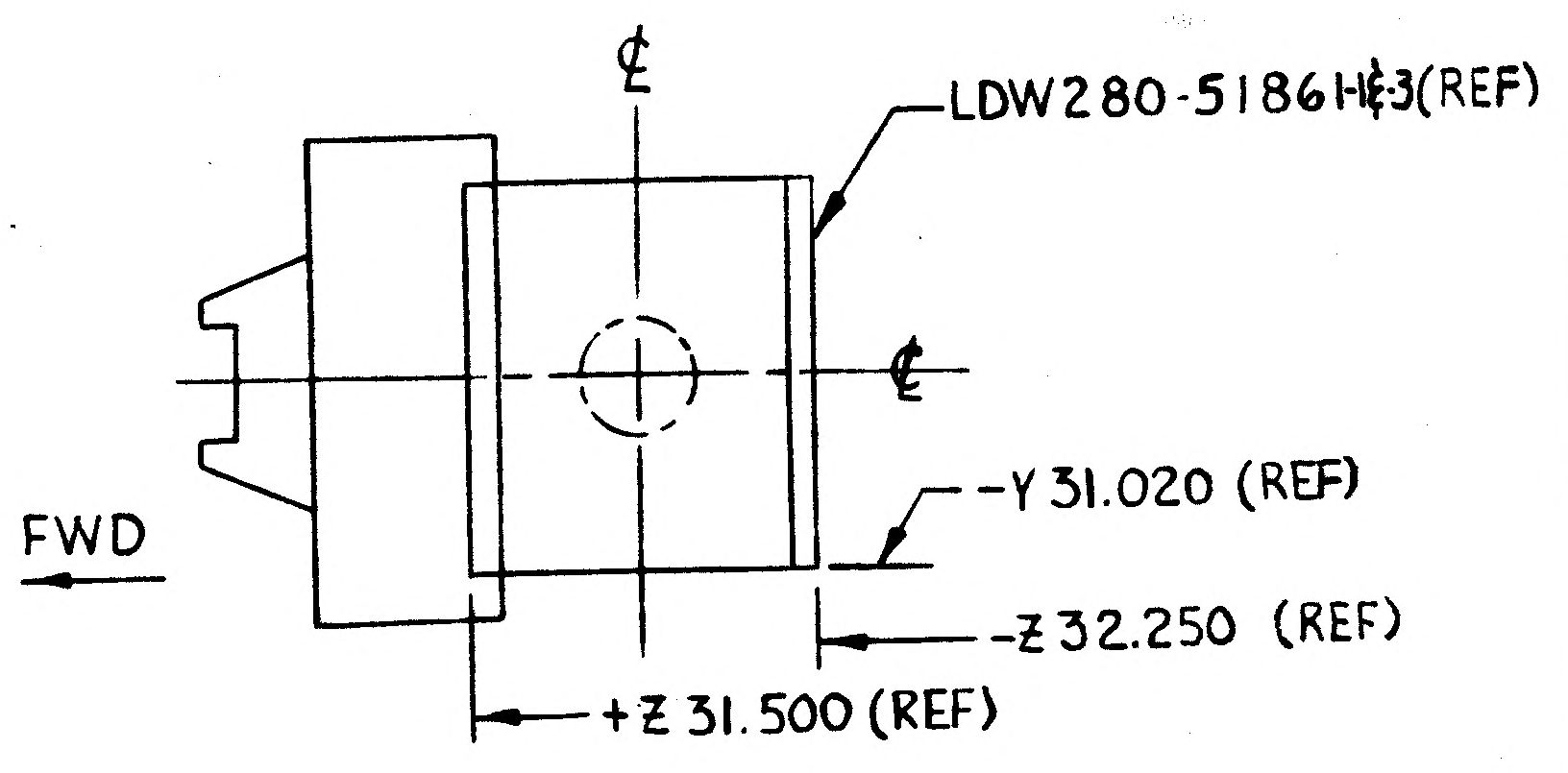
℄
LDW280-51861-3 (REF)
℄
FWD
-Y 31.020 (REF)
-Z 32.250 (REF)
+Z 31.500 (REF)

FOR ENGINEERING REF ONLY
NO SCALE

	GRUMMAN AIRCRAFT ENGRG CORP, BETHPAGE, L. I., NEW YORK			
	SIZE E	CODE IDENT NO. 26512	LDW280-51861	
LEM MODEL OR END ITEM	SCALE HALF	& NOTED		SHEET 3

ENG 32.1 REV 3-65

GRUMMAN AIRCRAFT ENGINEERING CORP.

CODE IDENT NO. 26512

ENGINEERING ORDER

DWG LDW280-51861	EO NO. A1
CONTROL INFO NO. LDW 280A-2138	

IN FLD - REMOVE-DETAIL C, SECT. B-B & NOTE #2

IN FLD & BM - REMOVE LDW280-14344-7(42) LDW280P11481-15(42), GR500D2-2(18)

ADD LDW280-14344-13(42) WAS -7(42)

IN FLD -

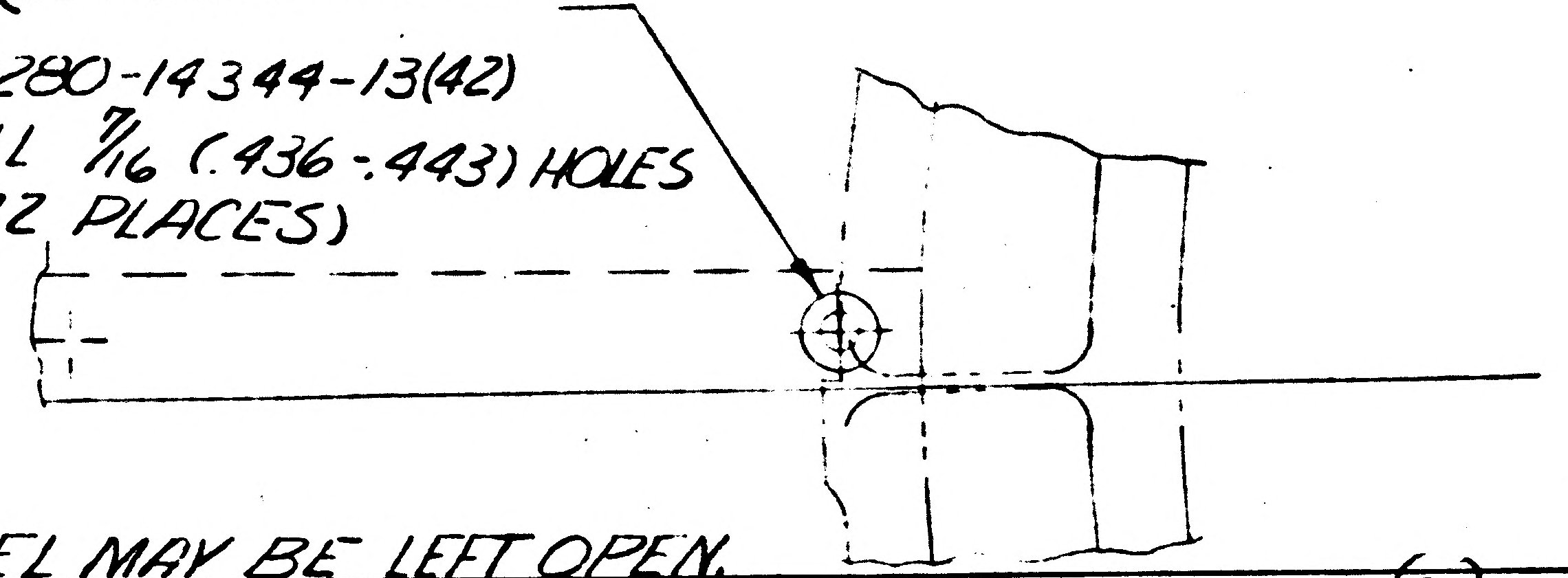

WAS {LDW280-14344-7(42)
LDW280P-11481-15(42)

ADD {LDW280-14344-13(42)
DRILL 7/16 (.436-.443) HOLES
(42 PLACES)

NOTE: RVT HOLES IN LOWER PANEL MAY BE LEFT OPEN.

DETAIL SPEC REQ		CL II ENGRG CHG		CL I ENGRG CHG	

REASON FOR EO		GAEC & EO RELEASE	
REMOVE PARTS NO LONGER REQD. DUE TO DIMPLING	IN FLD - REMOVED - DETAIL C SECT B-B & NOTE #2 - ADDED DRILL 7/16 HOLE(42) IN FLD & BM - REMOVED - GR500D2-2(18) LDW280-14344-7(42) & LDW280 P11481-15(42). ADDED - LDW280-14344-13(42) WAS -7(42) ② (3)	LE	10/28

MODEL	EFFECTIVITY: PROCURING ACTIVITY NO.	GAEC UNIT NO	SUB CONTR UNIT NO
LM	LM2(32)		
LM	LM1(31)		

DRAWING CHANGE REQD: REVISE DWG	RECORD EO	DISPOSITION OF PARTS: REWORK	SCRAP									
✓		✓		APPROVED BY		VJD		H. B.			RMK WR	
				DATE	10/27/66	10/26/66		10/27	10/27		10/27/66	10/27/66
				5	✓ VDI	~~SUPPORT~~ THERM	RELIAB GROUP	GROUP LEADER	STRESS GROUP	LIAISON ENGRG	PROJ ENGRG	~~GOVT~~

PRIORITY	DRAWING TITLE	DRAWING	EO NO.
C	SHIELD INSTALLATION A/S~M/S~TOP THERMAL	LDW280-51861	A1

ISSUED BY H FORSCH X 1153 SECTION VDI GROUP NO. 335 PL 35

01 NAS 9-1100

ENG 321 REV 3-65

GRUMMAN AIRCRAFT ENGINEERING CORP.
CODE IDENT NO. 26512
ENGINEERING ORDER

DWG. NO. LDW280-51861
EO NO. Av
CONTROL INFO NO. LDW280A-3212

IN F/D ON -1

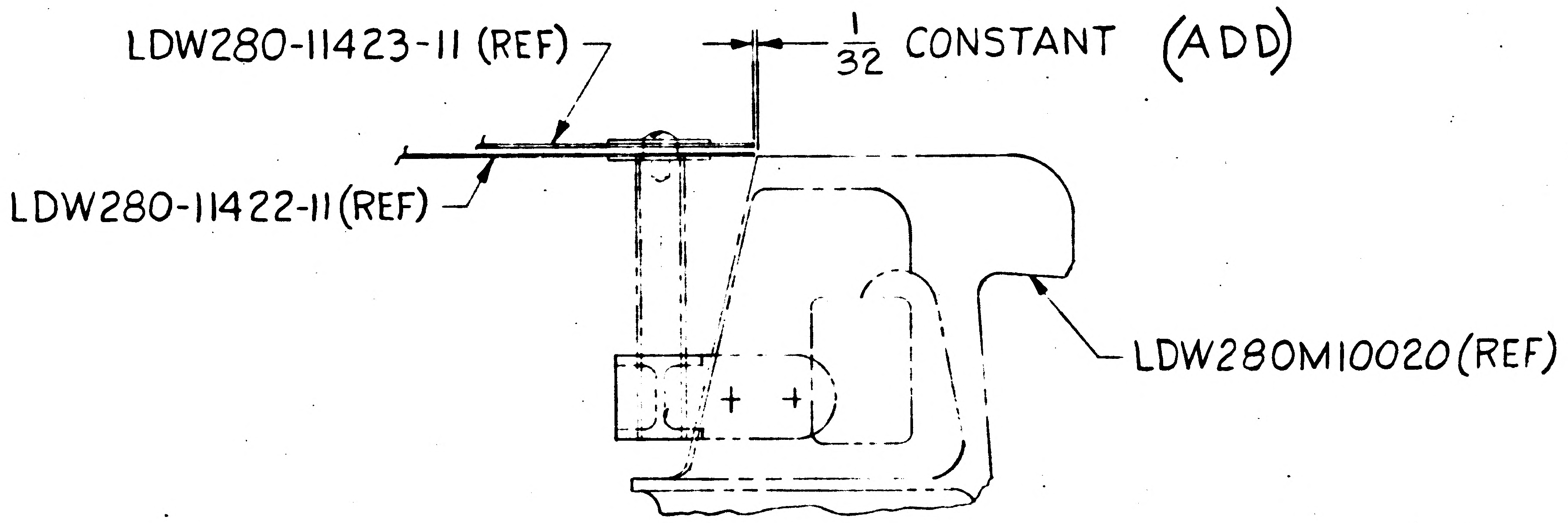

DETAIL SPEC REQ		CL II ENGRG CHG	✓	CL I ENGRG CHG		3

REASON FOR EO: TO LIMIT HEAT TRANSFER BETWEEN SKIN & MAIN STRUCTURE

DESCRIPTION OF EO: ADDED 1/32 CONSTANT DIMENSION

GAEC EO RELEASE: FR 11/23/6

MODEL	PROCURING ACTIVITY NO.	GAEC UNIT NO	SUB CONTR UNIT NO
LM		LM-1 & LM-2 (31) (32)	

DRAWING CHANGE REQD: REVISE DWG ✓ RECORD EO

DISPOSITION OF PARTS: REWORK ✓ SCRAP

APPROVED BY							RMC③	
DATE	11/10/66	11/11/66		11/10	11/14		11-14-66	11-22-66
#5	VDI	~~SUPPORT~~ THERMO	RELIAB GROUP	GROUP LEADER	STRESS GROUP	LIAISON ENGRG	PROJ ENGRG	~~GOVT.~~

PRIORITY: C
DRAWING TITLE: SHIELD INSTALLATION A/S, M/S TOP THERMAL
DRAWING NO. LDW280-51861
EO NO. Av

ISSUED BY J. KOSLOSKY x 1441 SECTION V.D.I. GROUP NO. 335 PL 35

01 NAS 9-1100

ENG 32.1 REV 3-65

*

GRUMMAN AIRCRAFT ENGINEERING CORP.
CODE IDENT NO. 26512

ENGINEERING ORDER

DWG. NO. LDW280-51861
EO NO. A3
CONTROL INFO NO. LDW280A 3389

IN B/M & F/D ON -1 INSTL:

LDW280-28843-3

WAS

LDW280-11425-19

3

DETAIL SPEC REQ	☐	CL II ENGRG CHG	☑	CL I ENGRG CHG	☐

REASON FOR EO
CORRECTED B/M TO MATCH N/A OF PART

DESCRIPTION OF EO
IN B/M & F/D ON -1
LDW280-28843-3 WAS LDW280-11425-19

GAEC C EO RELEASE
C 11/30

MODEL	EFFECTIVITY PROCURING ACTIVITY NO.	GAEC UNIT NO.	SUB CONTR UNIT NO.
LM		LM-1 (31)	
LM		LM-2 (32)	

DRAWING CHANGE REQD: REVISE DWG ✓ RECORD EO
DISPOSITION OF PARTS: REWORK ✓ SCRAP

APPROVED BY		V.J.L						RWC
DATE	11/19/66	11/22		11/16	11/22		11-23-66	11/30
#6	VDI	~~SUPPORT~~ THERM	RELIAB. GROUP	GROUP LEADER	STRESS GROUP	LIAISON ENGRG	PROJ ENGRG	~~CHIEF~~

PRIORITY C
DRAWING TITLE SHIELD INSTL A/S M/S TOP THERMAL
DRAWING NO. LDW280-51861
EO NO. A3

ISSUED BY M. SHAPIRO X1153
SECTION VD1
GROUP NO. 335 PL 35

01 NAS 9-1100

ENG 32.1 REV 3-66

GRUMMAN AIRCRAFT ENGINEERING CORP.
CODE IDENT NO. 26512
ENGINEERING ORDER

DWG. NO. LDW280-51861	EO NO. A4
CONTROL INFO NO. LDW280-A-4259	

ADD - AN 960-D6L(8) UNDER NUT & BOLT
MS21042 L-06(4)
GB511J-06-1(4) (COORDINATE
PILOT HOLES WITH EXISTING HOLES IN SKIN)
ADD LDW280-11425 23 (AS SHN.)
LDW280-51861-3 IDENTICAL TO
-1 EXCEPT ~~AS~~ NOTED

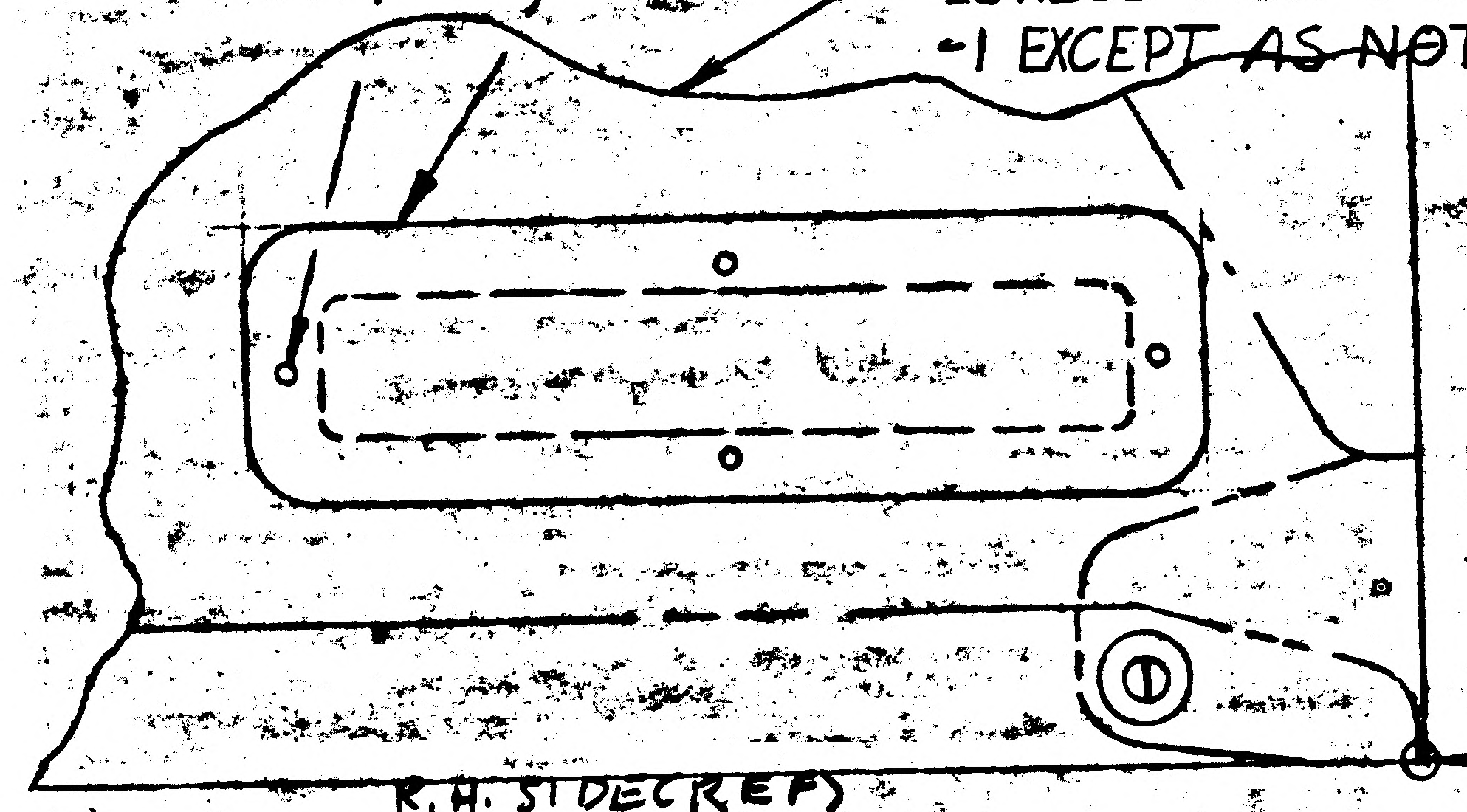

PT. W X 312.500 (REF)
+Y 31.020 (REF) -Z 32.250 (REF)
R.H. SIDE (REF)
ADD DETAIL ✱ FOR -3

IN B/M & F/D ON -3
ADD LDW280-11425-23 (1 REQ'D)
AN 960-D6L(8), MS21042 L-06(4)
GB511J-06-1 (4) ON -3

IN F/D & M/B
DELETE - LM 2 (32) REQTS ON
LDW280-51861-1
ADD - LDW280-51861-3 IDENT. TO
-1 EXCEPT AS NOTED - EFF. LM2(32)

DETAIL SPEC REQ ☐ CL II ENGRG CHG ☑ CL I ENGRG CHG ☐

REASON FOR EO: DELETION OF WATER BOILER

DESCRIPTION: DELETED LM 2(32) REQTS ON -1, ADDED -3.

ⓔ GAEC C EO RELEASE

MODEL	EFFECTIVITY PROCURING ACTIVITY NO.	EFFECTIVITY GAEC UNIT NO.	EFFECTIVITY SUB CONTR UNIT NO.
LM		LM 2 (32)	

DRAWING CHANGE REQD: REVISE DWG ☑ RECORD EO ☐
DISPOSITION OF PARTS: REWORK ☑ SCRAP ☐

APPROVED BY								
DATE 12/10/66				12/10/66			12-13-66	12-13-66
1	VD1	SUPPORT	RELIAB. GROUP	GROUP LEADER	STRESS GROUP	LIAISON ENGRG	PROJ ENGRG	GOVT

PRIORITY: C
DRAWING TITLE: SHIELD INSTALLATION - ASCENT STAGE MID SECTION - THERMAL
DRAWING NO.: LDW280-51861
EO NO.: A4

ISSUED BY: H FORSCH X 1153
SECTION: V.D.I.
GROUP NO. 335
PL 35

01 NAS 9-1100

B

ENG 32.1 REV 3-65

GRUMMAN AIRCRAFT ENGINEERING CORP.
CODE IDENT NO. 26512
ENGINEERING ORDER

DWG. NO. LDW280-51861
EO NO. A5
CONTROL INFO NO. LM-5-11700

ON -1 & -3 INSTL.:

LDW280-11424-25 REPLACES LDW280-11424-21

LDW280-11425-25 REPLACES LDW280-11425-21

RELEASED BY LIAISON

DETAIL SPEC REQ		CL II ENGRG CHG		CL I ENGRG CHG	

REASON FOR EO	DESCRIPTION OF EO	✓ GAEC C 3 EO RELEASE
NEW PART REQD TO PROVIDE PROPER EDGE DISTANCE	ON-1 & -3 INSTL ADDED LDW280-11424-25 REMOVED -21 ADDED LDW280-11425-25 REMOVED -21	FR

MODEL	EFFECTIVITY		
	PROCURING ACTIVITY NO.	GAEC UNIT NO.	SUB CONTR UNIT NO.
LM		LM-1 (31)	
		LM-2 (32)	

DRAWING CHANGE REQD		DISPOSITION OF PARTS	
✓		✓	
REVISE DWG	RECORD EO	REWORK	SCRAP

APPROVED BY	WT			~	ag.	CR	RMC (EW)	
DATE	1/23/67			~	1-23-67	1-23-67	1-27-67	1/23/67
/	VDI	SUPPORT	RELIAB. GROUP	GROUP LEADER	STRESS GROUP	LIAISON ENGRG	PROJ ENGRG	~~CUST~~

PRIORITY	DRAWING TITLE	DRAWING NO.	EO NO.
C	SHIELD INSTL A/S ~ M/S ~ THERMAL	LDW280-51861	A5

ISSUED BY Lou Riedell x-5610 1-23-67 SECTION VDI GROUP NO. 335 PL-5

01

NAS 9-1100

ENG 32.1 REV 3-65

GRUMMAN AIRCRAFT ENGINEERING CORP.
CODE IDENT NO. 26512
ENGINEERING ORDER

DWG. NO. LDW280-51861
EO NO. A6
CONTROL INFO NO. LM-5-12258

-1 INSTL. & -3 INSTL

IN B/M & F/D CHANGE GR500D2-2 (18) TO MS20470B3(18).

RELEASED BY LIAISON

DETAIL SPEC REQ	☐	CL II ENGRG CHG	☐	CL I ENGRG CHG	☐	5

REASON FOR EO: GR500D2-2 HARDWARE IS NOT AVAILABLE

DESCRIPTION OF EO: ON -1 & 3 INSTL, IN B/M & F/D MS20470B3(18) WAS GR500D2-2 (18).

GAEC EO RELEASE: C

MODEL	PROCURING ACTIVITY NO.	GAEC UNIT NO.	SUB CONTR UNIT NO.
LM		LM-1(31)	
		LM-2(32)	

DRAWING CHANGE REQD		DISPOSITION OF PARTS	
✓		✓	
REVISE DWG	RECORD EO	REWORK	SCRAP

APPROVED BY	M			–	RH	CH	RMC(E)	
DATE	1/20			–	1-31-67	1-31-67	2-3-67	1/31/67
1	VDI	SUPPORT	RELIAB. GROUP	GROUP LEADER	STRESS GROUP	LIAISON ENGRG	PROJ ENGRG	~~GOVT~~

PRIORITY	DRAWING TITLE	DRAWING NO.	EO NO.
C	SHIELD INSTL. A/S - M/S - TOP THERMAL	LDW280-51861	A6

ISSUED BY LIAISON - J. McGILL X-6226 SECTION VDI GROUP NO.______ PL 35

01 NAS 9-1100

ENG 322 REV 3 65

B

GRUMMAN AIRCRAFT ENGINEERING CORP.
CODE IDENT NO. 26512
ENGINEERING ORDER

DWG NO. LEO-280
EO NO. 497
CONTROL INFO NO. LDW 280A-5768

(ADD) NOTE, "*. MATERIAL, FINISHES, HANDLING AND PERMISSIBLE DEVIATIONS PER LPC-280-16", TO THE FOLLOWING DRAWINGS:

DRAWING NUMBER	TITLE	EFFECTIVITY	CHANGE NUMBER
\LDW280-11444	SEE DWG.	LTA-8(18)	A9
\LDW280-28160	↑	↑	A8
\LDW280-28161			B1
\LDW280-28163			A5
\LDW280-28851			A7
\LDW280-28852		↓	A5
\LDW280-28861		LTA-8(18)	A5
\LDW280-11524		LM-1(31), LM-2(32)	A6
\LDW280-51160		↑	A7
\LDW280-51161			A8
\LDW280-51163			A3
\LDW280-51851		↓	A5
LDW280-51852			A6
LDW280-51861		LM-1(31), LM-2(32)	A7
LDW280-11422		LTA-8(18), LM-1(31), LM-2(32)	A2
LDW280-11423		↑	A2
LDW280-11424			A4
LDW280-11425			B1
LDW280-11426			B5
LDW280-11427			B5
LDW280-11428			B5
LDW280-11429			B7
LDW280-11430			A6
LDW280-11431	↓	↓	B3
LDW280-11432	SEE DWG.	LTA-8(18), LM-1(31), LM-2(32)	B3

NOTE:
* = USE NEXT AVAILABLE №.

DETAIL SPEC REQ ☑ CL II ENGRG CHG ☐ CL I ENGRG CHG ☐

3

REASON FOR EO: LPC'S OMITTED ON DWG.

DESCRIPTION OF EO: ADDED NOTE *

GAEC EO RELEASE: C VK 3/8/67

MODEL	PROCURING ACTIVITY NO.	GAEC UNIT NO.	SUB CONTR UNIT NO.
LM		NOTED	

DRAWING CHANGE REQD: REVISE DWG ✓ RECORD EO
DISPOSITION OF PARTS: REWORK ✓ SCRAP

				RELIAB. GROUP	GROUP LEADER	STRESS GROUP	LIAISON ENGRG	PROJ ENGRG	
APPROVED BY	JaP				F.LOR	88		Dam	JPL
DATE	3/2/67				3/2/67	3/3/67		3/6/67	3/7/67
	1	VDI	THERMO						

PRIORITY: C
DRAWING TITLE: NOTED
DRAWING NO.: LEO-280
EO NO.: 497

ISSUED BY W. PAILK SECTION VEH. DES. INT. GROUP NO. 335 PI 35

01
NAS 9-1100

ENG 32.1 REV 3-65 P

GRUMMAN AIRCRAFT ENGINEERING CORP.
CODE IDENT NO. 26512
ENGINEERING ORDER *

DWG. NO. LDW 280-51861 | EO NO. A8
CONTROL INFO NO. LM 5-13194

ON -3 IN F/D & B/M

LDW 280-11422-19 & -21 REPLACES LDW 280-11422-15 & -17
LDW 280-11423-19 & -21 REPLACES LDW 280-11423-15 & -17
SECTION *-* REPLACES SECTION A-A

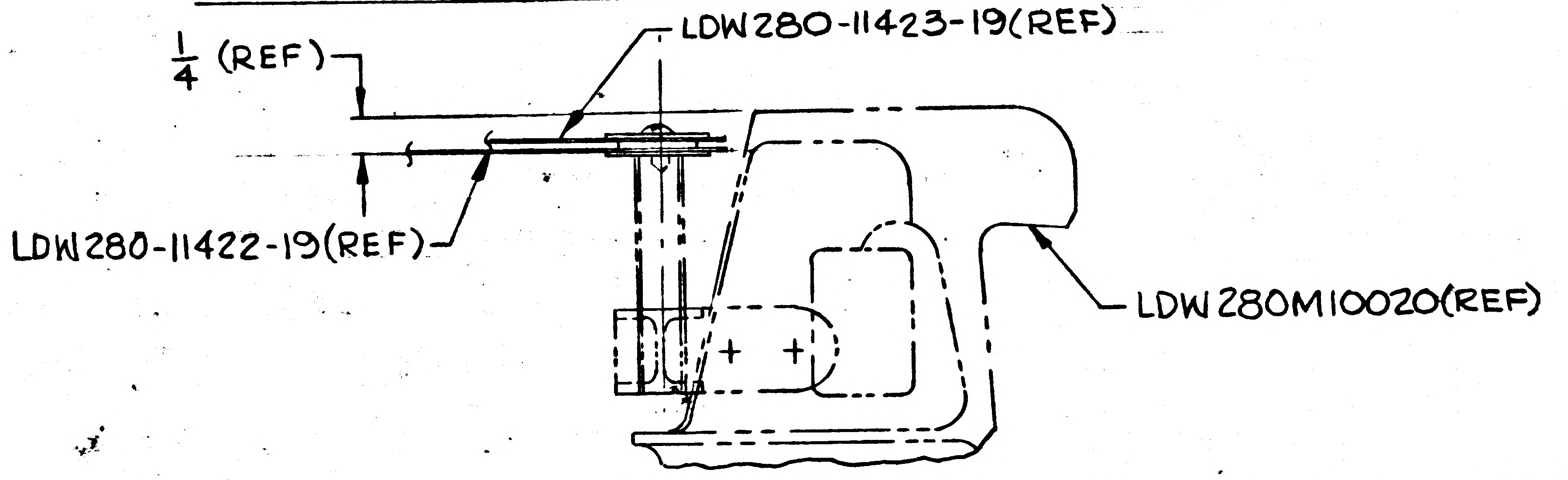

SECTION **

RELEASED BY LIAISON

DETAIL SPEC REQ ☐ | CL II ENGRG CHG ☑ | CL I ENGRG CHG ☐

REASON FOR EO: DROPPED TOP SHIELD 1/4" TO CLEAR NORTH AMERICAN DOCKING STRUCT.

DESCRIPTION OF EO:
ON -3 INSTL
ADDED LDW280-11422-19 & -21, REMOVED -15 & -17
ADDED LDW280-11423-19 & -21, REMOVED -15 & -17
ADDED SECTION *-*, REMOVED SECTION A-A

GAEC EO RELEASE: VK 5 C

MODEL	PROCURING ACTIVITY NO.	GAEC UNIT NO.	SUB CONTR UNIT NO.
LM		LM-2 (32)	

DRAWING CHANGE REQD: REVISE DWG ✓ | RECORD EO
DISPOSITION OF PARTS: REWORK ✓ | SCRAP

APPROVED BY	WT	V??		~		CH	DAM (EJ)	
DATE	4/17/67	4/17		~	4-24-67	4/18	4-26-67	4/24/67
1	VDI	~~SUPPORT~~	RELIAB. GROUP	GROUP LEADER	STRESS GROUP	LIAISON ENGRG	PROJ ENGRG	~~CUST~~

PRIORITY: C
DRAWING TITLE: SHIELD INSTALLATION ~ ASCENT STAGE MID-SECTION ~ TOP THERMAL
DRAWING NO. LDW 280-51861
EO NO. A8

ISSUED BY W. TRAUT x6510 SECTION VDI GROUP NO. 335 PL 5

01 NAS 9-1100

ENG 32.1 REV 3-65

B

GRUMMAN AIRCRAFT ENGINEERING CORP.

CODE IDENT NO. 26512

ENGINEERING ORDER

DWG NO. LDW280-51861

EO NO. A9

CONTROL INFO NO. LM 5-15215

CANCEL E.O. A6

RELEASED BY LIAISON

DETAIL SPEC REQ		CL II ENGRG CHG	✓	CL I ENGRG CHG	

3

REASON FOR EO: NEED FOR RIVETS WAS ELIMENATED (SEE E.O. A1)

DESCRIPTION OF EO: CANCELED EO A6

GAEC EO RELEASE: JK

MODEL	EFFECTIVITY		
	PROCURING ACTIVITY NO.	GAEC UNIT NO.	SUB CONTR UNIT NO.
LM		LM-1 (31)	
		LM-2 (32)	

DRAWING CHANGE REQD		DISPOSITION OF PARTS	
REVISE DWG	RECORD EO	REWORK	SCRAP
✓		NOT REQD	

APPROVED BY	7.NL			~	MBS	EWB	DAM	
DATE	6/2/67			~	5/30/67	5/29/67	6-2-67	6/1/67
1	VDI	SUPPORT	RELIAB. GROUP	GROUP LEADER	STRESS GROUP	LIAISON ENGRG	PROJ ENGRG	GOVT

PRIORITY	DRAWING TITLE	DRAWING NO.	EO NO.
C	SHIELD INSTALLATION A/S-M/S ~ TOP THERMAL	LDW280-51861	A9

ISSUED BY LIAISON J. PAULSEN X6216 SECTION V.D.I. GROUP NO. 335 PL 3

01

NAS 9-1100

ENG 32.1 REV 3-65

GRUMMAN AIRCRAFT ENGINEERING CORP.
CODE IDENT NO. 26512
ENGINEERING ORDER

DWG. NO. LDW280-51861
EO NO. A10
CONTROL INFO NO. LDW280A8199

DESCRIPTION OF EO:
IN F/D & B/M FOR -3 INSTALLATION:

REMOVED LDW280-11425-23
GB511J-06-1 (4)
AN960-D6L (8)
MS21042L-06 (4)

DETAIL SPEC REQ ☐ CL II ENGRG CHG ☐ CL I ENGRG CHG ✓ LCD1594. 5

REASON FOR EO: TO ADD PROVISIONS FOR FREON COOLING CAPACITY (PRE-LAUNCH, ECS)

DESCRIPTION OF EO: NOTED

Ⓡ GAEC EO RELEASE: C JK 7/31/67

MODEL	EFFECTIVITY: PROCURING ACTIVITY NO.	EFFECTIVITY: GAEC UNIT NO.	EFFECTIVITY: SUB CONTR UNIT NO.
LM		LM-2 (32)	

DRAWING CHANGE REQD: REVISE DWG ✓ RECORD EO
DISPOSITION OF PARTS: REWORK -3 SCRAP

	VDI	SUPPORT	RELIAB GROUP	GROUP LEADER	STRESS GROUP	LIAISON ENGRG	PROJ ENGRG	
APPROVED BY	JaP			JDRe				AC
DATE	7/27			7-27-67	7/27/67		7/29/67	7-29-67

PRIORITY: C
DRAWING TITLE: SHIELD INSTALLATION: A/S, M/S, TOP THERMAL
DRAWING NO.: LDW280-51861
EO NO.: A10

ISSUED BY F. BADE X7033 SECTION VEH. DES. INT. GROUP NO. 335 PL 25

01

NAS 9-1100

ENG 32.1 REV 3-65

GRUMMAN AIRCRAFT ENGINEERING CORP.
CODE IDENT NO. 26512
ENGINEERING ORDER

DWG. NO. LDW280-51861
EO NO. B1
CONTROL INFO NO. LDW280B0106

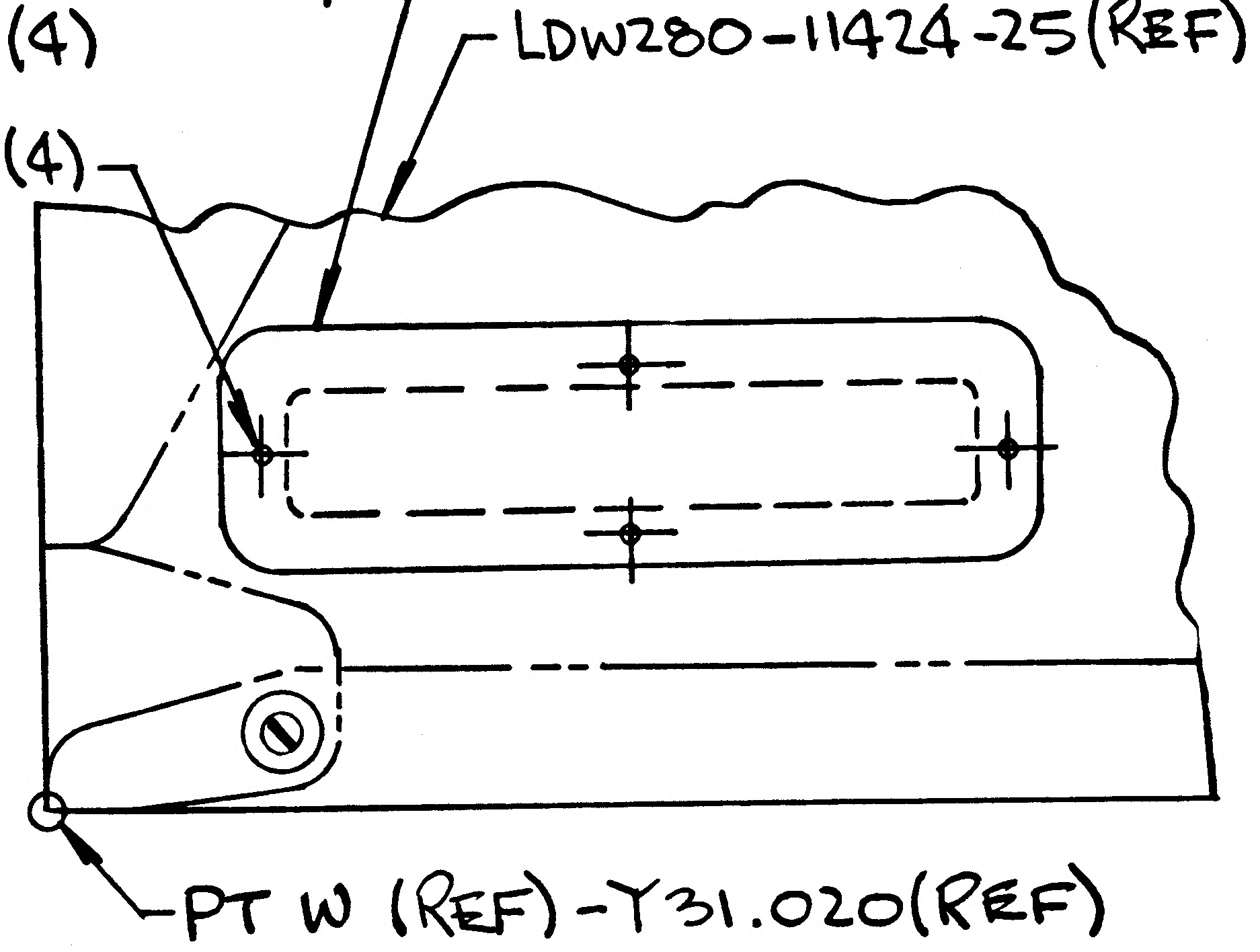
(ADD) .139-.145(#28 DRILL)
4 HOLES (PICK UP
EXISTING HOLE LOCATION)
GB511J-06-1 (4)
AN960D6L (8)
MS21042L-06(4)
(ON-3)
(ADD)
LDW280-11425-23(ON-3)
LDW280-11424-25(REF)
-3 INSTL (REF)
PLAN VIEW(REF)
PT W (REF)-Y31.020(REF)

ADD LDW280-11425-23 TO
-3 INSTL AS SHOWN

DETAIL SPEC REQ	☐	CL II ENGRG CHG	☐	CL I ENGRG CHG	✓ LCD2223 CCA 745 (5)

REASON FOR EO: COVER REQD IN SHIELD DUE TO REMOVAL OF DUCTING

DESCRIPTION OF EO: TO-3 INSTL ADDED LDW280-11425-23, GB511J -06-1(4), AN960D6L (8) & MS21042L-06(4)

GAEC EO RELEASE: JK 11/7/7

MODEL	PROCURING ACTIVITY NO.	GAEC UNIT NO.	SUB CONTR UNIT NO.
LM		LM-2(32)	

DRAWING CHANGE REQD		DISPOSITION OF PARTS	
REVISE DWG	RECORD EO	REWORK	SCRAP
✓		✓	

APPROVED BY			RELIAB. GROUP	GROUP LEADER	STRESS GROUP	LIAISON ENGRG	PROJ ENGRG	
DATE	11/2/67			11-2-67	11/3/67		11/3/67	11-6-67
S	VDI						WRB	

PRIORITY	DRAWING TITLE	DRAWING NO.	EO NO.
C	SHIELD INSTL ~ ASCENT STAGE MID SECT ~ TOP THERMAL	LDW280-51861	B1

11/6
ISSUED BY ART WILSON X7033 11/2/67 SECTION VDI GROUP NO. 335 PL 25

01 NAS 9-1100

LDW280-51870

MODEL OR END ITEM	NEXT ASSY	MODULE OR SER NO.	REQD PER MODULE OR END ITEM
LEM	LDW280-51396	LEM-1(31)	1
PART NO. LDW280-51870-1		GAEC SCH NO. 30-SH-1	

5

SH REV STATUS: FOR DESCRIPTION OF REV SEE SUBQ SH

SHEET	1.00		2.00	3.00						
REV										
SHEET										
REV										
SHEET										
REV										

LAST SECT LTR USED	
LAST DASH NO. USED	-1

GRUMMAN REF INFO

PRIM NO.	LE(001)		
215	MP-8-29-6		

UNLESS OTHERWISE SPECIFIED DIMENSIONS ARE IN INCHES.
TOLERANCE UNLESS SPECIFIED FRACTIONS - DECIMALS – ANGLES
± 1/32 ± .020 ± 1/2°

ORIG DWG AUTH
DETAIL SPEC REQUIREMENT
CLASS II ENGRG CHANGE
CLASS I ENGRG CHANGE

CONTRACT NO. NAS9-1100
LINE ITEM 1
DOCUMENTATION TYPE II

DRAWN BY	LUNDSTEN 8/13/66		
LAYOUT BY	SHANLEY		
CHECKED BY	Kartzman 8-17-66		
GR. LEADER	J. Pusateri 8/23/66		
VEH DES INT	8/25		
STRUCTURES	8/[illegible]	PROJ ENGR	R.M. Carbee (E) 8/29
STRUCTURES	Hildeman 8/26	REL. GROUP	B.H. 9-10-66
WEIGHTS			

GRUMMAN AIRCRAFT ENGRG CORP
BETHPAGE, L. I., NEW YORK

COLLAR ASSEMBLY
ASCENT STAGE ~ CABIN ~
IMU BEAM ~ STAR TRACKER

SIZE B
CODE IDENT NO. 26512
LDW280-51870
SCALE NONE
SHEET 1.00 OF 3

CRD 8-27-66

ENG 77.1 12-65

01

NAS 9-1100

QTY PER ASSEMBLY -1	CODE IDENT	PART NO.	I&T	NOMENCLATURE OR DESCRIPTION	MATERIAL	GOVT SPEC	COML SPEC	STOCK SIZE	PROCESS SYM	FINISH NO.	ZONE
		NAS1097AD3	E	RIVET	STD PART						
		MS20470AD4	E	RIVET	STD PART						
1		LDW280-11185-24	E	CLIP	SEE DWG						
1		LDW280-11185-23	E	CLIP	SEE DWG						
1		LDW280-11185-21	E	RING	SEE DWG						
1		LDW280-11185-11	E	COLLAR	SEE DWG						
		LDW280-51870-1	E	COLLAR ASSY					NONE	NONE	

SYM OR NO.	PROCESS OR FINISH	GRUMMAN SPEC OR MILITARY SPEC	SYM OR NO.	PROCESS OR FINISH	GRUMMAN SPEC OR MILITARY SPEC	SYM OR NO.	PROCESS OR FINISH	GRUMMAN SPEC OR MILITARY SPEC

I & T: IDENTIFICATION AND TRACEABILITY IN ACCORDANCE WITH : NONE

GRUMMAN AIRCRAFT ENGRG CORP, BETHPAGE, L. I., NEW YORK

SIZE	CODE IDENT NO.	
B	26512	LDW280-51870

SCALE NONE

SHEET 2.00

ENG 77.2 7-65

01

NAS 9-1100

NOTES:

1. ABBREVIATIONS ARE PER MIL STD 12, EXCEPT AS FOLLOWS: IMU = INERTIAL MEASURING UNIT.

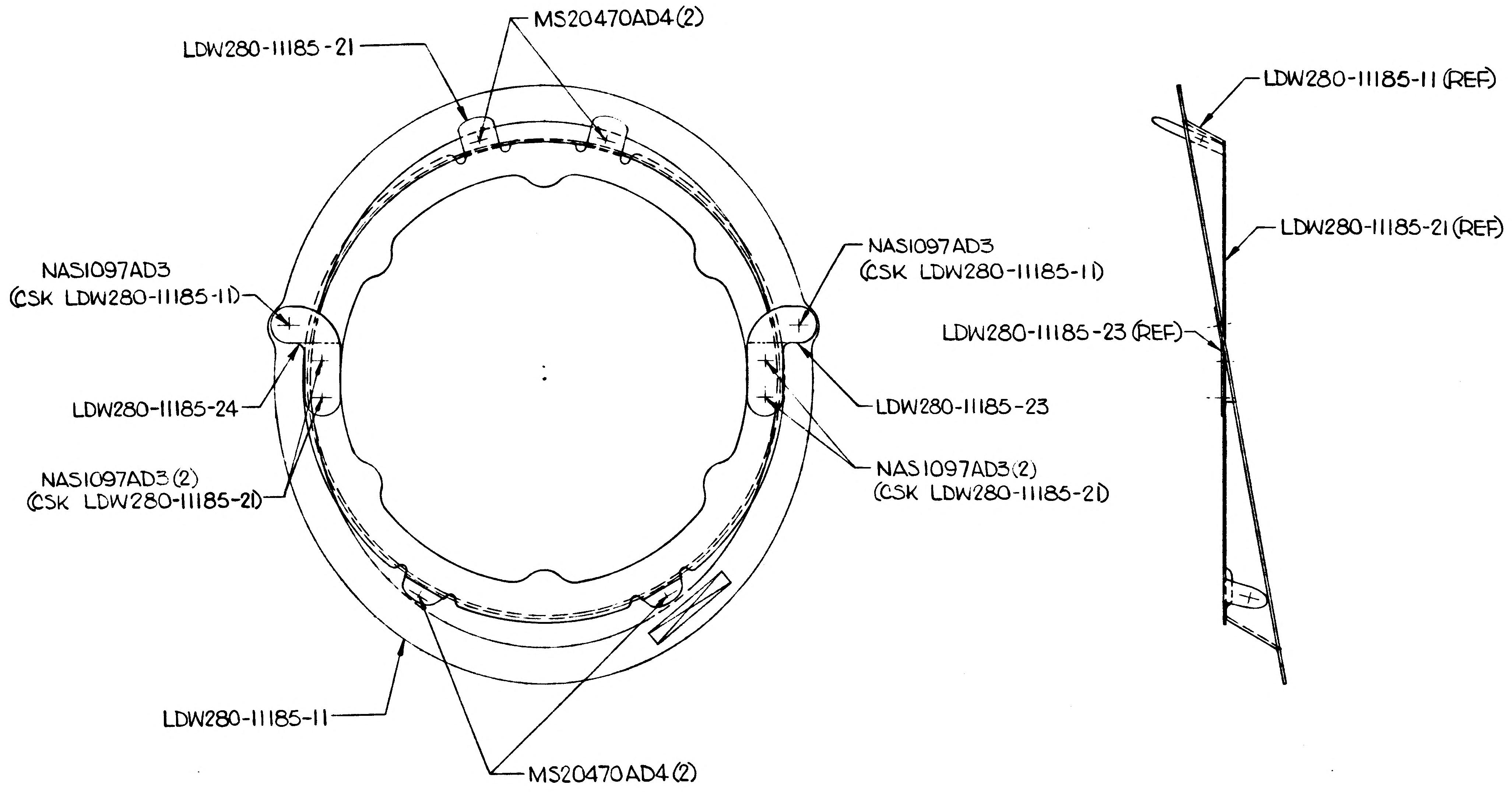

LDW280-11185-21
MS20470AD4 (2)
NAS1097AD3
(CSK LDW280-11185-11)
NAS1097AD3
(CSK LDW280-11185-11)
LDW280-11185-24
LDW280-11185-23
NAS1097AD3 (2)
(CSK LDW280-11185-21)
NAS1097AD3 (2)
(CSK LDW280-11185-21)
LDW280-11185-11
MS20470AD4 (2)
LDW280-11185-11 (REF)
LDW280-11185-21 (REF)
LDW280-11185-23 (REF)

LDW280-51870-1 ASSY

MANUFACTURING OPERATIONS UNLESS OTHERWISE SPECIFIED NOTES CHECKED ✓ APPLY TO THIS DWG.	
RUBBER STAMP PART NUMBER AND ALL OTHER MARKINGS IN REGION MARKED ⊠ ~~USE BOTH SIDES IF NECESSARY.~~	✓
FILLET AND INSIDE CORNER RADII TOLERANCES .016R TO .062R ± .010 .063R TO .250R ± .015 OVER .250R ± .030	
DEPTH SHOWN FOR TAPPED HOLES IS FULL THDS. 2-3 IMP. THDS. BEYOND PERMISSIBLE	
EXTERNAL THREAD LENGTH SHOWN INCLUDES 2 IMPERFECT THREADS MAX.	
DO NOT CADMIUM PLATE & PAINT HOLES OR SURFACES MARKED WITH DOUBLE ASTERISK.	
MISMATCH STEP OF ± .005 PERMISSIBLE DUE TO CHANGE OF CUTTERS AT INSIDE INTERSECTING SURFACES.	
DIAMETERS MARKED MUST BE CONCENTRIC WITHIN FULL INDICATOR READING	
HOLES MUST BE KEPT FREE OF CHROME PLATING SOLUTION.	
ALL DIMENSIONS SHOWN TO BE MET AFTER CADMIUM PLATING. THICKNESS OF PLATE .0003 MIN TO .0005 MAX. MIN THICKNESS TO BE .0002 ON THREADED AREAS. NO ALLOWANCES FOR PLATING IN HOLES	
125√ SURFACE ROUGHNESS INCLUDING REAMED HOLES PER MIL-STD-10	
200√ FOR ALL DRILLED HOLES	
REMOVE ALL BURRS. BREAK ALL EDGES .015-.031	
INSPECTION INFORMATION MINIMUM PERMISSIBLE AVERAGE EDGE DISTANCE MARKED IS	
SYMBOL √ DENOTES SURFACE TO BE MACHINED	
UNLESS OTHERWISE SPECIFIED TOLERANCE ON FLANGES IS ± 1/32	
LENGTHS OF AN, NAS & MS AL ALY RIVETS SHORTER THAN 1 INCH ARE NOT SPECIFIED	✓
TOLERANCE ON LOFTED DELINEATIONS IS	

GRUMMAN AIRCRAFT ENGRG CORP. BETHPAGE, L. I., NEW YORK

SIZE	CODE IDENT NO.	
D	26512	LDW280-51870

MODEL OR END ITEM
SCALE FULL
SHEET 3.0C

01

NAS 9-1100

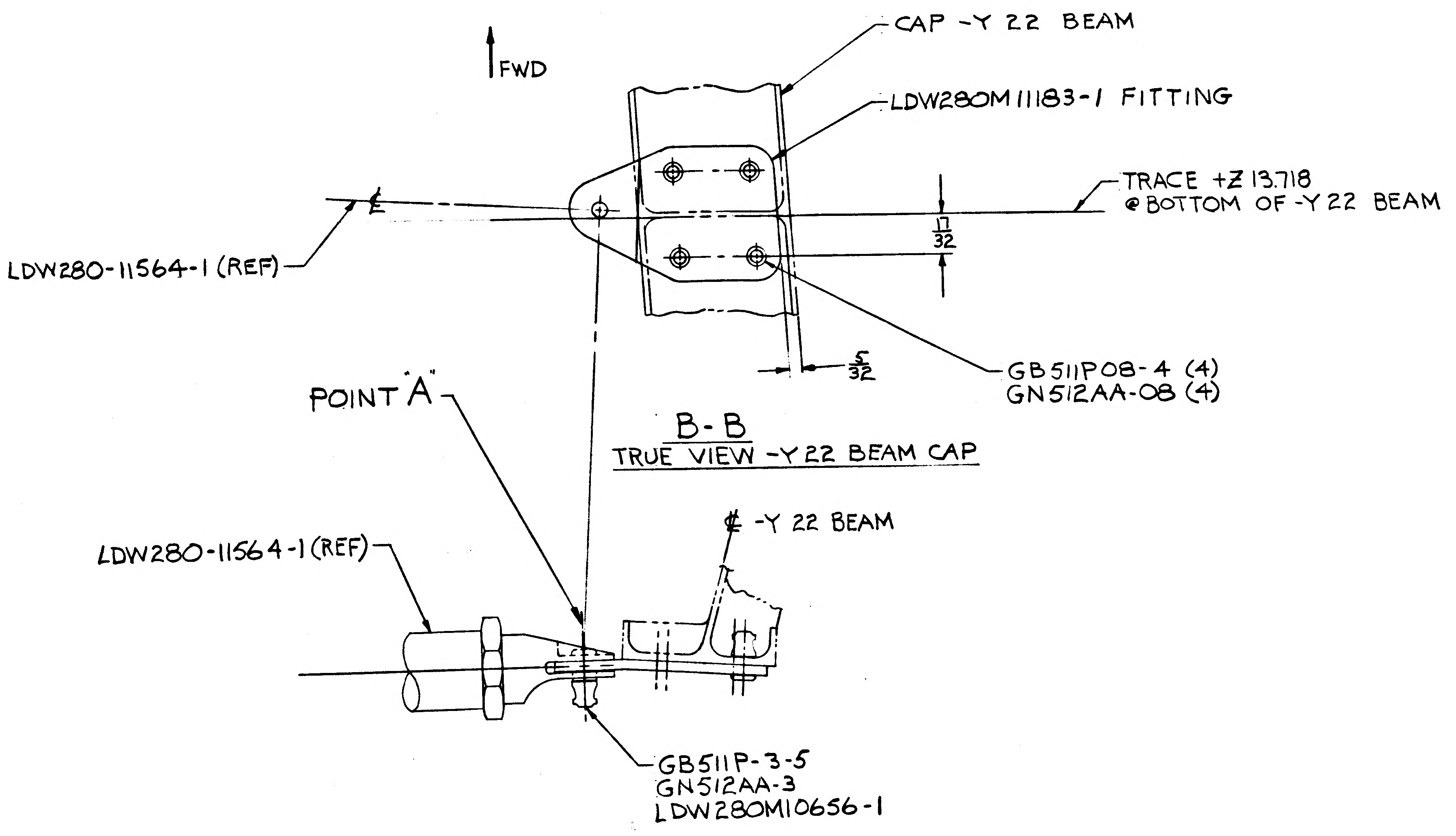

FWD
CAP -Y 22 BEAM
LDW280M11183-1 FITTING
TRACE +Z 13.718 @ BOTTOM OF -Y 22 BEAM
1/32
LDW280-11564-1 (REF)
5/32
GB511P08-4 (4)
GN512AA-08 (4)
POINT "A"
LDW280-11564-1 (REF)
℄ -Y 22 BEAM
GB511P-3-5
GN512AA-3
LDW280M10656-1

B-B
TRUE VIEW -Y 22 BEAM CAP

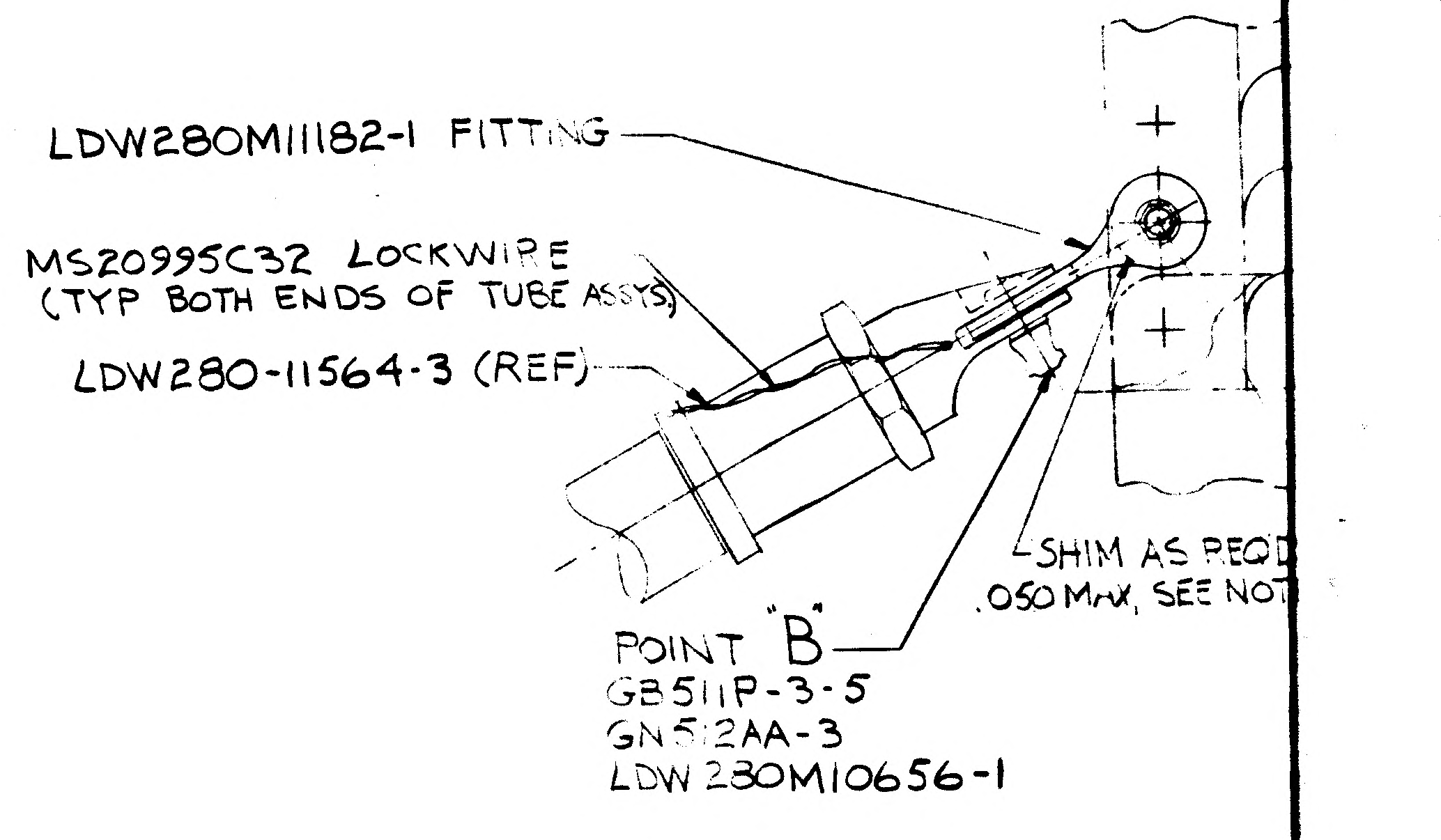

LDW280M11182-1 FITTING
MS20995C32 LOCKWIRE (TYP BOTH ENDS OF TUBE ASSYS)
LDW280-11564-3 (REF)
SHIM AS REQ'D .050 MAX, SEE NOT
POINT "B"
GB511P-3-5
GN512AA-3
LDW280M10656-1

A-A
TRUE VIEW

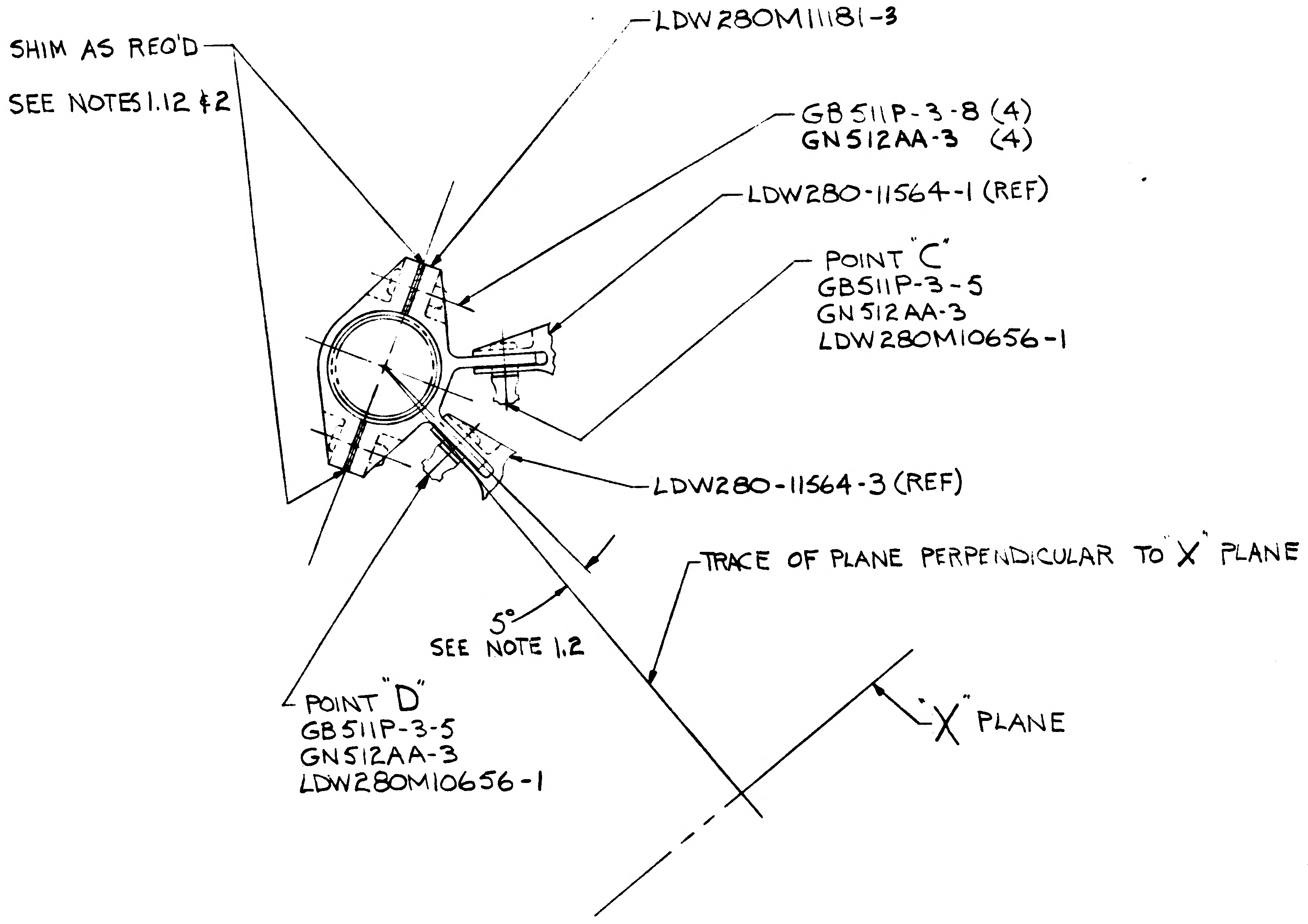

SHIM AS REQ'D
SEE NOTES 1.1 & 2
LDW280M11181-3
GB511P-3-8 (4)
GN512AA-3 (4)
LDW280-11564-1 (REF)
POINT "C"
GB511P-3-5
GN512AA-3
LDW280M10656-1
LDW280-11564-3 (REF)
TRACE OF PLANE PERPENDICULAR TO "X" PLANE
5°
SEE NOTE 1.2
"X" PLANE
POINT "D"
GB511P-3-5
GN512AA-3
LDW280M10656-1

C-C
TRUE VIEW LOOKING AXIALLY AT FUEL LINE

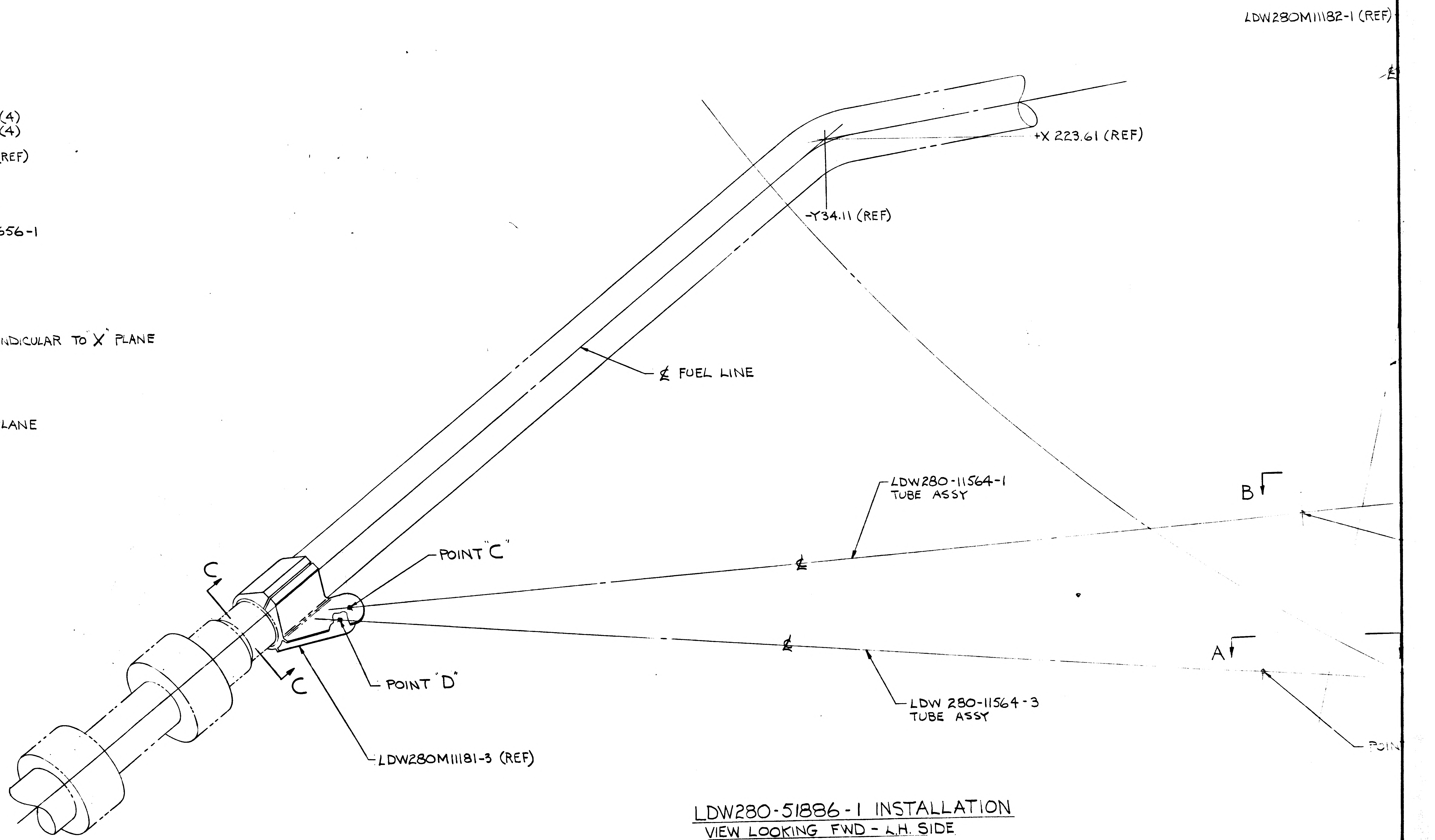

LDW280M11182-1 (REF)
+X 223.61 (REF)
-Y 34.11 (REF)
℄ FUEL LINE
LDW280-11564-1 TUBE ASSY
B
POINT "C"
C
C
℄
℄
A
POINT "D"
LDW 280-11564-3 TUBE ASSY
POIN
LDW280M11181-3 (REF)

LDW280-51886-1 INSTALLATION
VIEW LOOKING FWD - L.H. SIDE

01/03 NAS 9-1100

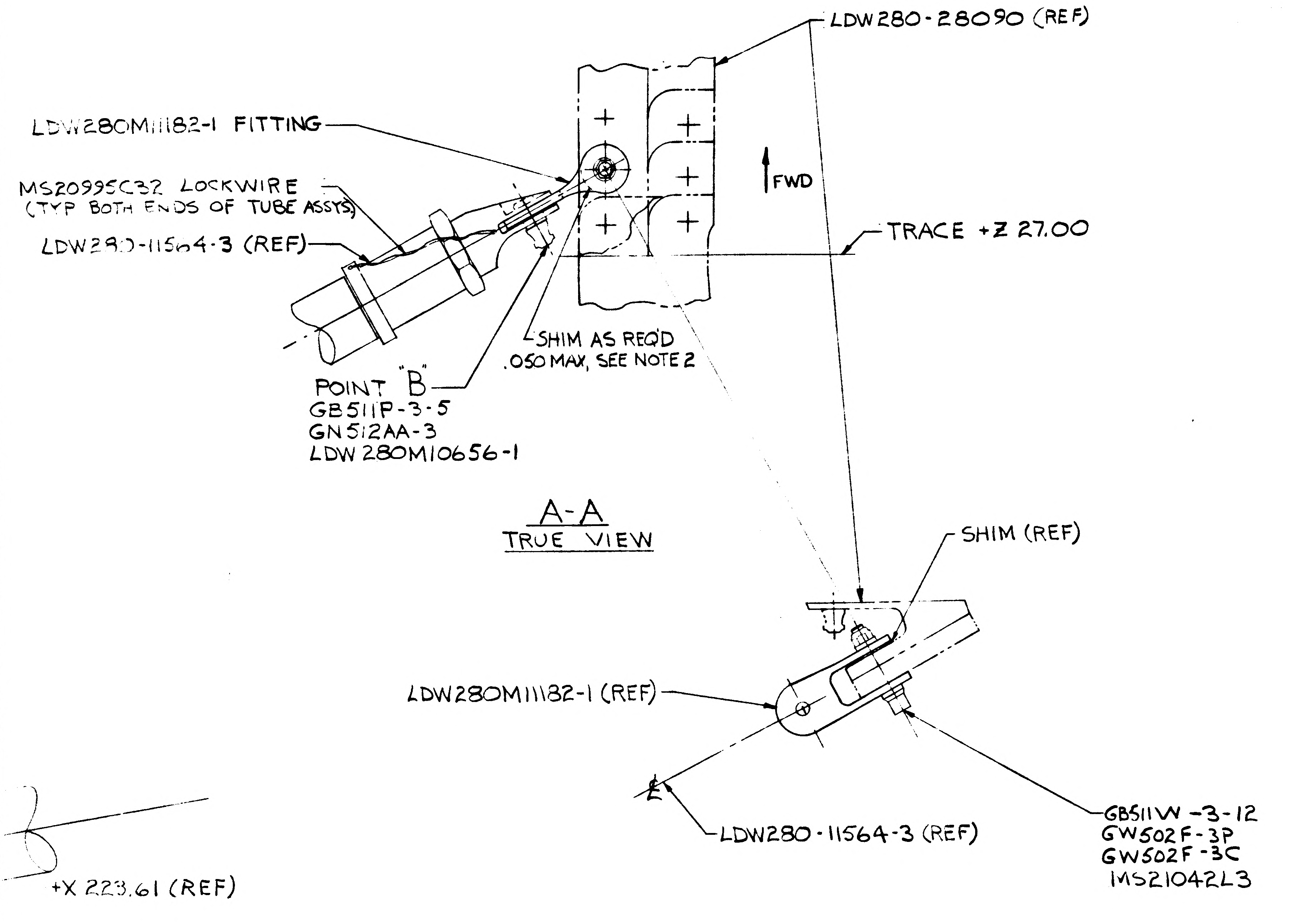

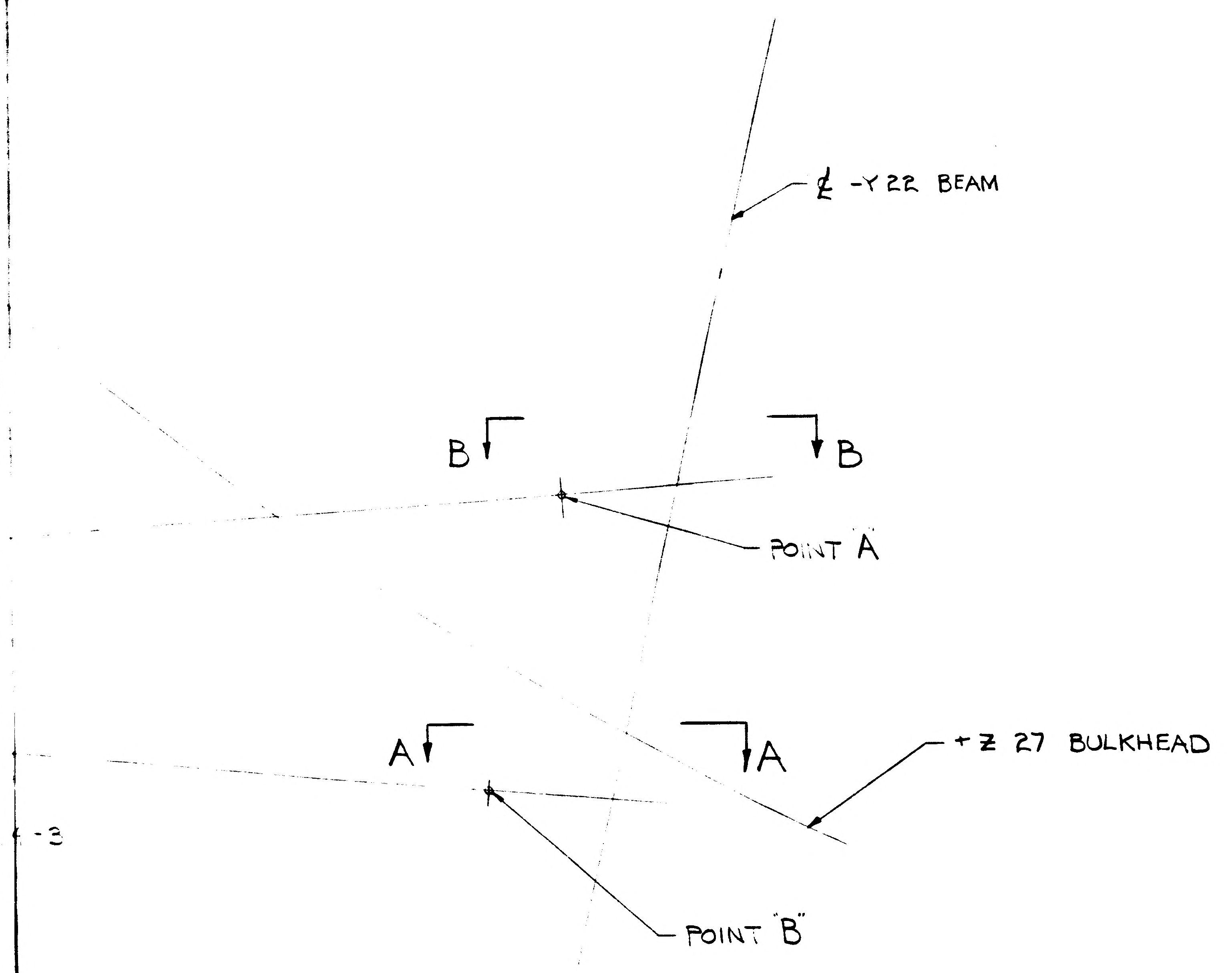

NOTES:

1. FUEL LINE BELLOWS SUPPORT INSTALLATION - INBOARD

1.1 INSTALL CLAMP LDW280M11181-1 TO FUEL LINE ENGAGING THE RING ON BRAZED COUPLING JOINING THE INBOARD END OF BELLOWS TO LINE.

1.2 TIGHTEN FOUR (4) HI-LOKS ON CLAMP UNTIL THE CLAMP HOLDS POSITION AFTER BEING ROTATED BY HAND. POSITION AS SHOWN ON DRAWING.

1.3 RETRACT THE ENDS ON LDW280-11564-3 TUBE ASSY EVENLY AND HI-LOK ONE END TO THE FORWARD FITTING ON -Y22 BEAM FINGER TIGHT.

1.4 TURN THE TUBE OF THE TUBE ASSY, WHILE ENGAGING THE APPROPRIATE TANG ON THE FUEL LINE CLAMP, UNTIL HOLE IN END ALIGNS WITH HOLE IN TANG.

1.5 INSTALL HARDWARE AND SECURE FINGER TIGHT.

1.6 REPEAT THIS OPERATION WITH THE LDW280-11564-1 TUBE ASSY, HI-LOK THE INBOARD END TO THE AFT FITTING ON -Y22 BEAM AND OUTBOARD END TO TANG ON THE FUEL LINE CLAMP.

NOTE: WHEN INSTALLING TUBE ASSEMBLIES MAKE CERTAIN "TURNBUCKLE ACTION" PRODUCES AN EVEN EXTENSION OF EACH END FITTING AND THAT END FITTINGS ARE VISIBLE THROUGH THE INSPECTION HOLES.

1.7 ALIGN THE FUEL LINE CLAMP TO PRODUCE THE BEST TUBE ASSY POSITION. AN EVEN GAP BETWEEN THE MALE AND FEMALE PARTS OF THE END CONNECTIONS IS IDEAL.

1.8 EVENLY TORQUE THE FOUR (4) CLAMP HI-LOKS 8 TO 10 IN. LBS OVER THE NUT LOCKING FEATURE REQ'MENTS.

1.9 ATTACH THE BELLOWS ALIGNMENT TOOL.

1.10 EXTEND THE TUBE ASSEMBLIES TO REMOVE END PLAY IN STRUT & TIGHTEN JAM NUT.

CAUTION: DO NOT EXTEND THE TUBE ASSEMBLIES PAST THE REMOVAL OF "END PLAY" AS THE RESULTING PRELOAD WILL DISTORT THE BELLOWS WHEN THE BELLOWS ALIGNMENT TOOL IS REMOVED.

1.11 TIGHTEN HI-LOKS AT EACH END OF TUBE ASSEMBLIES PER LSP-14-15306.

1.12 MEASURE THE GAP BETWEEN EACH HALF OF THE CLAMP ON EACH SIDE AND AVERAGE TO DETERMINE SHIM THICKNESS. SHIM THICKNESS ON EACH SIDE TO BE THIS AVERAGE VALUE SEE SECT CC.

1.13 REMOVE HI-LOKS AND ADD REQUIRED SHIMS. SEE NOTE 2.

1.14 BOND CLAMP TO LINE WITH EC2216 PER LSP-14-22500- CURE RANGE I.

1.15 REPLACE HI-LOKS PER LSP-14-15306.

1.16 LOCK WIRE EACH END FITTING PER MS33591 AS APPLICABLE.

NOTE: DO NOT REMOVE BELLOWS ALIGNMENT TOOL UNTIL THE LDW280-51888 INSTL HAS BEEN ADDED TO THE TANK SIDE OF THE FUEL LINE BELLOWS.

2. SHIM AS REQ'D USING AL. ALLOY SHT, 2024-T3, QQ-A-250/4. FIN. 76

NO.	FINISHES	GRUMMAN STD SPEC	MILITARY SPEC NO.
2	CADMIUM PLATE	G. S. S.	
10	ZINC CHROMATE PRIMER	G. S. S.	
15	TINTED PRIMER: 1 COAT	G. S. S.	
76	ALODINE	~~G. S. S.~~ LSP-14-9010	
88	ANODIZE	G. S. S.	

RECORD DRAWINGS AND E.O.'S

MODEL	RECORD DWG NO.	E. O. NO.	MILITARY NO.	APL NO.

SYM	PROCESSES	GRUMMAN STD SPEC	MILITARY SPEC NO.
	AL HEAT TREAT		MIL-H-6088
	MAGNAFLUX		MIL-I-6868
	PENETRANT INSPECTION (ZYGLO)		MIL-I-6866
	THREADING		MIL-S-7742
	STEEL HEAT TREAT PSI ROCKWELL C TO C		

MANUFACTURING OPERATIONS

NOTES CHECKED √ APPLY TO THIS DWG.

ALL DIMENSIONS SHOWN TO BE MET AFTER CADMIUM PLATING. THICKNESS OF PLATE .0003 MIN TO .0005 MAX. MIN THICKNESS TO BE .0002 ON THREADED AREAS. NO ALLOWANCE FOR PLATING IN HOLES EXCEPT AS NOTED.	
REMOVE ALL BURRS. BREAK ALL EDGES .015-.031 EXCEPT AS NOTED.	
125√ SURFACE ROUGHNESS INCLUDING REAMED HOLES PER MIL-STD-10 EXCEPT AS NOTED.	
200√ FOR ALL DRILLED HOLES UNLESS OTHERWISE SPECIFIED.	
HOLES MUST BE KEPT FREE OF CHROME PLATING SOLUTION.	
PART NUMBER AND ALL OTHER MARKINGS IN REGION MARKED ⊠ USE BOTH SIDES IF NECESSARY.	
FILLET AND INSIDE CORNER RADII TOLERANCES .016R TO .062R ± .010 .063R TO .250R ± .015 OVER .250R ± .030	
DEPTH SHOWN FOR TAPPED HOLES IS FULL THDS. 2-3 IMP THDS BEYOND PERMISSIBLE.	
EXTERNAL THREAD LENGTH SHOWN INCLUDES 2 IMPERFECT THREADS MAX.	
DO NOT CADMIUM PLATE & PAINT HOLES OR SURFACES MARKED WITH DOUBLE ASTERISK.	
MISMATCH STEP OF ± .005 PERMISSIBLE DUE TO CHANGE OF CUTTERS AT INSIDE INTERSECTING SURFACES.	
DIAMETERS MARKED MUST BE CONCENTRIC WITHIN FULL INDICATOR READING	
INSPECTION INFORMATION MINIMUM PERMISSIBLE AVERAGE EDGE DISTANCE MARKED IS	
SYMBOL ∫ DENOTES SURFACE TO BE MACHINED	
UNLESS OTHERWISE SPECIFIED TOLERANCE ON FLANGES IS ± 1/32	
LENGTHS OF AN, NAS & MS AL ALY RIVETS SHORTER THAN 1 INCH ARE NOT SPECIFIED.	

QTY REQD PER ASSY	PART OR IDENTIFYING NO.	CODE IDENT
AS REQ'D	SEE NOTE 2	E
AS REQ'D	MS20995C32	E
1	GW502F-3P	E
1	GW502F-3C	E
1	GB511W-3-12	E
8	GN512AA-3	E
4	GN512AA-08	E
4	GB511P-3-5	E
4	GB511P08-4	E
4	GB511P-3-8	E
1	MS21042L3	E
1	LDW280M11183-1	E
1	LDW280M11182-1	E
1	LDW280M11181-3	E
—	LDW280M10656-1	E
1	LDW280-11564-3	E
	LDW280-115[illegible]	E
	LDW280-51886-1	E

MODEL	NEXT ASSY	MODULE NUMBER
L M	LDW280-51002	[illegible] (31)

PART NUMBER LDW280-5[illegible]

02/03

NAS 9-1100

B511W-3-12
W502F-3P
W502F-3C
IS21042L3

NOTES:

1. FUEL LINE BELLOWS SUPPORT INSTALLATION - INBOARD
1.1 INSTALL CLAMP LDW280M11181-1 TO FUEL LINE ENGAGING THE RING ON BRAZED COUPLING JOINING THE INBOARD END OF BELLOWS TO LINE.
1.2 TIGHTEN FOUR (4) HI-LOKS ON CLAMP UNTIL THE CLAMP HOLDS POSITION AFTER BEING ROTATED BY HAND. POSITION AS SHOWN ON DRAWING.
1.3 RETRACT THE ENDS ON LDW280-11564-3 TUBE ASSY EVENLY AND HI-LOK ONE END TO THE FORWARD FITTING ON -Y22 BEAM FINGER TIGHT.
1.4 TURN THE TUBE OF THE TUBE ASSY, WHILE ENGAGING THE APPROPRIATE TANG ON THE FUEL LINE CLAMP, UNTIL HOLE IN END ALIGNS WITH HOLE IN TANG.
1.5 INSTALL HARDWARE AND SECURE FINGER TIGHT.
1.6 REPEAT THIS OPERATION WITH THE LDW280-11564-1 TUBE ASSY, HI-LOK THE INBOARD END TO THE AFT FITTING ON -Y22 BEAM AND OUTBOARD END TO TANG ON THE FUEL LINE CLAMP.

NOTE: WHEN INSTALLING TUBE ASSEMBLIES, MAKE CERTAIN "TURNBUCKLE ACTION" PRODUCES AN EVEN EXTENSION OF EACH END FITTING AND THAT END FITTINGS ARE VISIBLE THROUGH THE INSPECTION HOLES.

1.7 ALIGN THE FUEL LINE CLAMP TO PRODUCE THE BEST TUBE ASSY POSITION. AN EVEN GAP BETWEEN THE MALE AND FEMALE PARTS OF THE END CONNECTIONS IS IDEAL.
1.8 EVENLY TORQUE THE FOUR (4) CLAMP HI-LOKS 8 TO 10 IN. LBS OVER THE NUT LOCKING FEATURE REQ'MENTS.
1.9 ATTACH THE BELLOWS ALIGNMENT TOOL.
1.10 EXTEND THE TUBE ASSEMBLIES TO REMOVE END PLAY IN STRUT & TIGHTEN JAM NUT.

CAUTION: DO NOT EXTEND THE TUBE ASSEMBLIES PAST THE REMOVAL OF "END PLAY" AS THE RESULTING PRELOAD WILL DISTORT THE BELLOWS WHEN THE BELLOWS ALIGNMENT TOOL IS REMOVED.

1.11 TIGHTEN HI-LOKS AT EACH END OF TUBE ASSEMBLIES PER LSP-14-15306.
1.12 MEASURE THE GAP BETWEEN EACH HALF OF THE CLAMP ON EACH SIDE AND AVERAGE TO DETERMINE SHIM THICKNESS. SHIM THICKNESS ON EACH SIDE TO BE THIS AVERAGE VALUE SEE SECT C-C.
1.13 REMOVE HI-LOKS AND ADD REQUIRED SHIMS. SEE NOTE 2.
1.14 BOND CLAMP TO LINE WITH EC2216 PER LSP-14-22500- CURE RANGE I.
1.15 REPLACE HI-LOKS PER LSP-14-15306.
1.16 LOCK WIRE EACH END FITTING PER MS33591 AS APPLICABLE.

NOTE: DO NOT REMOVE BELLOWS ALIGNMENT TOOL UNTIL THE LDW280-51888 INSTL HAS BEEN ADDED TO THE TANK SIDE OF THE FUEL LINE BELLOWS.

2. SHIM AS REQ'D USING AL ALLOY SHT, 2024-T3, QQ-A-250/4. FIN. 76

NO.	FINISHES	GRUMMAN STD SPEC	MILITARY SPEC NO.
2	CADMIUM PLATE	G. S. S.	
10	ZINC CHROMATE PRIMER	G. S. S.	
15	TINTED PRIMER: 1 COAT	G. S. S.	
76	ALODINE	~~G. S. S.~~ LSP-14-9010	
88	ANODIZE	G. S. S.	

RECORD DRAWINGS AND E.O.'S

MODEL	RECORD DWG NO.	E. O. NO.	MILITARY NO.	APL. NO.

REVISIONS

REVISION LETTER	ITEM NO.	ZONE	AUTHORITY FOR REVISION: GRUMMAN INFO ONLY / DCRF OR ECP	CLASS II	CLASS I	DET SPEC REQ	ENGRG ORDER IBCC NO.	DESCRIPTION	REVISED BY AND DATE	EFFECTIVE ON MILITARY NUMBER	DISPOSITION OF EXIST PARTS: RE-WORK	SCRAP	ENGRG APPD	GOVT APPD

SYM	PROCESSES	GRUMMAN STD SPEC	MILITARY SPEC NO.
	AL HEAT TREAT		MIL-H-6088
	MAGNAFLUX		MIL-I-6868
	PENETRANT INSPECTION (ZYGLO)		MIL-I-6866
	THREADING		MIL-S-7742
	STEEL HEAT TREAT PSI ROCKWELL C TO C		

MANUFACTURING OPERATIONS

NOTES CHECKED ✓ APPLY TO THIS DWG.

- ALL DIMENSIONS SHOWN TO BE MET AFTER CADMIUM PLATING. THICKNESS OF PLATE .0003 MIN TO .0005 MAX. MIN THICKNESS TO BE .0002 ON THREADED AREAS. NO ALLOWANCE FOR PLATING IN HOLES EXCEPT AS NOTED.
- REMOVE ALL BURRS. BREAK ALL EDGES .015-.031 EXCEPT AS NOTED.
- 125 √ SURFACE ROUGHNESS INCLUDING REAMED HOLES PER MIL-STD-10 EXCEPT AS NOTED.
- 200 √ FOR ALL DRILLED HOLES UNLESS OTHERWISE SPECIFIED.
- HOLES MUST BE KEPT FREE OF CHROME PLATING SOLUTION.
- PART NUMBER AND ALL OTHER MARKINGS IN REGION MARKED ⊠ USE BOTH SIDES IF NECESSARY.
- FILLET AND INSIDE CORNER RADII TOLERANCES
  - .016R TO .062R ± .010
  - .063R TO .250R ± .015
  - OVER .250R ± .030
- DEPTH SHOWN FOR TAPPED HOLES IS FULL THDS. 2-3 IMP THDS BEYOND PERMISSIBLE.
- EXTERNAL THREAD LENGTH SHOWN INCLUDES 2 IMPERFECT THREADS MAX.
- DO NOT CADMIUM PLATE & PAINT HOLES OR SURFACES MARKED WITH DOUBLE ASTERISK.
- MISMATCH STEP OF ± .005 PERMISSIBLE DUE TO CHANGE OF CUTTERS AT INSIDE INTERSECTING SURFACES.
- DIAMETERS MARKED MUST BE CONCENTRIC WITHIN FULL INDICATOR READING
- INSPECTION INFORMATION MINIMUM PERMISSIBLE AVERAGE EDGE DISTANCE MARKED IS
- SYMBOL √ DENOTES SURFACE TO BE MACHINED
- UNLESS OTHERWISE SPECIFIED TOLERANCE ON FLANGES IS ± 1/32
- LENGTHS OF AN, NAS & MS AL ALY RIVETS SHORTER THAN 1 INCH ARE NOT SPECIFIED.

03/037 NAS 9-1100

LDW280-51886

QTY REQD PER ASSY -1	PART OR IDENTIFYING NO.	I&T	CODE IDENT	NOMENCLATURE OR DESCRIPTION	MATERIAL	GOVT SPEC	COML SPEC	STOCK SIZE (EA)	PROCESS SYMBOL	FINISH NO.	UNIT WT	ZONE
AS REQ'D	SEE NOTE 2	E		SHIM								
AS REQ'D	MS20995C32	E		LOCK WIRE								
1	GW502F-3P	E		WASHER	GRUMMAN STD							
1	GW502F-3C	E		WASHER	GRUMMAN STD							
1	GB511W-3-12	E		BOLT	GRUMMAN STD							
8	GN512AA-3	E		NUT	GRUMMAN STD							
4	GN512AA-08	E		NUT	↕							
4	GB511P-3-5	E		BOLT	↕							
4	GB511P08-4	E		BOLT	↕							
4	GB511P-3-8	E		BOLT	GRUMMAN STD							
1	MS21042L3	E		NUT	STD PART							
1	LDW280M11183-1	E		FITTING	SEE DWG							
1	LDW280M11182-1	E		FITTING	↕							
1	LDW280M11181-3	E		CLAMP	↕							
4	LDW280M10656-1	E		BUSHING	↕							
1	LDW280-11564-3	E		TUBE ASSY	↕							
1	LDW280-11564-1	E		TUBE ASSY	SEE DWG							
	LDW280-51886-1	E		SUPPORT INSTL					NONE	NONE		

DWG MAY BE REDRAWN ON PRODUCTION FORMAT

MODEL	NEXT ASSY	MODULE NUMBER		REQD PER MODULE
L M	LDW280-51002	L M-1 (31)		1

PART NUMBER LDW280-51886-1

GRUMMAN SCH INFO

UNLESS OTHERWISE SPECIFIED DIMENSIONS ARE IN INCHES.
TOLERANCE UNLESS SPECIFIED: FRACTIONS - DECIMALS - ANGLES
± 1/32 ±.010 ± 1/2°

ORIG DWG AUTH
DETAIL SPEC REQUIREMENT
CLASS II ENGRG CHANGE
CLASS I ENGRG CHANGE

GRUMMAN REL INFO
PRIM NO 1E(001)
215 MP 9-30-6

DRAWN BY LOWENSTEIN
LAYOUT BY LOWENSTEIN 9/16/66
CHECKED BY
GR LEADER 9/27/66
STRUCTURE 9-29
STRUCTURE
WEIGHTS
PROJ ENGR R M Carbee 9-30
VEH DES INT
RELEASE 10-8-66

GRUMMAN AIRCRAFT ENGRG CORP
BETHPAGE, L. I., N. Y.

SUPPORT INSTALLATION
ASCENT STAGE ~ MID-SECTION
FUEL TANK BELLOWS INBOARD

CONTRACT NO. NAS9-1100 DOCUMENTATION TYPE I

CODE IDENT NO. 26512 SIZE J LDW280-51886

SCALE FULL LINE ITEM 1 SHEET 1 OF 1

CDR 9/30/66

DWG. SIZE 34 X

PRINTING INFO ONLY
FULL SIZE SHEET AREA (36 X) = SQ. FT.
1/2 SIZE SHEET AREA (1/4 OF FULL) = SQ. FT.

PRINT TRIM LINE

ENG 32.1 REV 3-65

GRUMMAN AIRCRAFT ENGINEERING CORP.
CODE IDENT NO. 26512
ENGINEERING ORDER

DWG. NO. LDW280-51886 | EO NO. A1
CONTROL INFO NO. LDW280A-3161

1. IN F/D REMOVE NOTE 1.16 (LOCKWIRE -- ETC.. ")

2. IN N/A BLOCK REVISE AS SHOWN:

NOW: 1 OF LDW280-51886-1 REQ'D ON LDW280-51001 FOR LM-1 (31)

WAS: 1 OF LDW280-51886-1 REQ'D ON LDW280-51002 FOR LM-1 (31)

DETAIL SPEC REQ		CL II ENGRG CHG		CL I ENGRG CHG		3

REASON FOR EO: LOCKWIRE CALLED OUT ON N/A & TO REVISE N/A

DESCRIPTION OF EO: CN-1 REMOVE NOTE # 1.16 FROM F/D, CHANGE N/A FROM LDW280-51002 TO LDW280-51001

GAEC EO RELEASE: [illegible]

MODEL	PROCURING ACTIVITY NO.	GAEC UNIT NO.	SUB CONTR UNIT NO.
LM		LM-1 (31)	

DRAWING CHANGE REQD: REVISE DWG	RECORD EO	DISPOSITION OF PARTS: REWORK	SCRAP
✓		✓	

		SUPPORT	RELIAB. GROUP	GROUP LEADER	STRESS GROUP	LIAISON ENGRG	PROJ ENGRG	[illegible]
APPROVED BY	[illegible]			—	[illegible]		RAC	[illegible]
DATE	11/10/66			—	[illegible]		11-17-66	[illegible]
6	1/11							

PRIORITY: C

DRAWING TITLE: SUPPORT INSTALL. - ASCENT STAGE - MID SECT - FUEL TANK BELLOWS INDI

DRAWING NO.: LDW280-51886

EO NO.: A1

ISSUED BY VALENTINE 11/8/66 X1441 SECTION VDI (PHILLIPS) GROUP NO. 335 PL 35

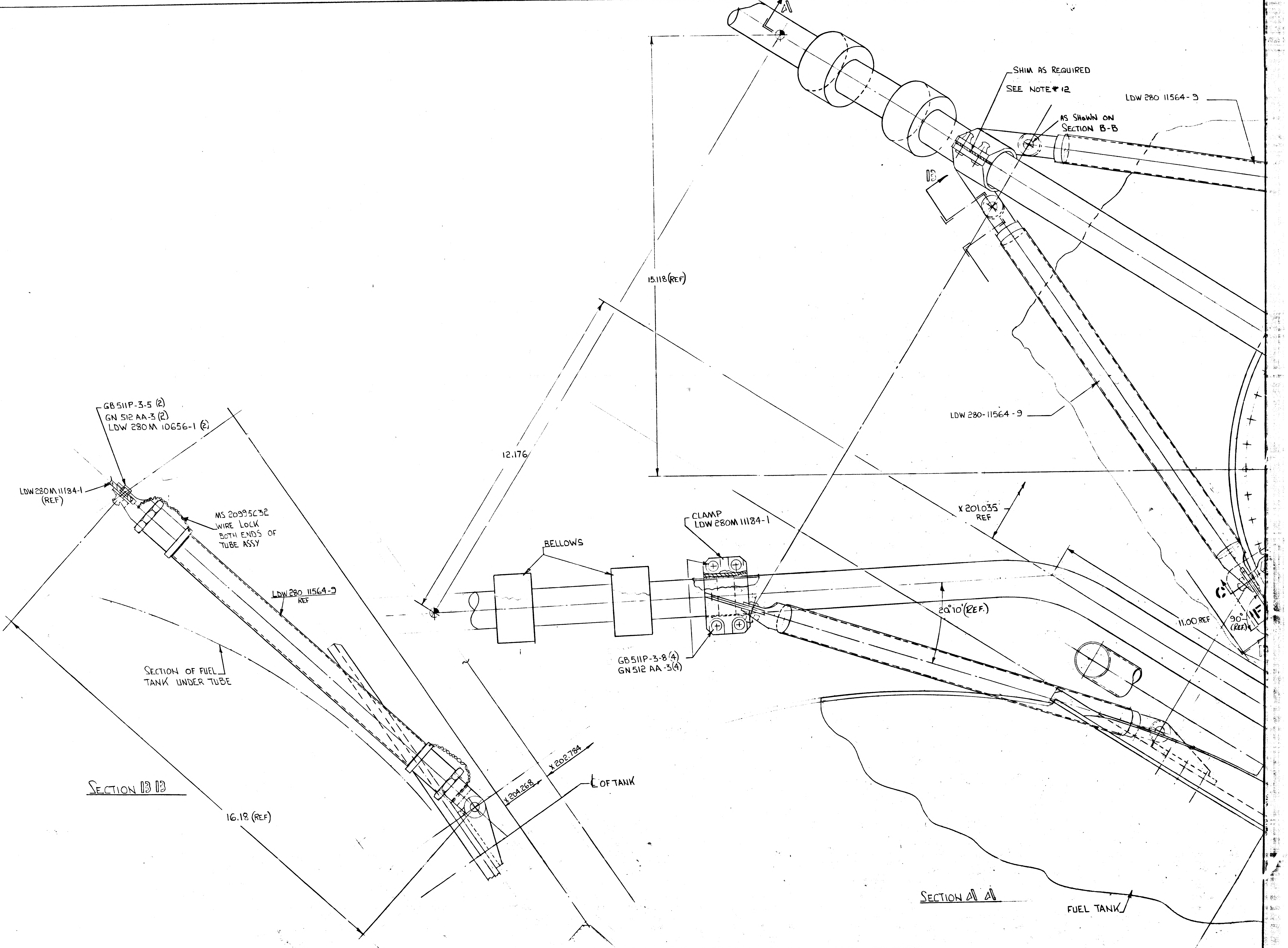
A
SHIM AS REQUIRED
SEE NOTE # 12
AS SHOWN ON
SECTION B-B
LDW 280 11564-9
B
15.118 (REF)
LDW 280-11564-9
12.176
GB511P-3-5 (2)
GN 512 AA-3 (2)
LDW 280M 10656-1 (2)
LDW280M11184-1
(REF)
MS 20995C32
WIRE LOCK
BOTH ENDS OF
TUBE ASSY
LDW 280 11564-9
REF
X 201.035
REF
CLAMP
LDW 280M 11184-1
BELLOWS
20°10' (REF.)
11.00 REF
90°
(REF)
GB511P-3-8 (4)
GN 512 AA-3 (4)
SECTION OF FUEL
TANK UNDER TUBE
SECTION B B
16.18 (REF)
X 204.268
X 202.784
℄ OF TANK
SECTION A A
FUEL TANK

01/03 NAS 9-1100

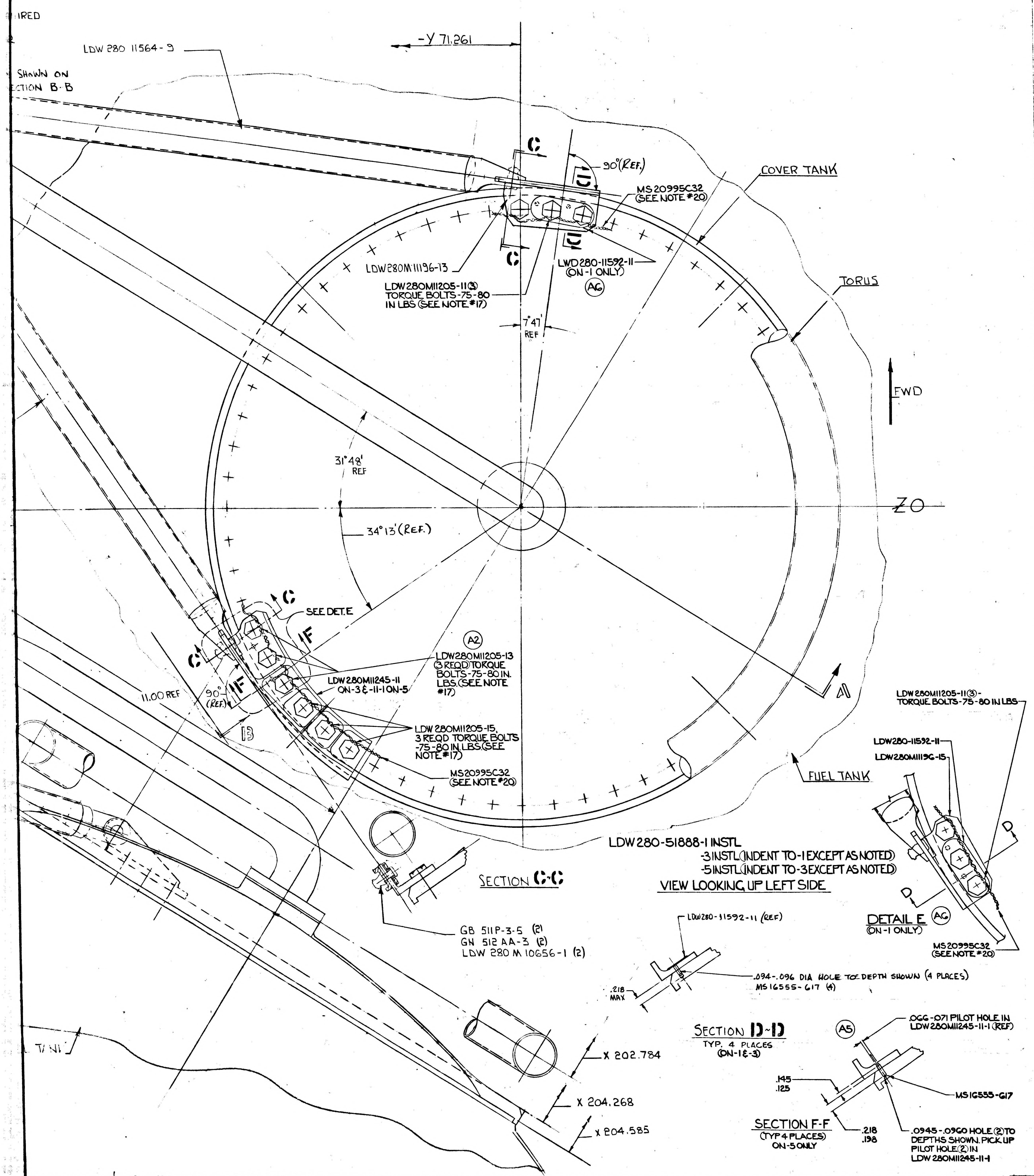
IRED
LDW 280 11564-9
SHOWN ON
CTION B-B
-Y 71.261
C
90°(REF.)
MS 20995C32
(SEE NOTE #20)
COVER TANK
C
LDW280M11196-13
LDW280M11205-11(3)
TORQUE BOLTS-75-80
IN LBS (SEE NOTE #17)
LWD280-11592-11
(ON-1 ONLY)
A6
7°47'
REF
TORUS
FWD
31°48'
REF
ZO
34°13'(REF.)
C
SEE DET. E
F
A2
LDW280M11205-13
(3 REQD) TORQUE
BOLTS-75-80 IN.
LBS. (SEE NOTE
#17)
C
F
LDW280M11245-11
ON-3 & -11-1 ON-5
11.00 REF
90°
(REF.)
B
LDW 280M11205-15,
3 REQD TORQUE BOLTS
-75-80 IN. LBS. (SEE
NOTE #17)
MS20995C32
(SEE NOTE #20)
A
LDW280M11205-11(3)-
TORQUE BOLTS-75-80 IN LBS
LDW280-11592-11
LDW280M11196-15
FUEL TANK
D
D
SECTION C-C
GB 511P-3-5 (2)
GN 512 AA-3 (2)
LDW 280 M 10656-1 (2)
LDW280-51888-1 INSTL
-3 INSTL (INDENT TO -1 EXCEPT AS NOTED)
-5 INSTL (INDENT TO -3 EXCEPT AS NOTED)
VIEW LOOKING UP LEFT SIDE
DETAIL E
(ON-1 ONLY)
A6
MS20995C32
(SEE NOTE #20)
LDW280-11592-11 (REF)
.218
MAX
.094-.096 DIA HOLE TO DEPTH SHOWN (4 PLACES)
MS 16555-617 (4)
SECTION D-D
TYP. 4 PLACES
(ON-1 & -3)
A5
.066-.071 PILOT HOLE IN
LDW280M11245-11-1 (REF)
.145
.125
MS16555-617
SECTION F-F
(TYP 4 PLACES)
ON-5 ONLY
.218
.198
.0945-.0960 HOLE (2) TO
DEPTHS SHOWN. PICK UP
PILOT HOLE (2) IN
LDW 280M11245-11-1
X 202.784
X 204.268
X 204.585
T/ NI

INSTALLATION PROCEDURE:

1. INSTALL CLAMP LDW280M1118 -1 TO FUEL LINE ENGAGING THE RING ON BRAZED COUPLING JOINING THE OUTBOARD END OF BELLOWS TO LINE.
2. TIGHTEN FOUR (4) HI-LOKS ON CLAMPS UNTIL THE CLAMP HOLDS POSITION AFTER BEING ROTATED BY HAND. POSITION AS SHOWN
3. RETRACT THE ENDS ON LDW280-11564-9 TUBE ASSEMBLY EVENLY AND BOLT ONE END TO THE FORWARD FITTING ON THE FUEL TANK - FINGER TIGHT.
4. TURN THE TUBE OF THE TUBE ASSEMBLY, WHILE ENGAGING THE APPROPRIATE TANG ON THE FUEL LINE CLAMP, UNTIL HOLE IN END ALIGNS WITH HOLE IN TANG.
5. INSTALL HARDWARE AND SECURE FINGER TIGHT.
6. REPEAT THIS OPERATION WITH THE OTHER LDW280-11564-9 TUBE ASSEMBLY, BOLTING THE OUTBOARD END TO THE AFT FITTING ON THE FUEL TANK AND INBOARD END TO TANG ON THE FUEL LINE CLAMP.

   NOTE: WHEN INSTALLING TUBE ASSEMBLIES, MAKE CERTAIN "TURNBUCKLE ACTION" PRODUCES AN EVEN EXTENSION OF EACH END FITTING AND THAT END FITTINGS ARE VISIBLE THROUGH THE INSPECTION HOLES.
7. ALIGN THE FUEL LINE CLAMP TO PRODUCE THE BEST ASSEMBLY POSITION. AN EVEN GAP BETWEEN THE MALE AND FEMALE PARTS OF THE END CONNECTIONS IS IDEAL.
8. EVENLY TORQUE THE FOUR (4) CLAMP HI-LOKS 8 TO 10 INCH POUNDS OVER THE NUT LOCKING FEATURE REQUIREMENTS
9. ATTACH THE BELLOWS ALIGNMENT TOOL TO THE BELLOWS.
10. EXTEND THE TUBE ASSEMBLIES TO REMOVE END PLAY.

    CAUTION: DO NOT EXTEND THE TUBE ASSEMBLIES PAST THE REMOVAL OF "END PLAY" AS THE RESULTING PRELOAD WILL DISTORT THE BELLOWS WHEN THE BELLOWS ALIGNMENT TOOL IS REMOVED.
11. TORQUE HI-LOKS AT EACH END OF TUBE ASSEMBLIES. PER LSP 14-15306
12. MEASURE THE GAP BETWEEN EACH HALF OF THE CLAMP ON EACH SIDE AND AVERAGE TO DETERMINE SHIM THICKNESS. SHIM THICKNESS ON EACH SIDE TO BE THIS AVERAGE VALUE AND MADE FROM AL. ALLOY QQ-A-250/4 (2024-T3) FINISH #76
13. REMOVE HI-LOKS AND ADD REQUIRED SHIMS
14. BOND CLAMPS TO LINE WITH EC 2216 PER LSP 14-22500 - CURE RANGE I
15. REPLACE FASTENERS PER LSP 14-15306.
16. ~~LOCK WIRE EACH END FITTING PER SPEC MS 33540 AS APPLICABLE~~

    ~~NOTE: DO NOT REMOVE BELLOWS ALIGNMENT TOOL UNTIL THE LDW280-51886 INSTALLATION HAS BEEN ADDED TO THE ENGINE SIDE OF THE FUEL LINE BELLOWS.~~
17. APPLY LUBRICANT LSM-14-G004 TO THREADS, BODY & FAYING SURFACES OF LDW 280M11205 BOLTS PRIOR TO INSTALLATION. WIPE OFF ANY EXCESS AFTER INSTALLATION OF BOLTS.
18. BOND MS16555 TO LDW280M11245-11 PER LSP-14-22602. ALLOW A 1/16-1/32 LONG ADHESIVE PLUG TO REMAIN IN LOWER END OF HOLE THRU LDW 280M11245-11.
19. BELLOWS SUPPORT STRUT ADJUSTMENT MAY BE PERFORMED WHILE LINE IS UNDER PRESSURE.
20. INSTALL LOCKWIRE PER MS33540.

NO.	FINISHES	
2	CADMIUM PLATE	G.
10	ZINC CHROMATE PRIMER	G.
15	TINTED PRIMER: 1 COAT	G.
76	ALODINE	G.
88	ANODIZE	G.

SYM	PROCESSES	
	AL HEAT TREAT	
	MAGNAFLUX	
	PENETRANT INSPECTION (ZYGLO)	
	THREADING	
	STEEL HEAT TREAT PSI ROCKWELL C TO C	

MANUFACTURING OPERATIONS

NOTES CHECKED √ APPLY TO THIS DWG.

ALL DIMENSIONS SHOWN TO BE MET AFTER CADMIUM PLATING. THICKNESS OF PLATE .0003 MIN TO .0005 MAX. MIN THICKNESS TO BE .0002 ON THREADED AREAS. NO ALLOWANCE FOR PLATING IN HOLES EXCEPT AS NOTED.

REMOVE ALL BURRS. BREAK ALL EDGES .015-.031 EXCEPT AS NOTED.

125√ SURFACE ROUGHNESS INCLUDING REAMED HOLES PER MIL-STD-10 EXCEPT AS NOTED.

200√ FOR ALL DRILLED HOLES UNLESS OTHERWISE SPECIFIED.

HOLES MUST BE KEPT FREE OF CHROME PLATING SOLUTION.

PART NUMBER AND ALL OTHER MARKINGS IN REGION MARKED ☒ USE BOTH SIDES IF NECESSARY.

FILLET AND INSIDE CORNER RADII TOLERANCES
.016R TO .062R ± .010
.063R TO .250R ± .015
OVER .250R ± .030

DEPTH SHOWN FOR TAPPED HOLES IS FULL THDS. 2-3 IMP THDS BEYOND PERMISSIBLE.

EXTERNAL THREAD LENGTH SHOWN INCLUDES 2 IMPERFECT THREADS MAX.

DO NOT CADMIUM PLATE & PAINT HOLES OR SURFACES MARKED WITH DOUBLE ASTERISK.

MISMATCH STEP OF ± .005 PERMISSIBLE DUE TO CHANGE OF CUTTERS AT INSIDE INTERSECTING SURFACES.

DIAMETERS MARKED MUST BE CONCENTRIC WITHIN FULL INDICATOR READING

INSPECTION INFORMATION MINIMUM PERMISSIBLE AVERAGE EDGE DISTANCE MARKED IS

SYMBOL ƒ DENOTES SURFACE TO BE MACHINED

UNLESS OTHERWISE SPECIFIED TOLERANCE ON FLANGES IS ± 1/32

LENGTHS OF AN, NAS & MS AL ALY RIVETS SHORTER THAN 1 INCH ARE NOT SPECIFIED.

02/03

NAS 9-1100

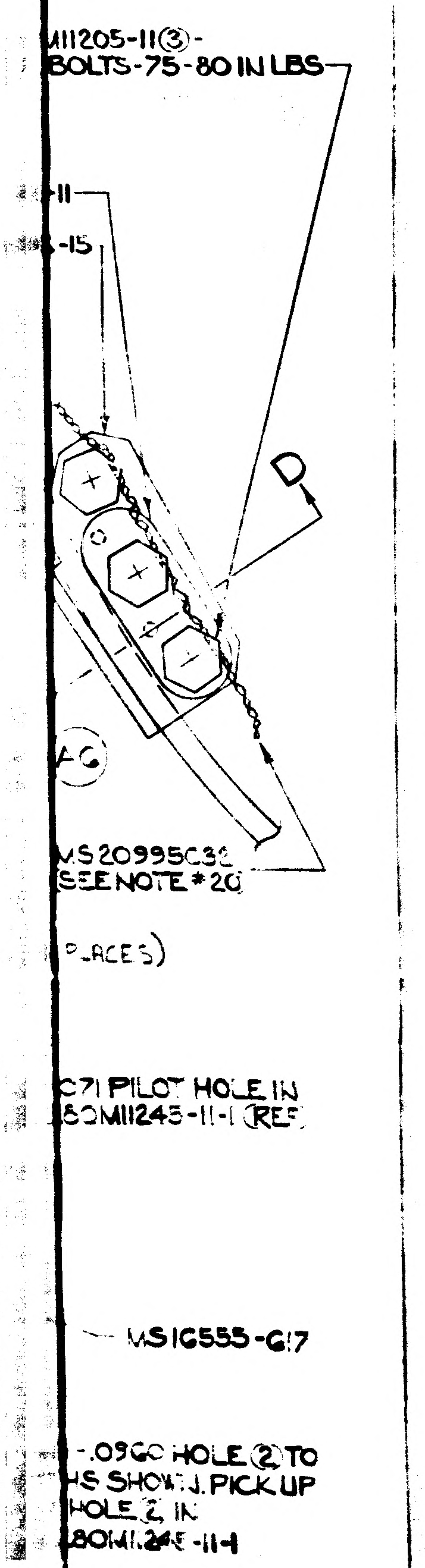

INSTALLATION PROCEDURE:

1. INSTALL CLAMP LDW280M1118 -1 TO FUEL LINE ENGAGING THE RING ON BRAZED COUPLING JOINING THE OUTBOARD END OF BELLOWS TO LINE.
2. TIGHTEN FOUR (4) HI-LOKS ON CLAMPS UNTIL THE CLAMP HOLDS POSITION AFTER BEING ROTATED BY HAND. POSITION AS SHOWN
3. RETRACT THE ENDS ON LDW280-11564-9 TUBE ASSEMBLY EVENLY AND BOLT ONE END TO THE FORWARD FITTING ON THE FUEL TANK - FINGER TIGHT.
4. TURN THE TUBE OF THE TUBE ASSEMBLY, WHILE ENGAGING THE APPROPRIATE TANG ON THE FUEL LINE CLAMP, UNTIL HOLE IN END ALIGNS WITH HOLE IN TANG.
5. INSTALL HARDWARE AND SECURE FINGER TIGHT.
6. REPEAT THIS OPERATION WITH THE OTHER LDW280-11564-9 TUBE ASSEMBLY, BOLTING THE OUTBOARD END TO THE AFT FITTING ON THE FUEL TANK AND INBOARD END TO TANG ON THE FUEL LINE CLAMP.
   NOTE: WHEN INSTALLING TUBE ASSEMBLIES, MAKE CERTAIN "TURNBUCKLE ACTION" PRODUCES AN EVEN EXTENSION OF EACH END FITTING AND THAT END FITTINGS ARE VISIBLE THROUGH THE INSPECTION HOLES.
7. ALIGN THE FUEL LINE CLAMP TO PRODUCE THE BEST ASSEMBLY POSITION. AN EVEN GAP BETWEEN THE MALE AND FEMALE PARTS OF THE END CONNECTIONS IS IDEAL.
8. EVENLY TORQUE THE FOUR (4) CLAMP HI-LOKS 8 TO 10 INCH POUNDS OVER THE NUT LOCKING FEATURE REQUIREMENTS
9. ATTACH THE BELLOWS ALIGNMENT TOOL TO THE BELLOWS.
10. EXTEND THE TUBE ASSEMBLIES TO REMOVE END PLAY.
    CAUTION: DO NOT EXTEND THE TUBE ASSEMBLIES PAST THE REMOVAL OF "END PLAY" AS THE RESULTING PRELOAD WILL DISTORT THE BELLOWS WHEN THE BELLOWS ALIGNMENT TOOL IS REMOVED.
11. TORQUE HI-LOKS AT EACH END OF TUBE ASSEMBLIES. PER LSP 14-15306
12. MEASURE THE GAP BETWEEN EACH HALF OF THE CLAMP ON EACH SIDE AND AVERAGE TO DETERMINE SHIM THICKNESS. SHIM THICKNESS ON EACH SIDE TO BE THIS AVERAGE VALUE AND MADE FROM AL. ALLOY QQ-A-250/4 (2024-T3) FINISH #76
13. REMOVE HI-LOKS AND ADD REQUIRED SHIMS
14. BOND CLAMPS TO LINE WITH EC 2216 PER LSP 14-22500 - CURE RANGE I
15. REPLACE FASTENERS PER LSP14-15306.
16. ~~LOCK WIRE EACH END FITTING PER SPEC MS33540 AS APPLICABLE~~
    ~~NOTE: DO NOT REMOVE BELLOWS ALIGNMENT TOOL UNTIL THE LDW280-51886 INSTALLATION HAS BEEN ADDED TO THE ENGINE SIDE OF THE FUEL LINE BELLOWS.~~
17. APPLY LUBRICANT LSM-14-6004 TO THREADS, BODY & FAYING SURFACES OF LDW280M11205 BOLTS PRIOR TO INSTALLATION. WIPE OFF ANY EXCESS AFTER INSTALLATION OF BOLTS.
18. BOND MS16555 TO LDW280M11245-11 PER LSP-14-22602. ALLOW A 1/16-1/32 LONG ADHESIVE PLUG TO REMAIN IN LOWER END OF HOLE THRU LDW280M11245-11.
19. BELLOWS SUPPORT STRUT ADJUSTMENT MAY BE PERFORMED WHILE LINE IS UNDER PRESSURE.
20. INSTALL LOCKWIRE PER MS33540.

NO.	FINISHES	GRUMMAN STD SPEC	MILITARY SPEC NO.
2	CADMIUM PLATE	G. S. S.	
10	ZINC CHROMATE PRIMER	G. S. S.	
15	TINTED PRIMER: 1 COAT	G. S. S.	
76	ALODINE	G. S. S.	
88	ANODIZE	G. S. S.	

SYM	PROCESSES	GRUMMAN STD SPEC	MILITARY SPEC NO.
	AL HEAT TREAT		MIL-H-6088
	MAGNAFLUX		MIL-I-6868
	PENETRANT INSPECTION (ZYGLO)		MIL-I-6866
	THREADING		MIL-S-7742
	STEEL HEAT TREAT PSI ROCKWELL C TO C		

RECORD DRAWINGS AND E.O.'S

MODEL	RECORD DWG NO.	E. O. NO.	MILITARY NO.	APL NO.

MANUFACTURING OPERATIONS

NOTES CHECKED √ APPLY TO THIS DWG.

ALL DIMENSIONS SHOWN TO BE MET AFTER CADMIUM PLATING. THICKNESS OF PLATE .0003 MIN TO .0005 MAX. MIN THICKNESS TO BE .0002 ON THREADED AREAS. NO ALLOWANCE FOR PLATING IN HOLES EXCEPT AS NOTED.	
REMOVE ALL BURRS. BREAK ALL EDGES .015-.031 EXCEPT AS NOTED.	
125√ SURFACE ROUGHNESS INCLUDING REAMED HOLES PER MIL-STD-10 EXCEPT AS NOTED.	
200√ FOR ALL DRILLED HOLES UNLESS OTHERWISE SPECIFIED.	
HOLES MUST BE KEPT FREE OF CHROME PLATING SOLUTION.	
PART NUMBER AND ALL OTHER MARKINGS IN REGION MARKED ⊠ USE BOTH SIDES IF NECESSARY.	
FILLET AND INSIDE CORNER RADII TOLERANCES .016R TO .062R ± .010 .063R TO .250R ± .015 OVER .250R ± .030	
DEPTH SHOWN FOR TAPPED HOLES IS FULL THDS. 2-3 IMP THDS BEYOND PERMISSIBLE.	
EXTERNAL THREAD LENGTH SHOWN INCLUDES 2 IMPERFECT THREADS MAX.	
DO NOT CADMIUM PLATE & PAINT HOLES OR SURFACES MARKED WITH DOUBLE ASTERISK.	
MISMATCH STEP OF ± .005 PERMISSIBLE DUE TO CHANGE OF CUTTERS AT INSIDE INTERSECTING SURFACES.	
DIAMETERS MARKED MUST BE CONCENTRIC WITHIN FULL INDICATOR READING	
INSPECTION INFORMATION MINIMUM PERMISSIBLE AVERAGE EDGE DISTANCE MARKED IS	
SYMBOL ∱ DENOTES SURFACE TO BE MACHINED	
UNLESS OTHERWISE SPECIFIED TOLERANCE ON FLANGES IS ± 1/32	
LENGTHS OF AN. NAS & MS AL ALY RIVETS SHORTER THAN 1 INCH ARE NOT SPECIFIED.	

REVISIONS

REVISION LETTER	ITEM NO.	ZONE	GRUMMAN INFO ONLY / DCRF OR ECP	CLASS II	CLASS I	DET SPEC REQ	ENGRG ORDER IBCC NO.	DESCRIPTION	REVISED BY AND DATE	EFFECTIVE ON MILITARY NUMBER	DISPOSITION OF EXIST PARTS: RE-WORK	SCRAP	ENGRG APPD	GOVT APPD
A	1						EO A1	ON-1 LDW280M11196-15 WAS LDW280M11196-11	GEORGE F. CHANN 11-21-67	LM-1 (31) THRU LM-15 (45)	✓			
	2			✓			EO A2	REMOVED LDW280M11196-11, LDW280M-11205-11 ③ & VS12864-4H ③ ADDED LDW280M11245-11, ③ OF LDW280M11205-15, ③ OF LDW280M11205-13 & LOCKWIRE-MS20995C32		LM-2 (32) THRU LM-15 (45)	✓			
	3						EO A3 LCD-459	REMOVED INSTAL PROCEDURE #16 & CHANGED N/A FROM LDW280-51350, 52350, -53350, -54350 TO LDW280-51001, 52001, 53001 & 54001		LM-1 (31) THRU LM-15 (45)	✓			
	4						EO A4	REF EO A2 ADDED -3, REMOVED LM-2 (32) THRU LM-15 (45) FROM -1		LM-2 (32) THRU LM-15 (45)	✓			
	5						EO A5	REMOVED LM-5 (35) THRU LM-15 (45) FROM -3, ADDED -5 & NOTE #18			✓			
	6			✓			EO A6	REF EO A2, FOR -3 & -5 DELETED LDW280-11592-11 (1)			✓			
	7			✓			LEO-590 LCD-1124	ON -5 ADDED PA-1 (47) REQ'TS		PA-1	NOT	REQD		
	8			✓			EO A8	ADDED NOTE #17		LM-1 (31) THRU LM-15 (45) PA-1 (47)	✓			
	9				✓		LEO280-647 LCD-1422	-3 EFF WAS LM-2 THRU LM-4 -5 EFF WAS LM-5 THRU LM-15 & PA-1		LM-3 (33) THRU LM-15 (45)		✓		
	10				✓		EO-A10 LCD-1894	ADDED NOTE #19		LM-1 (31)	✓		WC	

03703

NAS 9-1100

-5	-3	-1	PART OR IDENTIFYING NO.	I&T	CODE IDENT	NOMENCLATURE OR DESCRIPTION	MATERIAL	GOVT SPEC	COML SPEC	STOCK SIZE (EA)	PROCESS SYMBOL	FINISH NO.	UNIT WT	ZONE
AS REQD	AS REQD	AS REQD	SEE NOTE #12	E		SHIM	STD PART							
AS REQD	AS REQD	AS REQD	MS 20995 C 32	E		LOCK WIRE	STD PART							
	1		LDW280M11245-11	E		FITTING	SEE DWG							
4	4	4	MS16555-617	E		PIN	STD PART							
		1	LDW280M11196-15	A		BRACKET	SEE DWG							
3	3		LDW280M11205-15	E		BOLT	SEE DWG							
4	4	4	GB511P-3-8	E			GAEC STANDARD							
8	8	8	GN512AA-3	E			" "							
4	4	4	GB511P-3-5	E			GAEC STANDARD							
3	3		LDW280M11205-13	E		BOLT	SEE DWG							
3	3	6	LDW280M-11205-11	E		BOLT	SEE DWG							
		2	LDW280-11592-11	E		PLATE								
1	1	1	LDW280M-11196-13	E		BRACKET								
1			LDW280M11245-11-1	E		FITTING								
1	1	1	LDW280M-11184-1	E		CLAMP								
4	4	4	LDW280M-10656-1	E		BUSHING								
2	2	2	LDW280-11564-9	E		TUBE ASSY	SEE DWG							
			LDW280-51888-5	E		SUPPORT INSTL					NONE	NONE		
			LDW280-51888-3	E		SUPPORT INSTL					NONE	NONE		
			LDW280-51888-1	E		SUPPORT INSTL					NONE	NONE		

QTY REQD PER ASSY

MODEL	NEXT ASSY	MODULE NUMBER	NO.	REQD PER MODULE
LM	LTM280-26900	PA-1 (47)		1
PART NO LDW280-51888-5				
LM	LDW280-52001	LM-2 (32)		1
PART NO LDW280-51888-3				
LM	LDW280-51001	LM-1 (31)		1
PART NUMBER LDW280-51888-1			GRUMMAN SCH INFO 30-	

MAY BE REDRAWN ON PRODUCTION FORMAT

3

UNLESS OTHERWISE SPECIFIED DIMENSIONS ARE IN INCHES. TOLERANCE UNLESS SPECIFIED: FRACTIONS - DECIMALS - ANGLES ± 1/32 ± .020 ± 1/2°	DRAWN BY	J GRANDY	GRUMMAN AIRCRAFT ENGRG CORP BETHPAGE, L. I., N. Y.
ORIG DWG AUTH	LAYOUT BY	J GRANDY	SUPPORT INSTALLATION ASCENT STAGE MID SECTION FUEL TANK BELLOWS OUTBOARD
DETAIL SPEC REQUIREMENT	GR. LDR	9/28/66	
CLASS II ENGRG CHANGE	VEH. DES. INT.	9/30	
CLASS I ENGRG CHANGE	STRUCTURE	10-3	CONTRACT NO. NAS 9-1100 DOCUMENTATION TYPE II
LCR 459	STRUCTURE	10-3	CODE IDENT NO. 26512
GRUMMAN REL INFO A	WEIGHTS		SIZE J
PRIM NO 215	PROJ ENGR	10-5	LDW280-51888 A Ⓐ
	Release	10/11/66	SCALE FULL · LINE ITEM 1 · SHEET 1 OF 1

CDR 9/30/66

3FR

LDW280-51888A

LDW280-51888A

DWG. SIZE 34 X

PRINTING INFO ONLY

ENG 32.1 REV 3-65 *

GRUMMAN AIRCRAFT ENGINEERING CORP.
CODE IDENT NO. 26512
ENGINEERING ORDER

DWG. NO. LDW280-51833 | EO NO. A1
CONTROL INFO NO. LM-5-9658

IN FLD & B/M (ON-1)
LDW280M11196-11 (S/B) LDW280M11196-15

5

DETAIL SPEC REQ		CL II ENGRG CHG		CL I ENGRG CHG	

REASON FOR EO: NEW FITTING REQ'D TO PICK. UP HOLES IN TANK COVER

DESCRIPTION OF EO: IN FLD & B/M (ON-1) LDW280M11196-15 (WAS) LDW280M11196-11;

Ⓡ GAEC ✓ EO RELEASE: FR

MODEL	EFFECTIVITY		
	PROCURING ACTIVITY NO.	GAEC UNIT NO.	SUB CONTR UNIT NO.
LM		LM1(31) THRU	
		LM15(45)	

DRAWING CHANGE REQD		DISPOSITION OF PARTS	
✓		✓	
REVISE DWG	RECORD EO	REWORK	SCRAP

APPROVED BY	RVP				JFJ	JFJ	RMc	JR
DATE	12-6-66				11-7-66	11-7-66	11-9-66	11/8/66
1	V01	SUPPORT	RELIAB. GROUP	GROUP LEADER	STRESS GROUP	LIAISON ENGRG	PROJ ENGRG	

PRIORITY	DRAWING TITLE	DRAWING NO.	EO NO.
C	SUPPORT INSTL ASCENT STAGE M/S FUEL TANK BELLOWS OUTBD	LDW280-51888	A1

ISSUED BY LIAISON MDREYES X6452 SECTION V01 / B. PHILLIPS GROUP NO. 335 PL 35

01 NAS 9-1100

GRUMMAN AIRCRAFT ENGINEERING CORP.
CODE IDENT NO. 26512
ENGINEERING ORDER

DWG. NO. LDW280-51888
EO NO. A2
CONTROL INFO NO. LDW280A-3256

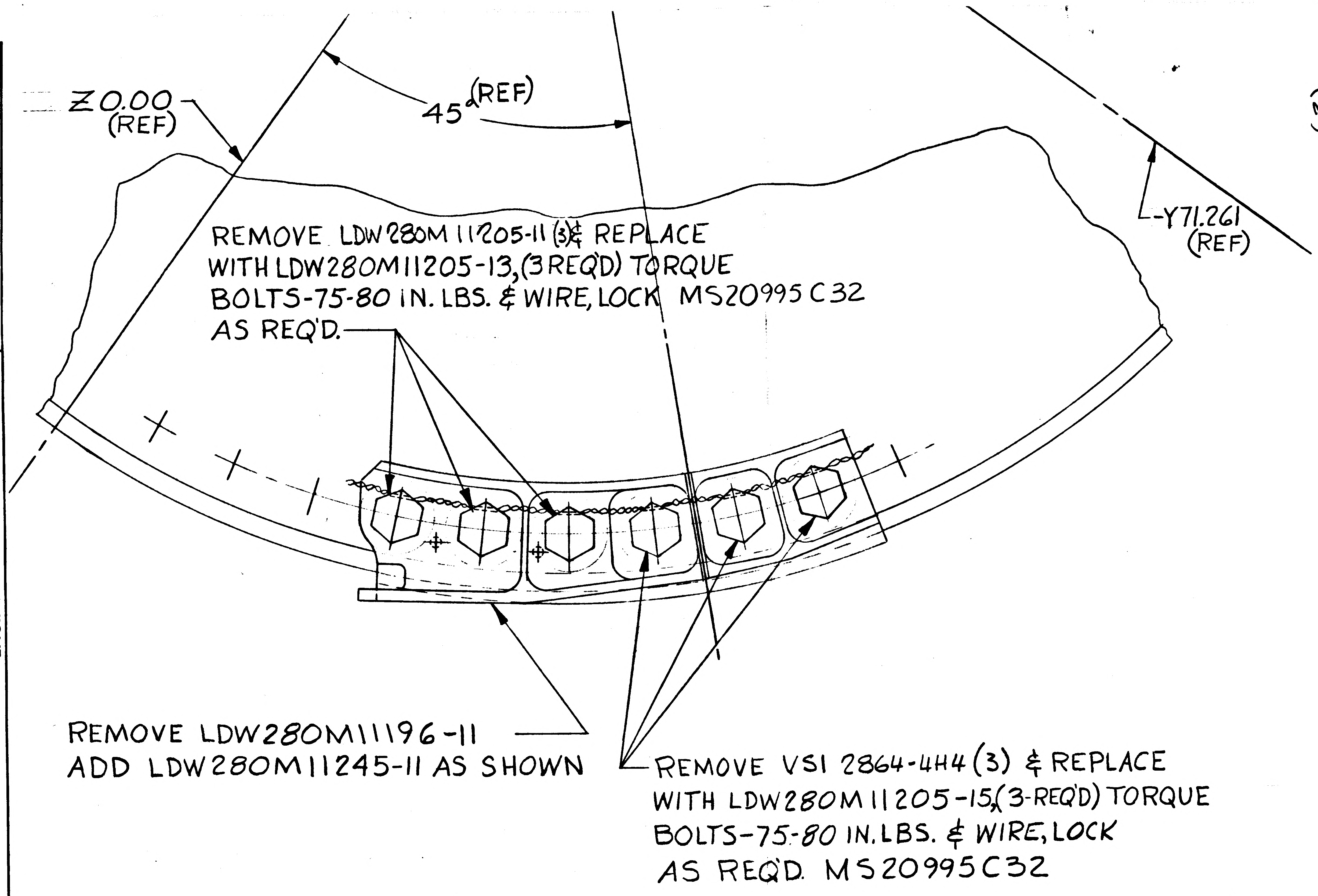

REMOVE LDW280M11205-11 (3) & REPLACE WITH LDW280M11205-13, (3 REQ'D) TORQUE BOLTS-75-80 IN. LBS. & WIRE, LOCK MS20995C32 AS REQ'D.

REMOVE LDW280M11196-11
ADD LDW280M11245-11 AS SHOWN

REMOVE VSI 2864-4H4 (3) & REPLACE WITH LDW280M11205-15, (3-REQ'D) TORQUE BOLTS-75-80 IN. LBS. & WIRE, LOCK AS REQ'D. MS20995C32

ENG 32.2 REV 3-65

(3)

DETAIL SPEC REQ	
CL II ENGRG CHG	✓
CL I ENGRG CHG	
REASON FOR EO	REDESIGNED FITTING FOR INCREASED LOAD.
DESCRIPTION OF EO	IN F/D, B/M, & M/B REMOVED-LDW280M11196-11, LDW280M-11205-11(3) & VSI2864-4H4 (3) ADDED-LDW280M11245-11, (3) OF LDW280M11205-13, (3) OF LDW280M11205-15 & LOCKWIRE-MS20995C32
GAEC EO RELEASE	C (12)

MODEL	PROCURING ACTIVITY NO.	GAEC UNIT NO.	SUB CONTR UNIT NO.
LM		LM-2(32) THRU LM-15(45)	

DRAWING CHANGE REQD	DISPOSITION OF PARTS	APPROVED BY							
REVISE DWG ✓	REWORK ✓								
RECORD EO	SCRAP								
		DATE 11/14/66			11/10	11/15		11-14-66	11-15-66
		#5 VDI	SUPPORT	RELIAB. GROUP	GROUP LEADER	STRESS GROUP	LIAISON ENGRG	PROJ ENGRG	

PRIORITY C
DRAWING TITLE SUPPORT INSTALLATION A/S, M/S. FUEL TANK BELLOWS OUTBOARD
DRAWING NO. LDW280-51888
EO NO. A2

ISSUED BY J. KOSLOSKY x 1441 SECTION V.D.I. GROUP NO. 335 PL 35

01 NAS 9-1100

ENG 32.1 REV 3-65

*

GRUMMAN AIRCRAFT ENGINEERING CORP.
CODE IDENT NO. 26512
ENGINEERING ORDER

DWG. NO. LDW280-51888 | EO NO. A3
CONTROL INFO NO. LDW280 A-3162

1. IN F/D REMOVE INSTALLATION PROCEDURE #16 ("LOCKWIRE--ETC--")

2. IN N/A BLOCK REVISE AS SHOWN:

NOW: 1 OF LDW280-51888-1 REQ'D ON
LDW280-51001 FOR LM-1(31)
LDW280-52001 FOR LM-2(32)
LDW280-53001 FOR LM-3(33)
LDW280-54001 FOR LM-4(34) THRU LM-15(45)

WAS: 1 OF LDW280-51888-1 REQ'D ON
LDW280-51350 FOR LM-1(31)
LDW280-52350 FOR LM-2(32)
LDW280-53350 FOR LM-3(33)
LDW280-54350 FOR LM-4(34) THRU LM-15(45)

DETAIL SPEC REQ	☐	CL II ENGRG CHG	☐	CL I ENGRG CHG	☐	LCR 459 3

REASON FOR EO: LOCKWIRE CALLED OUT ON N/A AND TO REVISE N/A.

DESCRIPTION OF EO: ON-1 REMOVED INSTAL. PROCEDURE #16 FROM F/D, CHANGED N/A FROM LDW280-51350, -52350, -53350, -54350 TO LDW280-51001, -52001, -53001 & -54001.

GAEC EO RELEASE: FC 11/18/66

MODEL	EFFECTIVITY: PROCURING ACTIVITY NO.	EFFECTIVITY: GAEC UNIT NO.	EFFECTIVITY: SUB CONTR UNIT NO.
LM		LM-1(31)	
LM		THRU LM-15(45)	

DRAWING CHANGE REQD: REVISE DWG ✓ | RECORD EO
DISPOSITION OF PARTS: REWORK ✓ | SCRAP

APPROVED BY	P			—	fw		RMC (EO)	
DATE	11/10/66			—	11-11		11-14-66	11/[illegible]/66
6	VDI	SUPPORT	RELIAB. GROUP	~~GROUP LEADER~~	STRESS GROUP	LIAISON ENGRG	PROJ ENGRG	~~SUPV~~

PRIORITY	DRAWING TITLE	DRAWING NO.	EO NO.
C	SUPPORT INSTAL - ASCENT STAGE - MID SECT - FUEL TANK BELLOWS OUTBD	LDW280-51888	A3

ISSUED BY VOLENTINE 11/8/66 X 1441 SECTION VDI. (PHILLIPS) GROUP NO. 335 PL 35

01
NAS 9-1100

ENG 22.1 REV 3-66

GRUMMAN AIRCRAFT ENGINEERING CORP.
CODE IDENT NO. 26512
ENGINEERING ORDER EMF-A

DWG. NO. LDW 280-51888
EO NO. A4
CONTROL INFO NO. LM-5-11491

THIS IS A REVISION OF EO A2

ADD -3 SUPPORT INSTL. SAME AS -1 EXCEPT -3 EFF. LM-2(32) THRU LM-15(45)

REMOVE LM-2(32) THRU LM-15(45) FROM -1

RELEASED BY LIAISON

(6)

DETAIL SPEC REQ	☐	CL II ENGRG CHG	☐	CL I ENGRG CHG	☐

REASON FOR EO: EO A2 PART. CHANGES REQUIRE. CREATION OF NEW INSTL.

DESCRIPTION OF EO: REF. EO A2, ADDED -3, REMOVED LM-2(32) THRU LM-15(45) FROM -1.

GAEC EO RELEASE: C

MODEL	PROCURING ACTIVITY NO.	GAEC UNIT NO.	SUB CONTR UNIT NO.
LM		LM-2(32)	
		THRU	
		LM-15(45)	

DRAWING CHANGE REQD		DISPOSITION OF PARTS	
✓		✓	
REVISE DWG	RECORD EO	REWORK	SCRAP

APPROVED BY	WT			~	PB	JFJ		
DATE	12/22/66			~	12/22	12-22-66	12/28	12-27-66
5	VDI	SUPPORT	RELIAB. GROUP	GROUP LEADER	STRESS GROUP	LIAISON ENGRG	PROJ ENGRG	~~GOVT~~

PRIORITY	DRAWING TITLE	DRAWING NO.	EO NO.
C	SUPPORT INSTL. A/S-M/S~FUEL TANK BELLOWS~OUTBD	LDW280-51888	A4

ISSUED BY A. WILSON / P. GRUND x6454 12-21-66 SECTION VDI GROUP NO. 335 PL 5

01 NAS 9-1100

RELEASED BY LIAISON

GRUMMAN AIRCRAFT ENGINEERING CORP.
CODE IDENT NO. 26512 E4F-A
ENGINEERING ORDER

ENG 32.2 REV 3-65

DWG. NO. LDW280-51388
EO NO. A5
CONTROL INFO NO. LM-5-11530

* = NEXT AVAILABLE NOTE NO.
** = NEXT AVAILABLE SECT. LETTER
I & T=E

REMOVE LM-5(35) THRU LM-15(45) FROM -3

ADD -5 SUPPORT INSTL. SAME AS -3 EXCEPT
-5 EFF LM-5(35) THRU LM-15(45) & N/A LDW280-54001 (1) REQD/MOD.

ON -5 LDW280M11245-11-1 WAS -11.

ADD NOTE * AS FOLLOWS:
"*. BOND MS16555 TO LDW280M11245-11 PER LSP-14-22602.
ALLOW A $\frac{1}{16}$-$\frac{1}{32}$ LONG ADHESIVE PLUG TO REMAIN IN LOWER END OF HOLE THRU LDW280M11245-11.

REVISE F/D AS SHOWN. ADD SECT. **-** FOR -5 ONLY.

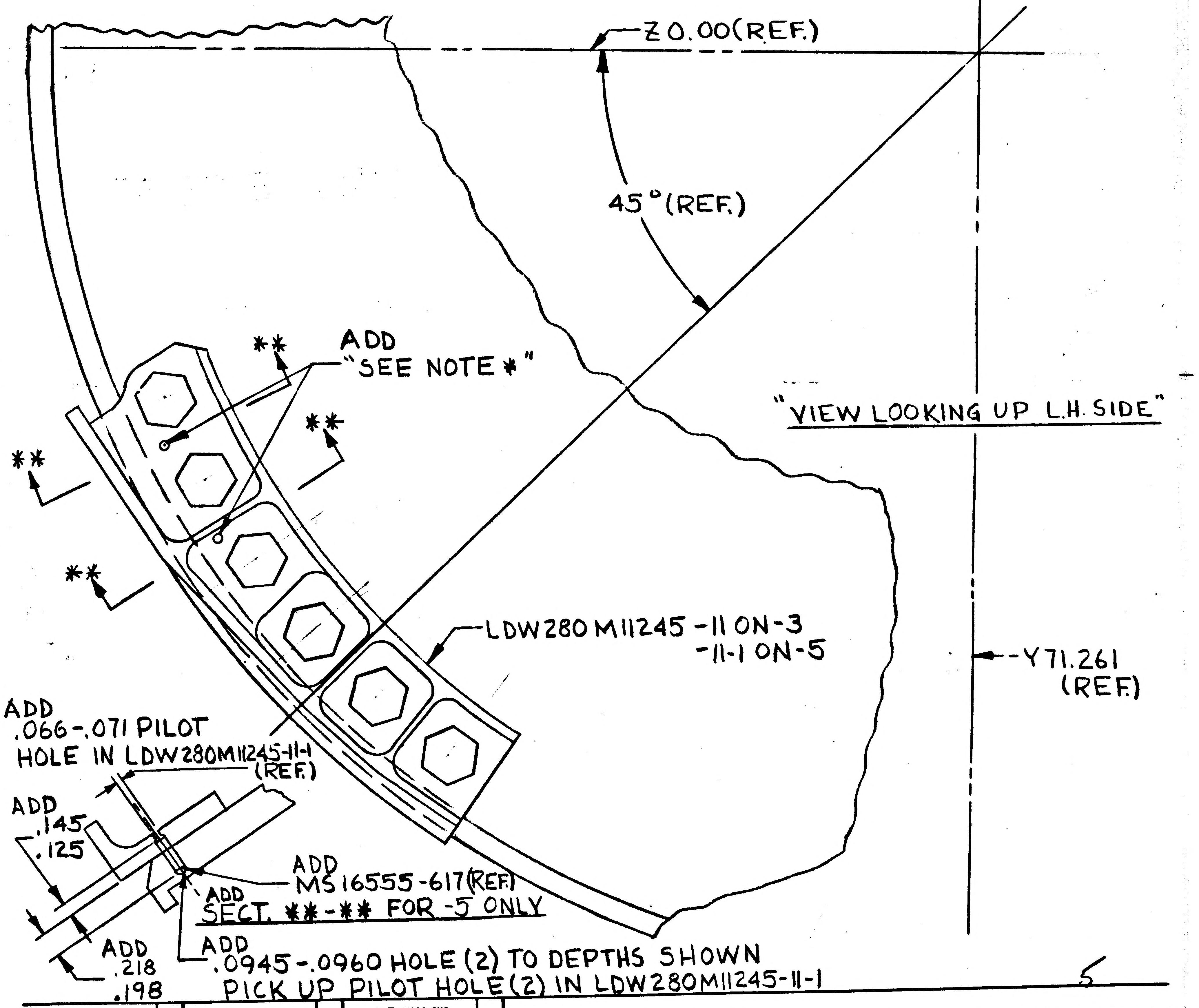
Z0.00(REF.)
45°(REF.)
ADD "SEE NOTE *"
**
**
**
**
"VIEW LOOKING UP L.H. SIDE"
LDW280M11245-11 ON-3
-11-1 ON-5
Y71.261 (REF.)
ADD .066-.071 PILOT HOLE IN LDW280M11245-11-1 (REF.)
ADD .145 .125
ADD MS16555-617(REF.)
ADD SECT. **-** FOR -5 ONLY
ADD .218 .198
ADD .0945-.0960 HOLE (2) TO DEPTHS SHOWN
PICK UP PILOT HOLE (2) IN LDW280M11245-11-1

5

DETAIL SPEC REQ		CL II ENGRG CHG		CL I ENGRG CHG		GAEC C EO RELEASE
REASON FOR EO	TO FACILITATE LOCATING HOLES (2) IN TANK COVER.	DESCRIPTION OF EO	REMOVED LM-5(35) THRU LM-15(45) FROM -3 ADDED -5 & NOTE *.			

MODEL	EFFECTIVITY: PROCURING ACTIVITY NO.	EFFECTIVITY: GAEC UNIT NO.	EFFECTIVITY: SUB CONTR UNIT NO.
LM		LM-2(32)	
		THRU	
		LM-15(45)	

DRAWING CHANGE REQD: REVISE DWG	DRAWING CHANGE REQD: RECORD EO	DISPOSITION OF PARTS: REWORK	DISPOSITION OF PARTS: SCRAP
✓		✓	

		SUPPORT	RELIAB. GROUP	GROUP LEADER	STRESS GROUP	LIAISON ENGRG	PROJ ENGRG	
APPROVED BY	WT			~	NM	DV		
DATE	1/3/66			~	1-3-67	1/3	1-6-67	1/5/67
3	VDI							

PRIORITY	DRAWING TITLE	DRAWING NO.	EO NO.
C	SUPPORT INSTL. A/S~M/S~FUEL TANK BELLOWS~OUT.	LDW280-51888	A5

ISSUED BY A. WILSON/P. GRUND X6454 1-3-67 SECTION VDI GROUP NO. 335 PL 5

01
NAS 9-1100

RD

ENG 32.1 REV 3-65

B

GRUMMAN AIRCRAFT ENGINEERING CORP.
CODE IDENT NO. 26512
ENGINEERING ORDER

*

DWG. NO. LDW280-51888
EO NO. A6
CONTROL INFO NO. LM-2-3445

THIS IS A REVISION OF EO-A2

"ADD" "REMOVE LDW280-11592-11(1)" FROM -3 & -5

DETAIL SPEC REQ	☐	CL II ENGRG CHG	☑	CL I ENGRG CHG	☐	2

REASON FOR EO: INABILITY TO INSTALL PLATE DUE TO REDESIGN. OF FITTING

DESCRIPTION OF EO: REFERENCE EO-A2 IN FLD & B/M, FOR -3 & -5, DELETED LDW280-11592-11(1).

GAEC C EO RELEASE: JS- 3-27-7

02025

MODEL	PROCURING ACTIVITY NO.	GAEC UNIT NO.	SUB CONTR UNIT NO.
LM		LM-2(32)	
		THRU	
		LM-15(45)	

DRAWING CHANGE REQD: REVISE DWG	RECORD EO	DISPOSITION OF PARTS: REWORK	SCRAP
✓		✓	

APPROVED BY		SUPPORT	RELIAB. GROUP	GROUP LEADER	STRESS GROUP	LIAISON ENGRG	PROJ ENGRG	GOVT
DATE					3/23/67	3/23/67	3-27-67	3/23/67
-1-							RHC(E)	

PRIORITY: C

DRAWING TITLE: SUPPORT INSTL~A/S~MID SECTION FUEL TANK BELLOWS~OUTBOARD

DRAWING NO. LDW280-51888

EO NO. A6

ISSUED BY LIAISON J. MALONEY 3/23/67 X3604 SECTION V.D.I. GROUP NO. 335 PL 25

01 NAS 9-1100

B

ENG 32.1 REV 3-65

GRUMMAN AIRCRAFT ENGINEERING CORP.
CODE IDENT NO. 26512
ENGINEERING ORDER

DWG NO LDW280-51888 EO NO A8
CONTROL INFO NO LM5-13476

IN F/D ADD "SEE NOTE *" TO CALLOUTS FOR LDW280M11205-11, -13 & -15

ADD NOTE *: "APPLY LUBRICANT LSM-14-6004 TO THREADS, BODY & FAYING SURFACES OF LDW280M11205 BOLTS PRIOR TO INSTALLATION. WIPE OFF ANY EXCESS AFTER INSTALLATION OF BOLTS."

REWORK INFO: BOLTS ALREADY INSTALLED NEED NOT BE LUBRICATED

RELEASED BY LIAISON

* DENOTES NEXT AVAILABLE NOTE NO. 5

DETAIL SPEC REQ ☐ CL II ENGRG CHG ☑ CL I ENGRG CHG ☐

GAEC EO RELEASE JK

REASON FOR EO: LUBRICATION OF BOLTS REQ'D.

DESCRIPTION OF EO: ADDED NOTE *

MODEL	PROCURING ACTIVITY NO.	GAEC UNIT NO.	SUB CONTR UNIT NO.
LM		LM-1(31)	
		THRU LM-15(45)	
		PA-1(47)	

DRAWING CHANGE REQD: REVISE DWG ✓ RECORD EO ☐
DISPOSITION OF PARTS: REWORK ✓ SCRAP ☐

APPROVED BY	WT			~	JF	EWB		
DATE	6/2/67			~	6-5-67	6/3/67	6-21-7	6/7/67
1	VDI	SUPPORT	RELIAB. GROUP	GROUP LEADER	STRESS GROUP	LIAISON ENGRG	PROJ ENGRG	

PRIORITY C
DRAWING TITLE: SUPPORT INST'N A/S, MIDSECTION FUEL TANK BELLOWS, OUTBOARD
DRAWING NO. LDW280-51888
EO NO. A8

ISSUED BY F. WOLFF X1153 / TRAUT
SECTION VDI
GROUP NO. 335
PL 25

01
NAS 9-1100

ENG 32.2 REV 3-65

E.R.

GRUMMAN AIRCRAFT ENGINEERING CORP.
CODE IDENT NO. 26512
ENGINEERING ORDER

DWG. NO. LEO 280 | EO NO. 647
CONTROL INFO NO. LDW280A7624

FOR THE FOLLOWING DRAWINGS WITH DASH NO.'S NOTED~
** ~REVISE THE EFFECTIVITY, DELETE~*, DWG. TITLE~⧗

DRAWING NO.	DASH NO.*	NEXT ASSEMBLY	CHG. NO.	QUAN.	EFF. SHD BE	EFF. WAS**
LDW280-11259	-17,-19	LDW280-53202	A6	1 EA.	~	LM-3 THRU LM-15
LDW280-11539	-17,-13,-15	LDW280-53206	B2	1 EA.	~	LM-3 THRU LM-15
LDW280-11550	-9	LDW280-11564	A4	2	LM-1, LM-2 & PA-1	LM-1 THRU LM-15 & PA-1
LDW280-11550	-11,-13	LDW280-11564		1 EA	PA-1, LM-2	LM-3 THRU LM15 & PA-1
LDW280-11550	-5,-7	LDW280-11564		1 EA	PA-1, LM-1 & LM2	LM-1 THRU LM15, PA-1
LDW280-11576	-11	LDW280-53171	A3	1	~	LM-3 THRU LM-15
LDW280-11588	-11	LDW280-53886	A1	1	~	LM-3 THRU LM-15
LDW280-11703	-11	LDW280-53206	A1	1	~	LM-3 THRU LM-15
LDW280M11180	-1	LDW280-53206	A3		~	LM-3
LDW280M11180	-1	LDW280-54206		1	~	LM-4 THRU LM-15
LDW280M10951	-1	LDW280-53171	A6	1	~	LM-3 THRU LM-15
LDW280M10953	-1	LDW280-53206	A3	1	~	LM-3 THRU LM-15
LDW280M11179	-13	LDW280-53206	A5	1	~	LM-3 THRU LM-15
				1		
LDW280M11184	-1	LDW280-51888	A2	1	LM-1 & LM-2 & PA-1	LM-1 THRU LM-15, PA-1
LDW280M11185	-1,-3	LDW280-11564	C3	6 EA	LM-1 & LM-2, PA-1	LM-1 THRU LM-15, PA-1
LDW280M11190	-1,-3	LDW280-11564	B3	6 EA	PA-1, LM-1 & LM2	LM-1 THRU LM-15, PA-1
LDW280M11191	-11,-13	LDW280-11564	A6	6 EA	PA-1, LM-1 & LM2	LM-1 THRU LM-15, PA-1
LDW280M11196	-13	LDW280-51888	B3	1	PA-1, LM-1 & LM-2	LM-1 THRU LM-15 & PA-1
LDW280M11197	-1	LDW280-53886	A2	1	~	LM-3 THRU LM-15.
LDW280M11205	-11	LDW280-51888	A5	3	PA-1, LM-1 & LM-2	LM-1 THRU LM-15, PA-1
LDW280M11205	-13	LDW280-51888		3	PA-1 & LM-2	LM-2 THRU LM-15, PA-1
LDW280M11205	-15	LDW280-51888		3	LM-1 & LM-2	LM-1 THRU LM-15
LDW280-51888	-3	LDW280-53001	A9	1	LM-2	LM-2 THRU LM-4
LDW280-51888	-5	LDW280-54001		1	PA-1	LM-5 THRU LM-15 & PA-1
LDW280M11245	-11	LDW280-51888	A5	1	LM-2	LM-2 THRU LM-4
LDW280M11245	-11-1	LDW280-51888		1	PA-1	LM-5 THRU LM-15, PA-1

⧗ ~ FOR DRAWING TITLE ~ SEE DRAWING

LEO No. WAS 280-643

DETAIL SPEC REQ ☐ CL II ENGRG CHG ☐ CL I ENGRG CHG ☑ LCD-1422 5

REASON FOR EO	DESCRIPTION OF EO	GAEC C EO RELEASE
FUEL LINES REVISED~ DUE TO ENG. ROTATION	FOR: DASH NO.'S * ~DELETED PART FOR: ** ~REVISED NEXT ASSEMBLY	JL 28 67

MODEL	PROCURING ACTIVITY NO.	GAEC UNIT NO.	SUB CONTR UNIT NO.
LM		NOTED ABOVE	

DRAWING CHANGE REQD: REVISE DWG	RECORD EO	DISPOSITION OF PARTS: REWORK	SCRAP
✓			*

	VDI	SUPPORT	RELIAB. GROUP	GROUP LEADER	STRESS GROUP	LIAISON ENGRG	PROJ ENGRG	
APPROVED BY								
DATE	6/28/67			6/28/67	6-29		6/29/67	7-7-67

PRIORITY	DRAWING TITLE	DRAWING NO.	EO NO.
C	⧗ NOTED ABOVE	LEO-280	647

ISSUED BY CMGREEN X7036 26 JUNE '67 SECTION VEH. DES. INT. GROUP NO. 335 PL 25

01 NAS 9-1100

ENG 32.1 REV 3-65

GRUMMAN AIRCRAFT ENGINEERING CORP.
CODE IDENT NO. 26512
ENGINEERING ORDER

DWG. NO. LDW 280-51888
EO NO. A10
CONTROL INFO NO. LM83-2146

IN F/D, ADD FOLLOWING TO INSTALLATION PROCEDURE:

BELLOWS SUPPORT STRUT ADJUSTMENT MAY BE PERFORMED WHILE LINE IS UNDER PRESSURE.

DETAIL SPEC REQ		CL II ENGRG CHG		CL I ENGRG CHG	✓ LCD 1894

83

REASON FOR EO: ADJUST BELLOWS TO SATISFY ALIGNMENT CRITERIA

DESCRIPTION OF EO: ADD TO INSTALLATION PROCEDURE: BELLOWS SUPPORT STRUT ADJUSTMENT MAY BE PERFORMED WHILE LINE IS UNDER PRESSURE

GAEC EO RELEASE: JK 11/15/

MODEL	EFFECTIVITY: PROCURING ACTIVITY NO.	GAEC UNIT NO.	SUB CONTR UNIT NO.
LM		LM-1 (31)	

DRAWING CHANGE REQD: REVISE DWG ✓ · RECORD EO
DISPOSITION OF PARTS: REWORK ✓ · SCRAP

	SYS.	SUPPORT	RELIAB. GROUP	GROUP LEADER	STRESS GROUP	LIAISON ENGRG	PROJ ENGRG	
APPROVED BY						ES PG	Plunkett	
DATE	10/26	11/11/67		10/28	11/3/67	BPA	30 Oct	10-31

PRIORITY: C
DRAWING TITLE: SUPPORT INSTL ASCENT STAGE M/S FUEL TANK BELLOWS OUTBD
DRAWING NO. LDW 280-51888
EO NO. A10

ISSUED BY R. ENGLENART SECTION PROJ ENG, KSC GROUP NO. 816 PL 83 K

01

NAS 9-1100

ENG 32.1 REV 3-65

GRUMMAN AIRCRAFT ENGINEERING CORP.
CODE IDENT NO. 26512
ENGINEERING ORDER

DWG. NO. LDW280-51888
EO NO. B1
CONTROL INFO NO. LDW280B1030

IN MOD. BLOCK FOR-1 & -3 INSTALLATIONS:

(-1) FOR LM-1 (31): N/A LDW280-51350 WAS LDW280-51001 (QUANTITY THE SAME)
(-3) FOR LM-2 (32): N/A LDW280-52350 WAS LDW280-52001 (QUANTITY THE SAME)

DETAIL SPEC REQ ☑ CL II ENGRG CHG ☐ CL I ENGRG CHG ☐

(5) (B)

REASON FOR EO: TO CORRECT NEXT ASSEMBLIES. (CDR LIST)

DESCRIPTION OF EO:
FOR -1: N/A LDW280-51350 WAS LDW280-51001
FOR -3: N/A LDW280-52350 WAS LDW280-52001

GAEC EO RELEASE: VC 1/5/68

MODEL	PROCURING ACTIVITY NO.	GAEC UNIT NO.	SUB CONTR UNIT NO.
LM		NOT REQD	

DRAWING CHANGE REQD: REVISE DWG	RECORD EO	DISPOSITION OF PARTS: REWORK	SCRAP
✓		NOT REQD	

		SUPPORT	RELIAB. GROUP	GROUP LEADER	STRESS GROUP	LIAISON ENGRG	PROJ ENGRG	
APPROVED BY								
DATE	1/3/68			1-3-68	1-3-68		1/4/68	1-4-68
	VDI							

PRIORITY: E
DRAWING TITLE: A/S M/S, SUPPORT INSTALLATION FUEL TANK BELLOWS - OUTB'D.
DRAWING NO.: LDW280-51888
EO NO.: B1

ISSUED BY F. BADE X7033 SECTION VEH. DES. INT GROUP NO. 335 PL 25

01

NAS 9-1100

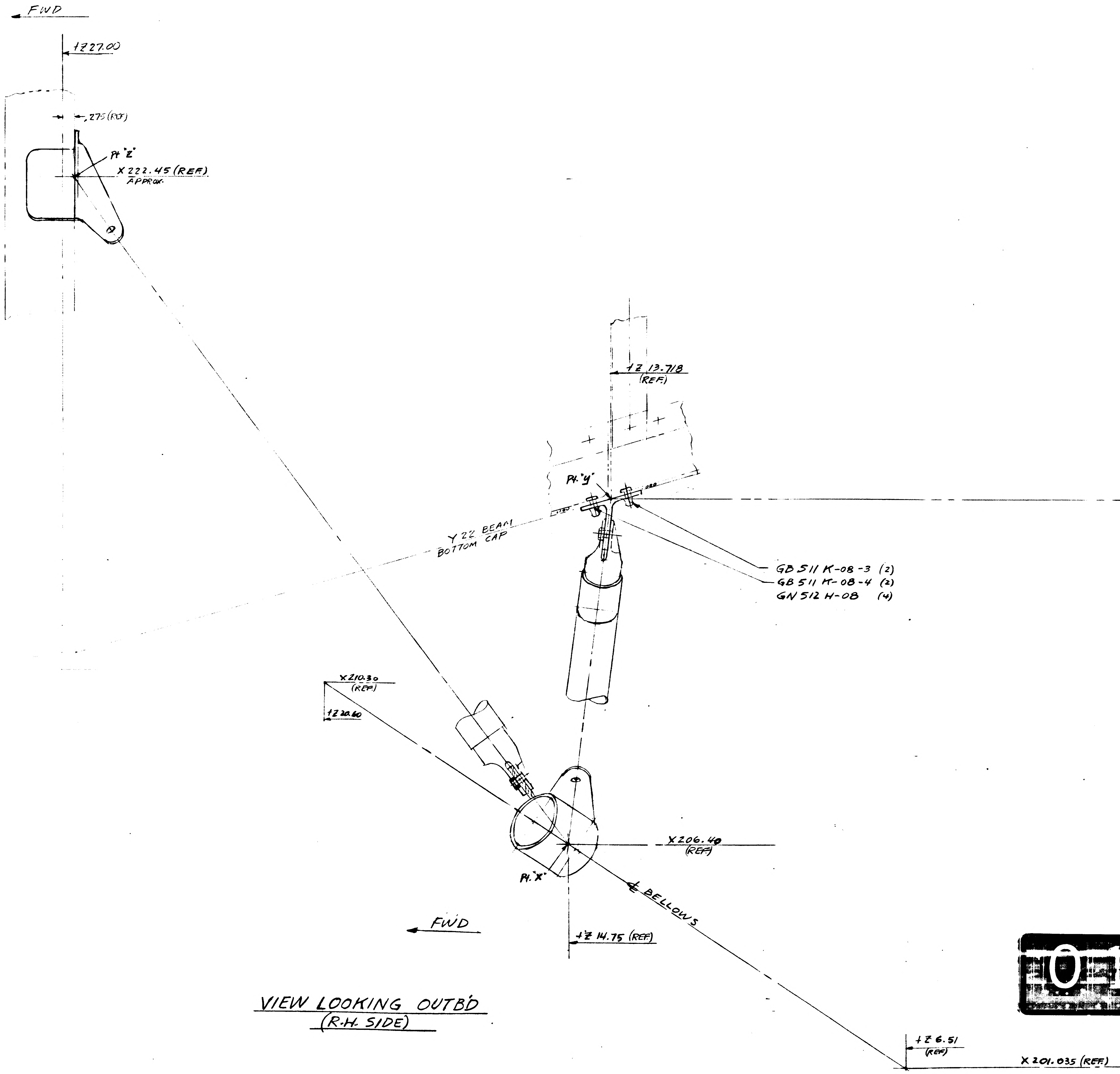
FWD
+Z27.00
.275 (REF)
Pt "Z"
X222.45 (REF)
APPROX.
+Z 13.718
(REF.)
Pt. "y"
Y22 BEAM
BOTTOM CAP
GB 511 K-08-3 (2)
GB 511 K-08-4 (2)
GN 512 H-08 (4)
X210.30
(REF)
+Z20.60
X206.40
(REF)
Pt. "X"
℄ BELLOWS
FWD
+Z 14.75 (REF)
+Z 6.51
(REF)
X201.035 (REF)

VIEW LOOKING OUTB'D
(R.H. SIDE)

01/03 NAS 9-1100

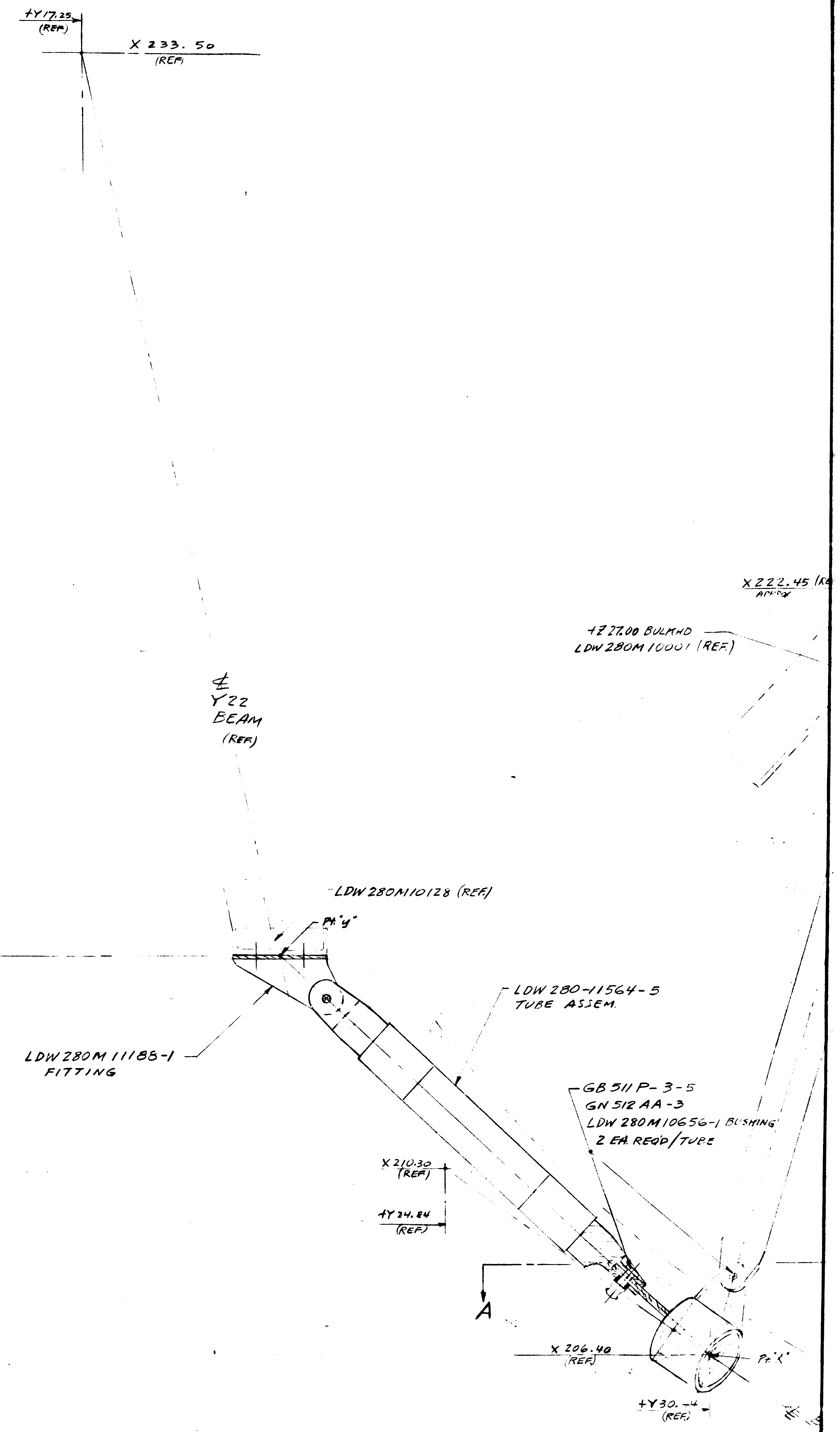
+Y17.25
(REF)
X 233.50
(REF)
X222.45 (RE
APPROX
+Z27.00 BULKHD
LDW280M10001 (REF.)
℄
Y22
BEAM
(REF)
LDW280M10128 (REF.)
Pt. "y"
LDW 280-11564-5
TUBE ASSEM.
LDW280M11188-1
FITTING
GB 511 P-3-5
GN 512 AA-3
LDW 280M10656-1 BUSHING
2 EA. REQ'D/TUBE
X210.30
(REF)
+Y24.84
(REF.)
A
X 206.40
(REF.)
Pt. "X"
+Y30.-4
(REF.)

LDW280-51590-1 INSTL

VIEW LOOKING FWD
(R.H. SIDE)

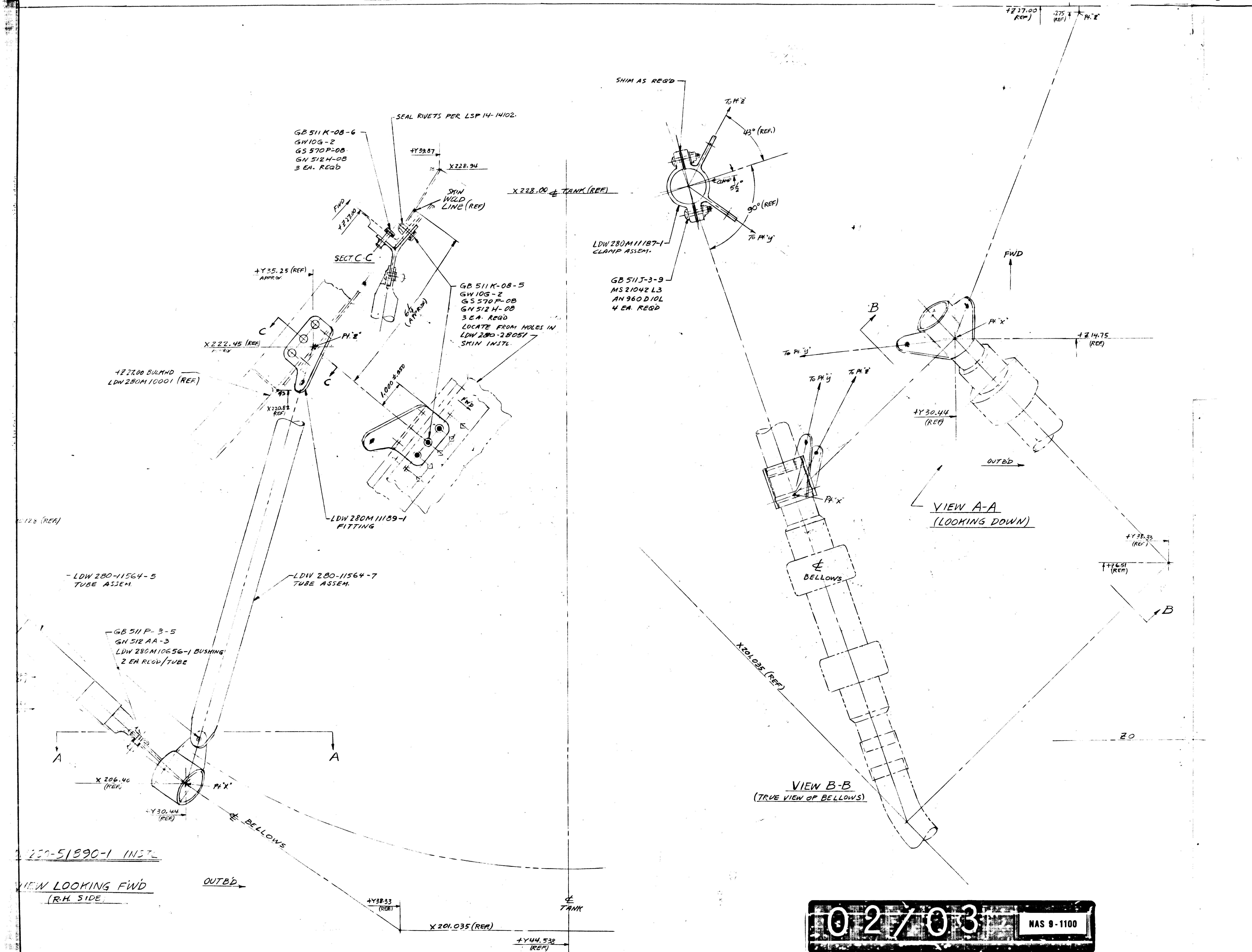
+Z 27.00 (REF)
.275 (REF)
Pt "Z"
SHIM AS REQ'D
To Pt "Z"
43° (REF.)
℄ CLAMP
5½°
90° (REF)
To Pt "y"
LDW 280M11187-1 CLAMP ASSEM.
GB 511J-3-9
MS 21042 L3
AN 960 D 10L
4 EA. REQ'D
X 228.00 ℄ TANK (REF)
SEAL RIVETS PER LSP 14-14102.
GB 511K-08-6
GW10G-2
GS 570P-08
GN 512H-08
3 EA. REQ'D
+Y 39.87
X 228.94
SKIN WELD LINE (REF)
FWD
+Z 27.00
SECT C-C
+Y 35.25 (REF) APPROX
GB 511K-08-5
GW 10G-2
GS 570P-08
GN 512H-08
3 EA. REQ'D
LOCATE FROM HOLES IN LDW 280-28051 SKIN INSTL
6¼ (APPROX)
C
X 222.45 (REF) APPROX
Pt "Z"
1.000 ±.050
FWD
+Z 27.00 BULKHD LDW 280M10001 (REF)
.43
X 220.82 REF
LDW 280M11189-1 FITTING
X 128 (REF)
LDW 280-11564-5 TUBE ASSEM.
LDW 280-11564-7 TUBE ASSEM.
GB 511P-3-5
GN 512AA-3
LDW 280M10656-1 BUSHING
2 EA REQD/TUBE
A
A
X 206.40 (REF)
Pt "X"
+Y 30.44 (REF)
℄ BELLOWS
220-51890-1 INSTL
VIEW LOOKING FWD (R.H. SIDE)
OUTBD
+Y 38.33 (REF)
X 201.035 (REF)
℄ TANK
+Y 44.538 (REF)
B
Pt "X"
To Pt "y"
+Z 14.75 (REF)
To Pt "y"
To Pt "Z"
FWD
+Y 30.44 (REF)
Pt "X"
OUTBD
VIEW A-A (LOOKING DOWN)
+Y 38.33 (REF)
+Z 6.51 (REF)
℄ BELLOWS
B
X 201.035 (REF)
Z0
VIEW B-B (TRUE VIEW OF BELLOWS)

02/03 NAS 9-1100

NO.	FINISHES	GRUMMAN STD SPEC	MILIT SPEC
2	CADMIUM PLATE	G. S. S.	
10	ZINC CHROMATE PRIMER	G. S. 3.	
15	TINTED PRIMER: 1 COAT	G. S. S	
76	ALODINE	G. S. S	
80	ANODIZE	G. S. S.	

SYM	PROCESSES	GRUMMAN STD SPEC	MILIT SPEC
	AL HEAT TREAT		MIL-H-60
	MAGNAFLUX		MIL-I-686
	PENETRANT INSPECTION (ZYGLO)		MIL-I-686
	THREADING		MIL-S-77
	STEEL HEAT TREAT PSI ROCKWELL C TO C		

INSTALLATION PROCED

1 INSTALL CLAMP L
ENGAGING THE
JOINING THE INBOA
2 TIGHTEN FOUR (4) B
CLAMP HOLES POS
BY HAND. POSIT
3 RETRACT THE ENDS
EVENLY AND BOLT
ON Z 27.00 BULKHE
4 TURN THE TUBE O
THE APPROPRIATE
UNTIL THE HOLE I
5. INSTALL HARDWARE
.6 REPEAT THIS OPER
TUBE ASSEM, BOLTIN
FITTING ON +Y22
ON THE 0X LINE CL
NOTE- WHEN IN
CERTAIN "TURNBUCKLE
OF EACH FITTING &

MANUFACTURING OPERATIONS	
NOTES CHECKED ✓ APPLY TO THIS DWG.	
ALL DIMENSIONS SHOWN TO BE MET AFTER CADMIUM PLATING. THICKNESS OF PLATE .0003 MIN TO .0005 MAX. MIN THICKNESS TO BE .0002 ON THREADED AREAS. NO ALLOWANCE FOR PLATING IN HOLES EXCEPT AS NOTED.	
REMOVE ALL BURRS. BREAK ALL EDGES .015-.031 EXCEPT AS NOTED.	
125 SURFACE ROUGHNESS INCLUDING REAMED HOLES PER MIL-STD-10 EXCEPT AS NOTED.	✓
200 FOR ALL DRILLED HOLES UNLESS OTHERWISE SPECIFIED.	✓
HOLES MUST BE KEPT FREE OF CHROME PLATING SOLUTION.	
PART NUMBER AND ALL OTHER MARKINGS IN REGION MARKED ⊠ USE BOTH SIDES IF NECESSARY.	
FILLET AND INSIDE CORNER RADII TOLERANCES .016R TO .062R ± .010 .063R TO .250R ± .015 OVER .250R ± .030	
DEPTH SHOWN FOR TAPPED HOLES IS FULL THDS. 2-3 IMP THDS BEYOND PERMISSIBLE.	
EXTERNAL THREAD LENGTH SHOWN INCLUDES 2 IMPERFECT THREADS MAX.	
DO NOT CADMIUM PLATE & PAINT HOLES OR SURFACES MARKED WITH DOUBLE ASTERISK.	
MISMATCH STEP OF ± .005 PERMISSIBLE DUE TO CHANGE OF CUTTERS AT INSIDE INTERSECTING SURFACES.	
DIAMETERS MARKED MUST BE CONCENTRIC WITHIN FULL INDICATOR READING	
INSPECTION INFORMATION MINIMUM PERMISSIBLE AVERAGE EDGE DISTANCE MARKED IS	
SYMBOL ƒ DENOTES SURFACE TO BE MACHINED	
UNLESS OTHERWISE SPECIFIED TOLERANCE ON FLANGES IS ± 1/32	

MODEL	NEXT ASSY	MODULE
PART NO.		GRUMMAN SCH INFO

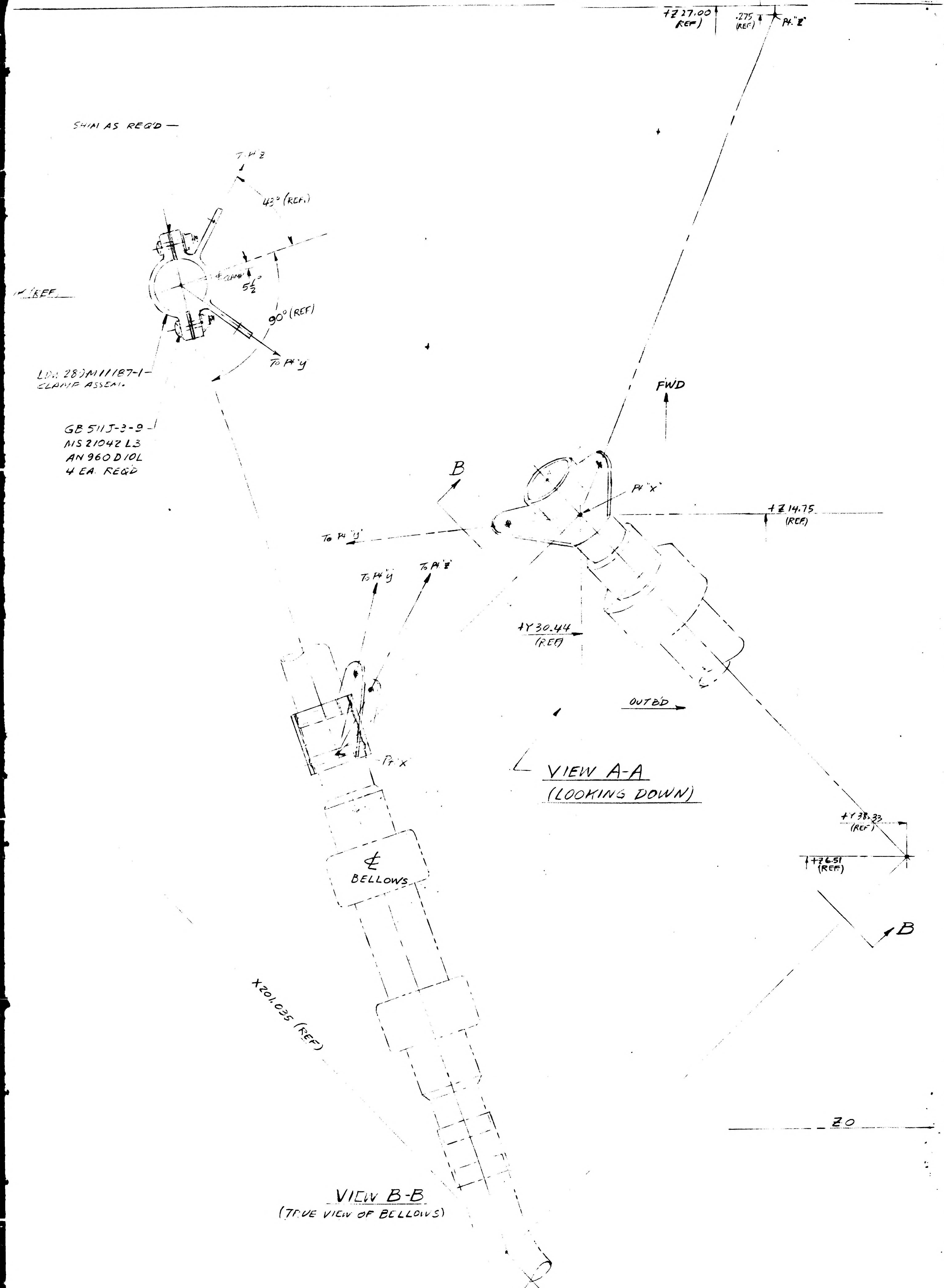

VIEW A-A
(LOOKING DOWN)

VIEW B-B
(TRUE VIEW OF BELLOWS)

NO.	FINISHES	GRUMMAN STD SPEC	MILITARY SPEC NO.
2	CADMIUM PLATE	G. S. S.	
10	ZINC CHROMATE PRIMER	G. S. S.	
15	TINTED PRIMER: 1 COAT	G. S. S.	
76	ALODINE	G. S. S.	
88	ANODIZE	G. S. S.	

SYM	PROCESSES	GRUMMAN STD SPEC	MILITARY SPEC NO.
	AL HEAT TREAT		MIL-H-6088
	MAGNAFLUX		MIL-I-6868
	PENETRANT INSPECTION (ZYGLO)		MIL-I-6866
	THREADING		MIL-S-7742
	STEEL HEAT TREAT PSI ROCKWELL C TO C		

RECORD E. O.'s

MODEL	E O NUMBER	MODULE NO.

REVISIONS

REVISION LETTER	ITEM NO.	ZONE	AUTHORITY FOR REVISION: GRUMMAN INFO ONLY / DCRF OR ECP	CLASS II	CLASS I	DET SPEC REQ	ENGRG ORDER	DESCRIPTION	REVISED BY AND DATE	EFFECTIVE ON MODULE NUMBER	DISPOSITION OF EXIST PARTS: RE-WORK	SCRAP	ENGRG APPD	GOVT APPD

DWG. SIZE 28 X

PRINTING INFO ONLY

INSTALLATION PROCEDURE

1 INSTALL CLAMP LDW 280M11187-1 TO OX LINE ENGAGING THE RING ON BRAZED COUPLING JOINING THE INBOARD END OF BELLOWS TO LINE.
2 TIGHTEN FOUR (4) BOLTS ON CLAMP UNTIL THE CLAMP HOLDS POSITION AFTER BEING ROTATED BY HAND. POSITION AS SHOWN ON VIEW W-W.
3 RETRACT THE ENDS ON LDW280-11564-7 TUBE ASSEM. EVENLY AND BOLT ONE END TO THE FITTING ON Z 27.00 BULKHEAD ~ FINGER TIGHT.
4 TURN THE TUBE OF THE TUBE ASSEM, WHILE ENGAGING THE APPROPRIATE TANG ON THE OX LINE CLAMP, UNTIL THE HOLE IN END ALIGNS WITH HOLE IN TANG.
5. INSTALL HARDWARE AND SECURE FINGER TIGHT.
.6 REPEAT THIS OPERATION WITH THE LDW280-11564-5 TUBE ASSEM, BOLTING THE INBOARD END TO THE FITTING ON +Y22 BEAM AND OUTBOARD END TO TANG ON THE OX LINE CLAMP.
NOTE- WHEN INSTALLING TUBE ASSEMBLIES, MAKE CERTAIN "TURNBUCKLE ACTION" PRODUCES AN EVEN EXTENSION OF EACH FITTING & THAT END FITTINGS ARE VISIBLE THRU INSPEC. HOLES.
7 ALIGN THE OX LINE CLAMP TO PRODUCE THE BEST TUBE ASSEM. POSITION. AN EVEN GAP BETWEEN THE MALE & FEMALE PARTS OF THE END CONNECTIONS IS IDEAL.
8 EVENLY TORQUE THE (4) CLAMP BOLTS 3-10 IN# OVER THE NUT LOCKING FEATURE REQM
9 ATTACH THE BELLOWS ALIGNMENT TOOL.
10 EXTEND THE TUBE ASSEMBLIES TO REMOVE END PLAY.
CAUTION: DO NOT EXTEND THE TUBE ASSEMBLIES PAST THE REMOVAL OF "END PLAY" AS THE RESULTING PRELOAD WILL DISTORT THE BELLOWS WHEN THE BELLOWS ALIGNMENT TOOL IS REMOVED.
11 TORQUE BOLTS AT EACH END OF TUBE ASSEMBLIES 25-30 IN#.
12 MEASURE THE GAP BETWEEN EACH HALF OF THE CLAMP ON EACH SIDE AND AVERAGE TO DETERMINE SHIM THICKNESS. SHIM THICKNESS ON EACH SIDE TO BE THIS AVERAGE VALUE AND MADE FROM AL. ALLOY QQ-A-250/4 (2024-T3), FINISH #76.
13 REMOVE BOLTS AND ADD REQUIRED SHIMS.
14 BOND CLAMPS TO LINE WITH EC 2216 PER LSP14-22500, CURE RANGE I.
15 REPLACE CLAMP BOLTS WITH FINAL TORQUE OF 25-30 IN#.
.16 LOCKWIRE EACH END FITTING PER SPEC. M[illegible] 3[illegible]540. AS APPLICABLE

MANUFACTURING OPERATIONS	
NOTES CHECKED ✓ APPLY TO THIS DWG.	
ALL DIMENSIONS SHOWN TO BE MET AFTER CADMIUM PLATING. THICKNESS OF PLATE .0003 MIN TO .0005 MAX. MIN THICKNESS TO BE .0002 ON THREADED AREAS. NO ALLOWANCE FOR PLATING IN HOLES EXCEPT AS NOTED.	
REMOVE ALL BURRS. BREAK ALL EDGES .015-.031 EXCEPT AS NOTED.	
125 SURFACE ROUGHNESS INCLUDING REAMED HOLES PER MIL-STD-10 EXCEPT AS NOTED.	✓
200 FOR ALL DRILLED HOLES UNLESS OTHERWISE SPECIFIED.	✓
HOLES MUST BE KEPT FREE OF CHROME PLATING SOLUTION.	
PART NUMBER AND ALL OTHER MARKINGS IN REGION MARKED ⊠ USE BOTH SIDES IF NECESSARY.	
FILLET AND INSIDE CORNER RADII TOLERANCES .016R TO .062R ± .010 .063R TO .250R ± .015 OVER .250R ± .030	
DEPTH SHOWN FOR TAPPED HOLES IS FULL THDS. 2-3 IMP THDS BEYOND PERMISSIBLE.	
EXTERNAL THREAD LENGTH SHOWN INCLUDES 2 IMPERFECT THREADS MAX.	
DO NOT CADMIUM PLATE & PAINT HOLES OR SURFACES MARKED WITH DOUBLE ASTERISK.	
MISMATCH STEP OF ± .005 PERMISSIBLE DUE TO CHANGE OF CUTTERS AT INSIDE INTERSECTING SURFACES.	
DIAMETERS MARKED MUST BE CONCENTRIC WITHIN FULL INDICATOR READING	
INSPECTION INFORMATION MINIMUM PERMISSIBLE AVERAGE EDGE DISTANCE MARKED IS	
SYMBOL ∫ DENOTES SURFACE TO BE MACHINED	
UNLESS OTHERWISE SPECIFIED TOLERANCE ON FLANGES IS ± 1/32	

03/03 NAS 9-1100

QTY REQ'D PER ASSY -1	PART OR IDENTIFYING NO.	I & T	CODE IDENT	NOMENCLATURE OR DESCRIPTION	MATERIAL	GOVT SPEC	COML SPEC	STOCK SIZE (EA)	PROCESS SYMBOL	FINISH NO.	UNIT WT	ZONE
4	AN 960 D10L	E		WASHER	STD. PART							
4	MS 21042 L3			NUT	STD. PART							
6	GW10G-2			WASHER								
6	GS 570P-08			STAT-O-SEAL								
6	GN 512H-08			COLLAR								
4	GN 512 AA-3			COLLAR								
4	GB 511P-3-5			BOLT	GRUMMAN STD.							
3	GB 511K-08-6			BOLT								
3	GB 511K-08-5			BOLT								
2	GB 511K-08-4			BOLT								
2	GB 511K08-3			BOLT								
4	GB 511J-3-9			BOLT								
1	LDW280-11564-7			TUBE ASSEM.								
1	LDW280-11564-5			TUBE ASSEM.								
1	LDW280M11189-1			FITTING	SEE DWG							
1	LDW280M11188-1			FITTING								
1	LDW280M11187-1			CLAMP ASSEM								
4	LDW 280M10656-1			BUSHING								
	LDW 280-51890-1	E		SUPPORT INSTL.								

MAY BE REDRAWN ON PRODUCTION FORMAT

MODEL	NEXT ASSY	MODULE NO.	REQ'D PER MODULE
LM	LDW 280-52002	LM-2 (32)	1
LM	LDW 280-51002	LM-1 (31)	1

PART NO. LDW 280-51890-1

GRUMMAN SCH INFO

UNLESS OTHERWISE SPECIFIED DIMENSIONS ARE IN INCHES TOLERANCE UNLESS SPECIFIED FRACTIONS - DECIMALS - ANGLES
± 1/32, ±.010, ± 1/2°

DRAWN BY	P. Torraco	9/4/6
CHECKED BY		
LAYOUT BY	P. Torraco	9/4/6
GRP LDR	[illegible]	
VEH DES	[illegible]	
STRUCTURES	[illegible]	10-1
STRUCTURES	[illegible]	
WEIGHTS	[illegible]	
PROJECT	R. McCarlee	10-1
RELEASE	[illegible]	

ORIG DWG AUTH
DETAIL SPEC REQUIREMENT
CLASS II ENGRG CHANGE
CLASS I ENGRG CHANGE
GRUMMAN REL INFO
PRIM. NO. Z (001)
215 10-3-6

GRUMMAN AIRCRAFT ENGRG CORP
BETHPAGE, L. I., N. Y.

SUPPORT INSTL
ASCENT-MID SECT-OXIDIZER
TANK BELLOWS INBOARD

CONTRACT NO. NAS 9-1100 DOCUMENTATION TYPE II

CODE IDENT NO. 26512 SIZE H LDW 280-51890

SCALE FULL LINE ITEM #1 SHEET 1 OF 1

CDR 10-3-66

LDW 280-51890

LDW 280-51890

ENG 32.1 REV 3-65 *

GRUMMAN AIRCRAFT ENGINEERING CORP.
CODE IDENT NO. 26512
ENGINEERING ORDER

DWG. NO. LDW280-51890 EO NO. A1
CONTROL INFO NO. LDW 280A-0878

ON -1, ADDED 1 REQ'D/MODULE FOR
LM-3(33) N/A LDW 280-53002
LM-4(34 THRU LM-15(45) } N/A LDW 280-54002

DETAIL SPEC REQ		CL II ENGRG CHG		CL I ENGRG CHG	3

REASON FOR EO: ADD ADDITIONAL REQMTS

DESCRIPTION OF EO: ON -1, ADDED REQMTS FOR LM-3 THRU LM-15

GAEC (C) EO RELEASE: FR 11/10/6

MODEL	EFFECTIVITY PROCURING ACTIVITY NO.	GAEC UNIT NO.	SUB CONTR UNIT NO.
LM	LM-3(33)	THRU LM-	15(45)

DRAWING CHANGE REQD		DISPOSITION OF PARTS		APPROVED BY								
✓		NOT	REQ'D	✓ DATE	10/25/66			—	6W		RMC	
								—	10-19		10-26-66	10/27/66
REVISE DWG	RECORD EO	REWORK	SCRAP		VD1	SUPPORT	RELIAB. GROUP	GROUP LEADER	STRESS GROUP	LIAISON ENGRG	PROJ ENGRG	~~SCIT~~

PRIORITY	DRAWING TITLE	DRAWING NO.	EO NO.
C	SUPPORT INSTL - ASC MID SECT. OXY TANK BELLOWS	LDW 280-51890	A1

ISSUED BY P. TORRACO 9/30/66 X1441 SECTION VDI (R. Phillips) GROUP NO. 335 PL 35

01 NAS 9-1100

ENG 32.1 REV 3-65

GRUMMAN AIRCRAFT ENGINEERING CORP.
CODE IDENT NO. 26512
ENGINEERING ORDER

DWG. NO. LDW280-51890
EO NO. A2
CONTROL INFO NO. LDW280A-3163

1. IN F/D REMOVE INSTALLATION PROCEDURE #16 ("LOCKWIRE --ETC--")

2. IN N/A BLOCK REVISE AS SHOWN: (THIS IS A REVISION TO EO A-1)

NOW: 1 OF LDW280-51890-1 REQ'D ON LDW280-51001 FOR LM-1 (31)
1 OF LDW280-51890-1 REQ'D ON LDW280-52001 FOR LM-2 (32)
1 OF LDW280-51890-1 REQ'D ON LDW280-53001 FOR LM-3 (33)
1 OF LDW280-51890-1 REQ'D ON LDW280-54001 FOR LM-4 (34) THRU-15 (45)

WAS:
1 OF LDW280-51890-1 REQ'D ON LDW280-51002 FOR LM-1 (31)
1 OF LDW280-51890-1 REQ'D ON LDW280-52002 FOR LM-2 (32)
1 OF LDW280-51890-1 REQ'D ON LDW280-53002 FOR LM-3 (33)
1 OF LDW280-51890-1 REQ'D ON LDW280-54002 FOR LM-4 (34) THRU-15 (45)

DETAIL SPEC REQ ☐ CL II ENGRG CHG ☐ CL I ENGRG CHG ☐ LCR 459 3

REASON FOR EO: LOCK WIRE CALLED OUT ON N/A. & TO REVISE N/A.

DESCRIPTION OF EO: ON-1 REMOVE INSTAL PROCEDURE # 16 FROM F/D, CHANGE N/A FROM LDW280-51002 THRU-54002, TO LDW280-51001 THRU-54001

Ⓡ GAEC C EO RELEASE: FR 11/18/66

MODEL	PROCURING ACTIVITY NO.	GAEC UNIT NO.	SUB CONTR UNIT NO.
LM		LM-1 (31) THRU	
LM		LM-15 (45)	

DRAWING CHANGE REQD: REVISE DWG ✓ RECORD EO
DISPOSITION OF PARTS: REWORK ✓ SCRAP

	6	YD1	SUPPORT	RELIAB. GROUP	~~GROUP~~ LEADER	STRESS GROUP	LIAISON ENGRG	PROJ ENGRG	
APPROVED BY					—			RMe	
DATE		11/10/66			—	11-11		11-14-66	11/16/66

PRIORITY: C

DRAWING TITLE: SUPPORT INSTALLATION. ASCENT STAGE. MID SECT.- OXIDIZER TANK BELLOWS INBRD

DRAWING NO. LDW280-51890
EO NO. A2

ISSUED BY VALENTINE 11/8/66 X1441 SECTION V.D.I. (PHILLIPS) GROUP NO. 335 PL 35

01 NAS 9-1100

ENG 32.1 REV 3-65

GRUMMAN AIRCRAFT ENGINEERING CORP.
CODE IDENT NO. 26512
ENGINEERING ORDER EMF-A

DWG. NO. LDW280-51890
EO NO. A3
CONTROL INFO NO. LM-5-9979

ADD -3 INSTALLATION, SAME AS -1 EXCEPT THE FOLLOWING:

IN FLD/DWG & B/M:
LDW280M11189-1 FITTING S/B LDW280M11189-3 FITTING

IN FLD (SECTION C-C FASTENING CALLOUT):
"LOCATE FROM HOLES IN LDW280-28051 SKIN INSTL."

S/B

"LOCATE FROM HOLES IN {LDW280-53051 (LM-3)
{LDW280-54051 (LM-4-LM-15)} SKIN INSTL.

IN M/B
RESTRICT -1 INSTL TO: LM-1(31), (1)/MOD, N/A LDW280-51001
LM-2(32) (1)/MOD, N/A LDW280-52001

ADD -3 INSTL TO: LM-3 (33)(1) MOD, N/A LDW280-53001
LM-4(34) THRU LM-15(45) (1)/MOD, N/A LDW280-54001

RELEASED BY LIAISON

(SEE EO B1 OF LDW280M11189 FOR REWORKING -1 TO -3 FITTING)

DETAIL SPEC REQ ☐ CL II ENGRG CHG ☐ CL I ENGRG CHG ☐

REASON FOR EO: DIFFERENCE IN BULKHD OF LM-1 & 2 TO LM-3-15 REQ'D DIFFERENCE IN DETAIL PART THEREFOR -3 INSTL. REQ'D.

DESCRIPTION OF EO: IN FLD & B/M ADDED -3 INSTL., IN M/B -1 EFF. LM-1 & LM 2 WAS: LM-1 THRU LM-15 ADDED -3 INSTL TO LM-3 THRU LM-15

GAEC EO RELEASE: 6

MODEL	EFFECTIVITY PROCURING ACTIVITY NO.	GAEC UNIT NO.	SUB CONTR UNIT NO.
LM		LM-1(31)	
		THRU	
		LM-15(45)	

DRAWING CHANGE REQD: REVISE DWG ✓ RECORD EO
DISPOSITION OF PARTS: REWORK SCRAP ✓

APPROVED BY	Jap	SUPPORT	RELIAB. GROUP	GROUP LEADER	STRESS GROUP	LIAISON ENGRG	PROJ ENGRG	~~[illegible]~~
DATE	1/17/67			1/17/67	12/5/66	12-14	12-20-66	12/15/66
1	VDI				gab	CH		

PRIORITY: C
DRAWING TITLE: SUPPORT INSTL. ASCENT-MID SECT-OXIDIZER TANK BELLOWS INBOARD
DRAWING NO.: LDW280-51890
EO NO.: A3

ISSUED BY LIAISON P. HUSTED, 6452 SECTION VDI GROUP NO. 335 PL 35

01 NAS 9-1100

~~A~~.C **E.R.**

ENG 32.1 REV 3-65

GRUMMAN AIRCRAFT ENGINEERING CORP.
CODE IDENT NO. 26512
ENGINEERING ORDER

DWG. NO. LDW280-51890
EO NO. A4
CONTROL INFO NO. LDW280A8762

DELETE -3 INSTALLATION FROM F/D, B/M & MOD. BLOCK:
WITH N/A of LDW280-53001 (1) LM-3(33) EFF
& N/A of LDW280-54001 (1) LM-4(34) THRU LM-15(45).

DETAIL SPEC REQ		CL II ENGRG CHG		CL I ENGRG CHG	✓ LCD-1422

5

REASON FOR EO: ROTATION OF A/S ENGINE 180°. DELETES BELLOWS SUPT.

DESCRIPTION OF EO: REMOVED -3 INST'L

GAEC EO RELEASE: JK 9/9/7

MODEL	PROCURING ACTIVITY NO.	GAEC UNIT NO.	SUB CONTR UNIT NO.
LM		LM-3(33) THRU	
		LM-15(45)	

DRAWING CHANGE REQD: ✓ REVISE DWG; RECORD EO

DISPOSITION OF PARTS: REWORK; -3 SCRAP

APPROVED BY		SUPPORT	RELIAB. GROUP	GROUP LEADER	STRESS GROUP	LIAISON ENGRG	PROJ ENGRG	CONT
DATE	9/8			9/8/67	9-7		9/8	9/8/67
	VDI			FNR				

PRIORITY: C

DRAWING TITLE: SUPPORT INST'L - A/S, M/S, OXID. TANK BELLOWS INB'D.

DRAWING NO. LDW280-51890

EO NO. A4

9-14
ISSUED BY F. BADE X7033 SECTION VEH. DES. INT GROUP NO. 335 PL. 25

01

NAS 9-1100

LDW280-51896 A

MODEL OR END ITEM	NEXT ASSY	MODULE OR SER NO.	REQD PER MODULE OR END ITEM
PART NO.		GAEC SCH NO.	

LM	LDW280-51150	LM-2(32)	1
MODEL OR END ITEM	NEXT ASSY	MODULE OR SER NO.	REQD PER MODULE OR END ITEM
PART NO. LDW280-51896-49		GAEC SCH NO. 30	

LM	LDW280-51150	LM-1(31)	1
MODEL OR END ITEM	NEXT ASSY	MODULE OR SER NO.	REQD PER MODULE OR END ITEM
PART NO. LDW280-51896-1		GAEC SCH NO. 30	

SH REV STATUS: FOR DESCRIPTION OF REV SEE SUBQ SH

SHEET	1.00	1.10	2.00	3.00	~~4.00~~	~~5.00~~			
REV	A	A	A	A	~~A~~	~~A~~			
SHEET			2.01						
REV			A						
SHEET									
REV									

LAST SECT LTR USED AB

LAST DASH NO. USED -53

GRUMMAN REL INFO A

PRIM NO. K(001)

215 MP-1A 8/6/8

UNLESS OTHERWISE SPECIFIED DIMENSIONS ARE IN INCHES.
TOLERANCE UNLESS SPECIFIED
FRACTIONS - DECIMALS – ANGLES
± 1/8 — —

ORIG DWG AUTH

DETAIL SPEC REQUIREMENT

CLASS II ENGRG CHANGE

CLASS I ENGRG CHANGE

CONTRACT NO. NAS-9-1100

LINE ITEM I

DOCUMENTATION TYPE II (5)

DRAWN BY		THERMO	V. J. Sacony 11/11
LAYOUT BY	G. T. HALL JR		
CHECKED BY			
GR LEAD	Hart 11/10		
VDI	J. Pusateri 11/10/66		
STRUCTURES	PN EB 11/15	PROJ ENGR	R. M. Carbee 11-15-66
STRUCTURES		REL GROUP	J. Tagliana 11/16/66
WEIGHTS			

Ⓡ GRUMMAN AIRCRAFT ENGRG CORP
BETHPAGE, L. I., NEW YORK

BLANKET INSTL
A/S-M/S, EXTERIOR LWR

SIZE	CODE IDENT NO.		
B	26512	LDW280-51896	A

SCALE NONE

SHEET 1.00 OF 5

ENG 77.1 12-65

CDR 10-21-66

01

NAS 9-1100

REVISIONS FOR CONTINUATION OF REVISIONS SEE SHEET

CHANGE LTR	ITEM NO.	SHEET NO.	ZONE	GRUMMAN INFO ONLY	DET SPEC	CLASS I	CLASS II	ENGRG ORDER	DESCRIPTION	EFFECTIVITY	DISPOSITION OF EXISTING PARTS		CHANGED BY AND DATE	ENGRG APPD	GOVT APPD
											REWORK	SCRAP			
									RETRACED SH.3.00 NO CHG. LAST REV. NO CHG. CANCELLED SH 4.00 & 5.00. ADDED SH.1.10. F. LEGIDO 1-30-68						
A	1	1.00, 1.10 2.00 2.01 3.00	6A 12B				✓	EOA1	ON-3 ASSY: REMOVED -25-27 & -29. ADDED -39. REVISED NOTE 6 WAS "-33 & -34 CONSISTS---." ADDED LDW280-14441-9(8). ADDED -41(10) ON-1 INSTL ADDED -43, -45 NOTE 16. REVISED NOTE 8, WAS "35 & -37 BLANKETS---," ADDED DETAIL "R".	LM-1 LM-2		✓	F. LEGIDO 7-31-68		
	2	2.00, 3.00	3D					EOA2	ON-1 INSTL ADDED GR11C-7(39). ADDED -47(5" X 15" PATCH. REVISED NOTE 8 TO READ: "ON-35, -37, -45 & -47 CONSISTS OF---.		✓				
	3	2.01 3.00	1C 2B		✓			EOA3	ADDED NOTE 17, 18 & 19. ADDED GT15C-2 TAPE TO AGREE WITH SECTIONS. ADDED GT15C-2 TO B/M.						
	4	1.00 2.01 3.00	9A				✓	EOA4	ADDED -3, SECT XX-XX & NOTE 20. FROM -1 MODEL BLOCK REMOVED LM-2 REQUIREMENTS.	LM-2					
	5	1.00 2.01 3.00					✓	EOA5	REF EO A4: -49 INSTL WAS -3 INSTL						
	6	2.00 3.00	2A 2C			✓		EOA6 LCD 2303	ON-1 INSTL. ADDED NOTE 21 AND DETAIL AB. ON SECT S-S REVISED SEAM ADDED GT835E-8, GT835P-8. REMOVED GR11B-1(1), GW10H-1(1)	LM-1					
	7	2.00 2.01 3.00	16A 4C	O		✓		EOA7 LCD2303	ON-49 INSTL REPLACED -3 ASSY WITH -51 ASSY & LDW280P 10871-11 TAPE WITH LDW280P 10871-1 TAPE ASSY.	LM-2					
	8	1.00 2.00 2.01, 3.00	12A 12B 11B	LFM 95 -	①	✓		EOA8 LCD 2501	ON-1 & -49 INSTL. REVISED SECT A-A, B-B, C-C, D-D, E-E, & L-L. ADDED -53, GT15D-3 AND GT835E-8 TAPE. ADDED NOTE 22, 23 & 24.	LM-1, LM-2			H.D.	8-6-68	

CHG APPROVED	LTR	GROUP LDR	VEH DES INT	STRUCT	STRUCT	WEIGHTS	THERMO
	A						

GRUMMAN AIRCRAFT ENGRG CORP., BETHPAGE, L. I., NEW YORK

SIZE	CODE IDENT NO.		
B	26512	LDW280-51896	A
SCALE NONE		SHEET 1.10	

ENG 77.16 3-66

01

NAS 9-1100

QTY PER ASSEMBLY			-51	-49	-3	-1	CODE IDENT	PART NO.	I&T	NOMENCLATURE OR DESCRIPTION	MATERIAL	GOVT SPEC	COML SPEC	STOCK SIZE	PROCESS SYM	FINISH NO.	ZONE
				AR		A/R		GT535E-8	E	TAPE	GRUMM STD						
			AR		A/R			GT835P-8	↕	↕	GRUMM STD						
					A/R	A/R		LDW280P10871-11	↕	TAPE	SEE DWG						
			AR		A/R			GB10J-1	↕	BUSHING	GRUMM STD	SEE NOTE 9					
			AR		A/R			GS577A-1	↕	STAPLE	↕						
			AR		A/R			GW10H-1	↕	WASHER	↕	SEE NOTE 9					
			AR		A/R			GR11B-1	↕	SNAP	GRUMM STD						
				1		1		LDW280-51896-53	↕	BLANKET	SEE NOTE 22				NONE	SEE NOTE 23	12A
				1		1		-47	↕	PATCH	SEE NOTE 8				↕	NONE	3D
				54		54		-45	↕	↕	SEE NOTE 8				↕	↕	6A
				54		54		-43	↕	↕	SEE NOTE 16				↕	↕	6A
				10		10		-41	↕	PATCH	SEE NOTE 6				↕	↕	6C
			1		1			-39	↕	BLANKET	SEE NOTE 6				NONE	NONE	16C
				1		1		-37	↕	↕	8						16B
				1		1		-35	↕	↕	8						17B
			1		1			34	↕	↕	6						15B
			1		1			33	↕	↕	6						16B
			1		1			31	↕	↕	5						14B
			1		1			-23	↕	↕	1						17B
			1		1			-21	↕	↕	1						14C
			1		1			LDW280-51896-19	↕	BLANKET	SEE NOTE 1						18B
				1				LDW280-51896-51	↕	ASSY					NONE	NONE	16A
								LDW280-51896-49	↕	INSTL.					NONE	NONE	16A
						1		LDW280-51896-3	↕	ASSY					NONE	NONE	16A
								LDW280-51896-1	E	INSTL.					NONE	NONE	16A

SYM OR NO.	PROCESS OR FINISH	GRUMMAN SPEC OR MILITARY SPEC	SYM OR NO.	PROCESS OR FINISH	GRUMMAN SPEC OR MILITARY SPEC	SYM OR NO.	PROCESS OR FINISH	GRUMMAN SPEC OR MILITARY SPEC

I & T: IDENTIFICATION AND TRACEABILITY IN ACCORDANCE WITH : NONE

GRUMMAN AIRCRAFT ENGRG CORP, BETHPAGE, L. I., NEW YORK

SIZE	CODE IDENT NO.		
B	26512	LDW280-51896	A ④

SCALE NONE | LINE ITEM I | SHEET 2.00

ENG 77.2 7-65

01

NAS 9-1100

-51	-49	-3	-1	PART NO.	I&T	CODE IDENT	NOMENCLATURE OR DESCRIPTION	MATERIAL	GOVT SPEC	COML SPEC	STOCK SIZE	PROCESS SYM	FINISH NO.	ZONE
				MS20470B4	E		RIVET	STD PART						
	39		39	GR11C-7	E		RETAINER	GRUMMAN STD						
	AR		AR	GT15D-3	E		TAPE	↕						
	AR		AR	GT15C-2	E		TAPE	GRUMMAN STD						
AR		AR		GB10J-2	E		BUSHING	GRUMMAN STD						
4		4		LDW280P14391-3	E		BAY VENT	SEE DWG						12B
4		4		LDW280P14391-1	↕		BAY VENT	↕						12B
8		8		LDW280-14441-9	↕		PATCH	↕						12B
	AR			LDW280P10871-1	E		TAPE ASSY	SEE DWG						6A

QTY PER ASSEMBLY

SYM OR NO.	PROCESS SYM OR FINISH NO.	GRUMMAN SPEC OR MILITARY SPEC	SYM OR NO.	PROCESS SYM OR FINISH NO.	GRUMMAN SPEC OR MILITARY SPEC	SYM OR NO.	PROCESS SYM OR FINISH NO.	GRUMMAN SPEC OR MILITARY SPEC

I & T: IDENTIFICATION AND TRACEABILITY IN ACCORDANCE WITH NONE

GRUMMAN AIRCRAFT ENGRG CORP., BETHPAGE, L. I., NEW YORK

SIZE B
CODE IDENT NO. 26512
LDW280-51896
A
SCALE NONE
SHEET 2.01

ENG 77.2 5-64

01

NAS 9-1100

01/05

NAS 9-1100

LOCATION OF PRESURE TAP STANDOFFS
FOR REF ONLY

PT	X	Y	Z
A	200.000	+35.463	+17.105
B	208.843	-38.898	+9.950
C	204.297	+27.023	-9.805
D	210.010	-30.802	+9.950
E	217.906	-27.651	-16.760
F	211.542	-38.931	-9.880
G	215.278	-31.125	-30.500
J	214.058	-33.996	-7.010
L	223.500	+ 2.785	-24.755
M	211.828	-38.370	-1.330
N	223.500	-10.800	+10.500
O	205.467	+24.825	+9.805
P	200.000	-61.873	-12.150
Q	203.782	-36.276	+30-650
S	200.000	-68.310	+9.850
T	202.943	+29.565	+9.805
U	201.862	+31.595	-9.805

LOCATION OF STANDOFFS
FOR REF ONLY

	Y	Z		Y	Z		Y	Z
S1	+67.220	-22.167	S19	+17.750	+15.550	S37	-72.100	+28.000
S2	+67.220	-31.650	S20	+19.320	+23.250	S38	-65.000	+10.250
S3	+48.000	-31.500	S21	+0.875	+11.000	S39	-80.500	+7.750
S4	+51.000	-21.217	S22	+13.000	-18.125	S40	-80.500	+8.000
S5	+41.750	-31.000	S23	0.000	-30.300	S41	-65.000	-10.250
S6	+51.500	-10.250	S24	+0.875	-12.000	S42	-75.300	-23.500
S7	+54.000	- 1.500	S25	-13.000	- 18.125	S43	-59.000	-31.000
S8	+55.063	+9.625	S26	-19.320	+23.250	S44	-49.000	-10.500
S9	+55.562	+24.375	S27	-22.800	+30.000	S45	-16.125	-13.562
S10	+48.500	+29.000	S28	-20.250	+ 9.500	S46	+21.238	-21.723
S11	+48.500	+13.250	S29	-27.000	- 9.250	S47	+21.238	-3.640
S12	+26.000	+30.250	S30	-19.000	-31.000	S48	+21.238	+13.956
S13	+32.000	+10.250	S31	-37.000	-31.000	S49	-16.748	-19.175
S14	+35.968	- 0.650	S32	-36.000	-10.500	S50	-18.447	- 4.612
S15	+24.000	-10.160	S33	-33.800	+ 9.500	S51	-63.783	- 3.155
S16	+25.320	-31.000	S34	-47.500	+10.000	S52	-62.812	- 4.612
S17	+16.250	-31.000	S35	-43.200	+30.000	S53	-79.997	-12.397
S18	+17.750	-10.250	S36	-65.000	+30.000	S54	-78.756	-13.975

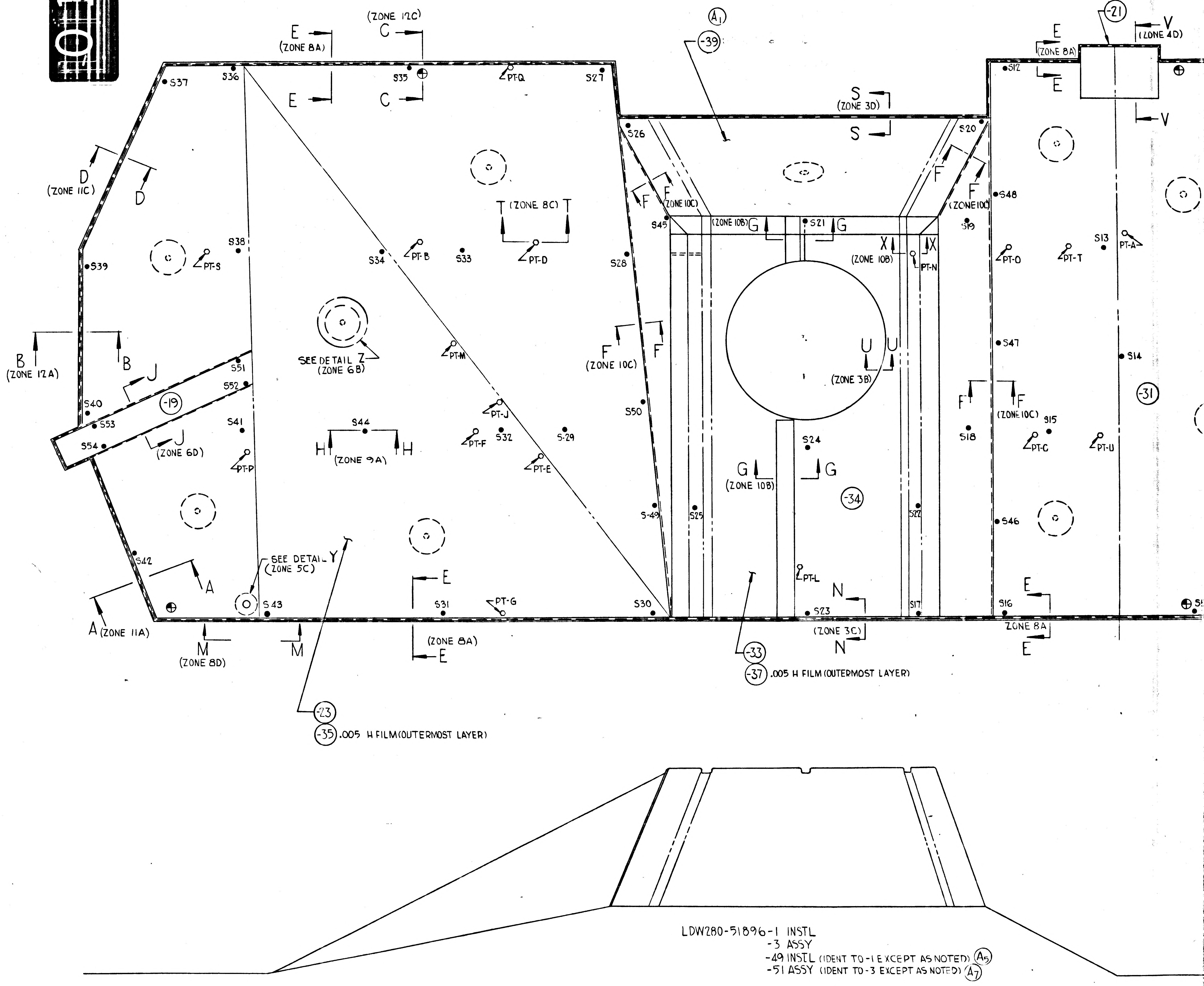

(ZONE 12C)
C
E
(ZONE 8A)
S37
S36
S35
PT-Q
S27
D
(ZONE 11C)
S39
S38
PT-S
S34
PT-B
S33
PT-D
T (ZONE 8C) T
S28
B
(ZONE 12A)
J
S51
S52
S40
S53
S54
(ZONE 6D)
(-19)
S41
PT-P
SEE DETAIL Z
(ZONE 6B)
PT-M
PT-J
S44
H
(ZONE 9A)
PT-F
S32
S-29
PT-E
F
(ZONE 10C)
S50
S-49
S42
A
(ZONE 11A)
SEE DETAIL Y
(ZONE 5C)
S43
S31
PT-G
S30
M
(ZONE 8D)
(-23)
(-35) .005 H FILM(OUTERMOST LAYER)
(A1)
(-39)
S
(ZONE 3D)
S26
S20
S45
(ZONE 10B)
G
S21
X
PT-N
S19
U
(ZONE 3B)
S24
(-34)
S25
S22
PT-L
N
S23
S17
(ZONE 3C)
(-33)
(-37) .005 H FILM (OUTERMOST LAYER)
(-21)
V
(ZONE 4D)
S12
S48
PT-O
PT-T
S13
PT-A
S47
S14
S18
S15
PT-C
PT-U
(-31)
S46
S16
ZONE 8A

LDW280-51896-1 INSTL
-3 ASSY
-49 INSTL (IDENT TO -1 EXCEPT AS NOTED) (A5)
-51 ASSY (IDENT TO -3 EXCEPT AS NOTED) (A7)

LDW280-51896 SH. 3

14 13 12 11 10

02/05

NAS 9-1100

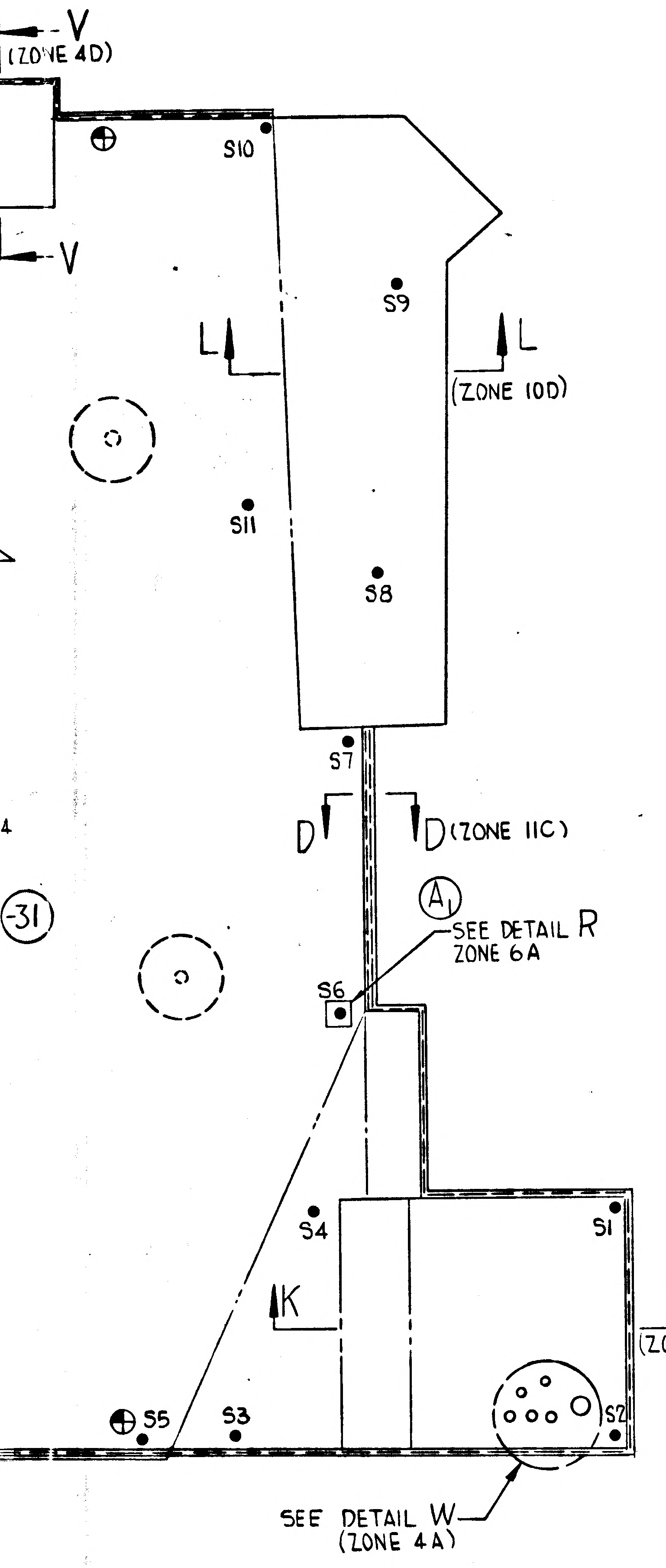
V
(ZONE 4D)
V
S10
S9
L
L
(ZONE 10D)
S11
S8
S7
D
D (ZONE 11C)
A1
SEE DETAIL R
ZONE 6A
S6
31
S4
S1
K
K
(ZONE 12 D)
S5
S3
S2
SEE DETAIL W
(ZONE 4A)

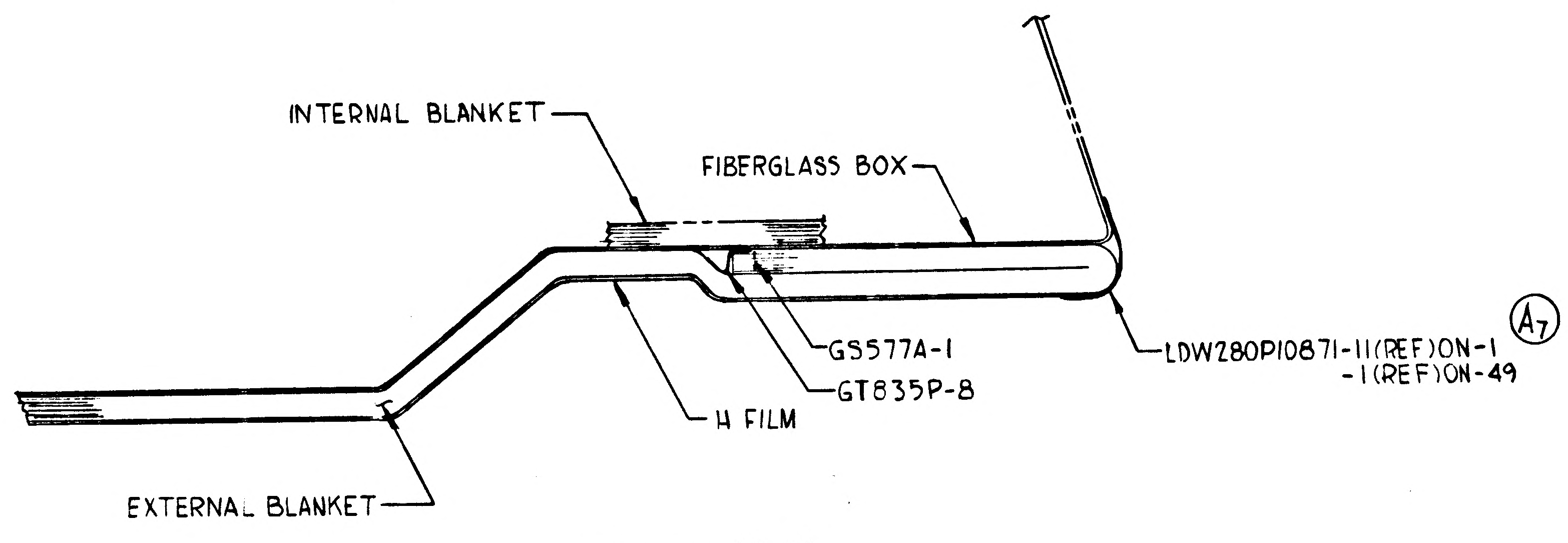
INTERNAL BLANKET
FIBERGLASS BOX
GS577A-1
GT835P-8
H FILM
EXTERNAL BLANKET
LDW280P10871-11(REF)ON-1
-1(REF)ON-49
A7

SECTION K-K
ZONE 14B

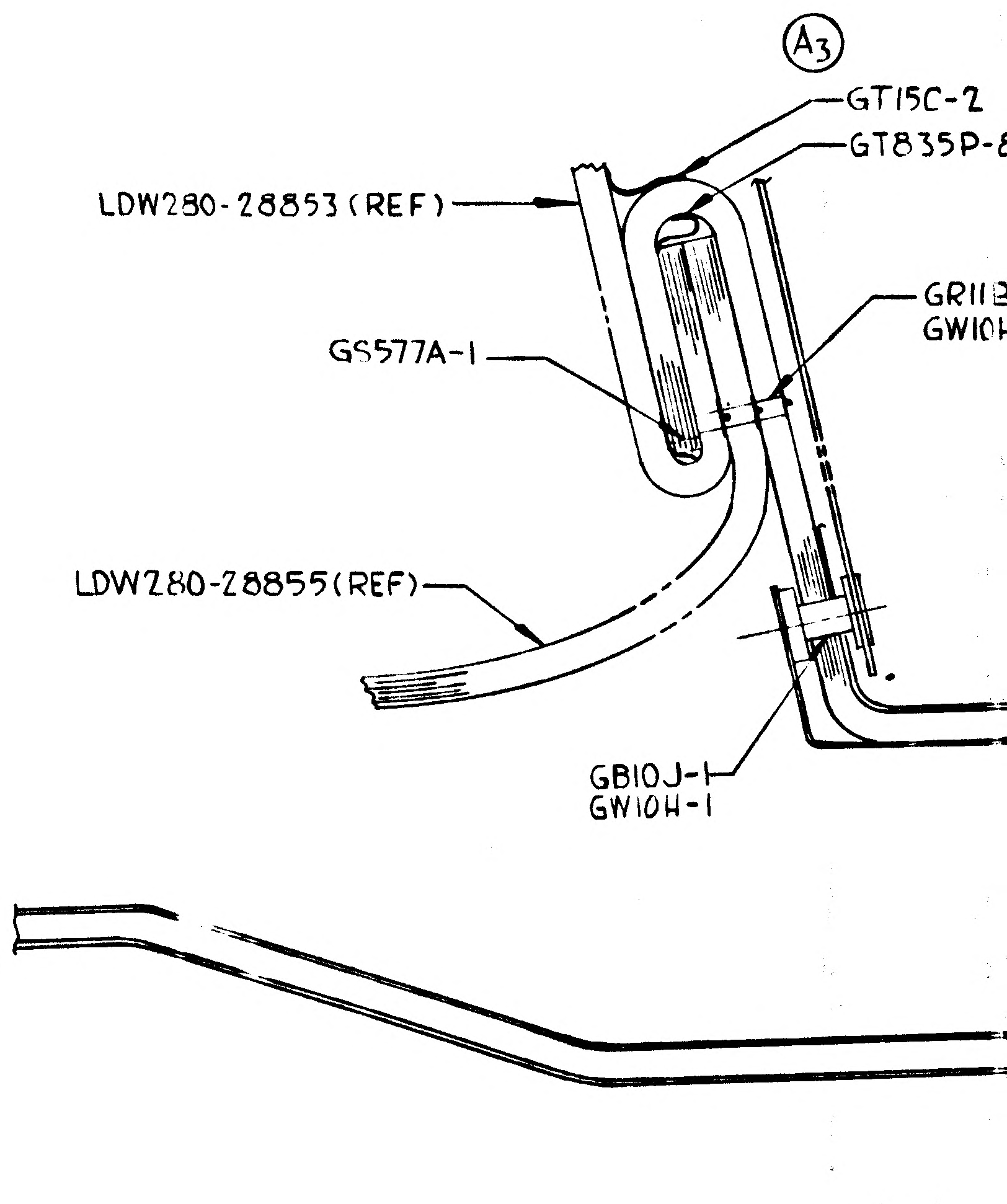
A3
GT15C-2
GT835P-8
LDW280-28853 (REF)
GR11B
GW10H
GS577A-1
LDW280-28855(REF)
GB10J-1
GW10H-1

SECTION L-L
ZONE 14C

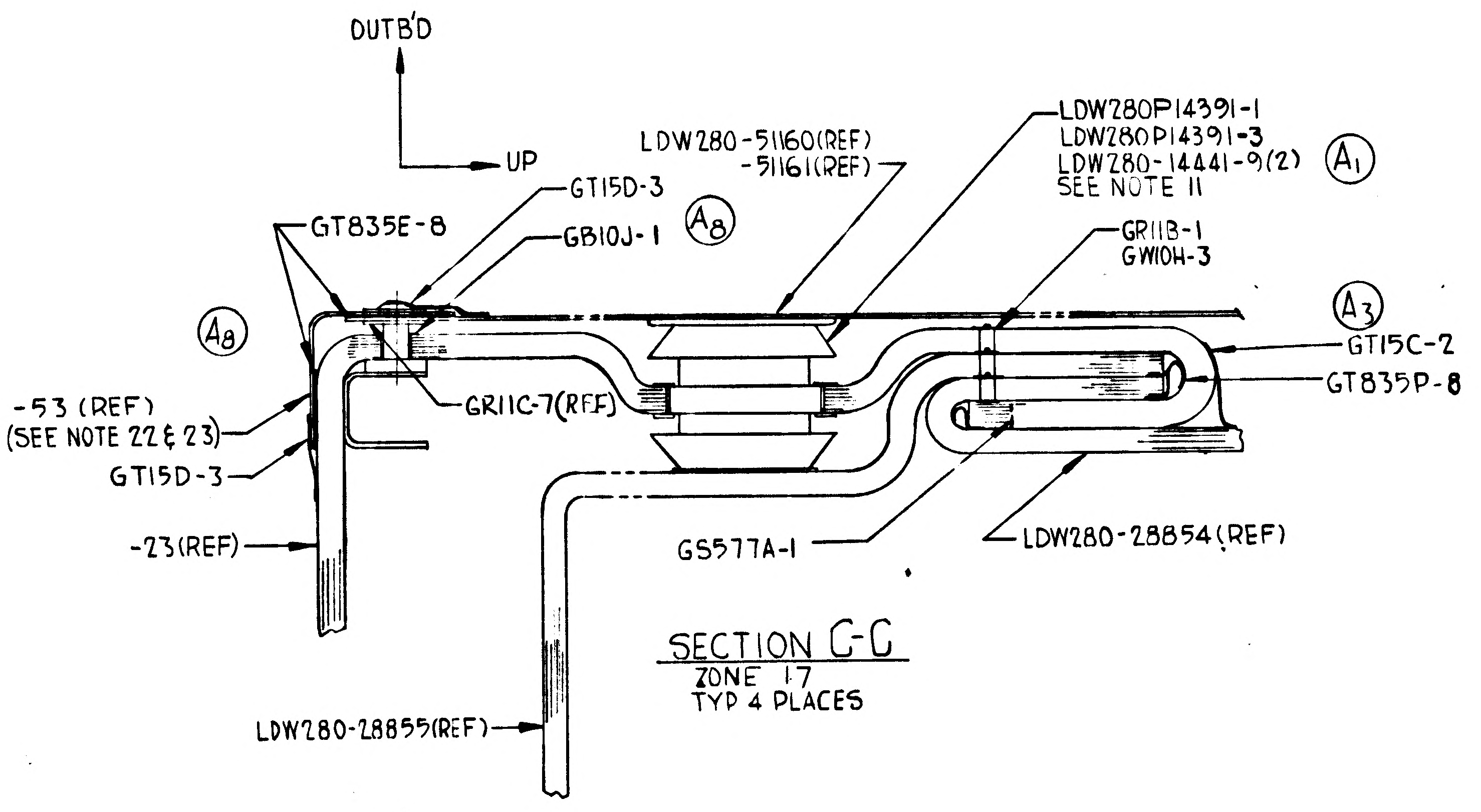
OUTB'D
UP
LDW280-51160(REF)
-51161(REF)
GT15D-3
A8
GT835E-8
GB10J-1
LDW280P14391-1
LDW280P14391-3
LDW280-14441-9(2)
SEE NOTE 11
A1
GR113-1
GW10H-3
A3
GT15C-2
GT835P-8
A8
-53 (REF)
(SEE NOTE 22 & 23)
GT15D-3
GR11C-7(REF)
-23(REF)
GS577A-1
LDW280-28854(REF)
LDW280-28855(REF)

SECTION C-C
ZONE 17
TYP 4 PLACES

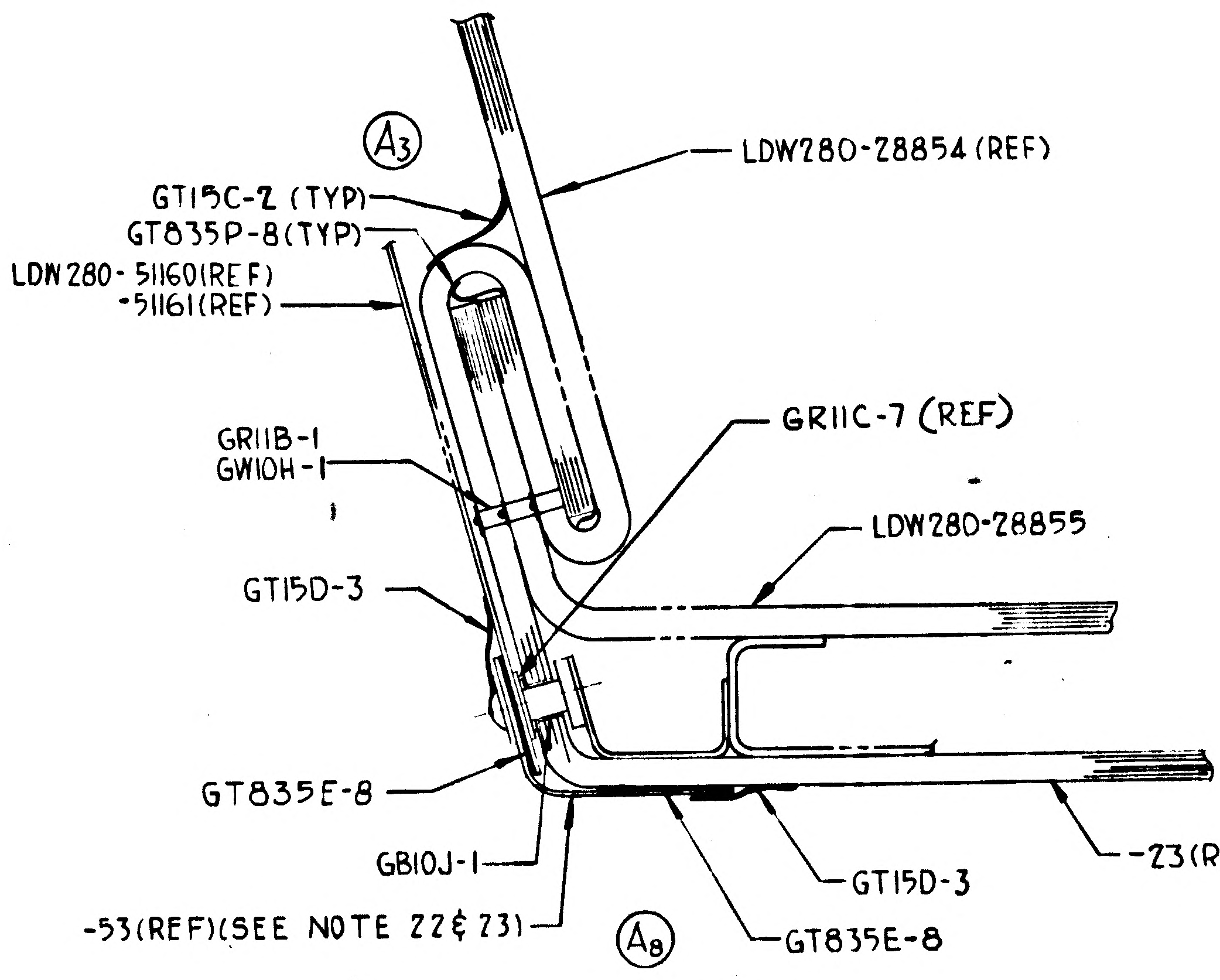
A3
LDW280-28854 (REF)
GT15C-2 (TYP)
GT835P-8(TYP)
LDW280-51160(REF)
-51161(REF)
GR11B-1
GW10H-1
GR11C-7 (REF)
LDW280-28855
GT15D-3
GT835E-8
GB10J-1
-53(REF)(SEE NOTE 22 & 23)
A8
GT15D-3
GT835E-8
-23(REF)

SECTION D-D
ZONE 18C(TYP 2 PLCS)

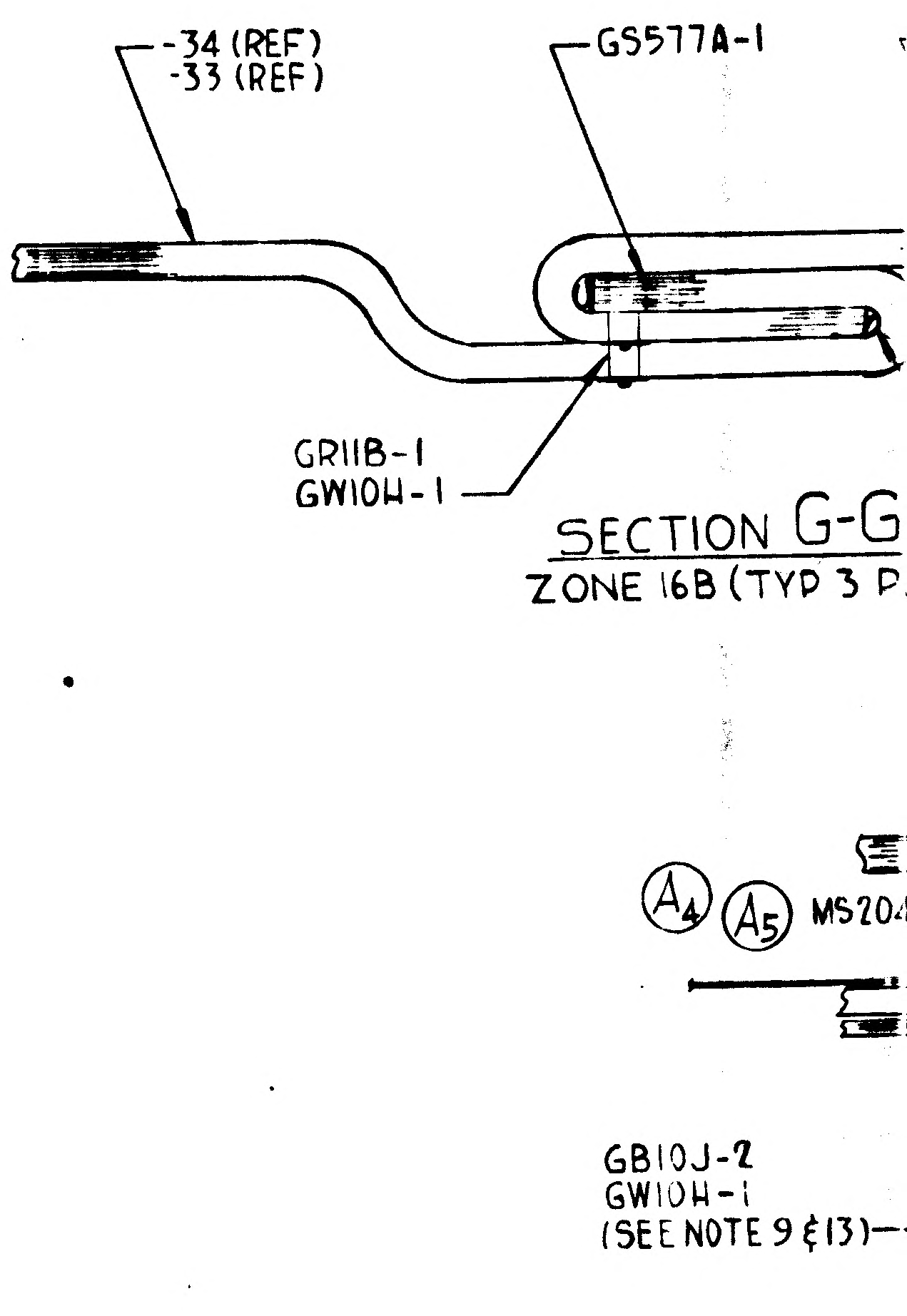
-34 (REF)
-33 (REF)
GS577A-1
GR11B-1
GW10H-1
A4
A5
MS20
GB10J-2
GW10H-1
(SEE NOTE 9 & 13)

SECTION G-G
ZONE 16B (TYP 3 P

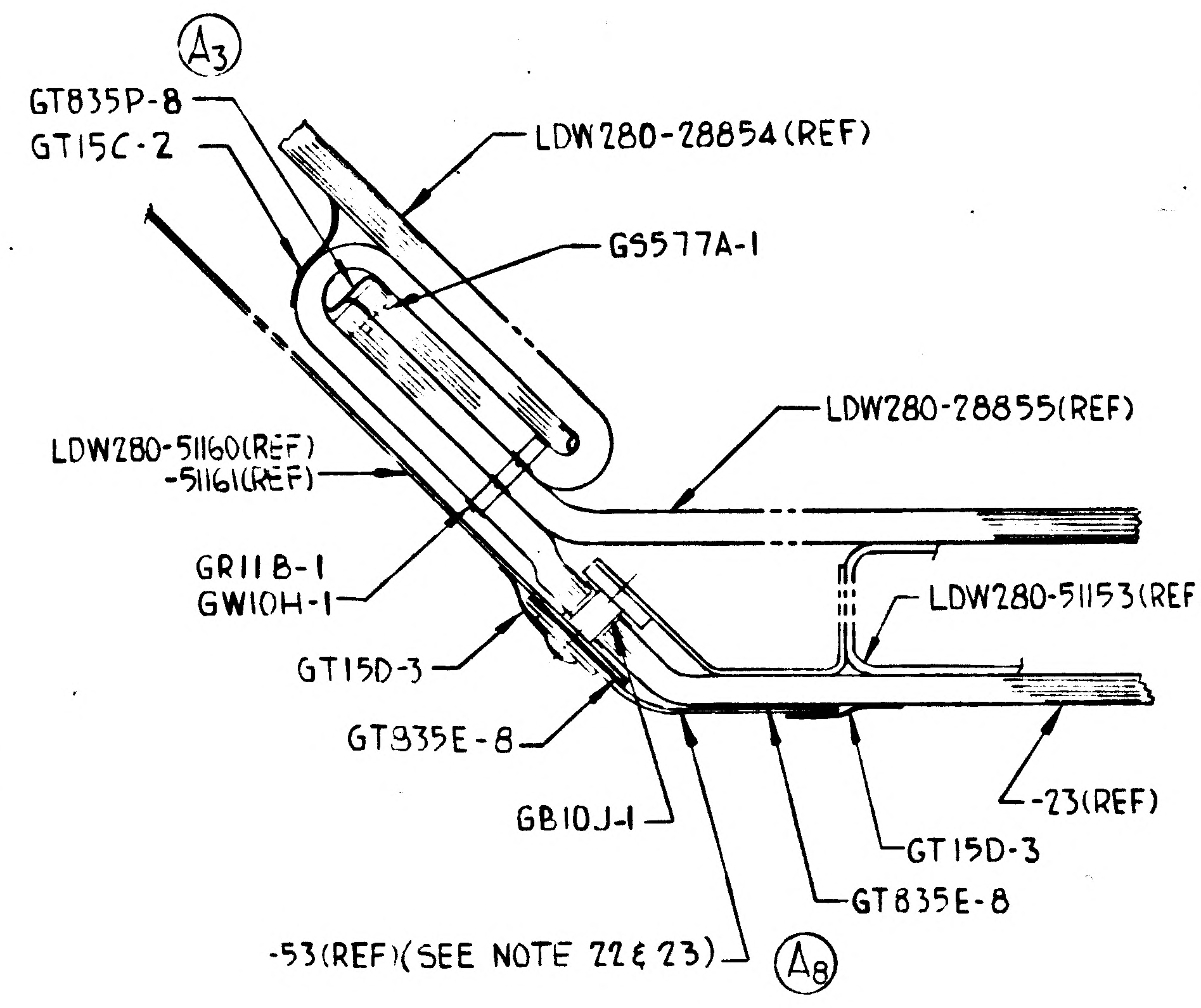
A3
GT835P-8
GT15C-2
LDW280-28854(REF)
GS577A-1
LDW280-28855(REF)
LDW280-51160(REF)
-51161(REF)
GR11B-1
GW10H-1
LDW280-51153(REF)
GT15D-3
GT835E-8
GB10J-1
-23(REF)
GT15D-3
GT835E-8
-53(REF)(SEE NOTE 22 & 23)
A8

SECTION B-B
ZONE 18C

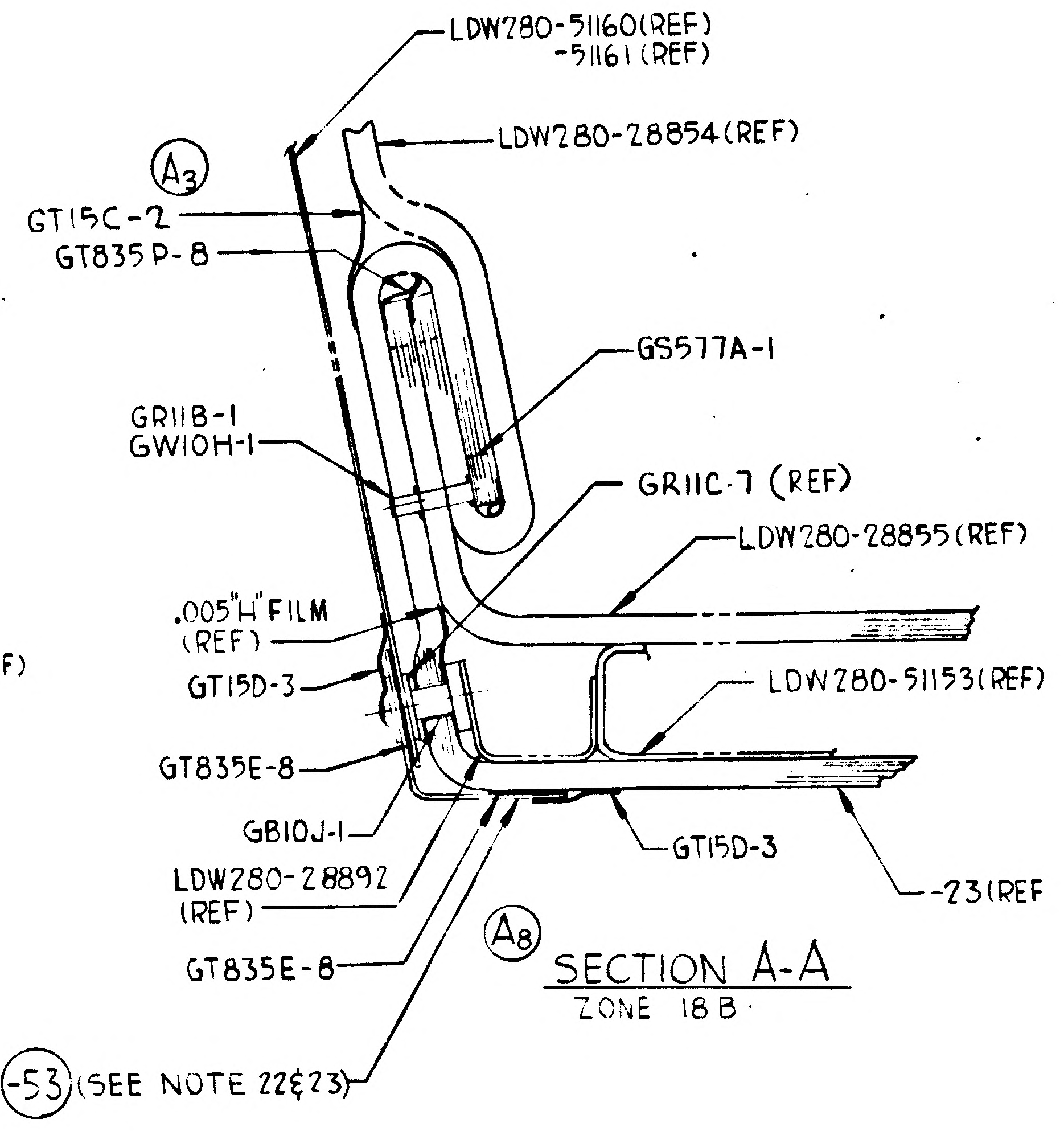
LDW280-51160(REF)
-51161 (REF)
LDW280-28854 (REF)
A3
GT15C-2
GT835P-8
GS577A-1
GR11B-1
GW10H-1
GR11C-7 (REF)
LDW280-28855 (REF)
.005"H FILM
(REF)
GT15D-3
LDW280-51153(REF)
GT835E-8
GB10J-1
LDW280-28892
(REF)
GT15D-3
-23(REF
GT835E-8
A8
-53 (SEE NOTE 22 & 23)

SECTION A-A
ZONE 18B

LDW280-51896 SH 3

14 13 12 11 10

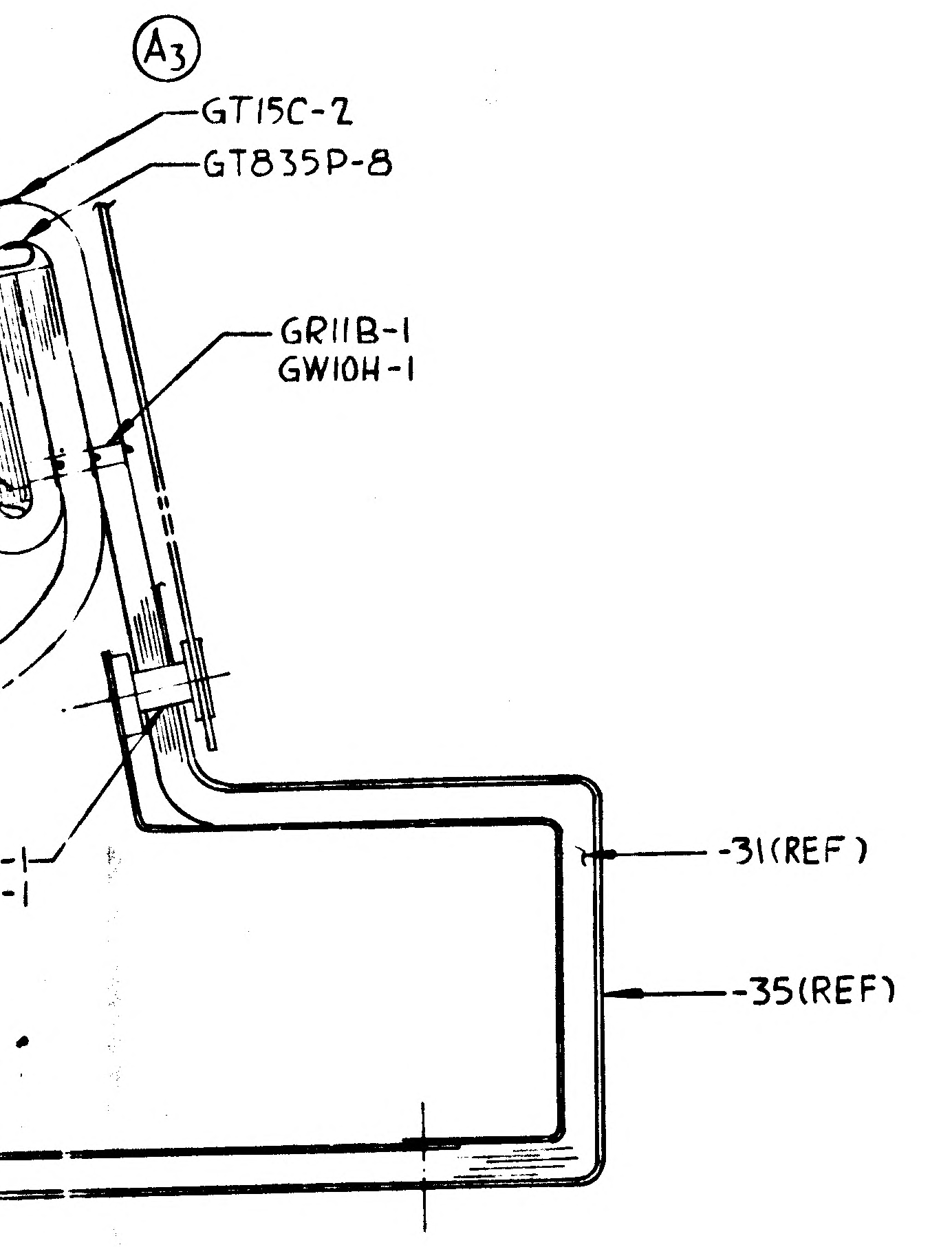
A3
GT15C-2
GT835P-8
GR11B-1
GW10H-1
-31(REF)
-35(REF)

ECTION L-L
ONE 14C

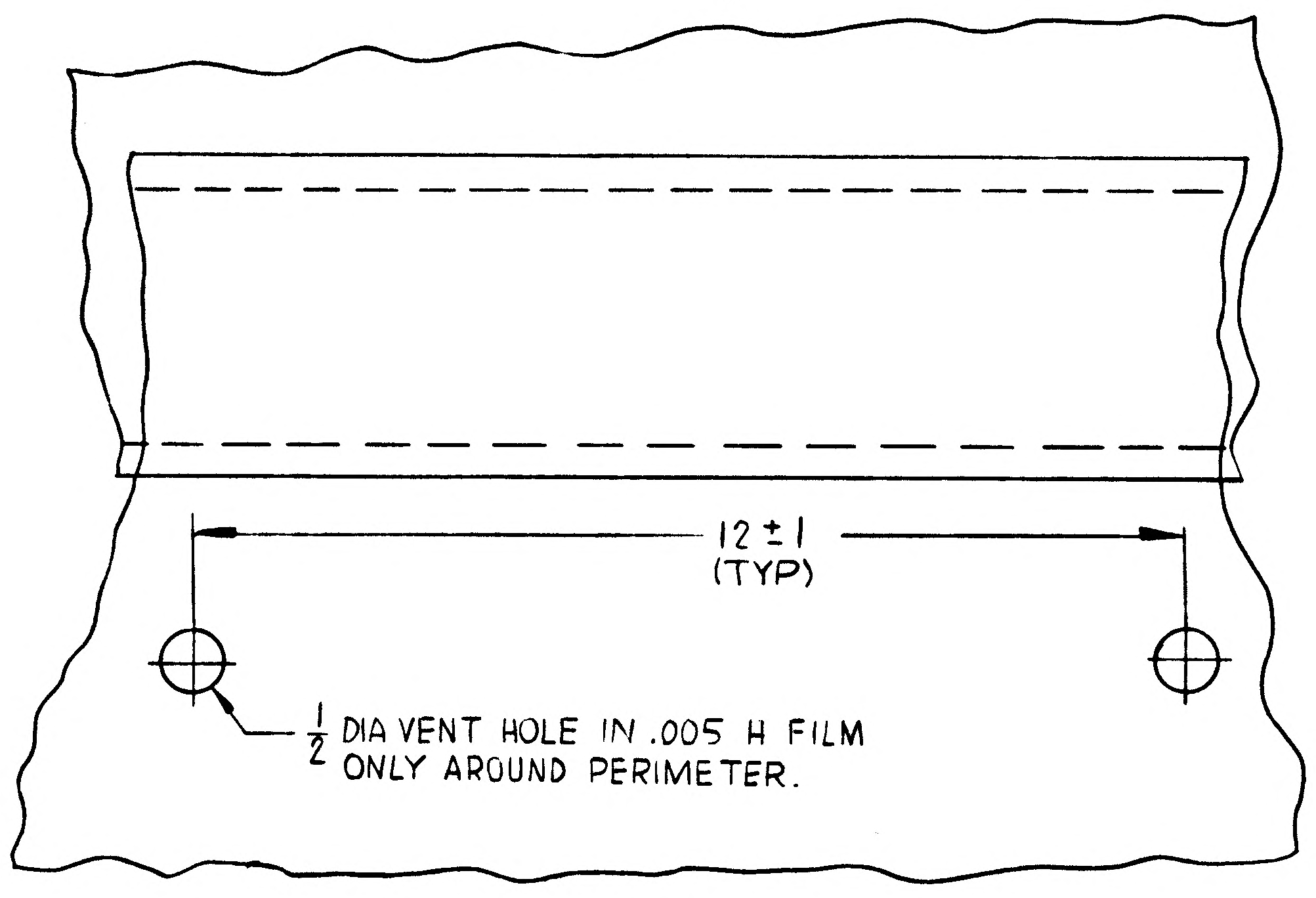
12 ± 1
(TYP)
1/2 DIA VENT HOLE IN .005 H FILM
ONLY AROUND PERIMETER.

VIEW M-M
ZONE 18B

03/05 NAS 9-1100

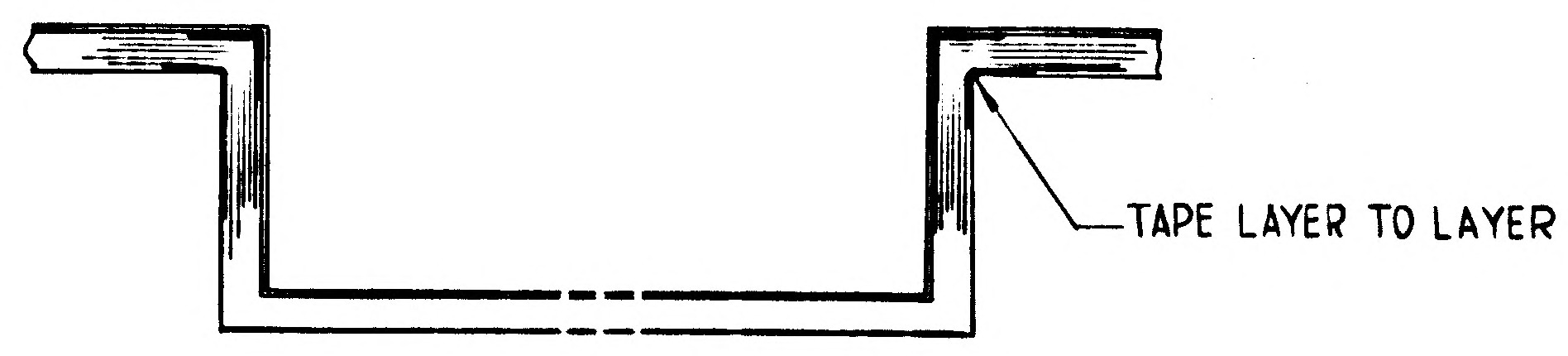
TAPE LAYER TO LAYER

SECTION J-J
ZONE 18B

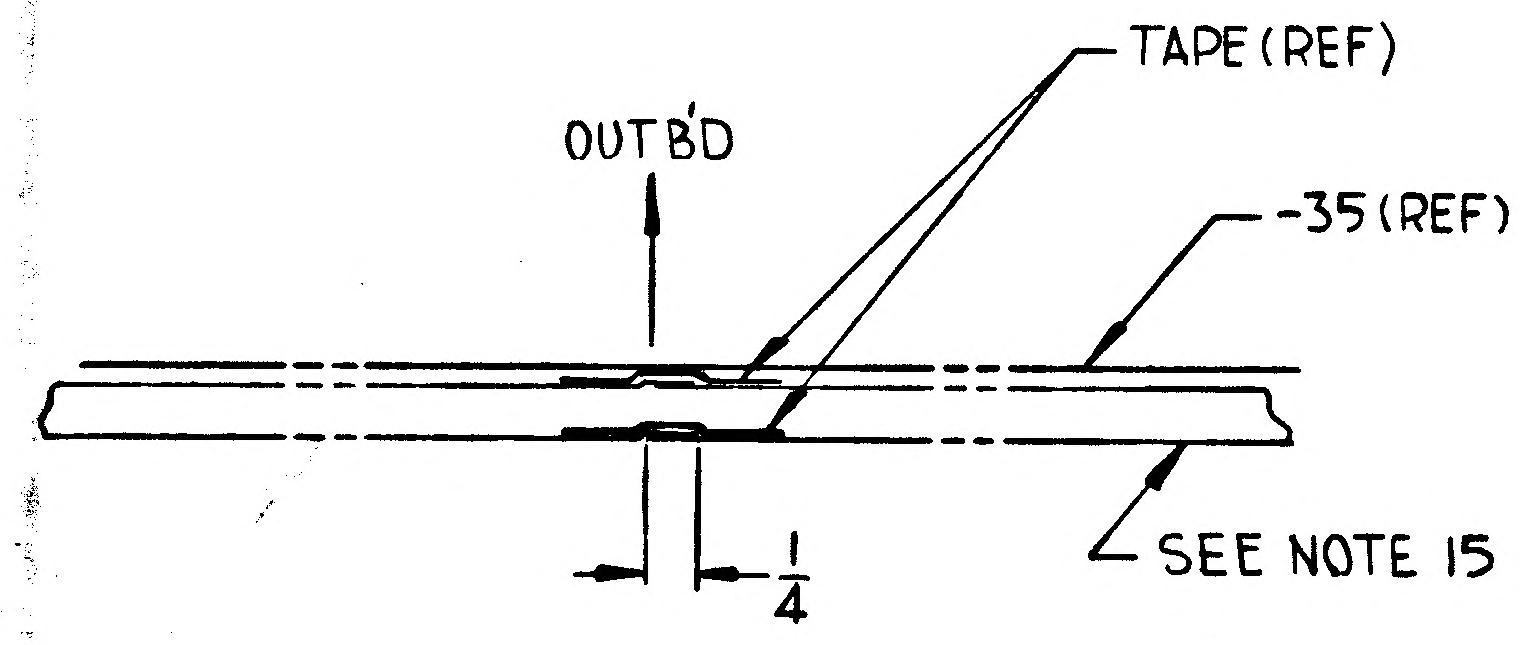
TAPE(REF)
OUTB'D
-35(REF)
1/4
SEE NOTE 15

SECTION F-F
ZONE 16C (TYP 4 PLCS)

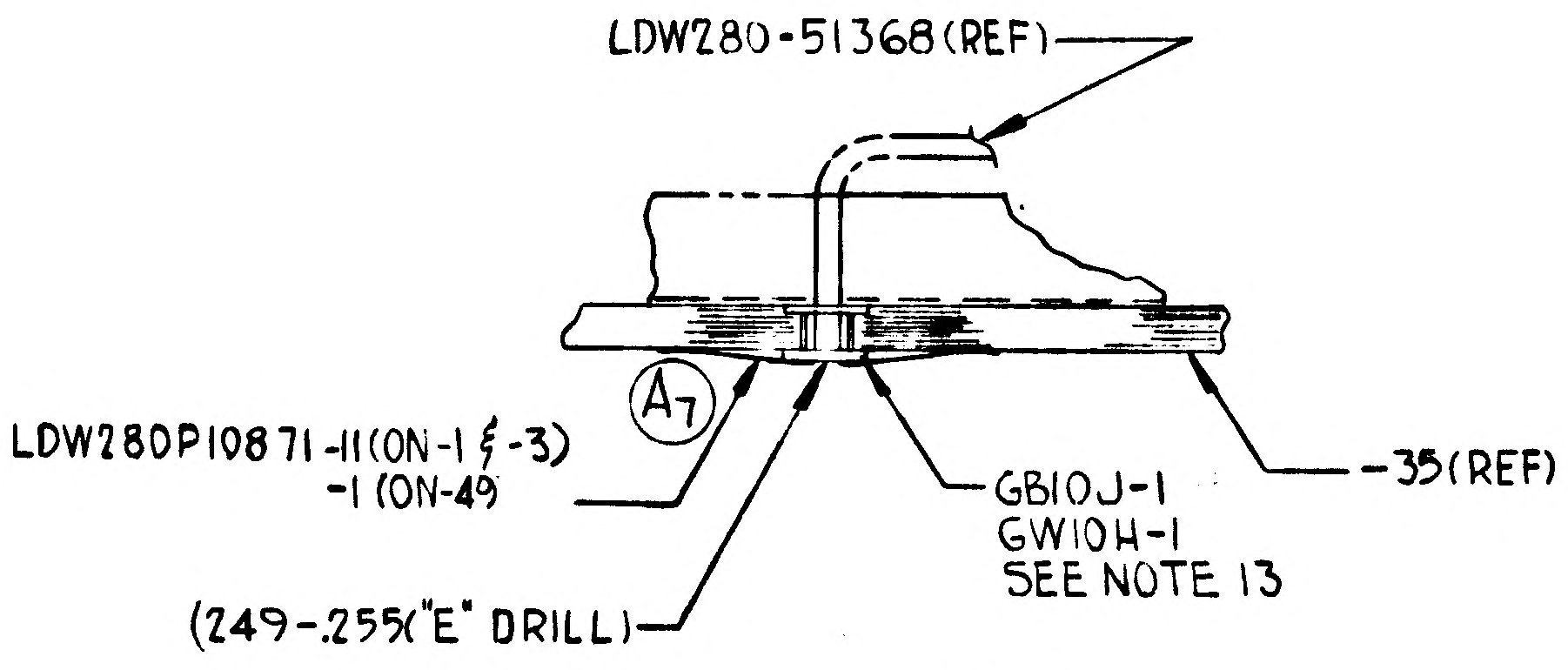
LDW280-51368(REF)
A7
LDW280P10871-11(ON-1 & -3)
-1 (ON-49
GB10J-1
GW10H-1
SEE NOTE 13
-35(REF)
(249-.255("E" DRILL)

SECTION T-T
ZONE 17C (TYP 16 PLCS)

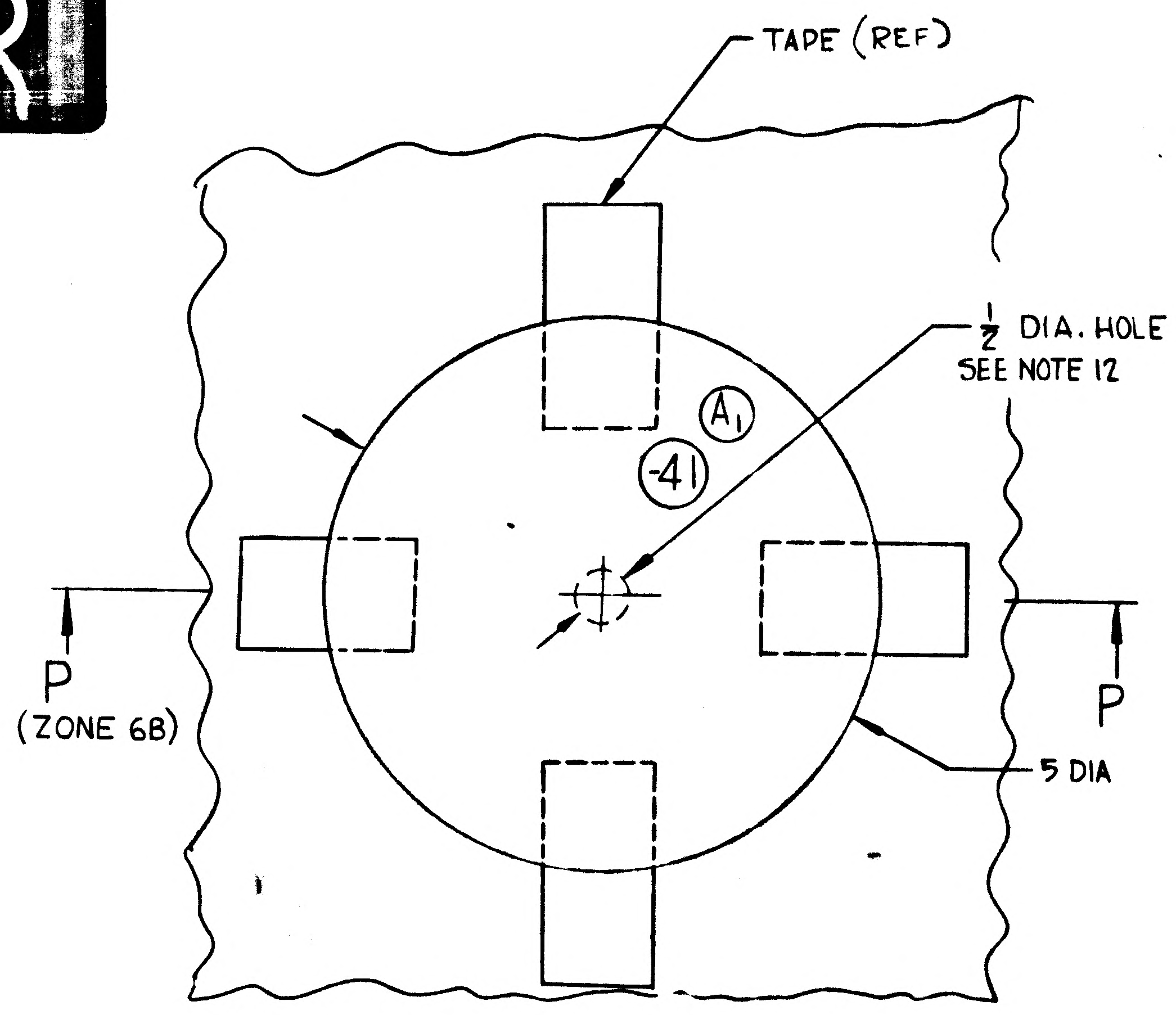
TAPE (REF)
1/2 DIA. HOLE
SEE NOTE 12
A1
-41
P
(ZONE 6B)
P
5 DIA

DETAIL Z (TYP 10 PLACES)
ZONE 17C

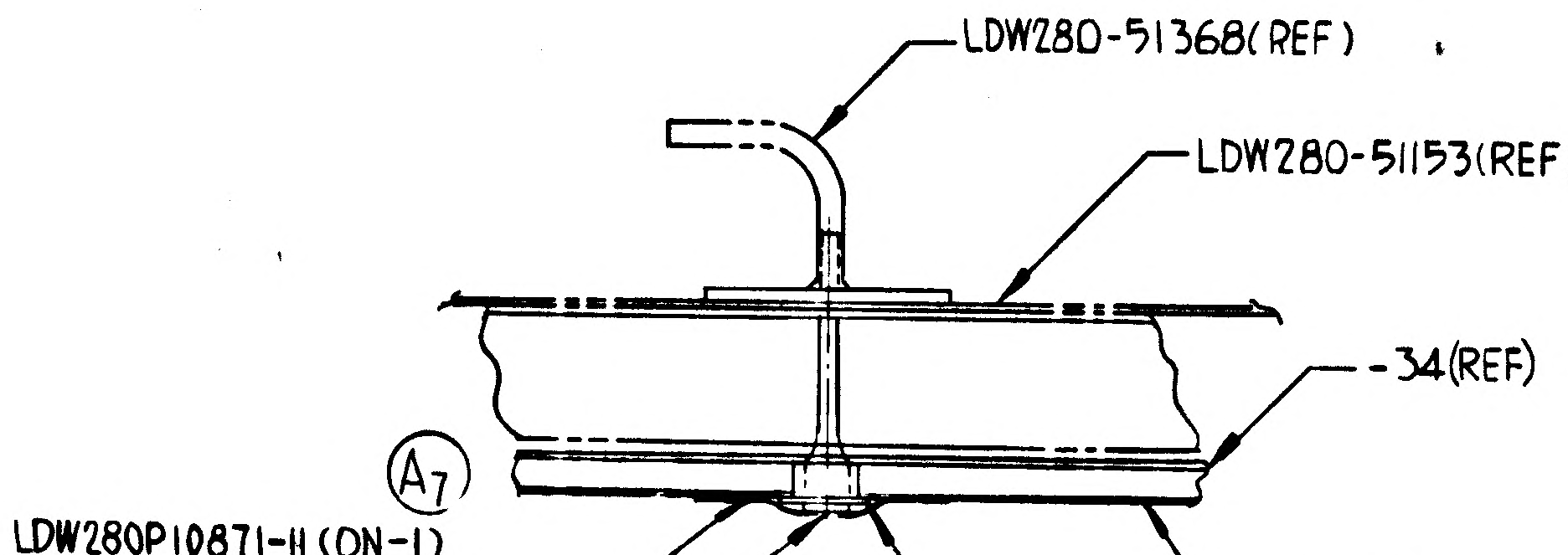
LDW280-51368(REF)
LDW280-51153(REF)
-34(REF)
A7
LDW280P10871-11 (ON-1)
-1 (ON-49)
.249-.255("E" DRILL)
-37(REF)
GB10J-1
GW10H-1
(SEE NOTE 9 & 13)

SECTION AA-AA
ZONE 15C

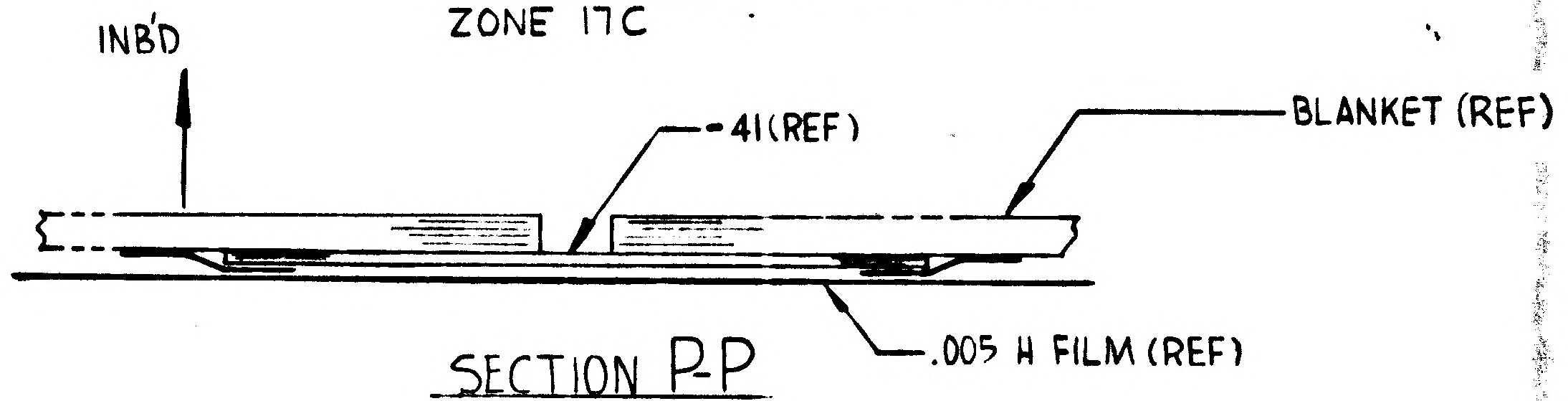
INB'D
-41(REF)
BLANKET (REF)
.005 H FILM (REF)

SECTION P-P
ZONE 6C

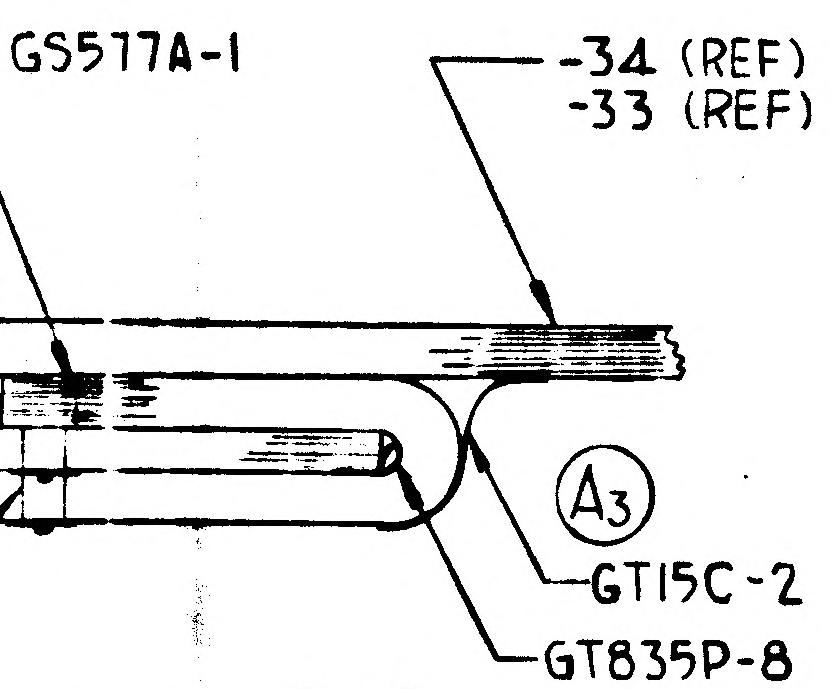
GS577A-1
-34 (REF)
-33 (REF)
A3
GT15C-2
GT835P-8

ECTION G-G
NE 16B (TYP 3 PLCS)

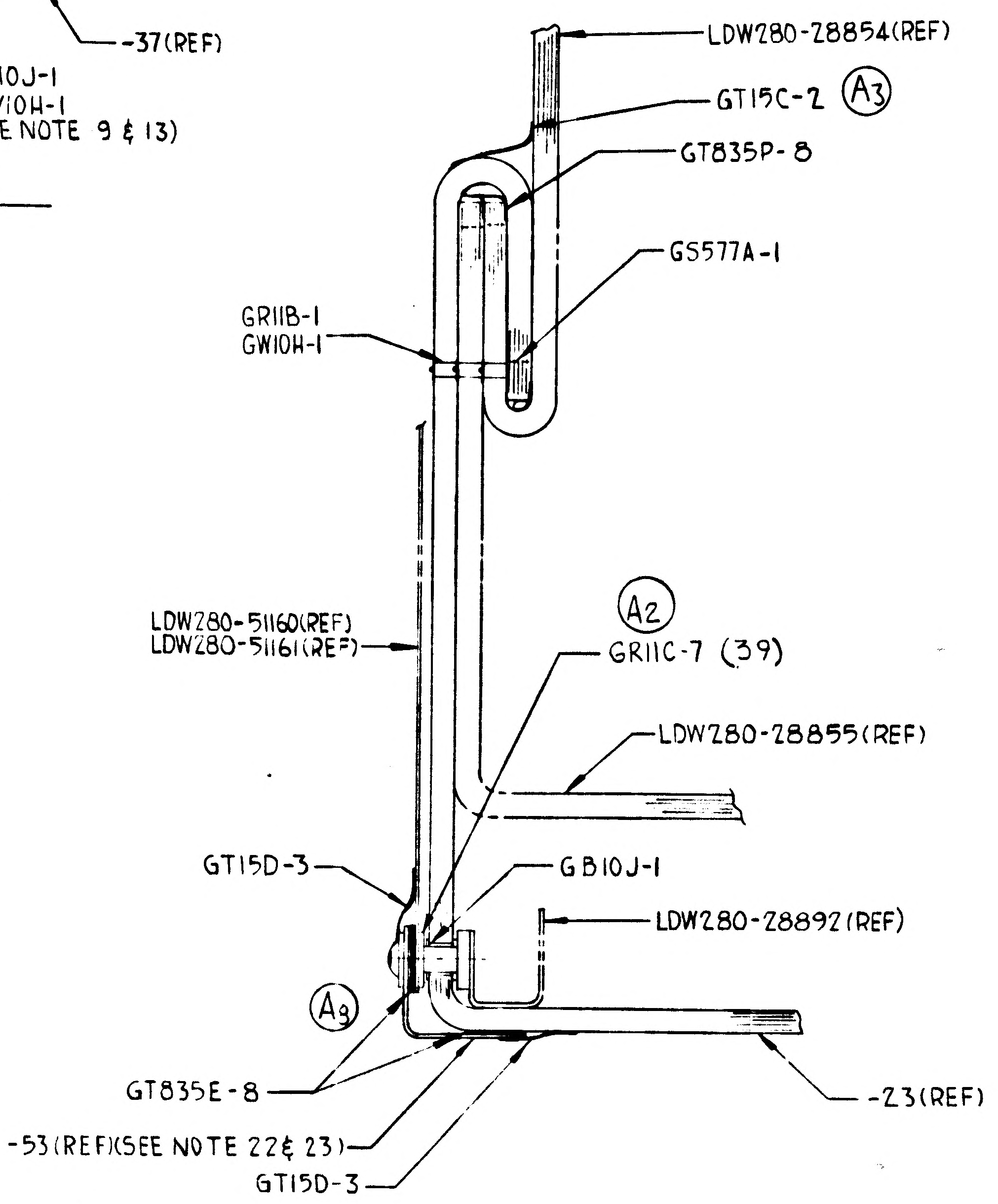
LDW280-28854(REF)
GT15C-2
A3
GT835P-8
GS577A-1
GR11B-1
GW10H-1
A2
LDW280-51160(REF)
LDW280-51161(REF)
GR11C-7 (39)
LDW280-28855(REF)
GT15D-3
GB10J-1
LDW280-28892(REF)
A3
GT835E-8
-53(REF)(SEE NOTE 22& 23)
GT15D-3
-23(REF)

SECTION E-E
ZONE 17C(TYP 4 PLCS)

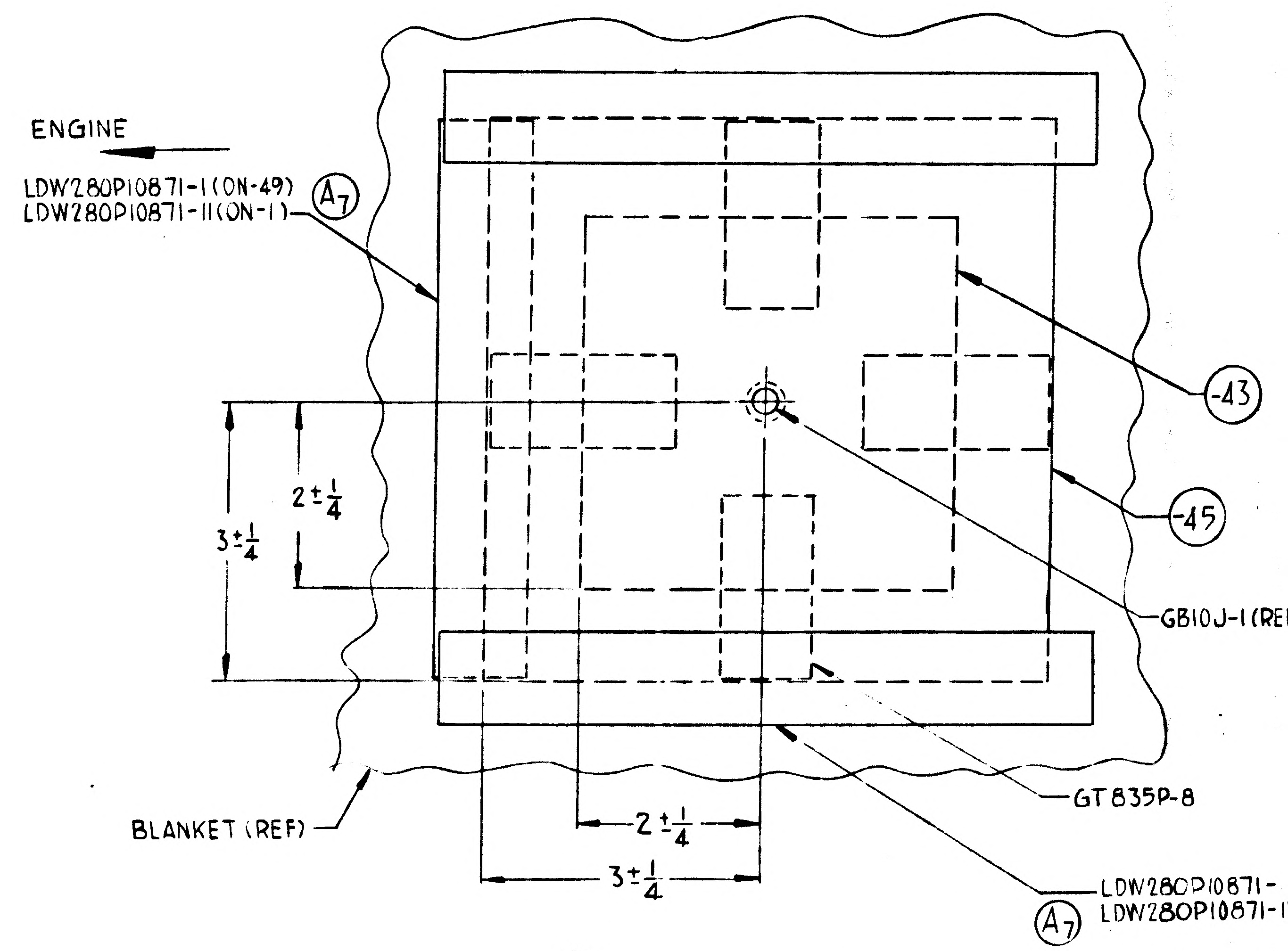
ENGINE
LDW280P10871-1(ON-49)
LDW280P10871-11(ON-1)
A7
-43
-45
2 ± 1/4
3 ± 1/4
GB10J-1(RE
GT835P-8
BLANKET (REF)
2 ± 1/4
3 ± 1/4
LDW280P10871-
LDW280P10871-1
A7

A1 DETAIL R
ZONE 14B
TYP 54 PLCS

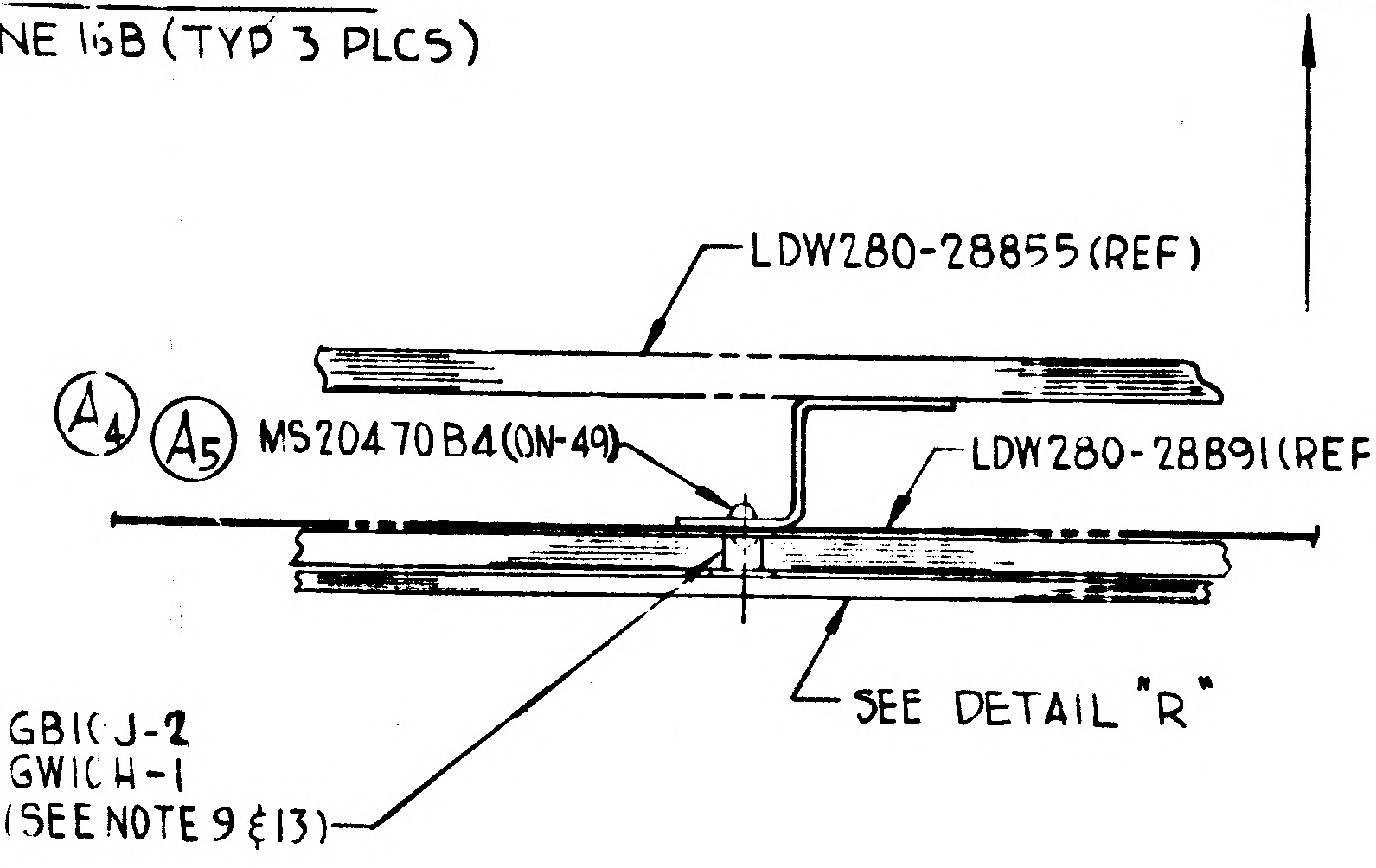
INB'D
LDW280-28855(REF)
A4
A5
MS20470B4(ON-49)
LDW280-28891(REF)
GB10J-2
GW10H-1
(SEE NOTE 9 & 13)
SEE DETAIL "R"

SECTION H-H
ZONE 17B (TYP 54 PLCS)

LDW280-51896	SH. 3

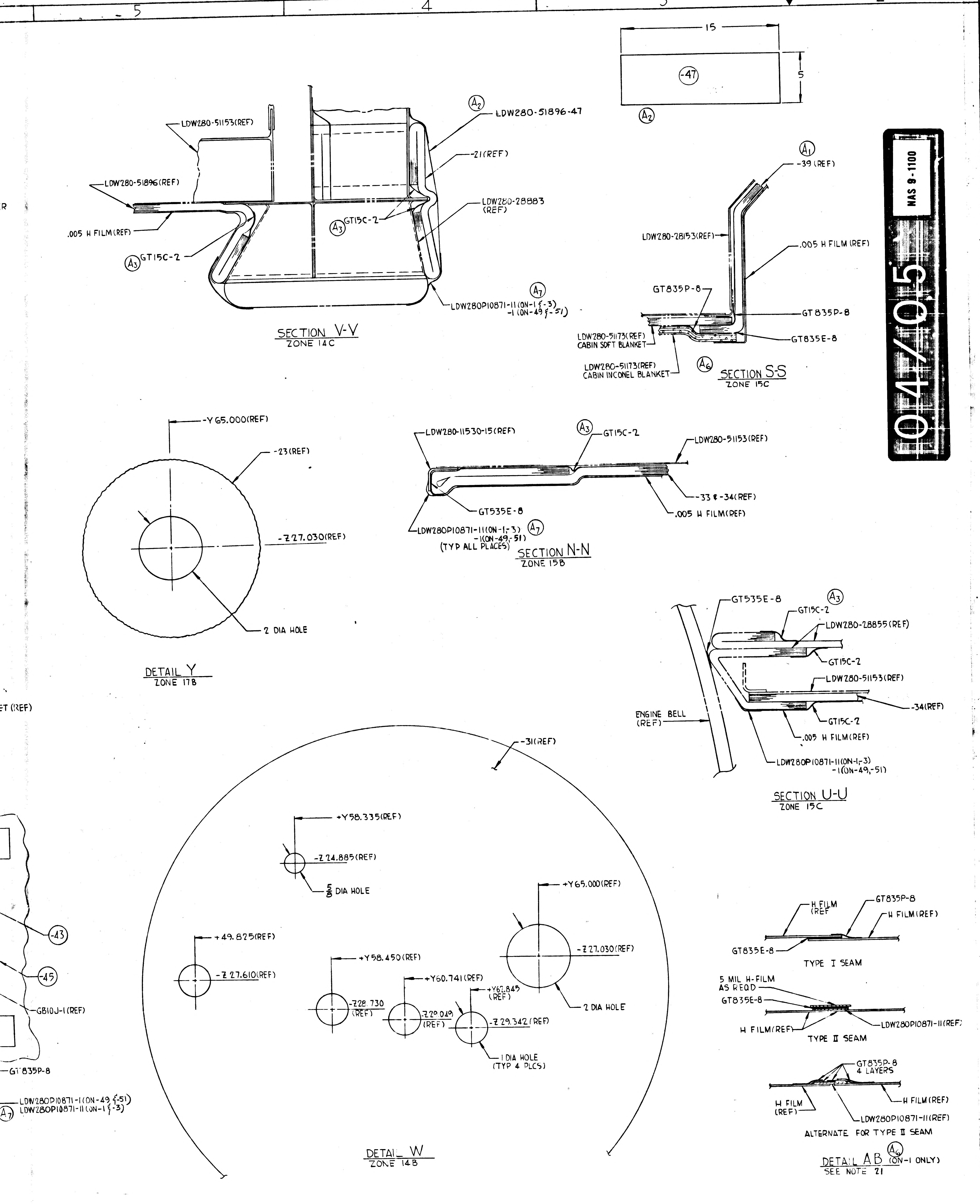
5
4
3
2
1
15
5
-47
A2
LDW280-51153(REF)
LDW280-51896-47
LDW280-51896(REF)
-21(REF)
.005 H FILM(REF)
A3 GT15C-2
LDW280-28883 (REF)
LDW280P10871-11(ON-1 & -3) -1(ON-49 & -51)
A7
SECTION V-V
ZONE 14C
A1
-39 (REF)
LDW280-28153(REF)
.005 H FILM (REF)
GT835P-8
GT835P-8
GT835E-8
LDW280-51173(REF) CABIN SOFT BLANKET
LDW280-51173(REF) CABIN INCONEL BLANKET
A6
SECTION S-S
ZONE 15C
-Y65.000(REF)
-23(REF)
-Z27.030(REF)
2 DIA HOLE
DETAIL Y
ZONE 17B
LDW280-11530-15(REF)
GT15C-2
LDW280-51153(REF)
-33 & -34(REF)
.005 H FILM(REF)
GT535E-8
LDW280P10871-11(ON-1,-3) -1(ON-49,-51)
(TYP ALL PLACES)
SECTION N-N
ZONE 15B
GT535E-8
GT15C-2
LDW280-28855(REF)
GT15C-2
LDW280-51153(REF)
-34(REF)
ENGINE BELL (REF)
GT15C-2
.005 H FILM(REF)
LDW280P10871-11(ON-1,-3) -1(ON-49,-51)
SECTION U-U
ZONE 15C
ET (REF)
R
-31(REF)
+Y58.335(REF)
-Z24.885(REF)
5/8 DIA HOLE
+Y65.000(REF)
-Z27.030(REF)
+49.825(REF)
-Z27.610(REF)
+Y58.450(REF)
-Z28.730 (REF)
+Y60.741(REF)
-Z29.049 (REF)
+Y62.845 (REF)
-Z29.342(REF)
1 DIA HOLE (TYP 4 PLCS)
2 DIA HOLE
-43
-45
GB10J-1(REF)
GT835P-8
LDW280P10871-1(ON-49 & -51)
A7 LDW280P10871-11(ON-1 & -3)
DETAIL W
ZONE 14B
H FILM (REF)
GT835P-8
H FILM(REF)
GT835E-8
TYPE I SEAM
5 MIL H-FILM AS REQD
GT835E-8
H FILM(REF)
LDW280P10871-11(REF)
TYPE II SEAM
GT835P-8 4 LAYERS
H FILM(REF)
H FILM (REF)
LDW280P10871-11(REF)
ALTERNATE FOR TYPE II SEAM
DETAIL AB (ON-1 ONLY)
A6
SEE NOTE 21

04/05

NAS 9-1100

NOTES

1. -19 -21 & -23 BLANKET CONSISTS OF 5 LAYERS "H" FILM & 20 LAYERS MYLAR.
2. -25 BLANKET ~~CONSISTS OF 16 LAYERS "H" FILM & 9 LAYERS MYLAR.~~
3. ~~-27 CONSISTS OF 16 LAYERS "H" FILM~~ & 9 LAYERS MYLAR.
4. ~~-29 CONSISTS OF 16 LAYERS "H" FILM & 9 LAYERS MYLAR.~~
5. -31 CONSISTS OF 5 LAYERS "H" FILM & 20 LAYERS MYLAR.
6. -33, -34 -39 & -41 CONSISTS OF 25 LAYERS "H" FILM.
7. SYMBOLS:
   - ● 7/16 DIA HOLE (FOR STANDOFF) LOCATEI FROM NOMINAL BLANKET TEMPLATE.
   - ⊕ VENT (LDW280P14391-1 & -3)
   - ○ 7/16 DIA HOLE (FOR PRESSURE TAP) LOCATE FROM NOMINAL BLANKET TEMPLATE.
8. -35, -37, -45 & -47 CONSISTS OF ONE LAYER LDW280P17689-13 "H" FILM WITH TEMPERATURE CONTROL SURFACE COATING ON EXTERIOR SURFACE.
9. TO FACILITATE HANDLING TEMPORARY HARDWARE MAY BE SUBSTITUTED PRIOR TO INSTALLATION.
10. FINAL CONFIGURATION (WITH FOLD & SEAM LOCATION) OF BLANKET ASSY SHALL BE DETERMINED FROM ENGR APPROVED MASTER TEMPLATE FROM A 103% SCALE MOCKUP.
11. BAY VENTS TO BE INSTALLED PER LPC280-9
12. BLANKET VENTS TO BE MADE & INSTALLED PER LPC280-2
13. BOND IN ACCORDANCE WITH LSP-14-2250 USING EPON 934, CURE RANGE I.
14. ON-23 & -31 ASSYS ONE LAYER OF "H" FILM TO BE ON INTERIOR SURFACE OF BLANKET. THE REMAINING LAYERS ALL EXTERIOR.
15. BASE BLANKETS TO BE MADE PER LPC280-1.
16. -43 BLANKETS TO CONSIST OF 10 LAYERS OF 1/2 MIL "H" FILM.
17. SEAM PROCEDURE PER LPC280-3
18. REPAIR PROCEDURE PER LPC280-8
19. PERMISSIBLE DEVIATIONS & REPAIR PR
20. ALL GB10J-1 RETAINERS THAT ARE BONDED PER TO WITHSTAND A LOAD OF 4 LBS. IF BOND F
21. UPON FINAL BLANKET INSTALLATION TA BLANKET SEAMS AS SHOWN ON DETAIL
22. FOR-53; CRACKS, WRINKEES & PINHO SPECIFIED ON LPC280-5 ARE ACC
23. OVERLAP INCONEL STRIP 1" MIN. AT & 2 1/2" MIN. AT EVERY CORNER ONLY.)
24. THIS DWG AFFECTED BY THE FOLLOWING EFFECTIVITY AND MODIFICATION.

	GRUMMAN AIR	
	SIZE K	CODE IDENT 2651
LM MODEL OR END ITEM	SCALE NONE	

SUPERSEDES LDW280-51896

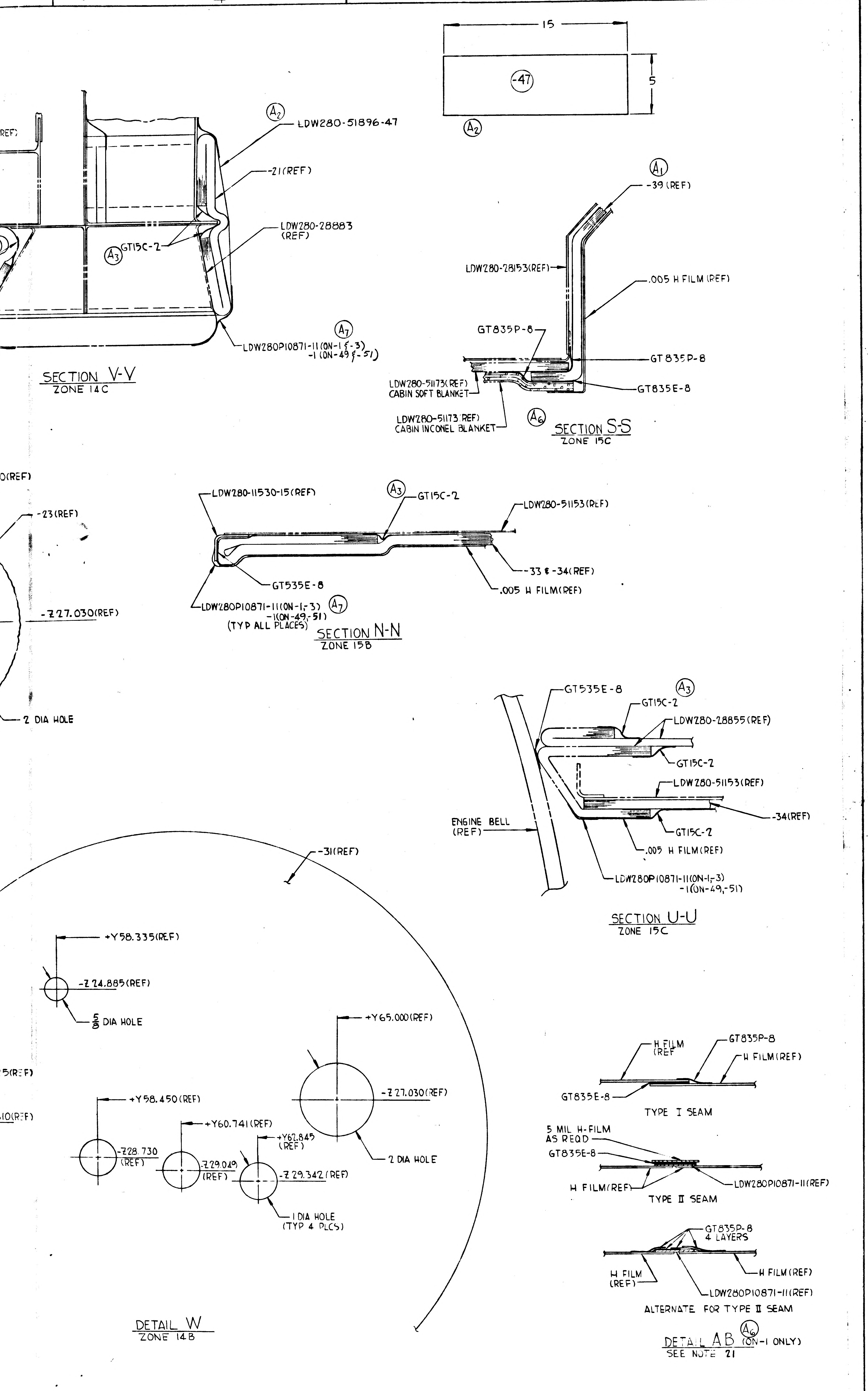

LDW280-51896-47
-21(REF)
LDW280-28883
(REF)
GT15C-2
A3
A2
A7
LDW280P10871-11(ON-1,-3)
-1(ON-49,-51)
SECTION V-V
ZONE 14C
15
5
-47
A1
-39 (REF)
LDW280-28153(REF)
.005 H FILM (REF)
GT835P-8
GT 835P-8
GT835E-8
LDW280-51173(REF)
CABIN SOFT BLANKET
LDW280-51173 REF)
CABIN INCONEL BLANKET
A6
SECTION S-S
ZONE 15C
-23(REF)
-Z 27.030(REF)
2 DIA HOLE
LDW280-11530-15(REF)
GT15C-2
LDW280-51153(REF)
-33 & -34(REF)
.005 H FILM(REF)
GT535E-8
LDW280P10871-11(ON-1,-3)
-1(ON-49,-51)
(TYP ALL PLACES)
SECTION N-N
ZONE 15B
GT535E-8
GT15C-2
LDW280-28855(REF)
GT15C-2
LDW280-51153(REF)
-34(REF)
GT15C-2
.005 H FILM(REF)
LDW280P10871-11(ON-1,-3)
-1(ON-49,-51)
ENGINE BELL
(REF)
SECTION U-U
ZONE 15C
-31(REF)
+Y58.335(REF)
-Z 24.885(REF)
5/8 DIA HOLE
+Y65.000(REF)
-Z 27.030(REF)
2 DIA HOLE
+Y58.450(REF)
-Z28.730
(REF)
+Y60.741(REF)
-Z29.049
(REF)
+Y62.845
(REF)
-Z 29.342(REF)
1 DIA HOLE
(TYP 4 PLCS)
DETAIL W
ZONE 14B
H FILM
(REF
GT835P-8
H FILM(REF)
GT835E-8
TYPE I SEAM
5 MIL H-FILM
AS REQD
GT835E-8
H FILM(REF)
LDW280P10871-11(REF)
TYPE II SEAM
GT835P-8
4 LAYERS
H FILM
(REF)
H FILM(REF)
LDW280P10871-11(REF)
ALTERNATE FOR TYPE II SEAM
DETAIL AB
A6
(ON-1 ONLY)
SEE NOTE 21

NOTES

1. -19-21 & -23 BLANKET CONSISTS OF 5 LAYERS "H" FILM & 20 LAYERS MYLAR.
2. -25 BLANKET CONSISTS OF 16 LAYERS ~~"H" FILM & 9 LAYERS MYLAR~~
3. ~~-27 CONSISTS OF 16 LAYERS "H" FILM~~ & 9 LAYERS MYLAR.
4. ~~-29 CONSISTS OF 16 LAYERS "H" FILM & 9 LAYERS MYLAR.~~
5. -31 CONSISTS OF 5 LAYERS "H" FILM & 20 LAYERS MYLAR.
6. -33, -34-39 & -41 CONSISTS OF 25 LAYERS "H" FILM.
7. SYMBOLS:
   - ● 7/16 DIA HOLE (FOR STANDOFF) LOCATED FROM NOMINAL BLANKET TEMPLATE.
   - ⊕ VENT (LDW280P14391-1 & -3)
   - ○ 7/16 DIA HOLE (FOR PRESSURE TAP) LOCATED FROM NOMINAL BLANKET TEMPLATE.
8. -35, -37, -45 & -47 CONSISTS OF ONE LAYER LDW280P17689-13 "H" FILM WITH TEMPERATURE CONTROL SURFACE COATING ON EXTERIOR SURFACE.
9. TO FACILITATE HANDLING TEMPORARY HARDWARE MAY BE SUBSTITUTED PRIOR TO INSTALLATION.
10. FINAL CONFIGURATION (WITH FOLD & SEAM LOCATION) OF BLANKET ASSY SHALL BE DETERMINED FROM ENGR APPROVED MASTER TEMPLATE FROM A 103% SCALE MOCKUP.
11. BAY VENTS TO BE INSTALLED PER LPC280-9
12. BLANKET VENTS TO BE MADE & INSTALLED PER LPC280-2
13. BOND IN ACCORDANCE WITH LSP-14-22500 USING EPON 934, CURE RANGE I.
14. ON-23 & -31 ASSYS ONE LAYER OF "H" FILM TO BE ON INTERIOR SURFACE OF BLANKET. THE REMAINING LAYERS ALL EXTERIOR.
15. BASE BLANKETS TO BE MADE PER LPC280-1.
16. -43 BLANKETS TO CONSIST OF 10 LAYERS OF 1/2 MIL "H" FILM.
17. SEAM PROCEDURE PER LPC280-3
18. REPAIR PROCEDURE PER LPC280-8
19. PERMISSIBLE DEVIATIONS & REPAIR PROCEDURE PER LPC280-20
20. ALL GB10J-1 RETAINERS THAT ARE BONDED PER NOTE 11 ARE TO BE PULL TESTED TO WITHSTAND A LOAD OF 4 LBS. IF BOND FAILS, REBOND & RETEST.
21. UPON FINAL BLANKET INSTALLATION TAPE ALL 5 MIL H-FILM BLANKET SEAMS AS SHOWN ON DETAIL "AB". (ON-1 INSTL ONLY)
22. FOR-53; CRACKS, WRINKLES & PINHOLES IN EXCESS OF LIMITS SPECIFIED ON LPC280-5 ARE ACCEPTABLE.
23. OVERLAP INCONEL STRIP 1" MIN. AT EVERY STRAIGHT JOINT & 2 1/2" MIN. AT EVERY CORNER JOINT. (ON UNDERSIDE ONLY.)
24. THIS DWG AFFECTED BY THE FOLLOWING LFM. SEE LFM # 95 FOR EFFECTIVITY AND MODIFICATION.

MANUFACTURING OPERATIONS UNLESS OTHERWISE SPECIFIED NOTES CHECKED ✓ APPLY TO THIS DWG.	
PART NUMBER AND ALL OTHER MARKINGS IN REGION MARKED ⊠ USE BOTH SIDES IF NECESSARY.	
FILLET AND INSIDE CORNER RADII TOLERANCES .016R TO .062R ± .010 .063R TO .250R ± .015 OVER .250R ± .030	
DEPTH SHOWN FOR TAPPED HOLES IS FULL THDS. 2-3 IMP THDS. BEYOND PERMISSIBLE.	
EXTERNAL THREAD LENGTH SHOWN INCLUDES 2 IMPERFECT THREADS MAX.	
DO NOT CADMIUM PLATE & PAINT HOLES OR SURFACES MARKED WITH DOUBLE ASTERISK.	
MISMATCH STEP OF ± .005 PERMISSIBLE DUE TO CHANGE OF CUTTERS AT INSIDE INTERSECTING SURFACES.	
DIAMETERS MARKED MUST BE CONCENTRIC WITHIN FULL INDICATOR READING	
HOLES MUST BE KEPT FREE OF CHROME PLATING SOLUTION.	
ALL DIMENSIONS SHOWN TO BE MET AFTER CADMIUM PLATING. THICKNESS OF PLATE .0003 MIN. TO .0005 MAX. MIN. THICKNESS TO BE .0002 ON THREADED AREAS. NO ALLOWANCE FOR PLATING IN HOLES	
125 √ SURFACE ROUGHNESS INCLUDING REAMED HOLES PER MIL-STD-10	
200 √ FOR ALL DRILLED HOLES	
REMOVE ALL BURRS. BREAK ALL EDGES .015-.031	
INSPECTION INFORMATION MINIMUM PERMISSIBLE AVERAGE EDGE DISTANCE MARKED IS	
SYMBOL √ DENOTES SURFACE TO BE MACHINED	
UNLESS OTHERWISE SPECIFIED TOLERANCE ON FLANGES IS ± 1/32	
LENGTHS OF AN, NAS & MS AL ALY RIVETS SHORTER THAN 1 INCH ARE NOT SPECIFIED.	
TOLERANCE ON LOFTED DELINEATIONS IS	

DWG SIZE 40 X 144

PRINTING INFO ONLY
FULL SIZE SHEET AREA (42 X 156)= 546 SQ. FT.
1/2 SIZE SHEET AREA (1/4 OF FULL)= 136.5 SQ. FT.

PRINT TRIM LINE

05/05

NAS 9-1100

LDW280-51896 A

LDW280-51896 A

	GRUMMAN AIRCRAFT ENGRG CORP., BETHPAGE, L. I., NEW YORK			
	SIZE K	CODE IDENT NO. 26512	LDW280-51896	A
LM				
MODEL OR END ITEM	SCALE NONE		SHEET 3.00	

(H)

SUPERSEDES LDW280-51896 NO CH. 11-16-66

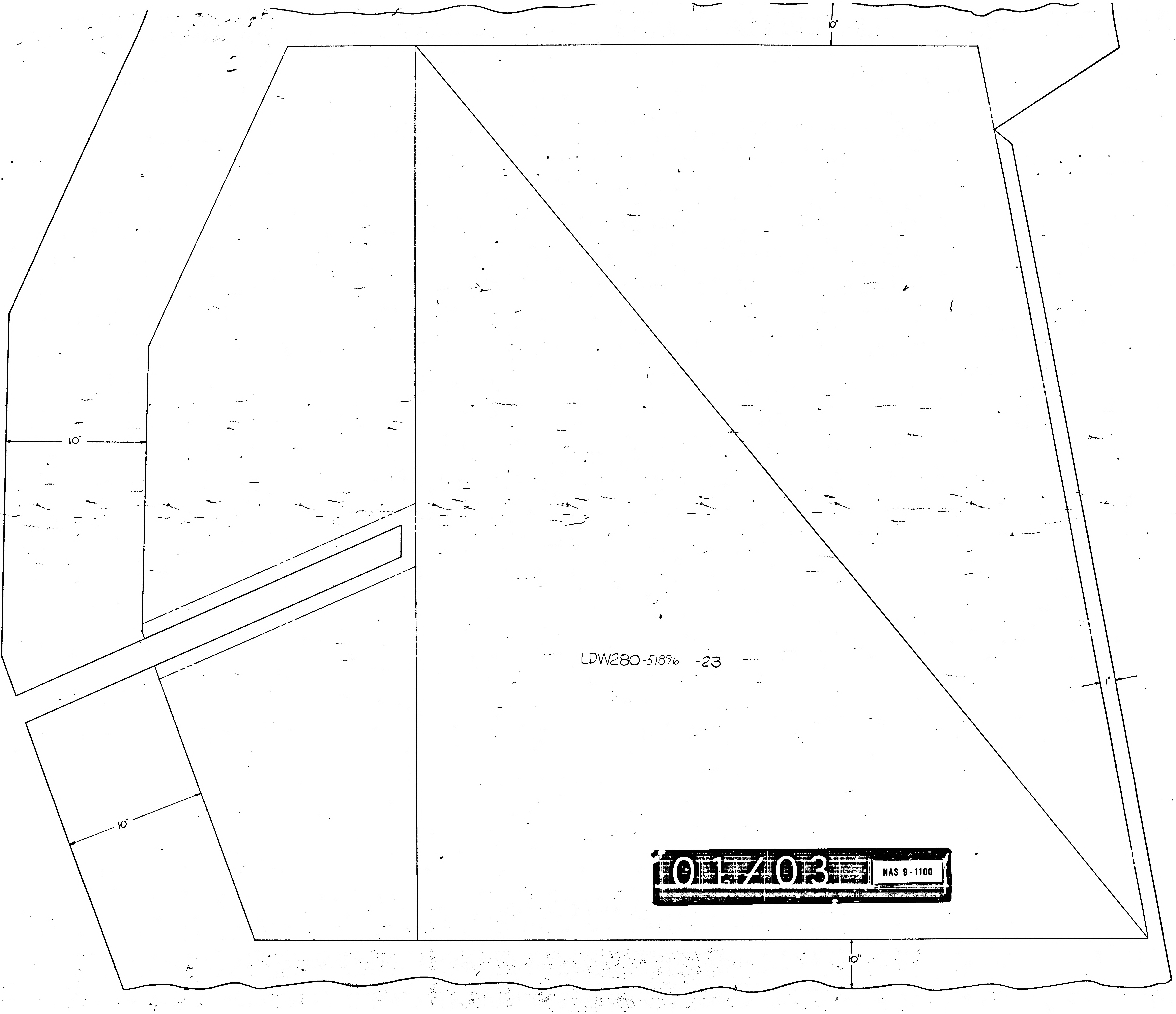
10"
10"
10"
1"
10"
LDW280-51896 -23

01/03 NAS 9-1100

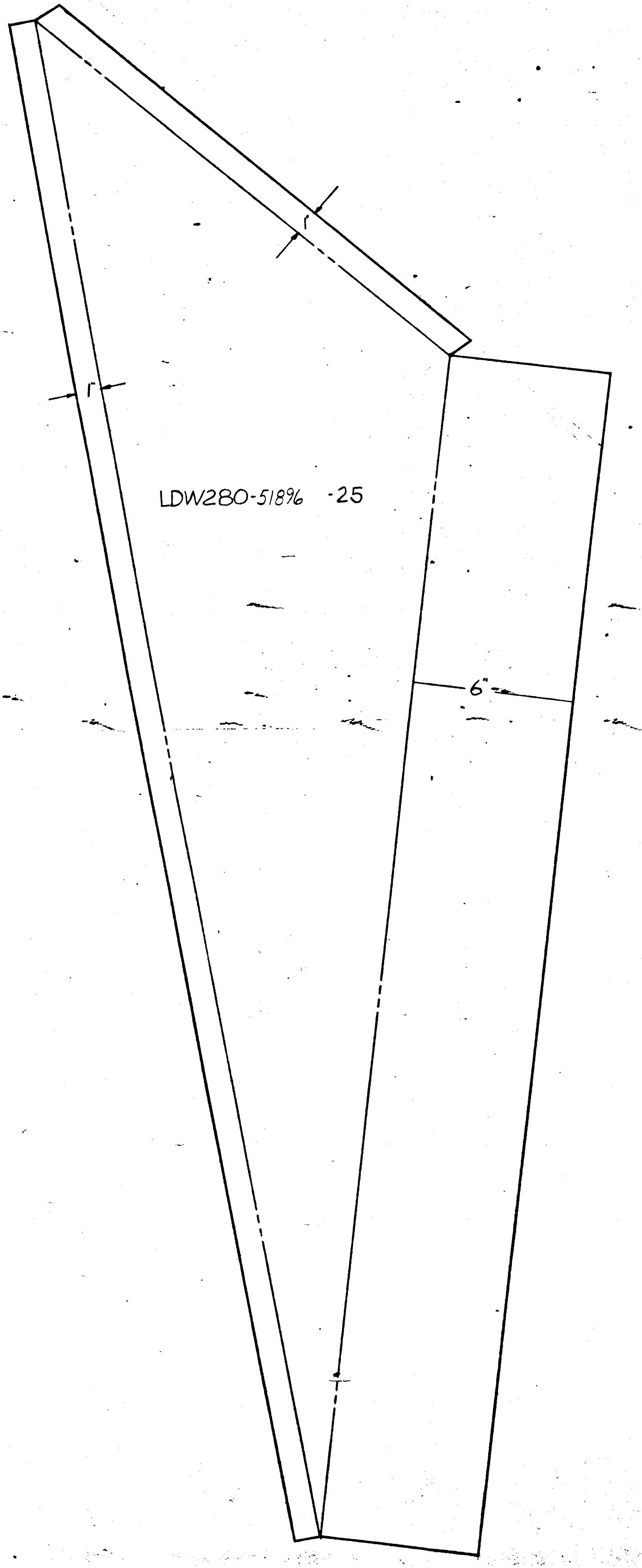
1"
1"
LDW280-51896 -25
6"

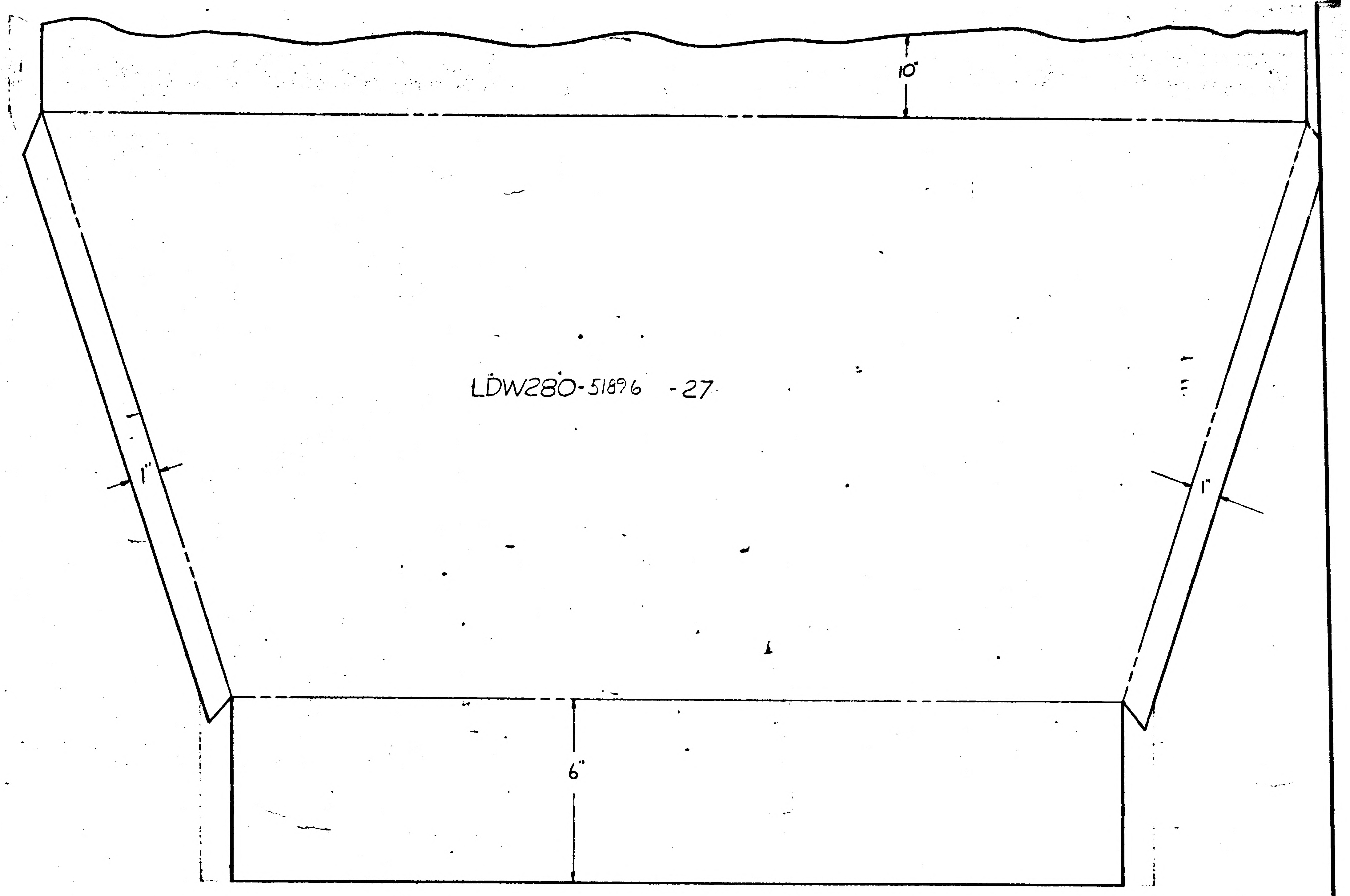
10"
LDW280-51896 -27
1"
1"
6"

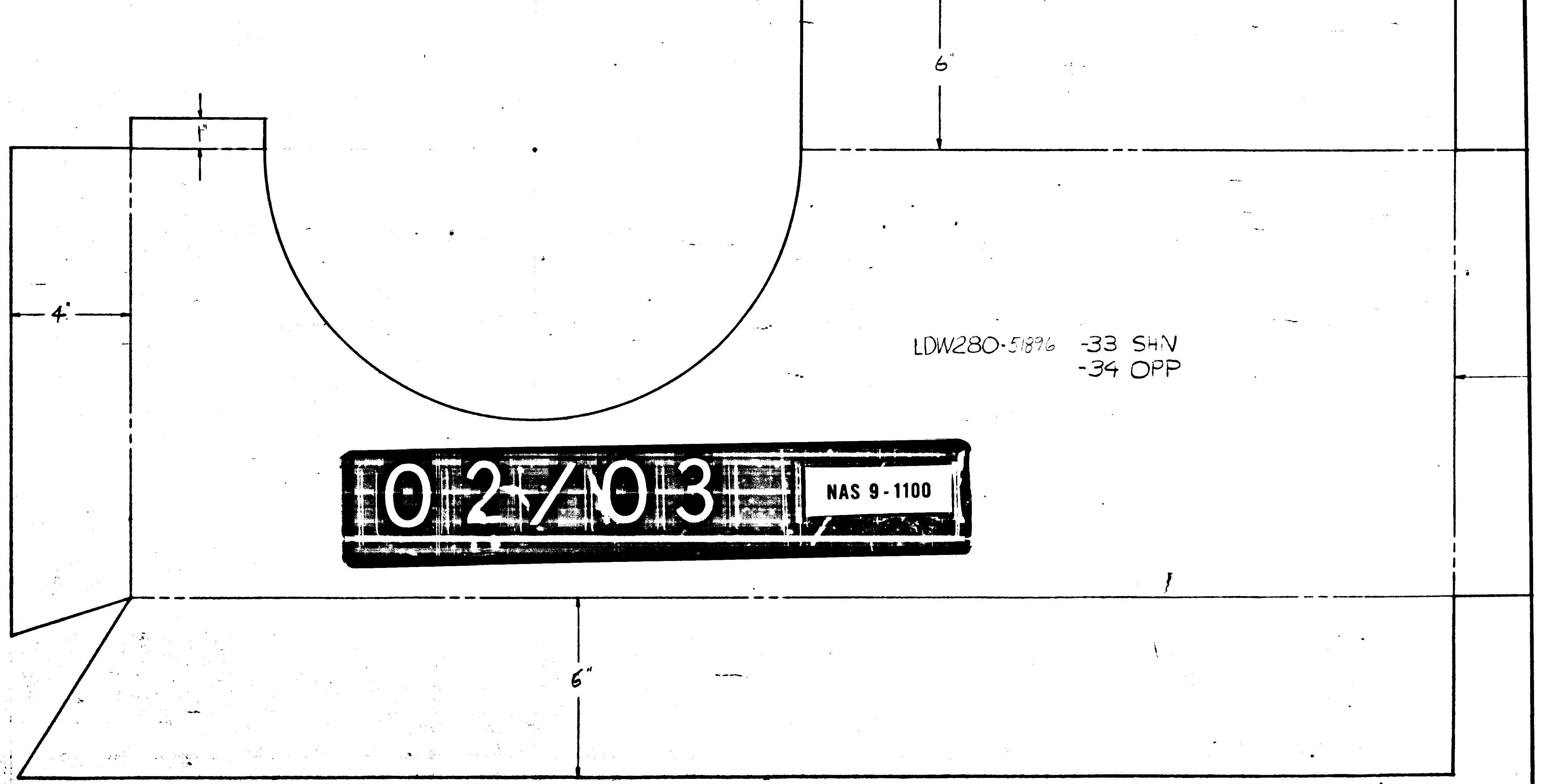
6"
1"
4"
LDW280-51896 -33 SHN
-34 OPP
6"

02/03 NAS 9-1100

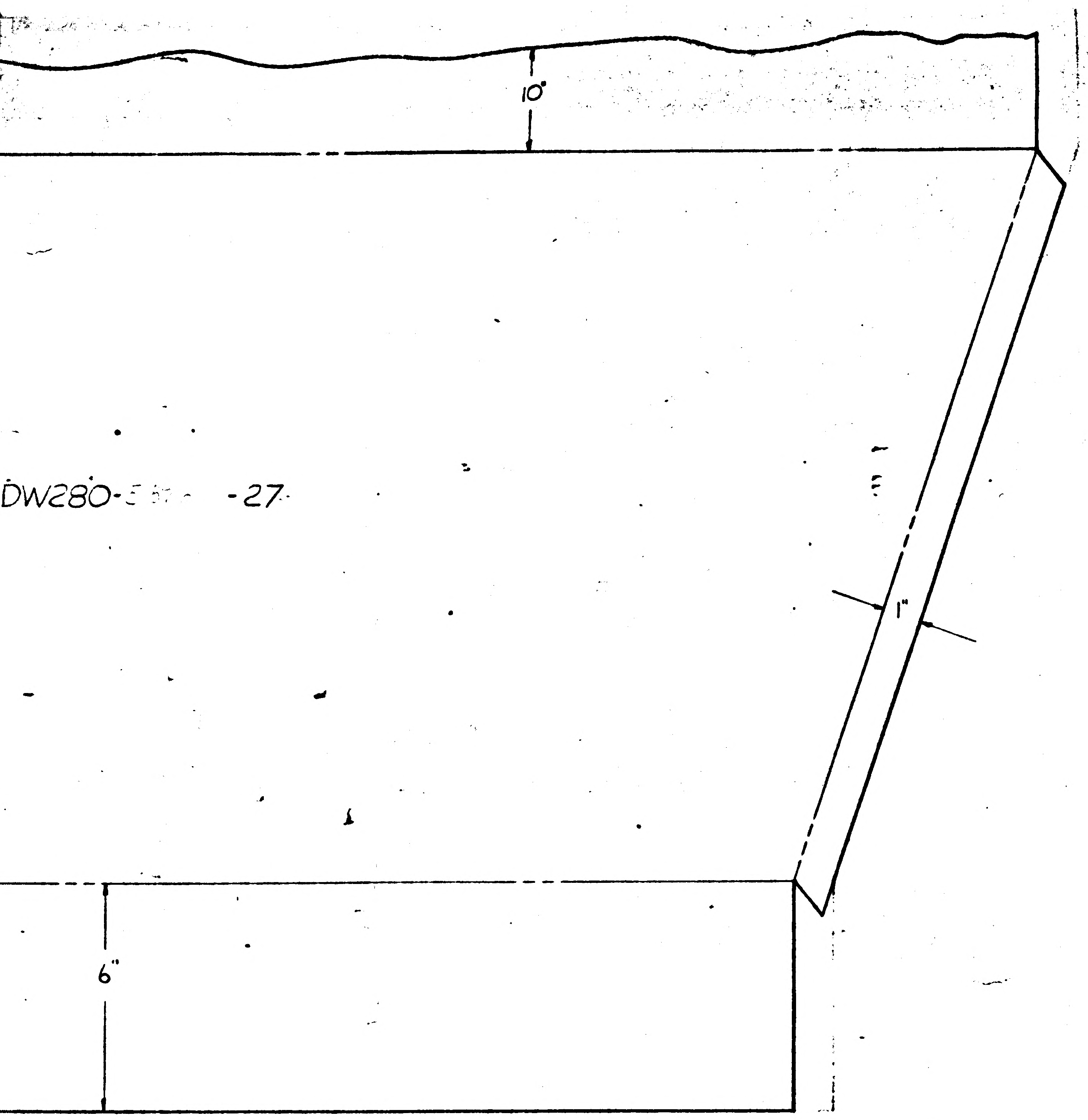

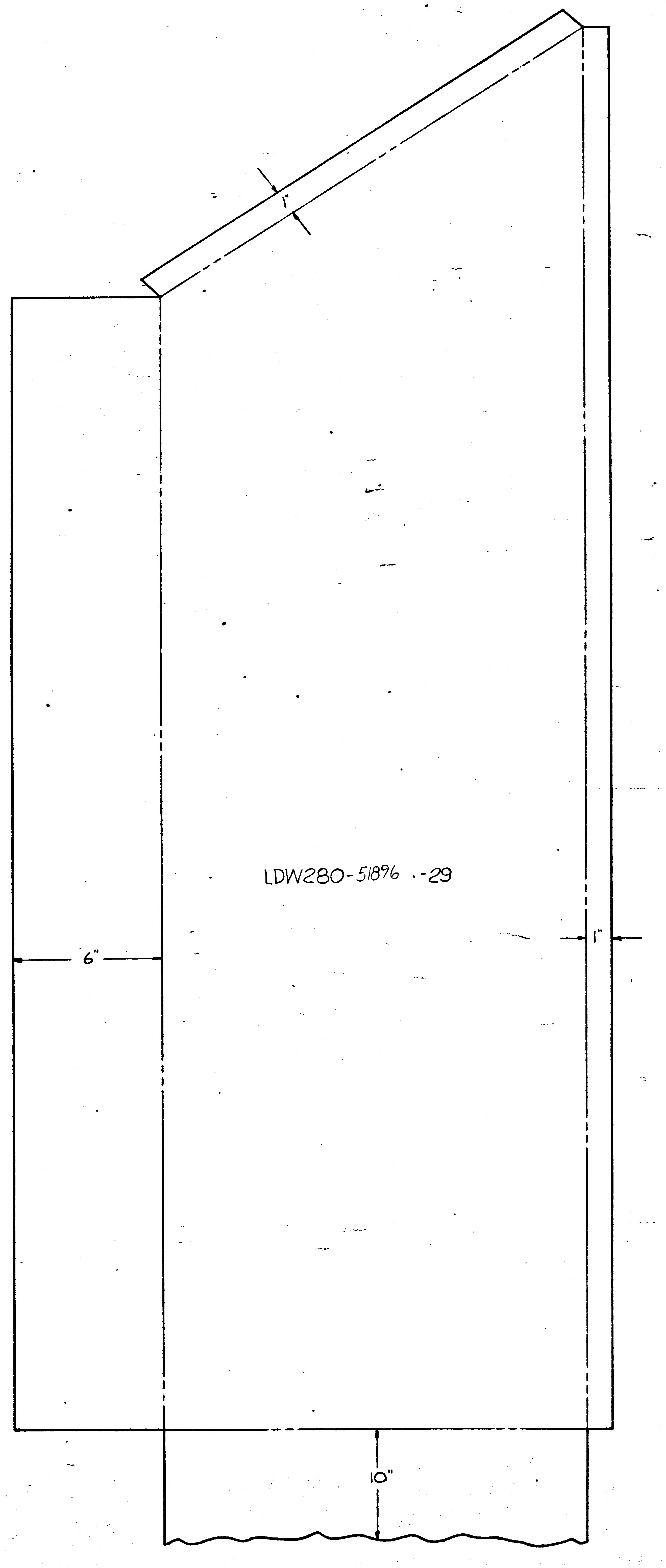

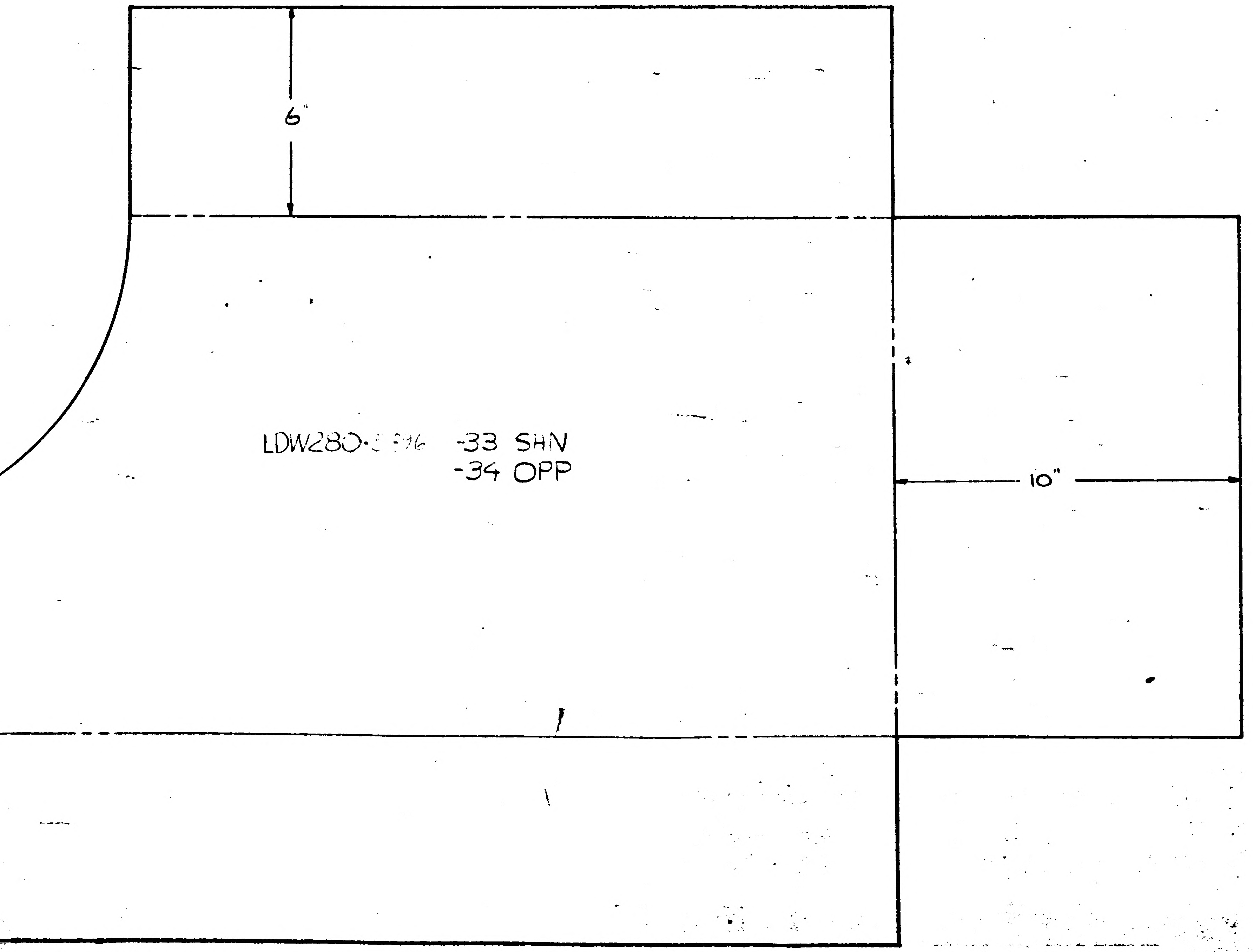

MANUFACTURING OPERATIONS
UNLESS OTHERWISE SPECIFIED
NOTES CHECKED √ APPLY TO THIS DWG.

PART NUMBER AND ALL OTHER MARKINGS IN REGION MARKED ⊠ USE BOTH SIDES IF NECESSARY.	✓
FILLET AND INSIDE CORNER RADII TOLERANCES .016R TO .062R ± .010 .063R TO .250R ± .015 OVER .250R ± .030	
DEPTH SHOWN FOR TAPPED HOLES IS FULL THDS. 2-3 IMP THDS. BEYOND PERMISSIBLE.	
EXTERNAL THREAD LENGTH SHOWN INCLUDES 2 IMPERFECT THREADS MAX.	
DO NOT CADMIUM PLATE & PAINT HOLES OR SURFACES MARKED WITH DOUBLE ASTERISK.	
MISMATCH STEP OF ± .005 PERMISSIBLE DUE TO CHANGE OF CUTTERS AT INSIDE INTERSECTING SURFACES.	
DIAMETERS MARKED MUST BE CONCENTRIC WITHIN FULL INDICATOR READING	
HOLES MUST BE KEPT FREE OF CHROME PLATING SOLUTION.	
ALL DIMENSIONS SHOWN TO BE MET AFTER CADMIUM PLATING. THICKNESS OF PLATE .0003 MIN. TO .0005 MAX. MIN. THICKNESS TO BE .0002 ON THREADED AREAS. NO ALLOWANCE FOR PLATING IN HOLES	
$\overline{125}\surd$ SURFACE ROUGHNESS INCLUDING REAMED HOLES PER MIL-STD-10	
$\overline{200}\surd$ FOR ALL DRILLED HOLES	
REMOVE ALL BURRS. BREAK ALL EDGES .015-.031	
INSPECTION INFORMATION MINIMUM PERMISSIBLE AVERAGE EDGE DISTANCE MARKED IS	
SYMBOL $\surd$ DENOTES SURFACE TO BE MACHINED	
UNLESS OTHERWISE SPECIFIED TOLERANCE ON FLANGES IS ± 1/32	
LENGTHS OF AN, NAS & MS AL ALY RIVETS SHORTER THAN 1 INCH ARE NOT SPECIFIED.	
TOLERANCE ON LOFTED DELINEATIONS IS	

03/03 NAS 9-1100

	GRUMMAN AIRCRAFT ENGRG CORP., BETHPAGE, L. I., NEW YORK			
	SIZE J	CODE IDENT NO. 26512	LDW-280-51896	
MODEL OR ENG ITEM	SCALE 1/2		SHEET 4	

1

This is an orig.

01/02 **NAS 9-1100**

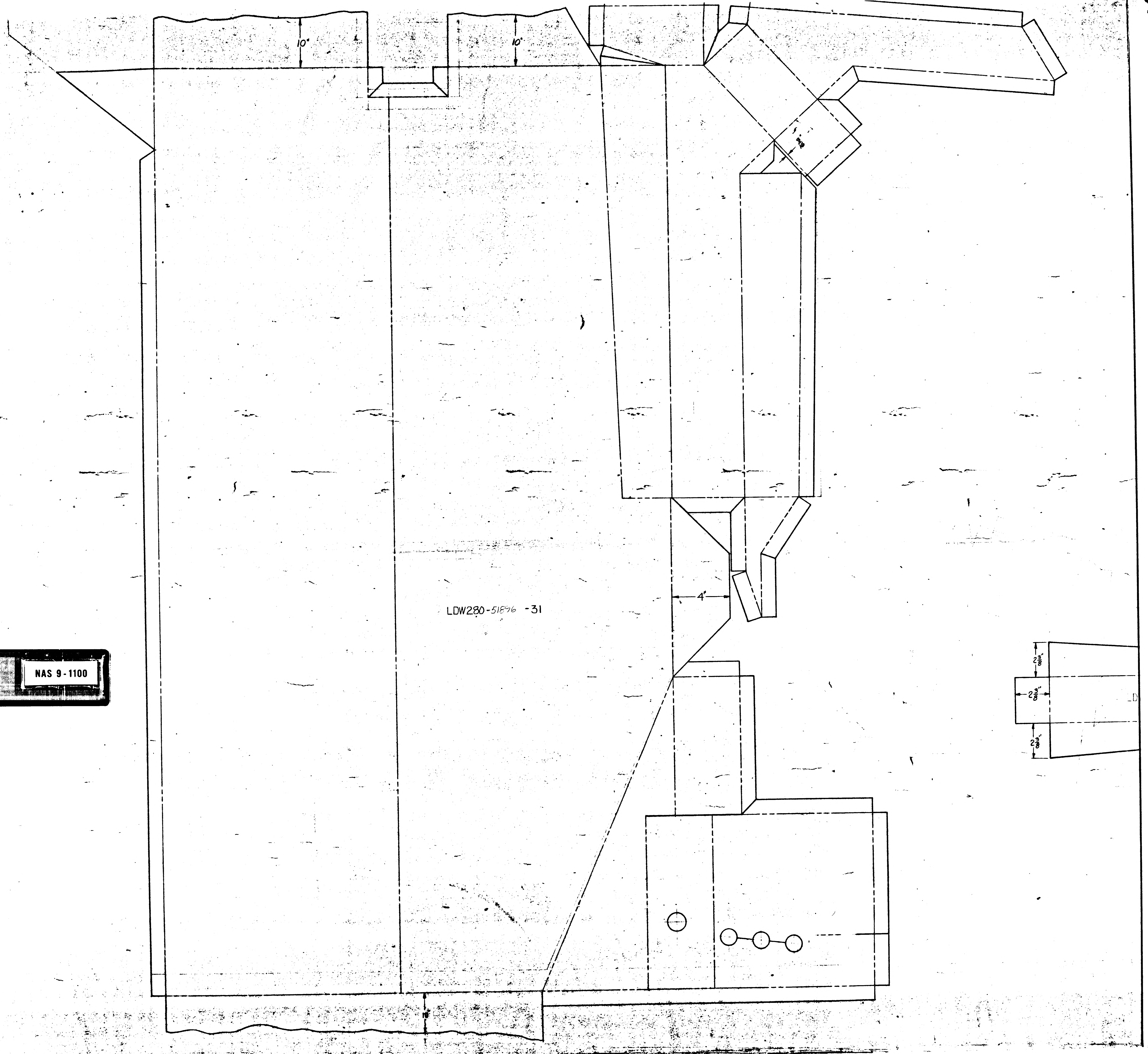
10"
10"
4"
LDW280-51896 -31
2 3/8"
2 3/8"
2 3/8"

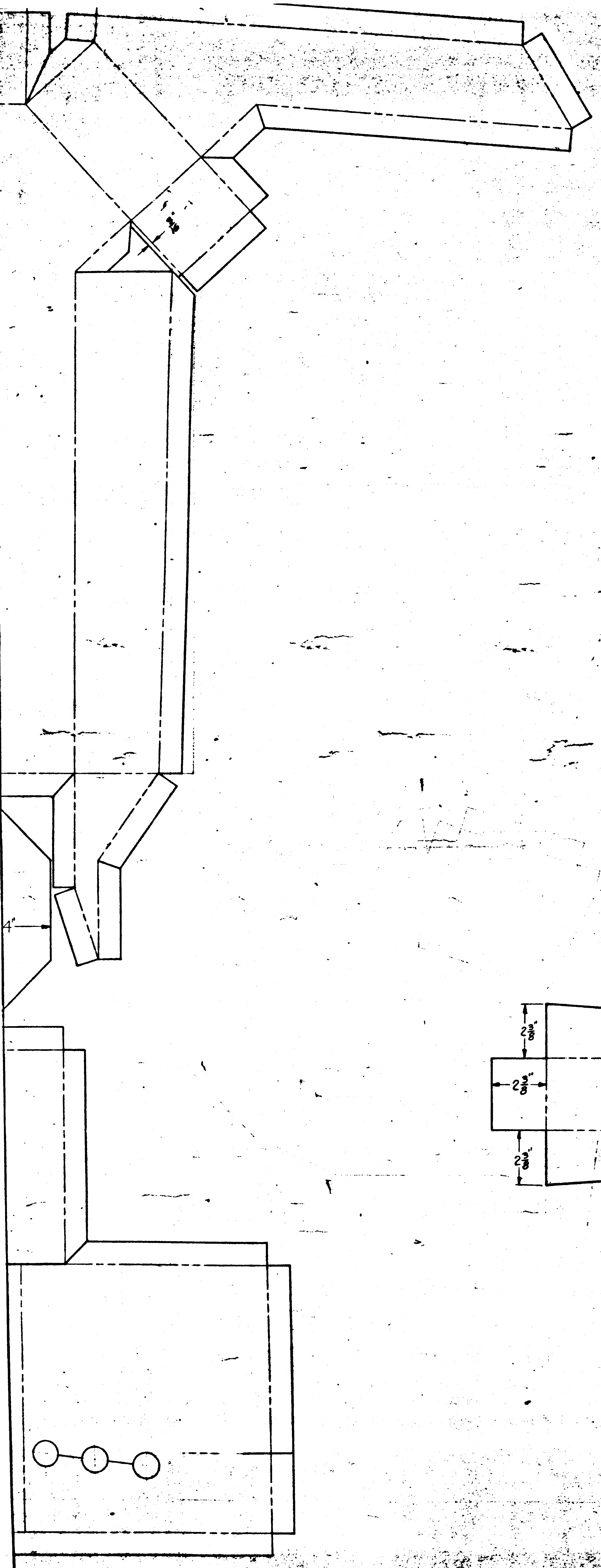

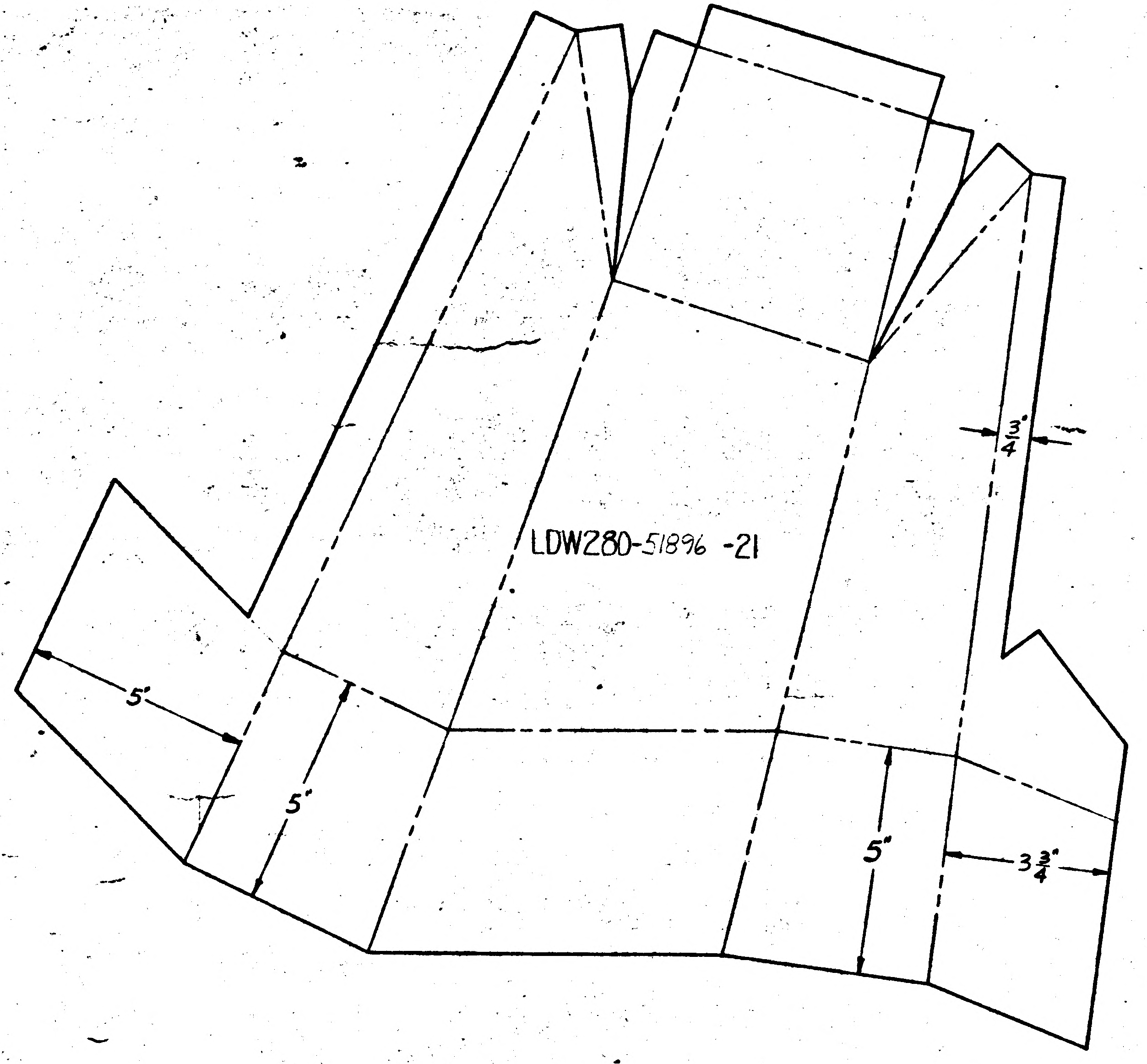

NOTE:
ALL TABS 1" UNLESS
OTHERWISE INDICATED.

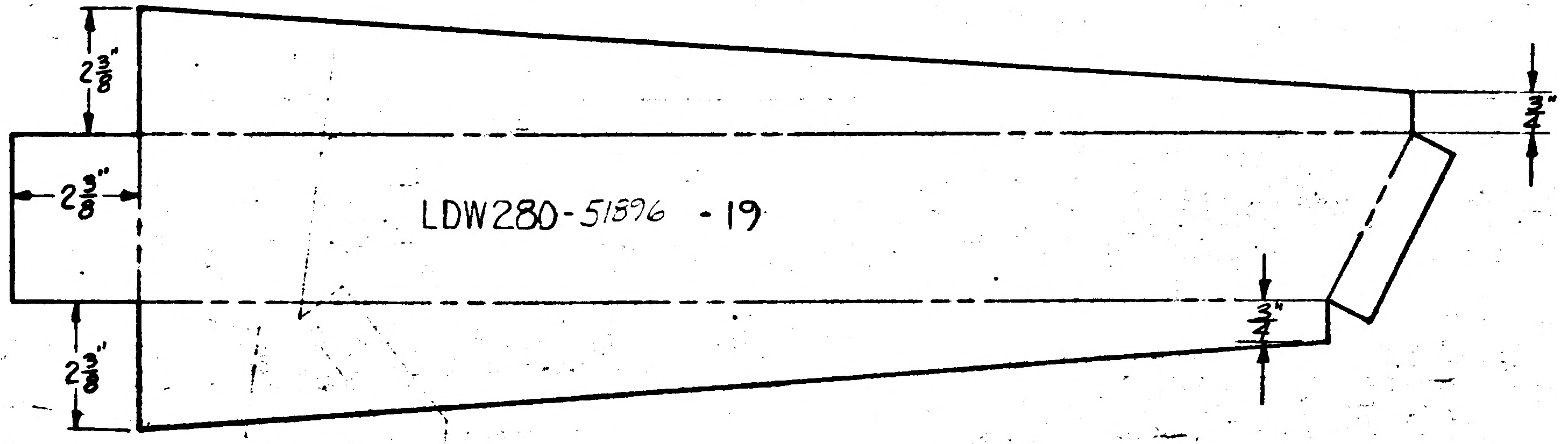

MANUFACTURING OPERATIONS
UNLESS OTHERWISE SPECIFIED
NOTES CHECKED √ APPLY TO THIS DWG.

PART NUMBER AND ALL OTHER MARKINGS IN REGION MARKED ⊠ USE BOTH SIDES IF NECESSARY.	✓
FILLET AND INSIDE CORNER RADII TOLERANCES .016R TO .062R ± .010 .063R TO .250R ± .015 OVER .250R ± .030	
DEPTH SHOWN FOR TAPPED HOLES IS FULL THDS. 2-3 IMP THDS. BEYOND PERMISSIBLE.	
EXTERNAL THREAD LENGTH SHOWN INCLUDES 2 IMPERFECT THREADS MAX.	
DO NOT CADMIUM PLATE & PAINT HOLES OR SURFACES MARKED WITH DOUBLE ASTERISK.	
MISMATCH STEP OF ± .005 PERMISSIBLE DUE TO CHANGE OF CUTTERS AT INSIDE INTERSECTING SURFACES.	
DIAMETERS MARKED MUST BE CONCENTRIC WITHIN FULL INDICATOR READING	
HOLES MUST BE KEPT FREE OF CHROME PLATING SOLUTION.	
ALL DIMENSIONS SHOWN TO BE MET AFTER CADMIUM PLATING. THICKNESS OF PLATE .0003 MIN. TO .0005 MAX. MIN. THICKNESS TO BE .0002 ON THREADED AREAS. NO ALLOWANCE FOR PLATING IN HOLES	
$\sqrt{125}$ SURFACE ROUGHNESS INCLUDING REAMED HOLES PER MIL-STD-10	
$\sqrt{200}$ FOR ALL DRILLED HOLES	
REMOVE ALL BURRS. BREAK ALL EDGES .015-.031	
INSPECTION INFORMATION MINIMUM PERMISSIBLE AVERAGE EDGE DISTANCE MARKED IS	
SYMBOL $\sqrt{}$ DENOTES SURFACE TO BE MACHINED	
UNLESS OTHERWISE SPECIFIED TOLERANCE ON FLANGES IS ± 1/32	
LENGTHS OF AN, NAS & MS AL ALY RIVETS SHORTER THAN 1 INCH ARE NOT SPECIFIED.	
TOLERANCE ON LOFTED DELINEATIONS IS	

DWG SIZE 34 X

02/02 NAS 9-1100

GRUMMAN AIRCRAFT ENGRG CORP., BETHPAGE, L. I., NEW YORK			
SIZE J	CODE IDENT NO. 26512	LDW280-5	✓
MODEL OR END ITEM	SCALE		SHEET 5

this is an orig

01

NAS 9-1100

ENG 32.2 10-63

GRUMMAN AIRCRAFT ENGINEERING CORP.
CODE IDENT NO. 26512
ENGINEERING ORDER

DWG. NO. LDW280-51896		EO NO. A1
CONTROL INFO NO. LDW 280-A-4124		

DESCRIPTION OF E.O.

1. ON -3 ASSY REMOVED -25 & -29
2. ON-3 ASSY REMOVED -27 ADD -39 (SAME AS -27 EXCEPT MATL IS 25 LAYERS 1/2 MILL H-FILM ~(1) REQ'D/ASSY SEE NOTE 6)
3. REVISED NOTE 6 TO READ: -33, -34, -39 & -41 CONSISTS OF ETC.
4. ON -3 ASSY ADDED LDW 280-14441-9 (8) (SEE NOTE 11)
5. ON -3 ASSY ADDED -41 (10) (5" DIA PATCH ~ MATL 25 LAYERS 1/2 MILL H-FILM) (SEE NOTES 6 & 12)
6. ON -1 INSTL: ADDED -43 (54 REQ'D/INSTL) (4"x4" PATCH ~ 10 LAYERS 1/2 MIL H-FILM) (SEE NOTE 16 & DETAIL R)
7. ADDED NOTE 16 : -43 BLANKETS TO CONSIST OF 10 LAYERS OF 1/2 MIL H-FILM
8. ON -1 INSTL: ADDED -45 (54 REQ'D/INSTL) (6x6 PATCH ~ 1 LAYER 5 MIL H-FILM) (SEE NOTE 8 & DETAIL R)
9. REVISED NOTE 8 TO READ: -35, -37, -45 CONSISTS OF ETC.
10. ADDED DETAIL R (TYP 54 PLACES)

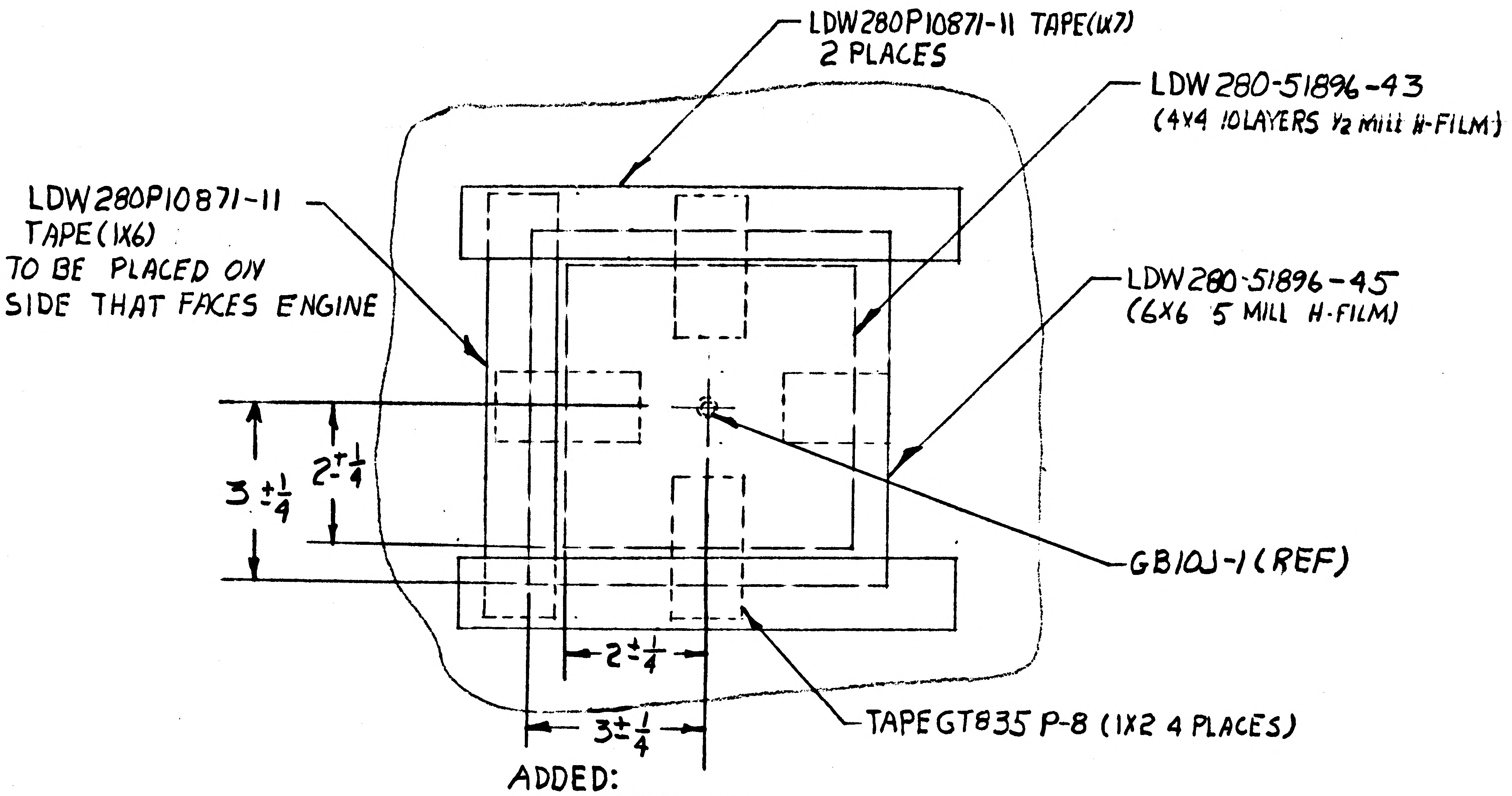

LDW280P10871-11 TAPE (1X7)
2 PLACES
LDW 280-51896-43
(4X4 10 LAYERS 1/2 MIL H-FILM)
LDW280P10871-11
TAPE (1X6)
TO BE PLACED ON
SIDE THAT FACES ENGINE
LDW280-51896-45
(6X6 5 MILL H-FILM)
3±1/4
2±1/4
GB10J-1 (REF)
2±1/4
3±1/4
TAPE GT835 P-8 (1X2 4 PLACES)

ADDED:
DETAIL R

THERMAL SHLD.

3

DETAIL SPEC REQ		CL II ENGRG CHG	✓	CL I ENGRG CHG	

REASON FOR EO	DESCRIPTION OF EO	GAEC EO RELEASE
To UPDATE B/M	NOTED	FR 12/10/6

MODEL	PROCURING ACTIVITY NO.	GAEC UNIT NO.	SUB CONTR UNIT NO.
LM		LM-1 (31)	
LM		LM-2 (32)	

DRAWING CHANGE REQD		DISPOSITION OF PARTS	
✓			✓
REVISE DWG	RECORD EO	REWORK	SCRAP

APPROVED BY								
DATE	12/8/66	12/8		12/7	12/8		12/9	12/9/66
#5	VDI	THERM	RELIAB. GROUP	GROUP LEADER	STRESS GROUP	LIAISON ENGRG	PROJ ENGRG	~~GOVT~~

PRIORITY	DRAWING TITLE	DRAWING NO.	EO NO.
C	BLANKET INSTL & ASSY ~ AIS-HIS EXTERIOR LOWER	LDW280-51896	A1

ISSUED BY G.T. HALL JR x7033 GROUP VDI

A

GRUMMAN AIRCRAFT ENGINEERING CORP.
CODE IDENT NO. 26512
ENGINEERING ORDER

ENG 32.1 REV 3-65

DWG. NO. LDW280-51896
EO NO. A2
CONTROL INFO NO. LDW280A-4484

1. ON -1 INSTL ADD (39) GR11C-7
2. ON -1 INSTL ADD -47 (5×15 PATCH MADE OF .005"H" FILM WITH COATED SURFACE. MTL LDW280P17589-13 (1 REQ/INSTL). ADD TO .005"H" FILM (REF) ON SECT. R-R SH3.
3. REVISE NOTE 8 TO READ: ON -35, -37, -45 & -47 CONSISTS OF ETC.

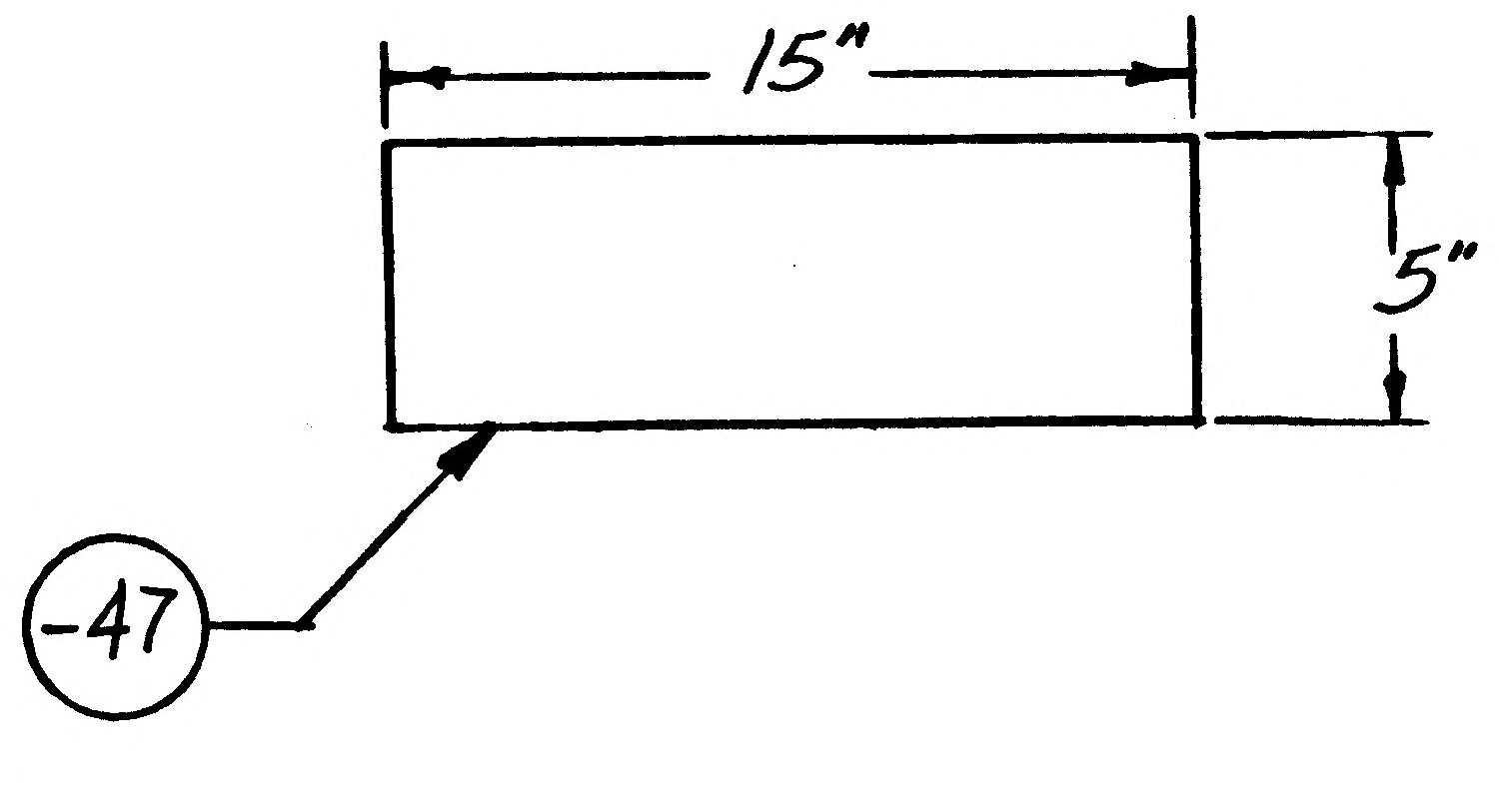

THERMAL SHLD
(3)

DETAIL SPEC REQ ☐ CL II ENGRG CHG ☐ CL I ENGRG CHG ☐

REASON FOR EO: GR11C-7 RETAINER REQUIRED TO ACCOMODATE HEATER RIBBONS. ADDITIONAL PATCH REQD.

DESCRIPTION OF EO: ON -1 INSTL ADDED GR11C-7 (39). ADDED -47 (5"x15" PATCH, . REVISED NOTE 8 TO READ: ON -35 -37, -45 & -47 CONSISTS OF ETC.

GAEC C EO RELEASE: 12/20

MODEL	EFFECTIVITY: PROCURING ACTIVITY NO.	GAEC UNIT NO.	SUB CONTR UNIT NO.
LM		LM-1 (31)	
LM		LM-2 (32)	

DRAWING CHANGE REQD: REVISE DWG ✓ RECORD EO
DISPOSITION OF PARTS: REWORK ✓ SCRAP

APPROVED BY		V.E.D.			—			
DATE		12/19		12/19	—		12/20	12 20 66
# 1	VDI	~~SUPPORT~~ THERMS	RELIAB. GROUP	GROUP LEADER	STRESS GROUP	LIAISON ENGRG	PROJ ENGRG	~~CONT~~

PRIORITY: C
DRAWING TITLE: BLANKET INSTL & ASSY. A/S ~ M/S ~ EXTERIOR LOWER
DRAWING NO.: LDW280-51896
EO NO.: A2

ISSUED BY L. Lupinaci X1441 SECTION VDI GROUP NO. 335 PL 35

01 NAS 9-1100

ENG 32.1 REV 3-65 3

GRUMMAN AIRCRAFT ENGINEERING CORP.
CODE IDENT NO. 26512
ENGINEERING ORDER

DWG. NO. LDW280-51896
EO NO. A3
CONTROL INFO NO. LDW280A-5736

(ADD) NOTE:
* SEAM PROCEDURE PER LPC280-3
** REPAIR PROCEDURE PER LPC280-8
*** PERMISSIBLE DEVIATIONS & REPAIR PROCEDURE PER LPC280-20

ADD GT15C-2 TAPE TO SECTIONS TO AGREE WITH LPC280-3.
ADD GT15C-2 TO B/M.

*, **, *** USE NEXT AVAILABLE NO.

DETAIL SPEC REQ ✓ CL II ENGRG CHG ☐ CL I ENGRG CHG ☐ 3

REASON FOR EO: LPC'S OMITTED ON DWG

DESCRIPTION OF EO: ADDED NOTE *, **, ***
ADDED GT15C-2 TAPE TO AGREE WITH SECTIONS
ADDED GT15C-2 TO B/M

(R) GAEC EO RELEASE: JK 3/10/67 C

MODEL	PROCURING ACTIVITY NO.	GAEC UNIT NO.	SUB CONTR UNIT NO.
LM		LM-1 (3D) & -2 (32)	

DRAWING CHANGE REQD: REVISE DWG ✓ RECORD EO
DISPOSITION OF PARTS: REWORK ✓ SCRAP

	VDI	SUPPORT	RELIAB. GROUP	GROUP LEADER	STRESS GROUP	LIAISON ENGRG	PROJ ENGRG	
APPROVED BY	[illegible]			F.W.R.	[illegible]		Cum	[illegible]
DATE	3/2/67			3/2/67	3/4		3/7/67	3/10/67

PRIORITY: C
DRAWING TITLE: BLANKET INSTL A/S-M/S-EXTERIOR LWR
DRAWING NO.: LDW280-51896
EO NO.: A3

ISSUED BY JOHN K LEE SECTION VDI GROUP NO. 335 PL 35

01 NAS 9-1100

A

ENG 32.1 REV 3-65

GRUMMAN AIRCRAFT ENGINEERING CORP.
CODE IDENT NO. 26512
ENGINEERING ORDER *

DWG NO LDW280-51896 EO NO. A4
CONTROL INFO NO. LM5-13520

REVISE F/D & B/M AS FOLLOWS:

IN F/D & B/M ADD -3 INSTL THE SAME AS -1 EXCEPT AS SHOWN.
NEXT ASSY. LDW280-51150, 1 REQD./MOD., I&T=E

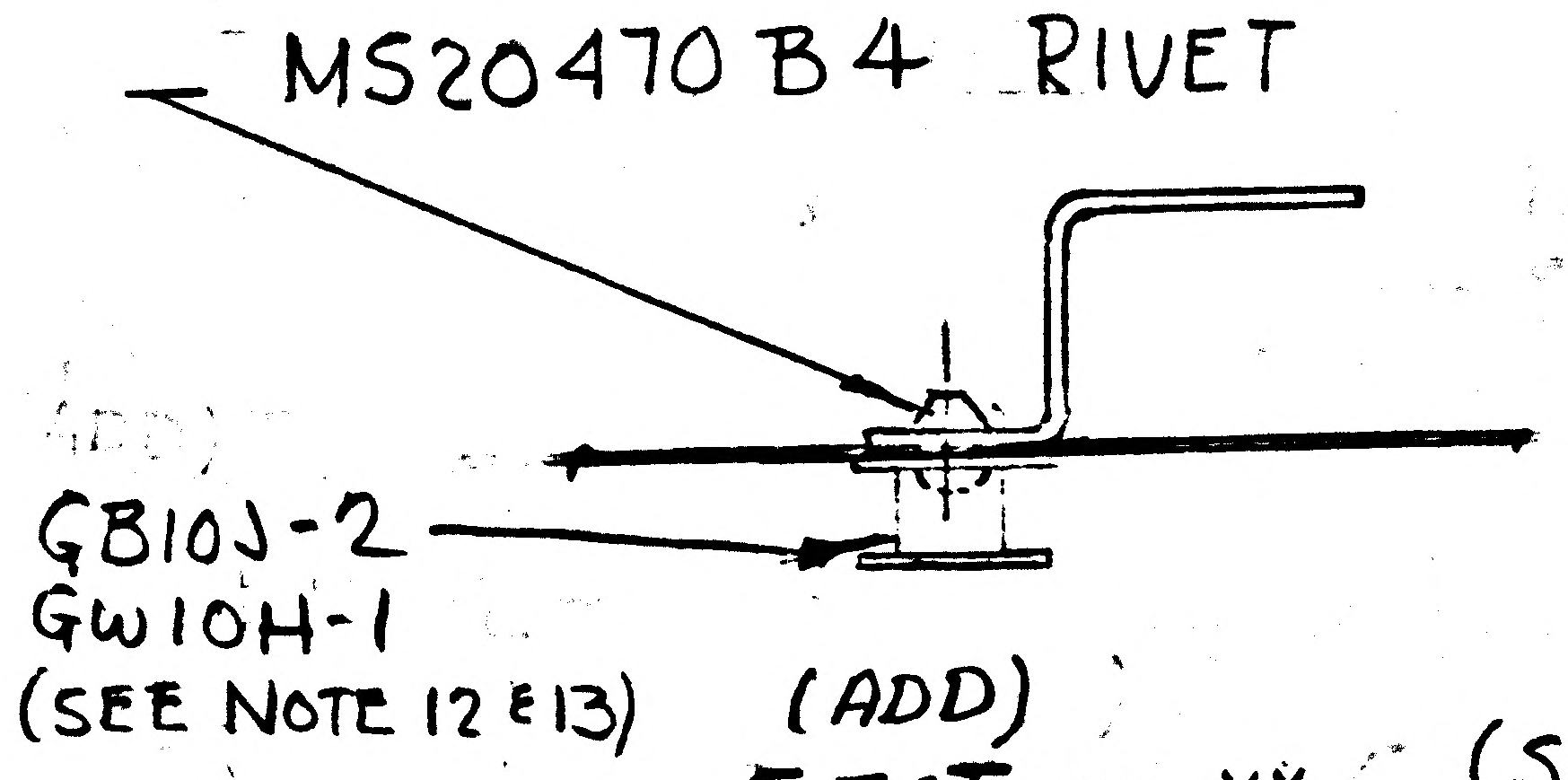

(ADD)
SECT. XX-XX (SECT. H-H ON -1 INSTL)
(TYP 54 PLACES)

XX-XX = NEXT AVAIL. SECT. LETTER

ADD NOTE XX (USE NEXT AVAIL. NO.)

ALL GB10J-1 RETAINERS THAT ARE BONDED PER NOTE 11 ARE TO BE PULL TESTED TO WITHSTAND A LOAD OF 4 LBS. IF BOND FAILS REBOND & RETEST

RELEASED BY LIAISON

REMOVE LM2 REQMTS FROM -1 M/B

DETAIL SPEC REQ		CL II ENGRG CHG	✓	CL I ENGRG CHG	

REASON FOR EO: A BETTER METHOD OF ATTACHING THE BUSHINGS TO THE FITH SHIELD

DESCRIPTION OF EO: ADDED -3, SECT. XX-XX & NOTE XX. FROM -1 MODEL BLOCK, REMOVED LM-2 REQUIREMENTS

GAEC EO RELEASE: JL —

MODEL	PROCURING ACTIVITY NO.	GAEC UNIT NO.	SUB CONTR UNIT NO.
LM		LM2 (32)	

DRAWING CHANGE REQD		DISPOSITION OF PARTS	
REVISE DWG	RECORD EO	REWORK	SCRAP
✓		✓	

APPROVED BY	WT			—		EUB	
DATE	6/16/67			✓ —	6/16/67	6/16/67	6/19/67
	VDI	SUPPORT	RELIAB. GROUP	GROUP LEADER	STRESS GROUP	LIAISON ENGRG	PROJ ENGRG

PRIORITY	DRAWING TITLE	DRAWING NO.	EO NO.
C	BLANKET INSTL. LOWER MID. SECT ASCENT STAGE	LDW280-51896	A4

ISSUED BY P. KEISER X86609 SECTION VDI GROUP NO. 335 PL 5

01 NAS 9-1100

GRUMMAN AIRCRAFT ENGINEERING CORP.
CODE IDENT NO. 26512
ENGINEERING ORDER

ENG 32.1 REV 3-65 B

DWG. NO. LDW280-51896 EO NO. A5
CONTROL INFO NO. LMS-13552

THIS IS A REVISION OF A4

REVISED F/D & B/M AS FOLLOWS:

LDW280-51896-49 INSTL. WAS LDW280-51896-3 INSTL)

RELEASED BY LIAISON

DETAIL SPEC REQ		CL II ENGRG CHG	X	CL I ENGRG CHG	

REASON FOR EO: TO CORRECT INSTL. NO

DESCRIPTION OF EO: REF. EO A4 -49 INSTL. WAS -3 INSTL.

GAEC EO RELEASE: JK

MODEL	EFFECTIVITY: PROCURING ACTIVITY NO.	GAEC UNIT NO.	SUB CONTR UNIT NO.
LM		LM 2(32)	

DRAWING CHANGE REQD: REVISE DWG	RECORD EO	DISPOSITION OF PARTS: REWORK	SCRAP
✓		✓	

	VD1	SUPPORT	RELIAB. GROUP	GROUP LEADER	STRESS GROUP	LIAISON ENGRG	PROJ ENGRG	~~GOVT~~
APPROVED BY	WT			✓		CH	WKB	
DATE	6/22/67				6/21/67	6-24-67	8/4/67	6/27/67

PRIORITY	DRAWING TITLE	DRAWING NO.	EO NO.
C	BLANKET INSTL LOWER MID SECT. A15	LDW280-51896.	A5

ISSUED BY P. KEISER X4709 SECTION VD1. GROUP NO. 335 PL 5

01

NAS 9-1100

GRUMMAN AIRCRAFT ENGINEERING CORP.
CODE IDENT NO. 26512
ENGINEERING ORDER

DWG. NO. LDW280-51896 | EO NO. A6
CONTROL INFO NO. LM83-2137

ENG 32.2 REV 3-65

(ADD) NOTE ✱.

UPON FINAL BLANKET INSTALLATION TAPE ALL 5 MILL H-FILM BLANKET SEAMS AS SHOWN ON DETAIL✱✱

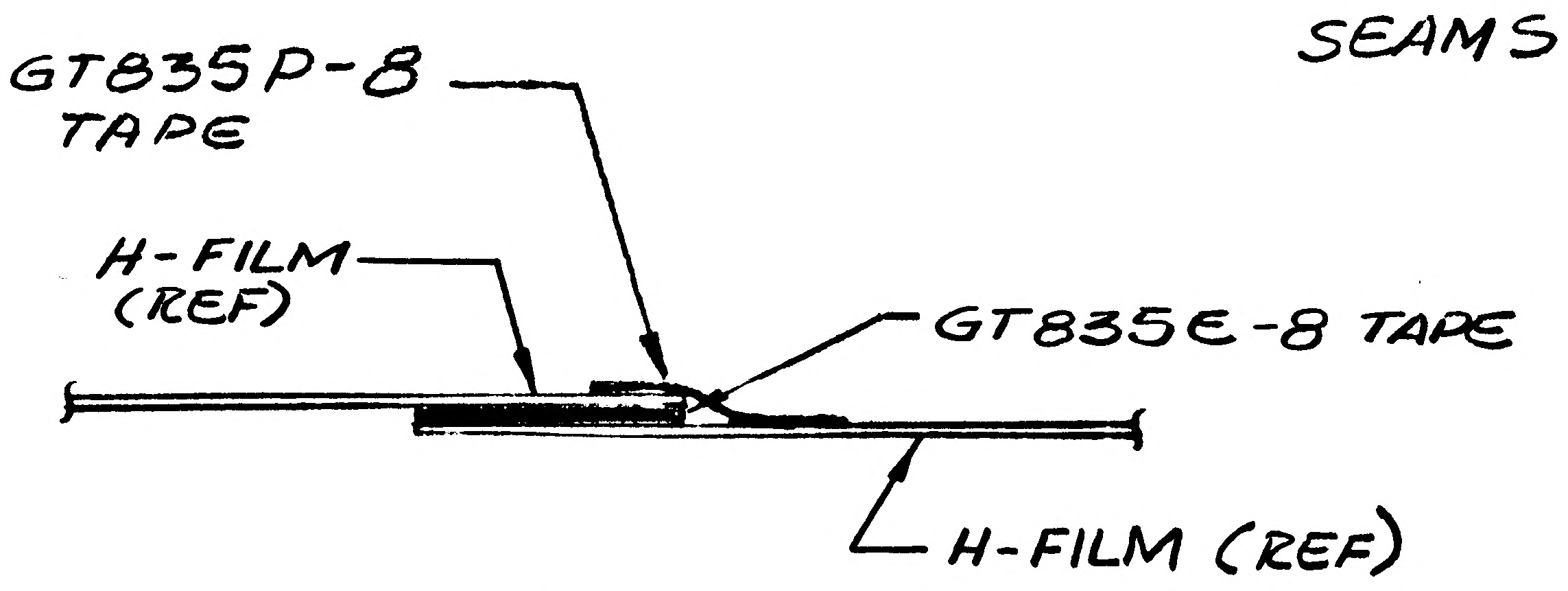
GT835P-8 TAPE
H-FILM (REF)
GT835E-8 TAPE
H-FILM (REF)

TYPE I SEAM

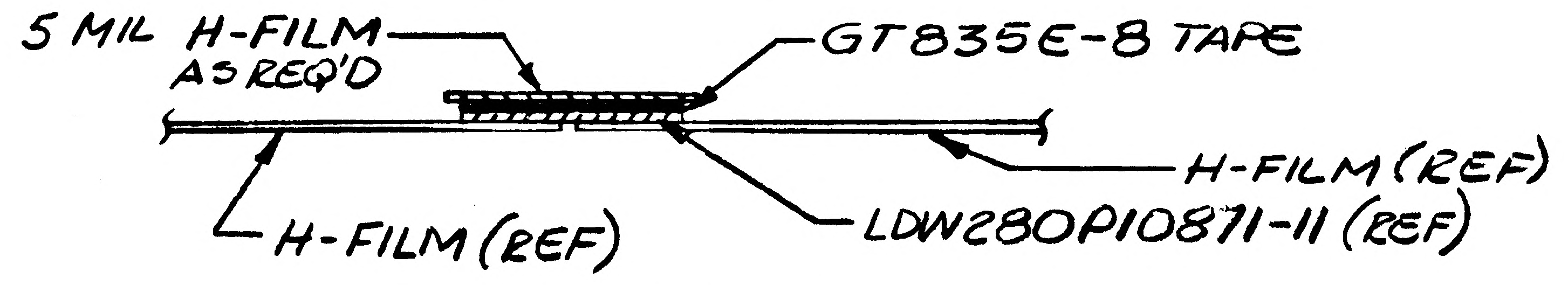
5 MIL H-FILM AS REQ'D
GT835E-8 TAPE
H-FILM (REF)
H-FILM (REF)
LDW280P10871-11 (REF)

TYPE II SEAM

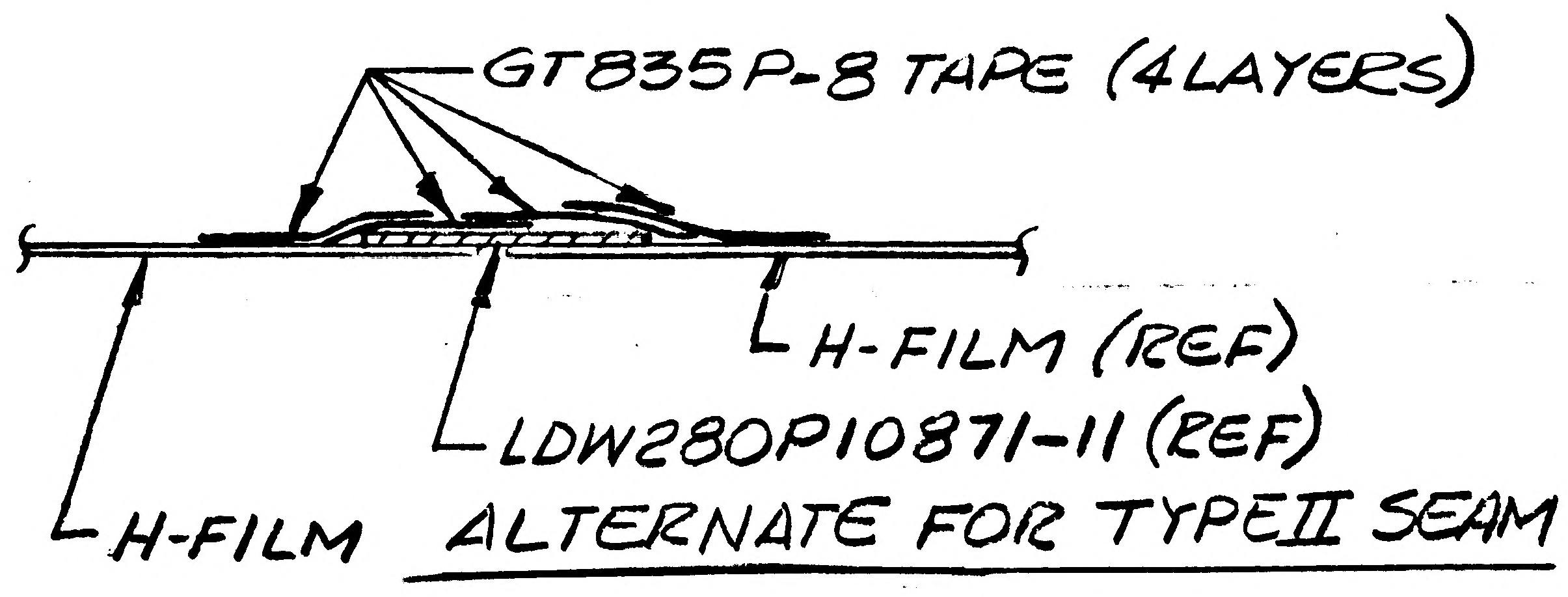
GT835P-8 TAPE (4 LAYERS)
H-FILM (REF)
LDW280P10871-11 (REF)
H-FILM

ALTERNATE FOR TYPE II SEAM

DETAIL ✱✱ (ADD)
(SEE NOTE✱)

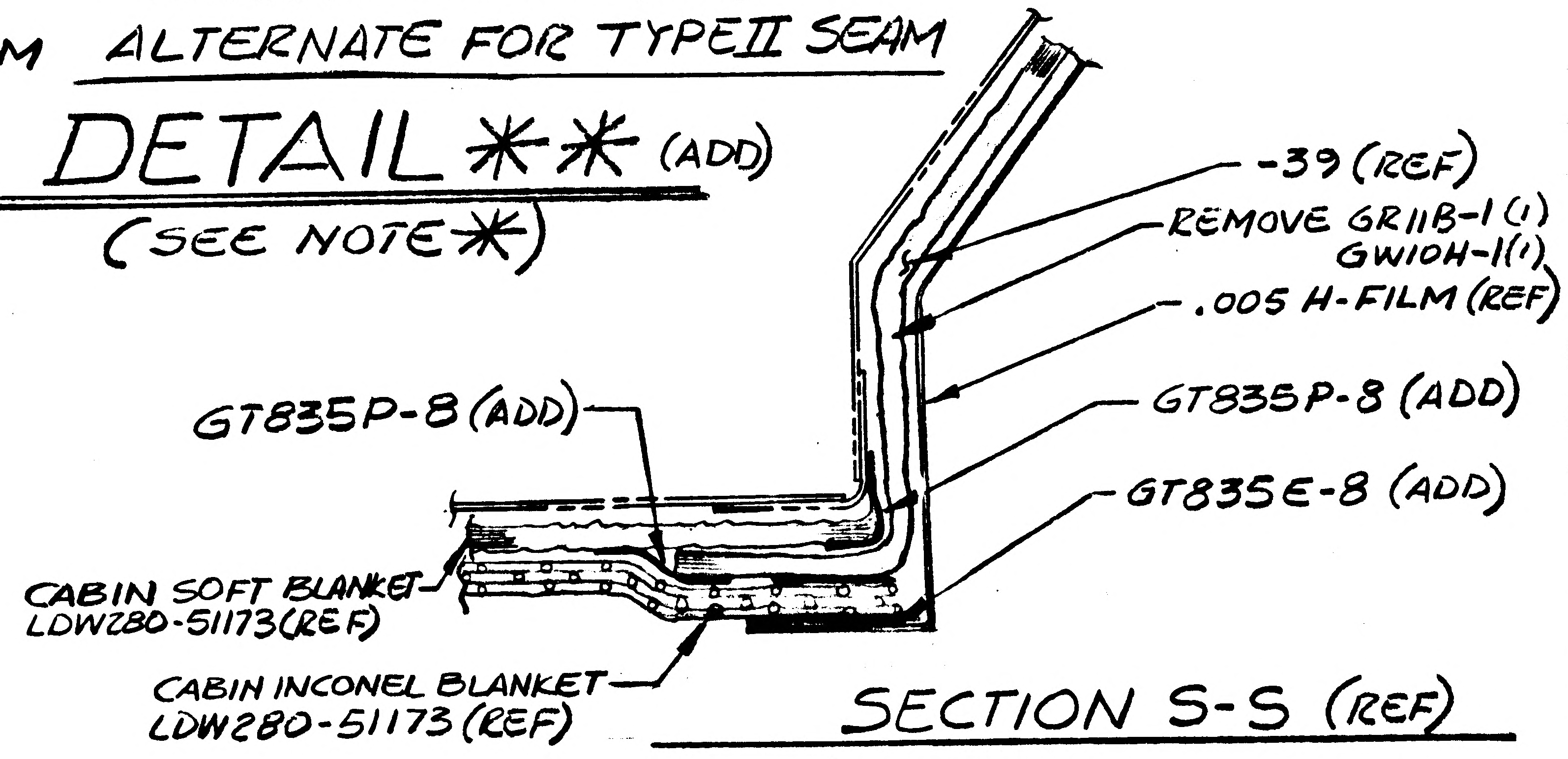
-39 (REF)
REMOVE GR11B-1(1) GW10H-1(1)
.005 H-FILM (REF)
GT835P-8 (ADD)
GT835E-8 (ADD)
GT835P-8 (ADD)
CABIN SOFT BLANKET LDW280-51173(REF)
CABIN INCONEL BLANKET LDW280-51173 (REF)

SECTION S-S (REF)

FOR ✱ USE NEXT AVAILABLE NOTE NUMBER
FOR ✱✱ USE NEXT AVAILABLE DETAIL LETTER

DETAIL SPEC REQ ☐ | CL II ENGRG CHG ☐ | CL I ENGRG CHG ☑ | LCD # 2303 | 83

REASON FOR EO: TO PREVENT LDW280P10871-11 ADHESIVE DETERIORATION IN HIGH TEMPERATURE F.I.T.H. AREA.

DESCRIPTION OF EO: ON-1 INSTL. ADDED NOTE✱ AND DETAIL✱✱, ON SECT. S-S REVISED SEAM, ADDED GT835E-8, GT835P-8, REMOVED GR11B-1(1), GW10H-1(1)

GAEC EO RELEASE: JK 11/8

MODEL	PROCURING ACTIVITY NO.	GAEC UNIT NO.	SUB CONTR UNIT NO.
LM		LM-1 (31)	

DRAWING CHANGE REQD: REVISE DWG ✓ | RECORD EO
DISPOSITION OF PARTS: REWORK ✓ | SCRAP

APPROVED BY	Plunkett						Plunkett	
DATE	26 Oct	11/4/67		10/26	11/4/67		26 Oct.	10-27
	SYS.	~~SUPPORT~~ VDI	RELIAB. GROUP	GROUP LEADER	STRESS GROUP	LIAISON ENGRG	PROJ ENGRG	~~GOVT~~

PRIORITY: C
DRAWING TITLE: BLANKET INSTL. & ASS'Y - A/S MID SECTION - EXTERIOR - LOWER
DRAWING NO.: LDW280-51896
EO NO.: A6

ISSUED BY CARLOS PAEZ X2818 SECTION V.D.1 GROUP NO. 812 PL 83

01 NAS 9-1100

B

ENG 32.1 REV 3-65

GRUMMAN AIRCRAFT ENGINEERING CORP.
CODE IDENT NO. 26512
ENGINEERING ORDER *

DWG. NO. LDW280-51896	EO NO. A7
CONTROL INFO NO. LDW280B0382	

ON -49 INSTL, IN F/D & B/M REPLACE LDW280P10871-11 TAPE WITH LDW280P10871-1 TAPE ASSY.

CREATE -51 ASSY (IDENTICAL TO -3 ASSY EXCEPT LDW280P10871-11 TAPE IS REMOVED).

ON -49 INSTL REPLACE -3 ASSY WITH -51 ASSY.

DETAIL SPEC REQ		CL II ENGRG CHG		CL I ENGRG CHG	✓ LCD 2303

① (5)

REASON FOR EO	DESCRIPTION OF EO	GAEC EO RELEASE
REMOVAL OF LOW TEMP "H" FILM TAPE	ON -49 INSTL REPLACED -3 ASSY WITH -51 ASSY & LDW280P10871-11 TAPE WITH LDW280P10871-1 TAPE ASSY	JK 11/20/7

MODEL	~~PROGRAMME~~	GAEC UNIT NO.	SUB CONTR UNIT NO.
LM		LM-2 (32)	

EFFECTIVITY

DRAWING CHANGE REQD		DISPOSITION OF PARTS	
✓		✓	
REVISE DWG	RECORD EO	REWORK	SCRAP

APPROVED BY				FDR	OR			
DATE	11/17/67	11/17/67		1-17-67	11/17/67		11/17/67	11-20-67
0	VDI	~~[illegible]~~ THERM	RELIAB. GROUP	GROUP LEADER	STRESS GROUP	LIAISON ENGRG	PROJ ENGRG	~~[illegible]~~

PRIORITY	DRAWING TITLE	DRAWING NO.	EO NO.
C	BLANKET INSTL ~ A/S ~ M/S EXTERIOR LOWER	LDW280-51896	A7

11/28/67
ISSUED BY ART WILSON X7033 11/16/67 SECTION VDI GROUP NO. 335 PL 25

01 NAS 9-1100

ENG 32.1 REV 3-65

GRUMMAN AIRCRAFT ENGINEERING CORP.
CODE IDENT NO. 26512

ENGINEERING ORDER

DWG. NO.	LDW280-51896	EO NO.	A8
CONTROL INFO NO.	LDW280 B-0940		

ON-1 & -49 INSTL.
ADD NOTE ☒ : CRACKS, WRINKLES & PIN HOLES IN EXCESS OF LIMITS SPECIFIED ON LPC280-5 ARE ACCEPTABLE

ADD NOTE ✱ : OVERLAP INCONEL STRIP 1" MIN. AT EVERY STRAIGHT JOINT & 2 1/2" MIN. AT EVERY CORNER JOINT (ON UNDERSIDE ONLY)

LFM

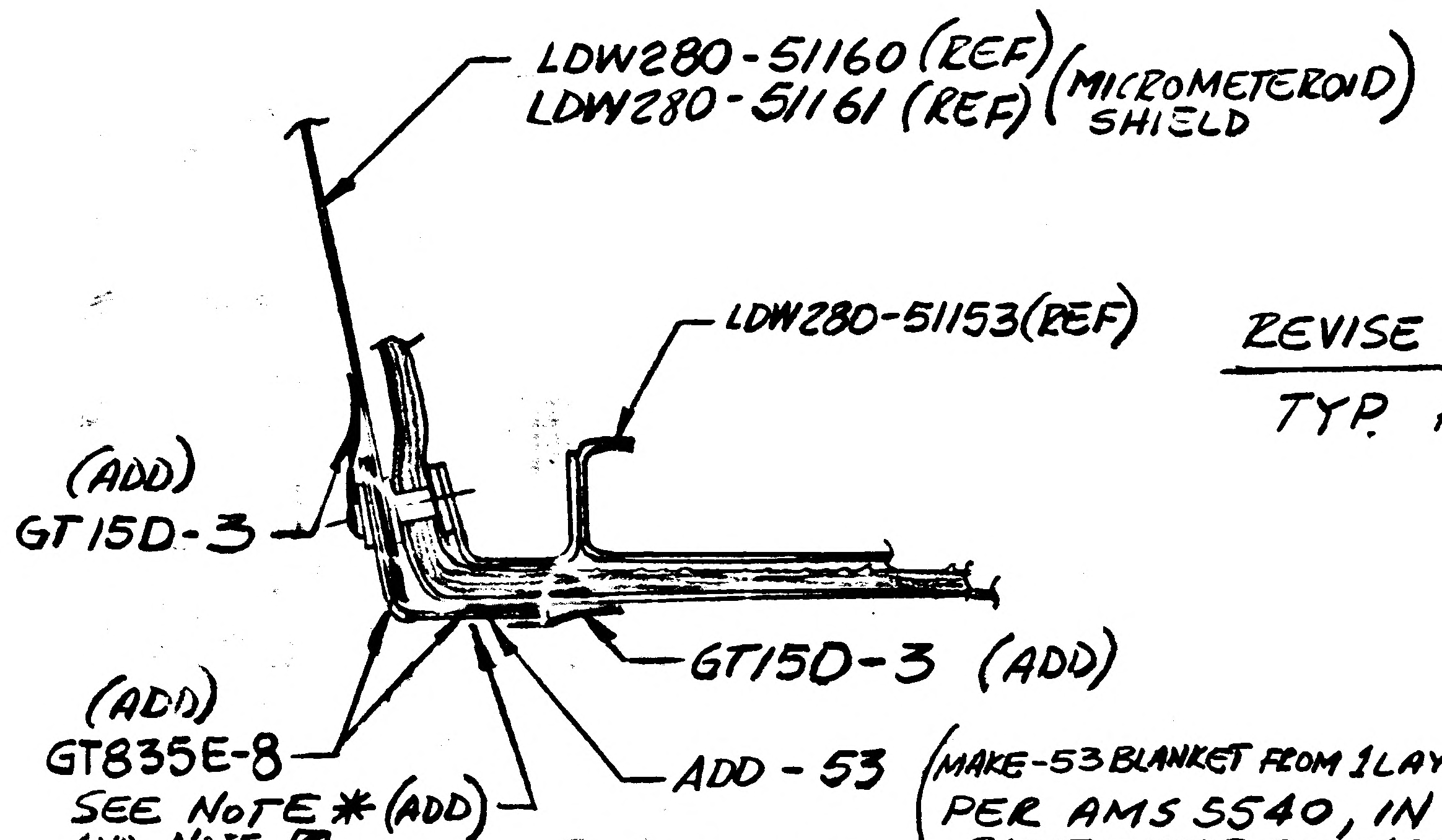

REVISE SECTIONS AS SHOWN AROUND TUB PERIFERY

TYP FOR SECT. A-A
SECT. B-B
SECT. C-C
SECT. D-D
SECT. E-E

(MAKE -53 BLANKET FROM 1 LAYER OF .00125 INCONEL 600 FOIL PER AMS 5540, IN 5 IN. WIDTHS, LENGTHS AS REQ'D APPROX. 60 FT TOTAL PAINT OUTER SURFACE WITH BLACK PYROMARK PER LPC280-5

☒, ✱ USE NEXT AVAILABLE NOTE NUMBERS

DETAIL SPEC REQ		CL II ENGRG CHG		CL I ENGRG CHG	✓	LCD # 2501

REASON FOR EO	DESCRIPTION OF EO
TO PREVENT MICROMETEROID SHIELD FROM BLOWING OUT DURING F.I.T.H.	ON-1 AND -49 INSTL. REVISED SECT. A-A, B-B, C-C, D-D, E-E AND L-L, ADDED -53, GT15D-3 AND GT835E-8 TAPE, ADDED NOTE ✱ & ☒

GAEC EO RELEASE: 12/27/67 for KSC

MODEL	EFFECTIVITY ~~[illegible]~~ EI	GAEC UNIT NO.	SUB CONTR UNIT NO.
LM	LFM#95	LM-1 (31)	
LM		LM-2 (32)	

DRAWING CHANGE REQD: REVISE DWG	RECORD EO	DISPOSITION OF PARTS: REWORK	SCRAP
✓		✓	

APPROVED BY		MU					
DATE	12/26/67	12/27/67		12-27-67	12/27/67		12/27/67
—	V.D.I.	THERMO.	RELIAB. GROUP	GROUP LEADER	STRESS GROUP	LIAISON ENGRG	PROJ ENGRG

PRIORITY	DRAWING TITLE	DRAWING NO.	EO NO.
C	BLANKET INSTL. A/S - M/S EXTERIOR LWR	LDW280-51896	A8

ISSUED BY C. A. PAEZ X7033 SECTION V.D.I. GROUP NO. 335 PL 25

01

NAS 9-1100

LDW280-51900 A

MODEL OR END ITEM	NEXT ASSY	MODULE OR SER NO.	REQD PER MODULE OR END ITEM
PART NO.		GAEC SCH NO.	

MODEL OR END ITEM	NEXT ASSY	MODULE OR SER NO.	REQD PER MODULE OR END ITEM
PART NO.		GAEC SCH NO.	

MODEL OR END ITEM	NEXT ASSY	MODULE OR SER NO.	REQD PER MODULE OR END ITEM
LEM	LDW280-51509	LEM-1(31)	1
PART NO. LDW280-51900-1		GAEC SCH NO. 50-2	

5

SH REV STATUS: FOR DESCRIPTION OF REV SEE SUBQ SH

SHEET	1.00	1.10	2.00	3.00						
REV	A	A	A	A						
SHEET										
REV										
SHEET										
REV										

LAST SECT LTR USED		GRUMMAN REL INFO			
		PRIM NO.	VE(001)		
LAST DASH NO. USED	-1	232	MD-A	8.5.6	

UNLESS OTHERWISE SPECIFIED DIMENSIONS ARE IN INCHES.
TOLERANCE UNLESS SPECIFIED
FRACTIONS - DECIMALS – ANGLES
±1/64 ±.010 ±1/2°

ORIG DWG AUTH

DETAIL SPEC REQUIREMENT	
CLASS II ENGRG CHANGE	
CLASS I ENGRG CHANGE	

CONTRACT NO. NAS 9-1100
LINE ITEM I
DOCUMENTATION TYPE II

DRAWN BY	MELMED 7-13-66	RELIABILITY	
LAYOUT BY	W.TRAUT		
CHECKED BY	EG 7-19-66		
GR LEADER	J. Pusateri 8/3/66		
VEH DES INT	W.R. BISCHOFF		
STRUCTURES	JV 8/4	PROJ ENGR	R.M. Carbee (W) 8-17
STRUCTURES	Wildermann 8/4	REL GROUP	Botti 8-22-66
WEIGHTS	8-18		

GRUMMAN AIRCRAFT ENGRG CORP
BETHPAGE, L. I., NEW YORK

TANK INSTALLATION
DESCENT STAGE-PROPELLENT TANK +X 131.14

SIZE	CODE IDENT NO.		
B	26512	LDW280-51900	A
SCALE	NONE	SHEET 1.00 OF 4	

ENG 77.1 12-65

01

NAS 9-1100

REVISIONS FOR CONTINUATION OF REVISIONS SEE SHEET ______

CHANGE LTR	ITEM NO.	SHEET NO.	ZONE	GRUMMAN INFO ONLY	DET SPEC	CLASS I	CLASS II	ENGRG ORDER	DESCRIPTION	EFFECTIVITY	DISPOSITION OF EXISTING PARTS		CHANGED BY AND DATE	ENGRG APPD	GOVT APPD
											REWORK	SCRAP			
A	1	1,1.10,2,3						EO A1	EO A1 - INITIAL DWG RELEASE PARTS MADE PER EO	LEM-1	NOT	REQD	E.G		
	2	1,1.10,2,3						EO A2	ON-1 INSTL ADDED LDW280-25905-1 & REVISED N/A WAS LDW280-51510		✓		MELMED 7-13-66	JV	
	3	1 & 3						EO A3	REMOVED LDW280-25905-1(1) ADDED LDW280-25905-3(1)		✓				
	4	1,2 & 3						EO A4	IN FIELD FOR-1 ADDED "SHIM AS REQD .020 MAX SEE NOTE 2 & ADDED NOTE 2		✓			RMC	

CHG APPROVED

LTR	GROUP LDR	VEH DES INT	STRUCTURES	STRUCTURES	WEIGHTS						
A	—	J. [illegible] 8/3									

GRUMMAN AIRCRAFT ENGRG CORP., BETHPAGE, L. I., NEW YORK

SIZE	CODE IDENT NO.		
B	26512	LDW280-51900	A
SCALE NONE		SHEET 1.10	

ENG 77.16 3-66

01

NAS 9-1100

QTY PER ASSEMBLY						CODE IDENT	PART NO.	I&T	NOMENCLATURE OR DESCRIPTION	MATERIAL	GOVT SPEC	COML SPEC	STOCK SIZE	PROCESS SYM	FINISH NO.	ZONE
					-1											
							SEE NOTE 2	E	SHIM							
					16		NAS1306-10		BOLT	STD PART						
					16		NAS1305-7		BOLT							
					16		MS21042L6		NUT							
					16		MS21042L5		NUT							
					16		AN960C516L		WASHER							
					16		AN960C515L		WASHER	STD PART						
					1		LSC-280-4-57		TANK ASSY	SEE NOTE 1						4B
					1		LSC-280-4-55									5A
					1		LSC-280-4-53									7B
					1		LSC-280-4-51		TANK ASSY	SEE NOTE 1						5D
					1		LDW280-259053		DIFFUSER INSTL	SEE DWG						3A
							LDW280-51900-1	E	TANK INSTL					NONE	NONE	

SYM OR NO.	PROCESS OR FINISH	GRUMMAN SPEC OR MILITARY SPEC	SYM OR NO.	PROCESS OR FINISH	GRUMMAN SPEC OR MILITARY SPEC	SYM OR NO.	PROCESS OR FINISH	GRUMMAN SPEC OR MILITARY SPEC
						88	ANODIZE	LSP14-9030

I & T: IDENTIFICATION AND TRACEABILITY IN ACCORDANCE WITH : NONE

GRUMMAN AIRCRAFT ENGRG CORP, BETHPAGE, L. I., NEW YORK

SIZE	CODE IDENT NO.		
B	26512	LDW280-51900	A

SCALE NONE

SHEET 2.00

ENG 77.2 7-66

01

NAS 9-1100

01/03 NAS 9-1100

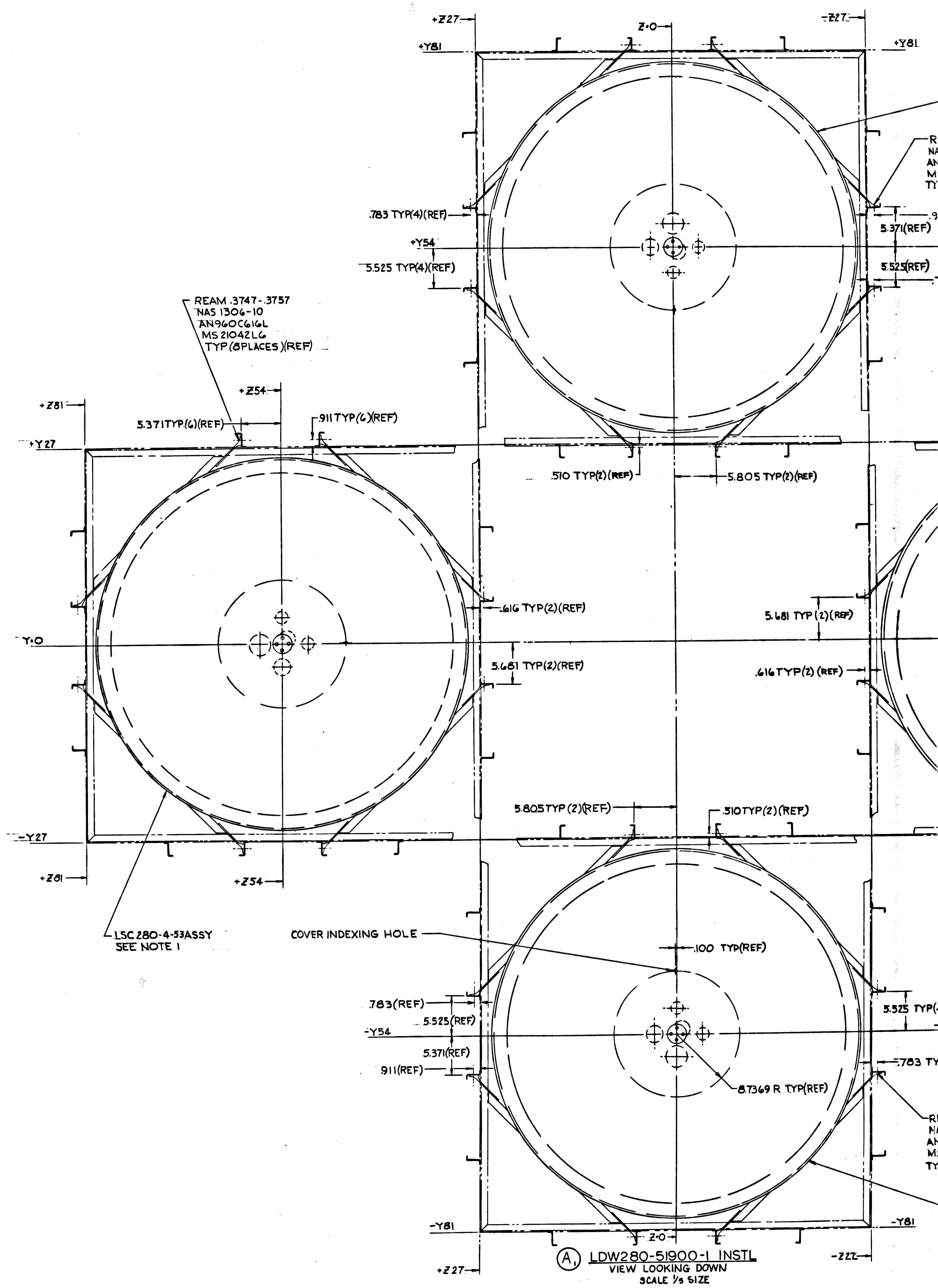

+Z27
+Y81
Z-0
-Z27
+Y81
.783 TYP(4)(REF)
+Y54
5.525 TYP(4)(REF)
5.371(REF)
5.525(REF)
REAM .3747-.3757
NAS 1306-10
AN960C616L
MS 21042L6
TYP(8PLACES)(REF)
+Z54
+Z81
5.371 TYP(6)(REF)
.911 TYP(6)(REF)
+Y27
.510 TYP(2)(REF)
5.805 TYP(2)(REF)
.616 TYP(2)(REF)
Y-0
5.681 TYP(2)(REF)
5.681 TYP(2)(REF)
.616 TYP(2)(REF)
5.805 TYP(2)(REF)
.510 TYP(2)(REF)
-Y27
+Z81
+Z54
LSC 280-4-53ASSY
SEE NOTE 1
COVER INDEXING HOLE
.100 TYP(REF)
.783(REF)
5.525(REF)
-Y54
5.371(REF)
.911(REF)
8.7369 R TYP(REF)
-Y81
Z-0
-Y81
+Z27
-Z27

Ⓐ LDW280-51900-1 INSTL
VIEW LOOKING DOWN
SCALE 1/5 SIZE

CODE IDENT NO. 26512	SHEET
LDW 280-51900	3

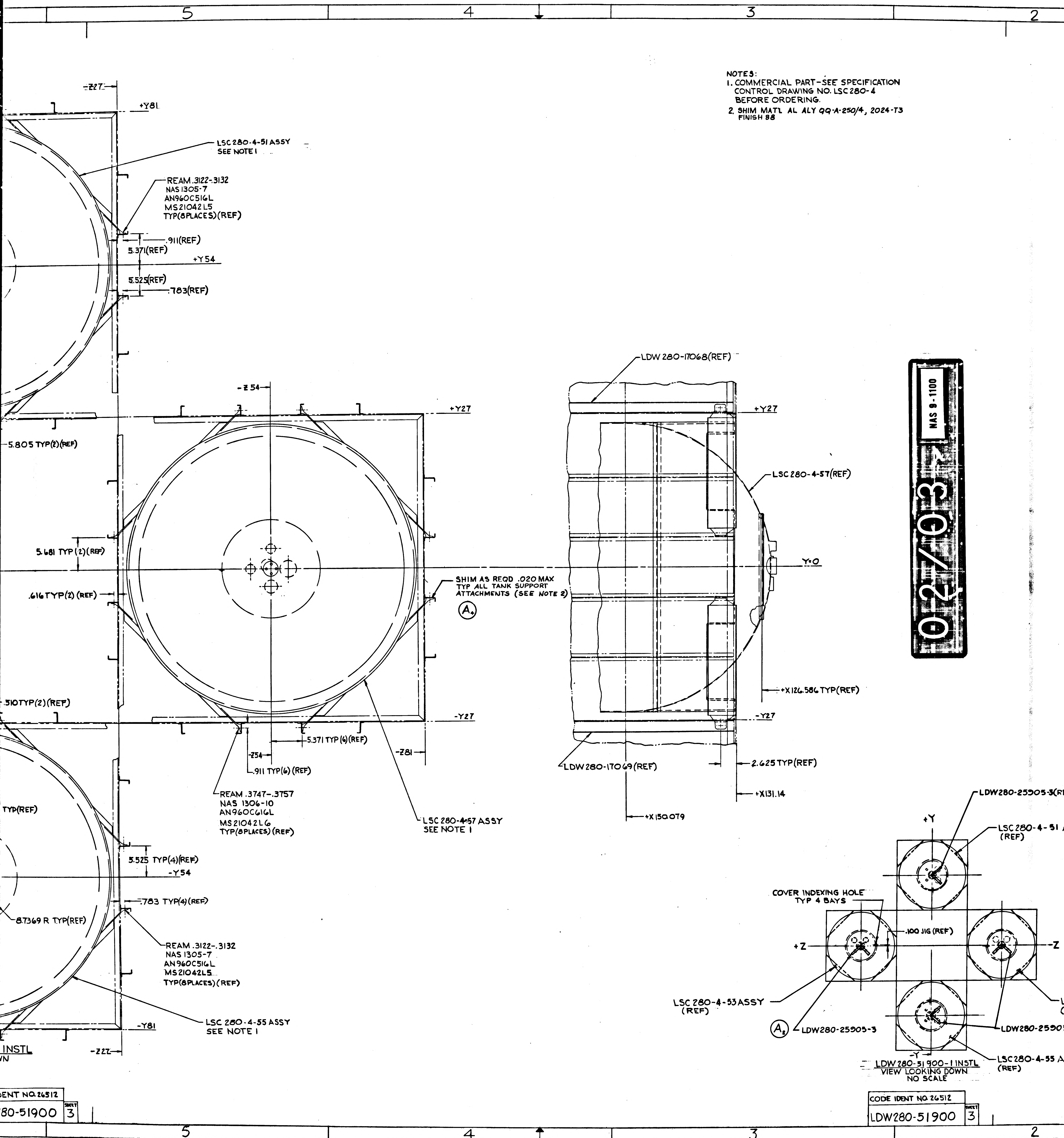

5
4
3
2
-Z27
+Y81
LSC 280-4-51 ASSY SEE NOTE 1
REAM .3122-.3132 NAS 1305-7 AN960C516L MS21042L5 TYP(8PLACES)(REF)
.911(REF)
5.371(REF)
+Y54
5.525(REF)
.783(REF)
-Z54
+Y27
5.805 TYP(2)(REF)
5.681 TYP (2)(REF)
.616 TYP(2) (REF)
SHIM AS REQD .020 MAX TYP ALL TANK SUPPORT ATTACHMENTS (SEE NOTE 2)
A4
.510 TYP(2)(REF)
-Y27
-Z54
5.371 TYP (6)(REF)
-Z81
.911 TYP(6) (REF)
REAM .3747-.3757 NAS 1306-10 AN960C616L MS21042L6 TYP(8PLACES) (REF)
LSC 280-4-57 ASSY SEE NOTE 1
TYP(REF)
5.525 TYP(4)(REF)
-Y54
.783 TYP(4)(REF)
8.7369 R TYP(REF)
REAM .3122-.3132 NAS 1305-7 AN960C516L MS21042L5 TYP(8PLACES) (REF)
-Y81
LSC 280-4-55 ASSY SEE NOTE 1
-Z27
INSTL
LDW 280-17068(REF)
+Y27
LSC 280-4-57(REF)
Y-0
+X126.586 TYP(REF)
-Y27
LDW 280-17069(REF)
2.625 TYP(REF)
+X131.14
+X150.079
LDW280-25905-3(REF)
+Y
LSC 280-4-51
(REF)
COVER INDEXING HOLE TYP 4 BAYS
.100 JIG (REF)
+Z
-Z
LSC 280-4-53 ASSY (REF)
A2
LDW280-25905-3
LDW280-2590
-Y
LSC280-4-55 A
(REF)
LDW 280-51900-1 INSTL VIEW LOOKING DOWN NO SCALE

NOTES:
1. COMMERCIAL PART–SEE SPECIFICATION CONTROL DRAWING NO. LSC280-4 BEFORE ORDERING.
2. SHIM MAT'L AL ALY QQ-A-250/4, 2024-T3 FINISH 88

02/03 NAS 9-1100

ENT NO. 26512
80-51900 SHEET 3

CODE IDENT NO 26512
LDW280-51900 SHEET 3

NOTES:
1. COMMERCIAL PART–SEE SPECIFICATION CONTROL DRAWING NO. LSC 280-4 BEFORE ORDERING.
2. SHIM MAT'L AL ALY QQ-A-250/4, 2024-T3 FINISH 88

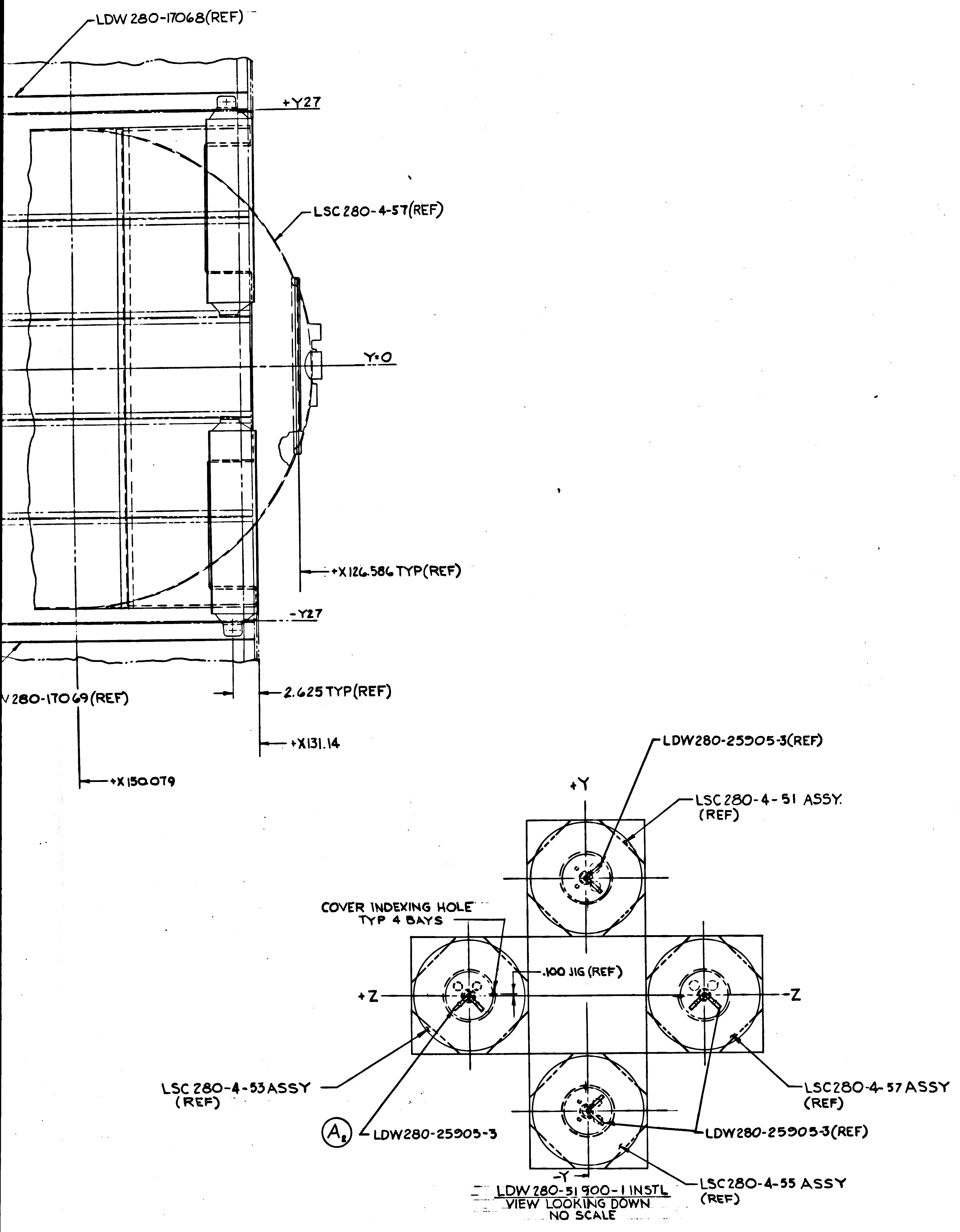
LDW 280-17068(REF)
+Y27
LSC 280-4-57(REF)
Y-0
+X126.586 TYP(REF)
-Y27
V280-17069(REF)
2.625 TYP(REF)
+X131.14
+X150.079
LDW280-25905-3(REF)
+Y
LSC280-4-51 ASSY. (REF)
COVER INDEXING HOLE TYP 4 BAYS
.100 JIG (REF)
+Z
-Z
LSC 280-4-53ASSY (REF)
LSC280-4-57ASSY (REF)
A8
LDW280-25905-3
LDW280-25905-3(REF)
-Y
LSC280-4-55 ASSY (REF)

LDW 280-51900-1 INSTL
VIEW LOOKING DOWN
NO SCALE

CODE IDENT NO. 26512	
LDW280-51900	SHEET 3

03/03 NAS 9-1100

MANUFACTURING OPERATIONS
UNLESS OTHERWISE SPECIFIED
NOTES CHECKED √ APPLY TO THIS DWG.

PART NUMBER AND ALL OTHER MARKINGS IN REGION MARKED ▭ USE BOTH SIDES IF NECESSARY.	
FILLET AND INSIDE CORNER RADII TOLERANCES .016R TO .062R ± .010 .063R TO .250R ± .015 OVER .250R ± .030	
DEPTH SHOWN FOR TAPPED HOLES IS FULL THDS. 2-3 IMP THDS. BEYOND PERMISSIBLE.	
EXTERNAL THREAD LENGTH SHOWN INCLUDES 2 IMPERFECT THREADS MAX.	
DO NOT CADMIUM PLATE & PAINT HOLES OR SURFACES MARKED WITH DOUBLE ASTERISK.	
MISMATCH STEP OF ± .005 PERMISSIBLE DUE TO CHANGE OF CUTTERS AT INSIDE INTERSECTING SURFACES.	
DIAMETERS MARKED MUST BE CONCENTRIC WITHIN FULL INDICATOR READING	
HOLES MUST BE KEPT FREE OF CHROME PLATING SOLUTION.	
ALL DIMENSIONS SHOWN TO BE MET AFTER CADMIUM PLATING. THICKNESS OF PLATE .0003 MIN. TO .0005 MAX. MIN. THICKNESS TO BE .0002 ON THREADED AREAS. NO ALLOWANCE FOR PLATING IN HOLES	
125 √ SURFACE ROUGHNESS INCLUDING REAMED HOLES PER MIL-STD-10	
200 √ FOR ALL DRILLED HOLES	
REMOVE ALL BURRS. BREAK ALL EDGES .015-.031	
INSPECTION INFORMATION MINIMUM PERMISSIBLE AVERAGE EDGE DISTANCE MARKED IS	
SYMBOL √ DENOTES SURFACE TO BE MACHINED	
UNLESS OTHERWISE SPECIFIED TOLERANCE ON FLANGES IS ± 1/32	
LENGTHS OF AN, NAS & MS AL ALY RIVETS SHORTER THAN 1 INCH ARE NOT SPECIFIED.	
TOLERANCE ON LOFTED DELINEATIONS IS	

DWG SIZE 40 X 82

PRINTING INFO ONLY
FULL SIZE SHEET AREA (42 X 84)= 24.5 SQ. FT.
1/2 SIZE SHEET AREA (1/4 OF FULL)= 6.1 SQ. FT.
PRINT TRIM LINE

LDW280-51900 A
LDW280-51900 A

	GRUMMAN AIRCRAFT ENGRG CORP., BETHPAGE, L. I., NEW YORK			
	SIZE K	CODE IDENT NO. 26512	LDW280-51900	A
LEM MODEL OR END ITEM	SCALE NOTED		SHEET 3	

ENG 32.1 REV 3-65

GRUMMAN AIRCRAFT ENGINEERING CORP.
CODE IDENT NO. 26512
ENGINEERING ORDER

DWG. NO. LDW280-51900 EO NO. B1
CONTROL INFO NO. LDW280-8995

ON LDW280-51900-1

REMOVE LDW280-25905-3 (1) & REPLACE WITH
LDW280-25905-5 (1).

5

DETAIL SPEC REQ	☐	CL II ENGRG CHG	☐	CL I ENGRG CHG	☐

REASON FOR EO
LDW280-25905-5 HAS EXTENDED TUBES TO ALLOW USE OF SAME HELIUM PRES. LINES AS ON LTA-3, LEM-2 TO -6

DESCRIPTION OF EO
ON-1, REMOVED LDW280-25905-3
ADDED LDW280-25905-5

GAEC EO RELEASE: LE 8-16

MODEL	EFFECTIVITY PROCURING ACTIVITY NO.	GAEC UNIT NO.	SUB CONTR UNIT NO.
LEM		LEM-1 (31)	

DRAWING CHANGE REQD		DISPOSITION OF PARTS	
✓		✓	
REVISE DWG	RECORD EO	REWORK	SCRAP

APPROVED BY					JV		RMC EU	B.H.
DATE	7/26/66	8-6			8/1		8-8	8-1-66
7-26-66	VD.I.	~~SUPPORT~~	RELIAB. GROUP	GROUP LEADER	STRESS GROUP	LIAISON ENGRG	PROJ ENGRG	

PRIORITY	DRAWING TITLE	DRAWING NO.	EO NO.
C	TANK INST. D/S - PROP. TANK - X 131.14	LDW280-51900	B1

ISSUED BY S.M. KRAMEISEN X7033 SECTION VEH. DES. INT. GROUP NO. 335 PL 35

ING 32.2 REV 3-65

GRUMMAN AIRCRAFT ENGINEERING CORP.
CODE IDENT NO. 26512
ENGINEERING ORDER

DWG. NO. LDW280-51900
EO NO. B2
CONTROL INFO NO. LDW280A 4620

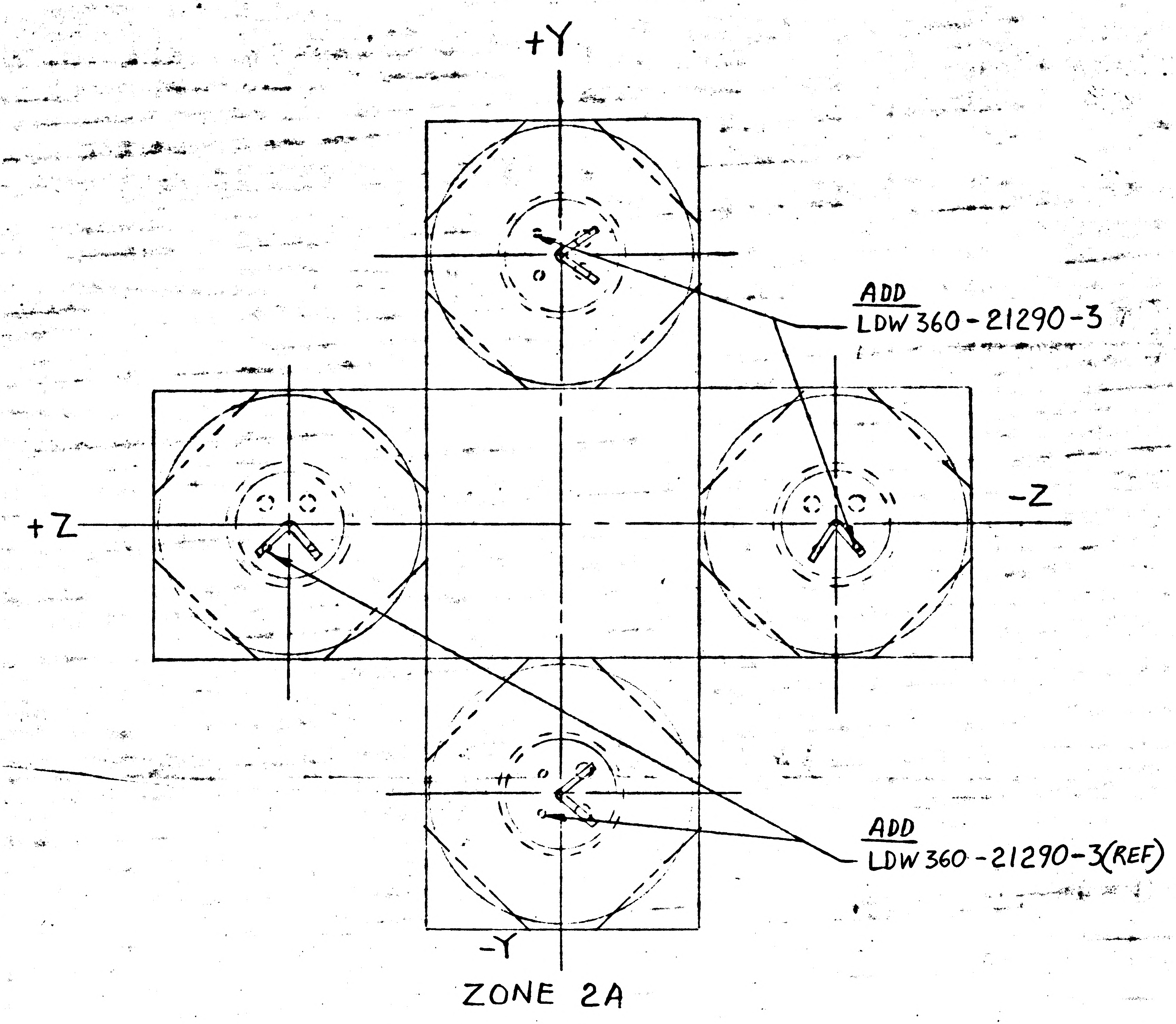

ON-1 ADD LDW360-21290-3 TRANSDUCER INSTL. 1 REQD

NOTE: THIS INSTL IS ACCOMPLISHED.

2

DETAIL SPEC REQ ☐ CL III ENGRG CHG ☐ CL II ENGRG CHG ☐

REASON FOR EO	DESCRIPTION OF EO	GAEC EO RELEASE
TO INSTALL PARTS ON THEIR NEXT ASSEMBLY	ADDED LDW360-21290-3 FOR-1	② C VE 1/5/67

MODEL	PROCURING ACTIVITY NO.	GAEC UNIT NO.	SUB CONTR UNIT NO.
LM		LM-1(31)	

DRAWING CHANGE REQD: REVISE DWG	DRAWING CHANGE REQD: RECORD EO	DISPOSITION OF PARTS: REWORK	DISPOSITION OF PARTS: SCRAP
✓		✓	

			SUPPORT	RELIAB. GROUP	GROUP LEADER	STRESS GROUP	LIAISON ENGRG	PROJ ENGRG	~~CONE~~
APPROVED BY	6	JGP			—	JV.		Glue	PF
DATE		1/3/67			—	1/3/67		1-4-67	1/9/67
		VDI							

PRIORITY: C
DRAWING TITLE: TANK INSTALLATION - D/S - PROP. TANK - +X131.14
DRAWING NO. LDW280-51900
EO NO. B2

ISSUED BY F. WOLFF X 1392 12/30/66 SECTION VDI GROUP NO. 335 PL 35

01
NAS 9-1100

MODEL OR END ITEM	NEXT ASSY	MODULE OR SER NO.	REQD PER MODULE OR END ITEM	MODEL OR END ITEM	NEXT ASSY	MODULE OR SER NO.	REQD PER MODULE OR END ITEM	MODEL OR END ITEM	NEXT ASSY	MODULE OR SER NO.	REQD PER MODULE OR END ITEM
								LEM	LSC280-4	LEM-1 (31)	2
PART NO.		GAEC SCH NO.		PART NO.		GAEC SCH NO.		PART NO. LDW280-51901-1		GAEC SCH NO. 50-2	

(2)

SH REV STATUS: FOR DESCRIPTION OF REV SEE SUBQ SH

SHEET	1.00	1.10	2.00	2,01	3				
REV	B	B	B	B	B				
SHEET									
REV									
SHEET									
REV									

LAST SECT LTR USED D-D

LAST DASH NO. USED -1

GRUMMAN REL INFO B

PRIM NO. LE(001)

207 PP 7/24/68

UNLESS OTHERWISE SPECIFIED DIMENSIONS ARE IN INCHES.
TOLERANCE UNLESS SPECIFIED
FRACTIONS - DECIMALS – ANGLES
± 1/32 ±.020 ± 1/2°

ORIG DWG AUTH

DETAIL SPEC REQUIREMENT

CLASS II ENGRG CHANGE

CLASS I ENGRG CHANGE

CONTRACT NO. NAS9-1100

LINE ITEM # 1

DOCUMENTATION TYPE II

DRAWN BY E.ERICKSON 11-15-65
~~RELIABILITY~~
LAYOUT BY FINGER
CHECKED BY WCG 1/12/66
GR.LEADER J. PUSATERI 1/13/66
VEH.DES.INT [illegible] 1/14/66
STRUCTURE JV 1/17
STRUCTURE Hilderman 1-18
WEIGHTS [illegible]
PROJ ENGR [illegible] 1/18
REL GROUP Lippincott 1/29

GRUMMAN AIRCRAFT ENGRG CORP
BETHPAGE, L. I., NEW YORK

SUPPORT ASSEMBLY
DESCENT STAGE OXIDIZER TANK +X131.140

SIZE B
CODE IDENT NO. 26512
LDW280-51901 B

SCALE NONE
SHEET 1.00 OF 5

ENG 77.1 9-64

01

NAS 9-1100

REVISIONS

CHANGE LTR	ITEM NO.	SHEET NO.	ZONE	~~SH CHG LTR~~	GRUMMAN INFO ONLY	DET SPEC	CLASS I	CLASS II	ENGRG ORDER	DESCRIPTION	EFFECTIVITY	DISPOSITION OF EXISTING PARTS		CHANGED BY AND DATE	ENGRG APPD	~~GOVT~~ APPD
												REWORK	SCRAP			
A	1								EO A1	EO A1 INITAL DRAWING RELEASE PARTS MADE PER E.O.	NOTED	NOT	REQD	E.ERICKSON 11-15-65		
	2									IN NOTE #8 LPC905-4406 WAS LPT905-4406, REMOVED REFER TO LPT905-14013 FOR DESTRUCTIVE PROCEDURE. & REMOVED DESTRUCTIVE TEST TO BE ACCOMPLISHED ON THE Ⓡ SECOND SUPPORT ASSY.	NOTED	NOT	REQD	WCG		
B	1	1.00, 1.10, 2.00 2.01 & 3.00	4C 6A 8A 10C						EO B1	IN FLD & B/M REMOVED: LDW280M15541-1 & -2 (1 EA) LDW280M15543-1 & -2 (3 EA) & REPLACED WITH LDW280M15548-3 & -4 AND LDW280M15549-5 & -6 RESPECTIVELY. REVISED SECTIONS B-B, C-C & D-D & FASTENERS ACCORDINGLY.	LEM-1	✓		L. DIXON 6-15-66		
	2	1.10 2.00 & 3.00								Ⓡ REF E.O. B1 IN FLD OF E.O. LDW280M15548-4 (REF) WAS LDW280M15548-2 (REF) SHOULD BE WAS LDW280M15541-2 (REF)	NOT REQD	NOT	REQD			8-3-66

FOR CONTINUATION OF REVISIONS SEE SHEET

ENG 77.3 5-64

GRUMMAN AIRCRAFT ENGRG CORP, BETHPAGE, L. I., NEW YORK

SIZE	CODE IDENT NO.		
B	26512	LDW280-51901	B
SCALE NONE			SHEET 1.10

01

NAS 9-1100

QTY PER ASSEMBLY -1	CODE IDENT	PART NO.	I&T	NOMENCLATURE OR DESCRIPTION	MATERIAL	GOVT SPEC	COML SPEC	STOCK SIZE	PROCESS SYM	FINISH NO.	ZONE
8		G120-032-11-6	E	SHIM	GRUM. STD.						
4		LDW280M15539-1	E	CHANNEL	SEE DWG.						
3		LDW280M15549-6	↑	FITTING	↑						
3		LDW280M15549-5		FITTING							
1		LDW280M15548-4		FITTING							
1		LDW280M15548-3		FITTING							
4		LDW280M15514-2	↓	FITTING							
4		LDW280M15514-1	E	FITTING							
1		LDW280H23903-3	S	SKIRT ASSY.							
2		LDW280-15551-29	E	SPLICE PLATE.							
2		↑ -19	↑	ANGLE							
2		-21		ANGLE							
2		-25		ANGLE							
4		↓ -24		BRACKET							
4		LDW280-15551-23		BRACKET							
2		LDW280-15549-15		TEE							
2		LDW280-15549-11	↓	SUPPORT	↓						
4		LDW280-15516-17	E	ANGLE	SEE DWG.						
		LDW280-51901-1	S	SUPPORT ASSY.					NONE	NONE	

SYM OR NO.	PROCESS OR FINISH	GRUMMAN SPEC OR MILITARY SPEC	SYM OR NO.	PROCESS OR FINISH	GRUMMAN SPEC OR MILITARY SPEC	SYM OR NO.	PROCESS OR FINISH	GRUMMAN SPEC OR MILITARY SPEC

I&T: IDENTIFICATION AND TRACEABILITY IN ACCORDANCE WITH : LPC-19-2 (GRUMMAN), LPC-19-3 (VENDOR)

GRUMMAN AIRCRAFT ENGRG CORP, BETHPAGE, L. I., NEW YORK

SIZE	CODE IDENT NO.		
B	26512	LDW280-51901	B

SCALE NONE

SHEET 2.00

ENG 77.2 7-65

01

NAS 9-1100

QTY PER ASSEMBLY -1	CODE IDENT	PART NO.	I&T	NOMENCLATURE OR DESCRIPTION	MATERIAL	GOVT SPEC	COML SPEC	STOCK SIZE	PROCESS SYM	FINISH NO.	ZONE
148	00948	ML SP-B4-6	E	RIVET							
76	00948	ML SP-B4-5		RIVET							
		MS20470DD5		RIVET	STD PART						
		MS20470AD4		RIVET							
8		NAS1097AD4		RIVET							
32		NAS1104-5		BOLT							
16		NAS1104-4		BOLT							
32		NAS1054-6-4		RIVET							
32		NAS528A6		COLLAR							
48		MS21042L4		NUT							
128		AN960D416L		WASHER	STD. PART						
		SEE NOTE 3		ADHESIVE							
	75495	SEE NOTE 4	E	SHIM							

SYM OR NO.	PROCESS OR FINISH	GRUMMAN SPEC OR MILITARY SPEC	SYM OR NO.	PROCESS OR FINISH	GRUMMAN SPEC OR MILITARY SPEC	SYM OR NO.	PROCESS OR FINISH	GRUMMAN SPEC OR MILITARY SPEC

I & T: IDENTIFICATION AND TRACEABILITY IN ACCORDANCE WITH :

GRUMMAN AIRCRAFT ENGRG CORP, BETHPAGE, L. I., NEW YORK

SIZE	CODE IDENT NO.		
B	26512	LDW280-51901	B
SCALE NONE		SHEET 2.01	

ENG 77.2 7-65

01

NAS 9-1100

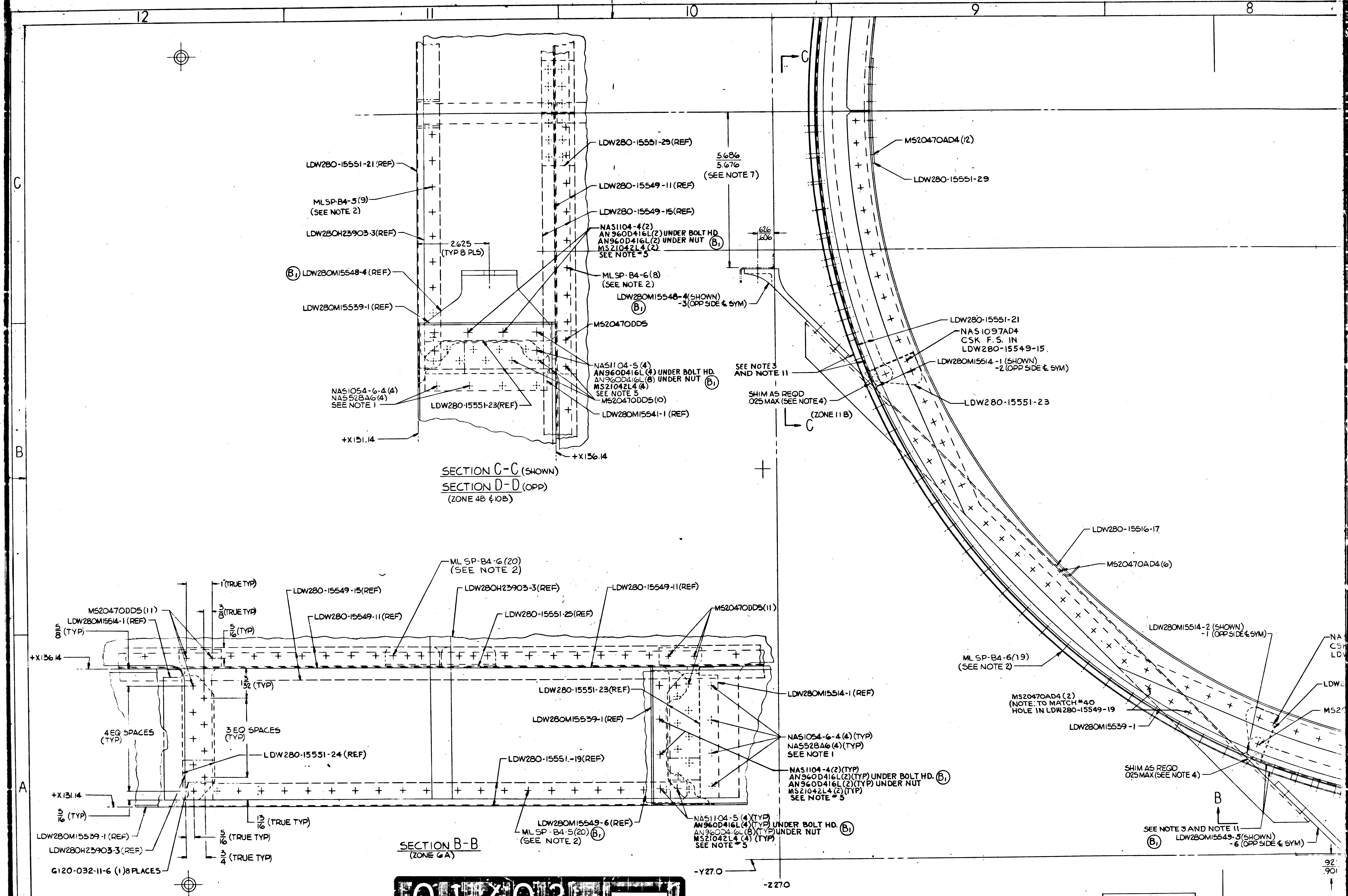
12
11
10
9
8
C
B
A
LDW280-15551-21 (REF)
MLSP-B4-5(9)
(SEE NOTE 2)
LDW280H23903-3(REF)
2.625
(TYP 8 PLS)
B1 LDW280M15548-4 (REF)
LDW280M15539-1 (REF)
LDW280-15551-29(REF)
LDW280-15549-11 (REF)
LDW280-15549-15(REF)
NAS1104-4(2)
AN960D416L(2) UNDER BOLT HD
AN960D416L(2) UNDER NUT B1
MS21042L4 (2)
SEE NOTE # 5
MLSP-B4-6(8)
(SEE NOTE 2)
MS20470DD5
NAS1104-5 (4)
AN960D416L (4) UNDER BOLT HD.
AN960D416L(8) UNDER NUT B1
MS21042L4 (4)
SEE NOTE 5
MS20470DD5(10)
LDW280M15541-1 (REF)
NAS1054-6-4 (4)
NAS528A6 (4)
SEE NOTE 1
LDW280-15551-23(REF)
+X131.14
+X136.14
5.686
5.676
(SEE NOTE 7)
.626
.606
LDW280M15548-4(SHOWN)
-3(OPP SIDE ℄ SYM)
B1
C
C
(ZONE 11 B)
MS20470AD4 (12)
LDW280-15551-29
LDW280-15551-21
NAS1097AD4
CSK F.S. IN
LDW280-15549-15
LDW280M15514-1 (SHOWN)
-2 (OPP SIDE ℄ SYM)
SEE NOTE 3
AND NOTE 11
SHIM AS REQD
.025 MAX (SEE NOTE 4)
LDW280-15551-23
LDW280-15516-17
MS20470AD4(6)
ML SP-B4-6 (20)
(SEE NOTE 2)
LDW280-15549-15(REF)
LDW280H23903-3(REF)
LDW280-15549-11(REF)
1 (TRUE TYP)
3/8 (TRUE TYP)
5/16 (TYP)
MS20470DD5 (11)
LDW280M15514-1 (REF)
5/8 (TYP)
LDW280-15549-11 (REF)
LDW280-15551-25(REF)
MS20470DD5(11)
+X136.14
1 3/32 (TYP)
4 EQ SPACES
(TYP)
3 EQ SPACES
(TYP)
LDW280-15551-24 (REF)
LDW280-15551-19(REF)
LDW280-15551-23(REF)
LDW280M15539-1(REF)
LDW280M15514-1 (REF)
NAS1054-6-4 (4) (TYP)
NAS528A6 (4) (TYP)
SEE NOTE 1
NAS1104-4(2)(TYP)
AN960D416L(2)(TYP) UNDER BOLT HD. B1
AN960D416L(2)(TYP) UNDER NUT
MS21042L4 (2)(TYP)
SEE NOTE # 5
+X131.14
5/16 (TYP)
13/16 (TRUE TYP)
LDW280M15539-1 (REF)
5/16 (TRUE TYP)
LDW280H23903-3 (REF)
3/4 (TRUE TYP)
G120-032-11-6 (1) 8 PLACES
LDW280M15549-6(REF)
ML SP-B4-5(20) B1
(SEE NOTE 2)
NAS1104-5 (4)(TYP)
AN960D416L(4)(TYP) UNDER BOLT HD. B1
AN960D416L(8)(TYP) UNDER NUT
MS21042L4 (4) (TYP)
SEE NOTE # 5
-Y27.0
-Z27.0
ML SP-B4-6(19)
(SEE NOTE 2)
MS20470AD4 (2)
(NOTE: TO MATCH #40
HOLE IN LDW280-15549-19
LDW280M15539-1
LDW280M15514-2 (SHOWN)
-1 (OPP SIDE ℄ SYM)
SHIM AS REQD
.025 MAX (SEE NOTE 4)
B
SEE NOTE 3 AND NOTE 11
B1 LDW280M15549-5(SHOWN)
-6 (OPP SIDE ℄ SYM)
.921
.901
NA
CSK
LDW
LDW2
MS2

SECTION C-C (SHOWN)
SECTION D-D (OPP)
(ZONE 4B & 10B)

SECTION B-B
(ZONE 6A)

01/03 NAS 9-1100

CODE IDENT NO. 26512	
LDW280-51901	SH 3

8
7
6
5
4
D
-Y.00(℄ OF SYM)
TEMPLATE BUTT LINE
5.376
5.366
(SEE NOTE 6)
5
10 TO PHOTO BUTT LINE
PHOTO BUTT LINE
.921
.901
REAM (.3125-.3145) TYP 8 PLACES
LDW280M15549-5(SHOWN)
-6 (OPP SIDE ℄ SYM) (B1)
MS20470AD4(12)
LDW280-15551-29
LDW280-15551-21
NAS1097AD4
CSK F.S. IN
LDW280-15549-15
LDW280M15514-2 (SHOWN)
-1 (OPP SIDE ℄ SYM)
SEE NOTE 3 AND NOTE 11
SHIM AS REQD
.025 MAX (SEE NOTE 4)
LDW280-15551-24
(ZONE 11B)
D
55
LDW280-15516-17
MS20470AD4(6)
MLSP-B4-6 (19)
(SEE NOTE 2)
LDW280H23903-3
LDW280-15551-25(REF)
LDW280H23903-3(REF)
LDW280M15514-1 (SHOWN)
-2 (OPP SIDE ℄ SYM)
LDW280-15549-15
LDW280-15551-19
NAS1097AD4
CSK F.S. IN
LDW280-15549-15
LDW280M15539-1
LDW280-15551-23
SHIM AS REQD
.025 MAX (SEE NOTE 4)
B
(ZONE 11A)
SEE NOTE 3 AND NOTE 11
LDW280M15549-5 (SHOWN)
-6 (OPP SIDE ℄ SYM) (B1)
-Y270
-Z81.0
LDW280-15551-25
(ZONE 3A)
A
MS20470AD4(10)
MS20470AD4 (1) 8 PLACES
LDW280-15551-24
NAS1097AD4
CSK F.S. IN
LDW280-15549-15
LDW280M15514-2 (SHOWN)
-1 (OPP SIDE ℄ SYM)
LDW280-15549-11
LDW280-15549-11
A
-Z54.0(REF)
SHIM AS REQD
.025 MAX (SEE NOTE 4)
B
SEE NOTE 3 AND NOTE 11
(B1)
LDW280M15549-5(SHOWN)
-6 (OPP SIDE ℄ SYM)
.921
.901
5.376
5.366
(SEE NOTE 6)
(SEE NOTE 6)
5.376
5.366
.921
.901
w280-15516-17
MS20470AD4(6)
19
15539-1

LDW280-51901-1 ASSY,
VIEW LOOKING DOWN

CODE IDENT NO. 26512
LDW280-51901 SH 3

02/03

NAS 9-1100

CODE IDENT NO. 26512
LDW280-51901 SH 3

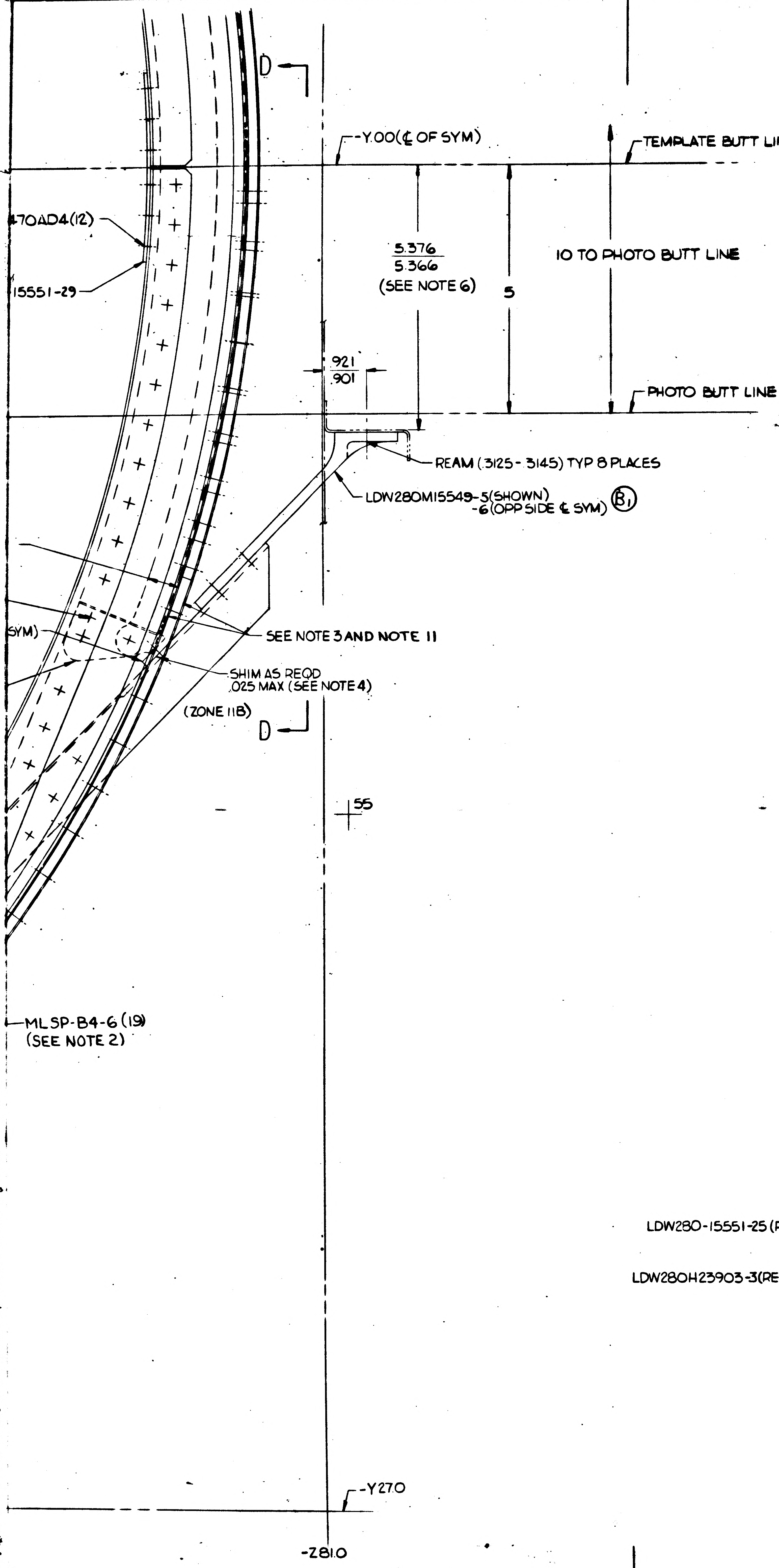

D
-Y.00(℄ OF SYM)
TEMPLATE BUTT LINE
470AD4(12)
15551-29
5.376
5.366
(SEE NOTE 6)
5
10 TO PHOTO BUTT LINE
.921
.901
PHOTO BUTT LINE
REAM (.3125-.3145) TYP 8 PLACES
LDW280M15549-5(SHOWN)
-6(OPP SIDE ℄ SYM)
B1
SYM)
SEE NOTE 3 AND NOTE 11
SHIM AS REQD
.025 MAX (SEE NOTE 4)
(ZONE 11B)
D
55
MLSP-B4-6 (19)
(SEE NOTE 2)
-Y270
-Z810

NOTES:

1- FOR NAS1054-6 RIVETS FINAL HOLE SIZE TO BE (.188-.190)

2- FOR MLSP-B4 RIVETS, FINAL HOLE SIZE TO BE (.129-.133)

3- APPLY #919 EPON ADHESIVE TO ALL FAYING SURFACES PRIOR TO ASSEMBLY.
  (a) MIX ADHESIVE PER, LSP14-14400
  (b) PRIOR TO ADHESIVE APPLICATION CLEAN FAYING SURFACES PER LSP14-7011
  (c) ASSEMBLE AND RIVET JOINTS WHILE ADHESIVE IS WET.
  (d) WORKING LIFE OF ADHESIVE IS 8 HOURS AT 75°F CURE CYCLE IS 3 DAYS AT 75°F OR 3 HOURS AT 180°F.

4. TO BE MADE FROM ALUMINUM LAMINATED SHIM .003 LAMINATION, 5052-H39.

5. FOR NAS1104 BOLTS, FINAL HOLE SIZE TO BE (.2500-.2520).

6. AN INCREASE IN TOLERANCE TO 5.361-5.391 IS PERMISSIBLE AFTER PROOF TEST OF SUPPORT ASSY.

7. AN INCREASE IN TOLERANCE TO 5.671-5.701 IS PERMISSIBLE AFTER PROOF TEST OF SUPPORT ASSY.

8. TEST REQUIREMENT:
REFER TO LPC-905-44006 FOR PROOF TEST PROCEDURE.

SKIRTS ARE TO BE PROOF TESTED TO AN AXIALLY COMPRESSIVE LOAD OF 33,200 POUNDS. THIS LOAD IS TO BE UNIFORMLY DISTRIBUTED AT SKIRT UPPER RING AND BALANCED BY EIGHT EQUAL LOADS AT THE BEAM EXTREMITIES.

9. PAINT "OXIDIZER" ON OUTER SURFACE OF SKIRTS 2 PLACES, 180° APART WITH 4" HIGH LETTERING PER GAEC #1017 INSIGNIA RED-SPEC ANA 509. HEAT CURE AT 100°F (MAX) FOR 1 HOUR.

10. IT IS PERMISSIBLE TO HAVE A SHANKED RIVET GAP OF .002 INCHES BETWEEN FLANGE OF LDW280-15549-11 SUPPORTS & LDW280H23903-3 SKIRT ASSEMBLY.

11. ALTERNATE CURE-EPON 919 AND CORFIL 615/DTA USED IN INSTALLATION OF LDW280M15514 FITTINGS MAY BE CURED FOR 6 HOURS MINIMUM AT 120°F OR FOR 3 HOURS MINIMUM AT 180°F.

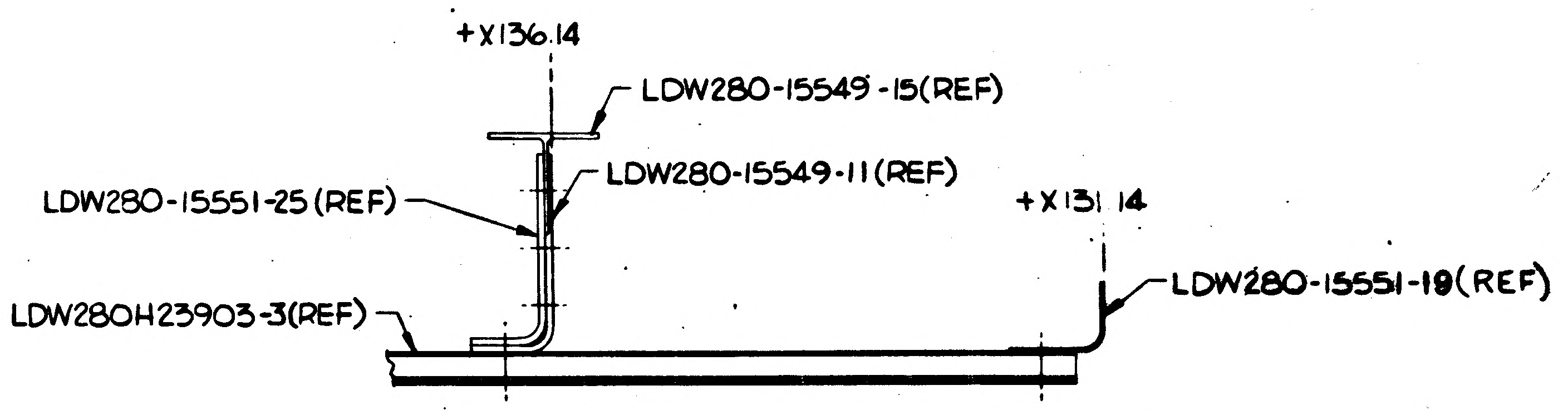

+X136.14
LDW280-15549-15(REF)
LDW280-15549-11(REF)
LDW280-15551-25(REF)
+X131.14
LDW280H23903-3(REF)
LDW280-15551-19(REF)

SECTION A-A
(ZONE 7A)

REVISIONS

REVISION LETTER	ITEM NO.	ZONE	AUTHORITY FOR REVISION: GRUMMAN INFO ONLY / DCRF OR ECP	CLASS II	CLASS I	DET SPEC REQ	ENGRG ORDER IDEC NO.	DESCRIPTION	REVISED BY AND DATE	EFFECTIVE ON MILITARY NUMBER	DISPOSITION OF EXIST PARTS: RE-WORK	SCRAP	ENGRG APPD	GOVT APPD

MANUFACTURING OPERATIONS UNLESS OTHERWISE SPECIFIED NOTES CHECKED ✓ APPLY TO THIS DWG.	
RUBBER STAMP PART NUMBER AND ALL OTHER MARKINGS IN REGION MARKED ▭ USE BOTH SIDES IF NECESSARY.	✓
INSPECTION INFORMATION MINIMUM PERMISSIBLE ~~AVERAGE~~ EDGE DISTANCE ~~MARKED~~ IS 1½ FASTENER DIA. FROM FASTENER ℄	✓
LENGTH OF AN, NAS & MS AL ALY RIVETS SHORTER THAN 1 INCH ARE NOT SPECIFIED.	

DWG. SIZE 34 X 124

PRINTING INFO ONLY
FULL SIZE SHEET AREA (36 X/32)= SQ. FT.
1/2 SIZE SHEET AREA (1/4 OF FULL)= SQ. FT.

PRINT TRIM LINE

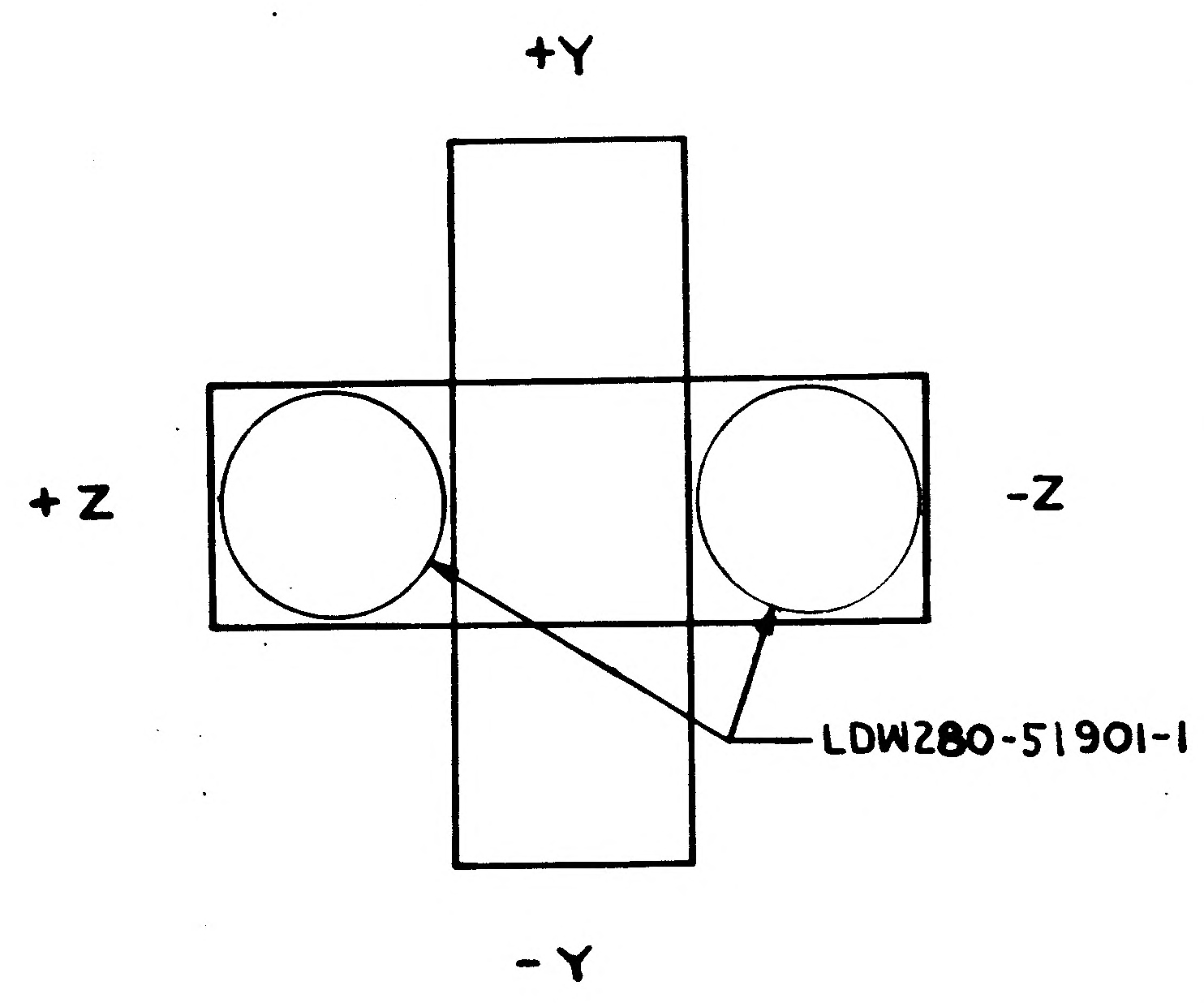

+Y
+Z
-Z
LDW280-51901-1
-Y

VIEW LOOKING DOWN
ENGR REF ONLY

03703 NAS 9-1100

LDW280-51901 B

LDW280-51901 B

CODE IDENT NO. 26512
LDW280-51901 SH 3

GRUMMAN AIRCRAFT ENGRG CORP
BETHPAGE, L. I., N. Y.

LEM	CODE IDENT NO. 26512	SIZE J	LDW280-51901	B
MODEL	SCALE FULL		SHEET 3.00	

FOR PHOTO REPRODUCTION K2

THIS IS AN ORIGINAL DRAWING

								LEM	LSC280-4	LEM-1(31)	2
MODEL OR END ITEM	NEXT ASSY	MODULE OR SER NO.	REQD PER MODULE OR END ITEM	MODEL OR END ITEM	NEXT ASSY	MODULE OR SER NO.	REQD PER MODULE OR END ITEM	MODEL OR END ITEM	NEXT ASSY	MODULE OR SER NO.	REQD PER MODULE OR END ITEM
PART NO.		GAEC SCH NO.		PART NO.		GAEC SCH NO.		PART NO. LDW280-51902-1		GAEC SCH NO. 50-2	

SH REV STATUS: FOR DESCRIPTION OF REV SEE SUBQ SH

SHEET	1.00	1.10	2.00	2.01		3.00				
REV	B	B	B	B		B				
SHEET										
REV										
SHEET										
REV										

LAST SECT LTR USED K-K

LAST DASH NO. USED -1

GRUMMAN REL INFO B

PRIM NO. 207 LE(001) MP 7/25/68

UNLESS OTHERWISE SPECIFIED DIMENSIONS ARE IN INCHES.

TOLERANCE UNLESS SPECIFIED FRACTIONS - DECIMALS - ANGLES ±1/32 ±.020 ±1/2°

ORIG DWG AUTH

DETAIL SPEC REQUIREMENT

CLASS II ENGRG CHANGE

CLASS I ENGRG CHANGE

CONTRACT NO. NAS 9-1100

LINE ITEM #1

DOCUMENTATION TYPE II

(2)

DRAWN BY P.SCHELL 17 NOV 65

LAYOUT BY SANCHIRICO

CHECKED BY WCG 12/4/65

GR LEADER J. PUSATERI 12/11

VEH DES INT 12/21

STRUCTURES 12/22

STRUCTURES Hilderman 12/22

WEIGHTS W. C. Hanchas

RELIABILITY —

PROJ ENGR 1/5

REL GROUP

GRUMMAN AIRCRAFT ENGRG CORP
BETHPAGE, L. I., NEW YORK

SUPPORT ASSEMBLY
DESCENT STAGE ~ FUEL TANK + X131.140

SIZE B

CODE IDENT NO. 26512

LDW280-51902 B

SCALE NONE

SHEET 1.00 OF 5

ENG 77.1 9-64

01

NAS 9-1100

REVISIONS

CHANGE LTR	ITEM NO.	SHEET NO.	ZONE	SH CHG LTR	GRUMMAN INFO ONLY	DET SPEC	CLASS I	CLASS II	ENGRG ORDER	DESCRIPTION	EFFECTIVITY	DISPOSITION OF EXISTING PARTS		CHANGED BY AND DATE	ENGRG APPD	~~GOVT~~ APPD
												REWORK	SCRAP			
A	1	1,1.10, 2 2.01 ¢ 3								E.O. A1, INITIAL DWG RELEASE PARTS MADE PER E.O.	NOTED	NOT R	EQD	P.SCHELL 17 NOV 65	☒	☒
	2	1.10, 3								IN NOTE #9 REMOVED "REFER TO LPT-905-44001 FOR DESTRUCTIVE TEST PROCEDURE" ¢ REMOVED "DESTRUCTIVE TEST TO BE ACCOMPLISHED ON THE THIRD SUPPORT ASSY." LPC-905-44006 WAS LPT-905-44001.	NOT REQD	NOT R	EQD	WCG		
B	1	1.00, 1.10, 2.00, 2.01 ¢ 3.00							E.O.B1	IN F/D ¢ B/M REMOVED: LDW280M15542-1 ¢ -2 (1EA), LDW280M15544-1 (3), LDW280M15544-2 (2), LDW280M15543-2 (1) ¢ REPLACED WITH LDW280M15553-3 ¢ -4 LDW280M15554-3 ¢ -4, LDW280M15549-7 RESP. REVISED SECT. C-C, D-D, H-H, J-J ¢ FASTENERS ACCORDINGLY. NOTE 5, NAS1104 WAS NAS1304.	LEM-1	✓		E.G. ERICKSON 7-5-66		
	2	3.00								DELETED NOTE 1, REPLACED WITH NOTE 12	NOT REQD	NOT	REQD	BELTRAMI 7-12-66	FEP	

FOR CONTINUATION OF REVISIONS SEE SHEET

GRUMMAN AIRCRAFT ENGRG CORP, BETHPAGE, L. I., NEW YORK

SIZE	CODE IDENT NO.		
B	26512	LDW280-51902	B
SCALE NONE			SHEET 1.10

ENG 77.3 5-64

01

NAS 9-1100

QTY PER ASSEMBLY -1	CODE IDENT	PART NO.	I&T	NOMENCLATURE OR DESCRIPTION	MATERIAL	GOVT SPEC	COML SPEC	STOCK SIZE	PROCESS SYM	FINISH NO.	ZONE
2		LDW280M15554-4	E	FITTING	SEE DWG						7A
3		LDW280M15554-3									5A
1		LDW280M15549-7									5A
1		LDW280M15553-4									9B
1		LDW280M15553-3		FITTING							9B
4		LDW280M15540-1		CHANNEL							7A
4		LDW280M15514-2		FITTING							8B
4		LDW280M15514-1	E	FITTING							8B
1		LDW280H23904-1	S	SKIRT ASSY							4B
2		LDW280-15551-29	E	PLATE							8C
2		-25		ANGLE							6A
4		-24		BRACKET							
4		-23		BRACKET							
4		-21		ANGLE							3C
2		LDW280-15551-19		ANGLE							5A
2		LDW280-15549-17		ANGLE							8B
2		LDW280-15549-13		TEE							5A
4		LDW280-15516-17	E	ANGLE	SEE DWG						5B
									NONE	NONE	6A
		LDW280-51902-1	S	SUPPORT ASSY					NONE	NONE	6A

SYM OR NO.	PROCESS OR FINISH	GRUMMAN SPEC OR MILITARY SPEC	SYM OR NO.	PROCESS OR FINISH	GRUMMAN SPEC OR MILITARY SPEC	SYM OR NO.	PROCESS OR FINISH	GRUMMAN SPEC OR MILITARY SPEC

I&T: IDENTIFICATION AND TRACEABILITY IN ACCORDANCE WITH :
LPC-19-2 (GRUMMAN) LPC-19-3 (VENDOR)

GRUMMAN AIRCRAFT ENGRG CORP, BETHPAGE, L. I., NEW YORK

SIZE	CODE IDENT NO.		
B	26512	LDW280-51902	B
SCALE NONE		SHEET 2.00	

ENG 77.2 7-65

01

NAS 9-1100

QTY PER ASSEMBLY -1	CODE IDENT	PART NO.	I&T	NOMENCLATURE OR DESCRIPTION	MATERIAL	GOVT SPEC	COML SPEC	STOCK SIZE	PROCESS SYM	FINISH NO.	ZONE
		SEE NOTE #2	E	ADHESIVE							
		SEE NOTE #12		SHIM							
12	00948	ML SP-B4-6		RIVET	COML PART						
208	00948	ML SP-B4-5		RIVET	COML PART						
32		NAS1104-4		BOLT	STD PART						
16		NAS1104-3		BOLT							
32		NAS1054-6-4		RIVET							
32		NAS528A6		COLLAR							
48		MS21042L4		NUT							
8		G120-.032-11-6		SHIM							
		MS20470DD5		RIVET							
		MS20470AD4		RIVET							
64		AN960D416L	E	WASHER	STD PART						

SYM OR NO.	PROCESS OR FINISH	GRUMMAN SPEC OR MILITARY SPEC	SYM OR NO.	PROCESS OR FINISH	GRUMMAN SPEC OR MILITARY SPEC	SYM OR NO.	PROCESS OR FINISH	GRUMMAN SPEC OR MILITARY SPEC

I & T: IDENTIFICATION AND TRACEABILITY IN ACCORDANCE WITH :

GRUMMAN AIRCRAFT ENGRG CORP, BETHPAGE, L. I., NEW YORK

SIZE	CODE IDENT NO.		
B	26512	LDW280-51902	B

SCALE NONE SHEET 2.01

ENG 77.2 7-65

01

NAS 9-1100

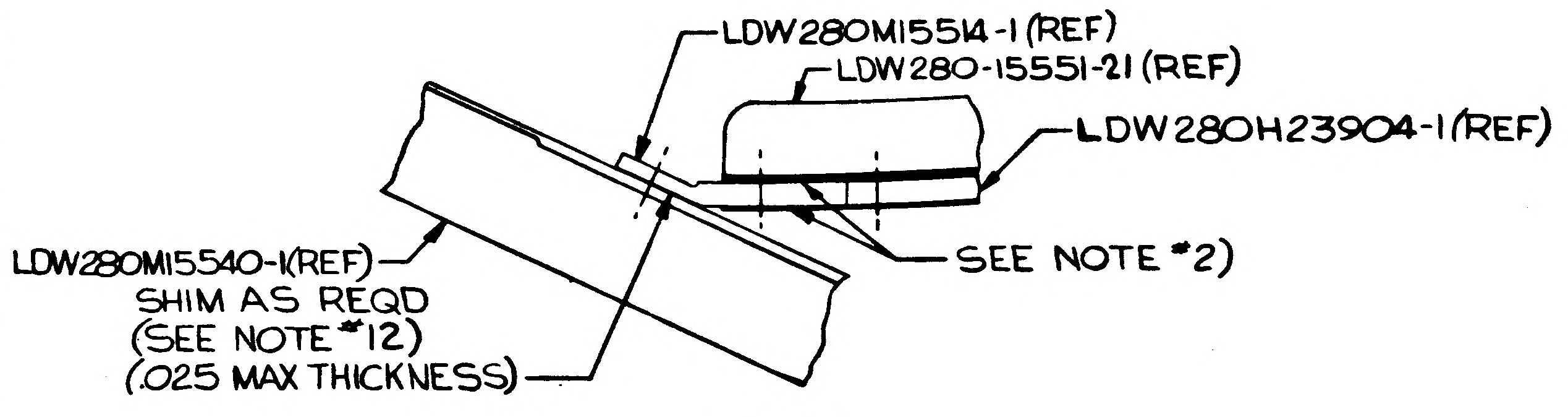

LDW280M15514-1(REF)
LDW280-15551-21(REF)
LDW280H23904-1(REF)
LDW280M15540-1(REF)
SHIM AS REQD
(SEE NOTE #12)
(.025 MAX THICKNESS)
SEE NOTE #2

SECTION K-K
(ZONE 10 B)

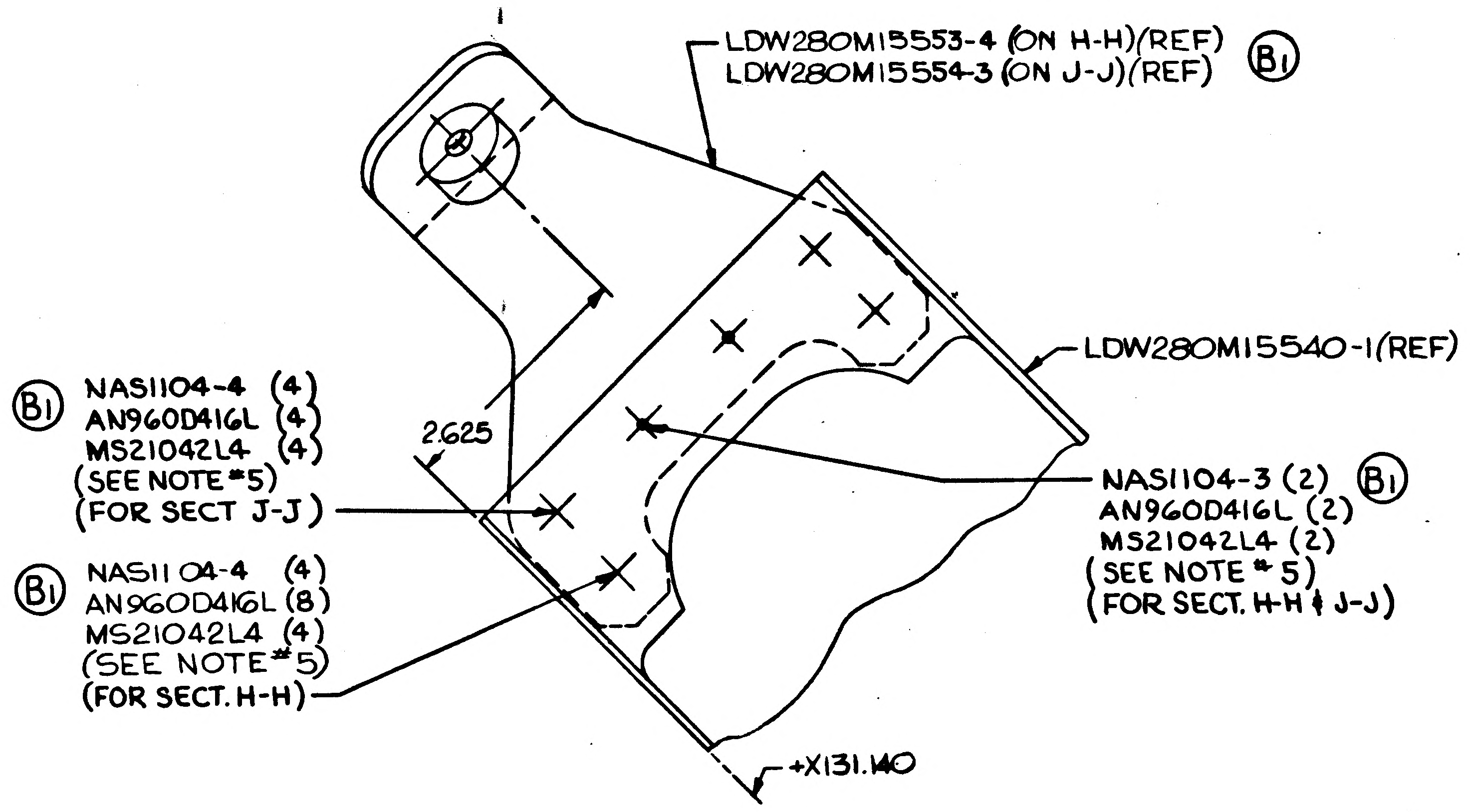

LDW280M15553-4 (ON H-H)(REF)
LDW280M15554-3 (ON J-J)(REF)
B1
LDW280M15540-1(REF)
B1 NAS1104-4 (4)
AN960D416L (4)
MS21042L4 (4)
(SEE NOTE #5)
(FOR SECT J-J)
B1 NAS1104-4 (4)
AN960D416L (8)
MS21042L4 (4)
(SEE NOTE #5)
(FOR SECT. H-H)
2.625
NAS1104-3 (2) B1
AN960D416L (2)
MS21042L4 (2)
(SEE NOTE #5)
(FOR SECT. H-H & J-J)
+X131.140

VIEW H-H (SHOWN)(ZONE 8B)
J-J (OPP)(ZONE 7A)

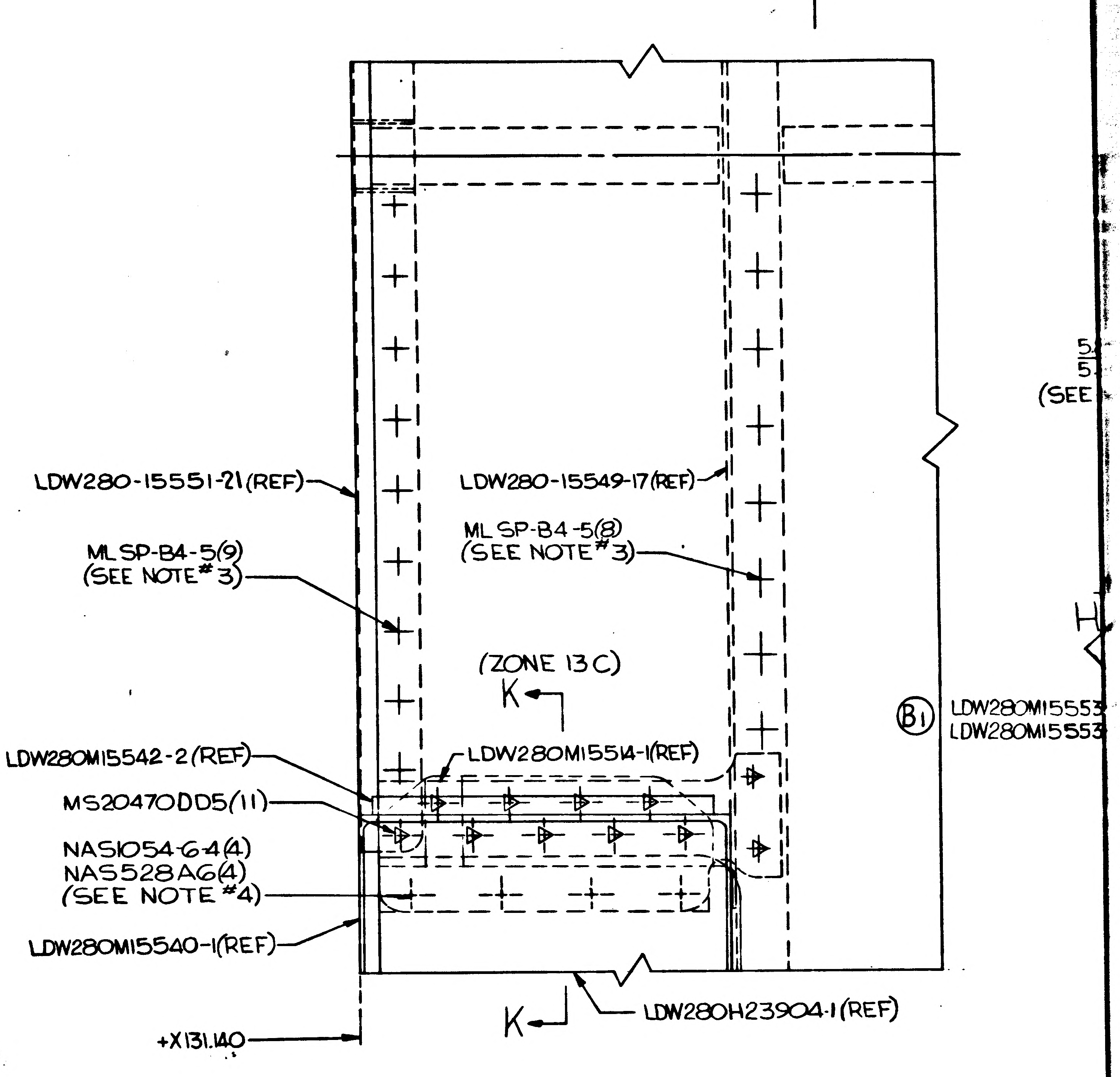

LDW280-15551-21(REF)
LDW280-15549-17(REF)
ML SP-B4-5(9)
(SEE NOTE #3)
ML SP-B4-5(8)
(SEE NOTE #3)
(ZONE 13C)
K
LDW280M15542-2(REF)
LDW280M15514-1(REF)
MS20470DD5(11)
NAS1054-6-4(4)
NAS528A6(4)
(SEE NOTE #4)
LDW280M15540-1(REF)
+X131.140
K
LDW280H23904-1(REF)
B1 LDW280M15553
LDW280M15553

VIEW F-F (SHOWN)(ZONE 9C)
G-G (OPP)(ZONE 3C)

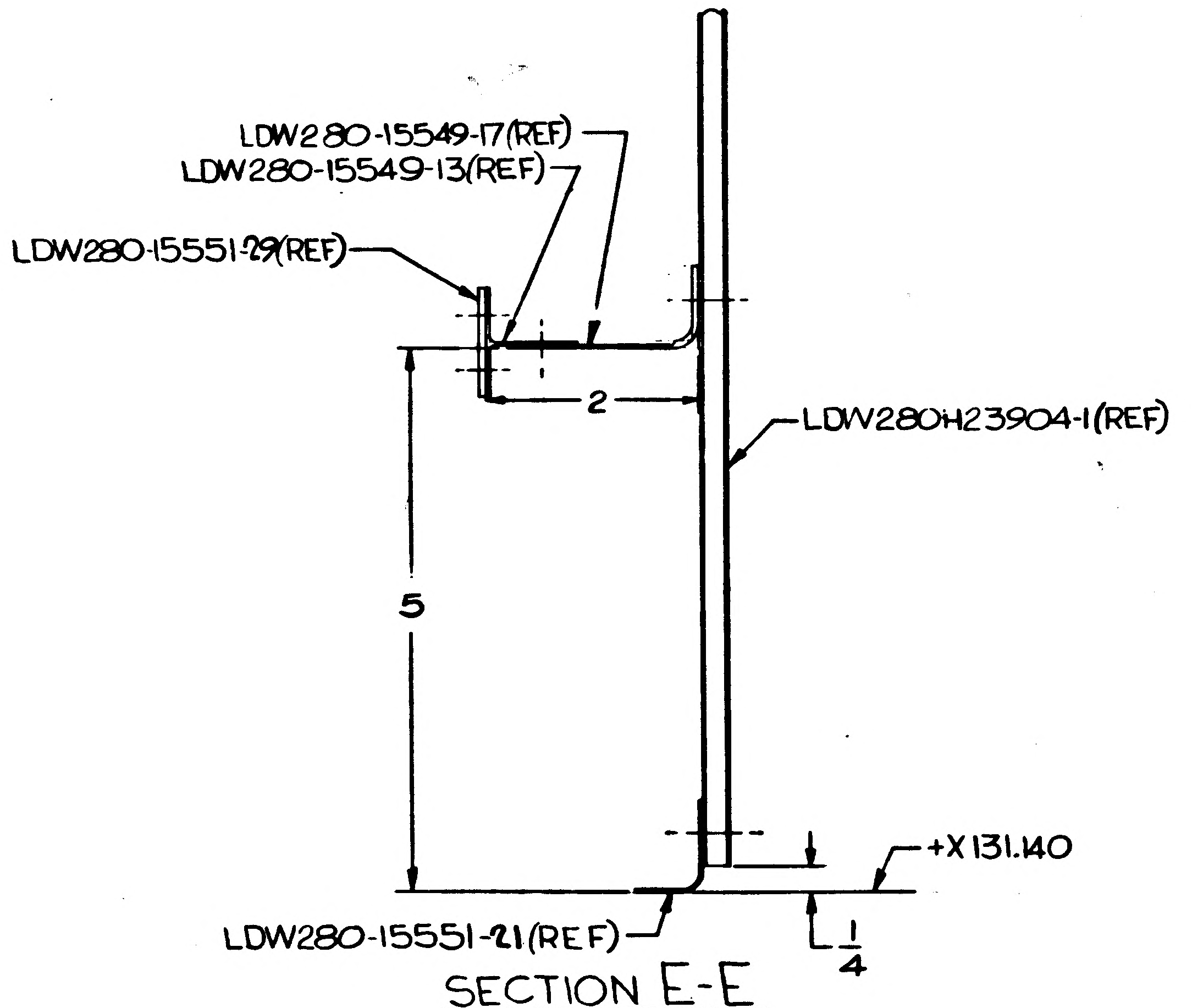

LDW280-15549-17(REF)
LDW280-15549-13(REF)
LDW280-15551-29(REF)
2
LDW280H23904-1(REF)
5
+X131.140
LDW280-15551-21(REF)
1/4

SECTION E-E
(ZONE 4C)

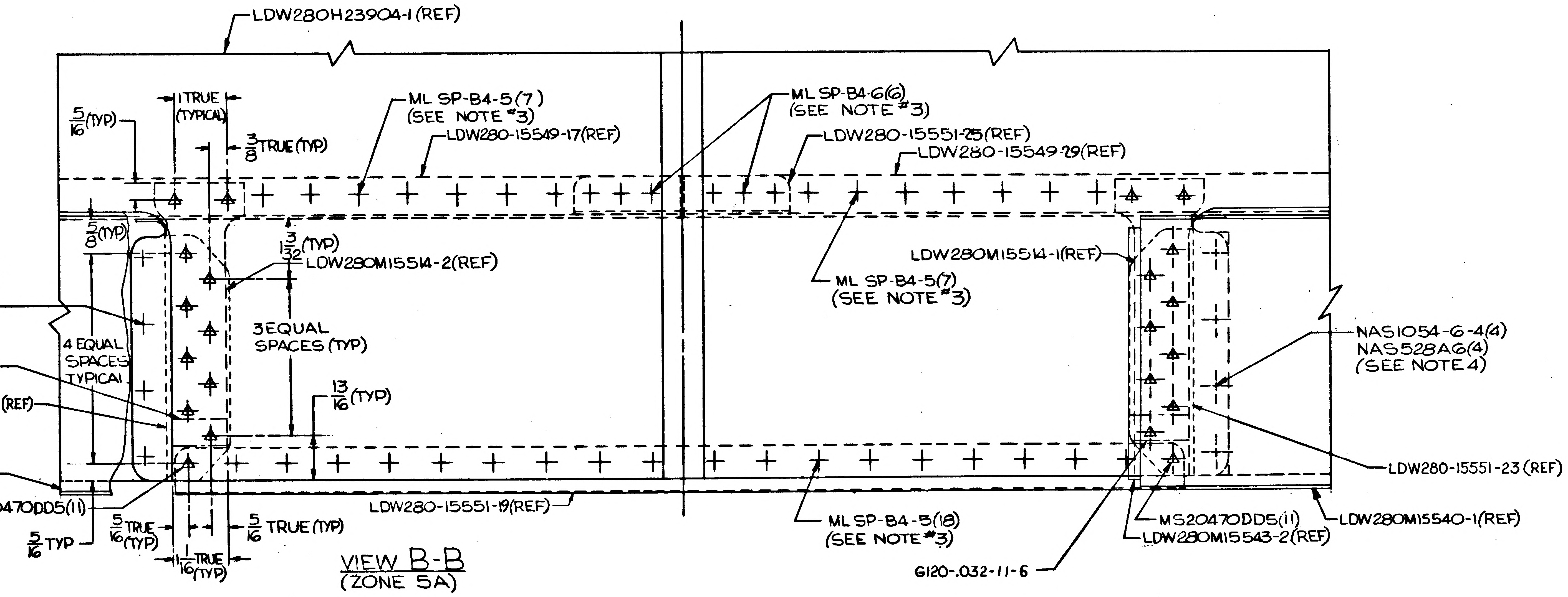

LDW280H23904-1(REF)
5/16 (TYP)
1 TRUE (TYPICAL)
3/8 TRUE (TYP)
ML SP-B4-5(7)
(SEE NOTE #3)
LDW280-15549-17(REF)
ML SP-B4-6(6)
(SEE NOTE #3)
LDW280-15551-25(REF)
LDW280-15549-29(REF)
5/8 (TYP)
1 3/32 (TYP)
LDW280M15514-2(REF)
LDW280M15514-1(REF)
ML SP-B4-5(7)
(SEE NOTE #3)
NAS1054-6-4(4)
NAS528A6(4)
(SEE NOTE #4)
4 EQUAL SPACES TYPICAL
3 EQUAL SPACES (TYP)
13/16 (TYP)
LDW280-15551-23 (REF)
NAS1054-6-4(4)
NAS528A6(4)
(SEE NOTE #4)
G120-.032-11-6
LDW280-15551-24 (REF)
LDW280M15540-1(REF)
MS20470DD5(11)
5/16 TYP
5/16 TRUE (TYP)
1 1/16 TRUE (TYP)
5/16 TRUE (TYP)
LDW280-15551-19(REF)
ML SP-B4-5(18)
(SEE NOTE #3)
G120-.032-11-6
MS20470DD5(11)
LDW280M15543-2(REF)
LDW280M15540-1(REF)

VIEW B-B
(ZONE 5A)

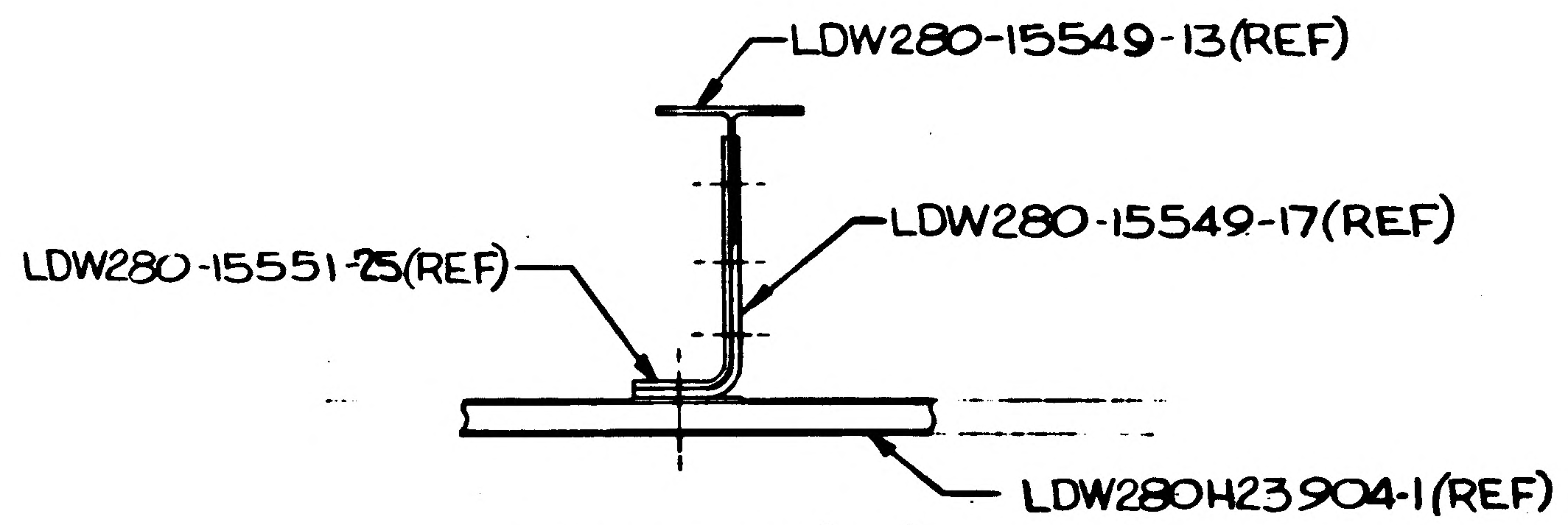

LDW280-15549-13(REF)
LDW280-15549-17(REF)
LDW280-15551-25(REF)
LDW280H23904-1(REF)

SECTION A-A
(ZONE 6A)

01/03
NAS 9-1100

CODE IDENT NO 26512
LDW280-51902
SHEET 3

9
8
7
6
5
(ZONE 10 B)
F
¢ OF SYMMETRY EXCEPT AS NOTED
1/16 GAP MAX
1 29/32
MS20470AD4(6)
LDW280-15551-29
LDW280-15551-29(REF)
LDW280-15549-13(REF)
5.810
5.800
(SEE NOTE #8)
LDW280-15551-21
MS20470AD4(15)
-17(REF)
H
.520
.500
B1 LDW280M15553-4 (SHOWN)
LDW280M15553-3(OPP ¢ OF SYM)
L
LDW280M15514-1(SHOWN)
LDW 280M15514-2(OPP ¢ OF SYM)
5/16
NAS1097AD4
CSK F S IN
LDW280-15549-13
1.130
LDW280-15551-23
(ZONE 11C)
H
F
MS20470AD4
LDW280H23904-1(REF)
OWN)(ZONE 9C)
PP)(ZONE 3C)
LDW280M15540-1(REF)
LDW280-15516-17
MS20470AD4(6)
LDW280-15549-13(REF)
LDW280-15516-17(REF)
LDW280-15549-17
MS20470AD4(19)
NAS1054-6-4(4)
NAS528A6(4)
(SEE NOTE 4)
ML SP-B4-5(19)
(SEE NOTE #3)
LDW280M15540-1
LDW280-15551-23 (REF)
LDW280M15540-1(REF)
REF)
LDW280-15551-24
NAS1097AD4
CSK F S IN
LDW280-15549-13
22 1/2°
MS20470AD4
MS20470AD4(12)
J
B
LDW280M15514-2 (SHOWN)
LDW280M15514-1(OPP ¢ OF SYM)
5/16
A
1 7/8
A
(ZONE 13A)
1/16 GAP MAX
MS20470AD4(16)
LDW280-15551-25
LDW280-15551-19
-Z27.000
+Y27.000
.793
.773
5.530
5.520
(SEE NOTE #6)
+Y54.000
5.366-5.376 (SHOWN SEE NOTE #7)
5.520-5.530 (OPP ¢ OF SYM
SEE NOTE #6)
B1 LDW280M15554-3 (SHOWN)
LDW280M15554-4 (OPP ¢ OF SYM)
J (ZONE 11C)
MS20470AD4(12)
MS20470AD4
LDW280-15551-23
LDW280-15549-13
NAS1097AD4
CSK F S IN
LDW280-15549-13
5/16
LDW280M1551
LDW280M1551
B
C (ZONE 2A)
.901-.921 (SHOWN)
.773-.793 (OPP ¢ OF SYM)
LDW280M15549-7 (SHOWN)
B1 LDW 280M15554-3 (OPP ¢ OF SYM)
C
MS20
LDW
LDW280
LDW28
LDW280-15516-17
MS20470AD4(6)
LDW280-15516-17

LDW280- 51902-1 ASSY

VIEW LOOKING DOWN

T NO 26512
0-51902
SHEET 3

CODE IDENT NO 26512
LDW280-51902
SHEET 3

02/03
NAS 9-1100

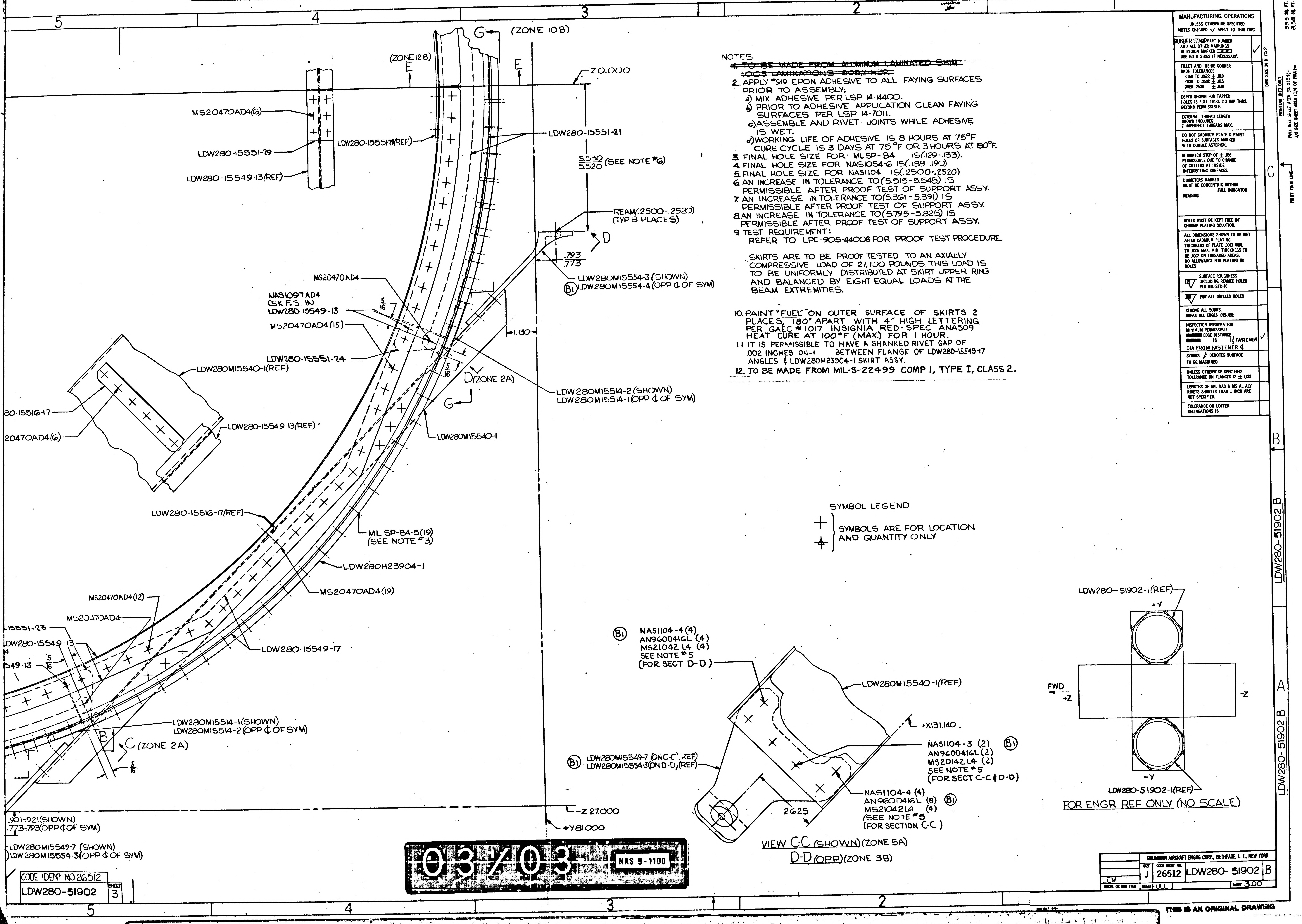
5
4
3
2
G
(ZONE 10 B)
(ZONE 12 B)
E
E
Z0.000
MS20470AD4(6)
LDW280-15551-29
LDW280-15551-29(REF)
LDW280-15549-13(REF)
LDW280-15551-21
5.530
5.520 (SEE NOTE #6)
REAM(.2500-.2520)
(TYP 8 PLACES)
D
.793
.773
LDW280M15554-3 (SHOWN)
Ⓑ1 LDW280M15554-4 (OPP ¢ OF SYM)
MS20470AD4
NAS1097AD4
CSK F.S IN
LDW280-15549-13
5/16
MS20470AD4(15)
1.130
LDW280-15551-24
5/16
D (ZONE 2A)
G
LDW280M15514-2 (SHOWN)
LDW280M15514-1(OPP ¢ OF SYM)
LDW280M15540-1(REF)
80-15516-17
20470AD4(6)
LDW280-15549-13(REF)
LDW280M15540-1
LDW280-15516-17(REF)
ML SP-B4-5(19)
(SEE NOTE #3)
LDW280H23904-1
MS20470AD4(19)
MS20470AD4(12)
MS20470AD4
15551-23
LDW280-15549-13
549-13
5/16
LDW280-15549-17
LDW280M15514-1(SHOWN)
LDW280M15514-2 (OPP ¢ OF SYM)
B
C (ZONE 2A)
Z 27.000
+Y81.000
.901-.921(SHOWN)
.773-.793(OPP ¢ OF SYM)
LDW280M15549-7 (SHOWN)
LDW 280M15554-3(OPP ¢ OF SYM)
Ⓑ1 NAS1104-4 (4)
AN960D416L (4)
MS21042 L4 (4)
SEE NOTE #5
(FOR SECT D-D)
LDW280M15540-1(REF)
+X131.140
NAS1104-3 (2) Ⓑ1
AN960D416L (2)
MS20142 L4 (2)
SEE NOTE #5
(FOR SECT C-C ¢ D-D)
Ⓑ1 LDW280M15549-7 (ON C-C) (REF)
LDW280M15554-3(ON D-D) (REF)
2.625
NAS1104-4 (4)
AN960D416L (8) Ⓑ1
MS21042 L4 (4)
(SEE NOTE #5
(FOR SECTION C-C)
VIEW C-C (SHOWN) (ZONE 5A)
D-D (OPP) (ZONE 3B)
LDW280-51902-1(REF)
+Y
FWD
+Z
-Z
-Y
LDW280-51902-1(REF)
FOR ENGR REF ONLY (NO SCALE)
C
B
A
LDW280-51902 B
LDW280-51902 B
DWG SIZE 34 X 132
PRINTING INFO ONLY
FULL SIZE SHEET AREA (35 X 134)=
1/2 SIZE SHEET AREA (1/4 OF FULL)=
33.5 SQ. FT.
8.38 SQ. FT.
PRINT TRIM LINE

NOTES

~~1. TO BE MADE FROM ALUMINUM LAMINATED SHIM .003 LAMINATIONS 5052-H39.~~

2. APPLY #919 EPON ADHESIVE TO ALL FAYING SURFACES PRIOR TO ASSEMBLY;
   - a) MIX ADHESIVE PER LSP 14-14400.
   - b) PRIOR TO ADHESIVE APPLICATION CLEAN FAYING SURFACES PER LSP 14-7011.
   - c) ASSEMBLE AND RIVET JOINTS WHILE ADHESIVE IS WET.
   - d) WORKING LIFE OF ADHESIVE IS 8 HOURS AT 75°F CURE CYCLE IS 3 DAYS AT 75°F OR 3 HOURS AT 180°F.
3. FINAL HOLE SIZE FOR MLSP-B4 IS (.129-.133).
4. FINAL HOLE SIZE FOR NAS1054-6 IS (.188-.190).
5. FINAL HOLE SIZE FOR NAS1104 IS (.2500-.2520)
6. AN INCREASE IN TOLERANCE TO (5.515-5.545) IS PERMISSIBLE AFTER PROOF TEST OF SUPPORT ASSY.
7. AN INCREASE IN TOLERANCE TO (5.361-5.391) IS PERMISSIBLE AFTER PROOF TEST OF SUPPORT ASSY.
8. AN INCREASE IN TOLERANCE TO (5.795-5.825) IS PERMISSIBLE AFTER PROOF TEST OF SUPPORT ASSY.
9. TEST REQUIREMENT:
   REFER TO LPC-905-44006 FOR PROOF TEST PROCEDURE.

   SKIRTS ARE TO BE PROOF TESTED TO AN AXIALLY COMPRESSIVE LOAD OF 21,100 POUNDS. THIS LOAD IS TO BE UNIFORMLY DISTRIBUTED AT SKIRT UPPER RING AND BALANCED BY EIGHT EQUAL LOADS AT THE BEAM EXTREMITIES.

10. PAINT "FUEL" ON OUTER SURFACE OF SKIRTS 2 PLACES, 180° APART WITH 4" HIGH LETTERING PER GAEC #1017 INSIGNIA RED-SPEC ANA509 HEAT CURE AT 100°F (MAX.) FOR 1 HOUR.
11. IT IS PERMISSIBLE TO HAVE A SHANKED RIVET GAP OF .002 INCHES ON-1 BETWEEN FLANGE OF LDW280-15549-17 ANGLES & LDW280H23904-1 SKIRT ASSY.
12. TO BE MADE FROM MIL-S-22499 COMP I, TYPE I, CLASS 2.

SYMBOL LEGEND

+ ╡ SYMBOLS ARE FOR LOCATION AND QUANTITY ONLY

MANUFACTURING OPERATIONS
UNLESS OTHERWISE SPECIFIED
NOTES CHECKED ✓ APPLY TO THIS DWG.

RUBBER STAMP PART NUMBER AND ALL OTHER MARKINGS IN REGION MARKED ⊠ USE BOTH SIDES IF NECESSARY.	✓
FILLET AND INSIDE CORNER RADII TOLERANCES .016R TO .062R ± .010 .063R TO .250R ± .015 OVER .250R ± .030	
DEPTH SHOWN FOR TAPPED HOLES IS FULL THDS. 2-3 IMP THDS. BEYOND PERMISSIBLE.	
EXTERNAL THREAD LENGTH SHOWN INCLUDES 2 IMPERFECT THREADS MAX.	
DO NOT CADMIUM PLATE & PAINT HOLES OR SURFACES MARKED WITH DOUBLE ASTERISK.	
MISMATCH STEP OF ± .005 PERMISSIBLE DUE TO CHANGE OF CUTTERS AT INSIDE INTERSECTING SURFACES.	
DIAMETERS MARKED MUST BE CONCENTRIC WITHIN FULL INDICATOR READING	
HOLES MUST BE KEPT FREE OF CHROME PLATING SOLUTION.	
ALL DIMENSIONS SHOWN TO BE MET AFTER CADMIUM PLATING. THICKNESS OF PLATE .0003 MIN. TO .0005 MAX. MIN. THICKNESS TO BE .0002 ON THREADED AREAS. NO ALLOWANCE FOR PLATING IN HOLES	
125 SURFACE ROUGHNESS INCLUDING REAMED HOLES PER MIL-STD-10	
200 FOR ALL DRILLED HOLES	
REMOVE ALL BURRS. BREAK ALL EDGES .015-.031	
INSPECTION INFORMATION MINIMUM PERMISSIBLE EDGE DISTANCE IS 1½ FASTENER DIA FROM FASTENER ¢	✓
SYMBOL ✓ DENOTES SURFACE TO BE MACHINED	
UNLESS OTHERWISE SPECIFIED TOLERANCE ON FLANGES IS ± 1/32	
LENGTHS OF AN, NAS & MS AL ALY RIVETS SHORTER THAN 1 INCH ARE NOT SPECIFIED.	
TOLERANCE ON LOFTED DELINEATIONS IS	

GRUMMAN AIRCRAFT ENGRG CORP., BETHPAGE, L. I., NEW YORK

SIZE	CODE IDENT NO.		
J	26512	LDW280- 51902	B
LEM	MODEL OR END ITEM	SCALE FULL	SHEET 3.00

CODE IDENT NO 26512
LDW280-51902 SHEET 3

03/03 NAS 9-1100

THIS IS AN ORIGINAL DRAWING

LDW280-51950 B

MODEL OR END ITEM	NEXT ASSY	MODULE OR SER NO.	REQD PER MODULE OR END ITEM
LEM	LDW280-52002	LEM-2(32)	1
LEM	LDW280-51002	LEM-1(31)	1
PART NO. LDW280-51950-3		GAEC SCH NO.	

MODEL OR END ITEM	NEXT ASSY	MODULE OR SER NO.	REQD PER MODULE OR END ITEM
LEM	LDW280-51002	LEM-1(31)	1
PART NO. LDW280-51950-5		GAEC SCH NO. 31-1	

MODEL OR END ITEM	NEXT ASSY	MODULE OR SER NO.	REQD PER MODULE OR END ITEM
LEM	LDW280-52002	LEM-2(32)	1
PART NO. LDW280-51950-1		GAEC SCH NO. 31-1	

5

SH REV STATUS: FOR DESCRIPTION OF REV SEE SUBQ SH

SHEET	1.00	1.10	2.00	3.00					
REV	B	B	B	B					
SHEET									
REV									
SHEET									
REV									

LAST SECT LTR USED	L	GRUMMAN REL INFO		
LAST DASH NO. USED	-5	PRIM NO.	LE(001)	
		215	MP-B	8-3-6

UNLESS OTHERWISE SPECIFIED DIMENSIONS ARE IN INCHES.

TOLERANCE UNLESS SPECIFIED FRACTIONS - DECIMALS – ANGLES ±1/32 ±.032 ±1/2°

ORIG DWG AUTH

DETAIL SPEC REQUIREMENT

CLASS II ENGRG CHANGE

CLASS I ENGRG CHANGE

CONTRACT NO. NAS9-1100

LINE ITEM 1

DOCUMENTATION TYPE II

DRAWN BY	LeCun 7-18-66	RELIABILITY	
LAYOUT BY	KRAMEISEN 7-30-66		
CHECKED BY	JB 7-26-66		
GR LEADER	J. Pusateri 7/29/66		
VEH DES INT	W.R. BISCHOFF 7/29		
STRUCTURES	JV FOR	PROJ ENGR	RM Rubi (WR) 8-12
STRUCTURES	HILDERMAN	REL GROUP	Botts 8-17-66
WEIGHTS	L. Garcia 8/10/66		

GRUMMAN AIRCRAFT ENGRG CORP
BETHPAGE, L. I., NEW YORK

TANK INSTALLATION
ASCENT STAGE-PROPELLANT

SIZE	CODE IDENT NO.		
B	26512	LDW280-51950	B
SCALE NONE		SHEET 1.00 OF 4	

ENG 77.1 12-65

01

NAS 9-1100

REVISIONS FOR CONTINUATION OF REVISIONS SEE SHEET

CHANGE LTR	ITEM NO.	SHEET NO.	ZONE	GRUMMAN INFO ONLY	DET SPEC	CLASS I	CLASS II	ENGRG ORDER	DESCRIPTION	EFFECTIVITY	DISPOSITION OF EXISTING PARTS		CHANGED BY AND DATE	ENGRG APPD	GOVT APPD
											REWORK	SCRAP			
A	1	1,1.10,2,3						EO A1	INITIAL DWG RELEASE. PARTS MADE PER E O	LEM-1,-2	NOT	REQD			
	2	1.10,2,3	2A 3A					EO A2	ADDED TO -1 : LDW280M10978-1, VS2864-3H6(3), AN960D10L(3), LOCKWIRE MS20995C32		-1				
	3	1.10,2,3	3C					EO A3	ON-1 & -5 ONLY REMOVED AN960C1216(1). ADDED LDW28M-10985-1		-1,-3,-5				
	4	1.10,2,3	2A 3A 7B					EO A4	ADDED TO -1 & -5 : LDW360-51288-1(1), LDW270-51402-3(1) ADDED TO -3: LDW360-51288-3(1), LDW270-51402-1(1), LDW280-23249-1(1), NAS676V12(1), GB10G-6-4(1), AN960C616L(2) & MS21043-6(1)						
	5							EO A5	SUPERSEDED BY EO A6	NOT REQD	NOT	REQD			
	6	1.10,2,3	2A 7B					EO A6	SUPERSEDES EO A5. ADDED LDW270-51402-5 & -7 INSTLS ON INTERIM BASIS, ADDED NOTE 5	LEM-1	NOT	REQD			
B	1	1.10,2,3	5C 6A					EO B1	ADDED LDW280-15017-1 TO -1,-3 & -5	LEM-1,-2	-1,-3,-5		LeCun 7/18/66		8-20-66
	2	1.10,2,3	3C 8C					EO B2	ON-1 & -5 INSTL REMOVED LDW280M10985-1 ON-3 INSTL REMOVED AN960C1216						
	3	1.10,2,3							REF EO A2 ADDED TO -1 & -5 WAS -1	NOT REQD	NOT	REQD			
	4	1.10,2,3		Ⓟ					REF EO A4 LDW360-51288-3 WAS -1 & LDW360-51288-1 WAS -3				J.B.		

CHG APPROVED	LTR	GROUP LDR	VEH DES INT	STRUCTURES	STRUCTURES	WEIGHTS	RELIABILITY
	B						

GRUMMAN AIRCRAFT ENGRG CORP., BETHPAGE, L. I., NEW YORK

SIZE	CODE IDENT NO.		
B	26512	LDW280-51950	B
SCALE NONE		SHEET 1.10	

ENG 77.16 3-66

01

NAS 9-1100

QTY PER ASSEMBLY							CODE IDENT	PART NO.	I&T	NOMENCLATURE OR DESCRIPTION	MATERIAL	GOVT SPEC	COML SPEC	STOCK SIZE	PROCESS SYM	FINISH NO.	ZONE
				-5	-3	-1											
				3		3	92215	VS2864-3H6	E	BOLT							
				1	1	1		NAS676V17		BOLT	STD PART						
					1			NAS676V12		BOLT							
				1	2	1		MS21043-6		NUT							
								MS20995C32		LOCKWIRE							
				2	4	2		AN960C616L		WASHER							
				3		3		AN960D10L		WASHER	STD PART						
					1			GB10G-6-4		BUSHING	GRUMMAN STD						
				1		1		LDW280M10978-1		MOUNT	SEE DWG						3A
				1	1	1		LDW280-15017-1		BRACKET INSTL							5C
				1		1		LDW360-51288-3		TRANSDUCER INSTL							3A
					1			LDW360-51288-1		TRANSDUCER INSTL							7B
					1			LDW280-23249-1		STRUT ASSY							6A
				1		1		LDW270-51402-7		LEVEL DET INSTL		SEE NOTE 5					2A
					1			-5									7B
				1		1		-3									2A
					1			LDW270-51402-1		LEVEL DET INSTL		SEE NOTE 5					7B
				1				LSC280-7-56-1		TANK ASSY							3A
						1		LSC280-7-56		TANK ASSY							3A
					1			LSC280-7-55		TANK ASSY	SEE DWG						5B
								LDW280-51950-5		OXIDIZER TANK INSTL					NONE	NONE	4A
								LDW280-51950-3		FUEL TANK INSTL					NONE	NONE	4A
								LDW280-51950-1	E	OXIDIZER TANK INSTL					NONE	NONE	4A

SYM OR NO.	PROCESS OR FINISH	GRUMMAN SPEC OR MILITARY SPEC	SYM OR NO.	PROCESS OR FINISH	GRUMMAN SPEC OR MILITARY SPEC	SYM OR NO.	PROCESS OR FINISH	GRUMMAN SPEC OR MILITARY SPEC

I & T: IDENTIFICATION AND TRACEABILITY IN ACCORDANCE WITH :
NONE

GRUMMAN AIRCRAFT ENGRG CORP, BETHPAGE, L. I., NEW YORK

SIZE	CODE IDENT NO.		
B	26512	LDW280-51950	B
SCALE NONE		SHEET 2.00	

ENG 77.2 7-65

01

NAS 9-1100

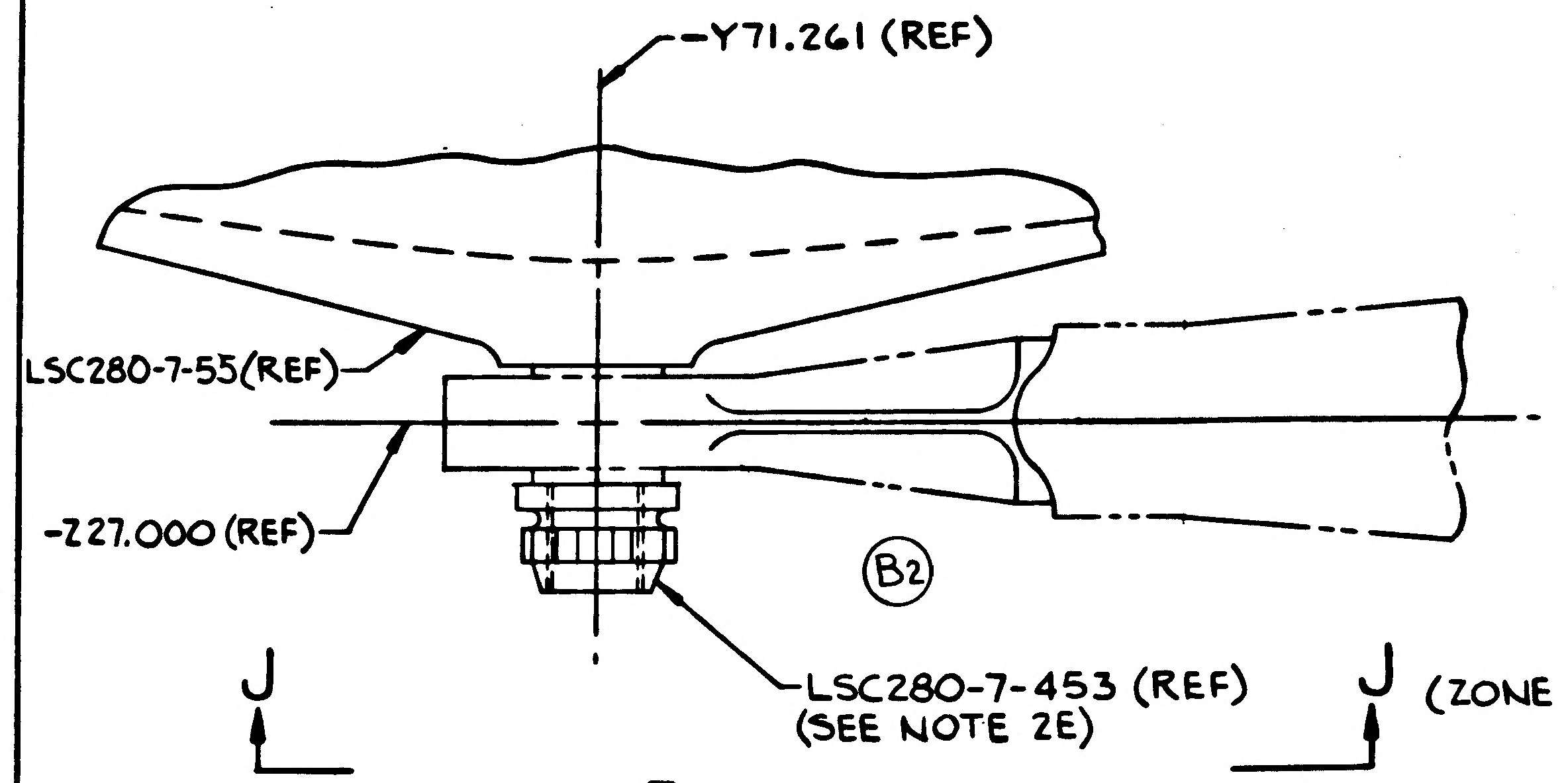
-Y71.261 (REF)
LSC280-7-53(REF)
-Z27.000 (REF)
B2
LSC280-7-453 (REF)
(SEE NOTE 2E)
J
J (ZONE 8B)

DETAIL F
(ZONE 5A)

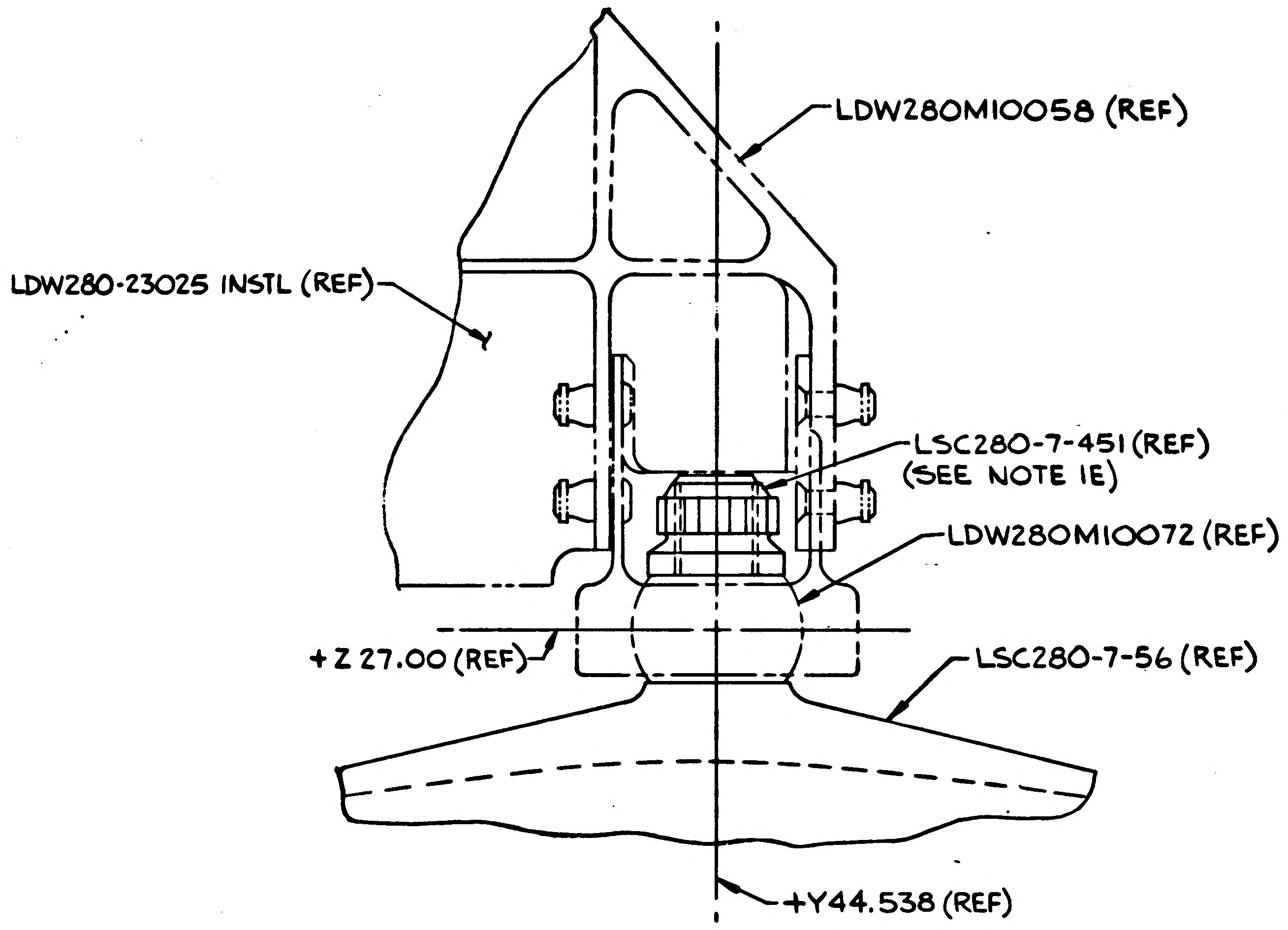
LDW280M10058 (REF)
LDW280-23025 INSTL (REF)
LSC280-7-451 (REF)
(SEE NOTE 1E)
LDW280M10072 (REF)
+Z 27.00 (REF)
LSC280-7-56 (REF)
+Y44.538 (REF)

DETAIL A
(ZONE 3A)

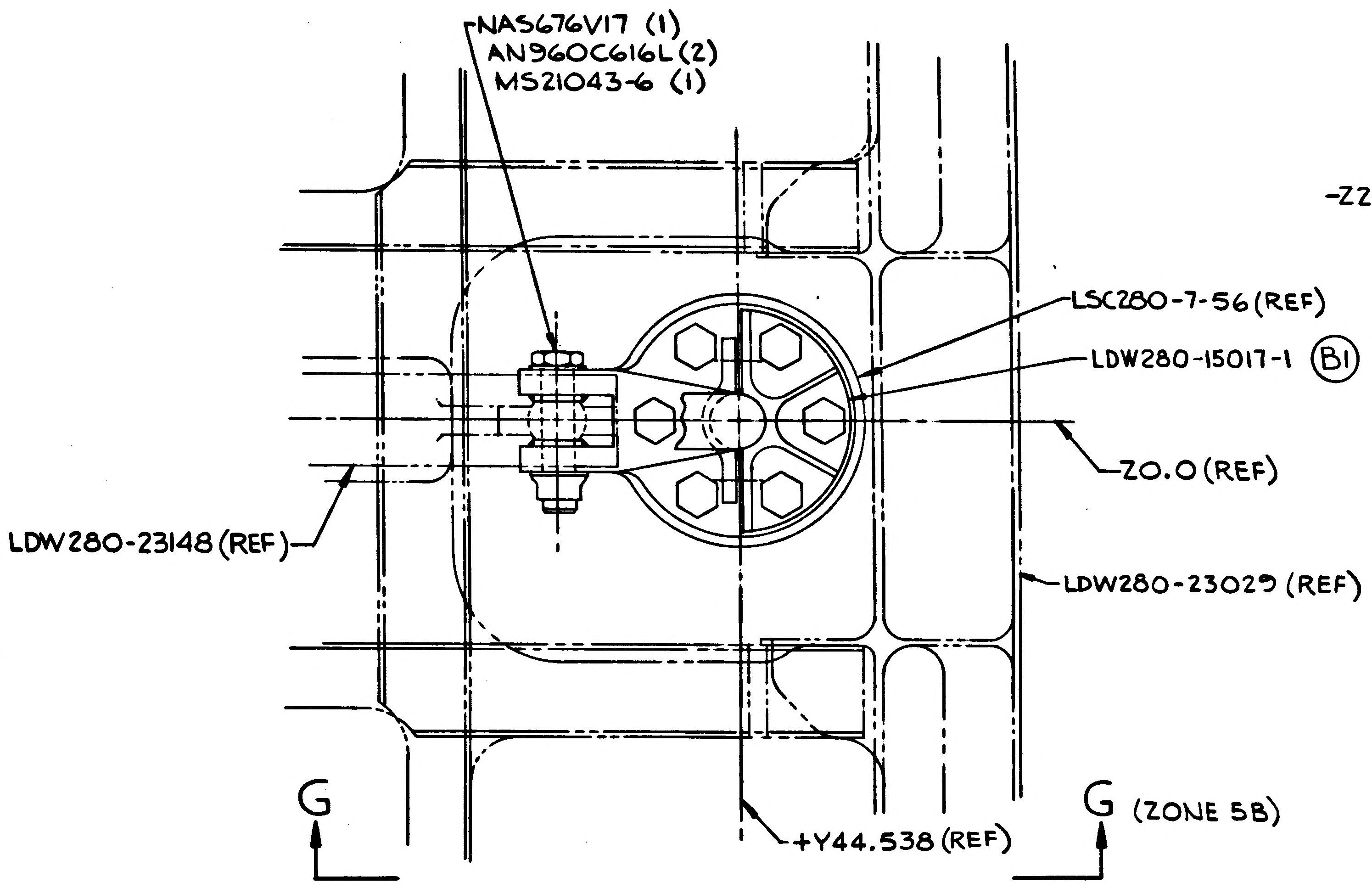
NAS676V17 (1)
AN960C616L (2)
MS21043-6 (1)
LSC280-7-56 (REF)
LDW280-15017-1 B1
Z0.0 (REF)
LDW280-23148 (REF)
LDW280-23029 (REF)
G
G (ZONE 5B)
+Y44.538 (REF)

DETAIL B
(ZONE 3A)

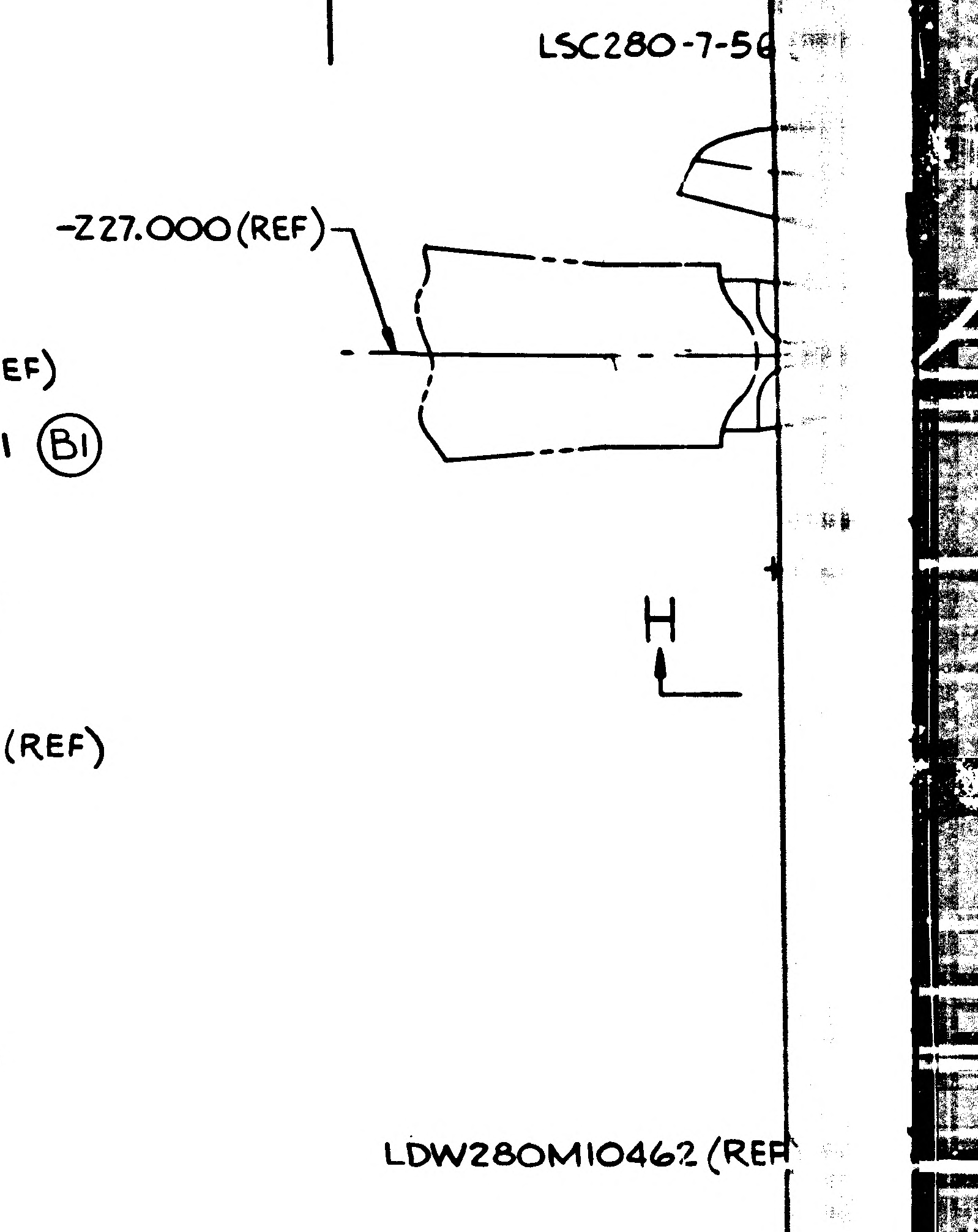
LSC280-7-56
-Z27.000 (REF)
H
LDW280M10462 (REF

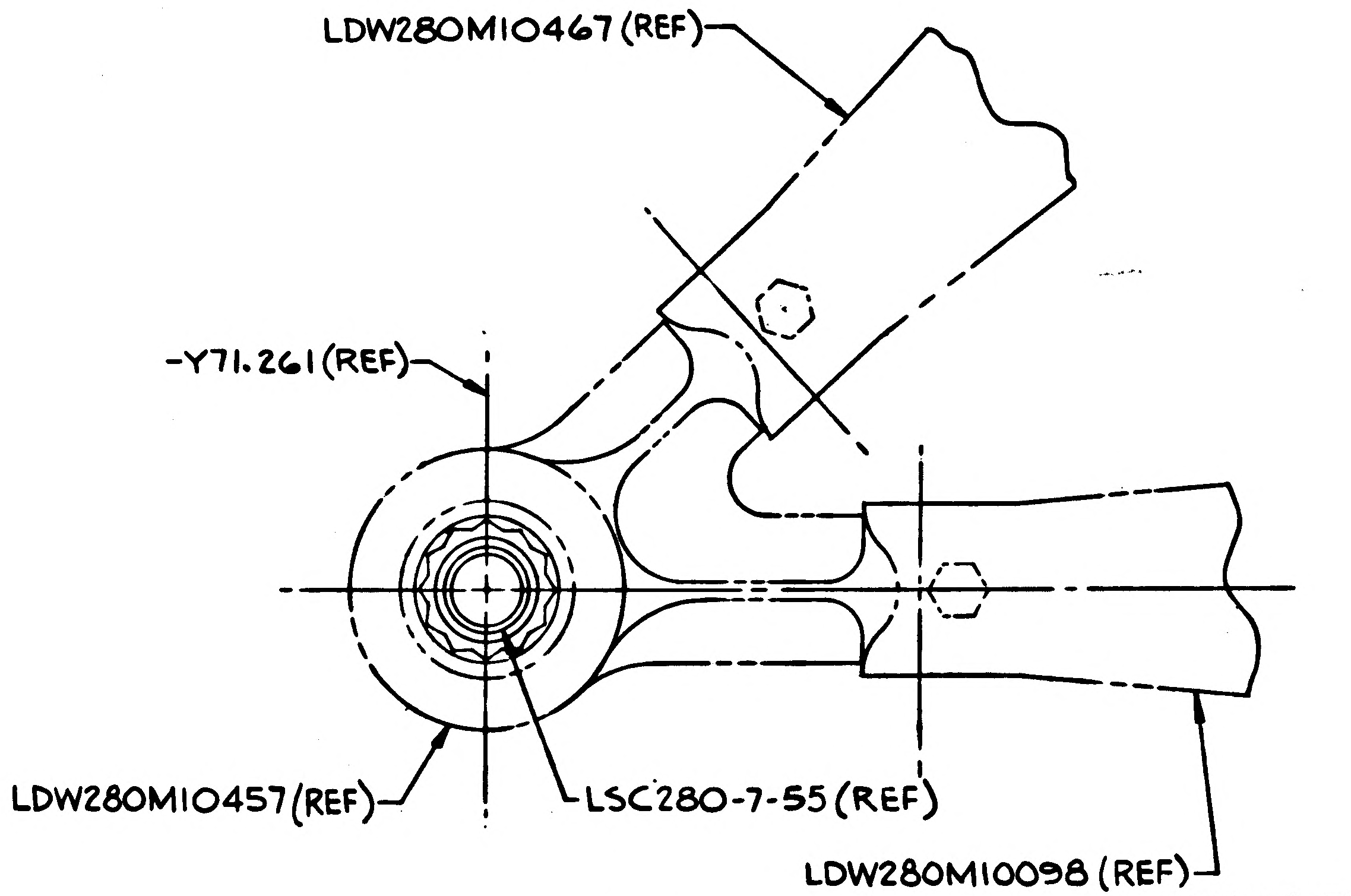
LDW280M10467 (REF)
-Y71.261 (REF)
LDW280M10457 (REF)
LSC280-7-55 (REF)
LDW280M10098 (REF)

VIEW J-J
(ZONE 8C)

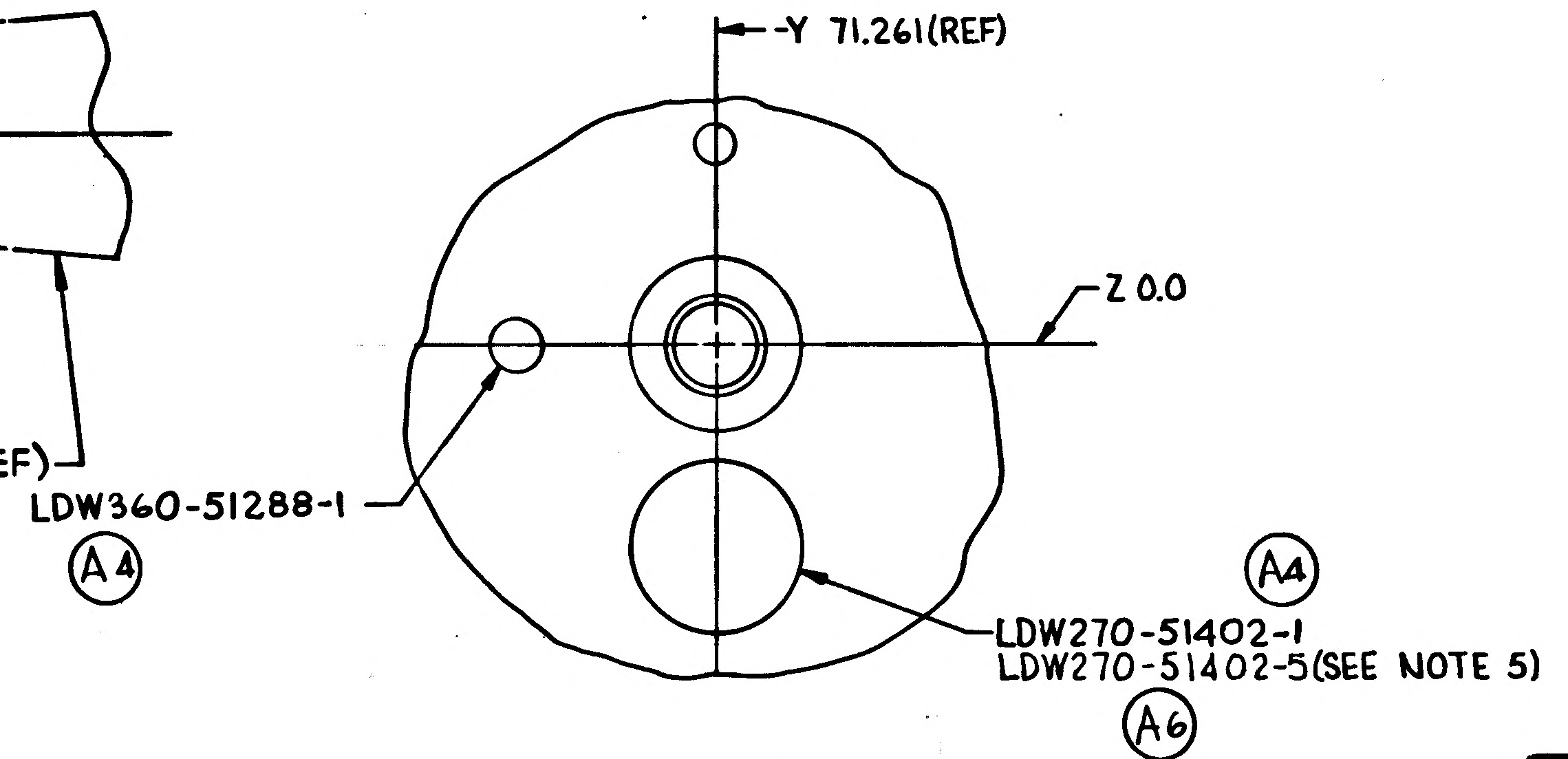
-Y 71.261 (REF)
Z 0.0
LDW360-51288-1
A4
A4
LDW270-51402-1
LDW270-51402-5 (SEE NOTE 5)
A6

DETAIL L (ZONE 5A)
VIEW LOOKING UP
HALF SIZE

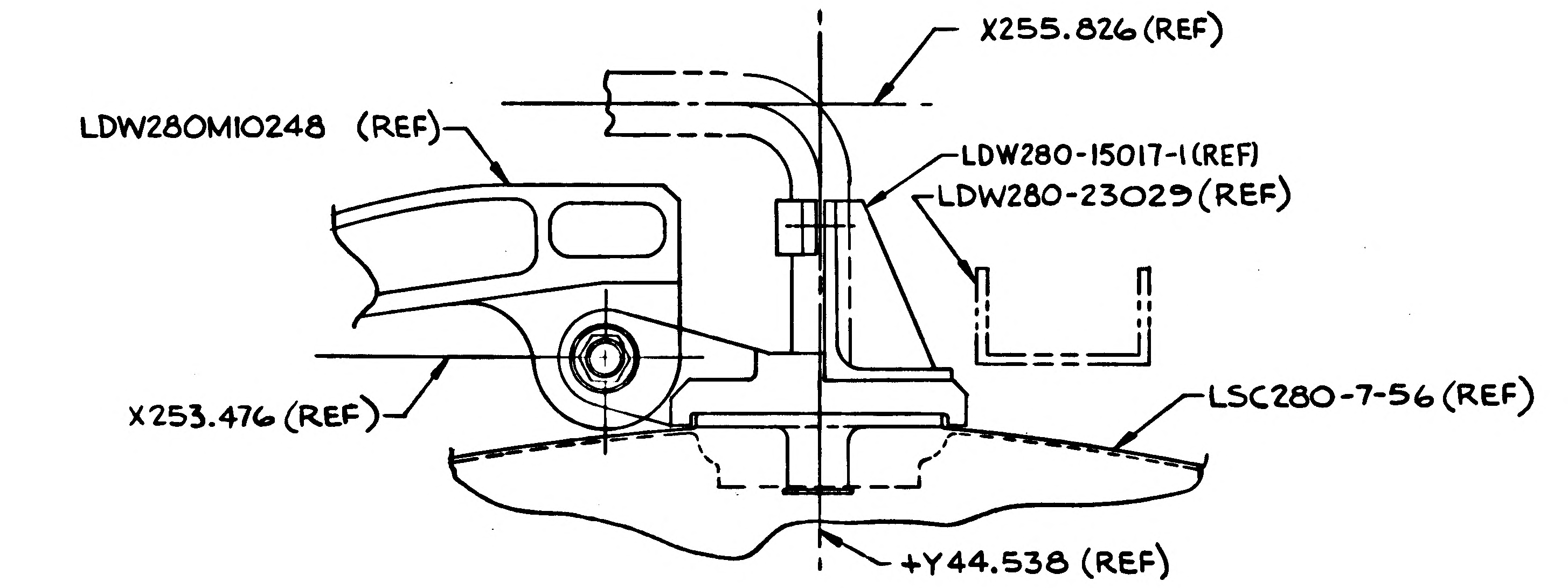
X255.826 (REF)
LDW280M10248 (REF)
LDW280-15017-1 (REF)
LDW280-23029 (REF)
X253.476 (REF)
LSC280-7-56 (REF)
+Y44.538 (REF)

VIEW G-G
(ZONE 5C)

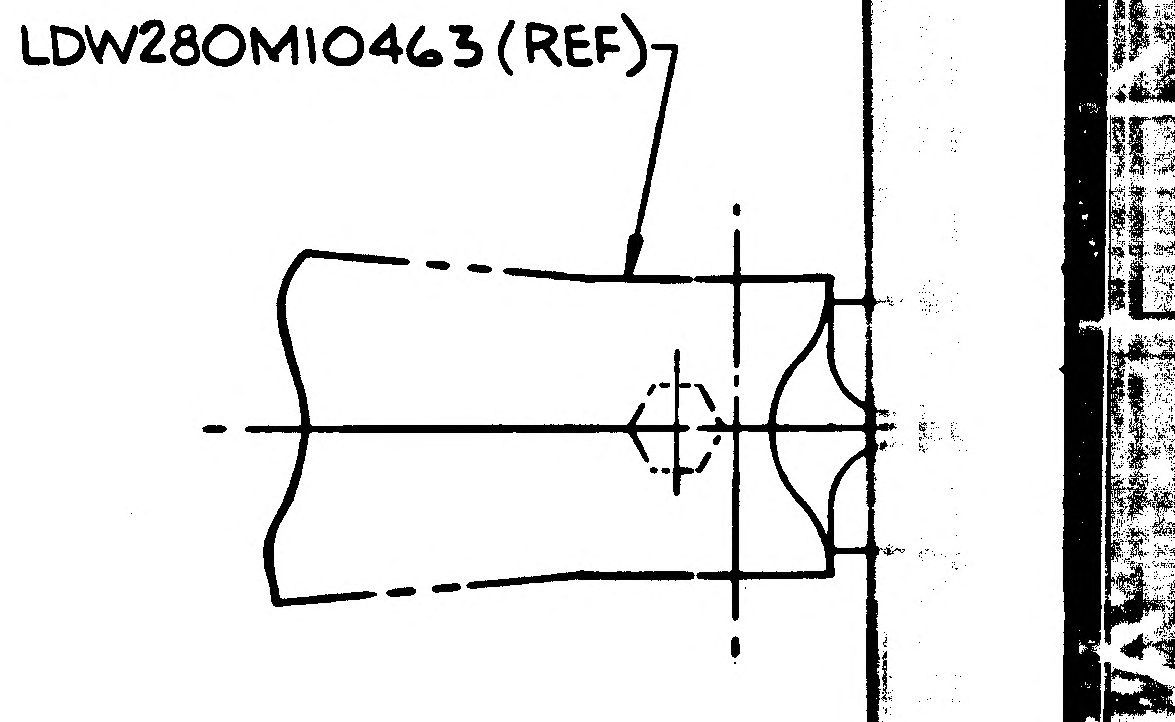
LDW280M10463 (REF)

01702 NAS 9-1100

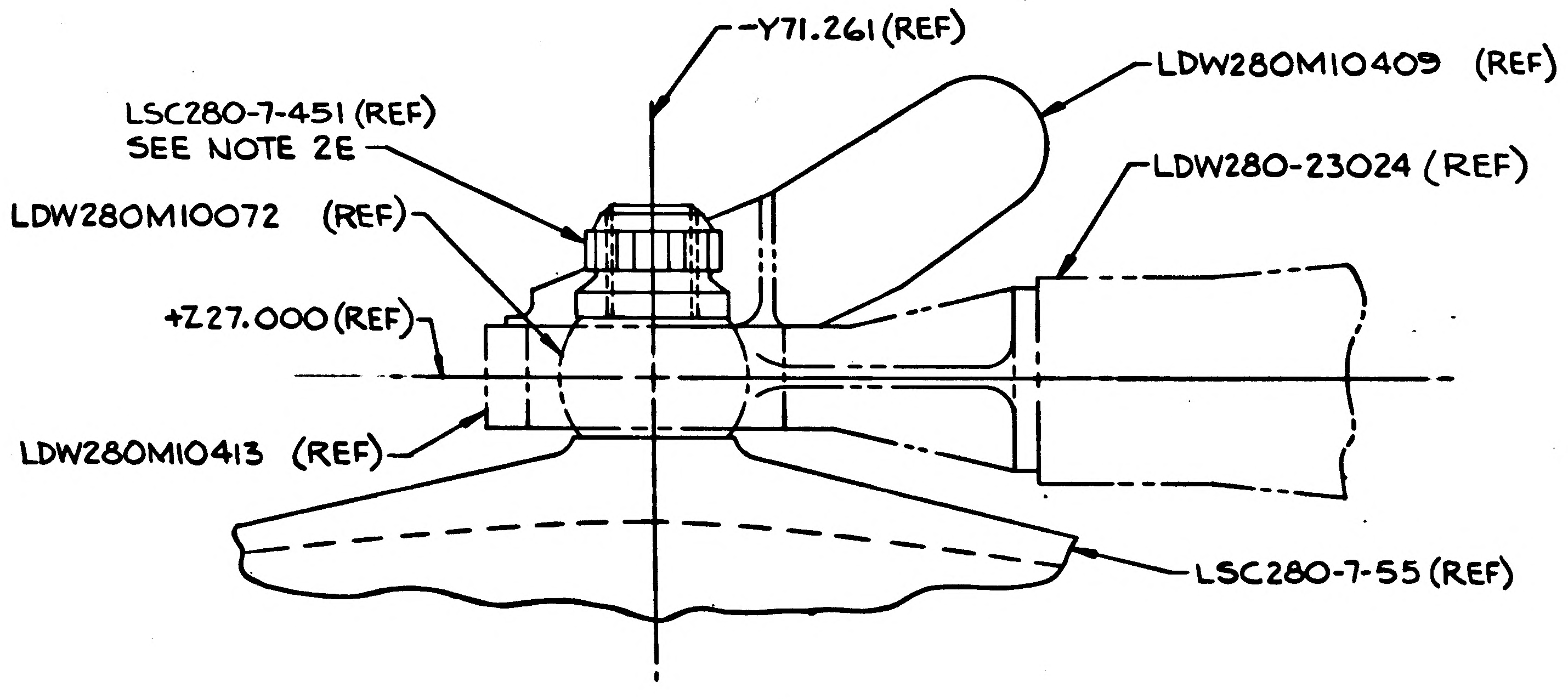
-Y71.261 (REF)
LDW280M10409 (REF)
LSC280-7-451 (REF)
SEE NOTE 2E
LDW280-23024 (REF)
LDW280M10072 (REF)
+Z27.000 (REF)
LDW280M10413 (REF)
LSC280-7-55 (REF)

DETAIL D
(ZONE 4A)

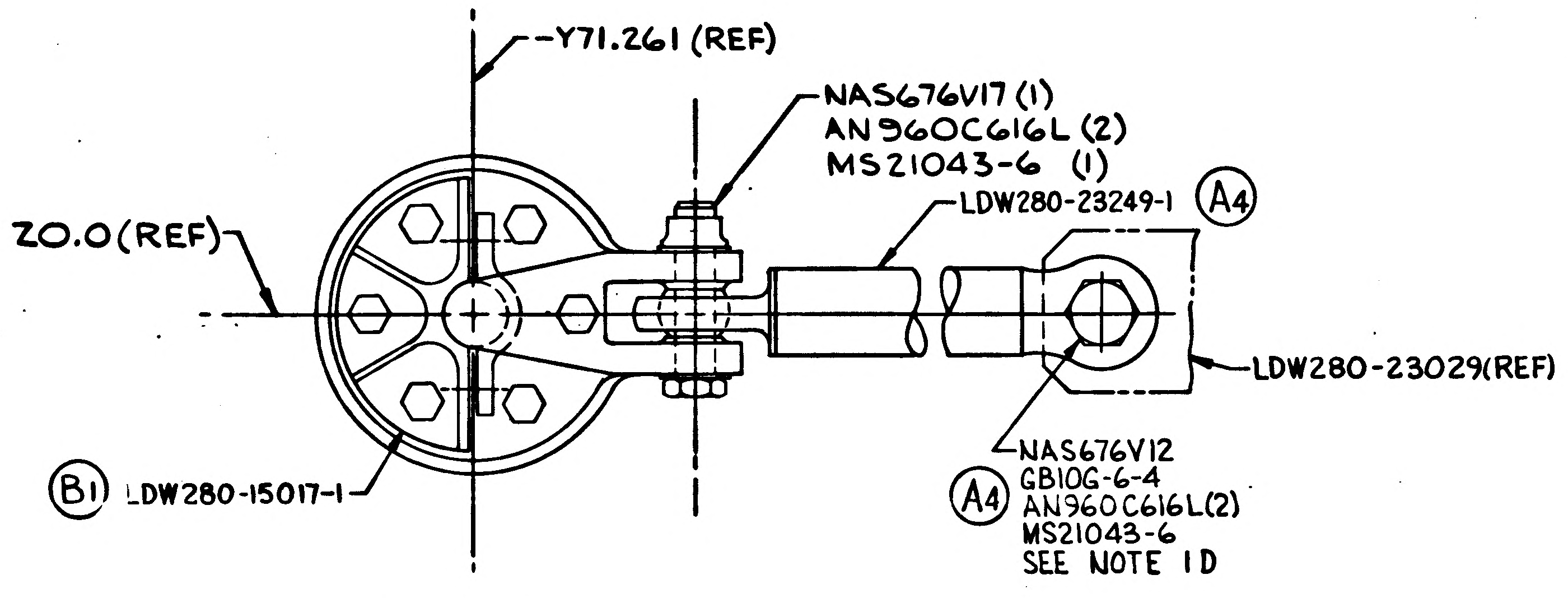
-Y71.261 (REF)
NAS676V17 (1)
AN960C616L (2)
MS21043-6 (1)
LDW280-23249-1 A4
Z0.0 (REF)
LDW280-23029 (REF)
B1 LDW280-15017-1
A4 NAS676V12
GB10G-6-4
AN960C616L (2)
MS21043-6
SEE NOTE 1D

DETAIL E
(ZONE 5A)

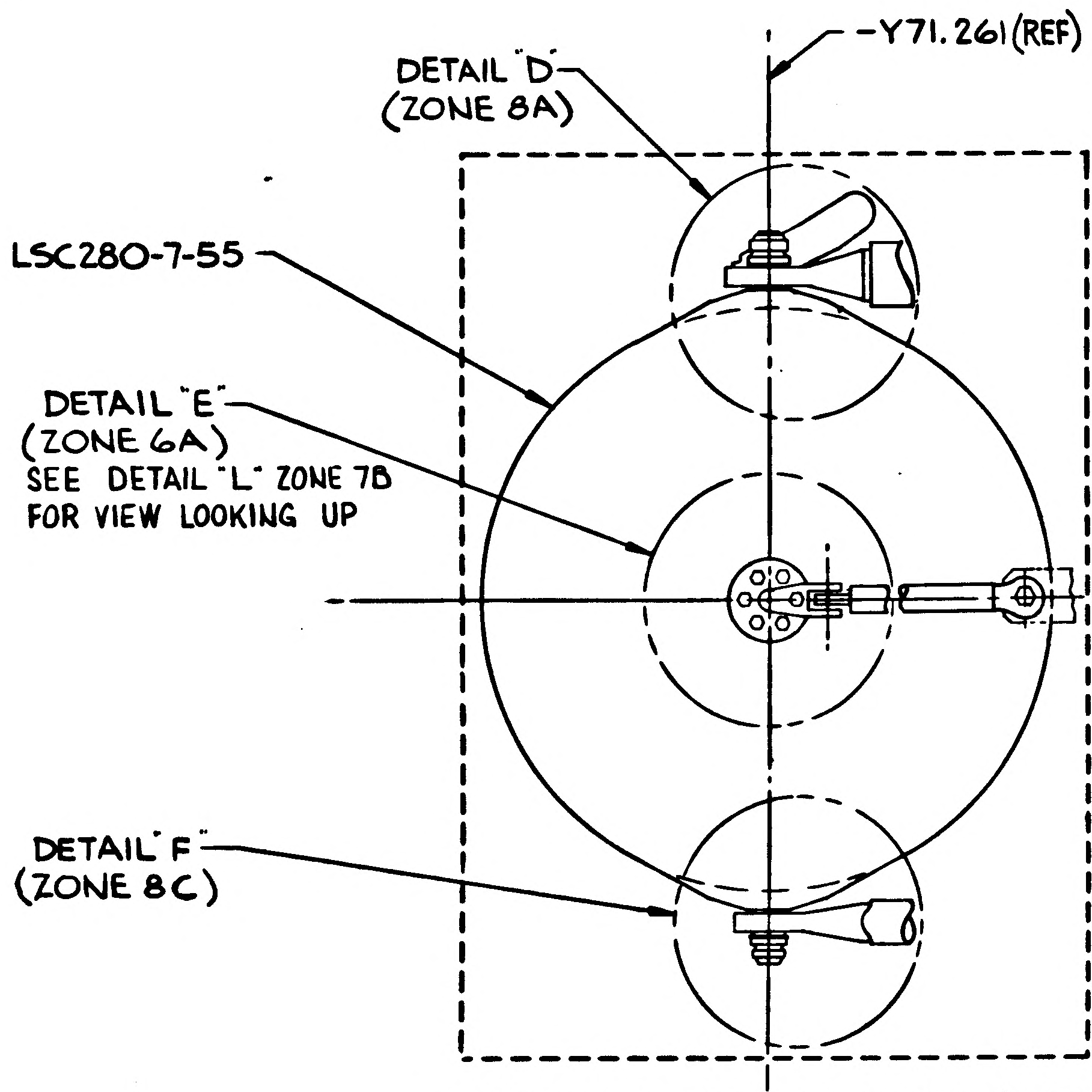
-Y71.261 (REF)
DETAIL "D"
(ZONE 8A)
LSC280-7-55
DETAIL "E"
(ZONE 6A)
SEE DETAIL "L" ZONE 7B
FOR VIEW LOOKING UP
Z0.0
DETAIL "F"
(ZONE 8C)

LDW280-51950-3 INSTL (FUEL TANK)
VEIW LOOKING DOWN
(NO SCALE)

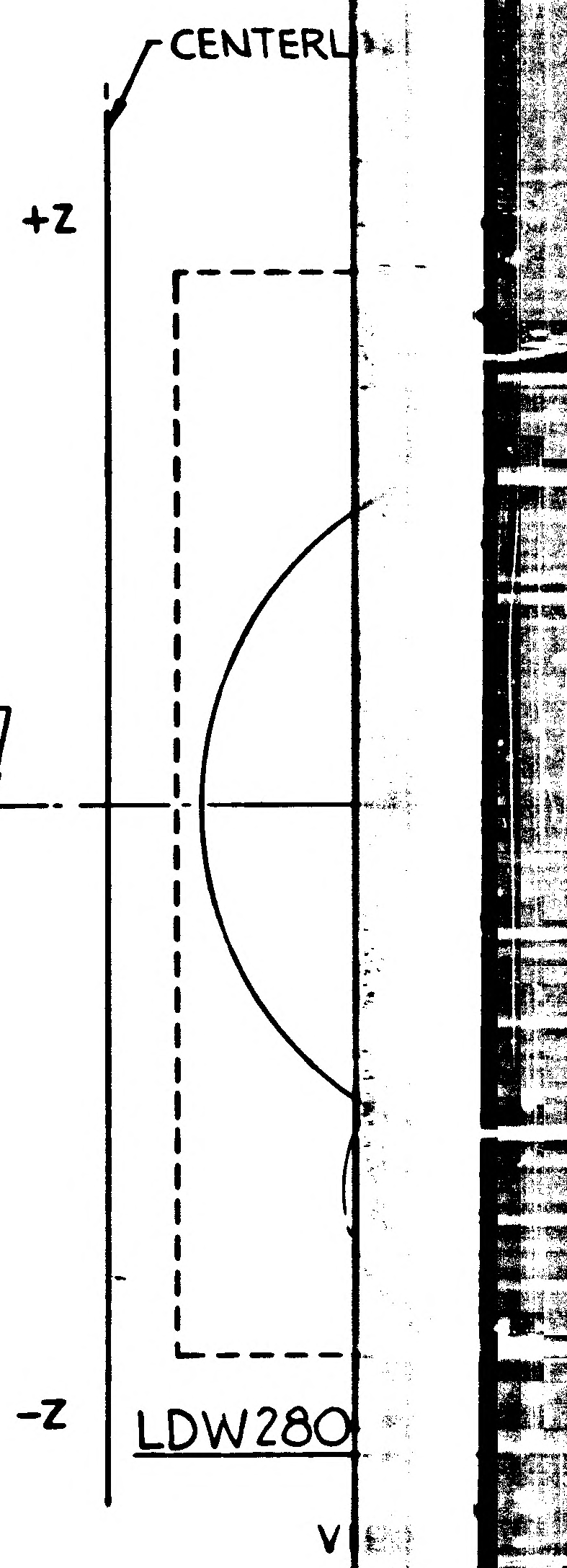
CENTERL
+Z
-Z
LDW280
V

2/2

CODE IDENT NO. 26512
LDW280-51950 SH 3

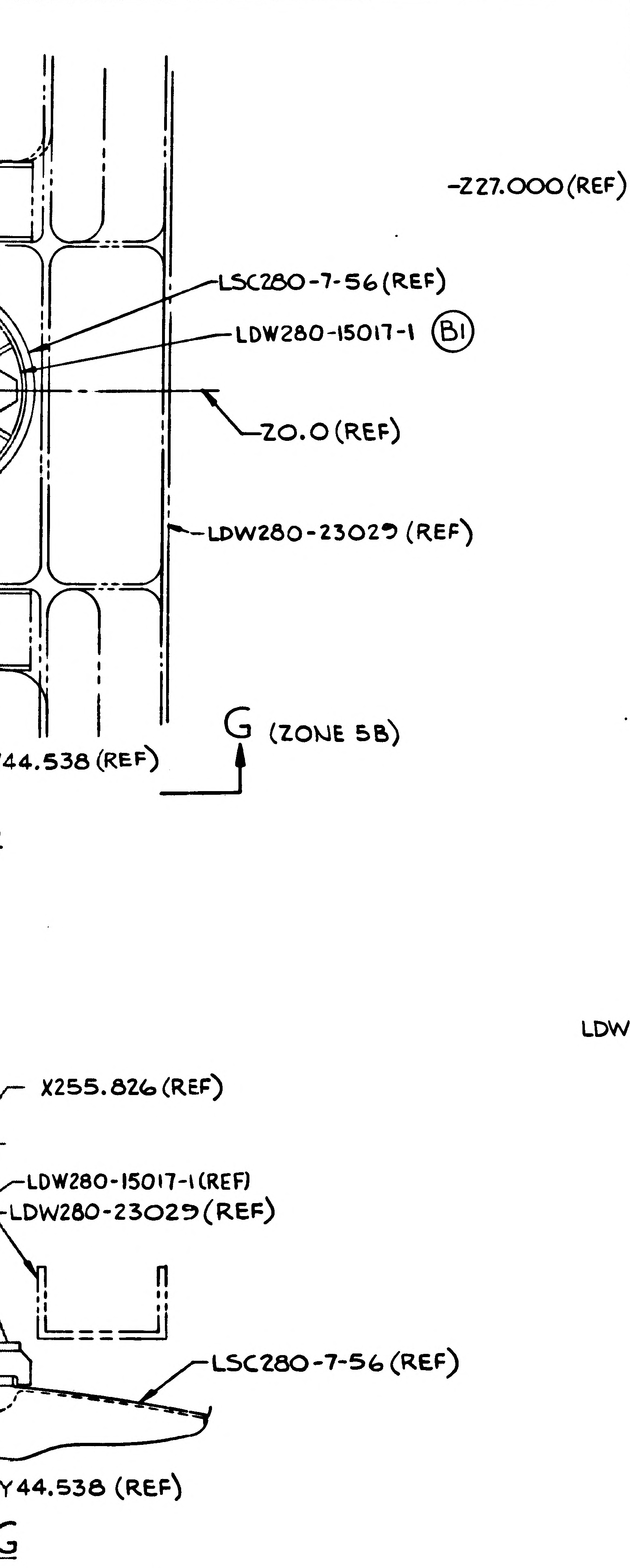
-Z27.000(REF)
LSC280-7-56(REF)
LDW280-15017-1 (B1)
Z0.0 (REF)
LDW280-23029 (REF)
G (ZONE 5B)
44.538 (REF)
X255.826 (REF)
LDW280-15017-1(REF)
LDW280-23029(REF)
LSC280-7-56 (REF)
Y44.538 (REF)
G

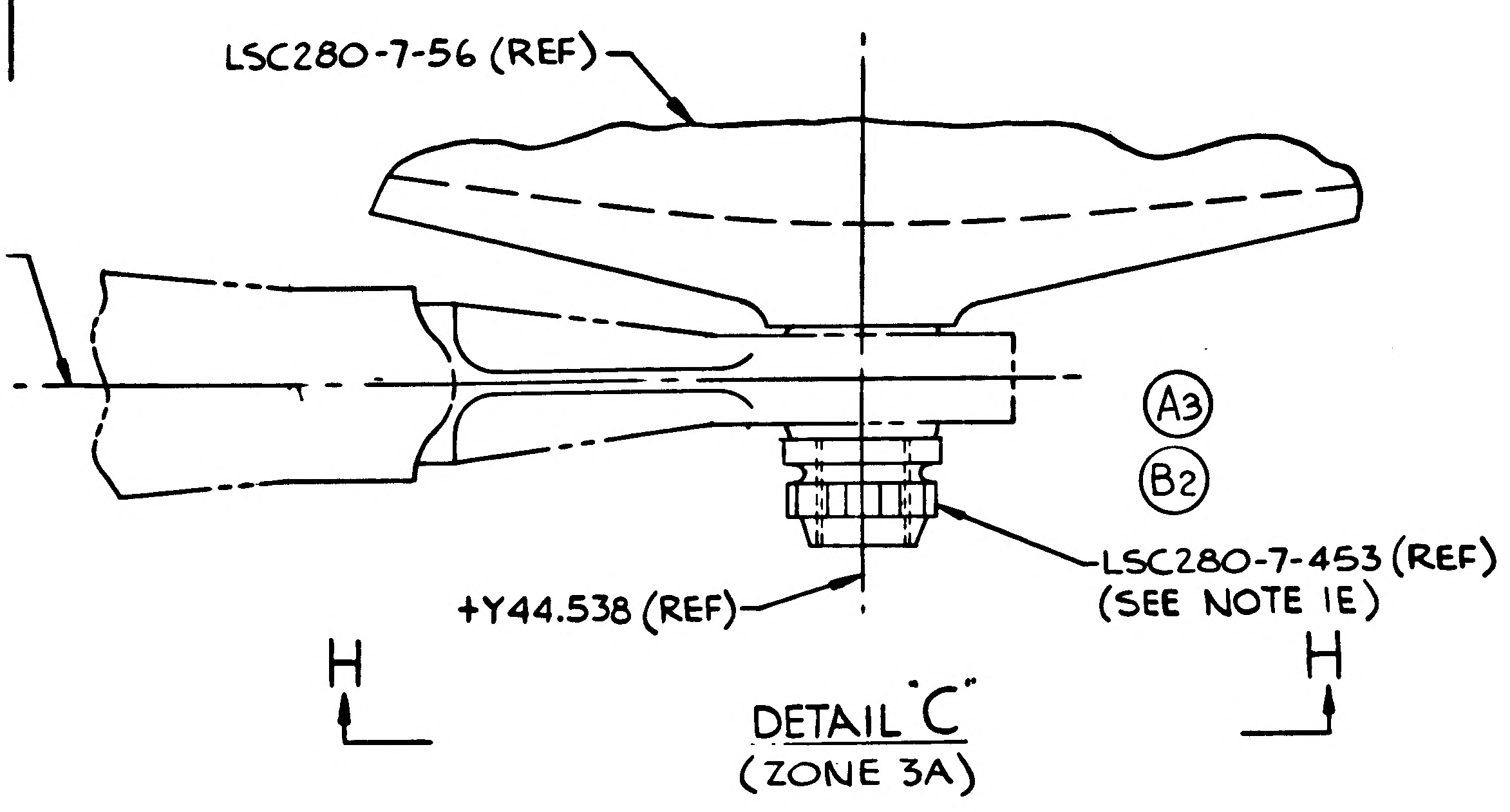
LSC280-7-56 (REF)
-Z27.000(REF)
(A3)
(B2)
LSC280-7-453 (REF)
(SEE NOTE 1E)
+Y44.538 (REF)
H
H

DETAIL C
(ZONE 3A)

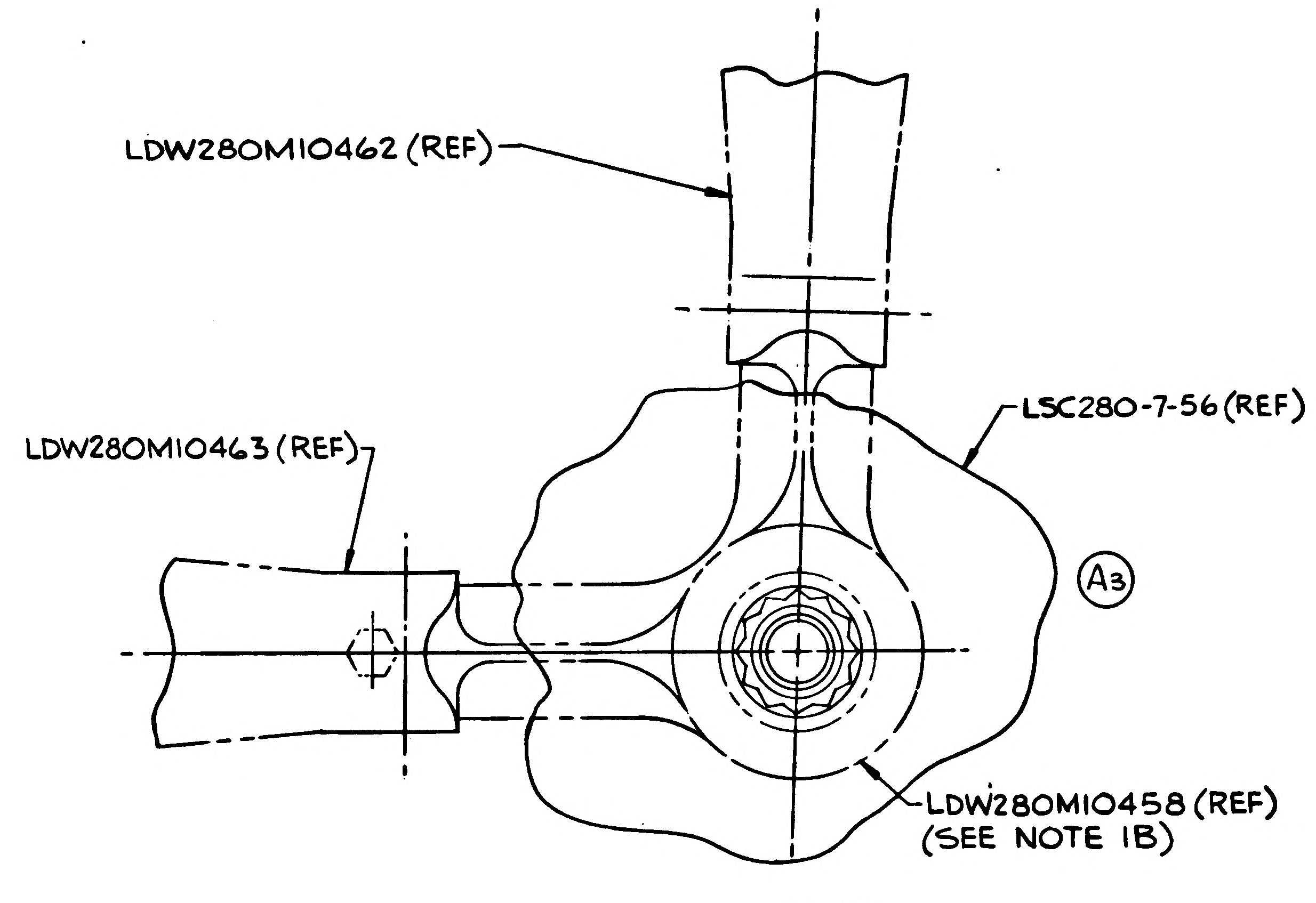
LDW280M10462 (REF)
LDW280M10463 (REF)
LSC280-7-56(REF)
(A3)
LDW280M10458 (REF)
(SEE NOTE 1B)

VIEW H-H
(ZONE 3C)

NOTES:

1. -1(OXIDIZER TANK) INSTALLATION PROCEDURE TO BE AS FOLLOWS:
   - A. REMOVE FITTING ASSY LDW280M10458 FROM AFT STRUT LDW280M10463.
   - B. WITH FORWARD SPHERICAL BEARING FACING SLIGHTLY OUTBOARD AND DOWNWARD, PARTIALLY INSERT 1" STUD ON FORWARD CONE OF TANK ASSY (LSC280-7-54) INTO BEARING, ALLOWING ROOM TO START LSC280-7-451 NUT ON THREADS. TIGHTEN NUT UNTIL TANK CONE IS FULLY SEATED AGAINST BEARING FACE.
   - C. PLACE AFT BEARING IN FITTING ASSY LDW280M10458 OVER 7/8 STUD ON TANK ASSY AND SECURE WITH NUT LSC280-7-453 TIGHTEN LIGHTLY. SWING TANK ASSY INBOARD AND UP PIVOTING ON FORWARD BEARING, MAKE SURE HELIUM TUBE ELBOW ON TOP OF TANK ASSY CLEARS THRU CUTOUT IN DECK ASSY LDW280-23029. RE-INSTALL FITTING ASSY INTO AFT TRUSS AS SHOWN IN VIEW H-H.
   - D INSTALL MID-SECTION STRUT ASSY LDW280-23148 TO HELIUM PORT FITTING AS SHOWN IN DETAIL "B" APPLY 170 ±10 IN.-LBS TORQUE TO THE BOLT (NAS676V17)
   - E. TORQUE THE FORWARD NUT (LSC280-7-451) TO 350 - 375 FT.-LBS. AND THE AFT NUT (LSC280-7-453) TO 140- 160 FT.-LBS.
   - F. TANK MUST BE ADEQUATELY SUPPORTED DURING INSTALLATION.
2. -3 (FUEL TANK) INSTALLATION PROCEDURE TO BE AS FOLLOWS:
   - A. REMOVE FITTING ASSY LDW280M10457 FROM AFT STRUT LDW280M10098.
   - B. WITH FORWARD BEARING FACING SLIGHTLY OUTBOARD INSERT STUD ON TANK ASSY INTO BEARING AND SECURE WITH LSC280-7-451 NUT. RUN NUT LIGHTLY AGAINST BEARING.
   - C. PLACE AFT BEARING ASSY LDW280M10457 OVER 7/8 STUD ON TANK ASSY AND SECURE WITH NUT (LSC280-7-453). TIGHTEN LIGHTLY. SWING TANK ASSY INBOARD PIVOTING ON FORWARD BEARING. RE-INSTALL FITTING INTO AFT TRUSS AS SHOWN IN VIEW J-J.
   - D. INSTALL MID-SECTION STRUT ASSY LDW280-23245 TO HELIUM PORT FITTING AS SHOWN IN DETAIL "E". APPLY 170 ± 10 IN-LBS TORQUE TO THE BOLTS(NAS 676V)
   - E. TORQUE THE FORWARD NUT (LSC280-7-451) TO 350-375 FT.-LBS. AND THE AFT NUT (LSC280-7-453) TO 140-160 FT.-LBS.
   - F. TANK MUST BE ADEQUATELY SUPPORTED DURING INSTALLATION.
3. TORQUE BOLTS 32-35 INCH-LBS
4. SAFETY WIRE PER MS33540
5. LDW270-51402-5(-7 INSTL(S) ARE INTERIM FOR LDW270-51402-1(-3 INSTL(S) AND WILL BE REPLACED BY -1(-3 INSTL(S) AFTER COLD FLOW.

MANUFACTURING OPERATIONS UNLESS OTHERWISE SPECIFIED NOTES CHECKED √ APPLY TO THIS DWG.	
PART NUMBER AND ALL OTHER MARKINGS IN REGION MARKED ⊠ USE BOTH SIDES IF NECESSARY.	
FILLET AND INSIDE CORNER RADII TOLERANCES .016R TO .062R ± .010 .063R TO .250R ± .015 OVER .250R ± .030	
DEPTH SHOWN FOR TAPPED HOLES IS FULL THDS. 2-3 IMP THDS. BEYOND PERMISSIBLE.	
EXTERNAL THREAD LENGTH SHOWN INCLUDES 2 IMPERFECT THREADS MAX.	
DO NOT CADMIUM PLATE & PAINT HOLES OR SURFACES MARKED WITH DOUBLE ASTERISK.	
MISMATCH STEP OF ± .005 PERMISSIBLE DUE TO CHANGE OF CUTTERS AT INSIDE INTERSECTING SURFACES.	
DIAMETERS MARKED MUST BE CONCENTRIC WITHIN FULL INDICATOR READING	
HOLES MUST BE KEPT FREE OF CHROME PLATING SOLUTION.	
ALL DIMENSIONS SHOWN TO BE MET AFTER CADMIUM PLATING. THICKNESS OF PLATE .0003 MIN. TO .0005 MAX. MIN. THICKNESS TO BE .0002 ON THREADED AREAS. NO ALLOWANCE FOR PLATING IN HOLES	
125 √ SURFACE ROUGHNESS INCLUDING REAMED HOLES PER MIL-STD-10	
200 √ FOR ALL DRILLED HOLES	
REMOVE ALL BURRS. BREAK ALL EDGES .015-.031	
INSPECTION INFORMATION MINIMUM PERMISSIBLE AVERAGE EDGE DISTANCE MARKED IS	
SYMBOL √ DENOTES SURFACE TO BE MACHINED	
UNLESS OTHERWISE SPECIFIED TOLERANCE ON FLANGES IS ± 1/32	
LENGTHS OF AN, NAS & MS AL ALY RIVETS SHORTER THAN 1 INCH ARE NOT SPECIFIED.	
TOLERANCE ON LOFTED DELINEATIONS IS	

DWG SIZE 34 X 82

PRINTING INFO ONLY
FULL SIZE SHEET AREA (36 X 84)= 21 SQ. FT.
1/2 SIZE SHEET AREA (1/4 OF FULL)= 5.25 SQ. FT.

PRINT TRIM LINE

C B A

LDW280-51950 B

LDW280-51950 B

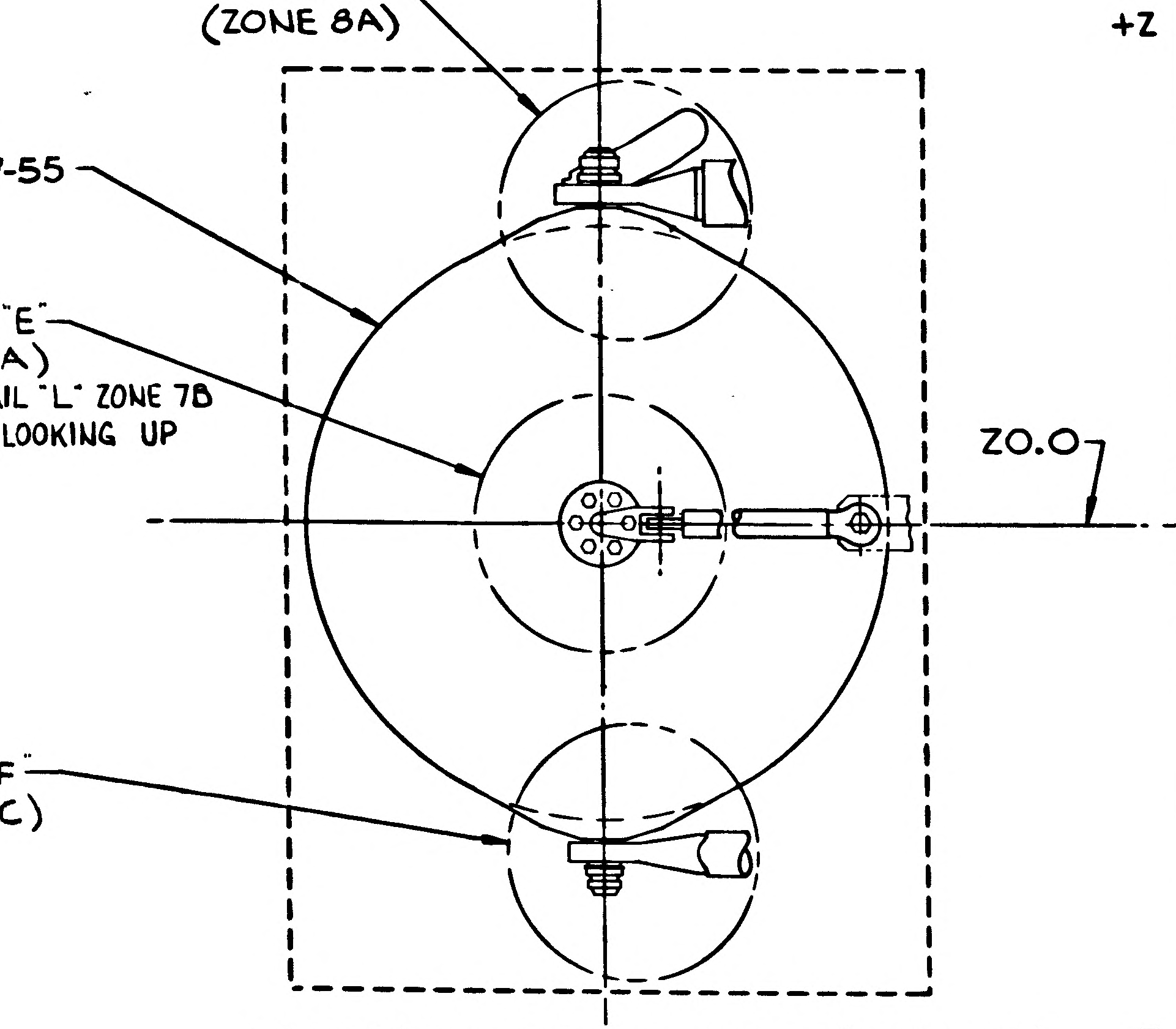
DETAIL "D"
(ZONE 8A)
-Y71.261(REF)
-55
"E"
A)
IL "L" ZONE 7B
LOOKING UP
F
C)
Z0.0

LDW280-51950-3 INSTL (FUEL TANK)
VEIW LOOKING DOWN
(NO SCALE)

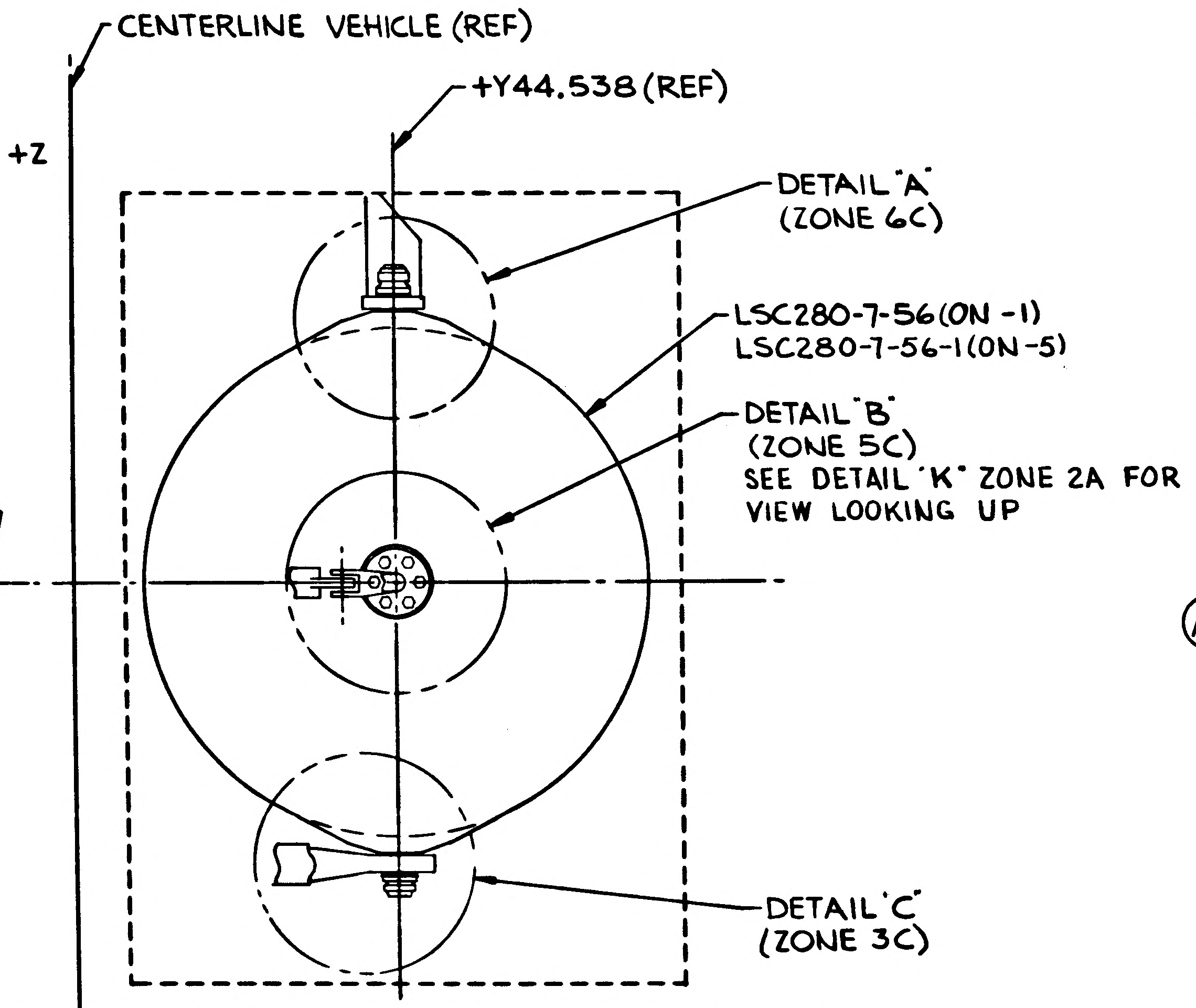
CENTERLINE VEHICLE (REF)
+Z
-Z
+Y44.538 (REF)
DETAIL "A"
(ZONE 6C)
LSC280-7-56(ON -1)
LSC280-7-56-1(ON -5)
DETAIL "B"
(ZONE 5C)
SEE DETAIL "K" ZONE 2A FOR
VIEW LOOKING UP
DETAIL "C"
(ZONE 3C)

LDW280-51950-1 INSTL (OXIDIZER TANK)
-5 INSTL (IDENTICAL TO -1 EXCEPT AS NOTED)
VIEW LOOKING DOWN
(NO SCALE)

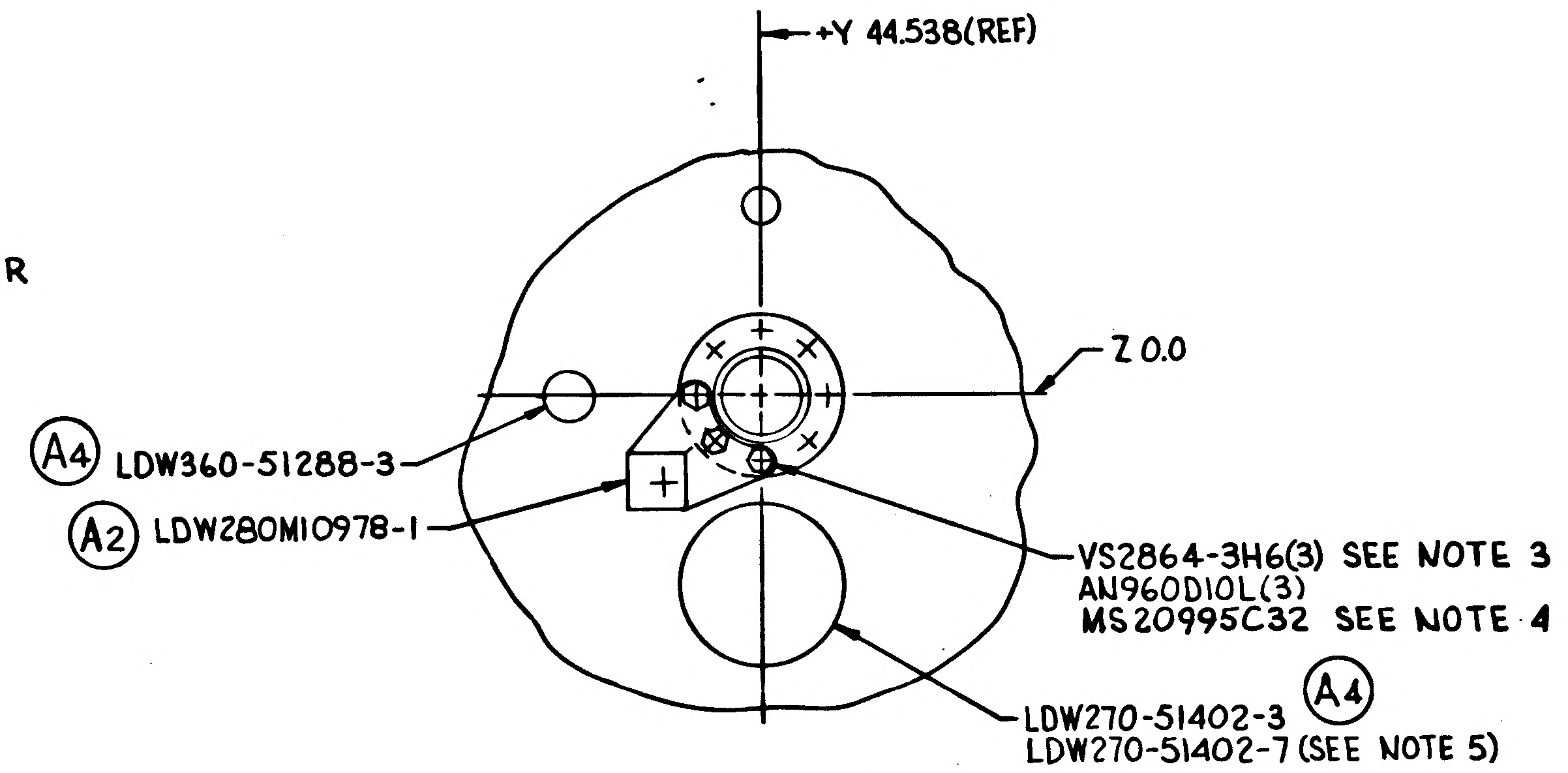
+Y 44.538(REF)
Z 0.0
(A4) LDW360-51288-3
(A2) LDW280M10978-1
VS2864-3H6(3) SEE NOTE 3
AN960D10L(3)
MS20995C32 SEE NOTE 4
LDW270-51402-3 (A4)
LDW270-51402-7 (SEE NOTE 5)
(A6)

DETAIL K (ZONE 3A)
VIEW LOOKING UP
HALF SIZE

02702

NAS 9-1100

CODE IDENT NO. 26512
LDW280-51950 SH 3

	GRUMMAN AIRCRAFT ENGRG CORP., BETHPAGE, L. I., NEW YORK			
	SIZE J	CODE IDENT NO. 26512	LDW280-51950	B
LEM				
MODEL OR END ITEM	SCALE FULL & NOTED		SHEET 3.00	

"THIS IS AN ORIGINAL DWG"

GRUMMAN AIRCRAFT ENGINEERING CORP.
CODE IDENT NO 26512
ENGINEERING ORDER

ENG 32 1 REV 1 65

DWG NO.	LDW280-51950
EO NO	C1
CONTROL INFO NO.	LDW 280-8494

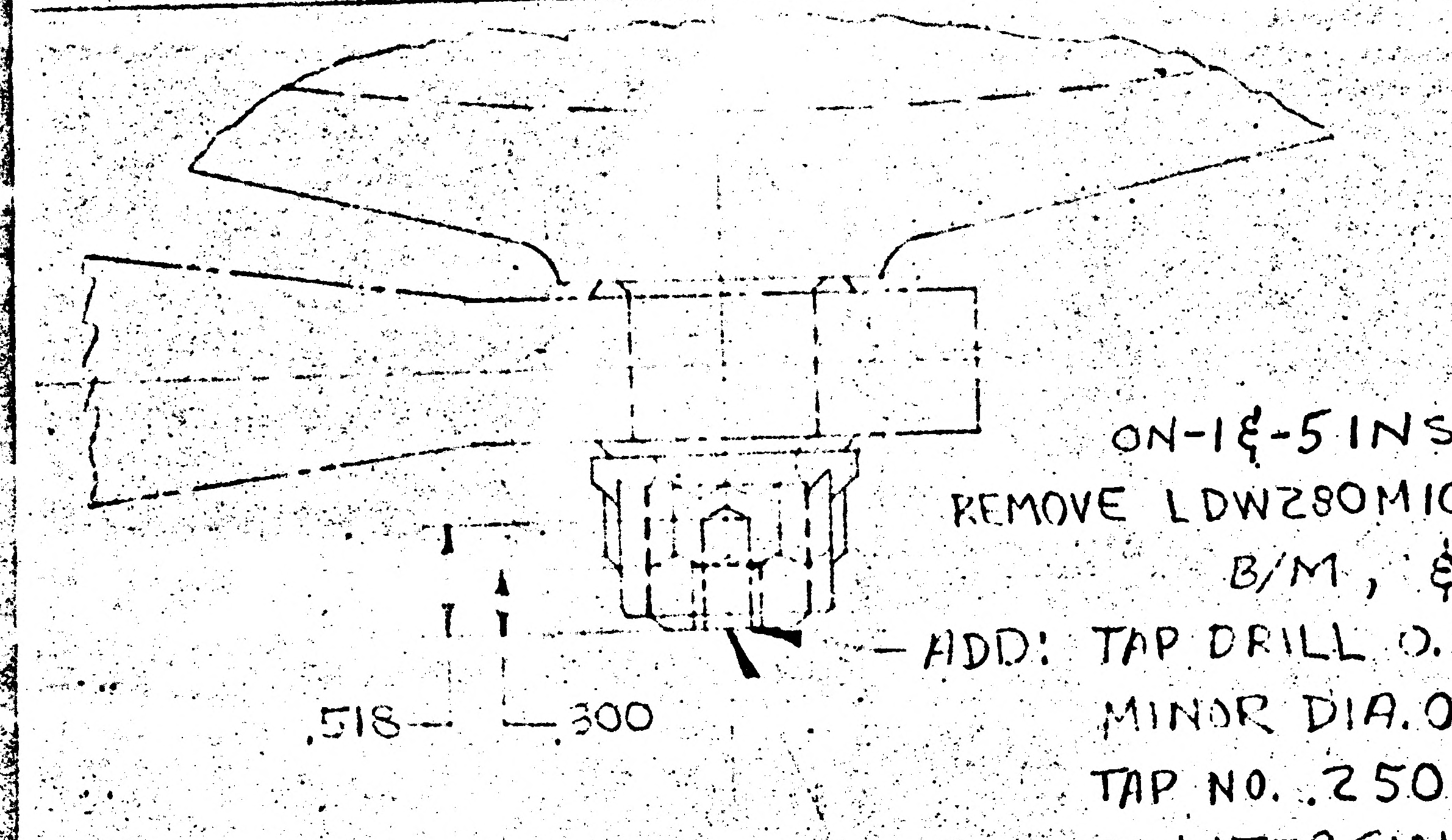

ON-1 & -5 INST,
REMOVE LDW280M10985-1 MOUNT FROM DET. "C", B/M, & VIEW "H-H".

ADD: TAP DRILL 0.220-0.225 (.518 DEEP, REF.)
MINOR DIA. 0.2113 - 0.2190
TAP NO. .250-28 UNF-3B (.300 DEEP, REF.)
COUNTERSINK 90° × .281

ADD: GB540E-3L

2

DETAIL SPEC REQ		CL II ENGRG CHG		CL I ENGRG CHG	

REASON FOR EO: INSERT REQUIRED TO MOUNT TRANSDUCER

DESCRIPTION OF EO: ON-1 & -5, REMOVED LDW280M10985-1, ADDED GB540E-3L, TAP .250-28

Ⓡ GAEC EO RELEASE

MODEL	PROCURING ACTIVITY NO	GAEC UNIT NO	SUB CONTR UNIT NO
LEM		LEM-1 (31)	
		LEM-2 (32)	

DRAWING CHANGE REQD		DISPOSITION OF PARTS		APPROVED BY								
✓		✓						JV			B. H.
				DATE	7/1	7-30		7/19/66	7/20		7-29	7-20-66
REVISE DWG	RECORD EO	REWORK	SCRAP	7-18-66	V.D.I.	WTJ	RELIAB GROUP	GROUP LEADER	STRESS GROUP	LIAISON ENGRG	PROJ ENGRG	

PRIORITY	DRAWING TITLE	DRAWING NO.	EO NO.
C	TANK INST. A/S - PROPELLANT	LDW280-51950	C1

ISSUED BY S.M. KRAMEISEN #7033 SECTION VEH. DES. INT. GROUP NO. 335 PL 35

ENG 32.1 REV 3-65

* LIAISON ENGINEERING #5

GRUMMAN AIRCRAFT ENGINEERING CORP.
CODE IDENT NO. 26512
ENGINEERING ORDER

DWG. NO. LDW280-51950

EO NO. C2

CONTROL INFO NO. LEM-5-9051

ON-1 INSTL, & -5 INSTL.

ADD TO B/M LDW280M11177-1 BOLT, QTY(3), SEE NOTE *.

ADD NOTE *:

AS AN ALTERNATE, LDW280M11177-1 BOLTS MAY BE SUBSTITUTED FOR VS2864-3H6 BOLTS. THE THREADS ON THE LDW280M11177-1 BOLTS ARE TO BE LUBRICATED SPARINGLY WITH DUPONT PR240AC OR DOW CORNING FS 1281.

*- NEXT AVAILABLE NUMBER.

5

DETAIL SPEC REQ ☐ CL II ENGRG CHG ☐ CL I ENGRG CHG ☐

REASON FOR EO: VS2864-3H6 BOLTS ARE NOT AVAILABLE

DESCRIPTION OF EO: ON-1 & -5 INSTL, IN B/M ADDED LDW280M 11177-1 BOLTS. ADDED NOTE *.

GAEC EO RELEASE: UG

MODEL	PROCURING ACTIVITY NO.	GAEC UNIT NO.	SUB CONTR UNIT NO.
LEM		LEM-1(31)	
		LEM-2(32)	

DRAWING CHANGE REQD: REVISE DWG ✓ RECORD EO

DISPOSITION OF PARTS: REWORK ✓ SCRAP

APPROVED BY	JOP			~	JFJ	CH	RMc (W)	
DATE	9-23-66	10-4		~	9-3-66	9/3/66	9-8	9/10/66
9-3-63	V.D.I.	~~SUPPORT~~	RELIAB. GROUP	GROUP LEADER	STRESS GROUP	LIAISON ENGRG	PROJ ENGRG	GOVT

PRIORITY: C

DRAWING TITLE: TANK INSTL. - A/S - PROPELLANT

DRAWING NO.: LDW280-51950

EO NO.: C2

ISSUED BY LIAISON -J. McGILL X-6452 SECTION VDI - PHILLIPS GROUP NO.____ PL 35

01

NAS 9-1100

ENG 32.1 REV 3-65

*

GRUMMAN AIRCRAFT ENGINEERING CORP.
CODE IDENT NO. 26512
ENGINEERING ORDER

DWG. NO. LDW280-51950 | EO NO. C3
CONTROL INFO NO. LDW 280A-0157

FOR LEM-2, CREATE LDW 280-51950-7 IDENTICAL TO -3 EXCEPT
(1) LDW270-52402-1 REPLACES LDW270-51402-1 & -5
(2) TANK ASSY LSC280-7-57 REPLACES LSC280-7-55
RESTRICT -3 TO LM-1 ONLY.

FOR LM-2 ON-1 INST., LDW270-52402-3 REPLACES LDW270-51402-3 & -7
& TANK ASSY LSC280-7-58 REPLACES LSC 280-7-56

IN VIEW G-G, X 253.476 S/B X 253.525, AND X 255.826 S/B X 255.875

IN F/D, REVISE TANK ASSY NUMBERS & LEVEL DET. INSTL. NUMBERS TO AGREE WITH ABOVE INFO.

-7 MAY BE REWORKED FROM -3.

DETAIL SPEC REQ ☐ | CL II ENGRG CHG ☐ | CL I ENGRG CHG ☐

REASON FOR EO: TANK ASSY & LEVEL DET. CHANGES REQUIRE NEW INST.

DESCRIPTION OF EO: ADDED -7 ON-3 EFF. REMOVED LEM-2 REQM'TS. Ⓑ
ON-1, LDW270-52402-3 WAS LDW270-51402-3 & -7
& LSC280-7-58 WAS LSC280-7-56.
IN VIEW G-G, X253.525 WAS X253.476, X255.875 WAS X255.826

GAEC EO RELEASE: FK 9/2/66

MODEL	EFFECTIVITY: PROCURING ACTIVITY NO.	GAEC UNIT NO.	SUB CONTR UNIT NO.
LM	LM-1(31)	LM-2(32)	

	DRAWING CHANGE REQD: REVISE DWG	RECORD EO	DISPOSITION OF PARTS: REWORK	SCRAP
	✓		✓	

				RELIAB. GROUP	GROUP LEADER	STRESS GROUP	LIAISON ENGRG	PROJ ENGRG	
APPROVED BY					—			RMC Ⓔ	
DATE	9/2/66	10-3			—	9/2		9-29	9/26/66
	9-2-66	V.D.I.	~~SUPPORT~~						~~CONT~~

PRIORITY: C
DRAWING TITLE: TANK INST. ASCENT STAGE - PROPELLANT
DRAWING NO.: LDW280-51950
EO NO.: C3

ISSUED BY MURRAY KRAMEISEN x7033 SECTION VEH. DES. INT. GROUP NO. 335 PL. 35

01

NAS 9-1100

01
NAS 9-1100

ENG 22.2 REV 3-65

GRUMMAN AIRCRAFT ENGINEERING CORP.
CODE IDENT NO. 26512
ENGINEERING ORDER

DWG. NO. LDW280-51950 | EO NO. C4
CONTROL INFO NO. LDW280A-4442

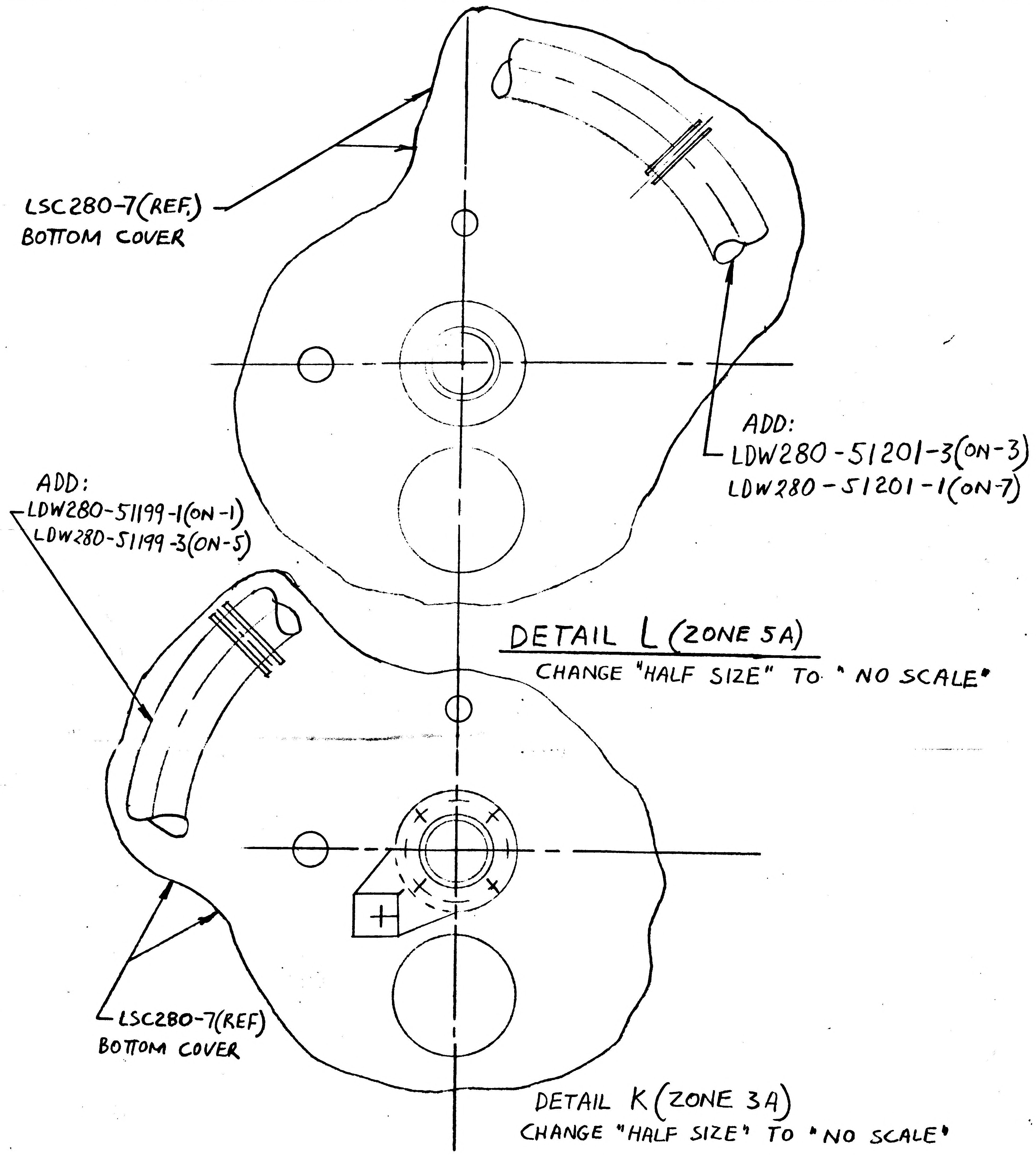
LSC280-7(REF.)
BOTTOM COVER
ADD:
LDW280-51201-3(ON-3)
LDW280-51201-1(ON-7)
ADD:
LDW280-51199-1(ON-1)
LDW280-51199-3(ON-5)
LSC280-7(REF)
BOTTOM COVER

DETAIL L (ZONE 5A)
CHANGE "HALF SIZE" TO "NO SCALE"

DETAIL K (ZONE 3A)
CHANGE "HALF SIZE" TO "NO SCALE"

IN F/D AND B/M ADD LDW280-51201-1 & -3 RING INSTALLATION - LH.
AND LDW280-51199-1 & -3 RING INSTALLATION - R.H. AS SHOWN ABOVE.
REQD PER MODULE : 1 EA.

(INSTL EXIST ON LM-1, -2) (3)

DETAIL SPEC REQ		CL II ENGRG CHG		CL I ENGRG CHG	

REASON FOR EO	DESCRIPTION OF EO	① GAEC C EO RELEASE
TO INSTALL DWG. ON NEXT ASSY. (TO UPDATE DWG)	ADDED TO -1 & -5: LDW280-51199-1 & -3 RESPECTIVELY. ADDED TO -3 & -7: LDW280-51201-3 & -1 RESPECTIVELY. IN DETAIL L & K "NO SCALE" WAS "HALF SIZE"	UE 12/29

MODEL	EFFECTIVITY: PROCURING ACTIVITY NO.	EFFECTIVITY: GAEC UNIT NO.	EFFECTIVITY: SUB CONTR UNIT NO.
LM		LM-1, LM-2	
		(31) (32)	

DRAWING CHANGE REQD: REVISE DWG	DRAWING CHANGE REQD: RECORD EO	DISPOSITION OF PARTS: REWORK	DISPOSITION OF PARTS: SCRAP			SUPPORT	RELIAB. GROUP	GROUP LEADER	STRESS GROUP	LIAISON ENGRG	PROJ ENGRG	
✓		✓		APPROVED BY				—	JV		HW 12-22-66	
				DATE	12/19/66			—	12/20		12-20-66	12-22-66
				6	VDI							

PRIORITY	DRAWING TITLE	DRAWING NO.	EO NO.
C	TANK INSTALLATION - ASCENT STAGE - PROPELLANT	LDW280-51950	C4

ISSUED BY F. WOLFF X1392 SECTION VDI GROUP NO. 335 PL 35

ENG 32.1 REV 3-65

B

GRUMMAN AIRCRAFT ENGINEERING CORP.
CODE IDENT NO. 26512 *
ENGINEERING ORDER

DWG. NO. LDW 280-51950
EO NO. C5
CONTROL INFO NO. LDW 280A-9413

ON-3: DELETE LDW 280-51201-3

ON-5: DELETE LDW 280-51199-3

LMLK

LFM

DETAIL SPEC REQ	☐	CL II ENGRG CHG	☐	CL I ENGRG CHG	☑ LCD # 1894

REASON FOR EO: REDUCE PROPELLANT SYSTEM LEAKAGE

DESCRIPTION OF EO:
ON-3: DELETE LDW 280-51201-3
ON-5: DELETE LDW 280-51199-3

GAEC EO RELEASE: JK 9/29/?

MODEL	~~PROCURING ACTIVITY NO.~~	GAEC UNIT NO.	~~SUB CONTR UNIT NO.~~
LM	LFM-31	LM-1 (31)	

DRAWING CHANGE REQD: REVISE DWG ✓ / RECORD EO
DISPOSITION OF PARTS: REWORK ✓ / SCRAP

	V.D.I.	SUPPORT	RELIAB. GROUP	GROUP LEADER	STRESS GROUP	LIAISON ENGRG	PROJ ENGRG	GOVT
APPROVED BY	JaP				EP			Both
DATE	9/28/67				9/27		9/28	9-29-67

PRIORITY	DRAWING TITLE	DRAWING NO.	EO NO.
C	TANK INSTALLATION - ASCENT STAGE, PROPELLANT	LDW 280-51950	C5

ISSUED BY Geo. W. Rocklein x7033 9/27/67 SECTION Veh. Des. Int. GROUP NO. 335 PL 25

01

NAS 9-1100

ENG 32.1 REV 3-65

GRUMMAN AIRCRAFT ENGINEERING CORP.
CODE IDENT NO. 26512
ENGINEERING ORDER *

DWG. NO. LDW280-51950		EO NO. C6
CONTROL INFO NO. LDW280A-9564		

LFM

IN F/D & B/M

REMOVE LDW280M10978-1, VS2864-3H6 (3)
AN960D10L (3) LOCKWIRE MS20995C32 & TORQUE REQUIREMENT (32-35 INCH LBS.)

LMLK

DETAIL SPEC REQ		CL II ENGRG CHG		CL I ENGRG CHG	✓	LCD 1894

REASON FOR EO	DESCRIPTION OF EO	GAEC EO RELEASE
TO REDUCE PROPELLANT LEAKAGE	REMOVED FROM -1 LDW280M10978-1, VS2864-3H6(3) AN960D10L (3) LOCKWIRE MS20995C32 & TORQUE REQUIREMENT	5 JK 10/10/7

MODEL	EFFECTIVITY		
	E1 ~~PROCURING~~ ACTIVITY NO.	GAEC UNIT NO.	SUB CONTR UNIT NO.
LM	LFM-31	LM-1 (31)	
		LM-2 (32)	

DRAWING CHANGE REQD		DISPOSITION OF PARTS	
✓		✓	
REVISE DWG	RECORD EO	REWORK	SCRAP

APPROVED BY	JAP			—	FD		WRB	Botti
DATE	10/5/67			—	10/6		10/5/67	10-6-67
A	VDI	SUPPORT	RELIAB. GROUP	GROUP LEADER	STRESS GROUP	LIAISON ENGRG	PROJ ENGRG	~~SUFF~~

PRIORITY	DRAWING TITLE	DRAWING NO.	EO NO.
C	TANK INSTL ASCENT STAGE - PROPELLANT	LDW280-51950	C6

ISSUED BY ED BIANCHI X1392 SECTION VDI GROUP NO. 332 PL 25

01

NAS 9-1100

ENG 32.1 REV 3-65

GRUMMAN AIRCRAFT ENGINEERING CORP.
CODE IDENT NO. 26512
ENGINEERING ORDER

DWG. NO. LDW280-51950
EO NO. C7
CONTROL INFO NO. LDW280A9880

ON -3 INSTL IN F/D & B/M
LDW280-51989-1 WAS LSC280-7-55

LFM

LMLK

DETAIL SPEC REQ	☐	CL II ENGRG CHG	☐	CL I ENGRG CHG	✓	LCD 1894	3

REASON FOR EO: REDUCE PROPELLANT LEAKAGE

DESCRIPTION OF EO: ON -3 INSTL IN F/D & B/M
LDW280-51989-1 WAS LSC280-7-55

GAEC EO RELEASE: JK 10/19/67

MODEL	EFFECTIVITY		
	PROCURING ACTIVITY NO.	GAEC UNIT NO.	SUB CONTR UNIT NO.
LM	LFM-31	LM-1 (31)	

DRAWING CHANGE REQD		DISPOSITION OF PARTS	
✓		✓	
REVISE DWG	RECORD EO	REWORK	SCRAP

APPROVED BY								
DATE	10/18/67			10/18/67	10-18		10/18	10-19-67
~	VDI	SUPPORT	RELIAB. GROUP	GROUP LEADER	STRESS GROUP	LIAISON ENGRG	PROJ ENGRG	~~GOVT~~

PRIORITY	DRAWING TITLE	DRAWING NO.	EO NO.
C	TANK INSTL A/S PROPELLANT	LDW280-51950	C7

ISSUED BY HUGH RYAN X1392 10-18-67 SECTION VDI (EQUIP LINES) GROUP NO. 332 PL 25

01

NAS 9-1100

LDW280-51989 A

LMLK

MODEL OR END ITEM	NEXT ASSY	MODULE OR SER NO.	REQD PER MODULE OR END ITEM
LM	LDW280-51950	LM-1(31)	1
PART NO. LDW280-51989-1		GAEC SCH NO. 31	

MODEL OR END ITEM	NEXT ASSY	MODULE OR SER NO.	REQD PER MODULE OR END ITEM
PART NO.		GAEC SCH NO.	

MODEL OR END ITEM	NEXT ASSY	MODULE OR SER NO.	REQD PER MODULE OR END ITEM
PART NO.		GAEC SCH NO.	

WORK PKG FUNCTION NO. 111 (5)

SH REV STATUS: FOR DESCRIPTION OF REV SEE SUBQ SH

SHEET	1.00	1.10		2.00		3.00			
REV	A	A		A		A			
SHEET									
REV									
SHEET									
REV									

LAST SECT LTR USED A

LAST DASH NO. USED -1

GRUMMAN REL INFO A

PRIM NO.	JK(00		
227	MP-16A	12/15/7	

UNLESS OTHERWISE SPECIFIED DIMENSIONS ARE IN INCHES.
TOLERANCE UNLESS SPECIFIED
FRACTIONS - DECIMALS - ANGLES
± 1/32 - ±.020 - ±1/2°

ORIG DWG AUTH

DETAIL SPEC REQUIREMENT ☐
CLASS II ENGRG CHANGE ☐
CLASS I ENGRG CHANGE ✓

LCD-1894

CONTRACT NO. NAS 9-1100

LINE ITEM

DOCUMENTATION TYPE II

DRAWN BY	R. LAMBERT 11-28-67	RELIABILITY	
LAYOUT BY	H. RYAN		
CHECKED BY	JFC 12-8-67		
GR. LEADER	J Wolf 12-9-67		
VEH. DES. INT.	12/13		
STRUCTURES	BW 12-14	PROJ ENGR	12/13/67
STRUCTURES	12/15	REL GROUP	12/15/67
WEIGHTS			

GRUMMAN AIRCRAFT ENGRG CORP
BETHPAGE, L. I., NEW YORK

TANK ASSEMBLY
FUEL

SIZE	CODE IDENT NO.		
B	26512	LDW280-51989	A

Ⓐ

SCALE NONE

SHEET 1.00 OF 4

ENG 77.1 12-65

01

NAS 9-1100

REVISIONS FOR CONTINUATION OF REVISIONS SEE SHEET ______

CHANGE LTR	ITEM NO.	SHEET NO.	ZONE	GRUMMAN INFO ONLY	DET SPEC	CLASS I	CLASS II	ENGRG ORDER	DESCRIPTION	EFFECTIVITY	DISPOSITION OF EXISTING PARTS REWORK	DISPOSITION OF EXISTING PARTS SCRAP	CHANGED BY AND DATE	ENGRG APPD	APPD
A	1	1.00, 1.10, 2.00, 3.00				✓		EO-A1 LCD-1894	EO-A1, INITIAL DWG. RELEASE, PARTS MADE PER EO ADDED NOTE 7	LM-1	NOT	REQD.	LAMBERT 11-28-67		

CHG APPROVED

LTR	GROUP LDR	VEH. DES. INT.	STRUCTURES	STRUCTURES	WEIGHTS	RELIABILITY				
A	12-9									

GRUMMAN AIRCRAFT ENGRG CORP., BETHPAGE, L. I., NEW YORK

SIZE	CODE IDENT NO.		
B	26512	LDW280-51989	A Ⓐ

SCALE NONE SHEET 1.10

ENG 77.16 3-66

01

NAS 9-1100

CL	QTY PER ASSEMBLY -1	PART NO.	I&T	CODE IDENT	NOMENCLATURE OR DESCRIPTION	MATERIAL	GOVT SPEC	COML SPEC	STOCK SIZE	PROCESS SYM	FINISH NO.	ZONE
	A/R		E		SEALANT	SEE NOTE 6						
A	A/R	MS20995C32	E		LOCKWIRE	STD. PART						
J	1	LSC280-7-55	S		TANK ASSY. FUEL	SEE NOTE 1						
J		LDW280-51989-1	S		TANK ASSY. FUEL					NONE	NONE	

CLEANLINESS LEVEL PER LSP14-0011

SYM OR NO.	PROCESS SYM OR FINISH NO.	GRUMMAN SPEC OR MILITARY SPEC	SYM OR NO.	PROCESS SYM OR FINISH NO.	GRUMMAN SPEC OR MILITARY SPEC	SYM OR NO.	PROCESS SYM OR FINISH NO.	GRUMMAN SPEC OR MILITARY SPEC

I & T: IDENTIFICATION AND TRACEABILITY IN ACCORDANCE WITH LPC19-2(GRUMMAN) LPC19-3(VENDOR)

GRUMMAN AIRCRAFT ENGRG CORP., BETHPAGE, L. I., NEW YORK

SIZE	CODE IDENT NO.		
B	26512	LDW280-51989	A

(A)

SCALE NONE

SHEET 2.00

ENG 77.2 5-64

01 NAS 9-1100

LDW280-51989 A

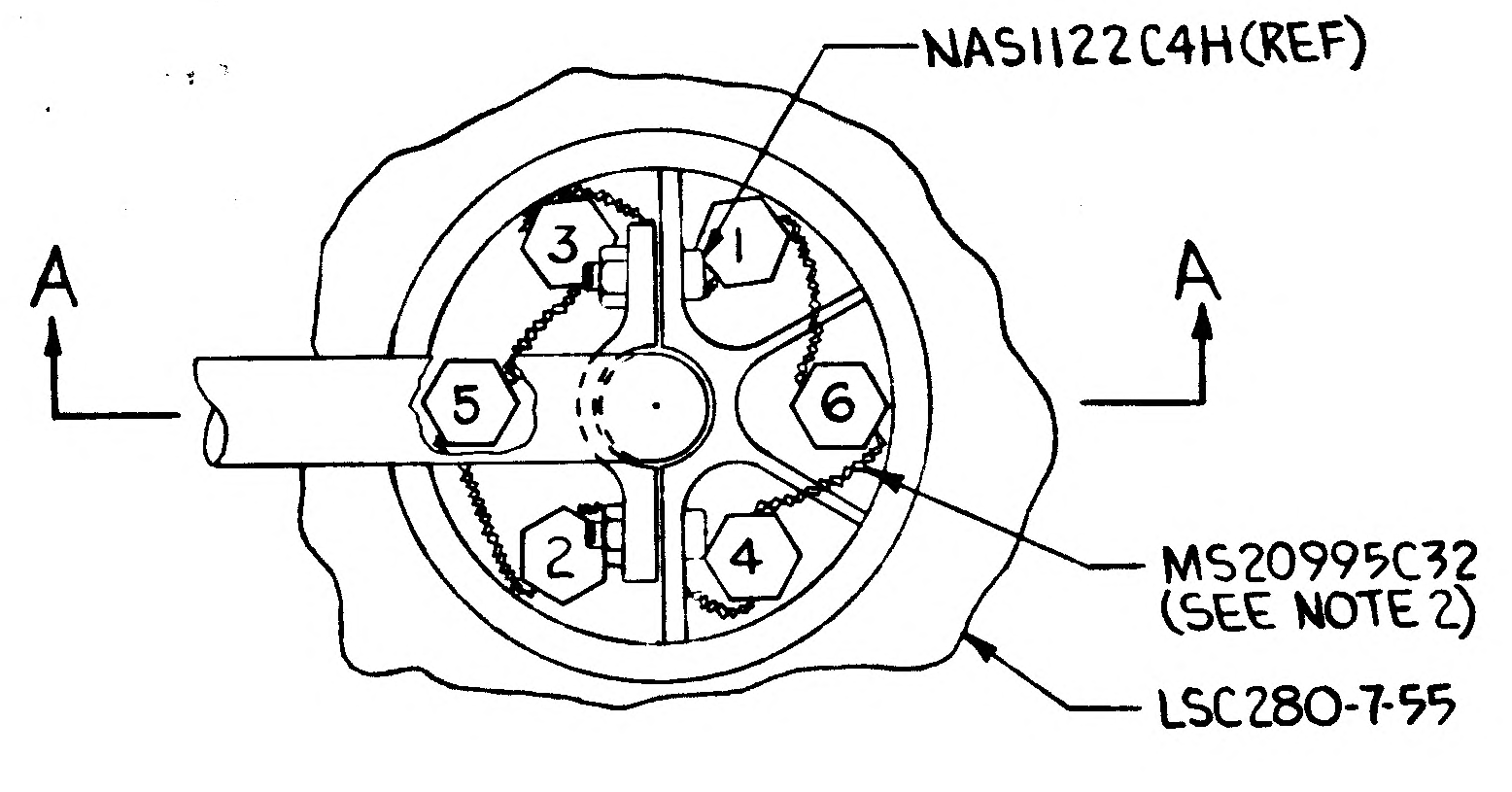

LDW280-51989-1 ASSY.

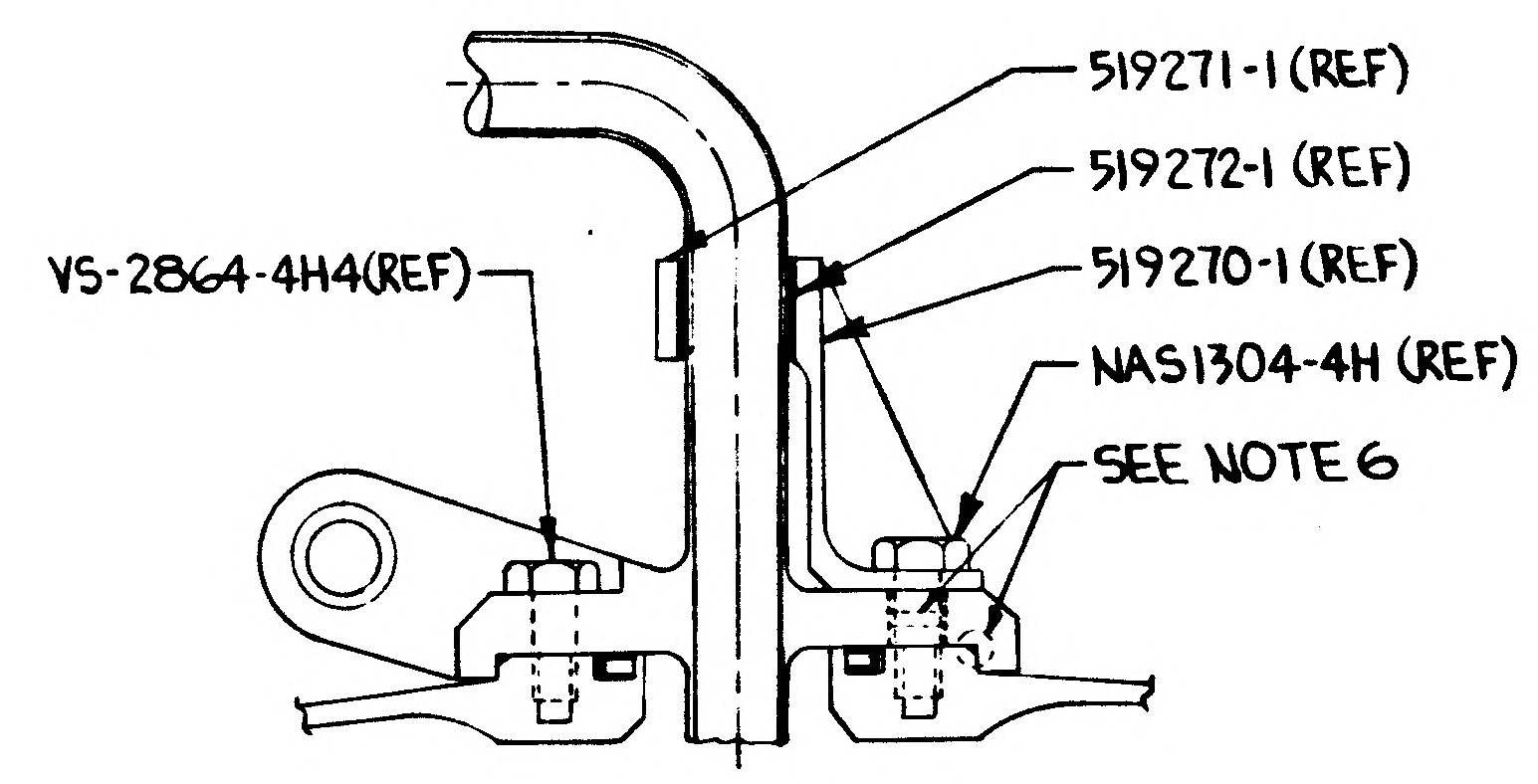

SECTION A-A

NOTES:

1. COMMERCIAL PART, SEE SPECIFICATION CONTROL DWG. BEFORE ORDERING.

2. INSTALL LOCKWIRE PER MS33540, MULTIPLE FASTNER APPLICATION, DOUBLE TWIST METHOD.

3. BOLT REMOVAL PROCEDURE:
   - a PHYSICAL LOCATION FOR START OF SEQUENCE (BOLT #1) IS OPTIONAL.
   - b LOOSEN ALL BOLTS PER SEQUENCE 1/6 TURN (60° ± 10°).
   - c LOOSEN ALL BOLTS PER SEQUENCE 1/4 TURN ADDITIONAL TURN (90° ±15°).
   - d REPEAT STEP "c" UNTIL BOLTS MAY BE REMOVED BY HAND.

4. BOLT TORQUING PROCEDURE:
   - a PHYSICAL LOCATION FOR START OF SEQUENCE (BOLT #1) IS OPTIONAL.
   - b INSTALL ALL BOLTS IN PLACE FINGER TIGHT.
   - c TORQUE ALL BOLTS PER SEQUENCE TO 15 IN-LBS. REPEAT SEQUENCE AS NECESSARY UNTIL BOLTS NO LONGER TURN WHEN 15 IN-LBS. IS APPLIED.
   - d REPEAT STEP "c" AT 25 IN-LBS AND AT 50 IN-LBS.
   - e TORQUE BOLTS IN SEQUENCE TO 65-70 IN-LBS.

5. INSTALL 517550-1 FTG. ASSY., 519270-1 BRACKET, 519271-1 CLIP & 519272-1 SLEEVE IN THE FOLLOWING SEQUENCE: (PARTS OF LSC280-7-55)
   - a INSTALL 517550-1 FTG. ASSY., 519270-1 BRACKET & 519272-1 SLEEVE FINGER TIGHTEN ATTACH BOLTS.
   - b ATTACH 519271-1 CLIP & TORQUE NAS1122C4H BOLTS (3-5 IN-LBS) ABOVE LOCKING TORQUE.
   - c TORQUE 517550-1 FTG. ASSY., ATTACH BOLTS PER NOTE 4.

6. APPLY SECONDARY SEALANT LED-520-35 (VISTANEX) ON 517550-1 FTG ASSY & ON ATTACH BOLTS PER LPC 280-47.

7. THIS DWG. AFFECTED BY THE FOLLOWING LFM. SEE LFM-31 FOR EFFECTIVITY AND MODIFICATION.

LDW280-51989 A

	GRUMMAN AIRCRAFT ENGRG CORP., BETHPAGE, L. I., NEW YORK			
LM	SIZE C	CODE IDENT NO. 26512	LDW280-51989	A
MODEL OR END ITEM	SCALE Full		SHEET 3.00	

Ⓐ

01

NAS 9-1100

LDW280-52000

MODEL OR END ITEM	NEXT ASSY	MODULE OR SER NO.	REQD PER MODULE OR END ITEM
LM	—	LM-2 (32)	1
PART NO. LDW280-52000-1		GAEC SCH NO. 10	

MODEL OR END ITEM	NEXT ASSY	MODULE OR SER NO.	REQD PER MODULE OR END ITEM
PART NO.		GAEC SCH NO.	

MODEL OR END ITEM	NEXT ASSY	MODULE OR SER NO.	REQD PER MODULE OR END ITEM
PART NO.		GAEC SCH NO.	

WORK PKG FUNCTION NO. 110

SH REV STATUS: FOR DESCRIPTION OF REV SEE SUBQ SH

SHEET	1.00		2.00		3.00				
REV									
SHEET									
REV									
SHEET									
REV									

LAST SECT LTR USED	-	GRUMMAN REL INFO		
		PRIM NO.	4E (001)	
LAST DASH NO. USED	-1	215	MP-14	2-1-7

UNLESS OTHERWISE SPECIFIED DIMENSIONS ARE IN INCHES.

TOLERANCE UNLESS SPECIFIED

FRACTIONS - DECIMALS - ANGLES

~ ~ ~

ORIG DWG AUTH

DETAIL SPEC REQUIREMENT

CLASS II ENGRG CHANGE

CLASS I ENGRG CHANGE

CONTRACT NO. NAS 9-1100

LINE ITEM

DOCUMENTATION TYPE II (5)

DRAWN BY	GENTILE 1/26/67		
LAYOUT BY	MALIA		
CHECKED BY	EG 1-27-67		
GR. LDR	1/30/67		
V. D. I	J. Pustere 1/30/67		
STRUCT	BW 1-30	PROJ ENGR	1/31/67
STRUCT	1/31	REL GROUP	2/1/67
WEIGHTS			

② GRUMMAN AIRCRAFT ENGRG CORP
BETHPAGE, L. I., NEW YORK

FINAL ASSEMBLY
LUNAR MODULE

SIZE	CODE IDENT NO.	
B	26512	LDW280-52000
SCALE	NONE	SHEET 1.00 OF 3

ENG 77.1 12-65

CDR = 1/28/67

01

NAS 9-1100

QTY PER ASSEMBLY -1	PART NO.	I&T	CODE IDENT	NOMENCLATURE OR DESCRIPTION	MATERIAL	GOVT SPEC	COML SPEC	STOCK SIZE	PROCESS SYM	FINISH NO.	ZONE
1	LDW320-52400-1	E		EXPLOSIVE DEVICE INSTL	SEE DWG						5B
1	LDW280-52508-1			DESCENT STAGE ASSY	SEE DWG						4B
1	LDW280-52001-1			ASCENT STAGE ASSY	SEE DWG						4B
1	LDW280-52000-11	E		NAMEPLATE	MAKE FROM GNIIW -1					NOTE 2	5B
	LDW280-52000-1	S		FINAL ASSEMBLY					NONE	NONE	

SYM OR NO.	PROCESS SYM OR FINISH NO.	GRUMMAN SPEC OR MILITARY SPEC	SYM OR NO.	PROCESS SYM OR FINISH NO.	GRUMMAN SPEC OR MILITARY SPEC	SYM OR NO.	PROCESS SYM OR FINISH NO.	GRUMMAN SPEC OR MILITARY SPEC

I & T: IDENTIFICATION AND TRACEABILITY IN ACCORDANCE WITH LPC-19-2 (GAEC) LPC-19-3 (VENDOR)

GRUMMAN AIRCRAFT ENGRG CORP., BETHPAGE, L. I., NEW YORK

SIZE	CODE IDENT NO.	
B	26512	LDW280-52000

SCALE NONE

SHEET 200.

ENG 77.2 5-64

01

NAS 9-1100

LDW280-52000 SH300

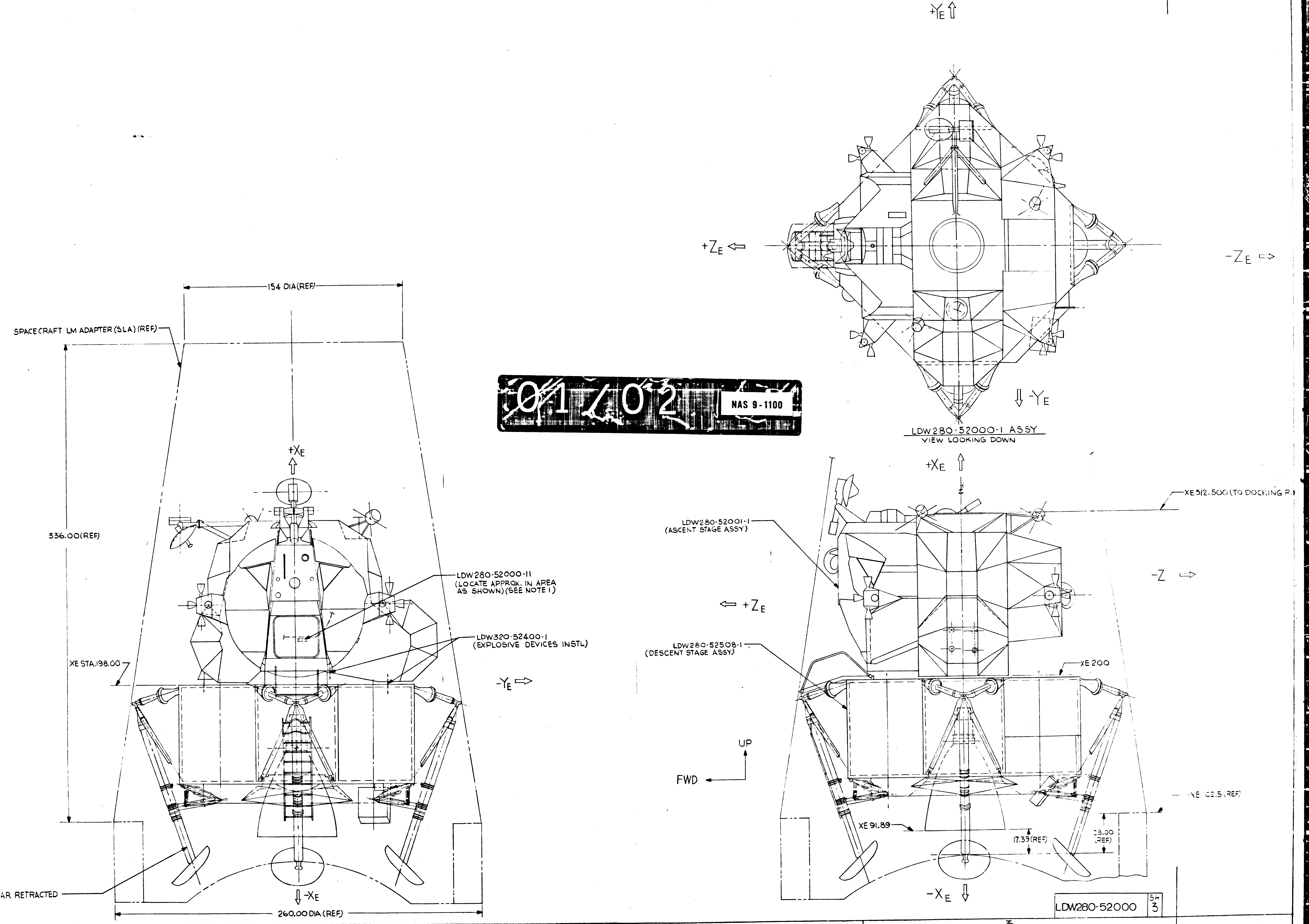

+YE
+ZE
-ZE
-YE
LDW280-52000-1 ASSY
VIEW LOOKING DOWN
154 DIA (REF)
SPACECRAFT LM ADAPTER (SLA) (REF)
336.00 (REF)
+XE
LDW280-52000-11
(LOCATE APPROX. IN AREA AS SHOWN) (SEE NOTE 1)
LDW320-52400-1
(EXPLOSIVE DEVICES INSTL)
XE STA. 198.00
-YE
LANDING GEAR RETRACTED
-XE
260.00 DIA (REF)
+XE
XE 312.500 (TO DOCKING R
LDW280-52001-1
(ASCENT STAGE ASSY)
-Z
+ZE
LDW280-52508-1
(DESCENT STAGE ASSY)
XE 200
UP
FWD
XE 102.5 (REF)
XE 91.89
17.39 (REF)
28.00 (REF)
-XE

01/02 NAS 9-1100

LDW280-52000 SH 3

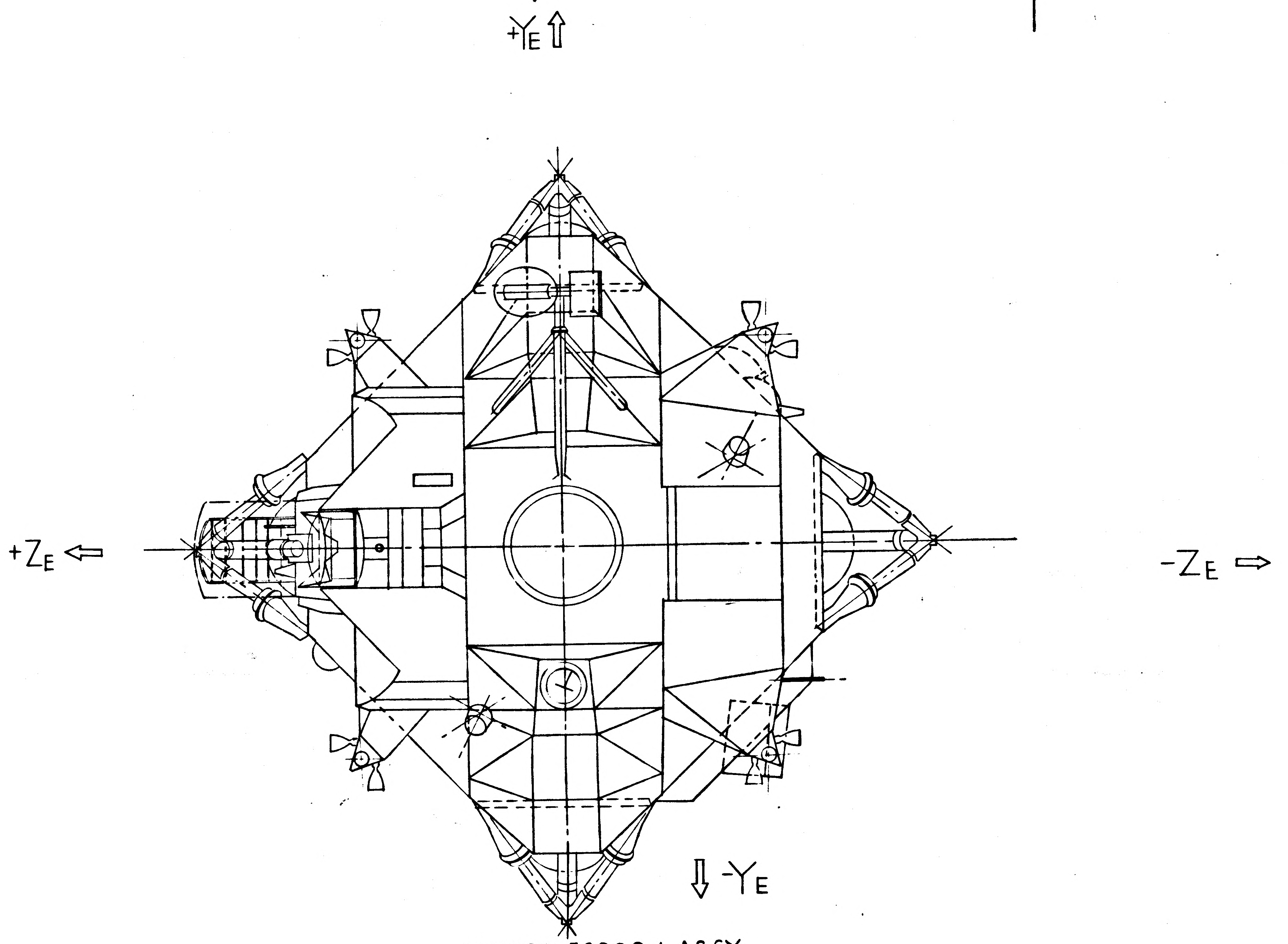

LDW280-52000-1 ASSY
VIEW LOOKING DOWN

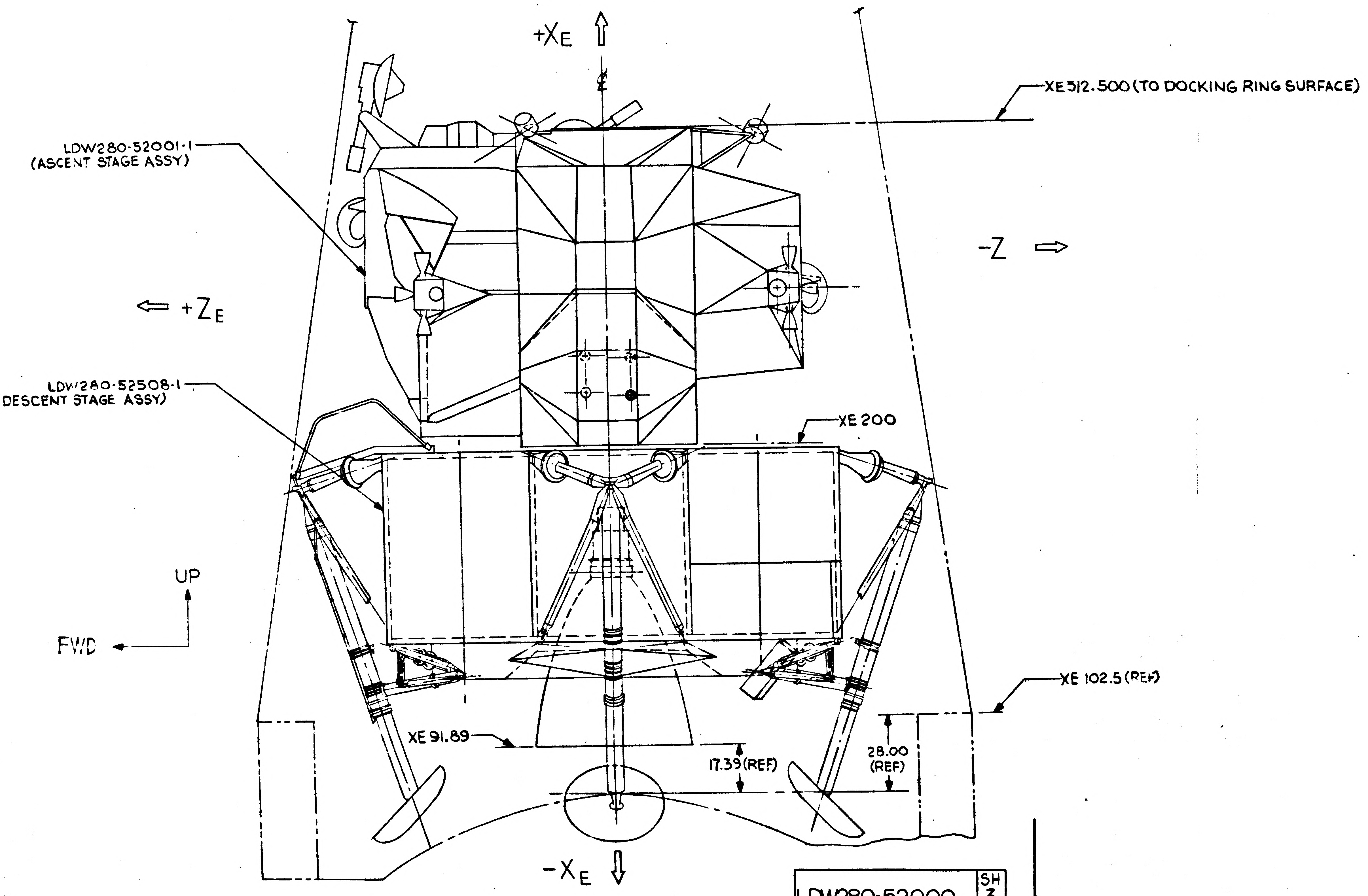

LDW280-52000 SH 3

MANUFACTURING OPERATIONS
UNLESS OTHERWISE SPECIFIED
NOTES CHECKED √ APPLY TO THIS DWG.

PART NUMBER AND ALL OTHER MARKINGS IN REGION MARKED ⊠ USE BOTH SIDES IF NECESSARY.

FILLET AND INSIDE CORNER RADII TOLERANCES
.016R TO .062R ± .010
.063R TO .250R ± .015
OVER .250R ± .030

DEPTH SHOWN FOR TAPPED HOLES IS FULL THDS. 2-3 IMP THDS. BEYOND PERMISSIBLE.

EXTERNAL THREAD LENGTH SHOWN INCLUDES 2 IMPERFECT THREADS MAX.

DO NOT CADMIUM PLATE & PAINT HOLES OR SURFACES MARKED WITH DOUBLE ASTERISK.

MISMATCH STEP OF ± .005 PERMISSIBLE DUE TO CHANGE OF CUTTERS AT INSIDE INTERSECTING SURFACES.

DIAMETERS MARKED MUST BE CONCENTRIC WITHIN FULL INDICATOR READING

HOLES MUST BE KEPT FREE OF CHROME PLATING SOLUTION.

ALL DIMENSIONS SHOWN TO BE MET AFTER CADMIUM PLATING. THICKNESS OF PLATE .0003 MIN. TO .0005 MAX. MIN. THICKNESS TO BE .0002 ON THREADED AREAS. NO ALLOWANCE FOR PLATING IN HOLES

125 √ SURFACE ROUGHNESS INCLUDING REAMED HOLES PER MIL-STD-10

200 √ FOR ALL DRILLED HOLES

REMOVE ALL BURRS. BREAK ALL EDGES .015-.031

INSPECTION INFORMATION MINIMUM PERMISSIBLE AVERAGE EDGE DISTANCE MARKED IS

SYMBOL √ DENOTES SURFACE TO BE MACHINED

UNLESS OTHERWISE SPECIFIED TOLERANCE ON FLANGES IS ± 1/32

LENGTHS OF AN, NAS & MS AL ALY RIVETS SHORTER THAN 1 INCH ARE NOT SPECIFIED.

TOLERANCE ON LOFTED DELINEATIONS IS

DWG SIZE 34 X 70

PRINTING INFO ONLY
FULL SIZE SHEET AREA (36 X 72) = 18 SQ. FT.
1/2 SIZE SHEET AREA (1/4 OF FULL) = 4.5 SQ. FT.

PRINT TRIM LINE

NOTES

1. BOND LDW280-52000-11 TO +Z27.00 BULKHEAD WITH RTV731 AS PER LSP14-22601
2. NAMEPLATE PROTECTION IN ACCORDANCE WITH GN11AC.

02/02 NAS 9-1100

LDW280-52000

LDW280-52000

	GRUMMAN AIRCRAFT ENGRG CORP., BETHPAGE, L. I., NEW YORK			
LM	SIZE J	CODE IDENT NO. 26512	LDW280-52000	
MODEL OR END ITEM	SCALE			SHEET 3.00

2FR

B

ENG 32.1 REV 3-65

GRUMMAN AIRCRAFT ENGINEERING CORP.
CODE IDENT NO. 26512
ENGINEERING ORDER *

DWG. NO. LDW280-52000
EO NO. A1
CONTROL INFO NO. LDW280A7640

IN F/D & B/M FOR -1 INST'L:
ADD LDW330-52013-5 DISCONNECT INST'L (1 REQ'D/VEH)

DETAIL SPEC REQ		CL II ENGRG CHG	✓	CL I ENGRG CHG		LCD-1354	5

REASON FOR EO: TO ADD DISCONNECT SEALS

DESCRIPTION OF EO: FOR -1. ADDED LDW330-52013-5

GAEC EO RELEASE: JK 6/27/67

MODEL	EFFECTIVITY: PROCURING ACTIVITY NO.	EFFECTIVITY: GAEC UNIT NO.	EFFECTIVITY: SUB CONTR UNIT NO.
LM		LM-2(32)	

DRAWING CHANGE REQD: REVISE DWG	DRAWING CHANGE REQD: RECORD EO	DISPOSITION OF PARTS: REWORK	DISPOSITION OF PARTS: SCRAP
✓		✓	

APPROVED BY				F.D.R.	—			
DATE	6/26/67			6/26/67			6/27	6/27/67
6	VDI	SUPPORT	RELIAB. GROUP	GROUP LEADER	STRESS GROUP	LIAISON ENGRG	PROJ ENGRG	

PRIORITY: C
DRAWING TITLE: FINAL ASSEMBLY LUNAR MODULE
DRAWING NO.: LDW280-52000
EO NO.: A1

ISSUED BY F. BADE X7033 6/24/67 SECTION VEH DES INT GROUP NO. 335 PL 25

01
NAS 9-1100

ENG 32.1 REV 3-65

GRUMMAN AIRCRAFT ENGINEERING CORP.
CODE IDENT NO. 26512
ENGINEERING ORDER

DWG. NO. LE0280
EO NO. 789
CONTROL INFO NO. LM 280B0308

ON THE FOLLOWING DWGS REMOVE INSTL SHOWN. FROM-✱✱

DWG NO DASH ✱✱	INSTL TO BE ✱ REMOVED	CHANGE NO	EFF.
✓ LDW280-28000-1	LDW330-28013-5	A4	LTA-8 (18)
✓ LDW280-51000-1	LDW330-51013-5	A3	LM-1 (31)
✓ LDW280-52000-1	LDW330-52013-5	A2	LM-2 (32)
LDW280-53000-1	LDW330-53013-5	A2	LM-3 (33)
LDW280-54000-1&-3	LDW330-54013-5	A3	LM-4 THRU LM-15 (34) THRU (45)

DETAIL SPEC REQ ☐ CL II ENGRG CHG ☐ CL I ENGRG CHG ☑ LCD 1939 (5)

REASON FOR EO: INSTL NO LONGER REQ'D

DESCRIPTION OF EO: FOR-✱✱ REMOVED ✱ INSTL.

GAEC EO RELEASE: C JK 11/7/67

MODEL	EFFECTIVITY: PROCURING ACTIVITY NO.	GAEC UNIT NO.	SUB CONTR UNIT NO.
LM		NOTED	

DRAWING CHANGE REQD: REVISE DWG ✓ RECORD EO ☐
DISPOSITION OF PARTS: REWORK ✓ SCRAP ☐

APPROVED BY				GROUP LEADER	STRESS GROUP	~~DIVISION~~ ENGRG	PROJ ENGRG	
				F.M.R	WH	RG for HJG / KSC		
DATE	11/6/67			11-6-67	11/6/67		11/1/67	11/6/67
D	VDI	SUPPORT	RELIAB. GROUP					

PRIORITY: C
DRAWING TITLE: FINAL ASSEMBLY LUNAR MODULE
DRAWING NO.: LEO-280
EO NO.: 789

ISSUED BY F. BADE Y7033 SECTION VEH. DES. INT. GROUP NO. 335 PL 25

01

NAS 9-1100

ENG 32.1 REV 3-65

B

GRUMMAN AIRCRAFT ENGINEERING CORP.

CODE IDENT NO. 26512

ENGINEERING ORDER

*

DWG. NO. LDW 280-52000

EO NO. A3

CONTROL INFO NO. LDW 280B-0231

ON -1:

ADD LDW 280-52357-5

DETAIL SPEC REQ		CL II ENGRG CHG		CL I ENGRG CHG	✓	LCD# 2317 & LCD #2318

5

REASON FOR EO: PROVIDE LOCKWIRE & TORQUE REQ'M'T FOR E.C.I. COUPLING RING

DESCRIPTION OF EO: ON -1: ADDED LDW 280-52357-5

GAEC EO RELEASE (R): VK 11/7/67

MODEL	~~PROCURING ACTIVITY NO.~~	GAEC UNIT NO.	~~SUB CONTR UNIT NO.~~
LM		LM-2 (32)	

DRAWING CHANGE REQD		DISPOSITION OF PARTS	
✓		✓	
REVISE DWG	RECORD EO	REWORK	SCRAP

APPROVED BY	JAS			FAR	GW		WRB	
DATE	11/6/67			11/06/67	11-6		11/6/67	11/7/67
E	V.D.I.	SUPPORT	RELIAB. GROUP	GROUP LEADER	STRESS GROUP	LIAISON ENGRG	PROJ ENGRG	

PRIORITY	DRAWING TITLE	DRAWING NO.	EO NO.
C	LEM ASSEMBLY	LDW 280-52000	A3

11-8

ISSUED BY Geo. W. Rockkein x7033 11/6/67 SECTION Veh. Des. Int. GROUP NO. 335 PL 25

01

NAS 9-1100

ENG 32.1 REV 3-65

GRUMMAN AIRCRAFT ENGINEERING CORP.
CODE IDENT NO. 26512
ENGINEERING ORDER

DWG. NO. LDW 280-52000		EO NO. A4
CONTROL INFO NO. LDW 280B 3791		

ADD THE FOLLOWING NOTE TO THE F/D

NOTE * MODIFICATIONS TO LM-2 FOR TEST AND RESTORATION TO UNMANNED FLIGHT CONFIGURATION ARE SHOWN ON LRA 280-52000

* DENOTES NEXT AVAILABLE NOTE #

DETAIL SPEC REQ	☐	CL II ENGRG CHG	☐	CL I ENGRG CHG	✓	LCD 3177, CCA 1135

⑤

REASON FOR EO	DESCRIPTION OF EO	GAEC EO RELEASE
TO DEFINE VEHICLE FOR POGO VIBRATION TEST	ADD NOTE * TO F/D	6-8-68

MODEL	EFFECTIVITY		
	PROCURING ACTIVITY NO.	GAEC UNIT NO.	SUB CONTR UNIT NO.
LM		LM-2 (32)	

DRAWING CHANGE REQD		DISPOSITION OF PARTS										
✓		✓		APPROVED BY				WT	BW			
				DATE	6/4/68			6/4/68	6-5		6/5/68	6-7-68
REVISE DWG	RECORD EO	REWORK	SCRAP		VDI	SUPPORT	RELIAB. GROUP	GROUP LEADER	STRESS GROUP	LIAISON ENGRG	PROJ ENGRG	GOVT

PRIORITY	DRAWING TITLE	DRAWING NO.	EO NO.
C	FINAL ASSY LUNAR MODULE	LDW 280-52000	A4

ISSUED BY W. TRAUT X1392 SECTION VDI GROUP NO. 280 PL 25

01

NAS 9-1100

01 NAS 9-1100

ENG 32.2 REV 3-65

GRUMMAN AIRCRAFT ENGINEERING CORP.
CODE IDENT NO. 26512
ENGINEERING ORDER

DWG. NO. LDW380-52000 | EO NO. A7
CONTROL INFO NO. LDW267-41-1/1

ON SHEET 4.00 ZONE 8A AT J160 REVISE AS SHOWN BELOW:

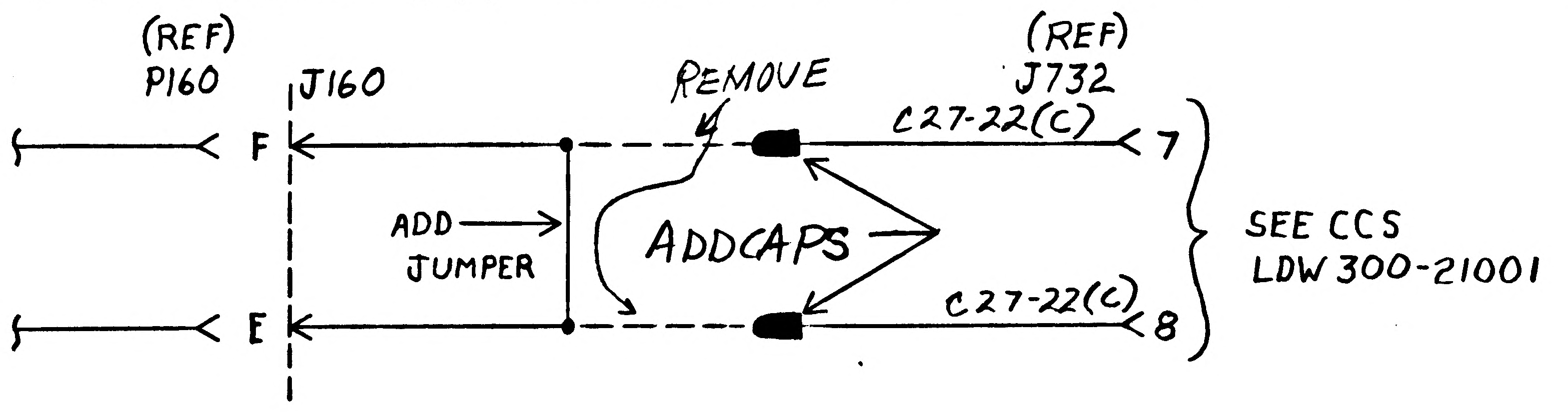

(REF) P160
J160
F
E
ADD JUMPER
REMOVE
ADDCAPS
(REF) J732
C27-22(C)
C27-22(C)
7
8
SEE CCS LDW300-21001

ON SHEET 500 ZONE 22C AT J160 REVISE AS SHOWN BELOW:

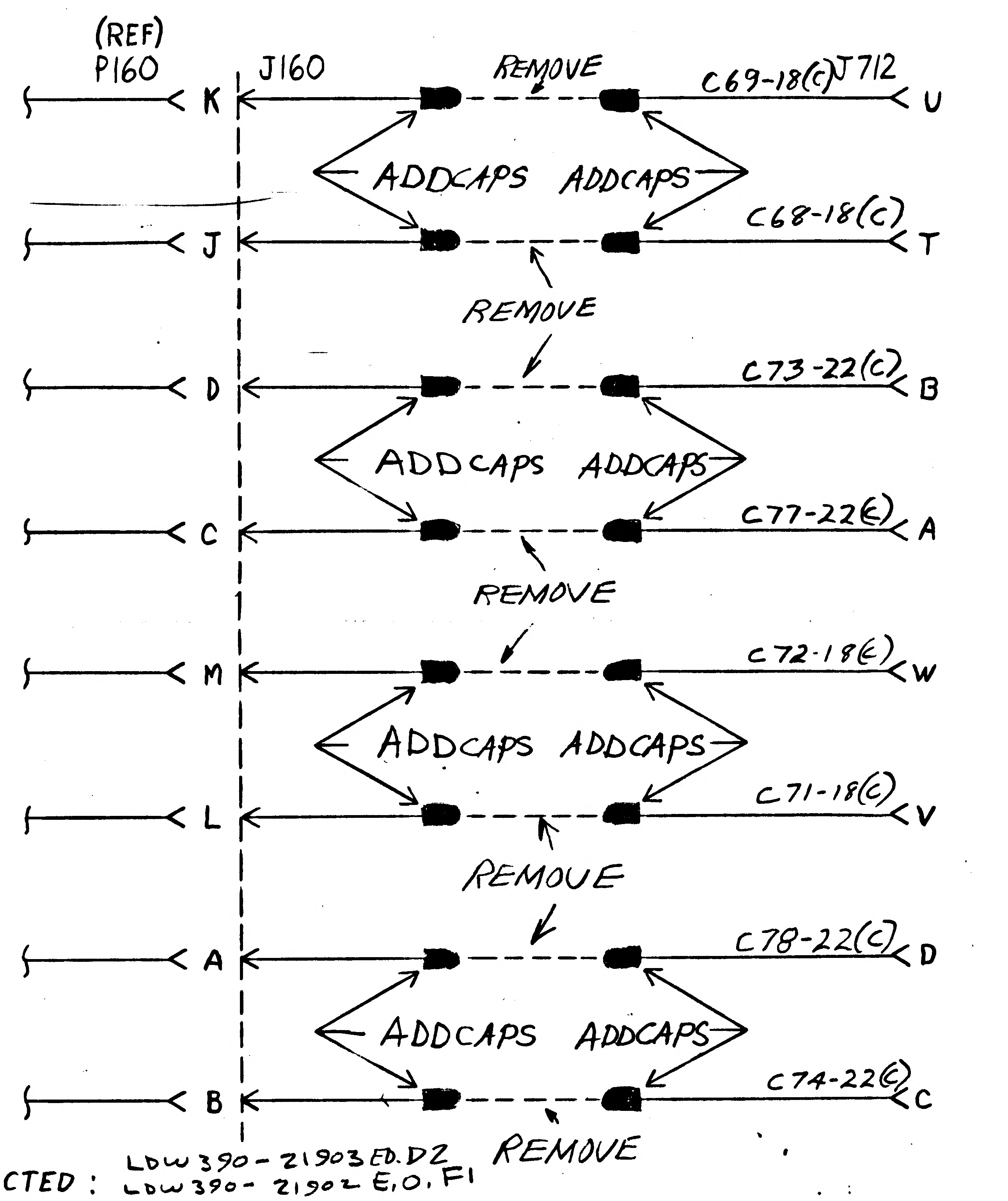

(REF) P160
J160
K
J
D
C
M
L
A
B
REMOVE
ADDCAPS
ADDCAPS
J712
C69-18(C)
U
C68-18(C)
T
REMOVE
C73-22(C)
B
ADDCAPS
ADDCAPS
C77-22(C)
A
REMOVE
C72-18(C)
W
ADDCAPS
ADDCAPS
C71-18(C)
V
REMOVE
C78-22(C)
D
ADDCAPS
ADDCAPS
C74-22(C)
C
REMOVE

CABLES AFFECTED : LDW390-21903 EO. D2
LDW390-21902 E.O. F1
LDW390-52788 EO. B6

PANELS AFFECTED : None [illegible] for J. D.

DWG AFFECTED :

LEVEL 3 DWG CHANGE ORDER
FOR ENGRG INFO ONLY

DETAIL SPEC REQ		CL II ENGRG CHG		CL I ENGRG CHG		CCA 400

REASON FOR EO: CCA 400 LCR 547 LMP DEACTIVATION OF S-BD XREC/PWR AMP

DESCRIPTION OF EO: AT J160 & P160 CUT, CAP & STOW WIRES, AT PIN'S K, J, D, C, M, L, A & B. AT P160/J160 PINS E & F ADDED JUMPER WIRES.

WP 5 GAEC EO RELEASE

MODEL	PROCURING ACTIVITY NO.	GAEC UNIT NO.	SUB CONTR UNIT NO.
LM		LM-2 (32)	

DRAWING CHANGE REQD: REVISE DWG	RECORD EO	DISPOSITION OF PARTS: REWORK	SCRAP	APPROVED BY	DATE
✓		NOT REQ'D			2

~~SUBCONT~~	~~RELIAB. GROUP~~	~~GROUP LEADER~~	~~STRESS GROUP~~	LIAISON ENGRG	PROJ ENGRG	~~GOVT~~
CCS	LTC	DHH		RP	Plunkett	
KS H 11/18/66	11/18			S/S PRJT	18 Nov	11-21-66

PRIORITY: E

DRAWING TITLE: SCHEMATIC LEVEL 3 LM-2 COMMUNICATION SUB-SYSTEM

DRAWING NO.: LDW380-52000

EO NO.: A7

ISSUED BY A.FERRARA / R.LALONDE X6509 SECTION LTC GROUP NO. 267 PL 35

LDW280-52001A

MODEL OR END ITEM	NEXT ASSY	MODULE OR SER NO.	REQD PER MODULE OR END ITEM
LM	LDW280-52000	LM-2(32)	1
PART NO. LDW280-52001-1		GAEC SCH NO.	

5

SH REV STATUS: FOR DESCRIPTION OF REV SEE SUBQ SH

SHEET	1.00	1.10	1.11		2.00	2.01	2.02	3.00	
REV	A	A	A		A	A	A	A	
SHEET									
REV									
SHEET									
REV									

LAST SECT LTR USED A

LAST DASH NO. USED -1

GRUMMAN REL^C INFO \A

PRIM NO. JK(012)

201 ME-16A-1/8/9

UNLESS OTHERWISE SPECIFIED DIMENSIONS ARE IN INCHES.
TOLERANCE UNLESS SPECIFIED
FRACTIONS - DECIMALS - ANGLES
~ ~ ~

ORIG DWG AUTH
DETAIL SPEC REQUIREMENT
CLASS II ENGRG CHANGE
CLASS I ENGRG CHANGE

CONTRACT NO. NAS 9-1100
LINE ITEM 1
DOCUMENTATION TYPE II

DRAWN BY GENTILE 9-22-66
LAYOUT BY G.WHISTON
CHECKED BY EG 9-28-66
GR.LDR
V.D.I W.R.BISCHOFF 10/13
STRUCT

CREW.PROV 10/15/66
PROJ ENGR 10-15
REL GROUP 10/17/66
INSTR

GRUMMAN AIRCRAFT ENGRG CORP
BETHPAGE, L. I., NEW YORK

FINAL ASSEMBLY
ASCENT-STAGE

SIZE B
CODE IDENT NO. 26512
LDW280-52001 A
SCALE NONE
SHEET 1.00 OF 7

ENG 77.1 12-65

CDR 10/15/66

01

NAS 9-1100

REVISIONS FOR CONTINUATION OF REVISIONS SEE SHEET 1.11

CHANGE LTR	ITEM NO.	SHEET NO.	ZONE	GRUMMAN INFO ONLY	DET SPEC	CLASS I	CLASS II	ENGRG ORDER	DESCRIPTION	EFFECTIVITY	DISPOSITION OF EXISTING PARTS		CHANGED BY AND DATE	ENGRG APPD	GOVT APPD
											REWORK	SCRAP			
A	1	1.00, 1.10 2.01 & 3.00	1.C 2B 2C					EO A1 LCD 459	ON-1, ADDED LDW280-52886-1, LDW280-51888-1 & LDW 280-51890-1 INSTAL'S AND NOTES #1 & #2. ADDED SH. 1.10.	LM-2	✓		D'AVELLA 1-11-68		
	2						✓	EO A2	ON-1, DELETE LDW280-52356-3, -5, -7 & -9 INSTL. (NOT APPLICABLE -NOT ON DWG)	NOT REQD	NOT	REQD			
	3	2.01 & 3.00	1C 2B					EO A3	REF. EO. A1, ON-1 & IN NOTE #1: LDW280-51888-3 (WAS) -1.	LM-2	✓				
	4	3.00	1B,C 3A				✓	EO A4	ON-1, ADDED DETAIL "A" SHOWING SAFETY WIRING.						
	5	2.01 & 3.00	5A			✓		LEO 280-598 LCD-1249, CAA455	ON-1, ADDED LDW280-52901 HANDRAIL INSTL.						
	6	2.00 & 3.00	4B				✓	EO A6 LCD 1714	FOR-1, ADDED LDW280-51150-5. DELETED LDW280-51150-1						
	7	3.00	1C				✓	EO A7 LCD459	REF. EO A1, ADDED TO NOTE #1, "AFTER AN ACCEPTABLE ALIGNMENT--- FINGER TIGHT".						
	8	2.01 & 3.00	2B		✓			EO A8	ON-1, REMOVED LDW280-51888-3 (1). ES						
	9	201, 300	5B		✓			EO A9	ON-1: ADDED LDW 360-21295-3 (1) (REF: EO B7 AGAINST LDW 360-21295) FV	LM-2	✓		REDLICH 11-20-68		
	10	2.01 3.00							IN FLD/DWG & B/M ON-1: ADDED LDW280-52364-1 (1), EFF LM-2 (REF LDW280-52364 (10/27/66) INITIAL RELEASE)	LM-2	✓		HERB. SCHWETER 12-20-68		
	11	2.00 3.00	3A				✓	LCD 1202	IN FLD/DWG & B/M ON-1: DELETED LDW270-21011-1 (1) (REF LDW270-21011 EO C4.)						
	12	2.01 3.00	3C						IN FLD/DWG & B/M ON-1: DELETED LDW360-21271-7(1) (REF LDW360-21271 LM-2 EFF REMOVED ON "A" CHANGE)						
	13	2.02 3.00	3C						IN FLD/DWG & B/M ON-1: ADDED LDW360-28271-3 (1), EFF LM-2. (REF LDW360-28271 (10/19/66) INITIAL RELEASE) ADDED SH 2.02						
	14	2.02 3.00	2C 3B				✓		IN FLD/DWG & B/M ON-1: ADDED LDW360-52274-5 & -7 AND -9 (1 EA), EFF LM-2 (REF: LDW360-52274 EO B3 FOR-7 & EO C5 FOR-5 & -9)						

CHG APPROVED

LTR	GROUP LDR	V.D.I.	STRUCT	CREW. PROV
A	FR 12-3			

GRUMMAN AIRCRAFT ENGRG CORP., BETHPAGE, L. I., NEW YORK

SIZE	CODE IDENT NO.		
B	26512	LDW280-52001	A

SCALE NONE

SHEET 1.10

ENG 77.16 3-66

01

NAS 9-1100

REVISIONS

FOR CONTINUATION OF REVISIONS SEE SHEET ______

CHANGE LTR	ITEM NO.	SHEET NO.	ZONE	GRUMMAN INFO ONLY	DET SPEC	CLASS I	CLASS II	ENGRG ORDER	DESCRIPTION	EFFECTIVITY	DISPOSITION OF EXISTING PARTS		CHANGED BY AND DATE	ENGRG APPD	~~GOVT~~ APPD
											REWORK	SCRAP			
A	15	2.01 3.00	2B 2C 6A 7A				✓		IN FLD/DWG & B/M ON-1=DELETED LDW360-21274-1 (1EA) EFF LM-2 (REF LDW360-21274 EOC2) ADDED SH 1·11	LM-2	✓		HERB. SCHWETER 12-20-68	1/7/69	1-8-69
	16	2.02 3.00	2B 2C 6A 7A						IN FLD/DWG & B/M ON-1 = LDW360-51285-1,-2,-5 &-9 (1EA) WAS LDW360-52285-1,-2,-5 &-6 (1EA) DWG ERROR CORRECTION (REF LDW360-51285 EO A1 RELEASE & CHANGE A2)						
	17	2.02 3.00	3A				✓	LCD2653	IN FLD/DWG & B/M ON-1 = ADDED LDW360-52316-1 (1), EFF LM-2 (REF LDW360-52316 (3/12/68) INITIAL RELEASE						
	18	2.01						Ⓔ	IN B/M ON-1=DELETED LDW360-28267-1(1), EFF LM-2. (REF DCRF 323-1156, 9/19/66) 12-24-68						

CHG APPROVED	LTR	GROUP LDR	VEH DES INT	STRUCTURES	CREW PROV
	A	SDR	12/23/68	1/6/69	

GRUMMAN AIRCRAFT ENGRG CORP., BETHPAGE, L. I., NEW YORK

SIZE B
CODE IDENT NO. 26512
LDW280-52001 A
SCALE NONE
SHEET 1·11

ENG 77.16 3-66

01

NAS 9-1100

QTY PER ASSEMBLY	-1	CODE IDENT	PART NO.	I&T	NOMENCLATURE OR DESCRIPTION	MATERIAL	GOVT SPEC	COML SPEC	STOCK SIZE	PROCESS SYM	FINISH NO.	ZONE
	1		LDW280-52350-1	E	LINES INSTL PROPUL	SEE DWG						4A
	1		LDW280-52360-1	E	LINES INSTL. EL AEB.	SEE DWG						3B
	1		↑ -52359-1	↑	LINES INSTL EL M/S EXT	↑						5B
	1		-52358-1		LINES INSTL. EL M/S INT							3B
	1		-52357-1		LINES INSTL. ELEC. CAB							5C
	1		-52356-1		LINES INSTL R.C.S.							4B
	1		-52355-3		LINES INSTL ECS AEB							3B
	1		-52355-1		LINES INSTL ECS AEB.							3B
	1		-52354-1		LINES INSTL ECS M/S EXT							4C
	1		-52353-3		LINES INSTL ECS M/S INT							4C
	1		-52353-1		LINES INSTL ECS M/S INT							4C
	1		↓ -52352-3		LINES INSTL ECS · CAB.							5B
	1		LDW280-52352-1		LINES INSTL ECS CAB.							5B
	1		LDW280-52351-1		LINES INSTL HEL PRESS							3C
	1		LDW280-52002-1		STRUT. ASSY A/S							6B
	1		LDW280-51450-1		SHLD INSTL AFT E/B							3B
	1		LDW280-51173-1		SHLD BLKT. INSTL CAB							4B
	1		LDW280-51150-5		SHLD INSTL A/S M/S							4B
	1		LDW280-28363-1		EMERG. STEAM VENT INSTL							3C
	1		LDW270-52200-1		A/S PROP PRESS INSTL							3C
	1		LDW270-51401-11		A/S DISC. INSTL.							3B
	1		↑ -51401-9		↑							3C
	1		-51401-7									7A
	1		-51401-3		↓							2C
	1		-51401-1		A/S DISC INSTL							2B
	1		↓ -51010-1	↓	A/S ENGINE INSTL	↓						7A
	1		LDW270-28012-3	E	DUAL SOL. VALVE INSTL	SEE DWG						7A
			LDW280-52001-1	S	FINAL ASSY					NONE	NONE	7A

SYM OR NO.	PROCESS OR FINISH	GRUMMAN SPEC OR MILITARY SPEC	SYM OR NO.	PROCESS OR FINISH	GRUMMAN SPEC OR MILITARY SPEC	SYM OR NO.	PROCESS OR FINISH	GRUMMAN SPEC OR MILITARY SPEC

I&T: IDENTIFICATION AND TRACEABILITY IN ACCORDANCE WITH: LPC·19·2 (GAEC) LPC·19-3 (VENDOR)

GRUMMAN AIRCRAFT ENGRG CORP, BETHPAGE, L. I., NEW YORK

SIZE B
CODE IDENT NO. 26512
LDW280-52001
A

SCALE NONE
SHEET 2.00
A

ENG 77.2 7-65

01

NAS 9-1100

QTY PER ASSEMBLY -1	CODE IDENT	PART NO.	I&T	NOMENCLATURE OR DESCRIPTION	MATERIAL	GOVT SPEC	COML SPEC	STOCK SIZE	PROCESS SYM	FINISH NO.	ZONE
1		LDW360-21295-3	E	AMPLIFIER INSTL	SEE DWG						5B
1		LDW280-52901-3	E	HANDRAIL INSTL	SEEDWG						5A
1		LDW280-52886-1	E	SUPPORT INSTL. FUEL TANK	SEE DWG						2B
1		V28-575 201	E	DOCKING DROGUE	NORTH AMERICAN AVIATION (GFE)						3B
1		LDW280-51890-1	E	SUPPORT INSTL. OX. TANK	SEE DWG						2C
1		LDW390-51006-1	E	EQUIP. INSTL E.P.S	SEE DWG						3C
1		LDW380-52010-1		COMM. SUBSYS INSTL							3C
1		LDW360-52400-1		INSTL. ELEC. REPL. ASSY							3B
1		LDW360-52287-1		X-DUCER INSTL CAB. PRESS							3C
1		LDW360-21284-1		VIBRATIONS SYS INSTL							6B
1		LDW360-21283-1		VIBRATIONS SYS INSTL							4C
1		LDW360-21282-3		X-DUCER INSTL ERA RACK							2B
1		LDW360-21281-7		SYS. INSTL. OX TANK A/S							7A
1		LDW360-21281-5		SYS INSTL. OX TANK A/S							7A
1		LDW360-52273-1		X-DUCER INSTL. CAB							4B
1		LDW280-52364-1		LINES INSTL							2C
1		LDW360-21270-1		X-DUCER INSTL ENG. MT							4A
1		LDW360-21266-1		X-DUCER INSTL. ANT.							5B
1		LDW340-52001-1		FINAL ASSY CREW PROV							5A
1		LDW330-52100-1		SUBSYS INSTL E.C.S.							5B
1		LDW310-52001-1		R.C.S. INSTL							3B
1		LDW300-520001	E	G&N SYS. INSTL A/S	SEE DWG						3C
1		LDW360-51267-1	E	ACCELER'R INSTL	SEE DWG						

SYM OR NO.	PROCESS OR FINISH	GRUMMAN SPEC OR MILITARY SPEC	SYM OR NO.	PROCESS OR FINISH	GRUMMAN SPEC OR MILITARY SPEC	SYM OR NO.	PROCESS OR FINISH	GRUMMAN SPEC OR MILITARY SPEC

I&T: IDENTIFICATION AND TRACEABILITY IN ACCORDANCE WITH :
LPC-19-2 (GAEC) LPC-19-3 (VENDOR)

GRUMMAN AIRCRAFT ENGRG CORP, BETHPAGE, L. I., NEW YORK

SIZE	CODE IDENT NO.		
B	26512	LDW280-52001	A

SCALE NONE

SHEET 2.01

Ⓐ

ENG 77.2 7-65

01

NAS 9-1100

QTY PER ASSEMBLY -1	CODE IDENT	PART NO.	I&T	NOMENCLATURE OR DESCRIPTION	MATERIAL	GOVT SPEC	COML SPEC	STOCK SIZE	PROCESS SYM	FINISH NO.	ZONE
1		LDW360-52316-1	E	ACOUSTIC X'DUCER INSTL	SEE DWG						3A
1		LDW360-52274-9		TEMP TRANSDUCER INSTL							3B
1		-7									2C
1		LDW360-52274-5		TEMP TRANSDUCER INSTL							2C
1		LDW360-51285-9		TRANSDUCER INSTL							2C
1		-5									2B
1		-2									7A
1		LDW360-51285-1		TRANSDUCER INSTL							6A
1		LDW360-28271-3	E	SYSTEM INSTL	SEE DWG						3C

SYM OR NO.	PROCESS OR FINISH	GRUMMAN SPEC OR MILITARY SPEC	SYM OR NO.	PROCESS OR FINISH	GRUMMAN SPEC OR MILITARY SPEC	SYM OR NO.	PROCESS OR FINISH	GRUMMAN SPEC OR MILITARY SPEC

I & T: IDENTIFICATION AND TRACEABILITY IN ACCORDANCE WITH :
LPC-19-2 (GAEC) LPC-19-3 (VENDOR)

GRUMMAN AIRCRAFT ENGRG CORP, BETHPAGE, L. I., NEW YORK

SIZE B | CODE IDENT NO. 26512 | LDW280-52001 | A

SCALE NONE | SHEET 2.02

ENG 77.2 7-66

01

NAS 9-1100

01702 NAS 9-1100

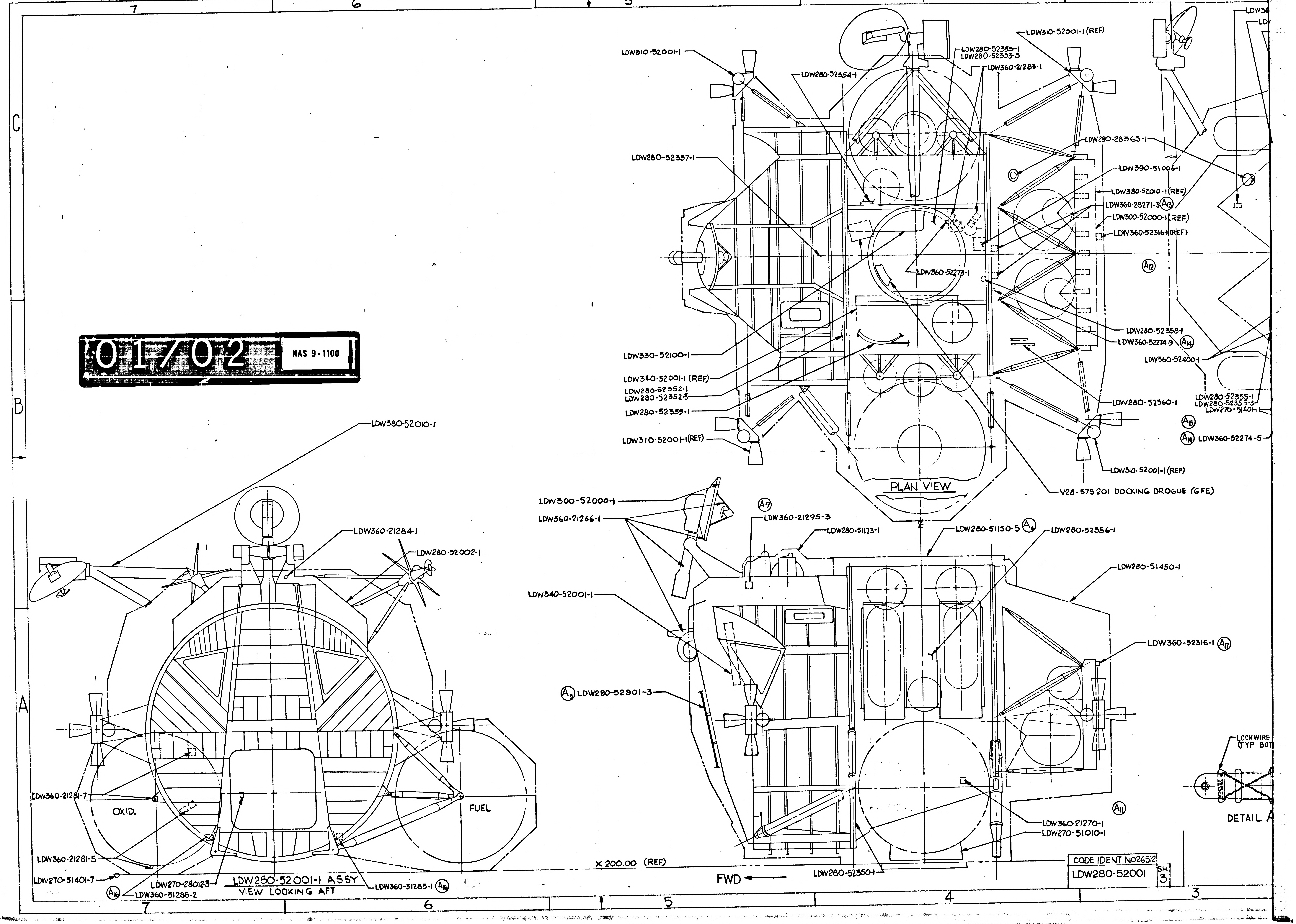
7
6
5
4
3
C
B
A
LDW310-52001-1
LDW280-52354-1
LDW280-52353-1
LDW280-52353-3
LDW360-21288-1
LDW310-52001-1 (REF)
LDW280-52357-1
LDW280-28363-1
LDW390-51006-1
LDW380-52010-1 (REF)
LDW360-28271-3 A13
LDW300-52000-1 (REF)
LDW360-52316-1 (REF)
LDW360-52273-1
A12
LDW330-52100-1
LDW340-52001-1 (REF)
LDW280-52352-1
LDW280-52352-3
LDW280-52359-1
LDW310-52001-1 (REF)
LDW280-52358-1
LDW360-52274-9 A14
LDW360-52400-1
LDW280-52360-1
LDW280-52355-1
LDW280-52355-3
LDW270-51401-11
A15
A14 LDW360-52274-5
LDW310-52001-1 (REF)
V28-575201 DOCKING DROGUE (GFE)
PLAN VIEW
LDW36
LD
LDW380-52010-1
LDW360-21284-1
LDW280-52002-1
LDW360-21281-7
OXID.
FUEL
LDW360-21281-5
LDW270-51401-7
A16 LDW360-51285-2
LDW270-28012-3
LDW280-52001-1 ASSY
VIEW LOOKING AFT
LDW360-51285-1 A16
LDW300-52000-1
LDW360-21266-1
A9
LDW360-21295-3
LDW280-51173-1
LDW280-51150-5 A6
LDW280-52356-1
LDW280-51450-1
LDW340-52001-1
LDW360-52316-1 A17
A5 LDW280-52901-3
A11
LDW360-21270-1
LDW270-51010-1
X 200.00 (REF)
FWD
LDW280-52350-1
LOCKWIRE (TYP BOT
DETAIL A

CODE IDENT NO26512

LDW280-52001 SH 3

2/2

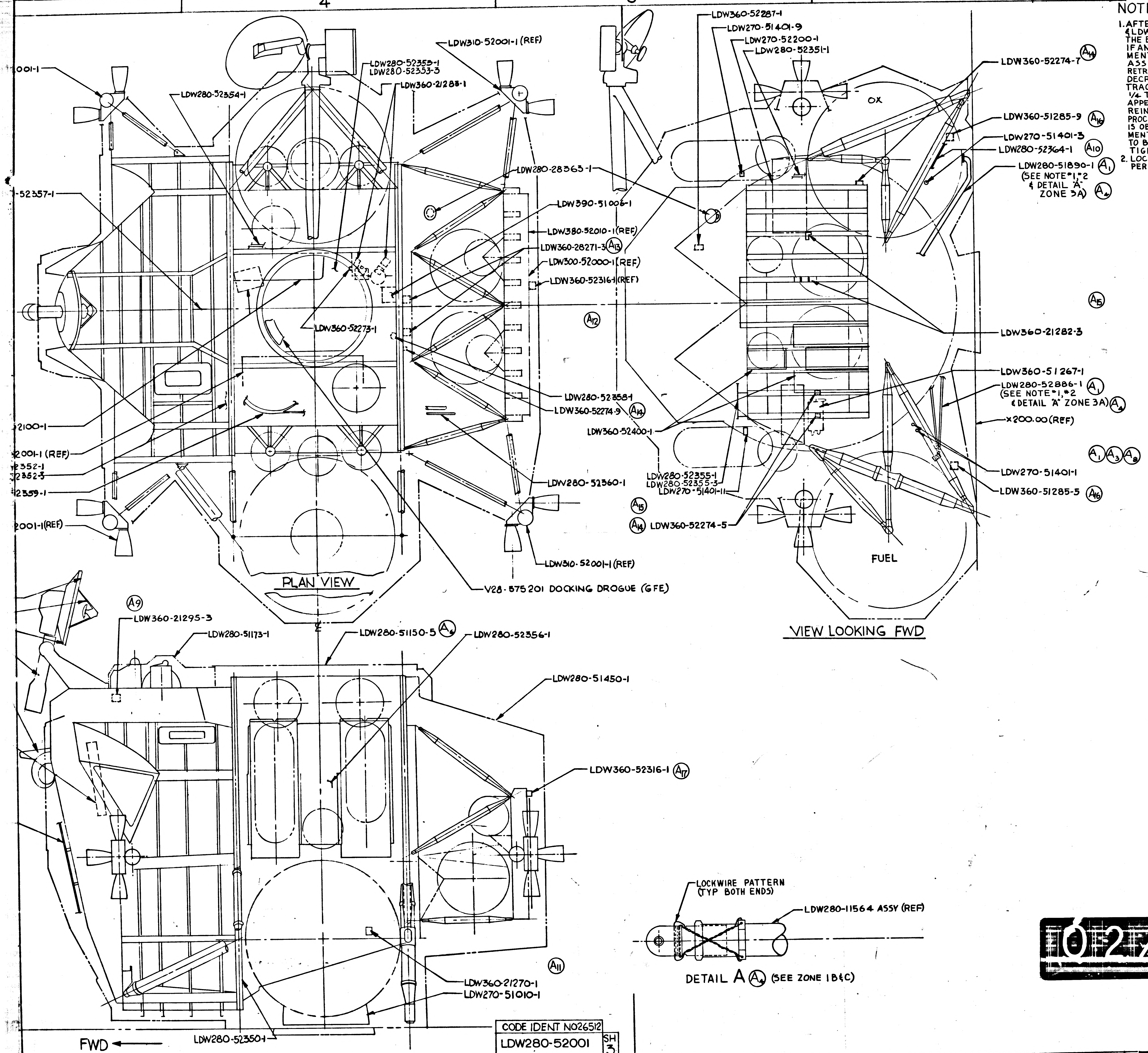
4
3
2
001-1
LDW280-52354-1
LDW310-52001-1 (REF)
LDW280-52353-1
LDW280-52353-3
LDW360-21288-1
-52357-1
LDW280-28363-1
LDW390-51006-1
LDW380-52010-1 (REF)
LDW360-28271-3 (A13)
LDW300-52000-1 (REF)
LDW360-52316-1 (REF)
LDW360-52273-1
(A12)
2100-1
2001-1 (REF)
2352-1
2352-3
2359-1
2001-1 (REF)
LDW280-52358-1
LDW360-52274-9 (A14)
LDW360-52400-1
LDW280-52360-1
LDW280-52355-1
LDW280-52355-3
LDW270-51401-11
(A15)
(A14) LDW360-52274-5
LDW310-52001-1 (REF)
PLAN VIEW
V28-875201 DOCKING DROGUE (GFE)
LDW360-52287-1
LDW270-51401-9
LDW270-52200-1
LDW280-52351-1
OX
LDW360-52274-7 (A14)
LDW360-51285-9 (A16)
LDW270-51401-3
LDW280-52364-1 (A10)
LDW280-51890-1 (A1)
(SEE NOTE *1, *2
& DETAIL "A"
ZONE 3A) (A4)
(A15)
LDW360-21282-3
LDW360-51267-1
LDW280-52886-1 (A1)
(SEE NOTE *1, *2
& DETAIL "A" ZONE 3A) (A4)
X200.00 (REF)
(A1) (A3) (A8)
LDW270-51401-1
LDW360-51285-5 (A16)
FUEL
VIEW LOOKING FWD
(A9)
LDW360-21295-3
LDW280-51173-1
LDW280-51150-5 (A6)
LDW280-52356-1
LDW280-51450-1
LDW360-52316-1 (A17)
(A11)
LDW360-21270-1
LDW270-51010-1
LDW280-52350-1
FWD ←
LOCKWIRE PATTERN
(TYP BOTH ENDS)
LDW280-11564 ASSY (REF)
DETAIL A (A4) (SEE ZONE 1B&C)
C
B
A
4
3
2

CODE IDENT NO 26512
LDW280-52001
SH 3

NOTES:

1. AFTER INSTALLATION OF LDW280-52886-1 & LDW280-51890-1 BELLOWS SUPPORT, INSPECT THE BELLOWS ALIGNMENT PER LEI280-008. IF AN UNACCEPTABLE BELLOWS MISALIGNMENT EXISTS, DETERMINE IF THE TUBE ASSEMBLIES SHOULD BE EXTENDED OR RETRACTED TO MOVE THE BELLOWS FOR A DECREASED MISALIGNMENT. EXTEND OR RETRACT BY ROTATING ONE TUBE AT A TIME 1/4 TURN. WHEN THE BELLOWS MISALIGNMENT APPEARS TO HAVE VISUALLY DECREASED, REINSPECT PER LEI280-008. REPEAT THIS PROCEDURE UNTIL AN ACCEPTABLE ALIGNMENT IS OBTAINED. AFTER AN ACCEPTABLE ALIGNMENT HAS BEEN OBTAINED, JAM NUTS ARE TO BE TIGHTENED 1/4 TURN PAST FINGER TIGHT.
2. LOCKWIRE EACH SUPPORT TUBE END FITTING PER MS33591 AS APPLICABLE.

MANUFACTURING OPERATIONS
UNLESS OTHERWISE SPECIFIED
NOTES CHECKED √ APPLY TO THIS DWG.

PART NUMBER AND ALL OTHER MARKINGS IN REGION MARKED ⊠ USE BOTH SIDES IF NECESSARY.	
FILLET AND INSIDE CORNER RADII TOLERANCES .016R TO .062R ± .010 .063R TO .250R ± .015 OVER .250R ± .030	
DEPTH SHOWN FOR TAPPED HOLES IS FULL THDS. 2-3 IMP THDS. BEYOND PERMISSIBLE.	
EXTERNAL THREAD LENGTH SHOWN INCLUDES 2 IMPERFECT THREADS MAX.	
DO NOT CADMIUM PLATE & PAINT HOLES OR SURFACES MARKED WITH DOUBLE ASTERISK.	
MISMATCH STEP OF ± .005 PERMISSIBLE DUE TO CHANGE OF CUTTERS AT INSIDE INTERSECTING SURFACES.	
DIAMETERS MARKED MUST BE CONCENTRIC WITHIN FULL INDICATOR READING	
HOLES MUST BE KEPT FREE OF CHROME PLATING SOLUTION.	
ALL DIMENSIONS SHOWN TO BE MET AFTER CADMIUM PLATING. THICKNESS OF PLATE .0003 MIN. TO .0005 MAX. MIN. THICKNESS TO BE .0002 ON THREADED AREAS. NO ALLOWANCE FOR PLATING IN HOLES	
125 √ SURFACE ROUGHNESS INCLUDING REAMED HOLES PER MIL-STD-10	
200 √ FOR ALL DRILLED HOLES	
REMOVE ALL BURRS. BREAK ALL EDGES .015-.031	
INSPECTION INFORMATION MINIMUM PERMISSIBLE AVERAGE EDGE DISTANCE MARKED IS	
SYMBOL ƒ DENOTES SURFACE TO BE MACHINED	
UNLESS OTHERWISE SPECIFIED TOLERANCE ON FLANGES IS ± 1/32	
LENGTHS OF AN, NAS & MS AL ALY RIVETS SHORTER THAN 1 INCH ARE NOT SPECIFIED.	
TOLERANCE ON LOFTED DELINEATIONS IS	

DWG SIZE 34 X 70

PRINTING INFO ONLY
FULL SIZE SHEET AREA (36 X 72) — 18.0 SQ. FT.
1/2 SIZE SHEET AREA (1/4 OF FULL) — 4.5 SQ. FT.

PRINT TRIM LINE

LDW280-52001 A

LDW280-52001 A

02/02

NAS 9-1100

	GRUMMAN AIRCRAFT ENGRG CORP., BETHPAGE, L. I., NEW YORK			
LM	SIZE J	CODE IDENT NO. 26512	LDW280-52001	A
MODEL OR END ITEM	SCALE NONE		SHEET 3.00	

THIS IS AN ORIGINAL DRAWING

2FR

ENG 32.1 REV 3-65

GRUMMAN AIRCRAFT ENGINEERING CORP.
CODE IDENT NO. 26512
ENGINEERING ORDER

DWG. NO. LDW280-52001
EO NO. A1
CONTROL INFO NO. LDW280A-3165

IN F/D & B/M ADD 1 EACH OF THE FOLLOWING TO -1

LDW280-52886-1	SUPPORT INSTALLATION FUEL TANK BELLOWS INBRD.
LDW280-51888-1	SUPPORT INSTALLATION FUEL TANK BELLOWS OUTBOARD
LDW280-51890-1	SUPPORT INSTALLATION OX. TANK BELLOWS INBRD.

IN F/D ADD NOTE * & **

* AFTER INSTALLATION OF LDW280-52886-1, LDW280-51888-1 & LDW280-51890-1 BELLOWS SUPPORT, INSPECT THE BELLOWS ALIGNMENT PER LEI280-008. IF AN UNACCEPTABLE BELLOWS MISALIGNMENT EXISTS, DETERMINE IF THE TUBE ASSEMBLIES SHOULD BE EXTENDED OR RETRACTED TO MOVE THE BELLOWS FOR A DECREASED MISALIGNMENT. EXTEND OR RETRACT BY ROTATING ONE TUBE AT A TIME 1/4 TURN. WHEN THE BELLOWS MISALIGNMENT APPEARS TO HAVE VISUALLY DECREASED, REINSPECT PER LEI280-008. REPEAT THIS PROCEDURE UNTIL AN ACCEPTABLE ALIGNMENT IS OBTAINED.

** LOCKWIRE EACH SUPPORT TUBE END FITTING PER MS33591 AS APPLICABLE

(*, ** USE NEXT NUMBER)

DETAIL SPEC REQ ☐ CL II ENGRG CHG ☐ CL I ENGRG CHG ☐ LCR 459 5

REASON FOR EO: TO ADD BELLOWS SUPPORT INSTAL'S. AND SUPPORT TUBE ADJUSTMENT NOTE.

DESCRIPTION OF EO: CN-1 ADDED LDW280-52886-1, -51888-1 & -51890-1 INSTAL'S AND NOTES *, ** (SEE ABOVE)

GAEC C EO RELEASE: LE 11/22

MODEL	EFFECTIVITY: PROCURING ACTIVITY NO.	GAEC UNIT NO.	SUB CONTR UNIT NO
LM		LM-2 (32)	

DRAWING CHANGE REQD: REVISE DWG ✓ RECORD EO

DISPOSITION OF PARTS: REWORK ✓ SCRAP

APPROVED BY							ow	RMc	
DATE	11/10/66				11/10/66	11-11		11-14-66	11/17/66
/	VD1	SUPPORT	RELIAB. GROUP	~~GROUP LEADER~~	STRESS GROUP	LIAISON ENGRG	PROJ ENGRG		

PRIORITY: C

DRAWING TITLE: FINAL ASSEMBLY ASCENT STAGE

DRAWING NO: LDW280-52001

EO NO.: A-1

ISSUED BY VALENTINE 11/8/66 X 1441 SECTION VD1 (PHILLIPS) GROUP NO. 335 PL 35

01 NAS 9-1100

ENG 32.1 REV 3-65

*

GRUMMAN AIRCRAFT ENGINEERING CORP.
CODE IDENT NO. 26512
ENGINEERING ORDER

DWG. NO. LDW280-52001 | EO NO. A3
CONTROL INFO NO. LM-5-11532

THIS EO IS A REVISION OF EO A1

IN F/D, B/M, & NOTE *: LDW280-51888-1 S/B -3

RELEASED BY LIAISON

5

DETAIL SPEC REQ		CL II ENGRG CHG		CL I ENGRG CHG	

REASON FOR EO	DESCRIPTION OF EO	GAEC C EO RELEASE
REVISE DWG. TO AGREE WITH SUB-ASSY PART MODIFICATION	REF EO A1, ON -1 & IN NOTE *: LDW280-51888 -3 WAS -1.	

MODEL	EFFECTIVITY		
	PROCURING ACTIVITY NO.	GAEC UNIT NO.	SUB CONTR UNIT NO.
LM		LM-2 (32)	

DRAWING CHANGE REQD		DISPOSITION OF PARTS	
✓		✓	
REVISE DWG	RECORD EO	REWORK	SCRAP

APPROVED BY	WT			~	NM	DV	RM	
DATE	1/3/66			~	1-3-67	1/3	1-6-67	1/4/67
1	VDI	SUPPORT	RELIAB. GROUP	GROUP LEADER	STRESS GROUP	LIAISON ENGRG	PROJ ENGRG	~~SOFT~~

PRIORITY	DRAWING TITLE	DRAWING NO.	EO NO.
C	FINAL ASSY A/S	LDW280-52001	A3

ISSUED BY A. WILSON/P. GRUND X454 12-31-66 SECTION VDI GROUP NO. 335 PL 5

01

NAS 9-1100

ING 32.2 REV 3-65

GRUMMAN AIRCRAFT ENGINEERING CORP.
CODE IDENT NO. 26512
ENGINEERING ORDER

DWG. NO. LDW280-52001		EO NO. A4	
CONTROL INFO NO. LM 5-12898			

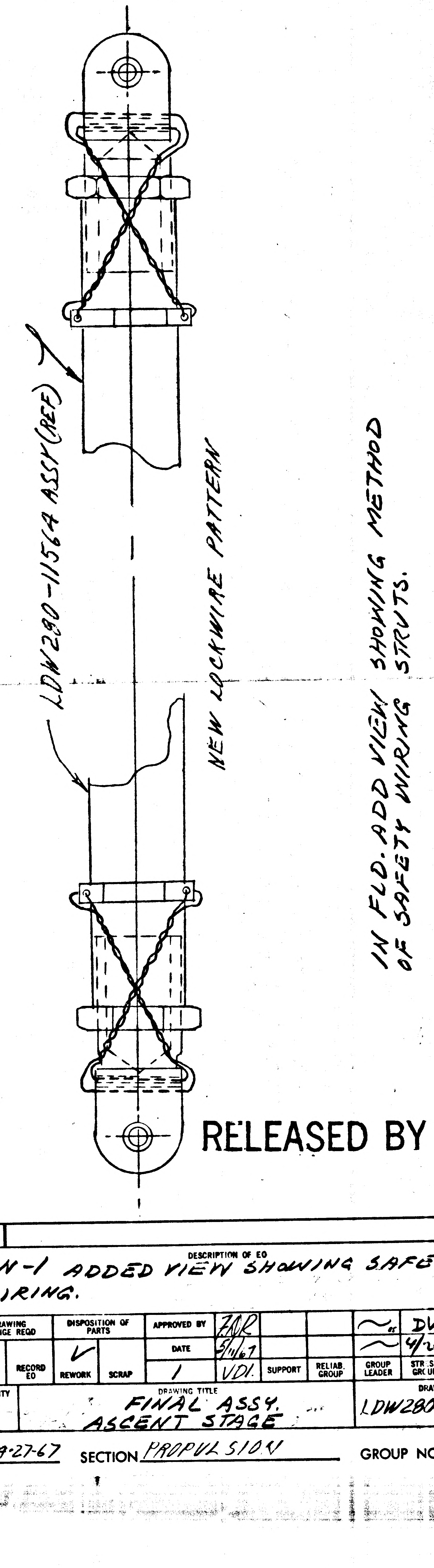

IN FLD. ADD VIEW SHOWING METHOD OF SAFETY WIRING STRUTS.

RELEASED BY LIAISON

DETAIL SPEC REQ		CL II ENGRG CHG	✓	CL I ENGRG CHG										5
REASON FOR EO					DESCRIPTION OF EO									GAEC C EO RELEASE
TO CLARIFY LOCKWIRE PATTERN					ON-1 ADDED VIEW SHOWING SAFETY WIRING.									JK 05 025
MODEL	EFFECTIVITY				DRAWING CHANGE REQD		DISPOSITION OF PARTS		APPROVED BY	ZAR			~ DV	EJB DAM ✓
	PROCURING ACTIVITY NO.	GAEC UNIT NO.	SUB CONTR UNIT NO.		✓		✓		DATE	5/11/67			~ 4/29	4/28/67 5-2-67 4-28-67
LM		LM-2 (32)			REVISE DWG	RECORD EO	REWORK	SCRAP	1	VDI.	SUPPORT	RELIAB. GROUP	GROUP LEADER / STRESS GROUP	LIAISON ENGRG / PROJ ENGRG
					PRIORITY C		DRAWING TITLE FINAL ASSY. ASCENT STAGE						DRAWING NO. LDW280-52001	EO NO. A4

ISSUED BY LIAISON J.PAULSEN X6216 4-27-67 SECTION PROPULSION GROUP NO. 280 PL 5

01

NAS 9-1100

ENG 32.1 REV 3-65

B

GRUMMAN AIRCRAFT ENGINEERING CORP.
CODE IDENT NO. 26512
ENGINEERING ORDER

~~DWG~~ E.O. NO. LEO 280
EO NO. 598
CONTROL INFO NO. LDW280A-6687

ON -1 OF THE FOLLOWING DWGS ADD LDW280-52901-3 FOR LM2(32) & -1 FOR LM3(33) THROUGH LM15(45).

DWG. NO	ADD	EFFECT.	CHG. NO
LDW280-52001✓	LDW280-52901-3 HANDRAIL INSTL	LM-2 (32)	A5
LDW280-53001✓	LDW280-52901-1 HANDRAIL INSTL	LM-3 (33)	A5
LDW280-54001✓	LDW280-52901-1 HANDRAIL INSTL	LM-4 (34) THRU LM-15 (45)	A2

DETAIL SPEC REQ ☐ CL II ENGRG CHG ☐ CL I ENGRG CHG ☑ LCD-1249, CCA455 5

REASON FOR EO: TO ADD HANDRAIL INSTL. TO ITS N/A.

DESCRIPTION OF EO: ON -1 ADDED LDW280-52901 HANDRAIL INSTL.

Ⓡ GAEC EO RELEASE Ⓒ JK 5/17/67

MODEL	EFFECTIVITY: PROCURING ACTIVITY NO.	GAEC UNIT NO.	SUB CONTR UNIT NO.
LM		NOTED	

DRAWING CHANGE REQD: REVISE DWG	RECORD EO	DISPOSITION OF PARTS: REWORK	SCRAP
✓		✓	

APPROVED BY	Jef			JLR	Wm Mjr		Dam	Bo
DATE	5/1/67			5/1/67	5/10/67		5/16/67	5-16-67
2	V.D.I.	SUPPORT	RELIAB. GROUP	GROUP LEADER	STRESS GROUP	LIAISON ENGRG	PROJ ENGRG	

PRIORITY: C
DRAWING TITLE: ASCENT STAGE ASSY
E.O. ~~DRAWING~~ NO.: LEO 280
EO NO.: 598

ISSUED BY E. STAHL 5-1-67 X7033 SECTION V.D.I. GROUP NO. 335 PL 25

0 1

NAS 9-1100

B

ENG 32.1 REV 3-65

GRUMMAN AIRCRAFT ENGINEERING CORP.
CODE IDENT NO. 26512
ENGINEERING ORDER

DWG. NO. LDW280-52001 EO NO. A6
CONTROL INFO NO. LDW280A7959

IN F/D & B/M FOR -1:

DELETE LDW280-51150-1 SHIELDING INSTALLATION &

ADD LDW280-51150-5 SHIELDING INSTALLATION.

DETAIL SPEC REQ		CL II ENGRG CHG	✓	CL I ENGRG CHG	LCD 174 OK

REASON FOR EO: THERMAL SHIELD CUT-OUT REVISED FOR LARGER WATER BOILER DUCT.

DESCRIPTION OF EO: FOR -1. ADDED LDW280-51150-5 DELETED LDW280-51150-1

Ⓡ GAEC EO RELEASE C JL 7-13-7

MODEL	EFFECTIVITY: PROCURING ACTIVITY NO.	GAEC UNIT NO.	SUB CONTR UNIT NO.
LM		LM-2(32)	

DRAWING CHANGE REQD: REVISE DWG ✓ RECORD EO

DISPOSITION OF PARTS: REWORK ✓ SCRAP

	YDI	SUPPORT	RELIAB. GROUP	GROUP LEADER	STRESS GROUP	LIAISON ENGRG	PROJ ENGRG	
APPROVED BY				FDR				
DATE	7/10/67			7/10/67	7/11/67		7/11/67	7/12/67

PRIORITY: C

DRAWING TITLE: FINAL ASSEMBLY ASCENT STAGE

DRAWING NO. LDW280-52001 EO NO. A6

ISSUED BY E BADE X7033 7/1/67 SECTION VEH-DES. INT GROUP NO. 335 PL 25

01 ✓ NAS 9-1100

ENG 32.1 REV 3-65

GRUMMAN AIRCRAFT ENGINEERING CORP.
CODE IDENT NO. 26512
ENGINEERING ORDER

DWG. NO. LDW280-52001
EO NO. A7
CONTROL INFO NO. LM-5-17141

THIS IS A REVISION OF EO A1

ADD TO NOTE *: AFTER AN ACCEPTABLE ALIGNMENT HAS BEEN OBTAINED, JAM NUTS ARE TO BE TIGHTENED 1/4 TURN PAST FINGER TIGHT.

RELEASED BY LIAISON

DETAIL SPEC REQ ☐ CL II ENGRG CHG ☑ CL I ENGRG CHG ☐ LCR 459

REASON FOR EO: TO ADD BELLOWS SUPPORT INSTAL'S AND SUPPORT TUBE ADJUSTMENT NOTE

DESCRIPTION OF EO: REF EO A1 ADDED TO NOTE * "AFTER AN ACCEPTABLE ALIGNMENT---FINGER TIGHT."

Ⓔ GAEC EO RELEASE 5 4 JK

MODEL	EFFECTIVITY: PROCURING ACTIVITY NO.	GAEC UNIT NO.	SUB CONTR UNIT NO.
LM		LM-2 (32)	

DRAWING CHANGE REQD: REVISE DWG ✓ RECORD EO
DISPOSITION OF PARTS: REWORK ✓ SCRAP

APPROVED BY	Jap			—	JF	CH	WRB	
DATE	10/19/67			—	10-18-67	10-18-67	10/19/67	10-18-67
	VDI	SUPPORT	RELIAB. GROUP	GROUP LEADER	STRESS GROUP	LIAISON ENGRG	PROJ ENGRG	

PRIORITY: C
DRAWING TITLE: FINAL ASSEMBLY ASCENT STAGE
DRAWING NO. LDW280-52001
EO NO. A7

ISSUED BY LIAISON - J. Mc GILL X-86755 SECTION VDI GROUP NO. ____ PL 25

01 NAS 9-1100

GRUMMAN AIRCRAFT ENGINEERING CORP.
CODE IDENT NO. 26512
ENGINEERING ORDER

ENG 32.1 REV 3-65

DWG. NO. LDW280-52001 EO NO. A8
CONTROL INFO NO. LDW280B1032

IN F/D & B/M FOR -1 ASSEMBLY:

REMOVE LDW280-51888-3 INSTALLATION (1)

DETAIL SPEC REQ ✓ | CL II ENGRG CHG ☐ | CL I ENGRG CHG ☐

(5)

REASON FOR EO	DESCRIPTION OF EO	GAEC EO RELEASE
INSTALLATION PREVIOUSLY INSTALLED (CDR LIST)	ON -1 REMOVED LDW280-51888-3 (1)	JK 1/5 8

MODEL	EFFECTIVITY: PROCURING ACTIVITY NO.	EFFECTIVITY: GAEC UNIT NO.	EFFECTIVITY: SUB CONTR UNIT NO.
LM		LM-2(32)	

DRAWING CHANGE REQD: REVISE DWG	DRAWING CHANGE REQD: RECORD EO	DISPOSITION OF PARTS: REWORK	DISPOSITION OF PARTS: SCRAP
✓		✓	

	VDI	SUPPORT	RELIAB. GROUP	GROUP LEADER	STRESS GROUP	LIAISON ENGRG	PROJ ENGRG	~~[illegible]~~
APPROVED BY	JAS			FDR	BM		JAP	Botti
DATE	1/3/68			1-3-68	1-3		1/3/68	1-5-68

PRIORITY	DRAWING TITLE	DRAWING NO.	EO NO.
C	FINAL ASSEMBLY-ASCENT STAGE	LDW280-52001	A8

ISSUED BY F. BADE X7033 SECTION VEH. DES. INT. GROUP NO. 335 PL 25

01

NAS 9-1100

ENG 32.1 REV 3-65

GRUMMAN AIRCRAFT ENGINEERING CORP.
CODE IDENT NO. 26512
ENGINEERING ORDER

DWG. NO. LDW280-52001
EO NO. A9
CONTROL INFO NO. LDW280B4830

IN F/D & B/M ON -1 ASSEMBLY:-

ADD LDW360-21295-3 AMPLIFIER INSTALLATION; - 1 REQ'D/VEHICLE.

DETAIL SPEC REQ	✓	CL II ENGRG CHG		CL I ENGRG CHG	

(5)

REASON FOR EO: TO ADD R/R VIBRATION AMPLIFIER PREVIOUSLY CALLED OUT IN ERROR ON LDW280-52081

DESCRIPTION OF EO: ON-1: ADDED LDW360-21295-3 (1) (REF. EO B7 AGAINST LDW360-21295)

GAEC EO RELEASE: JK 8/5/

MODEL	EFFECTIVITY: PROCURING ACTIVITY NO.	GAEC UNIT NO.	SUB CONTR UNIT NO.
LM		LM-2(32)	

DRAWING CHANGE REQD: REVISE DWG	RECORD EO	DISPOSITION OF PARTS: REWORK	SCRAP
✓		-5	

APPROVED BY	JAS			FDR/gv	W/H		Bott		
DATE	7/26/68			7/24/68	7/26/68		8/5/68	8-5-68	
—	VDI	SUPPORT	RELIAB. GROUP	GROUP LEADER	STRESS GROUP	LIAISON ENGRG	PROJ ENGRG		

PRIORITY: C

DRAWING TITLE: FINAL ASSEMBLY- ASCENT STAGE

DRAWING NO.: LDW280-52001

EO NO.: A9

ISSUED BY F. BADE X7033 SECTION VEH. DES. INT GROUP NO. 335 PL 25

01 NAS 9-1100

REVISIONS

CHANGE LTR	ITEM NO.	SHEET NO.	ZONE	SH CHG LTR	GRUMMAN INFO ONLY	DET SPEC	CLASS I	CLASS II	ENGRG ORDER	DESCRIPTION	EFFECTIVITY	DISPOSITION OF EXISTING PARTS		CHANGED BY AND DATE	ENGRG APPD	APPD
												REWORK	SCRAP			
A	1	1.00, 1.10 2.00 & 3.00							EOA1	INITIAL DWG RELEASE. PARTS MADE PER E.O.	LEM-2(32)	NOT	REQD	M.H. MULLER 3/1/66		
	2	1.10 2.00 & 3.00	12C 14C 11B							FOR -3 IN FLD & BM LDW280-23040-5 &-6 WAS LDW 280-28040-5 &-6: FOR -1 IN FLD & B/M ADDED LDW 280-28033-2.	LEM-2(32)	NOT	REQD			
B	1	1.00, 1.10 2.00 & 3.00	7A					✓	EO-B1	IN FIELD & B/M: ADDED LDW280-28327-1 TO-1	LEM-2(32)	✓		N. SIBILLA 9-6-66		
	2	1.10, 2.00 & 3.00							Ⓡ	CHANGED COMMERCIAL CALLOUT TO G.E. AC. VENDOR APPROVED EQUIV.	NOT REQ'D.	NOT	REQ'D.	RS.		
C	1	2.00, 3.00	8A					✓	EO-C1	IN FLD & B/M FOR-1: LDW280-51214-1 (WAS LDW280-28214-1) ADDED LDW 280-51259-1 (REF)	LM-2(32)	✓		P. CAPPADORO 6-27-67		
	2	2.00, 3.00	7A						EO-C2	IN FLD & B/M: ADDED LDW280-28331-5, REMOVED LDW280-28331-1.		✓				
	3	2.00, 3.00	7A						EO-C3	ON-1 IN FLD & B/M ADDED LDW280-28331-8 INSTL.		✓				
	4	2.00, 3.00	7A						EO-C4	ON-1, LDW280-28331-7 WAS LDW280-28331-5		NOT	REQ'D			
	5	2.00, 3.00	7C						EO-C5, LCD-820	ON-1, LDW280-28068-9 WAS LDW280-28068-3		NOT	REQ'D			
	6	2.00, 3.00	7A					✓	EO-C6	FROM-1, REMOVED LDW280-28331-3, -7, & -8		NOT	REQD			
	7	2.00, 3.00	11C				✓		EO-C7, LCD-1220 CCA 526	ON-1 ASSY, IN B/M & FLD. ADDED LDW280-23257-3 INSTL		✓				
	8	2.00, 3.00	8A					✓	EO-C8, LCD 1202	ON-1 DELETED LDW280-28018-1 ADDED LDW280-28018-1-1.		✓				
	9	2.00, 3.00	7A					✓	EO-C9	TO-1, ADDED LDW280-28331-3, -7-2 & -8-1.		NOT	REQ'D			
	10	2.00, 3.00					✓		EO C10, LCD 832A CCA 502 Ⓒ	IN FLD & B/M FOR-1 ADDED LDW340-52343-1 (1) REQ'D		✓				
D	1	2.00, 3.00	13A					✓	EO D1, LCD 1552	ON-1, LDW280-28093-5 WAS -3	LM-2(32)	✓				
	2	2.00, 3.00	7A				✓		LEO 280-609 LCD 1588 LCD 1590	REMOVED FROM-1. LDW280-28036-1 REPLACE WITH LDW280-28036-5. REMOVE LDW280-28037-1 REPLACE WITH LDW280-28037-5.		✓				
	3	2.00, 3.00	7C				✓		EO-D3 LCD 1502 CCA 589	ON-3 REMOVED LDW280-28093-3 ADDED LDW280-28093-7		✓		JG		

FOR CONTINUATION OF REVISIONS SEE SHEET 1.11

GRUMMAN AIRCRAFT ENGRG CORP, BETHPAGE, L. I., NEW YORK			
SIZE B	CODE IDENT NO. 26512	LDW280-52002	D Ⓓ
SCALE NONE			SHEET 1.10

ENG 77.3 5-64

01

NAS 9-1100

REVISIONS

CHANGE LTR	ITEM NO.	SHEET NO.	ZONE	GRUMMAN INFO ONLY	DET SPEC	CLASS I	CLASS II	ENGRG ORDER	DESCRIPTION	EFFECTIVITY	DISPOSITION OF EXISTING PARTS REWORK	DISPOSITION OF EXISTING PARTS SCRAP	CHANGED BY AND DATE	ENGRG APPD	GOVT APPD
D	4	2.00,3.00	13A 7C				✓	EO-D4 LCD 1552	REF. E.O. D1 ON-3, LDW280-28093-11 WAS -7, WAS, ON-1 LDW280-28093-5 WAS -3. ON-3 LDW280-28068-13 WAS-9 SH 1 OF5 WAS SH 1 OF4 ADDED SH 1.11.	LM-2(32)	✓		CAPPADORO 6-27-67 J.G		
E	1	1.10,1.11			✓			EO E1	REF EO D3 ON-3 LDW280-28093-7 WAS -1(WAS LDW 280-28093-7 WAS -3)				J. AVILES 12-1-67		
	2	1.11, 2.00, 3.00	14B			✓		EOE2, LCD 1429, CCA 581	ON-1 LDW280-28123-9 WAS LDW280-28123-5						
	3	1.11, 3.00	2C			✓		EOE3, CCA 578, LCD 1436	ADDED NOTE 3						
	4	1.11, 2.09 3.00	6A				✓	EOE4 LCD 1843	ON-1 ASSY: REMOVED LDW280-28036-5(1 REQD/ASSY) ADDED LDW280-28036-7(1 REQD/ASSY) REMOVED LDW280-28037-5(1 REQD/ASSY) ADDED LDW280-28037-7(1 REQD/ASSY)						
	5	1.11, 2.01 3.00	13B			✓		LEO280-666, LCD1222, LCD1436, CCA548, CCA 578	FOR -1 REMOVED LDW280-28099-1, ADDED LDW280-28099-11						
	6	1.11, 2.01 3.00	14C			✓		LEO280-670, LCD 1860	ON-1 INSTL LDW280-23256-3 WAS LDW280-23256-1						
	7	1.11, 2.00, 3.00	7C 13A			✓		EOE7 LCD 1552	ON-3 REMOVED LDW280-28068-13 & LDW280-28093-11 (1EA) ADDED LDW280-28068-17 & LDW280-28093-15(1EA)						
	8	1.11, 2.01 3.00	7C 10B	R		✓		EOE8, LCD 1758, CCA620	ON-1 DELETED LDW 280-52271-1; ADDED LDW 280-52271-3						
	9	1.11, 2.01, 3.00	14A	T			✓	EOE9 LCD 2105	ON-1, ADDED LDW280-23270-7						
	10	1.11, 2.01, 3.00	14A	O		✓		EO E10 LCD 1590	ON-1, REMOVED LDW280-23270-7 & ADDED LDW280-23270-9						
	11	1.11						LCD 820	REF EOC5: ON-1 SHOULD BE ON-3		NOT	REQD			
	12	1.11					✓	LCD 1202	REF EOC8: ON-1 SHOULD BE ON-3		✓				
	13	1.11					✓	LCD 1552	REF EOD1: ON-1 SHOULD BE ON-3				REM N.D.	12-6-67	

FOR CONTINUATION OF REVISIONS SEE SHEET 1.12

GRUMMAN AIRCRAFT ENGRG CORP, BETHPAGE, L. I., NEW YORK

SIZE	CODE IDENT NO.		
B	26512	LDW280-52002	E
SCALE NONE			SHEET 1.11

(E)

ENG 77.3 5-65

01

NAS 9-1100

MODEL OR END ITEM	NEXT ASSY	MODULE OR SER NO.	REQD PER MODULE OR END ITEM
PART NO.		GAEC SCH NO.	

MODEL OR END ITEM	NEXT ASSY	MODULE OR SER NO.	REQD PER MODULE OR END ITEM
PART NO.		GAEC SCH NO.	

MODEL OR END ITEM	NEXT ASSY	MODULE OR SER NO.	REQD PER MODULE OR END ITEM
LEM	LDW280-52001	LEM-2(32)	1
PART NO. LDW280-52002-1		GAEC SCH NO. 31	

(5)

SH REV STATUS: FOR DESCRIPTION OF REV SEE SUBQ SH

SHEET	1.00	1.10	1.11	200	3.00				
REV	F	D	E	F	F				
SHEET			1.12	2.01					
REV			F	F					
SHEET				202					
REV				F					

LAST SECT LTR USED	D	GRUMMAN REL INFO F	
		PRIM NO.	K(001)
LAST DASH NO. USED	-3	215	MP-16F-2/16/8

UNLESS OTHERWISE SPECIFIED DIMENSIONS ARE IN INCHES.
TOLERANCE UNLESS SPECIFIED
FRACTIONS - DECIMALS - ANGLES
± 1/32 ±.020 ± 1/2

ORIG DWG AUTH
DETAIL SPEC REQUIREMENT
CLASS II ENGRG CHANGE
CLASS I ENGRG CHANGE

CONTRACT NO. NAS 9-1100
LINE ITEM 1
DOCUMENTATION TYPE II

DRAWN BY	M.H.MULLER 3/1/66	RELIABILITY	
LAYOUT BY	G.WHISTON		
CHECKED BY	3-9-66		
GR LEADER	3/14/66		
VEH DES INT	3/24		
STRUCTURES		PROJ ENGR	3-28-66
STRUCTURES	Hilderman 3/25	REL GROUP	3-30-66
WEIGHTS	3/28		

GRUMMAN AIRCRAFT ENGRG CORP
BETHPAGE, L. I., NEW YORK

STRUCTURAL ASSEMBLY
ASCENT STAGE

SIZE	CODE IDENT NO.		
B	26512	LDW280-52002	F
SCALE	NONE	SHEET 1.00 OF 8	

ENG 77.1 9-64

01

NAS 9-1100

REVISIONS

CHANGE LTR	ITEM NO.	SHEET NO.	ZONE	SH CHG LTR	GRUMMAN INFO ONLY	DET SPEC	CLASS I	CLASS II	ENGRG ORDER	DESCRIPTION	EFFECTIVITY	DISPOSITION OF EXISTING PARTS REWORK	DISPOSITION OF EXISTING PARTS SCRAP	CHANGED BY AND DATE	ENGRG APPD	~~GOVT~~ APPD
	14	1.12					✓		LCD 1588 LCD 1590	REF EO D2: ON-1 SHOULD BE ON-3 SH 1.12 & 2.01 ADDED	LM-2(32)	✓		J. AVILES 12-1-67	F. ZUKAS 12-6-67	
	15	1.12					✓		LCD 1502 CCA 589	REF EO D3: LDW280-28093-1 WAS -3						
	16	1.12					✓		LCD 1429, CCA 581	REF EOE2: LDW280-28123-9 WAS LDW280-28123-5 SHOULD BE-ADDED 280-28123-9						
	17	1.12						✓	LCD 1843	REF EOE4: ON-1 SHOULD BE-ON-3						
	18	1.12					✓		LCD1222, LCD1436, CCA548, CCA578	REF LEO280-666: REMOVED LDW280-28099-1, ADDED LDW280-28099-11 SHOULD BE-ADDED LDW280-28099-11						
	19	1.12					✓		LCD 1860	REF LEO 280-670: LDW280-23256-3 WAS LDW280-23256-1 SHOULD BE- ADDED LDW280-23256-3						
	20	1.12					✓		LCD 1758 CCA620 C.O.E ①	REF EOE8: DELETED LDW280-52271-1, ADDED LDW280-52271-3 SHOULD BE-ADDED 280-52271-3						
F	1	1.00					✓		EOF1 LCD 2223 CCA 745	ON-1 DELETED LDW280-52271-3 FROM FLD & B/M	LM-2 (32)	✓		J. BIANCHINO 1-2-68		2-16-68
	2	1.12						✓	EOF2	IN FLD & B/M (ON-1) REMOVED LDW280-23270-9, ADDED LDW280-23270-5						
	3	2.02 3.00 2.00 2.01				✓				ON-3 ADDED LDW280-51321-3 & -4 & REMOVED LDW280-23040-5 & -6, ON-1 ADDED LDW280-23266-1 & -2, LDW280-23287-1, LDW280-23335-1, LDW280-28133-1, LDW280-28135-1, LDW280-28215-1 & -2 LDW280-28258-1, LDW280-28302-1, LDW280-28330-1, LDW280-28348-1 & -3 LDW280-28375-3 & -5, LDW280-51171-1, LDW280-23263-1 & -2, LDW280-51846-1, LDW280-52265-1 & -2 LDW360-52274-3 & -5 & LDW360-21261-1, -3, -5 & -7, REMOVED LDW280-28171-1, ADDED SH 2.02 & SECT D-D		✓				
	4					✓				ON-1 ADDED TO FLD & B/M LDW280-23498-3						
	5							✓	LCD 459 OK	ON-1 ADDED TO FLD & B/M LDW280-51206-1						
	6					✓				ON-1 ADDED TO FLD & B/M LDW280-51950-1 & -7						
	7					✓				ON-1 ADDED TO FLD & B/M LDW280-52144-1						

①

LTR	GROUP LDR	VEH DES INT	STRUCT	STRUCT	WEIGHTS
E	—	Jap 1/20			
F	—	JAP 1/29/68			

FOR CONTINUATION OF REVISIONS SEE SHEET

ENG 77.3 5-64

GRUMMAN AIRCRAFT ENGRG CORP, BETHPAGE, L. I., NEW YORK

SIZE	CODE IDENT NO.		
B	26512	LDW280-52002	F Ⓕ
SCALE NONE			SHEET 1.12

01

NAS 9-1100

QTY PER ASSEMBLY							CODE IDENT	PART NO.	I&T	NOMENCLATURE OR DESCRIPTION	MATERIAL	GOVT SPEC	COML SPEC	STOCK SIZE	PROCESS SYM	FINISH NO.	ZONE
					-3	-1											
					1			GC550AH-1	E	COUPLING	GRUMMAN STD						4A
							1	LDW280-28123-9		SUPPORT INSTL	SEE DWG						14B
						1		LDW340-52343-1		SUPPORT INSTL	SEE DWG						7B
						1		LDW280-51259-1		FITTING INSTL	SEE DWG						3A
						1		LDW280-28331-8-1		SUPPORT INSTL	SEE DWG						7A
						1		LDW280-28331-7-2		SUPPORT INSTL	SEE DWG						7A
						1		LDW280-28331-3		SUPPORT INSTL	SEE DWG						7A
						1		LDW280-23257-3		SUPPORT INSTL	SEE DWG						11C
						1		LDW280-28327-1		SUPPORT INSTL	SEE DWG						7B
						1		LDW280-52401-1		STRUCTURAL INSTL	SEE DWG						6A
						1		LDW280-51214-1		CLAMP INSTL							8A
					1			LDW280-28149-1		COVER ASSY							4B
					1			LDW280-28093-15		HATCH INSTL							13A
					1			LDW280-28068-17		HATCH INSTL							7C
					1			LDW280-28066-1		FRAME INSTL							9C
																	13B
																	12C
					1			LDW280-28037-7		TRUSS ASSY							7A
					1			LDW280-28036-7		TRUSS ASSY							7A
						1		LDW280-28034-2		THRUSTER CLUSTER							6B
						1		LDW280-28034-1		THRUSTER CLUSTER							6B
						1		LDW280-28033-2		THRUSTER CLUSTER							11B
						1		LDW280-28033-1		THRUSTER CLUSTER							11B
						1		LDW280-28024-1		TRUSS INSTL							9A
					1			LDW280-28018-1-1		STIFFENER INSTL							8A
					1			LDW280-52012-1		MIDSECTION ASSY							7A
					1			LDW280-52010-1		CABIN ASSY	SEE DWG						9A
						1		LDW280-52002-3		STRUCTURAL SUB ASSY					NONE	NONE	
								LDW280-52002-1	E	STRUCTURAL ASSY					NONE	NONE	

SYM OR NO.	PROCESS OR FINISH	GRUMMAN SPEC OR MILITARY SPEC	SYM OR NO.	PROCESS OR FINISH	GRUMMAN SPEC OR MILITARY SPEC	SYM OR NO.	PROCESS OR FINISH	GRUMMAN SPEC OR MILITARY SPEC

I & T: IDENTIFICATION AND TRACEABILITY IN ACCORDANCE WITH : NONE

GRUMMAN AIRCRAFT ENGRG CORP, BETHPAGE, L. I., NEW YORK

SIZE	CODE IDENT NO.		
B	26512	LDW280-52002	F

SCALE NONE

SHEET 2.00

ENG 77.2 7-65

01

NAS 9-1100

QTY PER ASSEMBLY -3	QTY PER ASSEMBLY -1	PART NO.	I&T	CODE IDENT	NOMENCLATURE OR DESCRIPTION	MATERIAL	GOVT SPEC	COML SPEC	STOCK SIZE	PROCESS SYM	FINISH NO.	ZONE
1		LDW280-51321-4	E		PANEL INSTL	SEE DWG						5A
1		LDW280-51321-3			PANEL INSTL							5A
	1	LDW280-51206-1			FITTING INSTL							7A
	1	LDW280-51171-1			CLAMP INSTL							8A
	1	LDW280-28348-3			SUPPORT INSTL							8A
	1	LDW280-28348-1			SUPPORT INSTL							7B
	1	LDW280-23498-3			SUPPORT INSTL							7B
	1	LDW280-23335-1			LATCH ASSY							7B
	1	LDW280-28330-1			BRACKET INSTL							7C
	1	LDW280-28215-2										14B
	1	LDW280-28215-1										14B
	1	LDW280-23266-2										11B
	1	LDW280-23266-1			BRACKET INSTL							11B
	1	LDW280-52265-2			SUPPORT INSTL							7B
	1	LDW280-52265-1										7B
	1	LDW280-51846-1										13A
	1	LDW280-28375-5										7A
	1	LDW280-28375-3										6A
	1	LDW280-28302-1										7C
	1	LDW280-28258-1										6C
	1	LDW280-28135-1										7C
	1	LDW280-28133-1										12C
	1	LDW280-23287-1										14A
	1	LDW280-23263-2										11B
	1	LDW280-23263-1										11B
	1	LDW280-28099-11										13B
	1	LDW280-23270-5										14A
	1	LDW280-23256-3	E		SUPPORT INSTL	SEE DWG						14C

SYM OR NO.	PROCESS SYM OR FINISH NO.	GRUMMAN SPEC OR MILITARY SPEC	SYM OR NO.	PROCESS SYM OR FINISH NO.	GRUMMAN SPEC OR MILITARY SPEC	SYM OR NO.	PROCESS SYM OR FINISH NO.	GRUMMAN SPEC OR MILITARY SPEC

I&T: IDENTIFICATION AND TRACEABILITY IN ACCORDANCE WITH NONE

GRUMMAN AIRCRAFT ENGRG CORP., BETHPAGE, L. I., NEW YORK

SIZE	CODE IDENT NO.		
B	26512	LDW280-52002	F

SCALE NONE

SHEET 2.01

ENG 77.2 5-64

01

NAS 9-1100

QTY PER ASSEMBLY -3	QTY PER ASSEMBLY -1	CODE IDENT	PART NO.	I&T	NOMENCLATURE OR DESCRIPTION	MATERIAL	GOVT SPEC	COML SPEC	STOCK SIZE	PROCESS SYM	FINISH NO.	ZONE
	1		LDW360-21261-7	E	TRANSDUCER INSTL	SEE DWG						12E
	1		-5									9C
	1		-3									7B
	1		LDW360-21261-1									9B
	1		LDW360-52274-5									12A
	1		LDW360-52274-3		TRANSDUCER INSTL							12A
	1		LDW280-52144-1		TANK INSTL							7B
	1		LDW280-51950-7		TANK INSTL							14B
	1		LDW280-51950-1	E	TANK INSTL	SEE DWG						14B

SYM OR NO.	PROCESS OR FINISH	GRUMMAN SPEC OR MILITARY SPEC	SYM OR NO.	PROCESS OR FINISH	GRUMMAN SPEC OR MILITARY SPEC	SYM OR NO.	PROCESS OR FINISH	GRUMMAN SPEC OR MILITARY SPEC

I & T: IDENTIFICATION AND TRACEABILITY IN ACCORDANCE WITH : NONE

GRUMMAN AIRCRAFT ENGRG CORP, BETHPAGE, L. I., NEW YORK

SIZE	CODE IDENT NO.		
B	26512	LDW280-52002	F Ⓕ
SCALE NONE			SHEET 2.02

ENG 77.2 7-65

01

NAS 9-1100

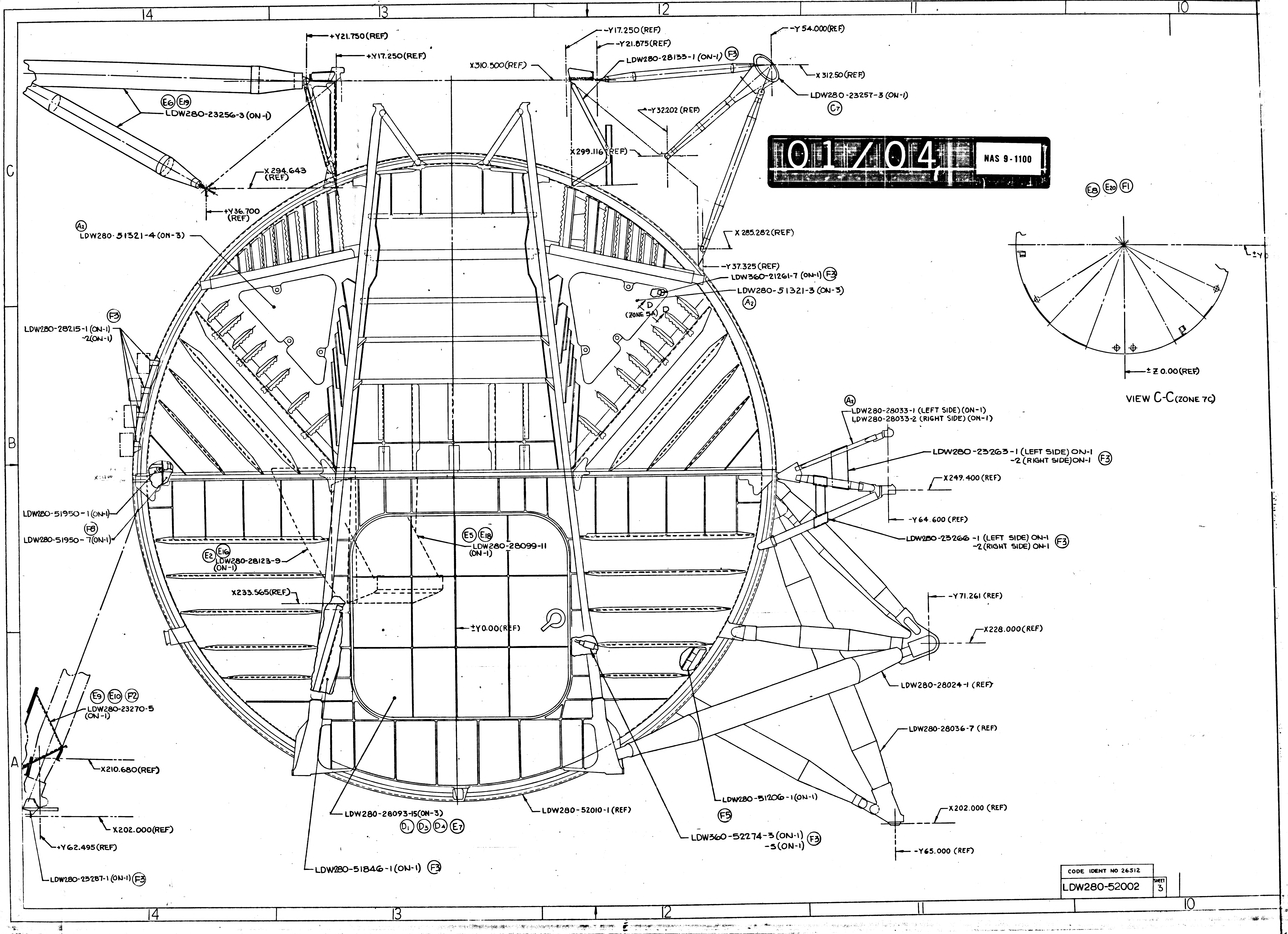
14
13
12
11
10
C
B
A
+Y21.750(REF)
+Y17.250(REF)
E6 E19
LDW280-23256-3 (ON-1)
X294.643 (REF)
+Y36.700 (REF)
-Y17.250(REF)
-Y21.875(REF)
X310.500(REF)
LDW280-28133-1 (ON-1) F3
-Y54.000(REF)
X312.50(REF)
LDW280-23257-3 (ON-1)
C7
-Y32202 (REF)
X299.116(REF)
X285.282(REF)
-Y37.325(REF)
LDW360-21261-7 (ON-1) F3
LDW280-51321-3 (ON-3)
A2
D
D
(ZONE 5A)
A2
LDW280-51321-4 (ON-3)
F3
LDW280-28215-1 (ON-1)
-2(ON-1)
LDW280-51950-1(ON-1)
F6
LDW280-51950-7(ON-1)
E5 E18
LDW280-28099-11 (ON-1)
E2 E16
LDW280-28123-9 (ON-1)
X233.565(REF)
±Y0.00(REF)
E9 E10 F2
LDW280-23270-5 (ON-1)
X210.680(REF)
X202.000(REF)
+Y62.495(REF)
LDW280-23287-1 (ON-1) F3
LDW280-28093-15(ON-3)
D1 D3 D4 E7
LDW280-51846-1(ON-1) F3
LDW280-52010-1 (REF)
LDW280-51206-1(ON-1)
F5
LDW360-52274-3(ON-1)
-5(ON-1) F3
E8 E20 F1
±Y0
±Z0.00(REF)
VIEW C-C(ZONE 7C)
A2
LDW280-28033-1 (LEFT SIDE)(ON-1)
LDW280-28033-2 (RIGHT SIDE)(ON-1)
LDW280-23263-1 (LEFT SIDE) ON-1
-2 (RIGHT SIDE)ON-1 F3
X249.400 (REF)
-Y64.600 (REF)
LDW280-23266-1 (LEFT SIDE) ON-1
-2 (RIGHT SIDE) ON-1 F3
-Y71.261 (REF)
X228.000(REF)
LDW280-28024-1 (REF)
LDW280-28036-7 (REF)
X202.000 (REF)
-Y65.000 (REF)
CODE IDENT NO 26512
LDW280-52002
SHEET
3

01/04 NAS 9-1100

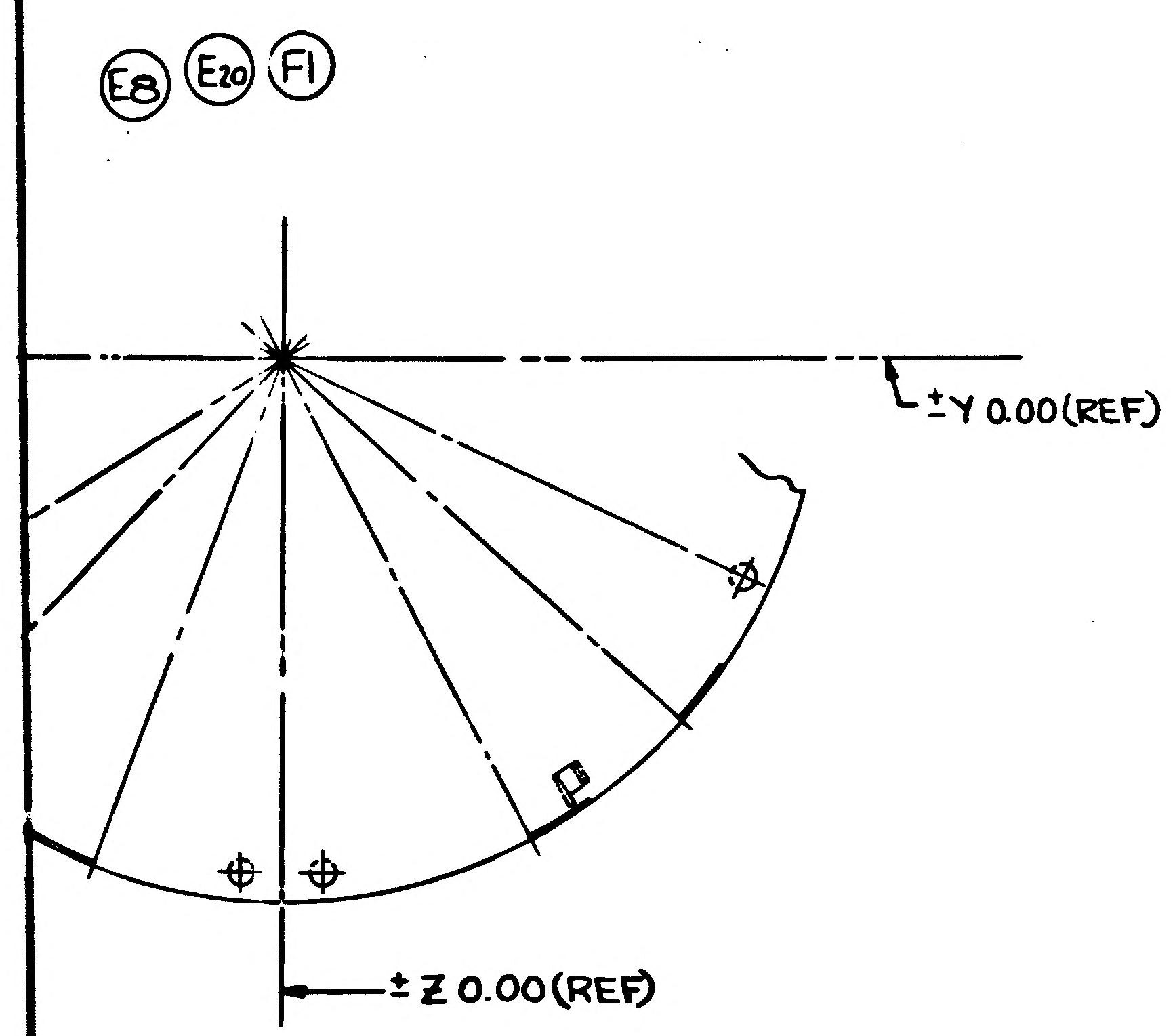
E8 E20 F1
±Y 0.00(REF)
±Z 0.00(REF)

VIEW C-C(ZONE 7C)

ON-1
ON-1 F3

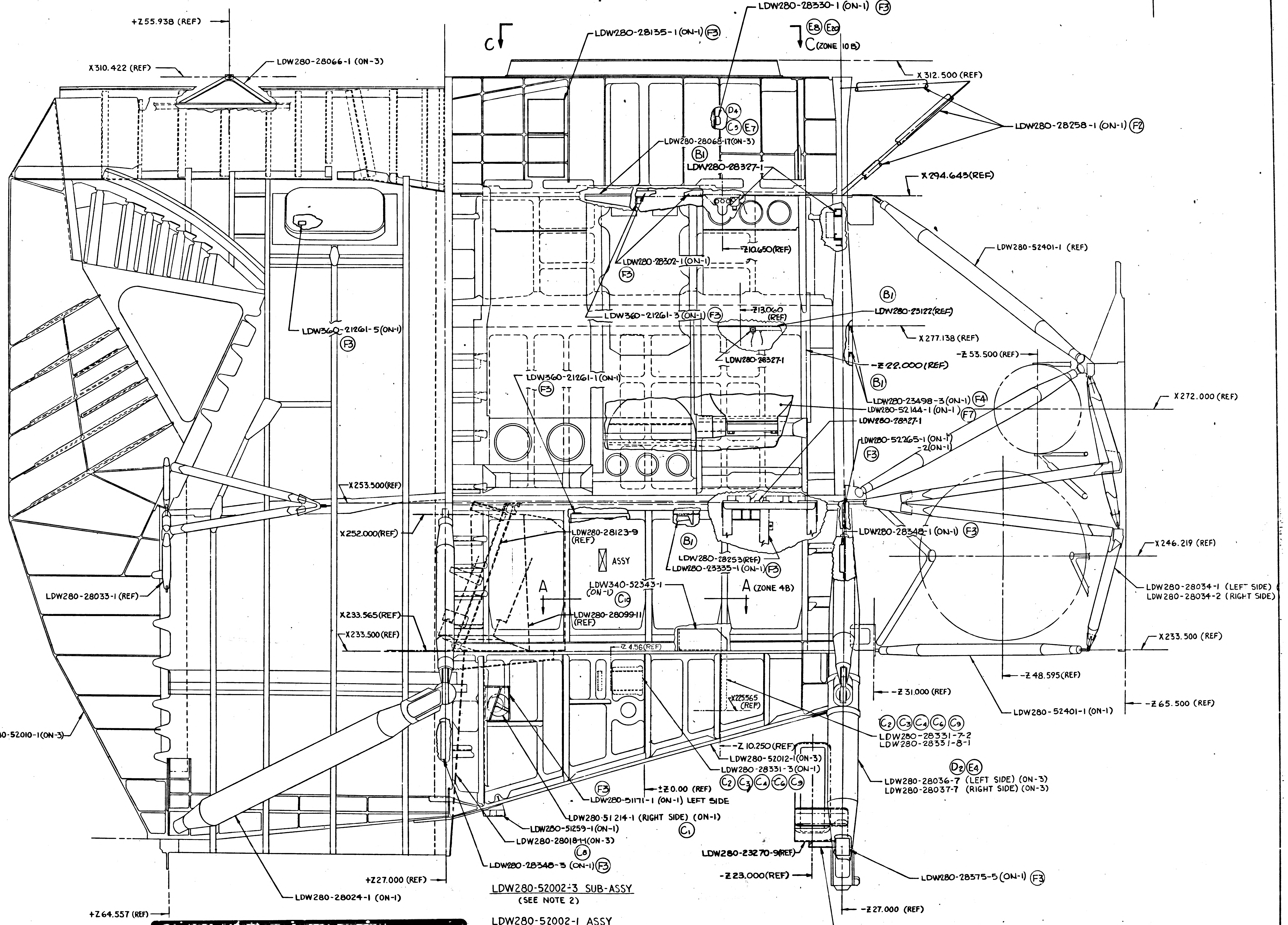
+Z55.938 (REF)
X310.422 (REF)
LDW280-28066-1 (ON-3)
C
LDW280-28135-1 (ON-1) F3
LDW280-28330-1 (ON-1) F3
E8 E20
C (ZONE 10B)
X312.500 (REF)
LDW280-28258-1 (ON-1) F2
D4 C5 E7
LDW280-28068-17(ON-3)
B1
LDW280-28327-1
X294.643(REF)
Z10.650(REF)
LDW280-28302-1 (ON-1)
F3
LDW280-52401-1 (REF)
B1
LDW280-23122(REF)
LDW360-21261-3 (ON-1) F3
Z13.060 (REF)
X277.138 (REF)
LDW360-21261-5(ON-1)
F3
LDW280-28327-1
-Z22.000(REF)
-Z53.500(REF)
B1
LDW360-21261-1(ON-1)
F3
LDW280-23498-3(ON-1) F4
LDW280-52144-1 (ON-1)
F7
X272.000 (REF)
LDW280-28327-1
LDW280-52265-1 (ON-1)
-2(ON-1)
F3
X253.500(REF)
X252.000(REF)
LDW280-28123-9 (REF)
ASSY
B1
LDW280-28253(REF)
LDW280-23335-1 (ON-1) F3
LDW280-28348-1 (ON-1) F3
X246.219 (REF)
LDW280-28034-1 (LEFT SIDE)
LDW280-28034-2 (RIGHT SIDE)
LDW280-28033-1 (REF)
A
LDW340-52343-1 (ON-1)
C10
A (ZONE 4B)
LDW280-28099-11 (REF)
X233.565(REF)
X233.500(REF)
Z4.56 (REF)
X233.500 (REF)
-Z48.595(REF)
-Z31.000 (REF)
-Z65.500 (REF)
LDW280-52401-1 (ON-1)
X225.565 (REF)
LDW280-52010-1(ON-3)
C2 C3 C4 C6 C9
LDW280-28331-7-2
LDW280-28331-8-1
-Z10.250 (REF)
LDW280-52012-1(ON-3)
LDW280-28331-3(ON-1)
C2 C3 C4 C6 C9
D2 E4
LDW280-28036-7 (LEFT SIDE) (ON-3)
LDW280-28037-7 (RIGHT SIDE) (ON-3)
F3
±Z0.00 (REF)
LDW280-51171-1 (ON-1) LEFT SIDE
LDW280-51214-1 (RIGHT SIDE) (ON-1)
C1
LDW280-51259-1(ON-1)
LDW280-28018-11(ON-3)
C8
LDW280-23270-9(REF)
LDW280-28348-3 (ON-1) F3
-Z23.000(REF)
LDW280-28375-5(ON-1) F3
+Z27.000 (REF)
LDW280-28024-1 (ON-1)
-Z27.000 (REF)
+Z64.557 (REF)
LDW280-28375-3(ON-1) F3

LDW280-52002-3 SUB-ASSY
(SEE NOTE 2)

LDW280-52002-1 ASSY
LEFT SIDE VIEW LOOKING INBOARD

IDENT NO 26512
280-52002 SHEET 3

02/04 NAS 9-1100

CODE IDENT NO 26512
LDW280-52002 SHEET 3

NOTES:

1. GC550AH-1 COUPLING, TORQUE REQUIREMENT 60-70 IN. LB.
2. -3 ASSY TO BE MINIMUM ASCENT STAGE STRUCTURE REQUIRED FOR PROOF PRESSURE TEST PER LPC942-4401
3. AREAS IN THE CREW COMPARTMENT WHICH HAVE EPON 919 APPLIED AS AN OVERCOAT TO MECHANICAL FASTENERS, AFTER THE INTERIOR FINISH COATING HAS BEEN APPLIED, SHALL BE OVERCOATED IN ACCORDANCE WITH LPC 280-24 (EPON 919 ON PART NO. STAMPS, NAMEPLATES, & USED ON THE BACK OF GAMAH FITTINGS DOES NOT REQUIRE OVERCOATING)

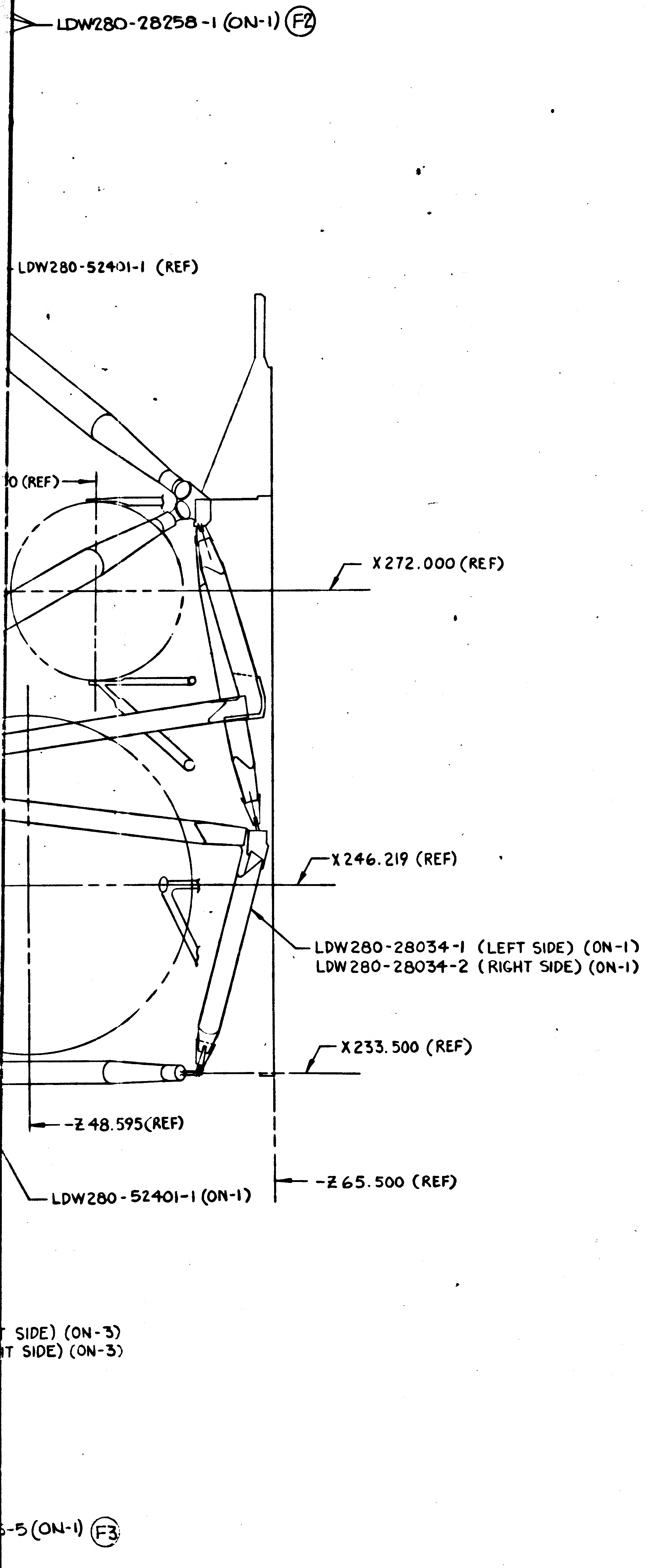
LDW280-28258-1 (ON-1) F2
LDW280-52401-1 (REF)
0 (REF)
X 272.000 (REF)
X 246.219 (REF)
LDW280-28034-1 (LEFT SIDE) (ON-1)
LDW280-28034-2 (RIGHT SIDE) (ON-1)
X 233.500 (REF)
-Z 48.595 (REF)
-Z 65.500 (REF)
LDW280-52401-1 (ON-1)
T SIDE) (ON-3)
IT SIDE) (ON-3)
5-5 (ON-1) F3

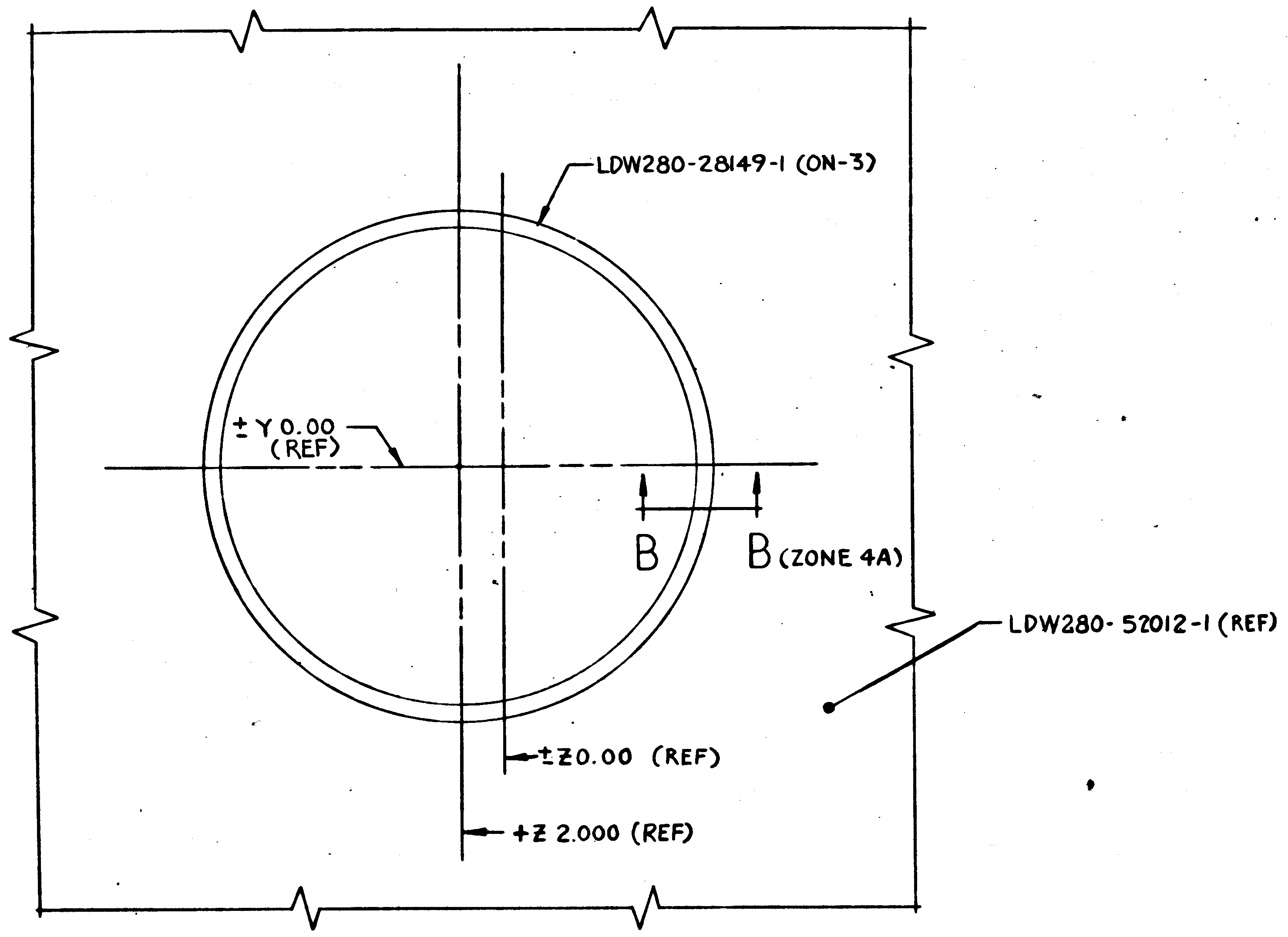
LDW280-28149-1 (ON-3)
± Y 0.00 (REF)
B
B (ZONE 4A)
LDW280-52012-1 (REF)
±Z 0.00 (REF)
+Z 2.000 (REF)

SECTION A-A
(ZONE 7B)

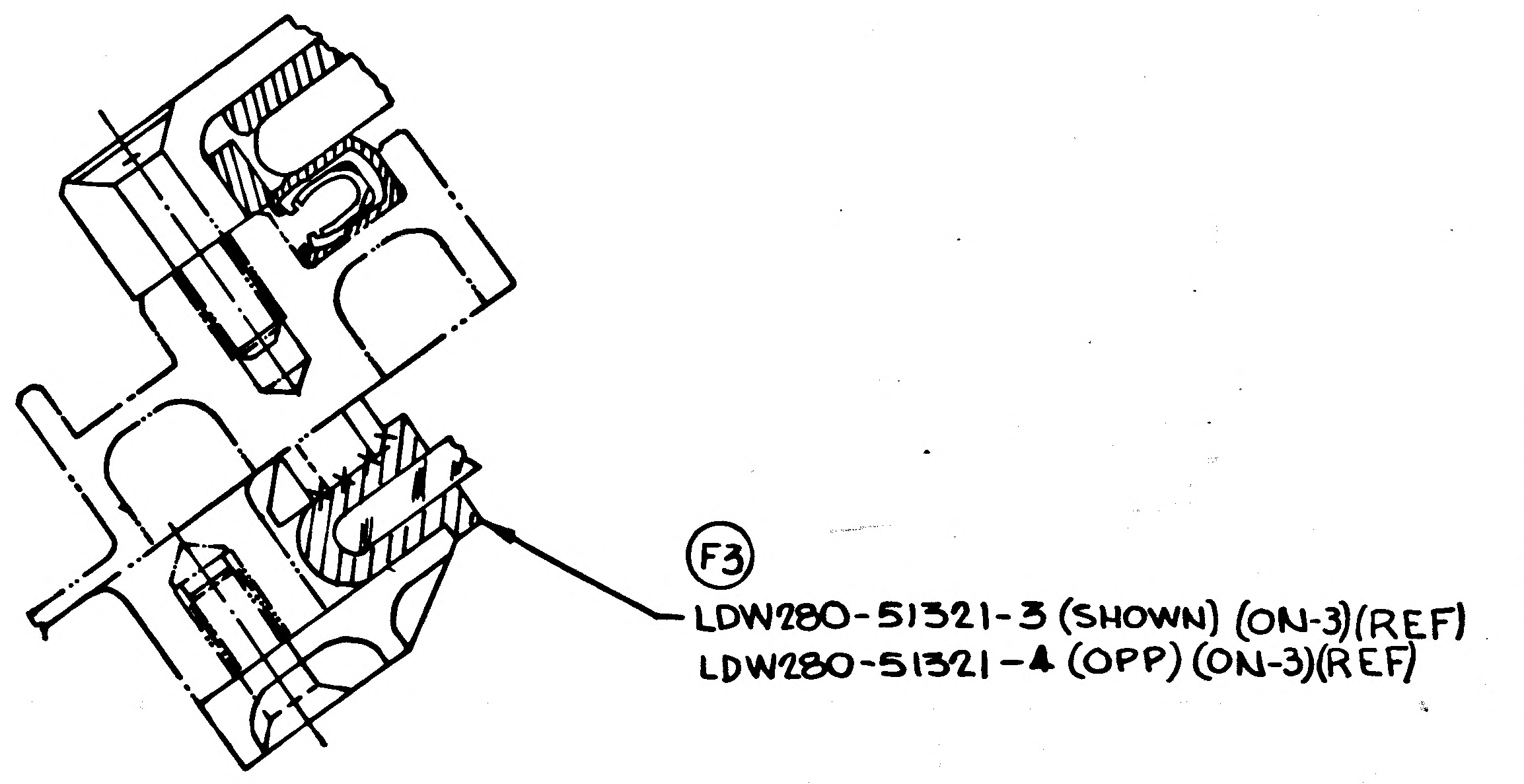
F3
LDW280-51321-3 (SHOWN) (ON-3) (REF)
LDW280-51321-4 (OPP) (ON-3) (REF)

SECTION D-D
(ZONE 12C)
(SCALE: FULL)

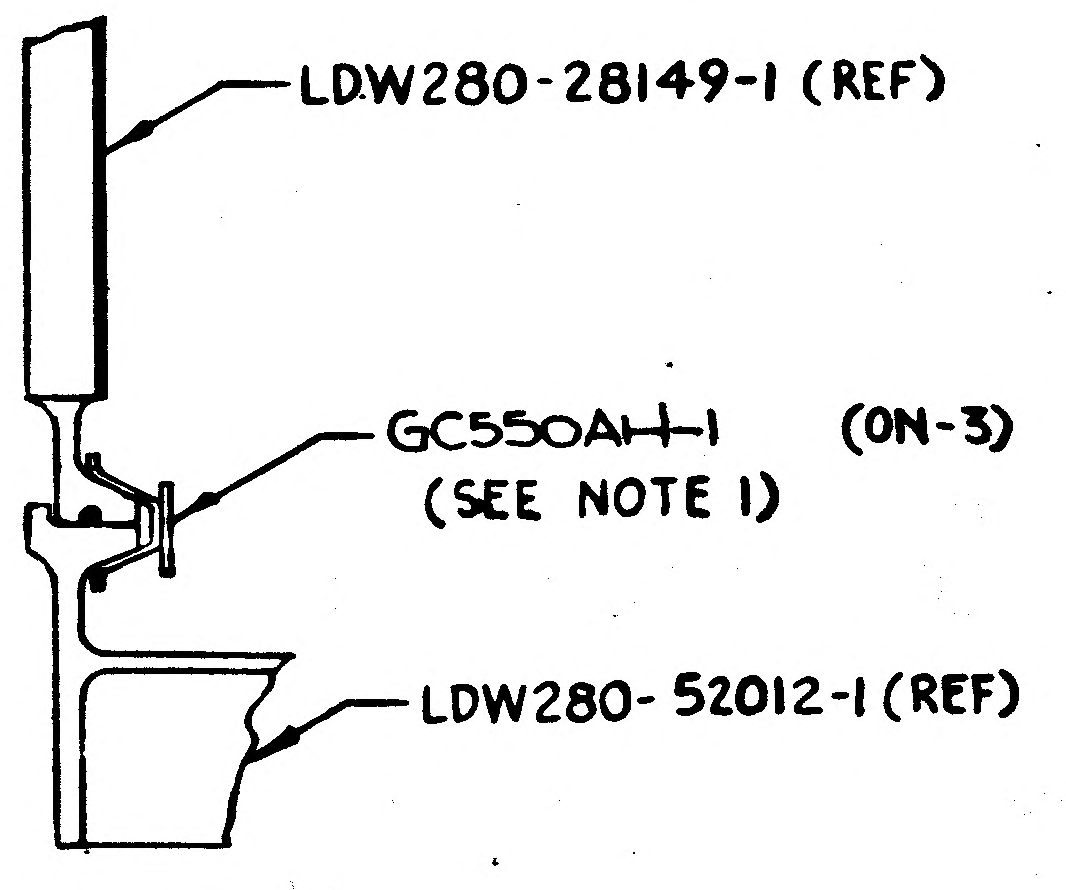
LDW280-28149-1 (REF)
GC550AH-1 (ON-3)
(SEE NOTE 1)
LDW280-52012-1 (REF)

SECTION B-B
(ZONE 4B)
(SCALE: FULL)

03/04 NAS 9-1100

CODE IDENT NO 26512
LDW280-52002 SHEET 3

CODE IDENT NO 26512
LDW280-52002 SHEET 3

LEM
SIZE J

NOTES:

1. GC550AH-1 COUPLING, TORQUE REQUIREMENT 60-70 IN. LB.
2. -3 ASSY TO BE MINIMUM ASCENT STAGE STRUCTURE REQUIRED FOR PROOF PRESSURE TEST PER LPC942-4401
3. AREAS IN THE CREW COMPARTMENT WHICH HAVE EPON 919 APPLIED AS AN OVERCOAT TO MECHANICAL FASTENERS, AFTER THE INTERIOR FINISH COATING HAS BEEN APPLIED, SHALL BE OVERCOATED IN ACCORDANCE WITH LPC 280-24 (EPON 919 ON PART NO. STAMPS, NAMEPLATES, & USED ON THE BACK OF GAMAH FITTINGS DOES NOT REQUIRE OVERCOATING)

MANUFACTURING OPERATIONS UNLESS OTHERWISE SPECIFIED NOTES CHECKED ✓ APPLY TO THIS DWG.	
RUBBER STAMP PART NUMBER AND ALL OTHER MARKINGS IN REGION MARKED ⊠ [redacted]	✓
FILLET AND INSIDE CORNER RADII TOLERANCES .016R TO .062R ± .010 .063R TO .250R ± .015 OVER .250R ± .030	
DEPTH SHOWN FOR TAPPED HOLES IS FULL THDS. 2-3 IMP THDS. BEYOND PERMISSIBLE.	
EXTERNAL THREAD LENGTH SHOWN INCLUDES 2 IMPERFECT THREADS MAX.	
DO NOT CADMIUM PLATE & PAINT HOLES OR SURFACES MARKED WITH DOUBLE ASTERISK.	
MISMATCH STEP OF ± .005 PERMISSIBLE DUE TO CHANGE OF CUTTERS AT INSIDE INTERSECTING SURFACES.	
DIAMETERS MARKED MUST BE CONCENTRIC WITHIN FULL INDICATOR READING	
HOLES MUST BE KEPT FREE OF CHROME PLATING SOLUTION.	
ALL DIMENSIONS SHOWN TO BE MET AFTER CADMIUM PLATING. THICKNESS OF PLATE .0003 MIN. TO .0005 MAX. MIN. THICKNESS TO BE .0002 ON THREADED AREAS. NO ALLOWANCE FOR PLATING IN HOLES	
125 √ SURFACE ROUGHNESS INCLUDING REAMED HOLES PER MIL-STD-10	
200 √ FOR ALL DRILLED HOLES	
REMOVE ALL BURRS. BREAK ALL EDGES .015-.031	
INSPECTION INFORMATION MINIMUM PERMISSIBLE AVERAGE EDGE DISTANCE MARKED IS	
SYMBOL √ DENOTES SURFACE TO BE MACHINED	
UNLESS OTHERWISE SPECIFIED TOLERANCE ON FLANGES IS ± 1/32	
LENGTHS OF AN, NAS & MS AL ALY RIVETS SHORTER THAN 1 INCH ARE NOT SPECIFIED.	
TOLERANCE ON LOFTED DELINEATIONS IS	

DWG SIZE 34 X 142

PRINTING INFO ONLY

FULL SIZE SHEET AREA (36 X 144)= 36 SQ. FT.

1/2 SIZE SHEET AREA (1/4 OF FULL)= 9 SQ. FT.

PRINT TRIM LINE

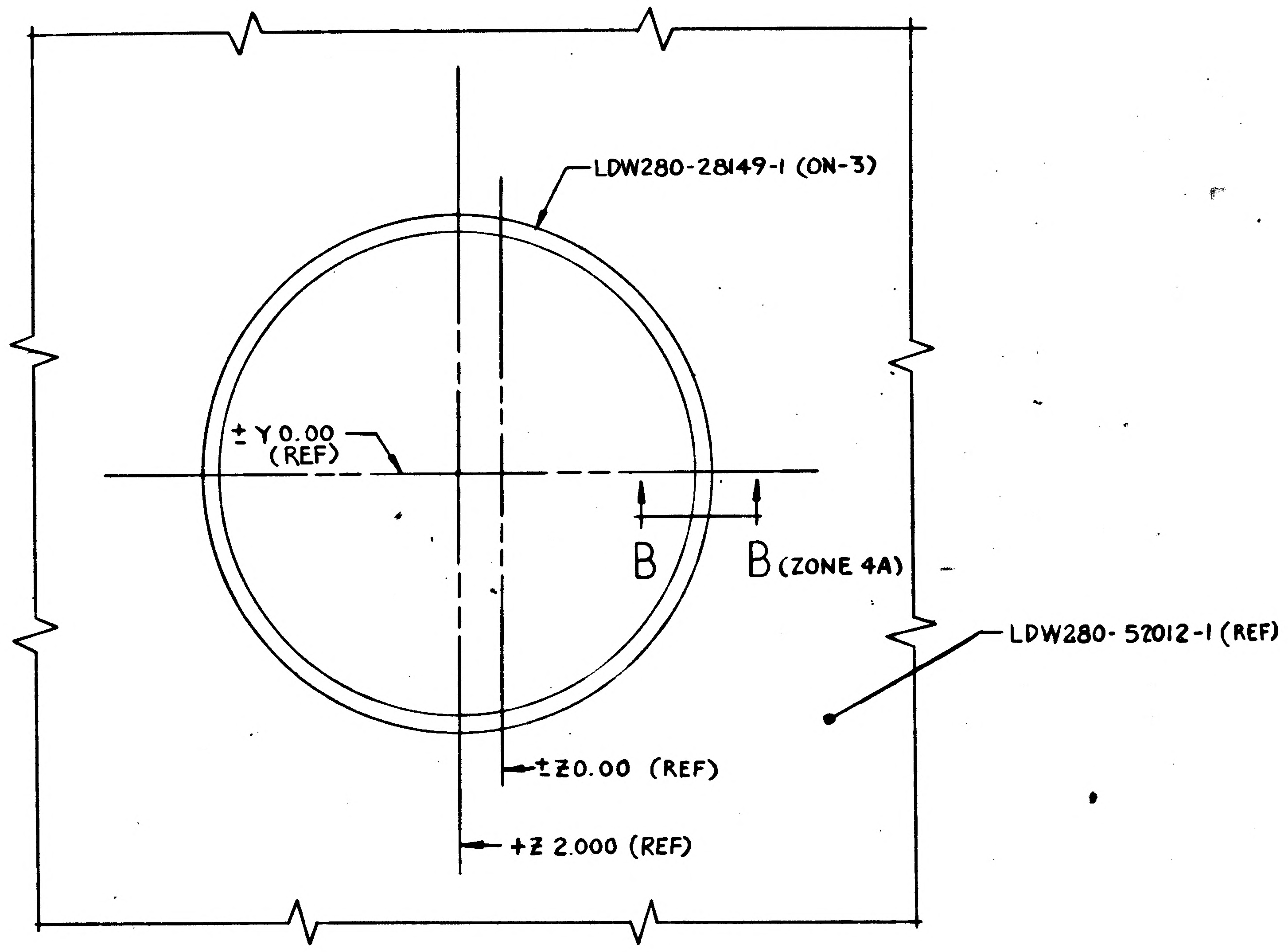

SECTION A-A
(ZONE 7B)

ON-1)
ON-1)

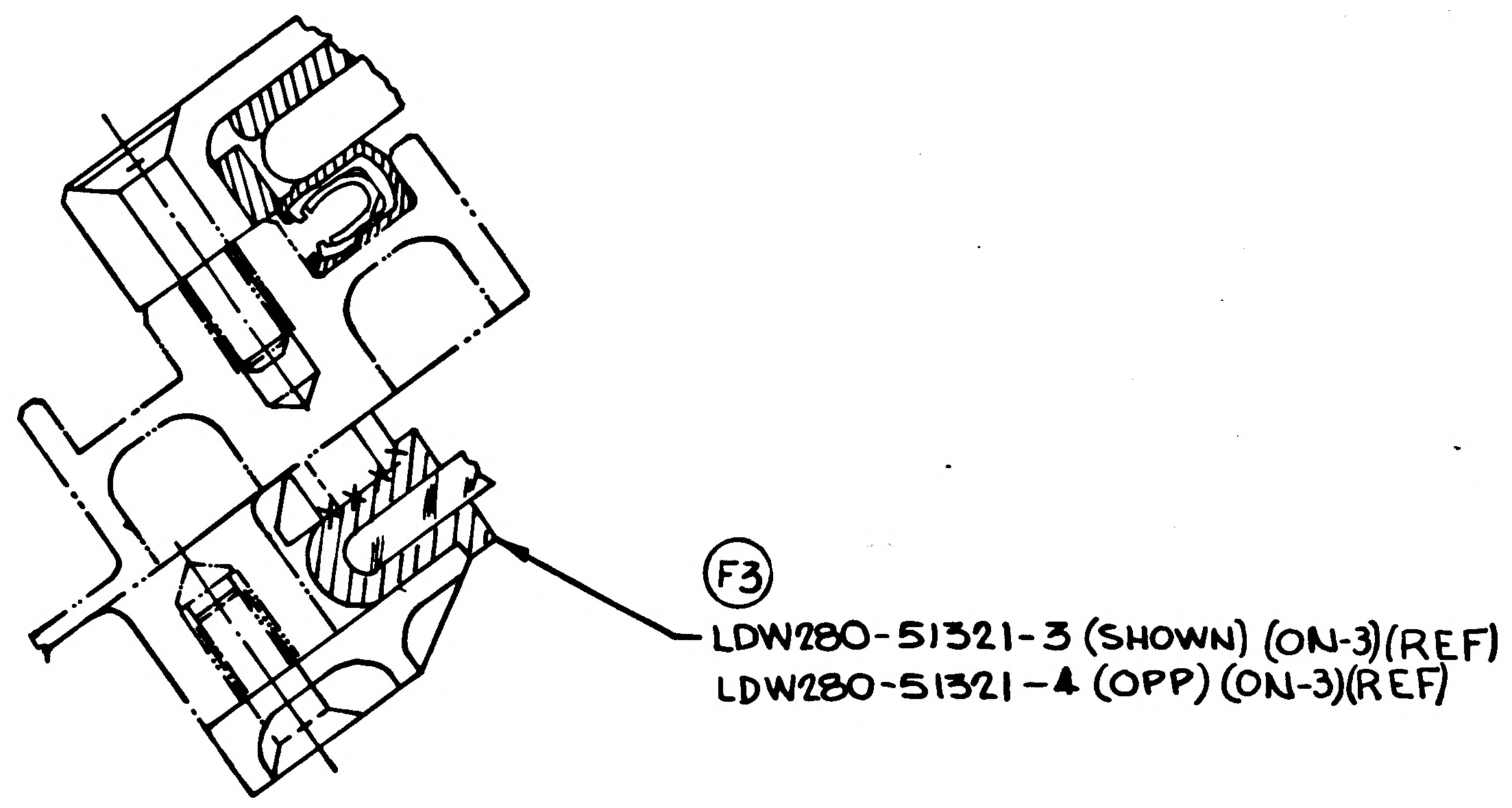
F3
LDW280-51321-3 (SHOWN) (ON-3)(REF)
LDW280-51321-4 (OPP) (ON-3)(REF)

SECTION D-D
(ZONE 12C)
(SCALE: FULL)

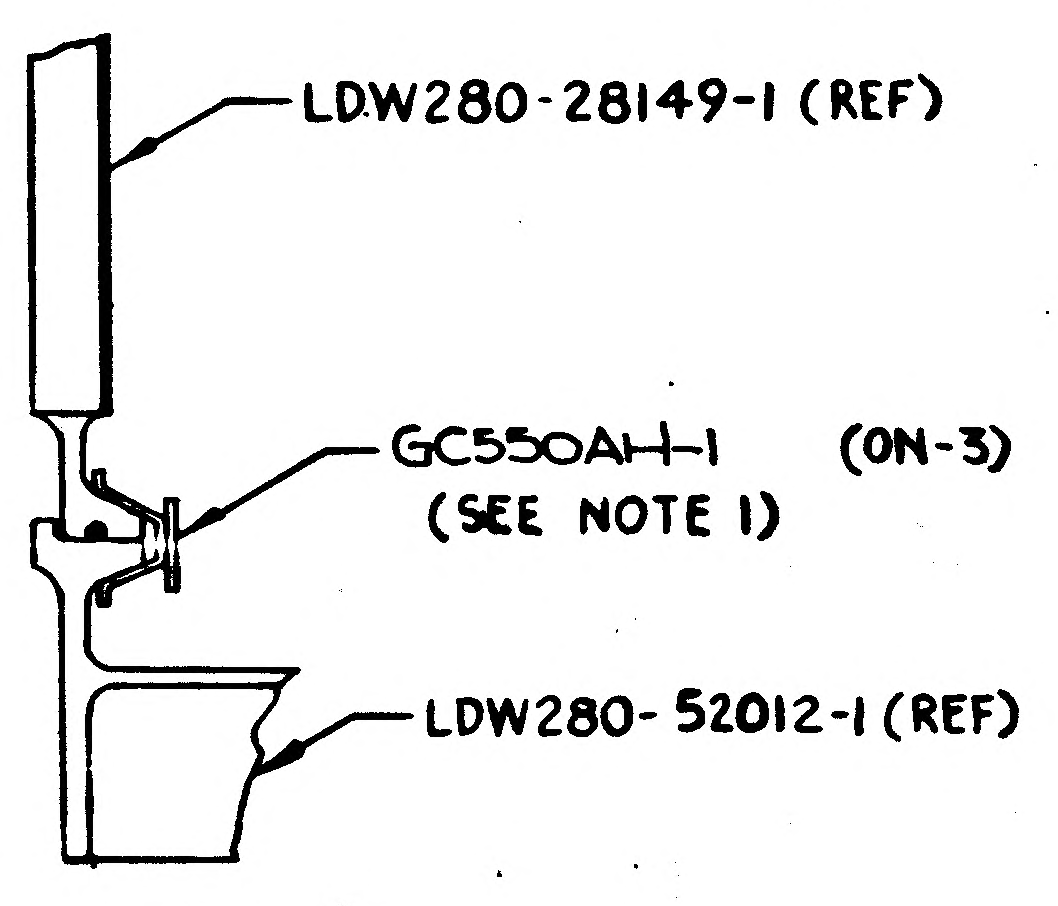

SECTION B-B
(ZONE 4B)
(SCALE: FULL)

04/04

NAS 9-1100

CODE IDENT NO 26512	SHEET
LDW280-52002	3

GRUMMAN AIRCRAFT ENGRG CORP., BETHPAGE, L. I., NEW YORK

MODEL OR END ITEM	SIZE	CODE IDENT NO.		
LEM	J	26512	LDW280-52002	F

SCALE 1/4 & NOTED SHEET 3.00

LDW280-52002 F

LDW280-52002 F

ENG 32.1 REV 3-65

GRUMMAN AIRCRAFT ENGINEERING CORP.
CODE IDENT NO. 26512
ENGINEERING ORDER

DWG. NO. LDW280-52002
EO NO. G1
CONTROL INFO NO. LDW280B-6512

ON-1 INSTL. LDW280-23287-5
WAS LDW280-23287-3

LFM

DETAIL SPEC REQ	☐	CL II ENGRG CHG	☐	CL I ENGRG CHG	☑

LCD 3614 PKG # 10 CCA 1610 (5)

REASON FOR EO: TO ADD LFM-107 TO LM-2 DROP TEST

DESCRIPTION OF EO: ON-1 LDW280-23287-5 WAS -3

GAEC EO RELEASE: ✓ 12/14/68

MODEL	EFFECTIVITY: PROCURING ACTIVITY NO.	GAEC UNIT NO.	SUB CONTR UNIT NO.
LM	LFM #107	LM-2 (32)	

DRAWING CHANGE REQD: REVISE DWG	RECORD EO	DISPOSITION OF PARTS: REWORK	SCRAP
✓		✓	

		SUPPORT	RELIAB. GROUP	GROUP LEADER	STRESS GROUP	LIAISON ENGRG	PROJ ENGRG	~~GOVT~~
APPROVED BY	JMS			JDR	CR		JAP	R
DATE	12/13/68 VDI			12/13/68	[illegible]/68		12/13/68	12-14-68

PRIORITY	DRAWING TITLE	DRAWING NO.	EO NO.
C	STRUCTURAL ASSEMBLY-A/S	LDW280-52002	G1

12-13-68
ISSUED BY W. PAIUK SECTION VEH. DES. INT. GROUP NO. 335 PL 25

01

NAS 9-1100

LDW280-52003

MODEL OR END ITEM	NEXT ASSY	MODULE OR SER NO.	REQD PER MODULE OR END ITEM	MODEL OR END ITEM	NEXT ASSY	MODULE OR SER NO.	REQD PER MODULE OR END ITEM	MODEL OR END ITEM	NEXT ASSY	MODULE OR SER NO.	REQD PER MODULE OR END ITEM
								LM	—	LM-2(32)	1
PART NO.		GAEC SCH NO.		PART NO.		GAEC SCH NO.		PART NO. LDW280-52003		GAEC SCH NO.	

5

SH REV STATUS: FOR DESCRIPTION OF REV SEE SUBQ SH

SHEET	1.00		2.00						
REV									
SHEET									
REV									
SHEET									
REV									

LAST SECT LTR USED

LAST DASH NO. USED

GRUMMAN REL INFO

PRIM NO.	(001)	
201	MP-14	10-20-6

UNLESS OTHERWISE SPECIFIED DIMENSIONS ARE IN INCHES.
TOLERANCE UNLESS SPECIFIED
FRACTIONS - DECIMALS – ANGLES
~ ~ ~

ORIG DWG AUTH
DETAIL SPEC REQUIREMENT
CLASS II ENGRG CHANGE
CLASS I ENGRG CHANGE

CONTRACT NO. NAS 9-1100
LINE ITEM # 1
DOCUMENTATION TYPE II

DRAWN BY GENTILE 9/23/66
LAYOUT BY WHISTON
CHECKED BY EG 10-5-66
GR. LDR.
V.D.I. W.E. Bischoff
STRUCT 10-1
PROJ ENGR 10-17
REL GROUP 10/19/66

® GRUMMAN AIRCRAFT ENGRG CORP
BETHPAGE, L. I., NEW YORK

GENERAL ARRANGEMENT
LUNAR MODULE

SIZE B
CODE IDENT NO. 26512
LDW280-52003
SCALE NONE
SHEET 1.00 OF 2

ENG 77.1 12-65

CDR 10/15/66

01

NAS 9-1100

REVISIONS

CHANGE LTR	ITEM NO.	SHEET NO.	ZONE	GRUMMAN INFO ONLY	DET SPEC	CLASS I	CLASS II	ENGRG ORDER	DESCRIPTION	EFFECTIVITY	DISPOSITION OF EXISTING PARTS		CHANGED BY AND DATE	ENGRG APPD	GOVT APPD
											REWORK	SCRAP			
	1	1, 1.10 2.00 TO 2.04 3, 4, 5						EO A1	E.O. A1 INITIAL DWG. RELEASE PARTS MADE PER E.O.	LEM-2	NOT	REQD			
	2	3						EO A2	ADDED NOTE 6		✓		A. ESPOSITO 5-9-66		
A	3	1, 1.10 2.01, 2.03, 2.04 4 & 5						EO A3	ON-1 REMOVED LDW280-10152-15 &-16 REPLACED WITH LDW280-10152-21 & 22 (ON SH 4 SECT S-S) ON SH5 ZONE AG-AG, HL18-5-10 (4) HL70-5 (4) WAS NAS1525-10 (4) NAS1080-D5 (4). ON SH4 DETAIL A HL18-5-5 (8) HL70-5 (8) WAS NAS1525-5 (8), NAS1080-D5 (8)						
	4	1, 1.10 4						EO A4	IN FLD OF DWG ON-1 SH 4 IN DETAIL A HL134-6-7 (4) MFG HEAD NEAR SIDE WAS FAR SIDE						
	5	1, 1.10 5						EO A5	(ON SH 5 VIEW AG-AG) IN FLD FOR -1 ASSY ADDED LDW280M10201 (REF) 3/8 DIA BACK SPOTFACE, .030 COR. R TO FLAT IN LDW280M10201.						
	1	1, 1.10 5						EO B1	IN FLD FOR -1 SH 5 CORRECTED SECTION Z-Z TO AGREE WITH DETAILS & SHOW PROPER LOCATION OF LDW 280-10298		✓				
	2	1, 1.10 & 3						EOB2	ADD NOTE 7						
	3	1, 1.10 4						EOB3	FOR -1 IN FLD (SH4 VIEW B-B) ADDED NOTE FLUSH FAR SIDE (CSK .225 ±.004 DIA) 3 PLACES						
B	4	1, 2.02 & 3						EO B4	ON-1 SH 3 LDW280-28051-3 WAS LDW280-28051-1						
	5	1, 1.10 2.02, 3						EO B5	ON-1 ASSY REMOVE LDW280-28051-1 AND ADD LDW280-28051-3						
	6	1, 1.10 4							REF E.O. B3 TWO OF THE THREE PLACES AS CALLED FOR IN E.O. ARE NOT ON DWG.		NOT	REQD			6/3
	7	1, 1.10 2.02, 3							REF E.O. B5 NOT APPLICABLE - PREVIOUSLY INC. ON E.O. B4.						
	8	1, 1.10, 2 THRU 2.04 3, 4 & 5						Ⓡ	REMOVED -1 ASSY & ADDED -3 ASSY			-1			

FOR CONTINUATION OF REVISIONS SEE SHEET 1.11

GRUMMAN AIRCRAFT ENGRG CORP, BETHPAGE, L. I., NEW YORK

SIZE	CODE IDENT NO.	DWG NO.	
B	26512	LDW280-52010	3
SCALE NONE			SHEET 1.10

77.3 5-65

01

NAS 9-1100

LDW280-52010 F

MODEL OR END ITEM	NEXT ASSY	MODULE OR SER NO.	REQD PER MODULE OR END ITEM
LEM	LDW280-52002	LEM-2(32)	1
PART NO. LDW280-52010-3		GAEC SCH NO. 311	

(5)

CONTRACT NO. NAS 9-1100
LINE ITEM #1
DOCUMENTATION TYPE II

SH REV STATUS: FOR DESCRIPTION OF REV SEE SUBQ SH

SHEET	1.00	1.10	1.11	2.00	2.01	2.02	2.03	2.04	1.12
REV	F	B	F	F	E	E	F	F	F
SHEET	3.00	4.00	5.00						
REV	F	F	F						
SHEET									
REV									

LAST SECT LTR USED AR
LAST DASH NO. USED -3
GRUMMAN REL INFO F
PRIM NO. 215 JN001 MP 1F 11/27/72

UNLESS OTHERWISE SPECIFIED DIMENSIONS ARE IN INCHES.
TOLERANCE UNLESS SPECIFIED FRACTIONS - DECIMALS - ANGLES
± 1/32 ±.020 ± 1/2°
ORIG DWG AUTH
DETAIL SPEC REQUIREMENT
CLASS II ENGRG CHANGE
CLASS I ENGRG CHANGE

DRAWN BY A. ESPOSITO 5-9-66
LAYOUT BY R. DiMARCO 6-2
CHECKED BY D. FASS 6-1-66
GR LEADER J. Puastenes 6-2
VEH DES INT 6/3
STRUCTURES 6/4
STRUCTURES HILDERMAN 6/4
WEIGHTS W. G. Mandrus 6/10
PROJ ENGR 13 Jun 66
REL GROUP 6-16

GRUMMAN AIRCRAFT ENGRG CORP
BETHPAGE, L. I., NEW YORK

CABIN ASSY
ASCENT STAGE

SIZE B
CODE IDENT NO. 26512
LDW280-52010 F
SCALE NONE
SHEET 1.00 OF 12

ENG 77.1 12-65

01

NAS 9-1100

REVISIONS FOR CONTINUATION OF REVISIONS SEE SHEET 1.12

CHANGE LTR	ITEM NO.	SHEET NO.	ZONE	GRUMMAN INFO ONLY	DET SPEC	CLASS I	CLASS II	ENGRG ORDER	DESCRIPTION	EFFECTIVITY	DISPOSITION OF EXISTING PARTS		CHANGED BY AND DATE	ENGRG APPD	GOVT APPD
											REWORK	SCRAP			
C	1	1, 1.11 2.03, 2.04, 4.00						EO C1	IN B/M & F/D REMOVE GR10HAD5-2(8) & GR10HAD 5-3 (3) & 5-147(11) IN F/D ADD CSK NOTE. SH. 1 OF 11 WAS SH. 1 OF 10, ADDED SH. 1.11	LEM-2(32)	✓		GARY KORDES 8-31-66		
	2	1.11 2.01, 2.03, 2.04 & 4						EO C2	ADDED LDW280-16032-1 & -3, ADDED RIVET CALLOUT, DELETED GR10H-AD5-2(4)	LEM-2(32)	✓				
	3	1.11, 2.04, 3, 4, 5							CHANGED COMMERCIAL CALLOUT TO GAEC. VENDOR APPROVED EQUIVILENT. DELETED NOTE 5.	NOT REQ'D	NOT	REQ'D			
	4	1.11, ~~4~~	11A						REF EOC1 & C2 ADDED DETAIL AJ (R.H. SIDE)	NOT REQ'D	NOT	REQD	F.H.		
D	1	1.11, 2.02, 3	7B					LEO 277	ADD LDW280-28315-1 & -2 TO LDW280-52010	LEM 2	NOT	REQ'D	FITZGERALD 11/22/66	12-12-66	12-13-66
	2	1.11, 2.03, 2.04 & 4	20B					EO D2	ON-1 REMOVED: 12 FASTENERS AS SHOWN (L.H. ONLY) ADD LDW340-52375(REF.)	LEM 2	✓				
	3	1.11 2.01, 2.02, 3.00	8A 10A 4A 7B 5B 4C 5C 13A						REMOVED FROM FLD & B/M LDW280M10115-1 & -2. IN FIELD & B/M LDW280-51023-1 WAS LDW280-28023-1. IN FLD & B/M ADDED CALLOUTS FOR LDW280M10064-1 & -17 & LDW280H23060-1. IN FLD & B/M ADDED ON SHT 3 LDW28051299-1, LDW280-28491-1, LDW280-28484-3 & 4, LDW280-28220-1 & 2, LDW280-28210-1, LDW280-23320-1 & 2, LDW280-23248-1, LDW280-23217-1 & -2.	LEM 2	NOT	REQ'D			
	4	1.11, 2.03 2.04 & 4	20B						REF EO D2 DESCRIPTION S/B -ON-3 REMOVED (39) GR10H-AD5-2 & GS570 J-3D FASTENERS. ADDED CALLOUT GR10H-AD5-2 (27) & GS570J-3D (27). ADDED CALLOUT GR10H-AD5-2 (12), GS 570 J-3D (12) R.H. SIDE. HR	LM-2	NOT	REQD			
E	1	1.11, 2.03 & 3, 1.00	9A					EO E1	ON-3, ADDED LDW280-51849-1 (1 REQD).	LM-2	✓		JAEGGI 10.21.67		
	2	1.11, 1, 2.01 2.03, 2.04 3, 4 & 5						EO E2	ADDED LDW280-11749-13, -15, -17, & -19 (1 EA), LDW280-11754-13(1) & LDW280-11210-13(1) ON-1 ASSY.						

CHG APPROVED LTR	GROUP LDR	VEH. DES. INT	STRUCTURES	STRUCTURES	WEIGHTS					
C	—	11/7/66	11-	11/9						
D	—	12-7-66	12-9	12/12						
E										
F										

GRUMMAN AIRCRAFT ENGRG CORP., BETHPAGE, L. I., NEW YORK

SIZE	CODE IDENT NO.		
B	26512	LDW280-52010	F

SCALE NONE

SHEET 1.11

ENG 77.16 3-66

01

NAS 9-1100

REVISIONS

CHANGE LTR	ITEM NO.	SHEET NO.	ZONE	GRUMMAN INFO ONLY	DET SPEC	CLASS I	CLASS II	ENGRG ORDER	DESCRIPTION	EFFECTIVITY	DISPOSITION OF EXISTING PARTS		CHANGED BY AND DATE	ENGRG APPD	GOVT APPD
											REWORK	SCRAP			
E	3	1.12, 1.00						LEO 280-435	ON INCORP. OF EO E2 "ON -3 ASSY" WAS "ON -1 ASSY". SH. 1 OF 12 WAS SH 1 OF 11. ADDED SH 1.12.	LM-2(32)	NOT	REQD	A. LITVINOFF 11-17-67		
	4	1.12, 1.00, 2.04, 4.00	12B					EO E4	ON-1 ASSY, REMOVED LDW280-11749-15.		✓				
	5	1.12, 1.00 2.02, 3	7B				✓	EO E5 LCD 1229	ON-1, LDW280-23217-3 AND -4 WAS -1 AND -2.						
	6	1.12, 1.00					✓	LEO 280-595	ON INCORP. OF EO E5, -3 ASSY WAS -1 ASSY.		NOT	REQD			
	7	1.12, 1.00, 2.00, 3.00	6A			✓		EO E7 LCD 1249 CCA 455	ON-1, IN B/M & FLD/DWG, ADDED LDW280-52899-1		✓				
	8					✓		EO E8 LCD 1249 CCA 455	REF EO E2, E4, E5 AND E7. ON-3 WAS -1						
	9	1.12 & 4.00	13A			✓		EO E9 LCD 1608A	ON-1 ASSY ADDED SECT. AN-AN & CALLOUT "OPEN EXISTING HOLE .374-.381 (3/8 DRILL).						
	10	1.12 4.00 2.00 203	22C			✓		EO E10 LCD 1594 (E)	ON-1 ADDED LDW280-11715-11-13 & -17 ADDED GR10HAD5(9) MS20470 AD4(2) NAS1097 AD4(2) NAS 696 A-08(5) NAS1097 AD 3(10) ADDED NOTE #8 ADDED VIEW "AP-AP" ADDED SECT "AR-AR"						
F	1	1.12 4.00 2.00 2.03	22C			✓		EO F1 LCD 1594	THIS IS A REVISION OF EO E10 ON-1 LDW280-11715-19 WAS LDW280-11715-13, GR10 HAD 5(4) & GS570J-3D(4) WAS GR10 HAD 5(5) & GS 570 J-3D(5)						
	2	1.12					✓	LEO 280-749	ON INCORP. OF EO E10 & F1, -3 WAS -1		NOT	REQD			
	3	1.12 4.00	13B	C		✓		EO F3 LCD 1608 A	REF EO E9 ON-3 INSTL WAS ON-1 IN FIELD OF EO CALL OUT LDW280M10076-1 & -2 (REF) WAS LDW280M10076-1 (REF)		✓				
	4	1.12 3.00 2.01	7B	G		✓		EOF4, LCD 2230 (E)	ON-3 LDW280-28484-9 & -10 WAS LDW280-28484-3 & -4				ES DP		
								E+F							

FOR CONTINUATION OF REVISIONS SEE SHEET ______

ENG 77.3 5-65

GRUMMAN AIRCRAFT ENGRG CORP, BETHPAGE, L. I., NEW YORK

SIZE	CODE IDENT NO.		
B	26512	LDW280-52010	F (F)
SCALE NONE			SHEET 1.12

01

NAS 9-1100

QTY PER ASSEMBLY						-3	CODE IDENT	PART NO.	I&T	NOMENCLATURE OR DESCRIPTION	MATERIAL	GOVT SPEC	COML SPEC	STOCK SIZE	PROCESS SYM	FINISH NO.	ZONE
						1		LDW280-52899-1		SUPPORT INSTL	SEE DWG						6A
						1		LDW280-10151-20	E	STIFFENER	SEE DWG						20A
						1		-19	↑	↑	↑						20A
						1		-18									21B
						1		-17									21B
						1		-16									20B
						1		-15									20B
						1		-14									20B
						1		-13									20B
						1		-12		↓							19B
						1		LDW280-10151-11		STIFFENER							19B
						1		LDW280-11715-19		CHANNEL							22C
						1		LDW280-11715-17		TEE							22B
						1		LDW280-10148-16		CLIP							24C
						1		-15		↑							24C
						1		-14		↓							24C
						1		LDW280-10148-13		CLIP							24C
						1		LDW280-11715-11		CHANNEL							22C
						1		LDW280-10147-24		CLIP							24A
						1		-23		↑							24A
						1		-20									24B
						1		-19									24B
						1		-18		↓							24B
						1		LDW280-10147-17		CLIP							24B
						1		LDW280-11749-19		PLATE							23A
						1		LDW280-11749-17		PLATE	↓						23A
						1		LDW280-11749-13	↓	TEE	SEE DWG						23A
								LDW280-52010-3	E	CABIN ASSY					NONE	NONE	9A

SYM OR NO.	PROCESS OR FINISH	GRUMMAN SPEC OR MILITARY SPEC	SYM OR NO.	PROCESS OR FINISH	GRUMMAN SPEC OR MILITARY SPEC	SYM OR NO.	PROCESS OR FINISH	GRUMMAN SPEC OR MILITARY SPEC

I & T: IDENTIFICATION AND TRACEABILITY IN ACCORDANCE WITH : NONE

GRUMMAN AIRCRAFT ENGRG CORP, BETHPAGE, L. I., NEW YORK

SIZE	CODE IDENT NO.		
B	26512	LDW280-52010	F Ⓕ

SCALE NONE SHEET 2.00

ENG 77.2 7-65

01

NAS 9-1100

QTY PER ASSEMBLY																	
						-3	CODE IDENT	PART NO.	I&T	NOMENCLATURE OR DESCRIPTION	MATERIAL	GOVT SPEC	COML SPEC	STOCK SIZE	PROCESS SYM	FINISH NO.	ZONE
						1		LDW280-28049-1	E	LONGERON INSTL	SEE DWG						5A
						1		LDW280-52899-1		SUPPORT INSTL							6A
						1		LDW280-28048-2		LONGERON INSTL							4C
						1		LDW280-28048-1		LONGERON INSTL							4C
						1		LDW280-28210-1		SUPPORT INSTL							7B
						1		LDW280-28047-2		LONGERON INSTL							4B
						1		LDW280-28047-1		LONGERON INSTL							4B
						1		LDW280-28220-1		SUPPORT INSTL							5B
						1		LDW280-28220-2		SUPPORT INSTL							5B
						1		LDW280-28031-2		BEAM INSTL							4C
						1		LDW280-28031-1		BEAM INSTL							4C
						1		LDW280-28484-9		FRAME INSTL							7B
						1		LDW280-28484-10		FRAME INSTL							7B
						1		LDW280-28025-1		LONGERON INSTL							10A
						1		LDW280-51023-1		WINDOW INSTL							13C
						1		LDW280-28491-1		SUPPORT INSTL							10A
						1		LDW280-23219-2		HATCH ADPT INSTL							9B
						1		LDW280-23219-1		HATCH ADPT INSTL							9A
						1		LDW280-23191-2		RESTRAINT INSTL							10A
						1		LDW280-23191-1		RESTRAINT INSTL							8A
						1		LDW280-10298-12		CLIP							25B
						1		LDW280-10298-11		CLIP							25B
						1		LDW280-16032-3		CLIP							20A
						1		LDW280-16032-1		CLIP							20A
						1		LDW280-10152-22		STIFFENER							18D
						1		-21									18D
						1		-14									20A
						1		-13									20A
						1		-12									20B
						1		LDW280-10152-11	E	STIFFENER	SEE DWG						20B

SYM OR NO.	PROCESS OR FINISH	GRUMMAN SPEC OR MILITARY SPEC	SYM OR NO.	PROCESS OR FINISH	GRUMMAN SPEC OR MILITARY SPEC	SYM OR NO.	PROCESS OR FINISH	GRUMMAN SPEC OR MILITARY SPEC

I & T: IDENTIFICATION AND TRACEABILITY IN ACCORDANCE WITH : NONE

GRUMMAN AIRCRAFT ENGRG CORP, BETHPAGE, L. I., NEW YORK

SIZE B
CODE IDENT NO. 26512
LDW280-52010 F Ⓕ

SCALE NONE
SHEET 2.01

ENG 77.2 7-65

01

NAS 9-1100

						1		LDW280M10121-2	E	FITTING	SEE DWG						27B
						1		LDW280M10121-1		FITTING							27B
						1		LDW280-23217-4		BRACKET INSTL							7B
						1		LDW280-23217-3		BRACKET INSTL							7B
						1		LDW280M10064-17		FITTING							10A
						1		LDW280M10064-1									8A
						1		LDW280M10076-2									14B
						1		LDW280M10076-1									14B
						1		LDW280M10069-2									20D
						1		LDW280M10069-1									20D
						1		LDW280M11210-13									23A
						1		LDW280M10047-2									21B
						1		LDW280M10047-1									21B
						1		LDW280M11210-13									23A
						1		LDW280M10023-2									19C
						1		LDW280M10023-1									19C
						1		LDW280M10252-2									14B
						1		LDW280M10252-1		FITTING							14B
						1		LDW280-28114-1		CANTED FRAME INSTL							5C
						1		LDW280H23060-1		FLOOR ASS'Y							4A
						1		LDW280-23248-1		SUPPORT INSTL							4C
						1		LDW280-28090-2		FITTING ASSY							6A
						1		LDW280-28090-1		FITTING ASSY							6A
						1		LDW280-23320-2		SUPPORT INSTL							10A
						1		LDW280-23320-1		SUPPORT INSTL							8A
						1		LDW280-52075-1		FRONT FACE ASSY							7B
						1		LDW280-51299-1		SUPPORT INSTL							10A
						1		LDW280-28315-2		DOCKING LIGHT INSTL							7B
						1		LDW280-28315-1		DOCKING LIGHT INSTL							7B
						1		LDW280-28051-3	E	CABIN SKIN INSTL	SEE DWG						4B
QTY PER ASSEMBLY						-3	CODE IDENT	PART NO.	I&T	NOMENCLATURE OR DESCRIPTION	MATERIAL	GOVT SPEC	COML SPEC	STOCK SIZE	PROCESS SYM	FINISH NO.	ZONE

SYM OR NO.	PROCESS OR FINISH	GRUMMAN SPEC OR MILITARY SPEC	SYM OR NO.	PROCESS OR FINISH	GRUMMAN SPEC OR MILITARY SPEC	SYM OR NO.	PROCESS OR FINISH	GRUMMAN SPEC OR MILITARY SPEC

I & T: IDENTIFICATION AND TRACEABILITY IN ACCORDANCE WITH :
NONE

GRUMMAN AIRCRAFT ENGRG CORP, BETHPAGE, L. I., NEW YORK

SIZE	CODE IDENT NO.		
B	26512	LDW280-52010	F
SCALE NONE		SHEET 2.02	

ENG 77.2 7-65

01

NAS 9-1100

QTY PER ASSEMBLY -3	CODE IDENT	PART NO.	I&T	NOMENCLATURE OR DESCRIPTION	MATERIAL	GOVT SPEC	COML SPEC	STOCK SIZE	PROCESS SYM	FINISH NO.	ZONE
8		NAS1143-5	E	BOLT	STD PART						
4		NAS673V3		BOLT							
		NAS1097 AD4		RIVET							
5		NAS696A-08		NUT PLATE							
8		MS21042-3		NUT							
		NAS1097 AD3		RIVET							
		MS20470DD5		RIVET							
		NAS1097 DD5		RIVET							
		MS20470AD6		RIVET							
		MS20470AD5		RIVET							
		MS20470AD4		RIVET							
16		AN960D-10		WASHER	STD PART						
4		AN960D10L		WASHER	STD PART						
12		GW10G-3		WASHER	GRUMMAN STD						
8		GS570J-3D		SEAL							
31		GR10H-AD5-3		RIVET							
56		GR10H-AD5-2		RIVET							
8		GR10H-AD5		RIVET							
8		GN512H-4		COLLAR							
166		GN512H-3									
4		GN511C-3									
14		GN512G-3		COLLAR	GRUMMAN STD						
1		LDW280-11754-13		CLIP	SEE DWG						24A
1		LDW280-51849-1		CLAMP & RELEASE INSTL	SEE DWG						9A
1		LDW280M10252-2		FITTING	SEE DWG						14A
1		LDW280M10252-1	E	FITTING	SEE DWG						14A

SYM OR NO.	PROCESS OR FINISH	GRUMMAN SPEC OR MILITARY SPEC	SYM OR NO.	PROCESS OR FINISH	GRUMMAN SPEC OR MILITARY SPEC	SYM OR NO.	PROCESS OR FINISH	GRUMMAN SPEC OR MILITARY SPEC

I & T: IDENTIFICATION AND TRACEABILITY IN ACCORDANCE WITH : NONE

GRUMMAN AIRCRAFT ENGRG CORP, BETHPAGE, L. I., NEW YORK

SIZE	CODE IDENT NO.		
B	26512	LDW280-52010	F (F)

SCALE NONE SHEET 2.03

ENG 77.2 7-65

01

NAS 9-1100

QTY PER ASSEMBLY -3	CODE IDENT	PART NO.	I&T	NOMENCLATURE OR DESCRIPTION	MATERIAL	GOVT SPEC	COML SPEC	STOCK SIZE	PROCESS SYM	FINISH NO.	ZONE
8		GB511R-3-8		BOLT	GRUMMAN STD						
8		GB511R-3-7									
18		GB511R-3-6									
6		GB511R-3-5									
4		GB511S-4-10									
4		GB511S-4-3									
18		GB511S-3-6									
14		GB511S-3-4									
44		GB511S-3-3									
6		GB511S-3-2		BOLT							
12		GS570P-3		SEAL							
4		GS570J-5D		O- RING SEAL							
116		GS570J-2D		O- RING SEAL							
87		GS570J-3D		O - RING SEAL							
24		GN512H-08		NUT COLLAR							
8		GB511D-08-10		BOLT							
16		GB511D-08-5									
6		GB511K-3-6									
42		GB511K-3-4									
10		GB511K-3-3	E	BOLT	GRUMMAN STD						
1		LDW280-11749-19		PLATE	SEE DWG						23B
1		LDW280-11749-17		PLATE	SEE DWG						12B
1		LDW280-11749-13		TEE	SEE DWG						12B

SYM OR NO.	PROCESS OR FINISH	GRUMMAN SPEC OR MILITARY SPEC	SYM OR NO.	PROCESS OR FINISH	GRUMMAN SPEC OR MILITARY SPEC	SYM OR NO.	PROCESS OR FINISH	GRUMMAN SPEC OR MILITARY SPEC

I & T: IDENTIFICATION AND TRACEABILITY IN ACCORDANCE WITH :
NONE

GRUMMAN AIRCRAFT ENGRG CORP, BETHPAGE, L. I., NEW YORK

SIZE B
CODE IDENT NO. 26512
LDW280-52010 F (F)
SCALE NONE
SHEET 2.04

ENG 77.2 7-65

01

NAS 9-1100

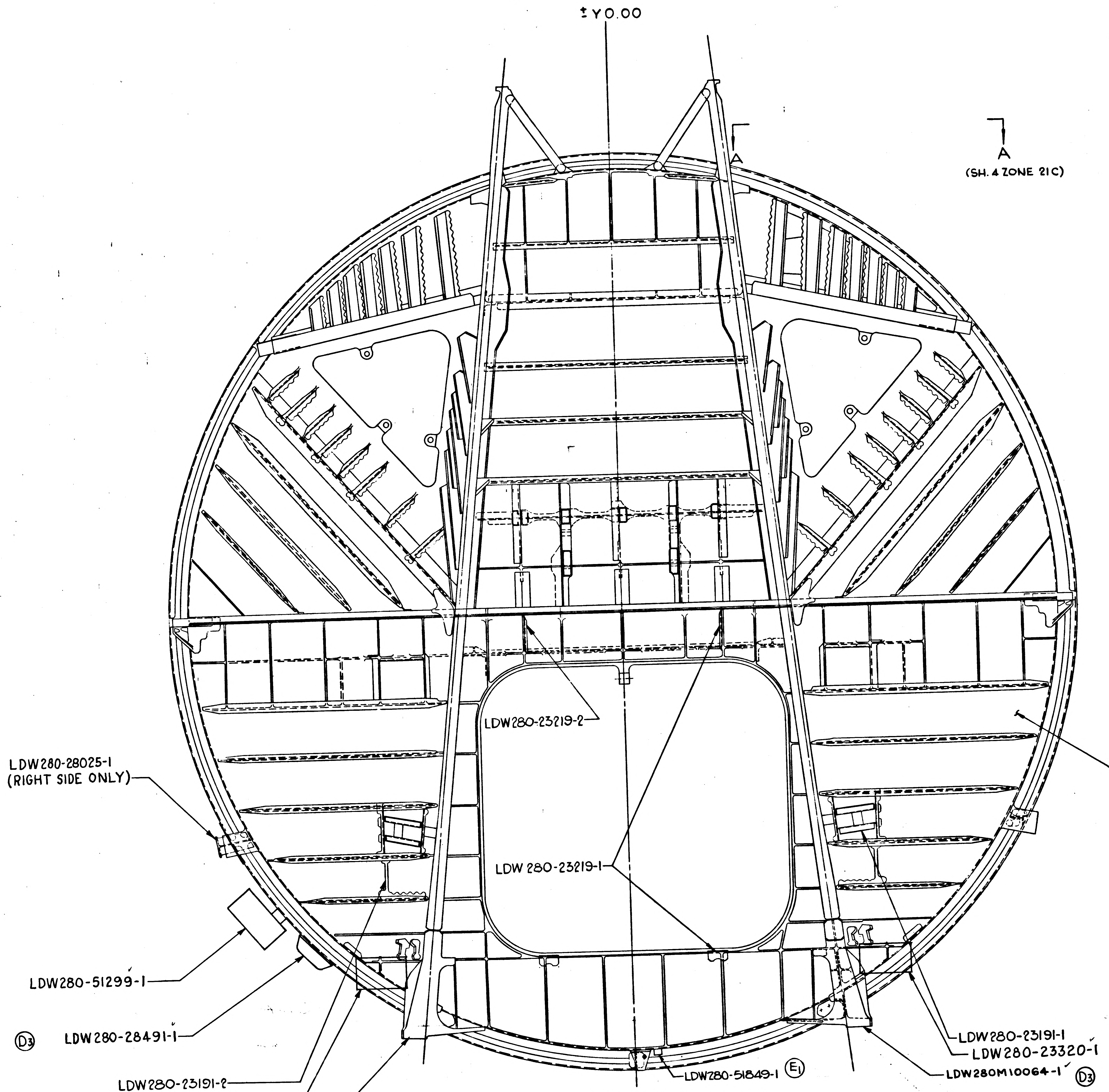
±Y0.00
A
LDW280-23219-2
LDW280-23219-1
LDW280-52075-1
LDW280-28025-1
(RIGHT SIDE ONLY)
LDW280-51299-1
Ⓓ3
LDW280-28491-1
LDW280-23191-2
LDW280-23320-2
Ⓓ3
LDW280M10064-17
LDW280-51849-1 Ⓔ1
LDW280-23191-1
LDW280-23320-1
LDW280M10064-1 Ⓓ3

VIEW C-C (ZONE 6A)

Ⓑ6

LDW280-52010-3 ASSY
VIEW LOOKING AFT

A
(SH. 4 ZONE 21C)

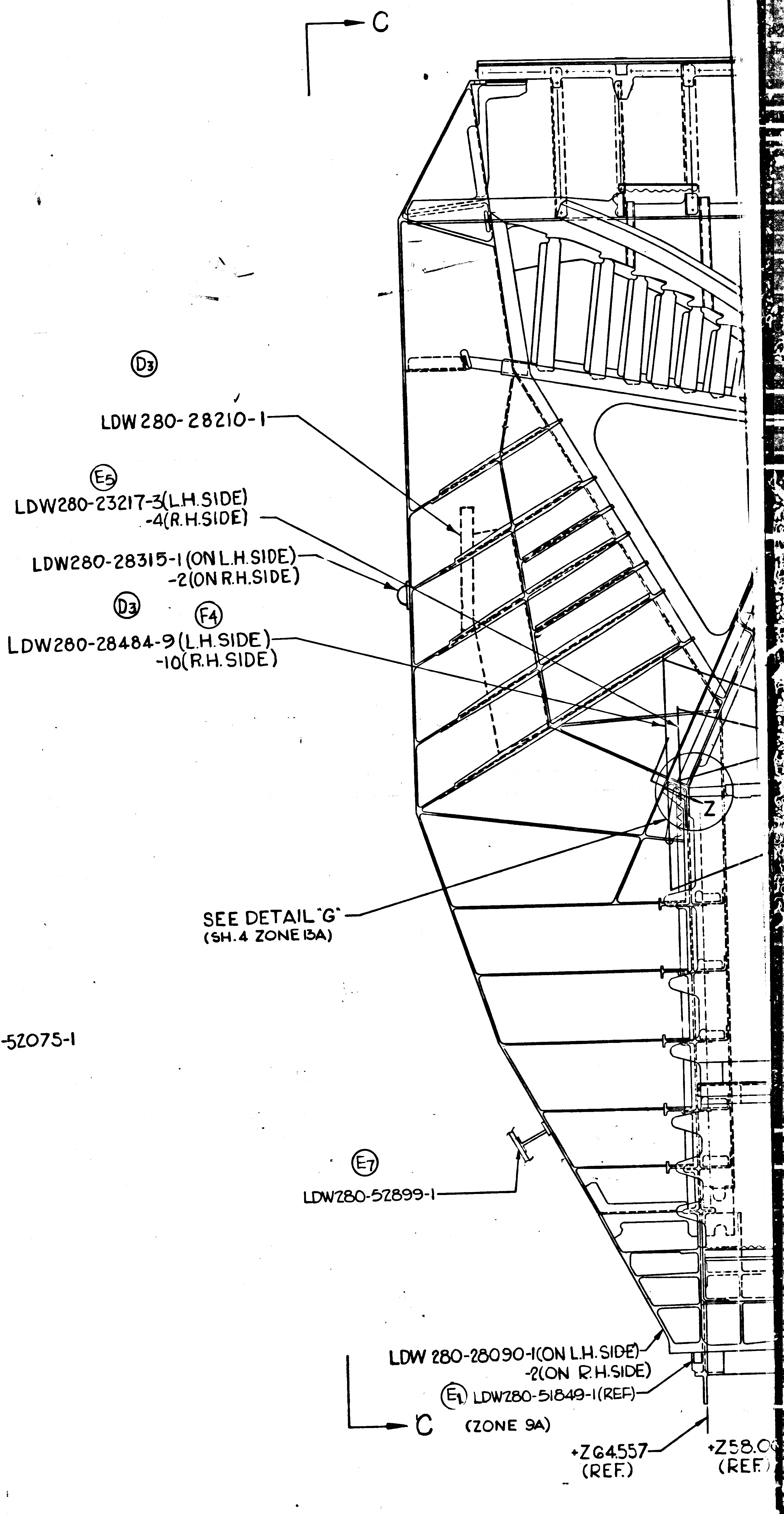
C
Ⓓ3
LDW280-28210-1
Ⓔ5
LDW280-23217-3(L.H.SIDE)
-4(R.H.SIDE)
LDW280-28315-1(ON L.H.SIDE)
-2(ON R.H.SIDE)
Ⓓ3 Ⓕ4
LDW280-28484-9(L.H.SIDE)
-10(R.H.SIDE)
Z
SEE DETAIL "G"
(SH. 4 ZONE 13A)
Ⓔ7
LDW280-52899-1
LDW 280-28090-1(ON L.H.SIDE)
-2(ON R.H.SIDE)
Ⓔ1 LDW280-51849-1(REF)
C (ZONE 9A)
+Z64.557
(REF.)
+Z58.C
(REF.

01703

NAS 9-1100

CODE IDENT. NO. 26512	SH
LDW280-52010	3

3/3

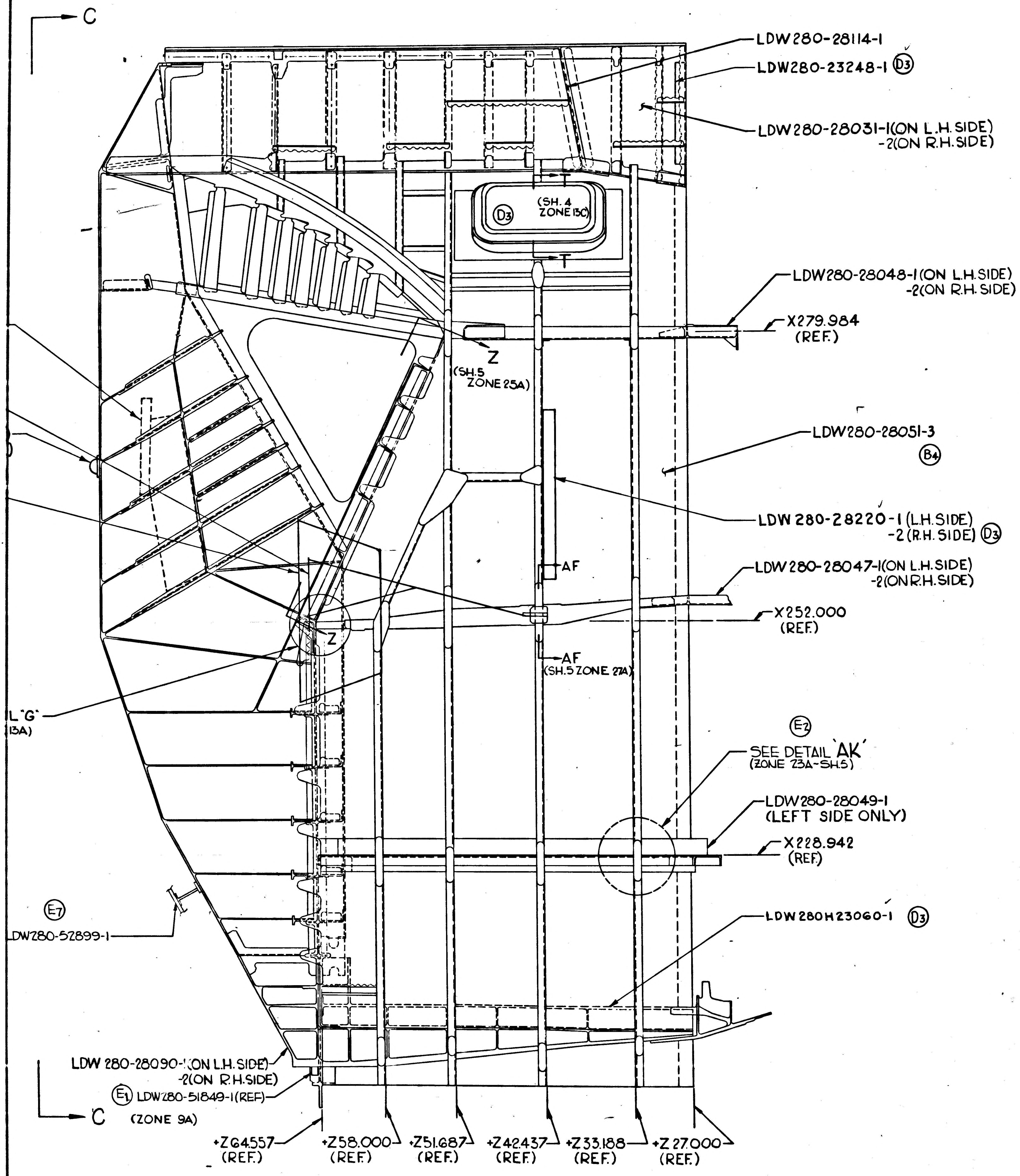
C
LDW280-28114-1
LDW280-23248-1 (D3)
LDW280-28031-1(ON L.H.SIDE)
-2(ON R.H.SIDE)
(SH.4 ZONE 13C)
(D3)
T
LDW280-28048-1(ON L.H.SIDE)
-2(ON R.H. SIDE)
X279.984 (REF.)
Z
(SH.5 ZONE 25A)
LDW280-28051-3 (B4)
LDW 280-28220-1 (L.H.SIDE)
-2 (R.H. SIDE) (D3)
AF
LDW 280-28047-1(ON L.H.SIDE)
-2(ON R.H.SIDE)
X252.000 (REF.)
Z
AF (SH.5 ZONE 27A)
L'G'
(3A)
(E2)
SEE DETAIL 'AK' (ZONE 23A-SH.5)
LDW280-28049-1 (LEFT SIDE ONLY)
X228.942 (REF.)
(E7)
LDW280-52899-1
LDW 280H23060-1 (D3)
LDW 280-28090-1(ON L.H.SIDE)
-2(ON R.H.SIDE)
(E1) LDW280-51849-1(REF)
(ZONE 9A)
C
+Z64.557 (REF.)
+Z58.000 (REF.)
+Z51.687 (REF.)
+Z42.437 (REF.)
+Z33.188 (REF.)
+Z 27.000 (REF.)

SYMBOL LEGEND

⌖ } SYMBOLS ARE FOR LOCATION 4Q'TY ONLY
● }
⌖

NOTES:

1-SEAL FAYING SURFACES PER LSP 14-14102
2-SHIM AS REQD USING AL. ALLOY QQ-A-250/4 2024-T3, FINISH #76
3. INSTALL GB511K, GB511S, GB511D, GB511R PER LSP 14-15306
4-SQUEEZE MS20470 RIVETS THRU INTEGRAL FLANGES OF MACHINED PARTS
~~5-STAT-O-SEAL MAT'L & 'O'-RING MAT'L IS COMPOUND 6-418-6 SILICONE~~
6-WHERE GB510B-08-2 IS CALLED OUT GB510B-08-4 AND AN960D8(2) MAYBE USED.
WHERE NAS 1143-5 IS CALLED OUT NAS1218-3C5 MAYBE USED.
WHERE GB511S-3-4 IS CALLED OUT GB511D3-6 GS570P-3, GW10G-3, GN512H-3 MAYBE USED.
WHERE GB511R-3-8 IS CALLED OUT GB511D3-10 GS570P-3, GW10G-3, GN512H-3 MAYBE USED.
WHERE GB511R-3-7 IS CALLED OUT GB511D3-9 GS570P-3, GW10G-3, GN512H-3 MAYBE USED.
WHERE GB511K-08-9 IS CALLED OUT GB511D-08-9 OR GB511DPB-08-9 MAYBE USED
WHERE GB511K-08-10 IS CALLED OUT GB511D-08-10 OR GB511DPB-08-10 MAYBE USED.
WHERE GB511S-08-3 IS CALLED OUT, GB511D-08-5 GS570P-08, GW10G-2 MAY BE USED.
7- INSTALLATION OF GR10HAD4 AND GR10HAD5 RIVETS SHALL ALSO BE CONSIDERED ACCEPTABLE EVEN THOUGH A PORTION OF THE 'O' RING EXTENDS BEYOND THE PERIPHERY OF THE RIVET HEAD.
8 FOR HOLES MARKED ▲ SEE DWG NO. LDW390-10322 FOR CORRESPONDING HOLE PATTERN.

02/03 NAS 9-1100

CODE IDENT NO 26512	
LDW280-52010	SH 3

CODE IDENT NO 26512	
LDW280-52010	SH 3

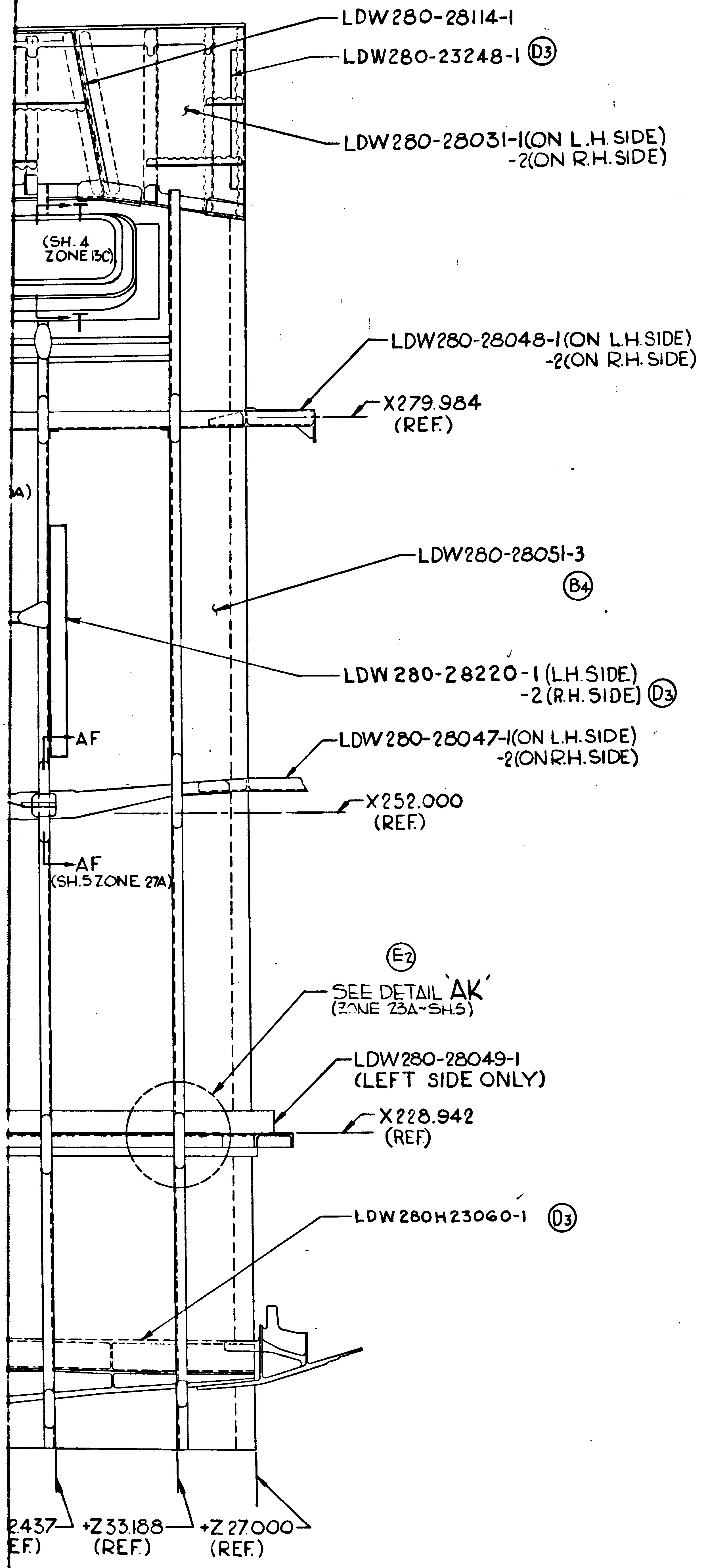
LDW280-28114-1
LDW280-23248-1 (D3)
LDW280-28031-1(ON L.H.SIDE)
-2(ON R.H.SIDE)
(SH. 4 ZONE 15C)
LDW280-28048-1(ON L.H.SIDE)
-2(ON R.H.SIDE)
X279.984
(REF.)
LDW280-28051-3
(B4)
LDW 280-28220-1 (L.H.SIDE)
-2 (R.H. SIDE) (D3)
AF
LDW 280-28047-1(ON L.H.SIDE)
-2(ON R.H.SIDE)
X252.000
(REF.)
AF
(SH.5 ZONE 27A)
(E2)
SEE DETAIL 'AK'
(ZONE 23A-SH.5)
LDW280-28049-1
(LEFT SIDE ONLY)
X228.942
(REF.)
LDW 280H23060-1 (D3)
2437
(REF.)
+Z33.188
(REF.)
+Z 27.000
(REF.)

SYMBOL LEGEND

SYMBOLS ARE FOR LOCATION & QTY ONLY

NOTES:

1-SEAL FAYING SURFACES PER LSP 14-14102
2-SHIM AS REQD USING AL. ALLOY QQ-A-250/4 2024-T3, FINISH #76
3. INSTALL GB511K, GB511S, GB511D, GB511R PER LSP 14-15306
4-SQUEEZE MS20470 RIVETS THRU INTEGRAL FLANGES OF MACHINED PARTS
~~5-STAT-O-SEAL MAT'L & 'O' RING MAT'L IS COMPOUND S-418-6 SILICONE~~
6-WHERE GB510B-08-21S CALLED OUT GB510B-08-4 AND AN960D8(2) MAYBE USED.
WHERE NAS 1143-5 IS CALLED OUT NAS1218-3C5 MAYBE USED.
WHERE GB511S-3-4 IS CALLED OUT GB511D3-6 GS570P-3, GW10G-3, GN512H-3 MAYBE USED.
WHERE GB511R-3-8 IS CALLED OUT GB511D3-10 GS570P-3, GW10G-3, GN512H-3 MAYBE USED.
WHERE GB511R-3-7 IS CALLED OUT GB511D3-9 GS570P-3, GW10G-3, GN512H-3 MAYBE USED.
WHERE GB511K-08-9 IS CALLED OUT GB511D-08-9 OR GB511DPB-08-9 MAYBE USED
WHERE GB511K-08-10 IS CALLED OUT GB511D-08-10 OR GB511DPB-08-10 MAYBE USED.
WHERE GB511S-08-3 IS CALLED OUT, GB511D-08-5 GS570P-08, GW10G-2 MAY BE USED.
7- INSTALLATION OF GR10HAD4 AND GR10HAD5 RIVETS SHALL ALSO BE CONSIDERED ACCEPTABLE EVEN THOUGH A PORTION OF THE "O" RING EXTENDS BEYOND THE PERIPHERY OF THE RIVET HEAD.
8 FOR HOLES MARKED ▲ SEE DWG NO. LDW390-10322 FOR CORRESPONDING HOLE PATTERN.

MANUFACTURING OPERATIONS

UNLESS OTHERWISE SPECIFIED NOTES CHECKED √ APPLY TO THIS DWG.

PART NUMBER AND ALL OTHER MARKINGS IN REGION MARKED ☒ USE BOTH SIDES IF NECESSARY.	
FILLET AND INSIDE CORNER RADII TOLERANCES .016R TO .062R ± .010 .063R TO .250R ± .015 OVER .250R ± .030	
DEPTH SHOWN FOR TAPPED HOLES IS FULL THDS. 2-3 IMP THDS. BEYOND PERMISSIBLE.	
EXTERNAL THREAD LENGTH SHOWN INCLUDES 2 IMPERFECT THREADS MAX.	
DO NOT CADMIUM PLATE & PAINT HOLES OR SURFACES MARKED WITH DOUBLE ASTERISK.	
MISMATCH STEP OF ± .005 PERMISSIBLE DUE TO CHANGE OF CUTTERS AT INSIDE INTERSECTING SURFACES.	
DIAMETERS MARKED MUST BE CONCENTRIC WITHIN FULL INDICATOR READING	
HOLES MUST BE KEPT FREE OF CHROME PLATING SOLUTION.	
ALL DIMENSIONS SHOWN TO BE MET AFTER CADMIUM PLATING. THICKNESS OF PLATE .0003 MIN. TO .0005 MAX. MIN. THICKNESS TO BE .0002 ON THREADED AREAS. NO ALLOWANCE FOR PLATING IN HOLES	
125√ SURFACE ROUGHNESS INCLUDING REAMED HOLES PER MIL-STD-10	
200√ FOR ALL DRILLED HOLES	
REMOVE ALL BURRS. BREAK ALL EDGES .015-.031	
INSPECTION INFORMATION MINIMUM PERMISSIBLE AVERAGE EDGE DISTANCE MARKED IS	
SYMBOL √ DENOTES SURFACE TO BE MACHINED	
UNLESS OTHERWISE SPECIFIED TOLERANCE ON FLANGES IS ± 1/32	
LENGTHS OF AN, NAS & MS AL ALY RIVETS SHORTER THAN 1 INCH ARE NOT SPECIFIED.	
TOLERANCE ON LOFTED DELINEATIONS IS	

DWG SIZE 34 X 100

PRINTING INFO ONLY
FULL SIZE SHEET AREA (36 X 102) = 25.5 SQ. FT.
1/2 SIZE SHEET AREA (1/4 OF FULL) = 6.37 SQ. FT.

PRINT TRIM LINE

LDW280-52010 F

LDW280-52010 F

03/03

NAS 9-1100

CODE IDENT. NO. 26512
LDW280-52010 SH 3

GRUMMAN AIRCRAFT ENGRG CORP., BETHPAGE, L. I., NEW YORK

MODEL OR END ITEM	SIZE	CODE IDENT NO.		
LEM	J	26512	LDW280-52010	F
	SCALE 1/4		SHEET 3.00	

ENG 73.7 6-64

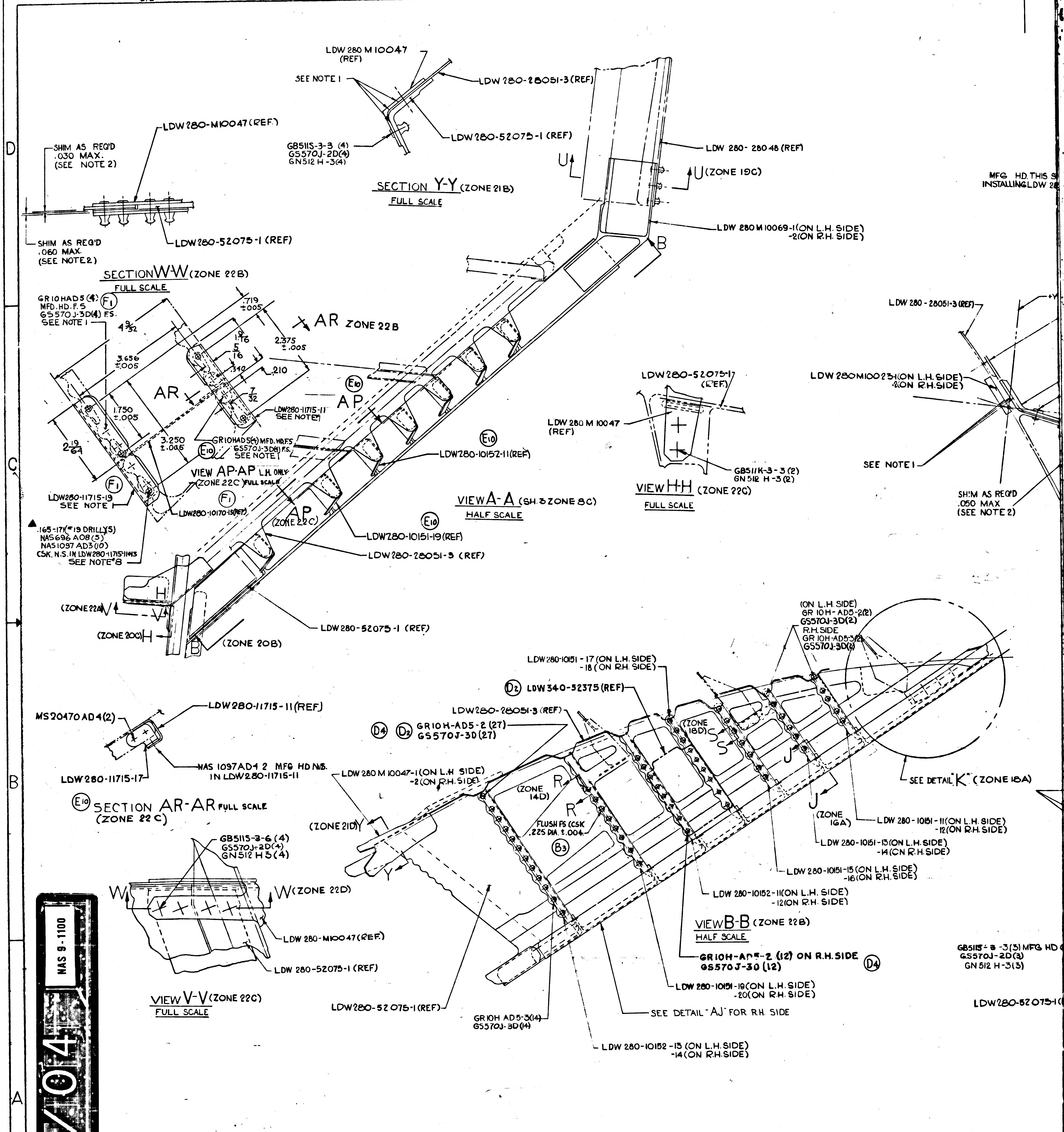
LDW 280 M 10047 (REF)
SEE NOTE 1
LDW 280-28051-3 (REF)
GB511S-3-3 (4)
GS570J-2D(4)
GN512 H-3(4)
LDW 280-52075-1 (REF)
SECTION Y-Y (ZONE 21B)
FULL SCALE
LDW 280-M10047 (REF)
SHIM AS REQ'D
.030 MAX.
(SEE NOTE 2)
LDW 280-52075-1 (REF)
SHIM AS REQ'D
.060 MAX.
(SEE NOTE 2)
LDW 280-28048 (REF)
U
U (ZONE 19C)
LDW 280 M 10069-1 (ON L.H. SIDE)
-2 (ON R.H. SIDE)
B
SECTION W-W (ZONE 22B)
FULL SCALE
GR10HAD5 (4) MFD. HD. F.S
GS570J-3D(4) F.S.
SEE NOTE 1
F1
4 9/32
.719 ±.005
AR ZONE 22B
1 9/16
5/16
2.375 ±.005
3.656 ±.005
.340
.210
AR
7/32
1.750 ±.005
LDW280-11715-11
SEE NOTE 1
2 19/64
3.250 ±.005
GR10HAD5(4) MFD. HD. F.S
GS570J-3D(4) F.S.
SEE NOTE 1
E10
VIEW AP-AP L.H. ONLY
(ZONE 22C) FULL SCALE
F1
LDW280-11715-19
SEE NOTE 1
LDW280-10170-15(REF)
▲ .165-.171 (#19 DRILL)(5)
NAS696 A08 (5)
NAS1097 AD3 (10)
CSK. N.S. IN LDW280-11715-11&13
SEE NOTE 8
AP
AP
(ZONE 22C)
E10
LDW280-10152-11 (REF)
VIEW A-A (SH. 3 ZONE 8C)
HALF SCALE
E10
LDW280-10151-19 (REF)
LDW280-28051-3 (REF)
H
(ZONE 22A) V
V
(ZONE 20C) H
LDW 280-52075-1 (REF)
B
(ZONE 20B)
LDW280-52075-1
(REF)
LDW 280 M 10047
(REF)
GB511K-3-3 (2)
GN 512 H-3 (2)
VIEW H-H (ZONE 22C)
FULL SCALE
LDW 280-28051-3 (REF)
LDW 280M10023-1 (ON L.H. SIDE)
-2 (ON R.H. SIDE)
SEE NOTE 1
SHIM AS REQ'D
.050 MAX
(SEE NOTE 2)
MS20470 AD4 (2)
LDW280-11715-11 (REF)
LDW280-11715-17
NAS 1097AD4 2 MFG HD N.S.
IN LDW280-11715-11
E10 SECTION AR-AR FULL SCALE
(ZONE 22C)
GB511S-3-6 (4)
GS570J-2D(4)
GN512 H 3 (4)
W
W (ZONE 22D)
LDW 280-M10047 (REF)
LDW 280-52075-1 (REF)
VIEW V-V (ZONE 22C)
FULL SCALE
(ON L.H. SIDE)
GR 10H-AD5-2(2)
GS570J-3D(2)
R.H. SIDE
GR 10H-AD5-3(2)
GS570J-3D(2)
LDW280-10151-17 (ON L.H. SIDE)
-18 (ON R.H. SIDE)
D2 LDW340-52375 (REF)
LDW280-28051-3 (REF)
D4 D2 GR10H-AD5-2 (27)
GS570J-3D (27)
LDW 280 M 10047-1 (ON L.H SIDE)
-2 (ON R.H. SIDE)
(ZONE 21D) Y
Y
(ZONE 14D)
R
R
FLUSH FS (CSK
.225 DIA. ±.004
B3
(ZONE 18D)
S
S
J
J
(ZONE 16A)
SEE DETAIL "K" (ZONE 18A)
LDW 280-10151-11 (ON L.H. SIDE)
-12 (ON R.H. SIDE)
LDW 280-10151-13 (ON L.H. SIDE)
-14 (ON R.H. SIDE)
LDW 280-10151-15 (ON L.H. SIDE)
-16 (ON R.H. SIDE)
LDW 280-10152-11 (ON L.H. SIDE)
-12 (ON R.H. SIDE)
VIEW B-B (ZONE 22B)
HALF SCALE
GR10H-AD5-2 (12) ON R.H. SIDE
GS570J-3D (12)
D4
LDW 280-10151-19 (ON L.H. SIDE)
-20 (ON R.H. SIDE)
SEE DETAIL "AJ" FOR R.H. SIDE
LDW280-52075-1 (REF)
GR10H AD5-3(14)
GS570J-3D(14)
LDW 280-10152-13 (ON L.H. SIDE)
-14 (ON R.H. SIDE)

01/04 NAS 9-1100

4/4

CODE IDENT NO. 26512	SH
LDW280-52010C	4

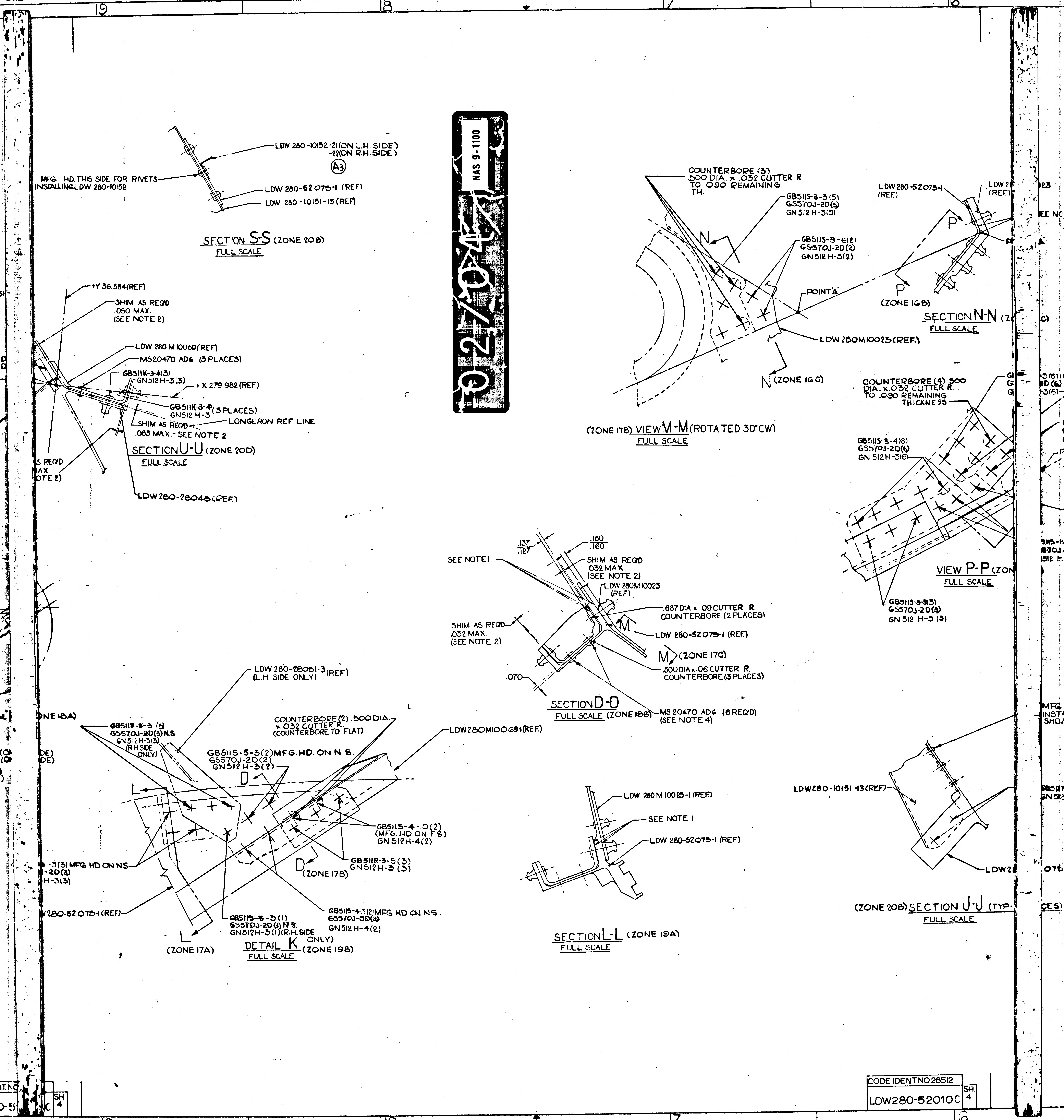
19
18
17
16
NAS 9-1100
02/04
MFG HD. THIS SIDE FOR RIVETS INSTALLING LDW 280-10152
LDW 280-10152-21 (ON L.H. SIDE) -22 (ON R.H. SIDE)
A3
LDW 280-52075-1 (REF)
LDW 280-10151-15 (REF)
SECTION S-S (ZONE 20B)
FULL SCALE
+Y 36.584 (REF)
SHIM AS REQ'D .050 MAX. (SEE NOTE 2)
LDW 280 M 10069 (REF)
MS20470 AD6 (3 PLACES)
GB511K-3-4(3)
GN512 H-3(3)
+X 279.982 (REF)
GB511K-3-4
GN512 H-3 (3 PLACES)
SHIM AS REQ'D .063 MAX. - SEE NOTE 2
LONGERON REF LINE
SECTION U-U (ZONE 20D)
FULL SCALE
LDW 280-28048 (REF)
COUNTERBORE (3) .500 DIA. x .032 CUTTER R TO .090 REMAINING TH.
GB511S-3-3(5)
GS570J-2D(5)
GN 512 H-3(5)
GB511S-3-6(2)
GS570J-2D(2)
GN 512 H-3(2)
N
POINT 'A'
LDW 280M10025 (REF.)
N (ZONE 16 C)
(ZONE 17B) VIEW M-M (ROTATED 30°CW)
FULL SCALE
LDW 280-52075-1 (REF.)
P
P (ZONE 16B)
SECTION N-N
FULL SCALE
COUNTERBORE (4) .500 DIA. x .032 CUTTER R. TO .090 REMAINING THICKNESS
GB511S-3-4(6)
GS570J-2D(6)
GN 512 H-3(6)
VIEW P-P
FULL SCALE
GB511S-3-3(3)
GS570J-2D(3)
GN 512 H-3 (3)
SEE NOTE 1
.137 / .127
.180 / .160
SHIM AS REQ'D .032 MAX. (SEE NOTE 2)
LDW 280M 10023 (REF)
.687 DIA x .09 CUTTER R. COUNTERBORE (2 PLACES)
M
LDW 280-52075-1 (REF)
M (ZONE 17C)
.500 DIA x .06 CUTTER R. COUNTERBORE (3 PLACES)
SHIM AS REQ'D .032 MAX. (SEE NOTE 2)
.070
SECTION D-D
FULL SCALE (ZONE 18B)
MS 20470 AD6 (6 REQ'D) (SEE NOTE 4)
LDW 280M10069-1 (REF.)
LDW 280-28051-3 (REF) (L.H. SIDE ONLY)
GB511S-3-3 (3)
GS570J-2D(3) N.S.
GN 512H-3(3) (R.H. SIDE ONLY)
COUNTERBORE (2) .500 DIA. x .032 CUTTER R. (COUNTERBORE TO FLAT)
GB511S-3-3(2) MFG. HD. ON N.S.
GS570J-2D(2)
GN512 H-3(2)
D
L
GB511S-4-10(2) (MFG. HD. ON F.S.)
GN512H-4(2)
GB511R-3-5 (3)
GN512H-3 (3)
D (ZONE 17B)
-3(3) MFG HD ON NS
-2D(3)
H-3(3)
LDW 280-52075-1 (REF)
GB511S-3-3(1)
GS570J-2D(1) N.S.
GN512H-3(1) (R.H. SIDE ONLY)
GB511S-4-3(2) MFG HD ON NS.
GS570J-5D(2)
GN512H-4(2)
L (ZONE 17A)
DETAIL K (ZONE 19B)
FULL SCALE
LDW 280M 10025-1 (REF)
SEE NOTE 1
LDW 280-52075-1 (REF)
SECTION L-L (ZONE 19A)
FULL SCALE
LDW280-10151-13 (REF)
(ZONE 20B) SECTION J-J (TYP-
FULL SCALE

CODE IDENT NO. 26512
LDW280-52010C
SH 4

03/04 NAS 9-1100

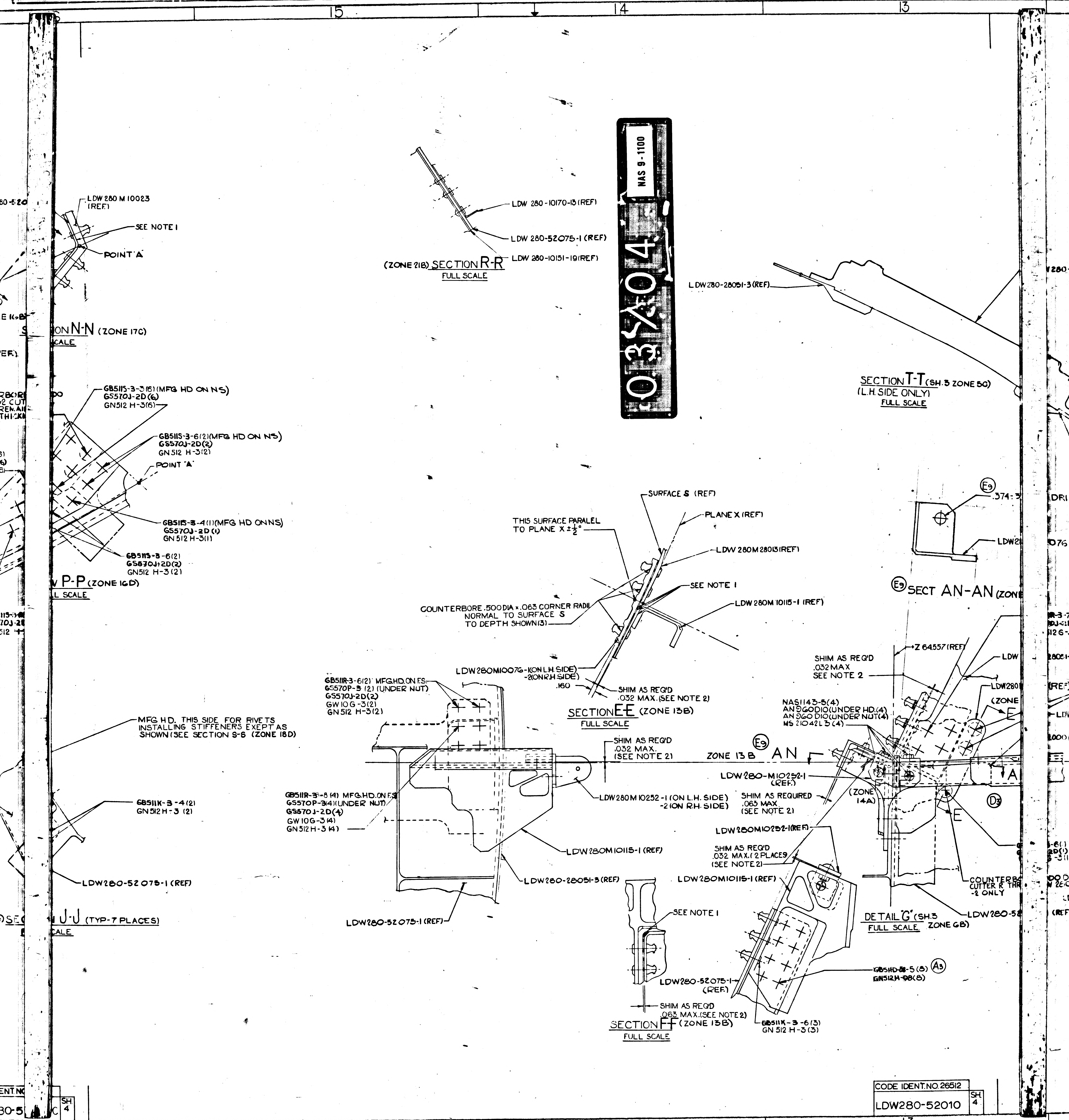
16
15
14
13
LDW 280 M 10023 (REF)
SEE NOTE 1
POINT 'A'
SECTION N-N (ZONE 17C)
GB5115-3-3(6)(MFG HD ON NS)
GS570J-2D(6)
GN512 H-3(6)
GB5115-3-6(2)(MFG HD ON NS)
GS570J-2D(2)
GN512 H-3(2)
POINT 'A'
GB5115-3-4(1)(MFG HD ON NS)
GS570J-2D(1)
GN512 H-3(1)
GB5115-3-6(2)
GS570J-2D(2)
GN512 H-3(2)
P-P (ZONE 16D)
MFG HD. THIS SIDE FOR RIVETS INSTALLING STIFFENERS EXEPT AS SHOWN (SEE SECTION S-S (ZONE 18D)
GB511K-3-4(2)
GN512H-3(2)
LDW280-52075-1(REF)
U-U (TYP-7 PLACES)
LDW 280-10170-13(REF)
LDW 280-52075-1(REF)
LDW 280-10151-19(REF)
(ZONE 21B) SECTION R-R
FULL SCALE
LDW280-28051-3(REF)
SECTION T-T (SH.3 ZONE 5C)
(L.H. SIDE ONLY)
FULL SCALE
SURFACE S (REF)
PLANE X (REF)
THIS SURFACE PARALEL TO PLANE X ±½°
LDW 280M28013(REF)
SEE NOTE 1
COUNTERBORE .500 DIA x .063 CORNER RADII NORMAL TO SURFACE S TO DEPTH SHOWN(3)
LDW 280M10115-1 (REF)
LDW280M10076-1(ON L.H. SIDE)
-2(ON R.H. SIDE)
.160
SHIM AS REQ'D .032 MAX. (SEE NOTE 2)
SECTION E-E (ZONE 13B)
FULL SCALE
E9
.374
SECT AN-AN
GB511R-3-6(2) MFG.HD.ON F.S.
GS570P-3(2)(UNDER NUT)
GS570J-2D(2)
GW10G-3(2)
GN512 H-3(2)
GB511R-3-8(4) MFG.HD.ON F.S.
GS570P-3(4)(UNDER NUT)
GS570J-2D(4)
GW10G-3(4)
GN512H-3(4)
SHIM AS REQ'D .032 MAX. (SEE NOTE 2)
ZONE 13B
AN
LDW280M10252-1(ON L.H. SIDE)
-2(ON R.H. SIDE)
LDW280M10115-1(REF)
LDW280-28051-3(REF)
LDW280-52075-1(REF)
Z 64557(REF)
SHIM AS REQ'D .032 MAX SEE NOTE 2
NAS1143-5(4)
AN960D10(UNDER HD.(4)
AN960D10(UNDER NUT)(4)
MS 21042L3(4)
LDW280-M10252-1 (REF)
SHIM AS REQUIRED .063 MAX (SEE NOTE 2)
(ZONE 14A)
LDW280M10252-1(REF)
SHIM AS REQ'D .032 MAX.(2 PLACES) (SEE NOTE 2)
LDW280M10115-1(REF)
E
D3
COUNTERBORE CUTTER R THRU -2 ONLY
DETAIL 'G' (SH.3 ZONE 6B)
FULL SCALE
LDW280-52
SEE NOTE 1
LDW280-52075-1 (REF)
SHIM AS REQ'D .063 MAX (SEE NOTE 2)
SECTION F-F (ZONE 13B)
FULL SCALE
GB511K-3-6(3)
GN512 H-3(3)
GB5HD-8-5(8)
GN512H-8(8)
A3

CODE IDENT.NO. 26512	SH.
LDW280-52010	4

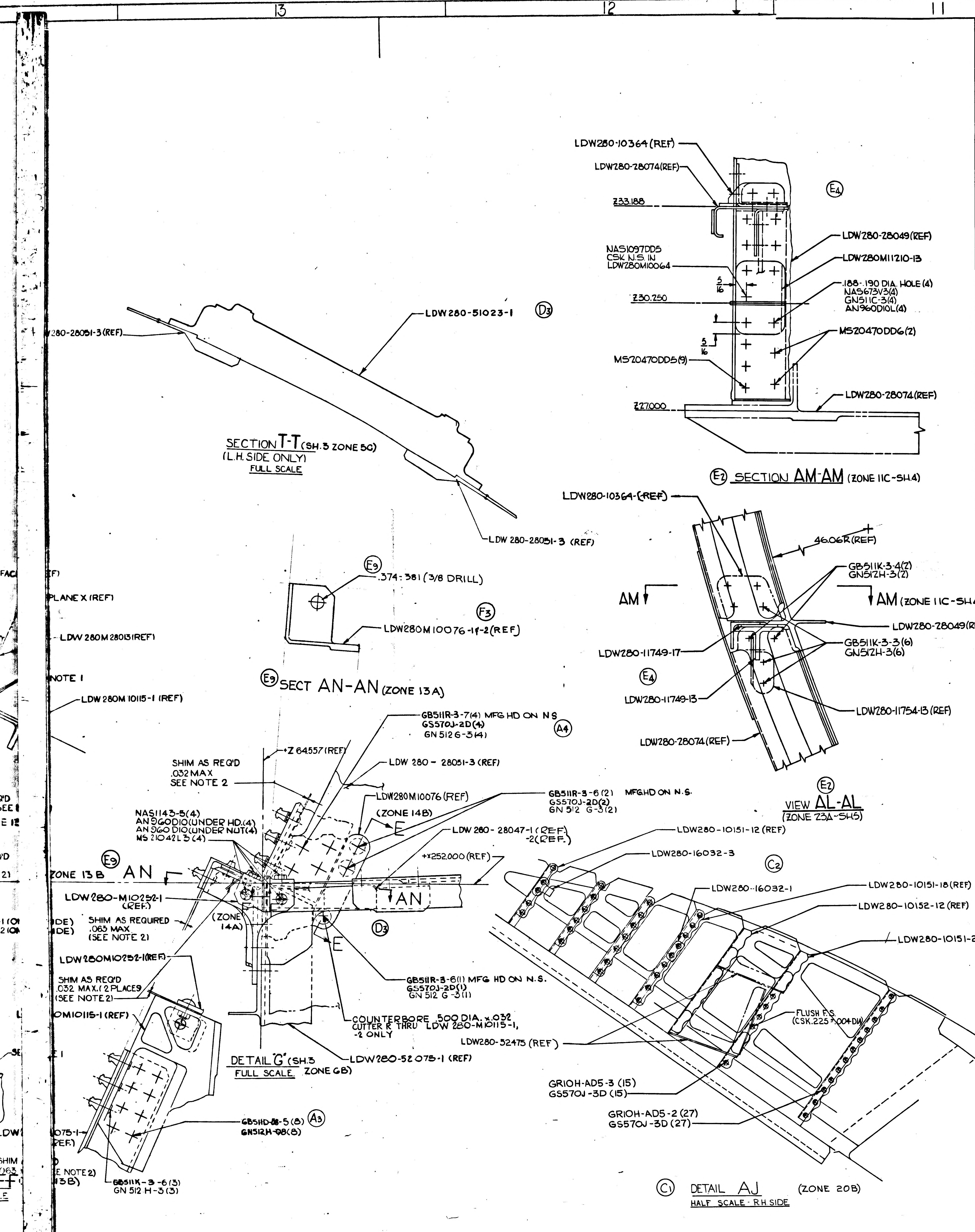

13
12
11
LDW280-10364 (REF)
LDW280-28074 (REF)
Z33.188
NAS1097DD5
CSK N.S. IN
LDW280M10064
5/16
Z30.250
5/16
MS20470DD5(9)
Z27.000
E4
LDW280-28049(REF)
LDW280M11210-13
.188-.190 DIA. HOLE (4)
NAS673V3(4)
GN511C-3(4)
AN960D10L(4)
MS20470DD6(2)
LDW280-28074(REF)
E2 SECTION AM-AM (ZONE 11C-SH.4)
280-28051-3(REF)
LDW280-51023-1
D3
SECTION T-T (SH.3 ZONE 5C)
(L.H. SIDE ONLY)
FULL SCALE
LDW 280-28051-3 (REF)
LDW280-10364-(REF)
46.06R(REF)
GB511K-3-4(2)
GN512H-3(2)
AM
AM (ZONE 11C-SH.4)
LDW280-28049(REF)
GB511K-3-3(6)
GN512H-3(6)
LDW280-11749-17
E4
LDW280-11749-13
LDW280-11754-13(REF)
LDW280-28074(REF)
E2
VIEW AL-AL
(ZONE 23A-SH.5)
E9
.374-.381 (3/8 DRILL)
F3
LDW280M10076-1f-2(REF)
PLANE X (REF)
LDW 280M 28013(REF)
NOTE 1
LDW 280M 10115-1 (REF)
E9 SECT AN-AN (ZONE 13A)
GB511R-3-7(4) MFG HD ON N S
GS570J-2D(4)
GN 512 G-3(4)
A4
+Z 64.557 (REF)
SHIM AS REQ'D
.032 MAX
SEE NOTE 2
LDW 280 - 28051-3 (REF)
LDW280M10076 (REF)
(ZONE 14B)
E
GB511R-3-6 (2) MFG HD ON N.S.
GS570J-2D(2)
GN 512 G-3(2)
NAS1143-5(4)
AN960D10(UNDER HD.(4)
AN960D10(UNDER NUT(4)
MS 21042L3 (4)
LDW 280 - 28047-1 (REF)
-2(REF)
+X252.000 (REF)
E9
ZONE 13B
AN
AN
LDW280-M10252-1
(REF)
SHIM AS REQUIRED
.063 MAX
(SEE NOTE 2)
(ZONE 14A)
D3
E
LDW280M10252-1(REF)
SHIM AS REQ'D
.032 MAX.(2 PLACES)
(SEE NOTE 2)
M10115-1 (REF)
GB511R-3-6(1) MFG HD ON N.S.
GS570J-2D(1)
GN 512 G-3(1)
COUNTERBORE .500 DIA. x .032
CUTTER R THRU LDW 280-M10115-1,
-2 ONLY
DETAIL "G" (SH.3 ZONE 6B)
FULL SCALE
LDW280-52075-1 (REF)
GB511D-08-5 (8)
GN512H-08(8)
A3
GB511K-3-6(3)
GN 512 H-3(3)
075-1
(REF)
E NOTE 2)
13B)
LDW280-10151-12 (REF)
LDW280-16032-3
C2
LDW280-16032-1
LDW280-10151-18(REF)
LDW280-10152-12 (REF)
LDW280-10151-20(REF)
FLUSH F.S.
(CSK.225±.004 DIA)
LDW280-52475 (REF)
GR10H-AD5-3 (15)
GS570J-3D (15)
GR10H-AD5-2 (27)
GS570J-3D (27)
C1 DETAIL AJ (ZONE 20B)
HALF SCALE - R.H. SIDE

MANUFACTURING OPERATIONS
UNLESS OTHERWISE SPECIFIED
NOTES CHECKED √ APPLY TO THIS DWG.

PART NUMBER AND ALL OTHER MARKINGS IN REGION MARKED ⊠ USE BOTH SIDES IF NECESSARY.

FILLET AND INSIDE CORNER RADII TOLERANCES
.016R TO .062R ± .010
.063R TO .250R ± .015
OVER .250R ± .030

DEPTH SHOWN FOR TAPPED HOLES IS FULL THDS. 2-3 IMP THDS. BEYOND PERMISSIBLE.

EXTERNAL THREAD LENGTH SHOWN INCLUDES 2 IMPERFECT THREADS MAX.

DO NOT CADMIUM PLATE & PAINT HOLES OR SURFACES MARKED WITH DOUBLE ASTERISK.

MISMATCH STEP OF ± .005 PERMISSIBLE DUE TO CHANGE OF CUTTERS AT INSIDE INTERSECTING SURFACES.

DIAMETERS MARKED MUST BE CONCENTRIC WITHIN FULL INDICATOR READING

HOLES MUST BE KEPT FREE OF CHROME PLATING SOLUTION.

ALL DIMENSIONS SHOWN TO BE MET AFTER CADMIUM PLATING. THICKNESS OF PLATE .0003 MIN. TO .0005 MAX. MIN. THICKNESS TO BE .0002 ON THREADED AREAS. NO ALLOWANCE FOR PLATING IN HOLES

125 SURFACE ROUGHNESS INCLUDING REAMED HOLES PER MIL-STD-10

200 FOR ALL DRILLED HOLES

REMOVE ALL BURRS. BREAK ALL EDGES .015-.031

INSPECTION INFORMATION MINIMUM PERMISSIBLE AVERAGE EDGE DISTANCE MARKED IS

SYMBOL √ DENOTES SURFACE TO BE MACHINED

UNLESS OTHERWISE SPECIFIED TOLERANCE ON FLANGES IS ± 1/32

LENGTHS OF AN, NAS & MS AL ALY RIVETS SHORTER THAN 1 INCH ARE NOT SPECIFIED.

TOLERANCE ON LOFTED DELINEATIONS IS

DWG SIZE 40 X

PRINTING INFO ONLY
FULL SIZE SHEET AREA (36 X 120) 30 SQ. FT.
1/2 SIZE SHEET AREA (1/4 OF FULL) 7½ SQ. FT.
PRINT TRIM LINE

D
C
B
A

04/04 NAS 9-1100

LDW280-52010 F
LDW280-52010 F

CODE IDENT. NO. 26512
LDW280-52010 SH. 4

	GRUMMAN AIRCRAFT ENGRG CORP., BETHPAGE, L. I., NEW YORK			
LEM	SIZE K	CODE IDENT NO. 26512	LDW280-52010	F (F)
MODEL OR END ITEM	SCALE NOTED		SHEET 4.00	

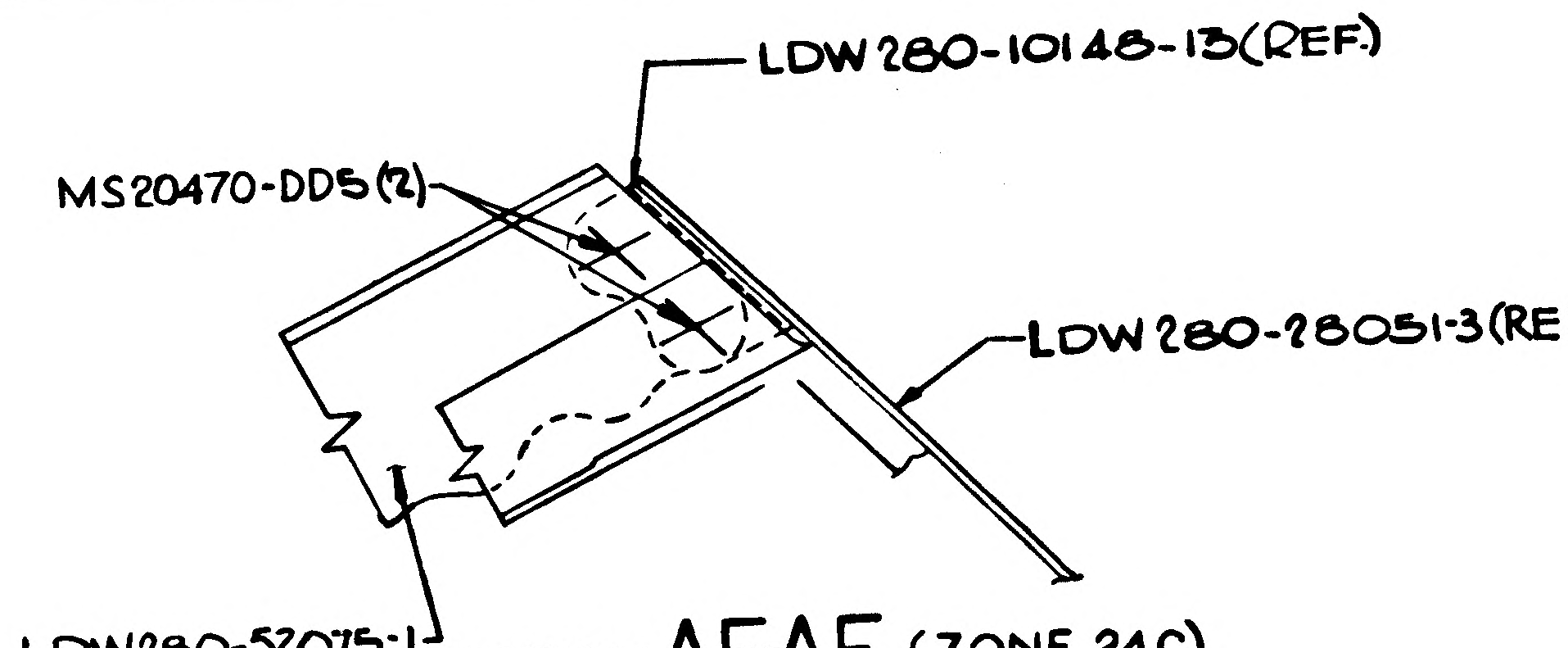
LDW280-10148-13(REF.)
MS20470-DD5(2)
LDW280-28051-3(REF.)
LDW280-52075-1 (REF.)

SECTION AE-AE (ZONE 24C)
FULL SCALE

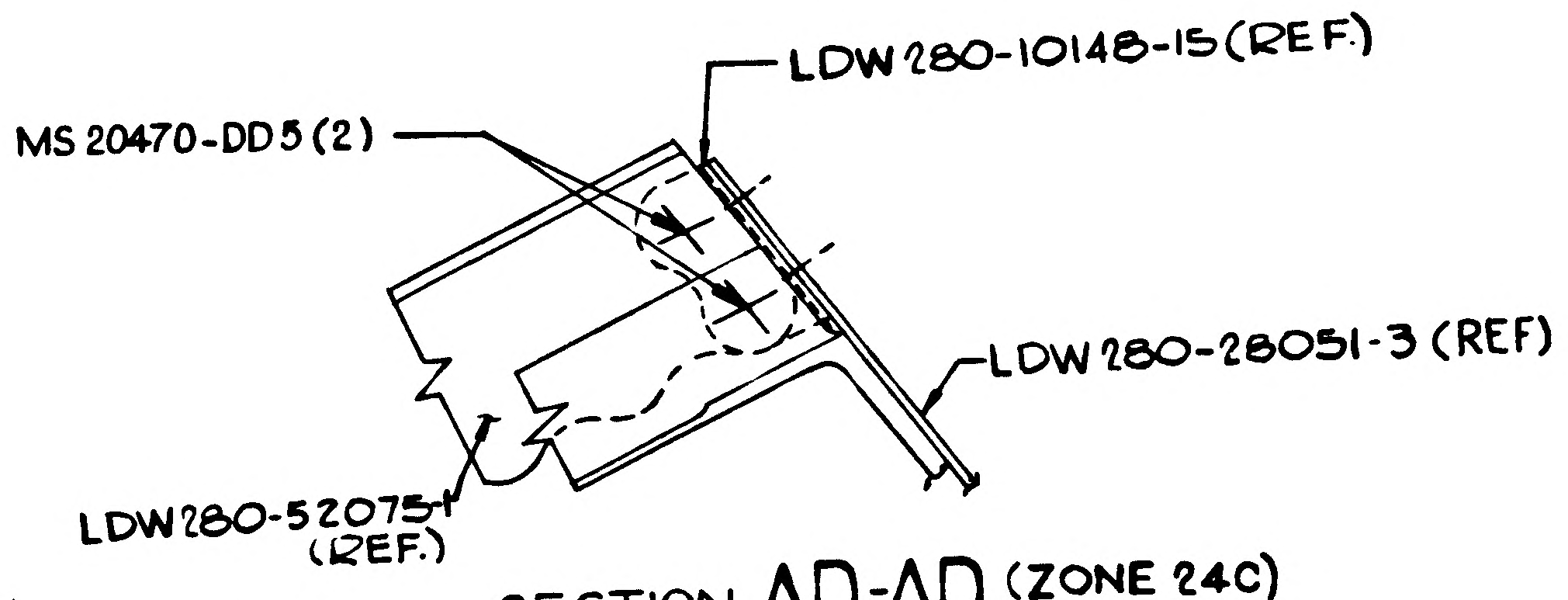
LDW280-10148-15(REF.)
MS20470-DD5(2)
LDW280-28051-3 (REF)
LDW280-52075-1 (REF.)

SECTION AD-AD (ZONE 24C)
FULL SCALE

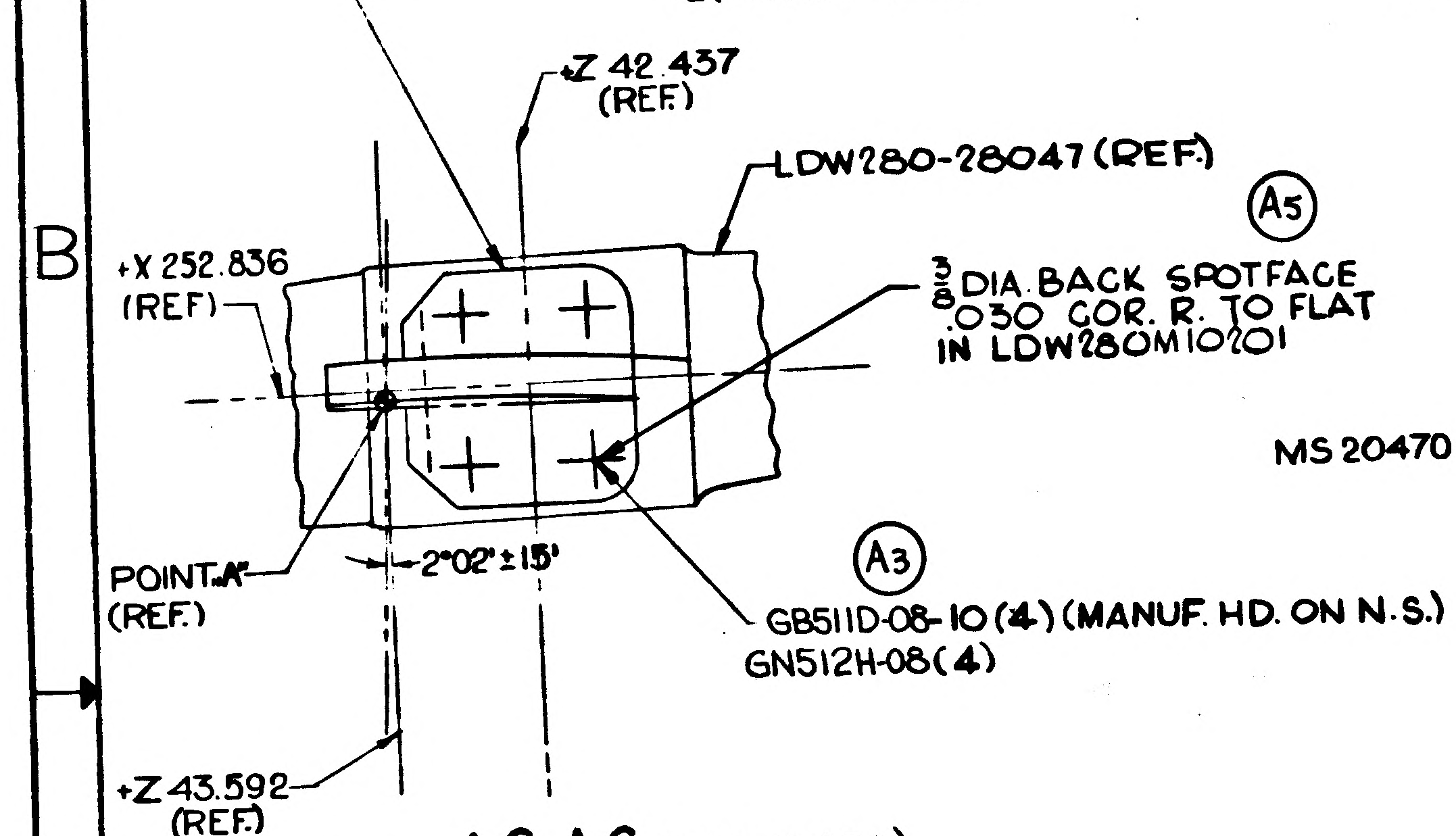
LDW 280 M 10121-1(ON L.H. SIDE) -2(ON R.H. SIDE)
Z 42.437 (REF)
LDW280-28047 (REF)
+X 252.836 (REF)
A5
3/8 DIA BACK SPOTFACE .030 COR. R. TO FLAT IN LDW280M10201
POINT "A" (REF.)
2°02'±15'
A3
GB5110-08-10(4) (MANUF. HD. ON N.S.)
GN512H-08(4)
+Z 43.592 (REF.)

VIEW AG-AG (ZONE 27A)
FULL SCALE

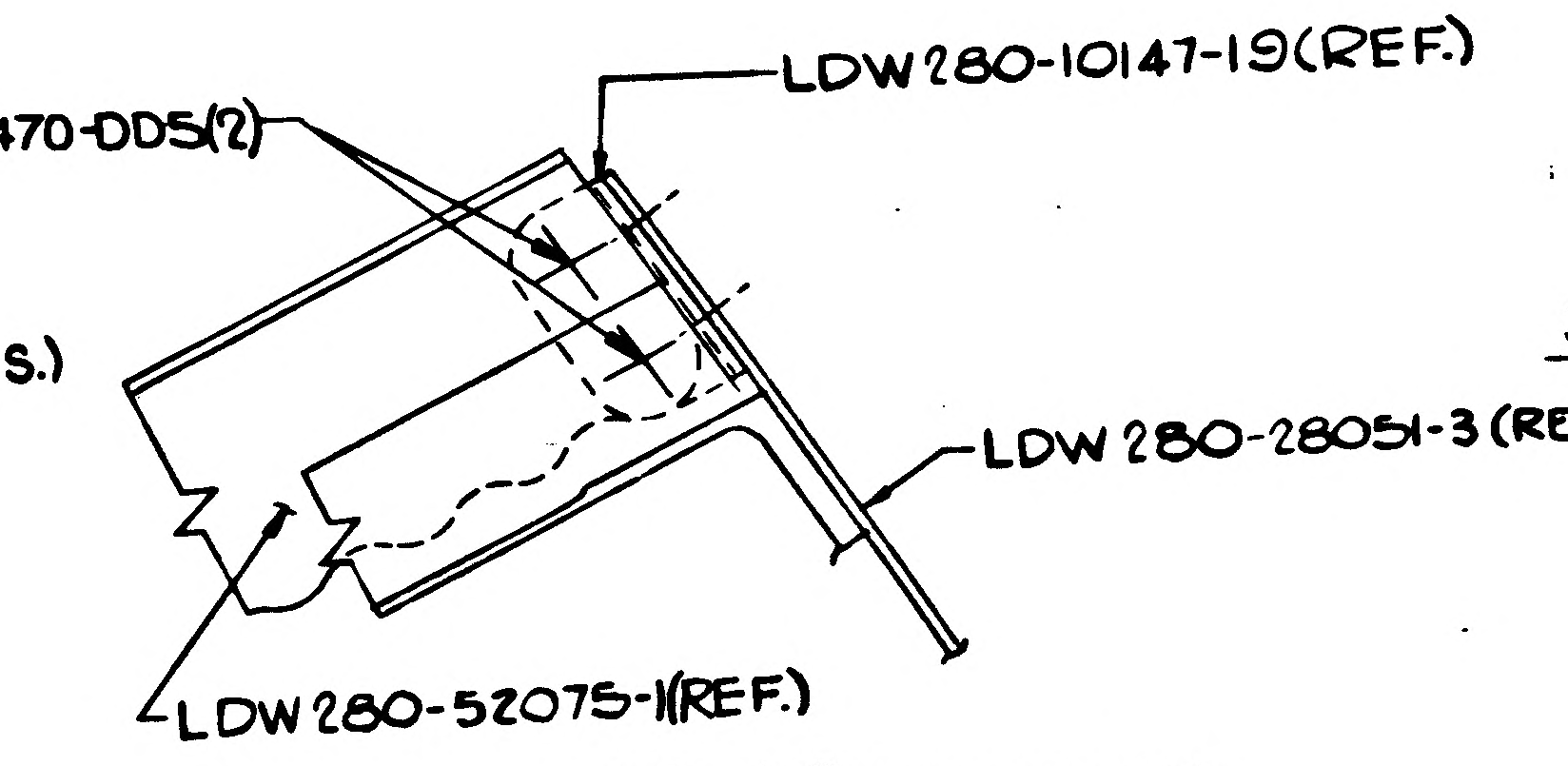
LDW280-10147-19(REF.)
MS20470-DD5(2)
LDW280-28051-3 (REF)
LDW280-52075-1(REF.)

SECTION AC-AC (ZONE 24B)
FULL SCALE

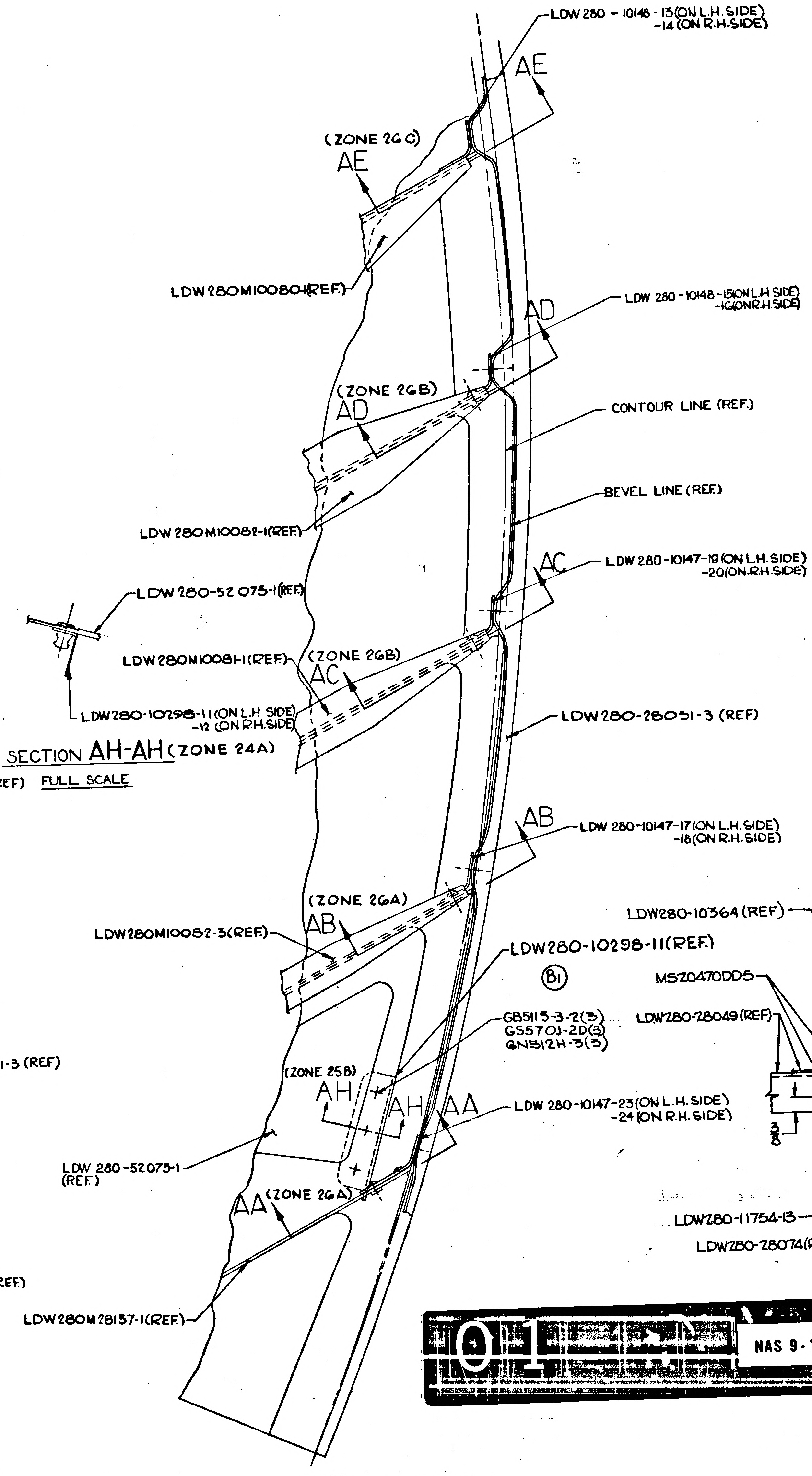
LDW280-52075-1(REF)
LDW280-10298-11(ON L.H SIDE) -12 (ON R.H. SIDE)
LDW 280-10148-13(ON L.H. SIDE) -14(ON R.H. SIDE)
AE
(ZONE 26C)
AE
LDW280M10080-1(REF.)
AD
LDW 280-10148-15(ON L.H SIDE) -16(ON R.H SIDE)
(ZONE 26B)
AD
CONTOUR LINE (REF.)
BEVEL LINE (REF.)
LDW280M10082-1(REF.)
AC
LDW 280-10147-19(ON L.H. SIDE) -20(ON R.H. SIDE)
LDW280M10081-1(REF.)
(ZONE 26B)
AC
LDW280-28051-3 (REF)
AB
LDW 280-10147-17(ON L.H. SIDE) -18(ON R.H. SIDE)
(ZONE 26A)
AB
LDW280M10082-3(REF.)
LDW280-10298-11(REF.)
B1
GB5115-3-2(3)
GS5703-2D(3)
GN512H-3(3)
(ZONE 25B)
AH
AH
AA
LDW 280-10147-23(ON L.H. SIDE) -24(ON R.H. SIDE)
LDW 280-52075-1 (REF.)
AA (ZONE 26A)
LDW280M28137-1(REF.)

SECTION AH-AH (ZONE 24A)
FULL SCALE

01

NAS 9-1100

SECTION Z-Z (SH.3 ZONE 6B)
FULL SCALE

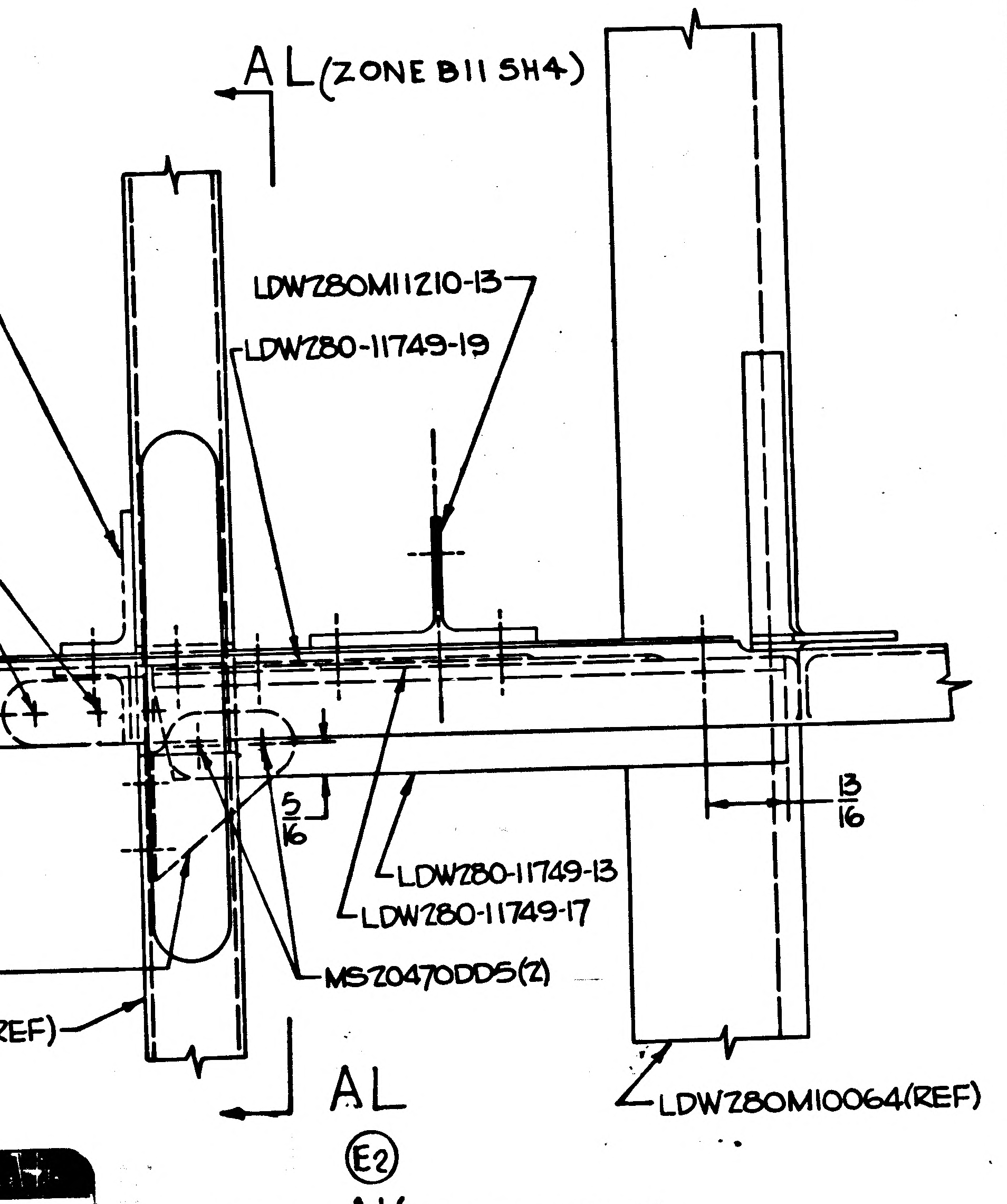
AL (ZONE B11 SH4)
LDW280M11210-13
LDW280-11749-19
LDW280-10364 (REF)
MS20470DD5
LDW280-28049(REF)
3/8
5/16
13/16
LDW280-11749-13
LDW280-11749-17
MS20470DD5(2)
LDW280-11754-13
LDW280-28074(REF)
AL
LDW280M10064(REF)
E2

DETAIL AK (ZONE 5A-SH.3)

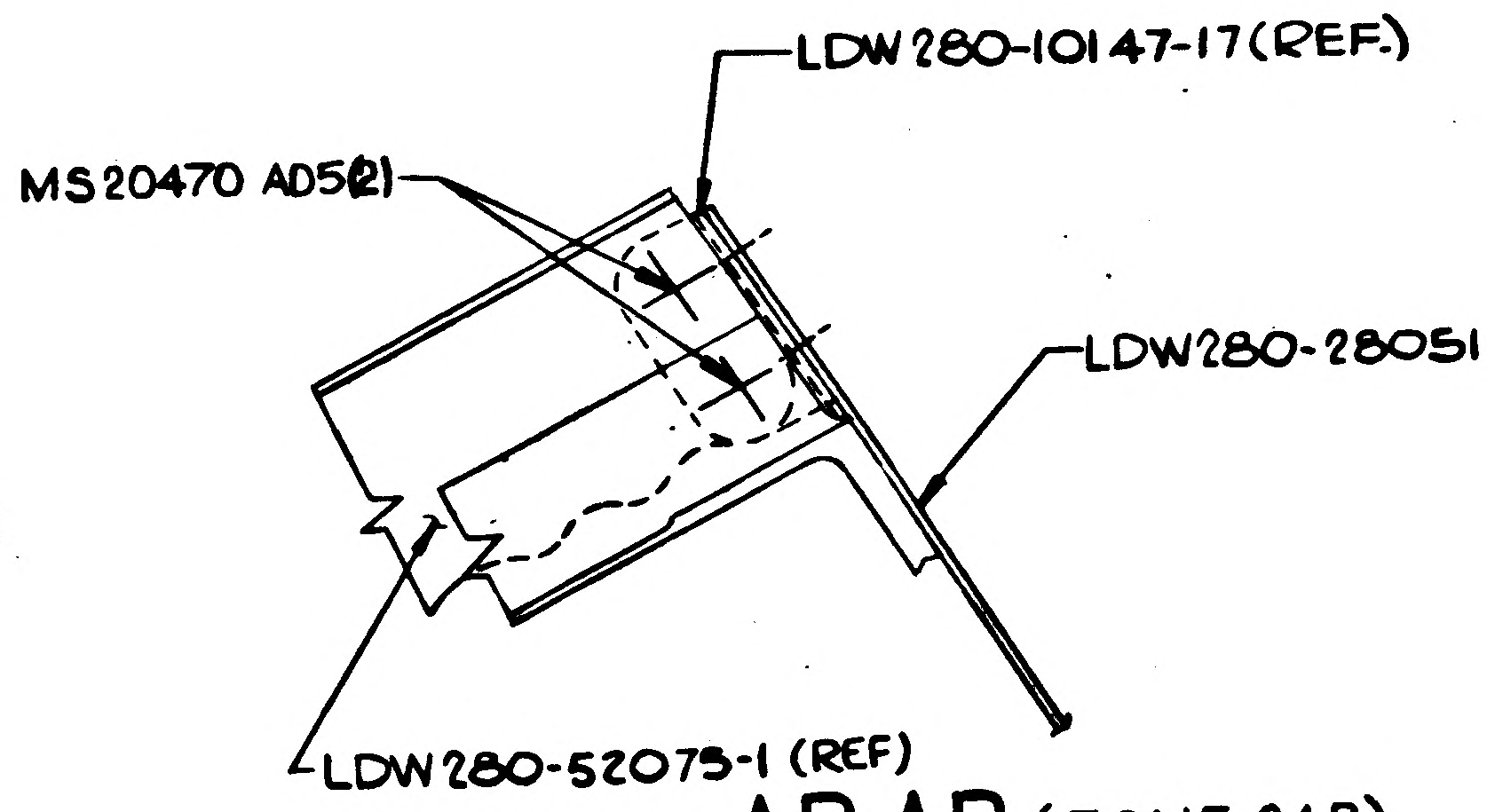
LDW280-10147-17(REF.)
MS20470 AD5(2)
LDW280-28051-3 (REF)
LDW280-52075-1 (REF)

SECTION AB-AB (ZONE 24B)
FULL SCALE

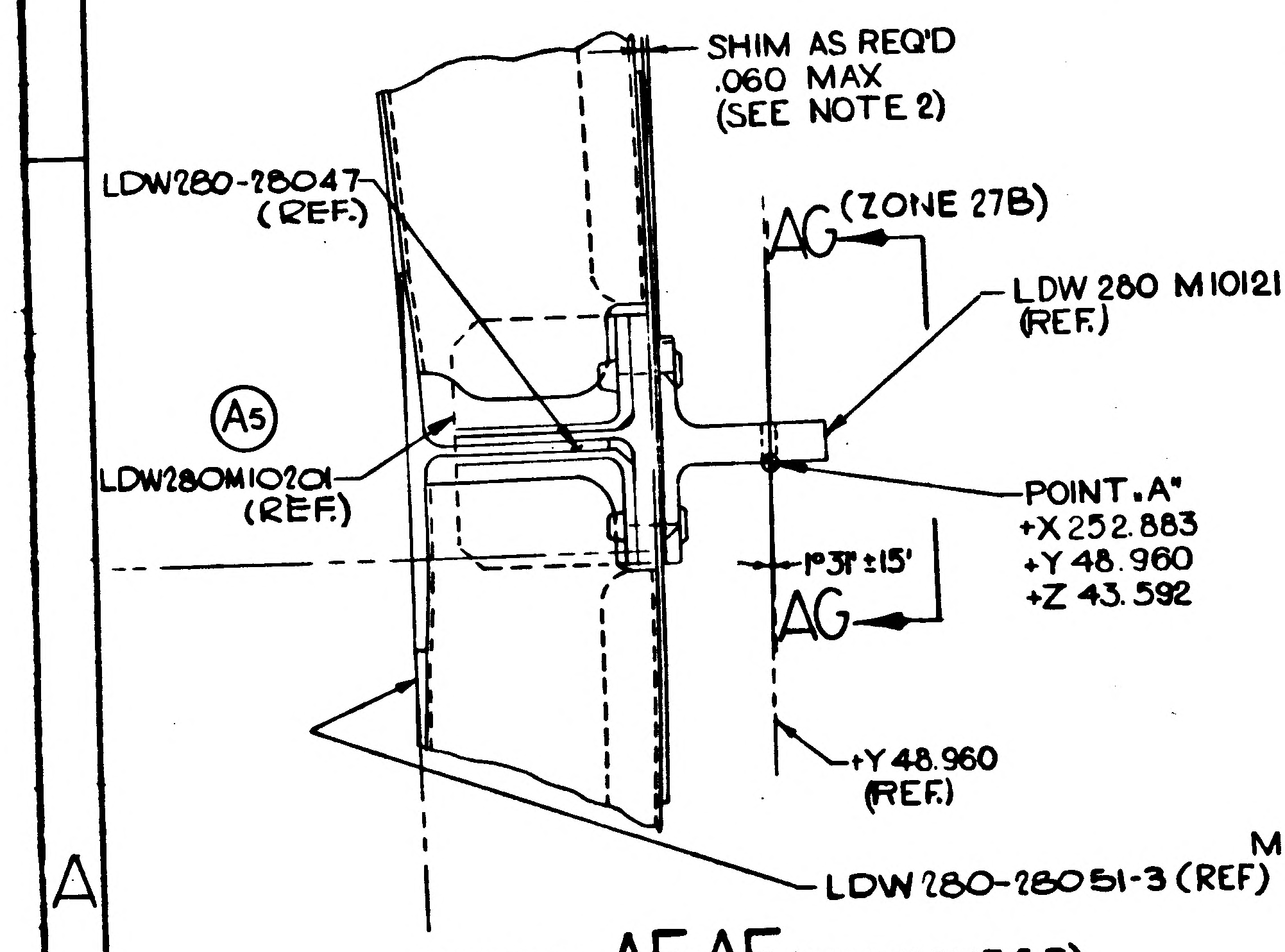
SHIM AS REQ'D .060 MAX (SEE NOTE 2)
LDW280-28047 (REF.)
AG (ZONE 27B)
LDW 280 M10121 (REF.)
A5
LDW280M10201 (REF.)
POINT "A" +X 252.883 +Y 48.960 +Z 43.592
1°31'±15'
AG
+Y 48.960 (REF.)
LDW 280-28051-3 (REF)

SECTION AF-AF (SH.3 ZONE 5B)
FULL SCALE

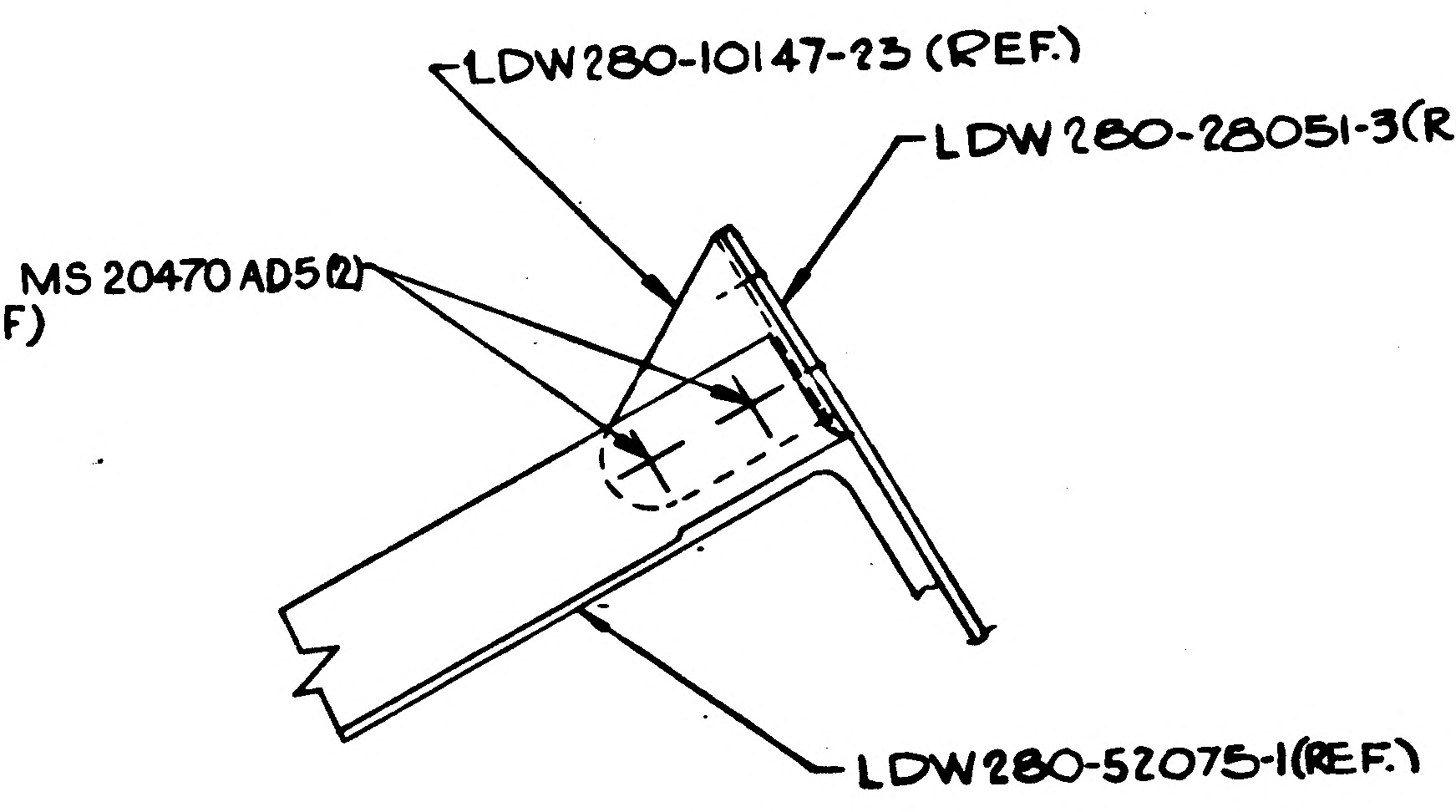
LDW280-10147-23 (REF.)
LDW 280-28051-3(REF.)
MS 20470 AD5(2)
LDW280-52075-1(REF.)

SECTION AA-AA (ZONE 24A)
FULL SCALE

MANUFACTURING OPERATIONS
UNLESS OTHERWISE SPECIFIED
NOTES CHECKED ✓ APPLY TO THIS DWG.

PART NUMBER
AND ALL OTHER MARKINGS
IN REGION MARKED ☒
USE BOTH SIDES IF NECESSARY.

FILLET AND INSIDE CORNER
RADII TOLERANCES
.016R TO .062R ± .010
.063R TO .250R ± .015
OVER .250R ± .030

DEPTH SHOWN FOR TAPPED
HOLES IS FULL THDS. 2-3 IMP THDS.
BEYOND PERMISSIBLE.

EXTERNAL THREAD LENGTH
SHOWN INCLUDES
2 IMPERFECT THREADS MAX.

DO NOT CADMIUM PLATE & PAINT
HOLES OR SURFACES MARKED
WITH DOUBLE ASTERISK.

MISMATCH STEP OF ± .005
PERMISSIBLE DUE TO CHANGE
OF CUTTERS AT INSIDE
INTERSECTING SURFACES.

DIAMETERS MARKED
MUST BE CONCENTRIC WITHIN
FULL INDICATOR
READING

HOLES MUST BE KEPT FREE OF
CHROME PLATING SOLUTION.

ALL DIMENSIONS SHOWN TO BE MET
AFTER CADMIUM PLATING.
THICKNESS OF PLATE .0003 MIN.
TO .0005 MAX. MIN. THICKNESS TO
BE .0002 ON THREADED AREAS.
NO ALLOWANCE FOR PLATING IN
HOLES

125 SURFACE ROUGHNESS
INCLUDING REAMED HOLES
PER MIL-STD-10

200 FOR ALL DRILLED HOLES

REMOVE ALL BURRS.
BREAK ALL EDGES .015-.031

INSPECTION INFORMATION
MINIMUM PERMISSIBLE
AVERAGE EDGE DISTANCE
MARKED IS

SYMBOL ƒ DENOTES SURFACE
TO BE MACHINED

UNLESS OTHERWISE SPECIFIED
TOLERANCE ON FLANGES IS ± 1/32

LENGTHS OF AN, NAS & MS AL ALY
RIVETS SHORTER THAN 1 INCH ARE
NOT SPECIFIED.

TOLERANCE ON LOFTED
DELINEATIONS IS

DWG SIZE 34 X 46

PRINTING INFO ONLY
FULL SIZE SHEET AREA (36 X 48)= 12 SQ. FT.
1/2 SIZE SHEET AREA (1/4 OF FULL)= 3 SQ. FT.

PRINT TRIM LINE

LDW280-52010 F

LDW280-52010 F

CODE IDENT. NO. 26512
LDW280-52010
SH 5

GRUMMAN AIRCRAFT ENGRG CORP., BETHPAGE, L. I., NEW YORK

SIZE	CODE IDENT NO.		
J	26512	LDW 280-52010	F

LEM
MODEL OR END ITEM
SCALE NOTED
SHEET 5.00

2/2

ENG 20.1 REV 3-65 *

GRUMMAN AIRCRAFT ENGINEERING CORP.
CODE IDENT NO. 26512
ENGINEERING ORDER

DWG. NO. LEO 280
EO NO. 277
CONTROL INFO NO. LDW280A-0451

IN THE F/D & B/M OF THE FOLLOWING DRAWINGS ADD (1) EACH OF LDW280-28315-1 & -2 DOCKING LIGHT SUPPORT INSTL.

	NO.	TITLE	EO. No.	Eff.
✓	LDW280-28010	CABIN ASSY-ASCENT STAGE INSTL.	D1	LTA-8(18)
✓	51010	↓	D2	LM-1(31)
✓	52010	↓	D1	LM-2(32)

* INSTALLATION MADE PER E.O.

3

DETAIL SPEC REQ ☐ CL II ENGRG CHG ☐ CL I ENGRG CHG ☐

REASON FOR EO: TO INSTALL DOCK LIGHT SUPPORT INSTALLATION.

DESCRIPTION OF EO: ADD LDW280-28315-1 & -2 TO DRAWINGS LDW280-28010

② GAEC C EO RELEASE: FR 9/26/66

MODEL	PROCURING ACTIVITY NO.	GAEC UNIT NO.	SUB CONTR UNIT NO.
LM		NOTED	
LM			
LM			

DRAWING CHANGE REQD		DISPOSITION OF PARTS	
✓		#	
REVISE DWG	RECORD EO	REWORK	SCRAP

APPROVED BY								
DATE ✓	9-15-66	104		9-15-66	9-19		9-26-66	9/22/66
	V.D.I.	~~SUPPORT~~	RELIAB. GROUP	GROUP LEADER	STRESS GROUP	LIAISON ENGRG	PROJ ENGRG	~~CUST~~

PRIORITY	DRAWING TITLE	DRAWING NO.	EO NO.
C	NOTED	LEO 280	277

ISSUED BY P. ABRAMS X1441 9/15/66 SECTION VD1 GROUP NO. 335 PL 35

01

NAS 9-1100

ENG 32.1 REV 3-66

GRUMMAN AIRCRAFT ENGINEERING CORP.
CODE IDENT NO. 26512

ENGINEERING ORDER

DWG. NO. LDW280-52010 EO NO. D2
CONTROL INFO NO. LDV 280 A 2263

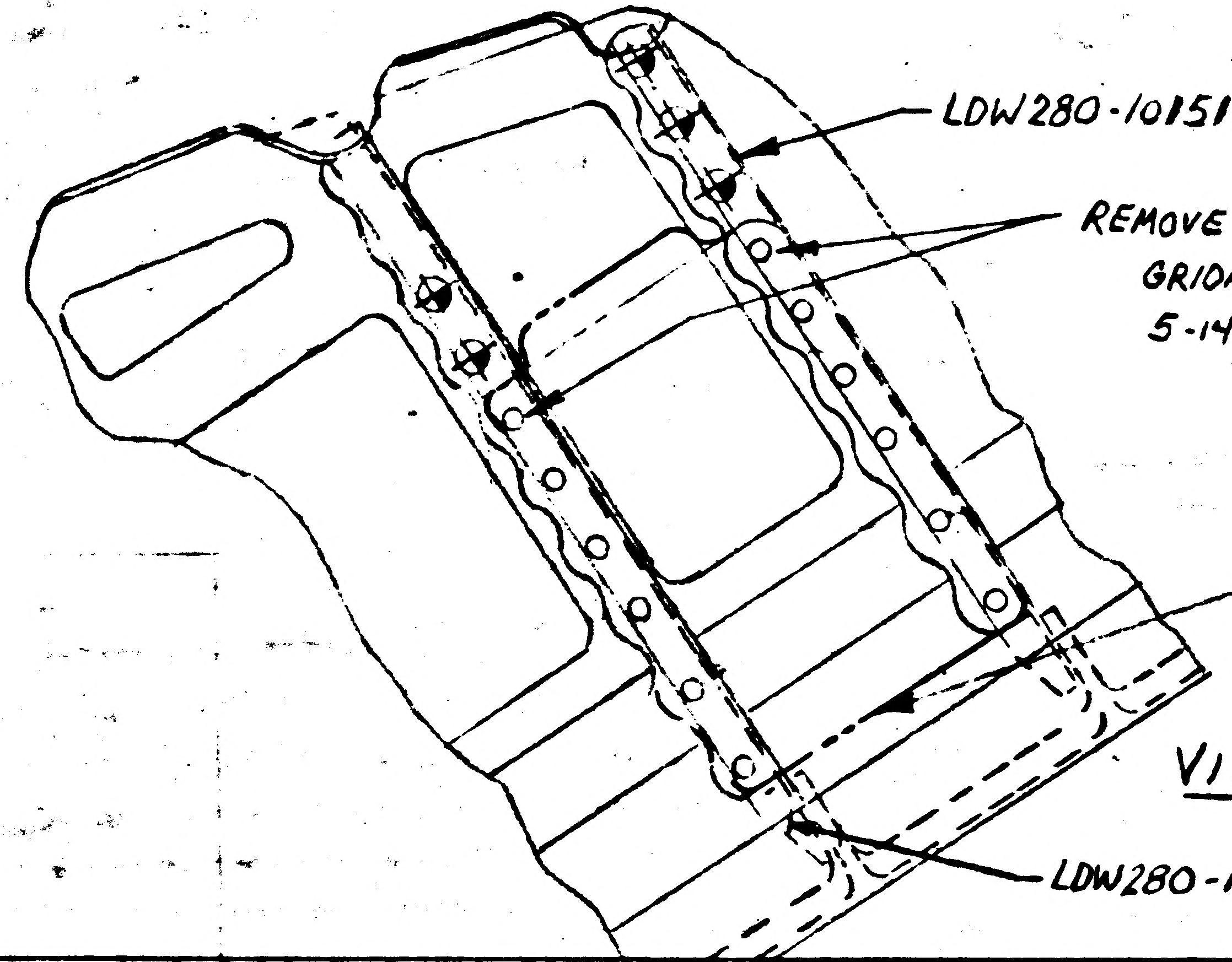

LDW280-10151-17 (REF.)
REMOVE FROM CALLOUT
GR104-AD5-2 (12)
5-147 (12) (ON L.H. SIDE ONLY)
LDW340-52375 (REF.)
(ADD)
LDW280-10152-11 (REF.)

VIEW B-B (20B) (REF.)

DETAIL SPEC RQR		CL II ENGRG CHG		CL I ENGRG CHG		3

REASON FOR EO: ADDITION OF SUPPORT INSTL FOR OPT. ALIGN. SIGHT FASTENERS WHICH ARE REMOVED, CALLED OUT ON LDW340-52375

DESCRIPTION OF EO: ON-1 REMOVED: 12 FASTENERS AS SHOWN (L.H. ONLY) ADD: LDW340-52375 (REF)

Ⓡ GAEC C EO RELEASE: LE 10/28

MODEL	EFFECTIVITY PROCURING ACTIVITY NO.	GAEC UNIT NO.	SUB CONTR UNIT NO.
LM	LM	2(32)	

DRAWING CHANGE REQD		DISPOSITION OF PARTS		APPROVED BY								
✓		✓		DATE	RVP ES 10-20-66				W 11-25		RMC WR 10-26-66	JRL 10/27/66
REVISE DWG	RECORD EO	REWORK	SCRAP		V.D.I	SUPPORT	RELIAB. GROUP	GROUP LEADER	STRESS GROUP	LIAISON ENGRG	PROJ ENGRG	~~GOVT~~

PRIORITY	DRAWING TITLE	DRAWING NO.	EO NO.
C	CABIN ASSY ASCENT STAGE	LDW280-52010	D2

ISSUED BY P. ABRAMS X1441 10/18/66 SECTION VDI-CABIN GROUP NO. 335 PL 35

01

NAS 9-1100

ENG 32.1 REV 3-65

GRUMMAN AIRCRAFT ENGINEERING CORP.
CODE IDENT NO. 26512
ENGINEERING ORDER

DWG. NO. LDW280-52010
EO NO. E1
CONTROL INFO NO. LDW280A-3402

ON-3 IN F/D & IN B/M ADD LDW280-51849-1 (1 REQD)

DETAIL SPEC REQ	☐	CL II ENGRG CHG	☐	CL I ENGRG CHG	☐

3

REASON FOR EO: TO INCORPORATE ADDITIONAL PARTS.

DESCRIPTION OF EO: ON-3 ADDED LDW280-51849-1 (1 REQD)

Ⓡ GAEC C EO RELEASE: FR 11/23/6

MODEL	PROCURING ACTIVITY NO.	GAEC UNIT NO.	SUB CONTR UNIT NO.
LM		LM-2 (32)	

DRAWING CHANGE REQD: REVISE DWG ✓ RECORD EO

DISPOSITION OF PARTS: REWORK ✓ SCRAP

APPROVED BY				—		RMC	
DATE	11/15/66			—	11-16	11-17-66	11/17/66
5	VD1	SUPPORT	RELIAB. GROUP	GROUP LEADER	STRESS GROUP	LIAISON ENGRG	PROJ ENGRG

PRIORITY: C

DRAWING TITLE: CABIN ASSY - ASCENT STAGE

DRAWING NO.: LDW280-52010

EO NO.: E1

ISSUED BY W. MANOS X-1441 11/15/66 SECTION VEH DES. INT. GROUP NO. 335 PL 35

01

NAS 9-1100

ENG 32.1 REV 3-65

GRUMMAN AIRCRAFT ENGINEERING CORP.
CODE IDENT NO. 26512
ENGINEERING ORDER EMF-A

DWG. NO. LEO 280
EO NO. 435
CONTROL INFO NO. LM-3-4569

DRAWING NO.	E.O CHG.	DESCRIPTION OF CORRECTION	EFFECT.
LDW280-11698 ✓	A2	ON INCORPORATION OF E.O A1 FOR -13 1/16 B.R. WAS 1/8 B.R. (1/8 B.R. CALLED IN ERROR, NO B.R. PREVIOUSLY CALLED OUT)	LM-3 (33) THRU LM-15 (45)
LDW280-28896	A5	ON INCORP. OF E.O. A3 IN ITEM 7 LDW 280 P 16871 -11 WAS LDW 280P 14391 -11 (TYPOGRAPHICAL ERROR)	LTA-8 (18) LM-1 (31) LM-2 (32)
LDW 280-10366	D1	FOR -5-7 & -37, EFF. LM-5, LM-6 N/A LDW 280-54020 WAS LDW280-55020 & LDW280-56020 RESP.. ADDED LM-7 THRU LM-15 TO N/A LDW 280-54020 FOR -5-7 & -37	LM-5 (34) THRU LM-15 (45)
LDW280-11143	B6	ON INCORP. OF E.O. B5 -33 WAS -15 (REF. LEO 280-427)	LM-3 (33) THRU LM-15 (45)
LDW280-16065	B1	ON INCORP. OF E.O. A1 FIN #88 WAS FIN #76	LM-4 (34) THRU LM-15 (45)
LDW280-52010	E3	ON INCORP. OF E.O. E2 "ON -3 ASSY" WAS "ON -1 ASSY"	LM-2 (32)

DETAIL SPEC REQ ☐ CL II ENGRG CHG ☐ CL I ENGRG CHG ☐ 3

REASON FOR EO: PROVIDE MULTIFLE DRAWING CORRECTIONS

DESCRIPTION OF EO: NOTED

GAEC C EO RELEASE ✓

MODEL	PROCURING ACTIVITY NO.	GAEC UNIT NO.	SUB CONTR UNIT NO.
LM		NOTED	

DRAWING CHANGE REQD: REVISE DWG ✓ RECORD EO

DISPOSITION OF PARTS: REWORK / SCRAP — NOT REQD

		SUPPORT	RELIAB. GROUP	GROUP LEADER	STRESS GROUP	LIAISON ENGRG	PROJ ENGRG	
APPROVED BY				—	BM			
DATE	2/9/67			—	1-9-67	1-9-67	1-11-67	1/9/67
6	VDI							

PRIORITY: C

DRAWING TITLE: SEE DRAWING

DRAWING NO. LEO 280

EO NO. 435

ISSUED BY LIAISON / VIC BOLLO x2151 SECTION VDI GROUP NO. 335 PL 35

01

NAS 9-1100

ENG 32.1 REV 3-65

GRUMMAN AIRCRAFT ENGINEERING CORP.
CODE IDENT NO. 26512
ENGINEERING ORDER

DWG. NO. LDW280-52010
EO NO. E4
CONTROL INFO NO. LM-5-12172

ON -1 ASSY
REMOVE LDW280-11749-15 SHIM

RELEASED BY LIAISON

DETAIL SPEC REQ	☐	CL II ENGRG CHG	☐	CL I ENGRG CHG	☐	5

REASON FOR EO SHIM CAUSES INTERFERENCE BETWEEN CLIP & STRUCTURE	DESCRIPTION OF EO ON -1 ASSY REMOVED LDW 280-11749-15

GAEC EO RELEASE: LE

MODEL	PROCURING ACTIVITY NO.	GAEC UNIT NO.	SUB CONTR UNIT NO.
LM		LM-2(32)	

DRAWING CHANGE REQD: REVISE DWG	DRAWING CHANGE REQD: RECORD EO	DISPOSITION OF PARTS: REWORK	DISPOSITION OF PARTS: SCRAP
✓		✓	

	1	VD1	SUPPORT	RELIAB. GROUP	GROUP LEADER	STRESS GROUP	LIAISON ENGRG	PROJ ENGRG	~~GOVT~~
APPROVED BY					—		EWB		
DATE		[illegible]			—	1/14	1/14/67	1-19-67	1-16-67

PRIORITY	DRAWING TITLE	DRAWING NO.	EO NO.
C	CABIN ASSY ASCENT STAGE	LDW280-52010	E4

ISSUED BY LIAISON EV BERGEMAN X-2485 SECTION VD1 GROUP NO. 280 PL 35

01 NAS 9-1100

B

ENG 32.1 REV 3-65

GRUMMAN AIRCRAFT ENGINEERING CORP.
CODE IDENT NO. 26512
ENGINEERING ORDER

*

DWG. NO. LDW 280-52010
EO NO. E5
CONTROL INFO NO. LDW 280 A- 6715

ON -1:

LDW 280-23217 -3 AND -4 WAS -1 AND -2

DETAIL SPEC REQ		CL II ENGRG CHG	✓	CL I ENGRG CHG	LCD - 1229

REASON FOR EO: SUPPORT REQ'D FOR RCS CLUSTER INNER INSUL. PER LCD# 1229

DESCRIPTION OF EO: ON -1: LDW 280-23217 -3 & -4 WAS -1 & -2

GAEC EO RELEASE: C 3 IK 5/8/

MODEL	EFFECTIVITY		
	~~[illegible]~~	GAEC UNIT NO.	~~SUB-CONTR UNIT NO.~~
LM	LM-2 (52)		

DRAWING CHANGE REQ'D		DISPOSITION OF PARTS	
✓		[redacted] ✓	
REVISE DWG	RECORD EO	REWORK	SCRAP

APPROVED BY	Jap	RAH		FDR	DAB		Dam	
DATE	5/3/67	5/3/67		5/3/67	5/4/67		5/4/67	5-5-67
65	VDI	THERMO ~~SUPPORT~~	RELIAB. GROUP	GROUP LEADER	STRESS GROUP	LIAISON ENGRG	PROJ ENGRG	~~GOVT~~

PRIORITY	DRAWING TITLE	DRAWING NO.	EO NO.
C	CABIN ASSEMBLY - ASCENT STAGE	LDW 280-52010	E5

ISSUED BY Geo. W. Rocklein x7033 4/28/67 SECTION Veh. Des. Int. GROUP NO. 335 PL. 25

01 NAS 9-1100

B

ENG 32.1 REV 3-65

GRUMMAN AIRCRAFT ENGINEERING CORP.
CODE IDENT NO. 26512
ENGINEERING ORDER EMF-A *

DWG. NO. LEO 280
EO NO. 595
CONTROL INFO NO. LM-3-5078

DRAWING NO.	CHG.	DESCRIPTION OF CORRECTION	EFFECT.
✓ LDW280-10488	D1	ON INCORP. OF E.O. C6 -11 & -21 WAS -11, -21, -13, -15 & -17	LM-3 (33) THRU LM-15 (45)
✓ LDW280-54424	D4	ON INCORP. OF CHG D3 E.O. D2 WAS E.O. B3 (IN ERROR)	LM-4 (34) THRU LM-15 (45)
✓ LDW280-11522	B1	FOR -11, -13, -15 ADD LM-3 SAME QUANT. & N/A	LM-3 (33)
✓ LDW280-28176	D2	IN FIELD & B/M REMOVE LDW280-10611-13-14	LTA-8 (18) LM-1 (31) LM-2 (32) LM-3 (33)
✓ LDW280-28875	B8	ON INCORP. OF E.O. B4 -1 WAS -3	LM-1 (31) LM-2 (32)
✓ LDW280-52010	E6	ON INCORP. OF E.O. E5 -3 WAS -1	LM-2 (32)

DETAIL SPEC REQ ☐ CL II ENGRG CHG ☑ CL I ENGRG CHG ☐

3

REASON FOR EO: PROVIDE MULTIPLE DRAWING CORRECTIONS.

DESCRIPTION OF EO: NOTED

GAEC EO RELEASE: JK

MODEL	PROCURING ACTIVITY NO.	GAEC UNIT NO.	SUB CONTR UNIT NO.
LM		NOTED	

DRAWING CHANGE REQD: ✓ REVISE DWG ☐ RECORD EO

DISPOSITION OF PARTS: NOT REQD REWORK SCRAP

	APPROVED BY			GROUP LEADER	STRESS GROUP	LIAISON ENGRG	PROJ ENGRG	~~GOVT~~
				~	—		DAM (EW)	
DATE	7/6/67			~	—	5-15-67	5-16-67	5-15-67
6	VDI	SUPPORT	RELIAB. GROUP					

PRIORITY: C
DRAWING TITLE: SEE DRAWING
DRAWING NO. LEO 280
EO NO. 595

ISSUED BY LIAISON / VIC BOLLO X2151 SECTION VDI GROUP NO. 335 PL 25

01 NAS 9-1100

ENG 32.1 REV 3-65

GRUMMAN AIRCRAFT ENGINEERING CORP.
CODE IDENT NO. 26512 *
ENGINEERING ORDER

DWG NO. LDW280-52010
EO NO. E7
CONTROL INFO NO. LDW280A6099

IN B/M & F/D.

ADD LDW280-52899-1 SUPPORT INSTL.

DETAIL SPEC REQ	☐	CL II ENGRG CHG	☐	CL I ENGRG CHG	☑	LCD #1249 CCA455 3

REASON FOR EO: ADDITION OF EVA HANDRAIL & SUPPORT STRUCTURE

DESCRIPTION OF EO: ON-1 IN B/M & F/D, ADDED LDW280-52899-1

(R) GAEC EO RELEASE: JK 5/23/67 C

MODEL	PROCURING ACTIVITY NO.	GAEC UNIT NO.	SUB CONTR UNIT NO.
LM		LM-2 (32)	

DRAWING CHANGE REQD		DISPOSITION OF PARTS	
REVISE DWG ✓	RECORD EO	REWORK ✓	SCRAP

APPROVED BY				F.N.				
DATE	5/19/67			5/18/67	5/19		5/23/67	5/23/67
2	VOI	SUPPORT	RELIAB. GROUP	GROUP LEADER	STRESS GROUP	LIAISON ENGRG	PROJ ENGRG	~~GOVT~~

PRIORITY	DRAWING TITLE	DRAWING NO.	EO NO.
C	CABIN ASSY. ASCENT STAGE	LDW280-52010	E7

ISSUED BY H.KING x7033 5/17/67 SECTION VEH. DES. INT. GROUP NO. 335 PL 25

01 NAS 9-1100

ENG 32.1 REV 3-65

GRUMMAN AIRCRAFT ENGINEERING CORP. *
CODE IDENT NO. 26512
ENGINEERING ORDER

DWG. NO. LDW280-52010
EO NO. E8
CONTROL INFO NO. LM-5-15341

THIS IS A REVISION OF EO E2, E4, E5 & E7

CHANGE CALLOUT ON-1 S/B ON-3

RELEASED BY LIAISON

DETAIL SPEC REQ	☐	CL II ENGRG CHG	☐	CL I ENGRG CHG	✓	LCD #1249 CCA455

REASON FOR EO: -3 REPLACED -1 ON PRIOR EO (REF EO B8) RTE05131-246

DESCRIPTION OF EO: REF EO E2, E4, E5 & E7 ON-3 WAS ON-1

GAEC EO RELEASE: C JL

EFFECTIVITY

MODEL	PROCURING ACTIVITY NO.	GAEC UNIT NO.	SUB CONTR UNIT NO.
LM		LM-2	

DRAWING CHANGE REQD		DISPOSITION OF PARTS	
REVISE DWG	RECORD EO	REWORK	SCRAP
✓		✓	

		SUPPORT	RELIAB. GROUP	GROUP LEADER	STRESS GROUP	LIAISON ENGRG	PROJ ENGRG	~~GOVT~~
APPROVED BY	JaP			—	JF	CH		
DATE	7/5/67			—	6-15-67	6/12/67	7/5/67	6/13/67
2	UDI							

PRIORITY: C
DRAWING TITLE: CABIN ASSY ASCENT STAGE
DRAWING NO.: LDW280-52010
EO NO.: E8

ISSUED BY LIAISON C. Hedges/ X86226 SECTION YD1 GROUP NO. 335 PL 25

01 NAS 9-1100

'B

ENG 32.1 REV 3-65

GRUMMAN AIRCRAFT ENGINEERING CORP.
CODE IDENT NO. 26512
ENGINEERING ORDER

DWG. NO. LDW280-52010		EO NO. E9
* CONTROL INFO NO LDW280A-7852		

ON-1 INSTL

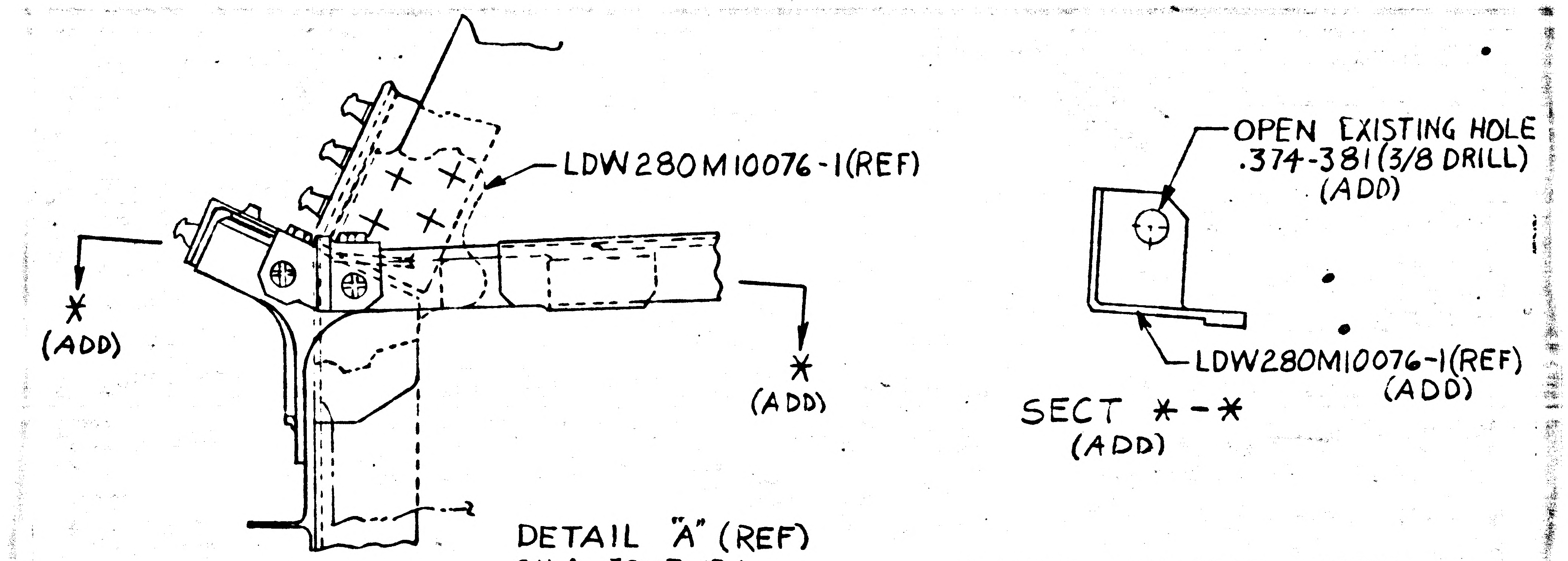
LDW280M10076-1(REF)
*
(ADD)
*
(ADD)
OPEN EXISTING HOLE
.374-.381 (3/8 DRILL)
(ADD)
LDW280M10076-1(REF)
(ADD)
SECT *-*
(ADD)

DETAIL "A" (REF)
SH 4 ZONE 13A

* NEXT AVAILABLE LETTER

DETAIL SPEC REQ	☐	CL II ENGRG CHG	☐	CL I ENGRG CHG	☒ LCD 1608A

3

REASON FOR EO	DESCRIPTION OF EO	GAEC EO RELEASE
REDUNDANT GROUNDING OF NEGATIVE BUS	ON-1 INSTL ADDED SECT *-* & CALLOUT "OPEN EXISTING HOLE .374-.381 (3/8 DRILL)	C VK 7/24/67

MODEL	EFFECTIVITY		
	PROCURING ACTIVITY NO.	GAEC UNIT NO.	SUB CONTR UNIT NO
LM		LM-2 (32)	

DRAWING CHANGE REQD		DISPOSITION OF PARTS	
✓		✓	
REVISE DWG	RECORD EO	REWORK	SCRAP

APPROVED BY				JW	EP				
DATE	7/22			7/22/67	7/22		7/24	7-24-67	
	VD1	SUPPORT	RELIAB GROUP	GROUP LEADER	STRESS GROUP	LIAISON ENGRG	PROJ ENGRG	GOVT	

PRIORITY	DRAWING TITLE	DRAWING NO.	EO NO.
C	CABIN ASSY - ASCENT STAGE	LDW280-52010	E9

7-29-67
ISSUED BY HUGH RYAN X 1392 7-21-67 SECTION VD1 (EQUIP LINES) GROUP NO. 332 PL. 25

01

NAS 9-1100

B

ENG 32.2 REV 3-65

GRUMMAN AIRCRAFT ENGINEERING CORP.
CODE IDENT NO. 26512 *
ENGINEERING ORDER

DWG. NO. LDW280-52010
EO NO. E10
CONTROL INFO NO. LDW280A8912

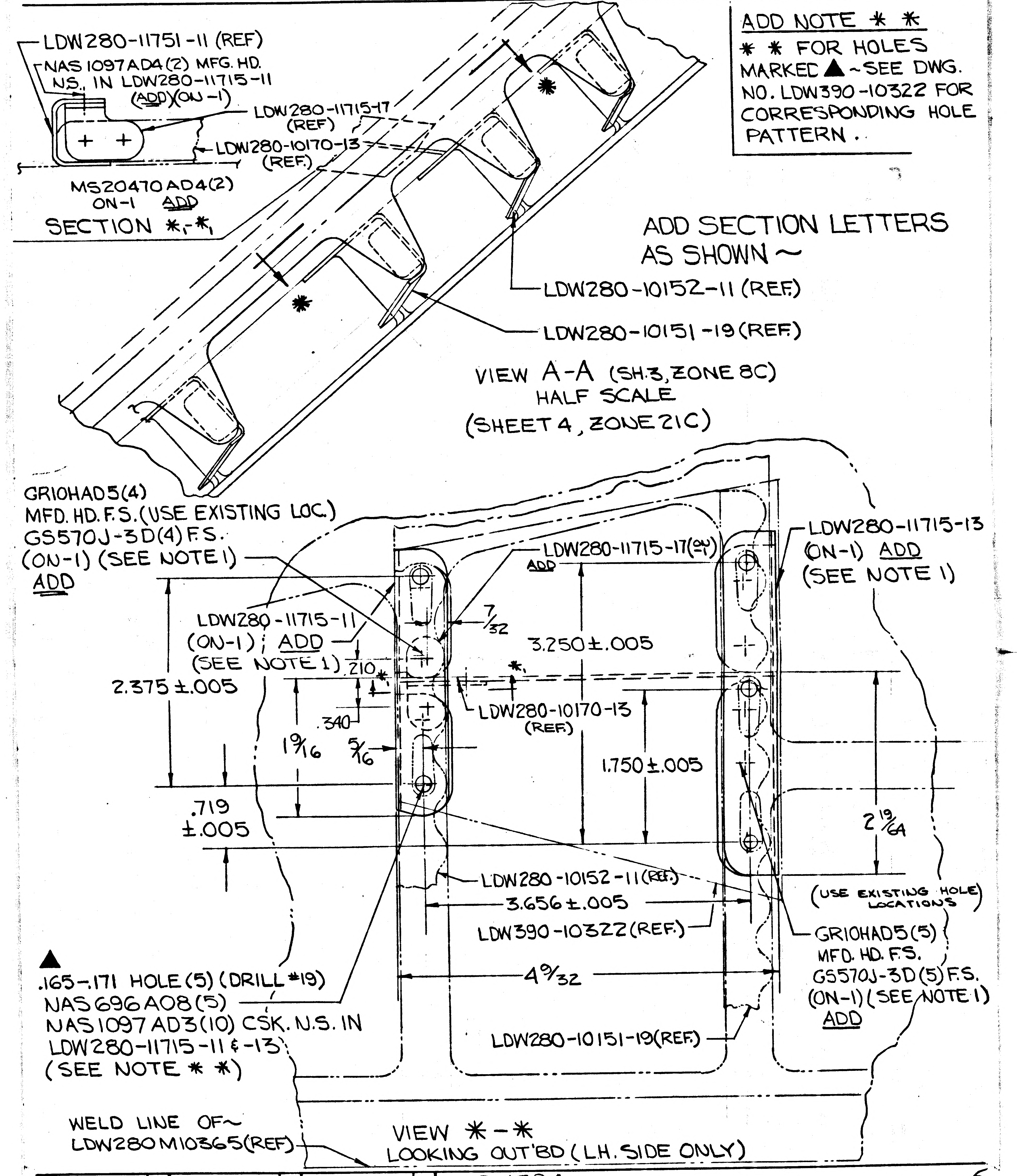

LDW280-11751-11 (REF)
NAS1097AD4(2) MFG. HD. N.S., IN LDW280-11715-11 (ADD)(ON-1)
LDW280-11715-17 (REF)
LDW280-10170-13 (REF)
MS20470AD4(2) ON-1 ADD
SECTION *1-*1
LDW280-10152-11 (REF)
LDW280-10151-19 (REF)
GR10HAD5(4) MFD. HD. F.S. (USE EXISTING LOC.) GS570J-3D(4) F.S. (ON-1) (SEE NOTE 1) ADD
LDW280-11715-17(ON-1) ADD
LDW280-11715-13 (ON-1) ADD (SEE NOTE 1)
LDW280-11715-11 (ON-1); ADD (SEE NOTE 1)
7/32
3.250±.005
.210
2.375±.005
.340
LDW280-10170-13 (REF)
1 9/16
5/16
1.750±.005
.719 ±.005
2 19/64
LDW280-10152-11(REF.)
3.656±.005
LDW390-10322(REF.)
(USE EXISTING HOLE LOCATIONS)
GR10HAD5(5) MFD. HD. F.S. GS570J-3D(5) F.S. (ON-1)(SEE NOTE 1) ADD
4 9/32
LDW280-10151-19(REF.)
▲ .165-.171 HOLE(5) (DRILL #19) NAS696A08(5) NAS1097AD3(10) CSK. N.S. IN LDW280-11715-11 & -13 (SEE NOTE **)
WELD LINE OF~ LDW280M10365(REF)

ADD NOTE **

** FOR HOLES MARKED ▲ ~SEE DWG. NO. LDW390-10322 FOR CORRESPONDING HOLE PATTERN.

ADD SECTION LETTERS AS SHOWN~

VIEW A-A (SH.3, ZONE 8C)
HALF SCALE
(SHEET 4, ZONE 21C)

VIEW *-*
LOOKING OUT'BD (L.H. SIDE ONLY)

DETAIL SPEC REQ | CL II ENGRG CHG | CL I ENGRG CHG | ✓ LCD 1594 ok

5

REASON FOR EO: REVISE LM-2 & LM2 LMP KIT TO PROVIDE CAPABILITY TO FLY LM-1 MISSION WITH LM-2

DESCRIPTION OF EO: ON-1: ADDED LDW280-11715-11, -13 & -17, ADDED GR10HAD5(9), MS20470AD4(2), NAS1097AD4(2), NAS696A08(5), NAS1097AD3(10) ADDED NOTE **, ADDED VIEW *-* & *1-*1, ADDED SECT LETTERS ** TO VIEW A-A

Ⓡ GAEC~ EO RELEASE C
JK 8/25/7

MODEL	PROCURING ACTIVITY NO.	GAEC UNIT NO.	SUB CONTR UNIT NO.
LM		LM-2(32)	

DRAWING CHANGE REQD: REVISE DWG ✓ | RECORD EO
DISPOSITION OF PARTS: REWORK ✓ | SCRAP

APPROVED BY	VDI	SUPPORT	RELIAB. GROUP	GROUP LEADER	STRESS GROUP	LIAISON ENGRG	PROJ ENGRG	~~GOVT~~
DATE	8/23/67			8/23/67	8.23		8/23/67	8-24-67

PRIORITY C
DRAWING TITLE: CABIN ASSY.~ASCENT STAGE
DRAWING NO. LDW280-52010
EO NO. E10

8/24
ISSUED BY GMGreen & Geo. W Rocklein X7035 8/23/67 SECTION VEH. DES. INT. GROUP NO. 335 PL 25

01
NAS 9-1100

ENG 32.1 REV 3-65

GRUMMAN AIRCRAFT ENGINEERING CORP.
CODE IDENT NO. 26512
ENGINEERING ORDER

DWG. NO. LDW 280-52010
EO NO. F1
CONTROL INFO NO. LDW 280A-8953

THIS E.O. IS A REVISION OF E.O. E-10

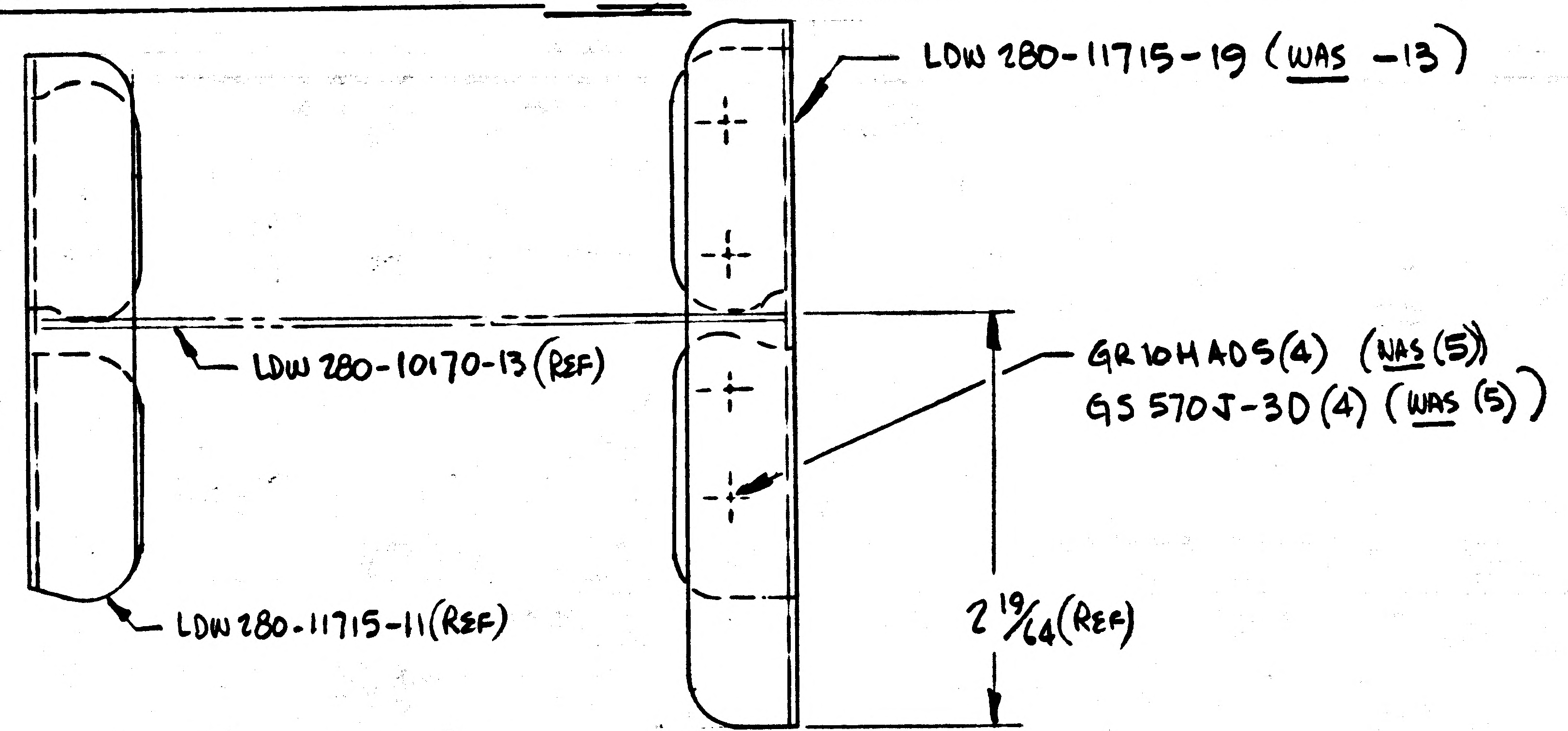

VIEW *-* (REF E.O. E-10)

DETAIL SPEC REQ ☐	CL II ENGRG CHG ☐	CL I ENGRG CHG ✓	LCD# 1594 ok 5

REASON FOR EO: REVISE LM-2 & LM-2 LMP KIT TO PROVIDE CAPABILITY TO FLY LM-1 MISSION WITH LM-2

DESCRIPTION OF EO: THIS IS A REVISION OF E.O. E-10.
ON-1: LDW 280-11715-19 WAS LDW 280-11715-13
GR10HAD5(4) & GS570J-3D(4) WAS GR10HAD5(5) & GS570J-3D(5)

Ⓡ GAEC EO RELEASE: JK 8/26/7

MODEL	PROCURING ACTIVITY NO.	GAEC UNIT NO.	SUB CONTR UNIT NO.
LM		LM-2(32)	

DRAWING CHANGE REQD		DISPOSITION OF PARTS		APPROVED BY								
✓		-1		Jef			FDR	Bw				
REVISE DWG	RECORD EO	REWORK	SCRAP	DATE	8/25/67			8/25/67	8-25		8/25/67	8/26/67
					VDI	SUPPORT	RELIAB. GROUP	GROUP LEADER	STRESS GROUP	LIAISON ENGRG	PROJ ENGRG	~~GOVT~~

PRIORITY	DRAWING TITLE	DRAWING NO.	EO NO.
C	CABIN ASSEMBLY – ASCENT STAGE	LDW 280-52010	F1

ISSUED BY 8/25 GEO W. ROCKLEIN x7033 8/25/67 SECTION VEH. DES. INT GROUP NO. 335 PL 25

01 NAS 9-1100

ENG 32.1 REV 3-65

GRUMMAN AIRCRAFT ENGINEERING CORP.
CODE IDENT NO. 26512
ENGINEERING ORDER

DWG. NO. LDW280-52010
EO NO. F3
CONTROL INFO NO. LDW280B0197

THIS EO IS A REVISION OF EO E9
ON -3 INSTL WAS ON-1 INSTL
CALLOUT LDW280M10076-1 & -2 (REF) WAS LDW280M10076-1 (REF)

DETAIL SPEC REQ		CL II ENGRG CHG		CL I ENGRG CHG	✓ LCD1608A

REASON FOR EO
REDUNDANT GROUNDING OF NEGATIVE BUS

DESCRIPTION OF EO ON-3 INSTL WAS ON-1
REF EO E9
IN FIELD OF EO CALLOUT LDW280M10076-1 & -2 (REF) WAS LDW280M10076-1 (REF)

GAEC EO RELEASE JK 10/31/67

MODEL	EFFECTIVITY		
	PROCURING ACTIVITY NO.	GAEC UNIT NO.	SUB CONTR UNIT NO.
LM		LM-2(32)	

DRAWING CHANGE REQD		DISPOSITION OF PARTS	
✓		✓	
REVISE DWG	RECORD EO	REWORK	SCRAP

APPROVED BY								
DATE	10/30/67			10-30-67	10-31		10/31/67	10-31-67
C	VDI	SUPPORT	RELIAB. GROUP	GROUP LEADER	STRESS GROUP	LIAISON ENGRG	PROJ ENGRG	

PRIORITY	DRAWING TITLE	DRAWING NO.	EO NO.
C	CABIN ASSY A/S	LDW280-52010	F3

10-31-67
ISSUED BY HUGH RYAN X1392 10-30-67 SECTION VDI (EQUIP LINES) GROUP NO. 332 PL 25

01

NAS 9-1100

ENG 32.1 REV 3-65

GRUMMAN AIRCRAFT ENGINEERING CORP.
CODE IDENT NO. 26512
ENGINEERING ORDER

DWG. NO. LDW280-52010
EO NO. F4
CONTROL INFO NO. LDW280A-9467

ON-3 INSTL, LDW280-28484-9&-10
WAS LDW280-28484-3&-4

DETAIL SPEC REQ		CL II ENGRG CHG		CL I ENGRG CHG	✓ LCD-2230 ⑤

REASON FOR EO: PROVIDE ADDITIONAL CLEARANCE BETWEEN FRAME & HEATER

DESCRIPTION OF EO: ON-3 LDW280-28484-9&-10 WAS LDW280-28484-3&-4

GAEC EO RELEASE: Ⓡ JK 10/31/7

MODEL	PROCURING ACTIVITY NO.	GAEC UNIT NO.	SUB CONTR UNIT NO.
LM		LM-2 (32)	

DRAWING CHANGE REQD		DISPOSITION OF PARTS		APPROVED BY	JAP			FDR			
REVISE DWG	RECORD EO	REWORK	SCRAP	DATE	10/28/67			10-21-67	10-23		10/24/67
✓		✓		G	VDI	SUPPORT	RELIAB. GROUP	GROUP LEADER	STRESS GROUP	LIAISON ENGRG	PROJ ENGRG

~~GSFP~~ 10-31-67

PRIORITY	DRAWING TITLE	DRAWING NO.	EO NO.
C	CABIN ASSY ASCENT STAGE	LDW280-52010	F4

10/27
ISSUED BY JOHN K. LEE SECTION VDI GROUP NO. 335 PL 25

01

NAS 9-1100

MODEL OR END ITEM	NEXT ASSY	MODULE OR SER NO.	REQD PER MODULE OR END ITEM	MODEL OR END ITEM	NEXT ASSY	MODULE OR SER NO.	REQD PER MODULE OR END ITEM	MODEL OR END ITEM	NEXT ASSY	MODULE OR SER NO.	REQD PER MODULE OR END ITEM
								LEM	LDW280M52137	LEM-2(32)	1
PART NO.		GAEC SCH NO.		PART NO.		GAEC SCH NO.		PART NO. LDW280-52011-1		GAEC SCH NO. 31-3	

(22)

SH REV STATUS: FOR DESCRIPTION OF REV SEE SUBQ SH

SHEET	1.00	1.10	2.00	2.01	3.00	4.00			
REV	B	B	B	B	B	B			
SHEET		1.11							
REV		B							
SHEET									
REV									

LAST SECT LTR USED	Y	GRUMMAN REL INFO A/B		
		PRIM NO.	VE(001)	
LAST DASH NO. USED	-1	215	MP-B	6-30-6K

UNLESS OTHERWISE SPECIFIED DIMENSIONS ARE IN INCHES.
TOLERANCE UNLESS SPECIFIED
FRACTIONS - DECIMALS – ANGLES
±1/32 ±.020 ±1/2°

ORIG DWG AUTH
DETAIL SPEC REQUIREMENT
CLASS II ENGRG CHANGE
CLASS I ENGRG CHANGE

CONTRACT NO. NAS9-1100
LINE ITEM #1
DOCUMENTATION TYPE II

DRAWN BY	E.HERCZEG 12-8-65	WEIGHTS	12-13
LAYOUT BY	F.CURASI	~~RELIABILITY~~	
CHECKED BY	J.S. 12-9-65		
GR LEADER	J. PUSATERI 12/11		
DES INT	12/13		
		PROJ ENGR	12/13
STRUCTURE	8W 12-13	REL GROUP	12/14
STRUCTURE	HILDERMAN 12/13		

GRUMMAN AIRCRAFT ENGRG CORP
BETHPAGE, L. I., NEW YORK

FRONT FACE ASSY
ASCENT STAGE - CABIN

SIZE	CODE IDENT NO.		
B	26512	LDW280-52011	B

SCALE NONE
SHEET 1 OF 7

ENG 77.1 9-64

01

NAS 9-1100

REVISIONS

CHANGE LTR	ITEM NO.	SHEET NO.	ZONE	SH CHG LTR	GRUMMAN INFO ONLY	DET SPEC	CLASS I	CLASS II	ENGRG ORDER	DESCRIPTION	EFFECTIVITY	DISPOSITION OF EXISTING PARTS		CHANGED BY AND DATE	ENGRG APPD	GOVT APPD
												REWORK	SCRAP			
A	1	1, 1.10, 2.01 & 3							E.O. A1	IN FIELD & B/M ON-1 HL10V-5-5(4) F.S., HL70-5(4) N.S., 659013-8(4) N.S., GW10G-2(4) N.S., SPOTFACE TO FLAT, .500 DIA., .032 COR. R. N.S., SEE NOTE #1 & 2 WAS 75LP-E5-3(4) N.S., NAS1080D5(4), 5-147 (4), SPOTFACE 5/16 DIA. (4), 1/3 COR. R. TO FLAT, SEE NOTE #1 & 2., SH.1 OF 6 WAS 1 OF 5, ADDED SH.1.10.	LEM-2	✓		CARLINO 3-3-66		
	2	1, 1.10, 3 & 4							E.O. A2	IN FIELD ON-1 ADDED SHIM AS REQD. AND NOTE 7.						
	3	1.10, 2.01 & 4							E.O. A3	IN FIELD & B/M HL10V5-5 MFG HD N.S. (SEE NOTE #1), HL70-5, GW10G-2, 659013-8 WAS 75LP-E5 HD N.S., NAS1080D5, #5-147., REVISED NOTE #1.						
	4	1.10, 2.01 & 3							E.O. A4	IN FIELD & B/M ON-1 HL18-5-3(2), HL70-5(2) F.S., GW10G2(2), 659013-8(2) WAS 75LP-E5-3(2) HD N.S., SEE NOTE #1, NAS1080D5(2), #5-147(2).						
	5	1.10, 2.01 & 4							E.O. A5	IN FIELD & B/M HL19-5-5(4), 659013-8(4) N.S., GW10G-2(4) N.S., HL70-5(4) N.S., SEE NOTE 5 WAS HL10V5-5 (3), 659013-8(3), HL70-5(3), 75LP-E-5-4(1) HD N.S., NAS1080D5, #5-147.						
B	1	1.00, 1.10, 3.00							EO B1	ADDED NOTE-"INSTALLATION OF GR10HAD4 AND GR10HAD5 RIVETS SHALL ALSO BE CONSIDERED ACCEPTABLE EVEN THOUGH A PORTION OF THE "O" RING EXTENDS BEYOND THE PERIPHERY OF THE RIVET HEAD."	LEM-2(32)	✓		T. FREDA 6-7-66 jdc		
	2	1.10, 2.00, 4.00	9G						EO B2	ON-11 ADDED GB11D-3-76(1) TO LDW280M10085-7 WITH MS20470AD4(2), ADDED GB11E-1-76(1) TO LDW280M10085-9 WITH MS20470AD4(2)	LEM-2(32)	✓				
	3								EO B3	SUPERSEDED BY EO B5	NOT REQD	NOT	REQD			
	4	1.10, 2.00, 2.01, 4.00							EO B4	CALLOUTS IN SECTION D-D WERE CHANGED FROM MFR HEAD N.S. TO MFR HEAD OPP SIDE- IN VIEW P-P ADDED LDW280-16010-1 &-2, ADDED 75LP-E5-4 (2) NAS1080D5(2) #5-147(2).	LEM-2(32)	✓				

FOR CONTINUATION OF REVISIONS SEE SHEET 1.11

GRUMMAN AIRCRAFT ENGRG CORP, BETHPAGE, L. I., NEW YORK

SIZE	CODE IDENT NO.		
B	26512	LDW280-52011	B
SCALE NONE			SHEET 1.10

ENG 77.3 5-64

01

NAS 9-1100

REVISIONS

CHANGE LTR	ITEM NO.	SHEET NO.	ZONE	GRUMMAN INFO ONLY	DET SPEC	CLASS I	CLASS II	ENGRG ORDER	DESCRIPTION	EFFECTIVITY	DISPOSITION OF EXISTING PARTS REWORK	DISPOSITION OF EXISTING PARTS SCRAP	CHANGED BY AND DATE	ENGRG APPD	GOVT APPD
B	5	1.11, 2.01, 4.00						EO B5	SH 1.00 OF 7 WAS SH 1.00 OF 6 ADDED SH 1.11 SUPERSEDES EO B3 IN SECT. D-D, ON LH SIDE ONLY REVERSED MFG HD & ADDED 659013-8(10) & GW10G-2 (10)	LEM-2(32)	✓		T. FREDA 6-7-66		
	6	1.11, 2.00, 3.00							REF EO B2 ON-11 S/B ON-1, ADDED SECT. U-U, V-V, W-W, Y-Y. ADDED NOTE 9 LDW280M10085-9 WAS LDW280M10085-2 & LDW280M10085-7 WAS LDW280M10085-1.	LEM-2(32)	✓				

FOR CONTINUATION OF REVISIONS SEE SHEET ________

GRUMMAN AIRCRAFT ENGRG CORP, BETHPAGE, L. I., NEW YORK

SIZE	CODE IDENT NO.		
B	26512	LDW280-52011	B
SCALE NONE			SHEET 1.11

ENG 77.3 5-65

01

NAS 9-1100

QTY PER ASSEMBLY						-1	CODE IDENT	PART NO.	I&T	NOMENCLATURE OR DESCRIPTION	MATERIAL	GOVT SPEC	COML SPEC	STOCK SIZE	PROCESS SYM	FINISH NO.	ZONE
						1		GB11D-3-76	E	BRACKET	GRUMMAN STD						
						1		GB11E-1-76	E	BRACKET	GRUMMAN STD						
						1		LDW280M10161-3	E	STRAP	SEE DWG						3B
						1		M10160-3		STRAP							6B
						1		M10109-1		BULKHEAD							7F
						1		M10086-1		STIFFENER							5G
						1		M10085-9		WEB							9F
						1		M10085-7		WEB							8F
						1		M10011-2		FITTING							3C
						1		M10011-1		FITTING							13C
						1		-52016-1		PANEL ASSY							
						1		-51015-2		FACE ASSY							8H
						1		-51015-1		FACE ASSY							9G
						1		-16010-2		BRACKET ASSY							7G
						1		-16010-1		BRACKET ASSY							
						2		-10109-25		SPLICE							6D
						1		-24									7D
						1		-23									7D
						1		-20									6D
						1		-19									6D
						2		LDW280-10109-11		SPLICE	SEE DWG						5C
								LDW280-52011-1	E	FRONT FACE ASSY					NONE	NONE	

SYM OR NO.	PROCESS OR FINISH	GRUMMAN SPEC OR MILITARY SPEC	SYM OR NO.	PROCESS OR FINISH	GRUMMAN SPEC OR MILITARY SPEC	SYM OR NO.	PROCESS OR FINISH	GRUMMAN SPEC OR MILITARY SPEC

I&T: IDENTIFICATION AND TRACEABILITY IN ACCORDANCE WITH :
NONE

GRUMMAN AIRCRAFT ENGRG CORP, BETHPAGE, L. I., NEW YORK

SIZE	CODE IDENT NO.		
B	26512	LDW280-52011	B

SCALE NONE
SHEET 2.00

ENG 77.2 7-65

01

NAS 9-1100

QTY PER ASSEMBLY -1	CODE IDENT	PART NO.	I&T	NOMENCLATURE OR DESCRIPTION	MATERIAL	GOVT SPEC	COML SPEC	STOCK SIZE	PROCESS SYM	FINISH NO.	ZONE
159	02697	659013-8	E	STAT-O-SEAL							
566	02697	#5-147	↑	O-RING							
12		HL19-5-5		LOCKBOLT	STD PART						
141		GW10G2		WASHER	GRUMMAN STD						
17		NAS1303-3		BOLT	STD PART						
14		HL18-5-4		LOCKBOLT	↑						
102		HL18-5-3		↑							
6		HL10V-5-5									
1	29666	75LP-E5-7									
4	↑	75LP-E5-6									
3		75LP-E5-5									
153		75LP-E5-4									
30		75LP-E5-3									
35	↓	75LP-E5-2									
3	29666	65172-8-6									
				↓							
28		NAS1525-3		LOCKBOLT							
3		NAS1080R8		COLLAR							
26.4		NAS1080D5		COLLAR							
136		HL70-5		COLLAR							
17		MS21040-3		NUT	↓						
		MS20470AD5		RIVET	STD PART						
		MS20470AD4		↑	STD PART						
5		GR10H-AD5-12			GRUMMAN STD						
7		GR10H-AD5-9			↑						
37		GR10H-AD5-8									
57		GR10H-AD5-7									
100		GR10H-AD5-6									
49		GR10H-AD5-5	↓	↓	↓						
64		GR10H-AD5-4	E	RIVET	GRUMMAN STD						

SYM OR NO.	PROCESS OR FINISH	GRUMMAN SPEC OR MILITARY SPEC	SYM OR NO.	PROCESS OR FINISH	GRUMMAN SPEC OR MILITARY SPEC	SYM OR NO.	PROCESS OR FINISH	GRUMMAN SPEC OR MILITARY SPEC

I & T: IDENTIFICATION AND TRACEABILITY IN ACCORDANCE WITH :
NONE

GRUMMAN AIRCRAFT ENGRG CORP, BETHPAGE, L. I., NEW YORK

SIZE	CODE IDENT NO.		
B	26512	LDW280-52011	B

SCALE NONE SHEET 2.01

ENG 77.2 7-65

01

NAS 9-1100

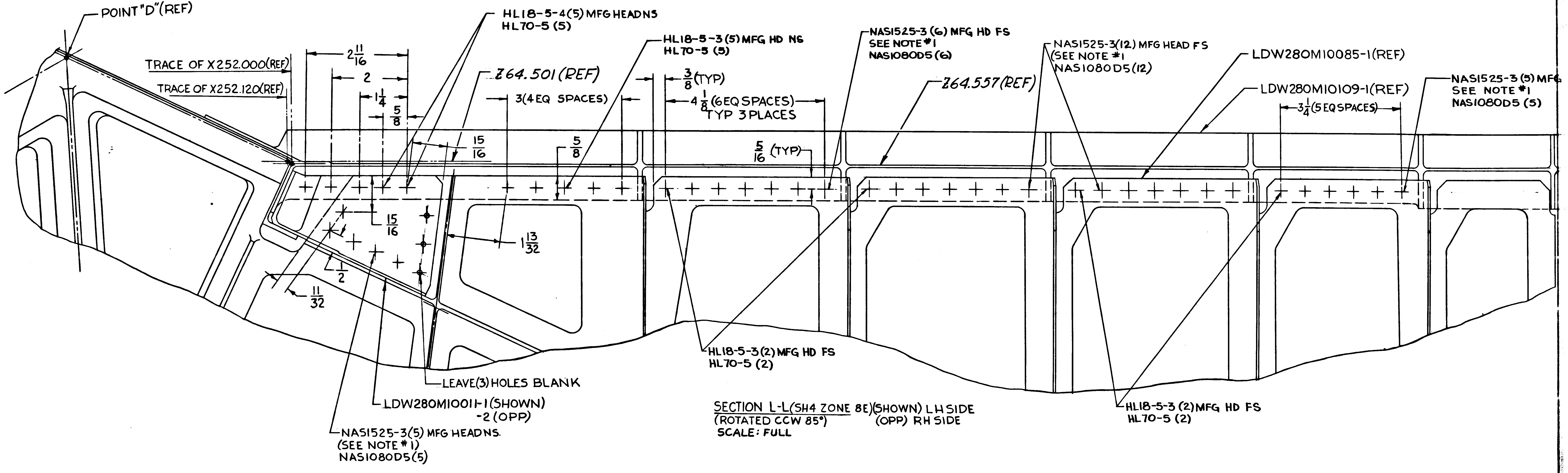
POINT "D" (REF)
TRACE OF X252.000 (REF)
TRACE OF X252.120 (REF)
2 11/16
2
1 1/4
5/8
15/16
15/16
1/2
11/32
Z64.501 (REF)
3 (4 EQ SPACES)
1 13/32
5/8
3/8 (TYP)
4 1/8 (6 EQ SPACES) TYP 3 PLACES
5/16 (TYP)
Z64.557 (REF)
3 1/4 (5 EQ SPACES)
HL18-5-4 (5) MFG HEADNS
HL70-5 (5)
HL18-5-3 (5) MFG HD NS
HL70-5 (5)
NAS1525-3 (6) MFG HD FS
SEE NOTE *1
NAS1080D5 (6)
NAS1525-3 (12) MFG HEAD FS
(SEE NOTE *1
NAS1080D5 (12)
LDW280M10085-1 (REF)
LDW280M10109-1 (REF)
NAS1525-3 (5) MFG
SEE NOTE *1
NAS1080D5 (5)
LEAVE (3) HOLES BLANK
LDW280M10011-1 (SHOWN)
-2 (OPP)
NAS1525-3 (5) MFG HEADNS.
(SEE NOTE *1)
NAS1080D5 (5)
HL18-5-3 (2) MFG HD FS
HL70-5 (2)
HL18-5-3 (2) MFG HD FS
HL70-5 (2)

SECTION L-L (SH4 ZONE 8E) (SHOWN) LH SIDE
(ROTATED CCW 85°) (OPP) RH SIDE
SCALE: FULL

4/4

01/04 NAS 9-1100

CODE IDENT NO. 26512
LDW280-52011 SHEET 3

DW280M10085-1(REF)
LDW280M10109-1(REF)
NAS1525-3(5) MFG HD FS
SEE NOTE #1
NAS1080D5(5)
3 1/4 (5 EQ SPACES)
LDW280-10109-23 LH SIDE
-24 RH SIDE
SEE NOTE #5
GR10HAD5(REF)
#5-147(REF)
75LP-E5(REF)
G
LDW280-52016-1(REF)
+Z 77.375(REF)
LDW280-10109-25
SEE NOTE #5
NAS1080D5(REF)
SEE NOTE #5
#5-147(REF)
X284.562(REF)
75LP-E5(REF)
HL18-5-3(3) MFG HEAD N.S.
SEE NOTE #1
GW10G2(3) NS
659013-8(3) NS
HL70-5(3) FS
LDW280-10109-19 LH SIDE
-20 RH SIDE
+Z 78.696(REF)
X 277.830(REF)
SEE N
GR10HAD5(REF)
75L
LDW28
HL18-5-3(6) MFG HD NS
SEE NOTE #1
GW10G2 (6) NS
659013-8(6) NS
HL70-5(6) FS
TRIM ON ASSY TO GIVE
.032 MAX GAP
.625
LDW280M10085-1(REF)
HL10V-5-5(4) F.S.
HL70-5(4) N.S.
659013-8(4) N.S.
GW10G-2(4) N.S.
SPOTFACE TO FLAT (4)
.500 DIA., .032 COR. R. N.S.
SEE NOTE #1 & 2
A1
H
LDW280-10109-23(REF)
LDW280-10109-25(REF)
LDW280-52016-1(REF)
LDW280-10109-19(REF)
.625
1 1/4
℄ BUTT JOINT
H
TRACE OF X284.562(REF)
GR10HAD5-6(17)
MFG HEAD N.S
#5-147(17)
LDW280-10109-23(REF)
LDW280M10085-1(REF)
SEE NOTE #4
LDW280-10109-25(REF)
LDW280-52016-1(REF)
TRACE OF X284.562(REF)
75LP-E5-3(7)
MFG HEAD NS
(SEE NOTE #1)
NAS1080D5(7)
SEE NOTE #2
#5-147(7)
LDW280M10085-1(REF)
BEAM REF PLANE(REF)
GR10HAD5-7(18)
MFG HEAD N.S.
#5-147(18)
HL18-5-3(2)
HL70-5(2) F.S.
GW10G2(2)
659013-8(2)
A4
SPOTFACE LDW280M-
10085-1 TO FLAT (NS)
.500 DIA, .032 CORNER R.
REMOVE EXCESS
MATL. (SHADED AREA)
TO FLAT AFTER
SPOTFACE.
LDW280-52016-1(REF)
LDW280-10109-23(REF)
GR10HAD5-6(21)
MFG HEAD NS
#5-147(21)
BEAM REF PLANE
TRACE OF X257.
NAS1303-3
SEE NOTE
GW10G2 (4)
659013-8
MS21040-
LDW28
75LP-E5-
SEE NOTE
NAS1080
#5-147
HL18-5
SEE NO
GW10G2
65901
HL70-
GR10HAD5-5(19)
MFG HD NS
#5-147(19)
.562
.032
+Y14.500(REF)
+Y15.698(REF)
HL18-5-4(5) MFG HD NS
SEE NOTE #1
GW10G2 (5) NS
659013-8(5) NS
HL70-5(5) FS
GR10HAD5-12(2) MFG HD NS
#5-147(2)

SECTION H-H
SCALE: FULL

VIEW G-G
SCALE: FULL

SECTION F-F SH4 ZONE 8H) (SHOW
SCALE: FULL (OPP)
ROTATED CCW 90°

02/04 NAS 9-1100

CODE IDENT NO. 26512
LDW280-52011 SHEET 3

CODE IDENT NO. 26512
LDW280-52011 SHEET 3

6
5
4
3
2
LDW280M10161-3(REF)
+Z75.027(REF)
X 257.025(REF)
SEE NOTE #5
LDW280-10109-11(REF)
GRIOHAD5(REF)
LDW280-10109-19 LH SIDE
-20 R H SIDE
09-25
NAS1080D5(REF)
#5-147(REF)
75LP-E5(REF)
+Z 78.696(REF)
X 277.830(REF)
LDW280M10085-1(REF)
HL18-5-3(10) MFG HD NS
SEE NOTE #1
GW10G2 (10) NS
659013-8 (10) NS
HL70-5(10) FS
75LP-E5-3(7) MFG HD NS
NAS1080D5 (7)
#5-147 (7)
NAS1303-3 (4) MFG HD NS
SEE NOTE #1
GW10G2 (4) NS
MS21040-3 (4) FS
659013-8 (4) NS
SEE DETAIL "T" FOR R.H. SIDE
75LP-E5-2 (26) MFG HEAD NS
SEE NOTE #1
NAS1080D5(26)
SEE NOTE #2
#5-147(26)
.625
TRACE OF X257.025(REF)
LDW280-52016-1(REF)
HL18-5-3(6) MFG HD NS
SEE NOTE #1
GW10G2 (6) NS
659013-8(6) NS
HL70-5(6) FS
LDW280M10161-3(REF)
TRIM ON ASSY TO GIVE
.032 MAX. GAP
.625
LDW280-10109-11
GRIOHAD5-6(11)
MFG HD NS
#5-147(11)
GRIOHAD5-4 (54)
MFG HEAD N.S
#5-147(54)
LDW280-52016-1(REF)
75LP-E5-3(7)
MFG HD NS
NAS1080D5(7)
#5-147(7)
LDW280-52016-1(REF)
GRIOHAD5-6(11)
MFG HD NS
#5-147(11)
.625
HL18-5-3(10) MFG HD NS
SEE NOTE #1
GW10G2 (10) NS
659013-8 (10) NS
HL70-5 (10) FS
NAS1303-3 (4) MFG HD NS
SEE NOTE #1
GW10G2 (4) NS
659013-8 (4) NS
MS21040-3 (4) FS
75LP-E5-2 (9) MFG HD NS
NAS1080D5 (9)
#5-147 (9)
LDW280M10160-3(REF)
TRACE OF X257.025 (REF)
BEAM REF PLANE
GRIOHAD5-4(10) MFG HD NS
#5-147(10)
.625
LDW280-10109-11
LDW280M10085-1(REF)
TRIM ON ASSY TO GIVE
.032 MAX. GAP
BEAM REF PLANE
TRACE OF X257.025(REF)
NAS1303-3(4) MFG HD NS
SEE NOTE #1
GW10G2 (4) NS
659013-8(4) NS
MS21040-3 (4) FS
LDW280M10160-3
A4
280M-
T(NS)
ORNER R.
ESS
D AREA)
ER
75LP-E5-3(9) MFG HD NS
SEE NOTE #1
NAS1080D5(9)
#5-147(9)
A4
LDW280-52016-1(REF)
LDW280M10086-1(REF)
SEE NOTE #4
SEE NOTE #5
GRIOHAD5(REF)
1.750(REF)
#5-147(REF)
1.188
1.250(REF)
75LP-E5(REF)
NAS1080D5(REF)
+Z64.672(REF)
LDW280M10109-1(REF)
X252.197(REF)
+Z 64.557(REF)
X 252.000 (REF)
YO(℄ OF SYM)
SEE LDW280-10119 FOR
LOCATION OF THESE HOLES
HL18-5-3(32) MFG HD NS
SEE NOTE #1
GW10G2(32) NS
659013-8 (32) NS
HL70-5(32) FS
GRIOHAD5-8(35)
(MFG HEAD N.S.)
#5-147 (35)
LDW280-52016-1(REF)
LDW280M10086-1(REF)
J
J
LDW280M10161-3
NAS1303-3 (5) MFG HD NS
SEE NOTE #1
GW10G2 (5) NS
659013-8 (5) NS
MS21040-3 (5) FS
HL18-5-3(32) MFG HD NS
SEE NOTE #1
GW10G2 (32) NS
659013-8(32) NS
HL70-5 (32) FS
LDW280M10085-1
GRIOHAD5-5 (30) MFG HD NS
#5-147 (30)
HL18-5-4 (4) MFG HD NS
SEE NOTE #1
GW10G2 (4) NS
659013-8(4) NS
HL70-5 (4) FS
TRACE OF X252.000(REF)
.562
.032
.562
.032
+Y14.500(REF)
+Y15698(REF)
GRIOHAD5-12(2) MFG HD NS
#5-147(2)
75LP-E5-4(35) MFG HEAD N.S.
SEE NOTE #1
NAS1080D5 (35)
SEE NOTE #2
#5-147(35)
-Y14.000(REF)
LDW280M10109-1(REF)
-Y15.698 (REF)
GRIOHAD5-12(3)
MFG HD NS
#5-147(3)

SECTION F-F SH4 ZONE 8H) (SHOWN) LH SIDE
(OPP) RH SIDE
SCALE: FULL
ROTATED CCW 90°

DETAIL "T"
SCALE: FULL SIZE

SECTION J-J
SCALE: FULL

VIEW B-B (SH4 ZONE 6F) (SHOWN) LH SIDE
(OPP) RH SIDE
SCALE: FULL
ROTATED CCW 25°

SYMBOL LEGEND

✦ ⊕ ✦ ⊕ ✦ ⊕ ✦ ⊕ ✦ ⊕ + — SYMBOLS ARE FOR LOCATION & QUANTITY ONLY

NOTES:
1. INSTALL HILOKS & HUCKBOLTS PER LSP14-15306 & LSP14-15308. HEX HEAD BOLT NAS1303 FINAL HOLE SIZE TO BE (.1895-.1915)
2. SEAL NAS1080 PER LSP14-14102
3. INJECT SEALANT PER LSP14-14102 WHERE INDICATED
4. SEAL FAYING SURFACES PER LSP14-14102
5. SEAL PRESSURE SIDE OF FASTENERS PER LSP14-14102 (OVERCOAT)
6. SEAL IN ACCORDANCE WITH LSP14-14102 EXCEPT THAT CURE MAY BE ACCOMPLISHED AT 160°-TO 180°F FOR 8 HOURS.
7. SHIM AS REQD USING AL ALLOY, QQ-A-255/4 2024-T3, FIN. NO. 76.
8. "INSTALLATION OF GRIOHAD4 AND GRIOHAD5 RIVETS SHALL ALSO BE CONSIDERED ACCEPTABLE EVEN THOUGH A PORTION OF THE "O" RING EXTENDS BEYOND THE PERIPHERY OF THE RIVET HEAD"
9. MS20470AD4(4) RIVETS THROUGH LDW280M10085-7 & -9 TO BE HAND SQUEEZED

03/04 NAS 9-1100

CODE IDENT NO. 26512
LDW280-52011
SHEET 3

LEM

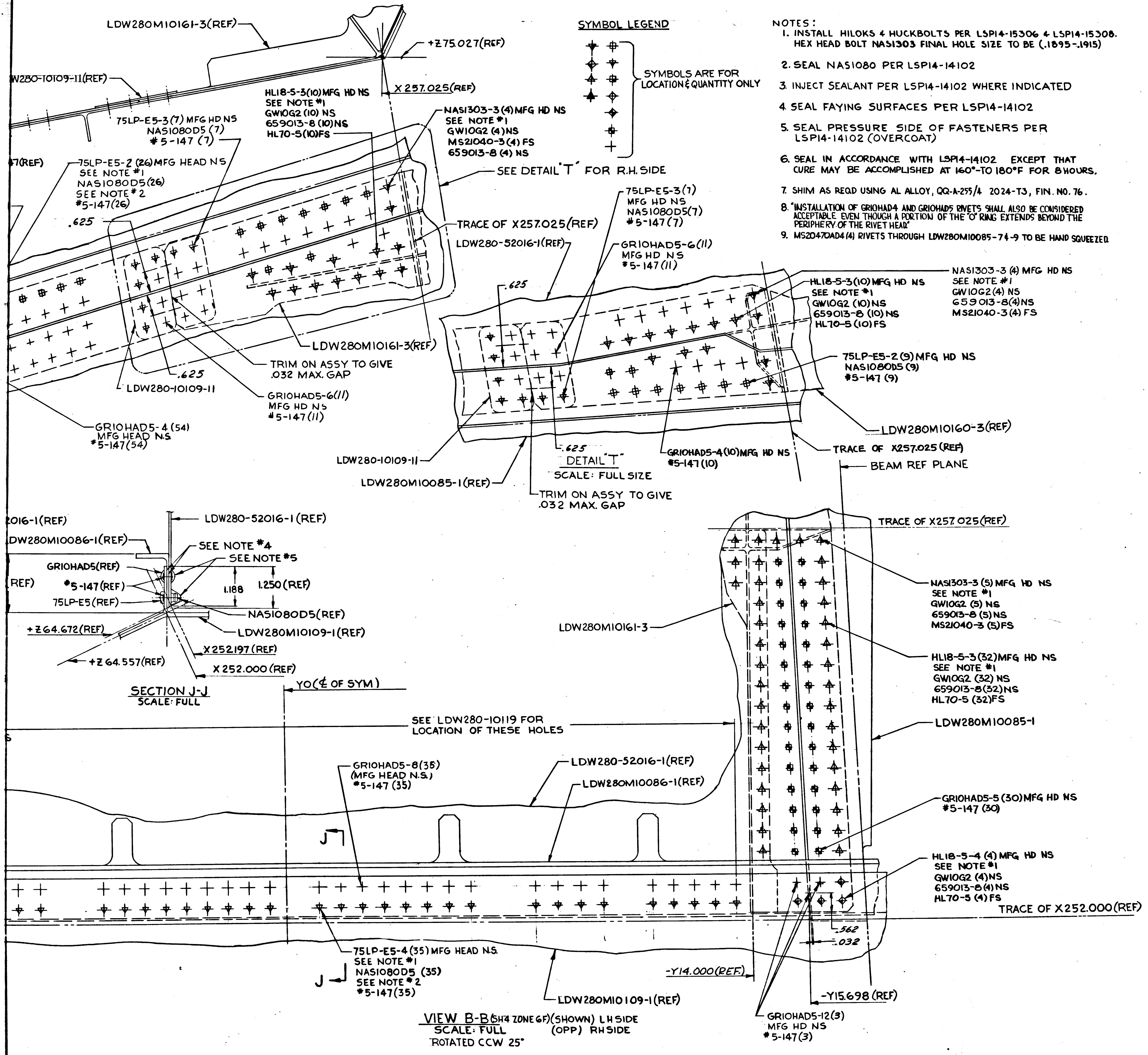
5
4
3
2
1
LDW280M10161-3(REF)
+Z75.027(REF)
W280-10109-11(REF)
X257.025(REF)
SYMBOL LEGEND
SYMBOLS ARE FOR LOCATION & QUANTITY ONLY
HL18-5-3(10) MFG HD NS
SEE NOTE #1
GW10G2 (10) NS
659013-8 (10) NS
HL70-5(10) FS
NAS1303-3 (4) MFG HD NS
SEE NOTE #1
GW10G2 (4) NS
MS21040-3 (4) FS
659013-8 (4) NS
75LP-E5-3 (7) MFG HD NS
NAS1080D5 (7)
#5-147 (7)
7(REF)
75LP-E5-2 (26) MFG HEAD NS
SEE NOTE #1
NAS1080D5(26)
SEE NOTE #2
#5-147(26)
SEE DETAIL 'T' FOR R.H. SIDE
.625
75LP-E5-3(7)
MFG HD NS
NAS1080D5(7)
#5-147(7)
TRACE OF X257.025(REF)
LDW280-52016-1(REF)
GR10HAD5-6(11)
MFG HD NS
#5-147(11)
.625
LDW280M10161-3(REF)
TRIM ON ASSY TO GIVE .032 MAX. GAP
.625
LDW280-10109-11
GR10HAD5-6(11)
MFG HD NS
#5-147(11)
GR10HAD5-4 (54)
MFG HEAD NS
#5-147(54)
HL18-5-3(10) MFG HD NS
SEE NOTE #1
GW10G2 (10) NS
659013-8 (10) NS
HL70-5 (10) FS
NAS1303-3 (4) MFG HD NS
SEE NOTE #1
GW10G2 (4) NS
659013-8(4) NS
MS21040-3 (4) FS
75LP-E5-2 (9) MFG HD NS
NAS1080D5 (9)
#5-147 (9)
LDW280M10160-3(REF)
LDW280-10109-11
.625
DETAIL 'T'
SCALE: FULL SIZE
GR10HAD5-4(10) MFG HD NS
#5-147(10)
TRACE OF X257.025(REF)
BEAM REF PLANE
LDW280M10085-1(REF)
TRIM ON ASSY TO GIVE .032 MAX. GAP
2016-1(REF)
LDW280-52016-1 (REF)
LDW280M10086-1(REF)
SEE NOTE #4
SEE NOTE #5
GR10HAD5(REF)
(REF)
#5-147(REF)
1.188
1.250(REF)
75LP-E5(REF)
NAS1080D5(REF)
+Z64.672(REF)
LDW280M10109-1(REF)
X252.197(REF)
+Z64.557(REF)
X252.000 (REF)
SECTION J-J
SCALE: FULL
Y0(℄ OF SYM)
TRACE OF X257.025(REF)
NAS1303-3 (5) MFG HD NS
SEE NOTE #1
GW10G2 (5) NS
659013-8 (5) NS
MS21040-3 (5) FS
LDW280M10161-3
HL18-5-3(32) MFG HD NS
SEE NOTE #1
GW10G2 (32) NS
659013-8(32) NS
HL70-5 (32) FS
SEE LDW280-10119 FOR LOCATION OF THESE HOLES
LDW280M10085-1
GR10HAD5-8(35)
(MFG HEAD N.S.)
#5-147 (35)
LDW280-52016-1(REF)
LDW280M10086-1(REF)
GR10HAD5-5 (30) MFG HD NS
#5-147 (30)
J
HL18-5-4 (4) MFG HD NS
SEE NOTE #1
GW10G2 (4) NS
659013-8(4) NS
HL70-5 (4) FS
TRACE OF X252.000(REF)
.562
.032
75LP-E5-4 (35) MFG HEAD N.S.
SEE NOTE #1
NAS1080D5 (35)
SEE NOTE #2
#5-147(35)
J
-Y14.000(REF.)
-Y15.698 (REF)
LDW280M10109-1(REF)
VIEW B-B (SH4 ZONE 6F) (SHOWN) LH SIDE
(OPP) RH SIDE
SCALE: FULL
ROTATED CCW 25°
GR10HAD5-12(3)
MFG HD NS
#5-147(3)
5
4
3
2

NOTES:

1. INSTALL HILOKS & HUCKBOLTS PER LSP14-15306 & LSP14-15308. HEX HEAD BOLT NAS1303 FINAL HOLE SIZE TO BE (.1895-.1915)
2. SEAL NAS1080 PER LSP14-14102
3. INJECT SEALANT PER LSP14-14102 WHERE INDICATED
4. SEAL FAYING SURFACES PER LSP14-14102
5. SEAL PRESSURE SIDE OF FASTENERS PER LSP14-14102 (OVERCOAT)
6. SEAL IN ACCORDANCE WITH LSP14-14102 EXCEPT THAT CURE MAY BE ACCOMPLISHED AT 160°-TO 180°F FOR 8 HOURS.
7. SHIM AS REQ.D USING AL ALLOY, QQ-A-255/4 2024-T3, FIN. NO. 76.
8. "INSTALLATION OF GR10HAD4 AND GR10HAD5 RIVETS SHALL ALSO BE CONSIDERED ACCEPTABLE EVEN THOUGH A PORTION OF THE 'O' RING EXTENDS BEYOND THE PERIPHERY OF THE RIVET HEAD"
9. MS20470AD4 (4) RIVETS THROUGH LDW280M10085-7 & -9 TO BE HAND SQUEEZED

MANUFACTURING OPERATIONS UNLESS OTHERWISE SPECIFIED NOTES CHECKED ✓ APPLY TO THIS DWG.	
RUBBER STAMP PART NUMBER AND ALL OTHER MARKINGS IN REGION MARKED ⊠ USE BOTH SIDES IF NECESSARY.	✓
FILLET AND INSIDE CORNER RADII TOLERANCES .016R TO .062R ± .010 .063R TO .250R ± .015 OVER .250R ± .030	
DEPTH SHOWN FOR TAPPED HOLES IS FULL THDS. 2-3 IMP THDS. BEYOND PERMISSIBLE.	
EXTERNAL THREAD LENGTH SHOWN INCLUDES 2 IMPERFECT THREADS MAX.	
DO NOT CADMIUM PLATE & PAINT HOLES OR SURFACES MARKED WITH DOUBLE ASTERISK.	
MISMATCH STEP OF ± .005 PERMISSIBLE DUE TO CHANGE OF CUTTERS AT INSIDE INTERSECTING SURFACES.	
DIAMETERS MARKED MUST BE CONCENTRIC WITHIN FULL INDICATOR READING	
HOLES MUST BE KEPT FREE OF CHROME PLATING SOLUTION.	
ALL DIMENSIONS SHOWN TO BE MET AFTER CADMIUM PLATING. THICKNESS OF PLATE .0003 MIN. TO .0005 MAX. MIN. THICKNESS TO BE .0002 ON THREADED AREAS. NO ALLOWANCE FOR PLATING IN HOLES	
125 √ SURFACE ROUGHNESS INCLUDING REAMED HOLES PER MIL-STD-10	
200 √ FOR ALL DRILLED HOLES	
REMOVE ALL BURRS. BREAK ALL EDGES .015-.031	
INSPECTION INFORMATION MINIMUM PERMISSIBLE [redacted] EDGE DISTANCE [redacted] IS 1½ FASTNR DIA. FROM FASTNR ℄	✓
SYMBOL √ DENOTES SURFACE TO BE MACHINED	
UNLESS OTHERWISE SPECIFIED TOLERANCE ON FLANGES IS ± 1/32	
LENGTHS OF AN, NAS & MS AL ALY RIVETS SHORTER THAN 1 INCH ARE NOT SPECIFIED.	✓
TOLERANCE ON LOFTED DELINEATIONS IS	

DWG SIZE 34 X 142

D

C

B

A

PRINTING INFO ONLY
FULL SIZE SHEET AREA (36 X 144) = 36 SQ. FT.
1/2 SIZE SHEET AREA (1/4 OF FULL) = 9 SQ. FT.

PRINT TRIM LINE

LDW280-52011

LDW280-52011

04/04

NAS 9-1100

CODE IDENT NO. 26512
LDW280-52011
SHEET 3

GRUMMAN AIRCRAFT ENGRG CORP., BETHPAGE, L. I., NEW YORK
LEM
MODEL OR END ITEM
SIZE J
CODE IDENT NO. 26512
LDW280-52011 B
SCALE ½ & NOTED
SHEET 3.00

THIS IS AN ORIGINAL DRAWING

ENG 10.7 6-64

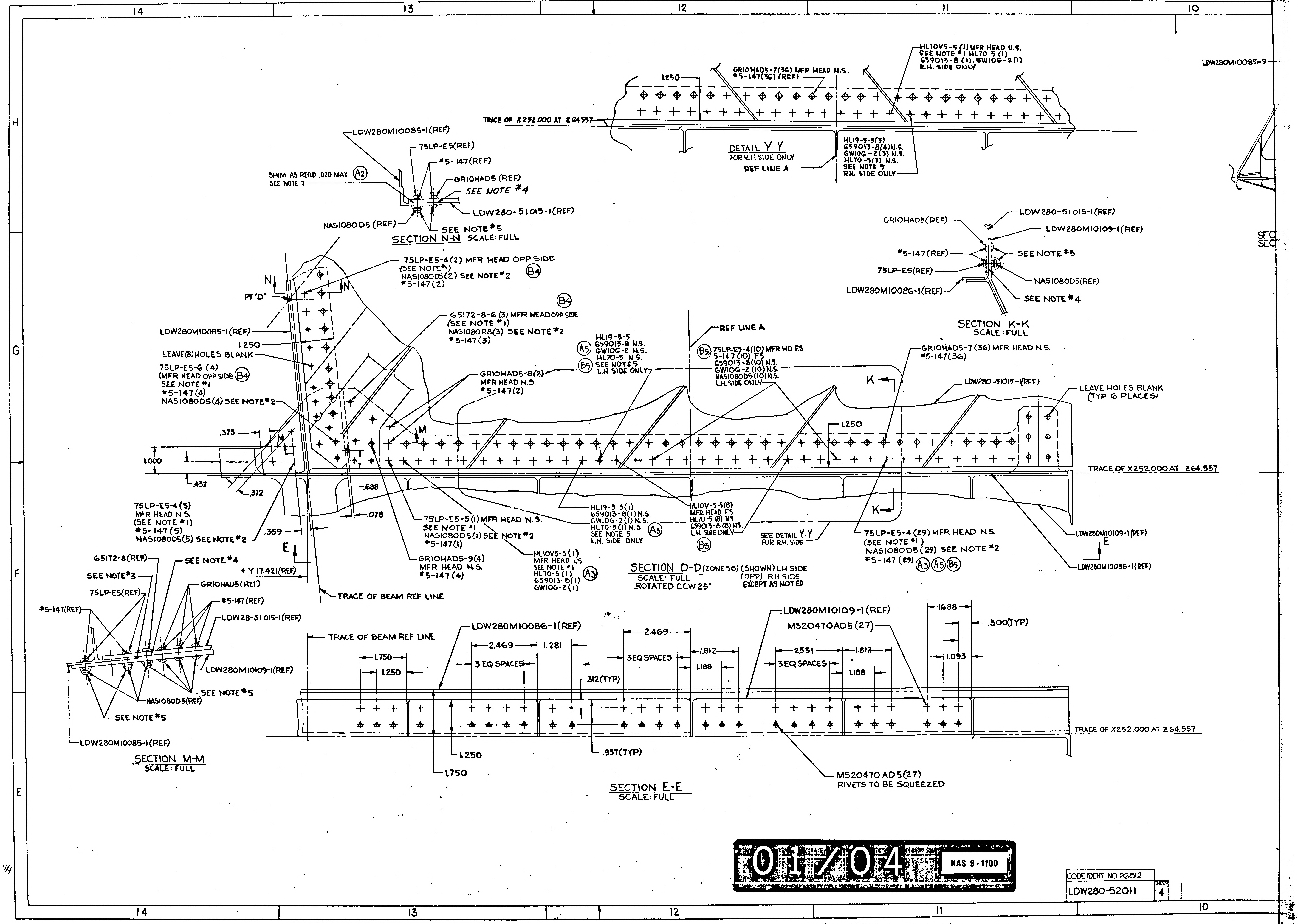
14
13
12
11
10
H
G
F
E
LDW280M10085-9
HL10V5-5 (1) MFR HEAD N.S.
SEE NOTE *1 HL70-5 (1)
659013-8 (1), GW10G-2 (1)
R.H. SIDE ONLY
GR10HAD5-7 (36) MFR HEAD N.S.
*5-147 (36) (REF)
1.250
TRACE OF X 252.000 AT Z 64.557
DETAIL Y-Y
FOR R.H SIDE ONLY
REF LINE A
HL19-5-5 (3)
659013-8 (4) N.S.
GW10G-2 (3) N.S.
HL70-5 (3) N.S.
SEE NOTE 5
R.H. SIDE ONLY
LDW280M10085-1 (REF)
75LP-E5 (REF)
*5-147 (REF)
GR10HAD5 (REF)
SEE NOTE *4
SHIM AS REQD .020 MAX. A2
SEE NOTE 7
LDW280-51015-1 (REF)
NAS1080D5 (REF)
SEE NOTE *5
SECTION N-N SCALE: FULL
GR10HAD5 (REF)
LDW 280-51015-1 (REF)
LDW280M10109-1 (REF)
*5-147 (REF)
SEE NOTE *5
75LP-E5 (REF)
NAS1080D5 (REF)
LDW280M10086-1 (REF)
SEE NOTE *4
SECTION K-K
SCALE: FULL
75LP-E5-4 (2) MFR HEAD OPP SIDE
(SEE NOTE *1)
NAS1080D5 (2) SEE NOTE *2
*5-147 (2)
B4
N
PT "D"
65172-8-6 (3) MFR HEAD OPP SIDE
(SEE NOTE *1)
NAS1080R8 (3) SEE NOTE *2
*5-147 (3)
LDW280M10085-1 (REF)
1.250
LEAVE (8) HOLES BLANK
75LP-E5-6 (4)
(MFR HEAD OPP SIDE) B4
SEE NOTE *1
*5-147 (4)
NAS1080D5 (4) SEE NOTE *2
REF LINE A
HL19-5-5
659013-8 N.S.
GW10G-2 N.S.
HL70-5 N.S.
A5
B5
SEE NOTE 5
L.H. SIDE ONLY
B5 75LP-E5-4 (10) MFR HD F.S.
5-147 (10) F.S.
659013-8 (10) N.S.
GW10G-2 (10) N.S.
NAS1080D5 (10) N.S.
L.H. SIDE ONLY
GR10HAD5-7 (36) MFR HEAD N.S.
*5-147 (36)
GR10HAD5-8 (2)
MFR HEAD N.S.
*5-147 (2)
K
LDW280-51015-1 (REF)
LEAVE HOLES BLANK
(TYP 6 PLACES)
.375
M
1.000
.437
.312
.688
.078
1.250
TRACE OF X252.000 AT Z64.557
75LP-E5-4 (5)
MFR HEAD N.S.
(SEE NOTE *1)
*5-147 (5)
NAS1080D5 (5) SEE NOTE *2
.359
E
+ Y 17.421 (REF)
TRACE OF BEAM REF LINE
75LP-E5-5 (1) MFR HEAD N.S.
SEE NOTE *1
NAS1080D5 (1) SEE NOTE *2
*5-147 (1)
GR10HAD5-9 (4)
MFR HEAD N.S.
*5-147 (4)
HL10V5-5 (1)
MFR HEAD N.S.
SEE NOTE *1
HL70-5 (1)
659013-8 (1)
GW10G-2 (1)
A3
HL19-5-5 (1)
659013-8 (1) N.S.
GW10G-2 (1) N.S.
HL70-5 (1) N.S.
SEE NOTE 5
L.H. SIDE ONLY
A5
HL10V-5-5 (8)
MFR HEAD F.S.
HL70-5 (8) N.S.
659013-8 (8) N.S.
L.H. SIDE ONLY
B5
SEE DETAIL Y-Y
FOR R.H. SIDE
75LP-E5-4 (29) MFR HEAD N.S.
(SEE NOTE *1)
NAS1080D5 (29) SEE NOTE *2
*5-147 (29) A3 A5 B5
LDW280M10109-1 (REF)
LDW280M10086-1 (REF)
SECTION D-D (ZONE 56) (SHOWN) LH SIDE
SCALE: FULL (OPP) RH SIDE
ROTATED CCW 25° EXCEPT AS NOTED
65172-8 (REF)
SEE NOTE *4
SEE NOTE *3
75LP-E5 (REF)
GR10HAD5 (REF)
*5-147 (REF)
*5-147 (REF)
LDW28-51015-1 (REF)
LDW280M10109-1 (REF)
SEE NOTE *5
NAS1080D5 (REF)
SEE NOTE *5
LDW280M10085-1 (REF)
SECTION M-M
SCALE: FULL
TRACE OF BEAM REF LINE
LDW280M10086-1 (REF)
1.750
1.250
2.469
3 EQ SPACES
1.281
.312 (TYP)
2.469
3 EQ SPACES
1.812
1.188
LDW280M10109-1 (REF)
MS20470AD5 (27)
2.531
3 EQ SPACES
1.812
1.188
1.688
.500 (TYP)
1.093
TRACE OF X252.000 AT Z64.557
1.250
1.750
.937 (TYP)
MS20470 AD5 (27)
RIVETS TO BE SQUEEZED
SECTION E-E
SCALE: FULL
SEC
SEC

4/1

01/04 NAS 9-1100

CODE IDENT NO 26512
LDW280-52011
SHEET 4

10 9 8 7 6

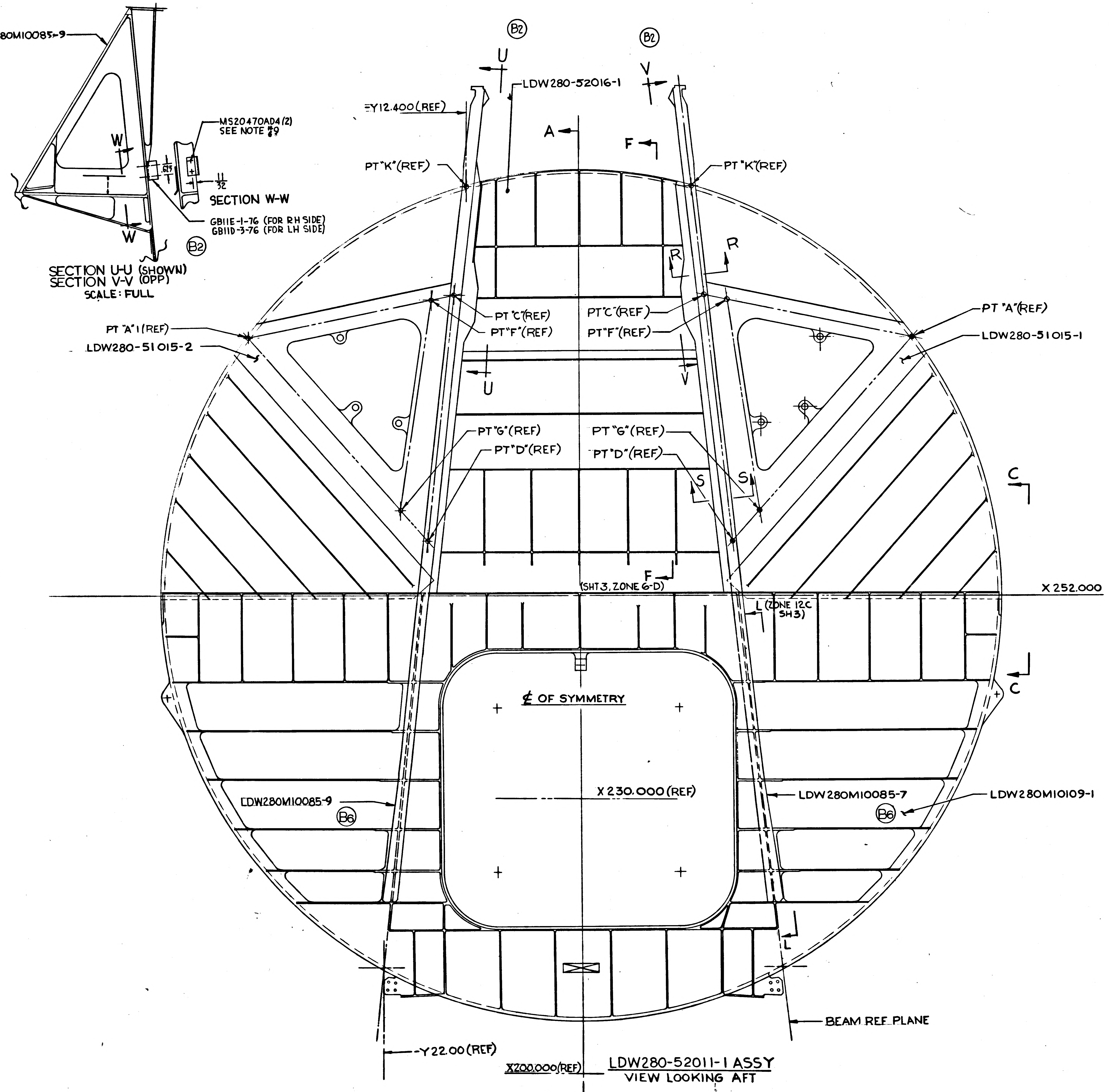
LDW280M10085-9
W
W
MS20470AD4(2) SEE NOTE #9
11/32
B2
GB11E-1-76 (FOR RH SIDE)
GB11D-3-76 (FOR LH SIDE)
SECTION W-W

SECTION U-U (SHOWN)
SECTION V-V (OPP)
SCALE: FULL

015-1(REF)
0M10109-1(REF)
5(REF)
4
LEAVE HOLES BLANK (TYP 6 PLACES)
TRACE OF X252.000 AT Z64.557
LDW280M10109-1(REF)
E
LDW280M10086-1(REF)
TRACE OF X252.000 AT Z64.557
B2
B2
U
V
LDW280-52016-1
=Y12.400(REF)
A
F
PT "K"(REF)
PT "K"(REF)
R
R
PT "A" 1(REF)
LDW280-51015-2
PT "C"(REF)
PT "F"(REF)
PT "C"(REF)
PT "F"(REF)
PT "A"(REF)
LDW280-51015-1
U
V
PT "G"(REF)
PT "D"(REF)
PT "G"(REF)
PT "D"(REF)
S
S
C
F
(SHT 3, ZONE 6-D)
X 252.000
L (ZONE 12C SH3)
C
¢ OF SYMMETRY
X 230.000 (REF)
LDW280M10085-9
B6
LDW280M10085-7
LDW280M10109-1
B6
L
BEAM REF PLANE
-Y22.00(REF)
X200.000(REF)
A

LDW280-52011-1 ASSY
VIEW LOOKING AFT

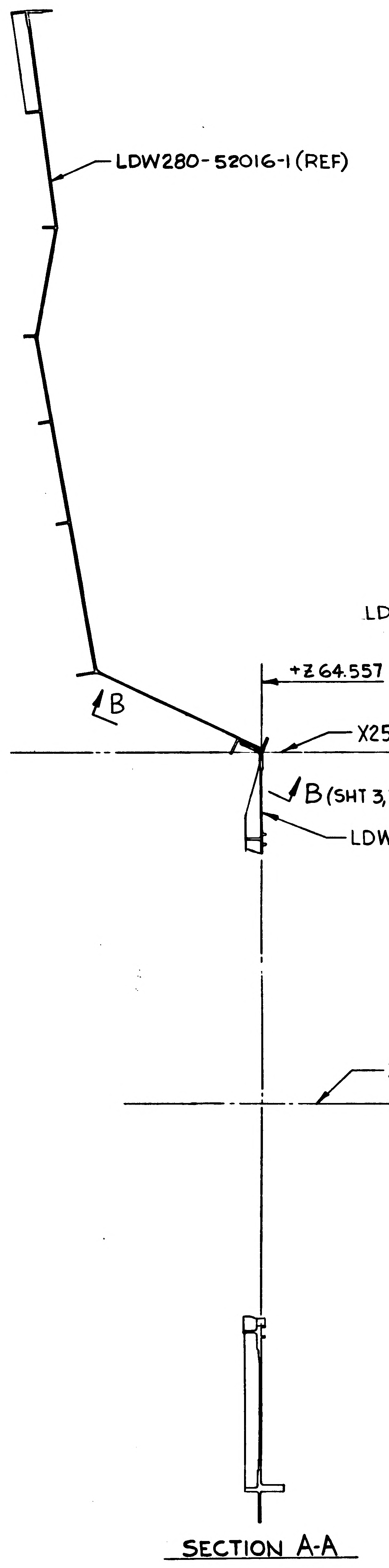
LDW280-52016-1(REF)
B
+Z64.557
X252.000(REF)
B (SHT 3, ZONE 4A)
LDW280M10109-1(REF)
X230.000(REF)

SECTION A-A

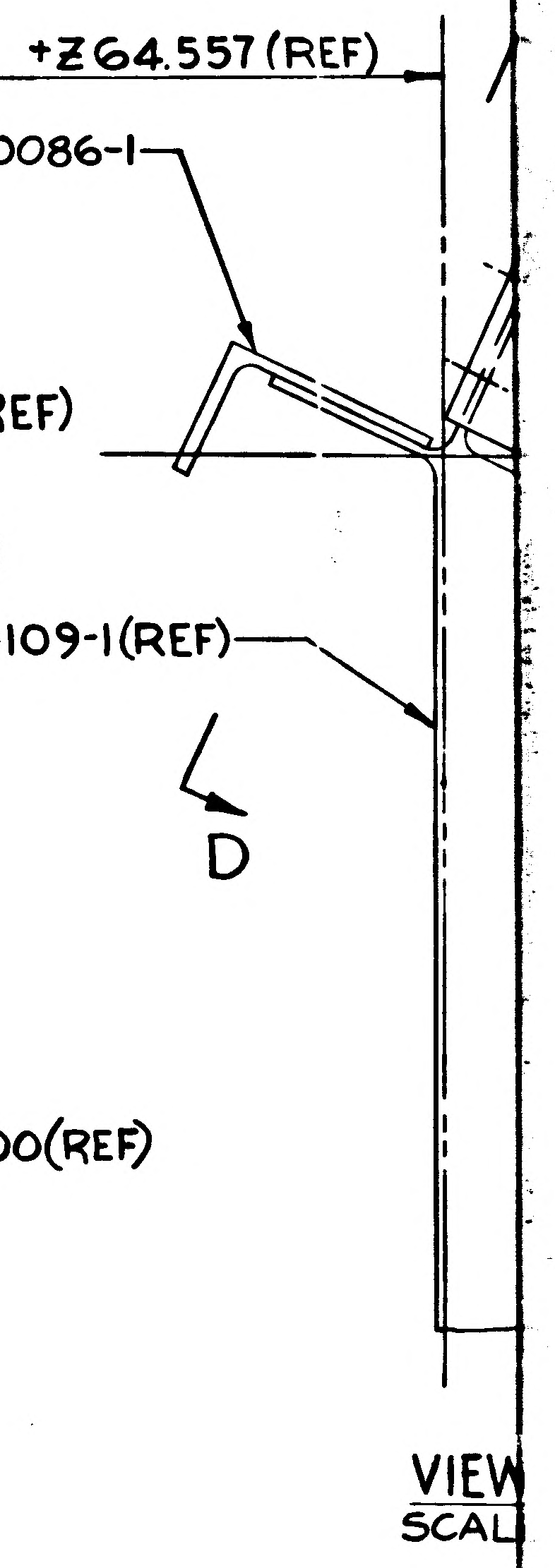
+Z64.557(REF)
LDW280M10086-1
D
VIEW
SCAL

ODE IDENT NO 26512	
DW280-52011	SHEET 4

02704 NAS 9-1100

CODE IDENT NO 26512	
LDW280-52011	SHEET 4

10 9 8 7 6

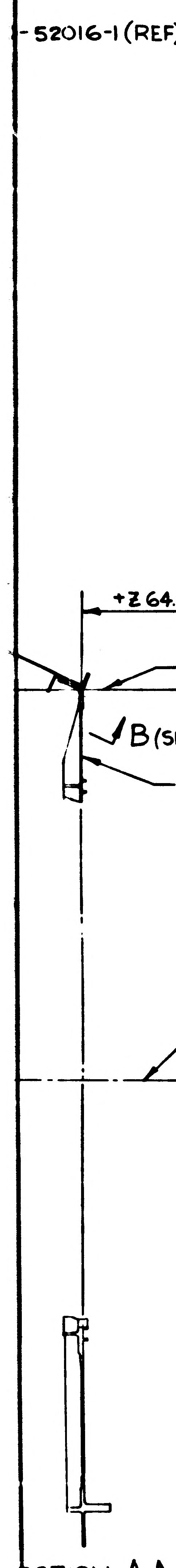
-52016-1 (REF)
+Z64.557
X252.000(REF)
B (SHT 3, ZONE 4A)
X230.000(REF)

ECTION A-A

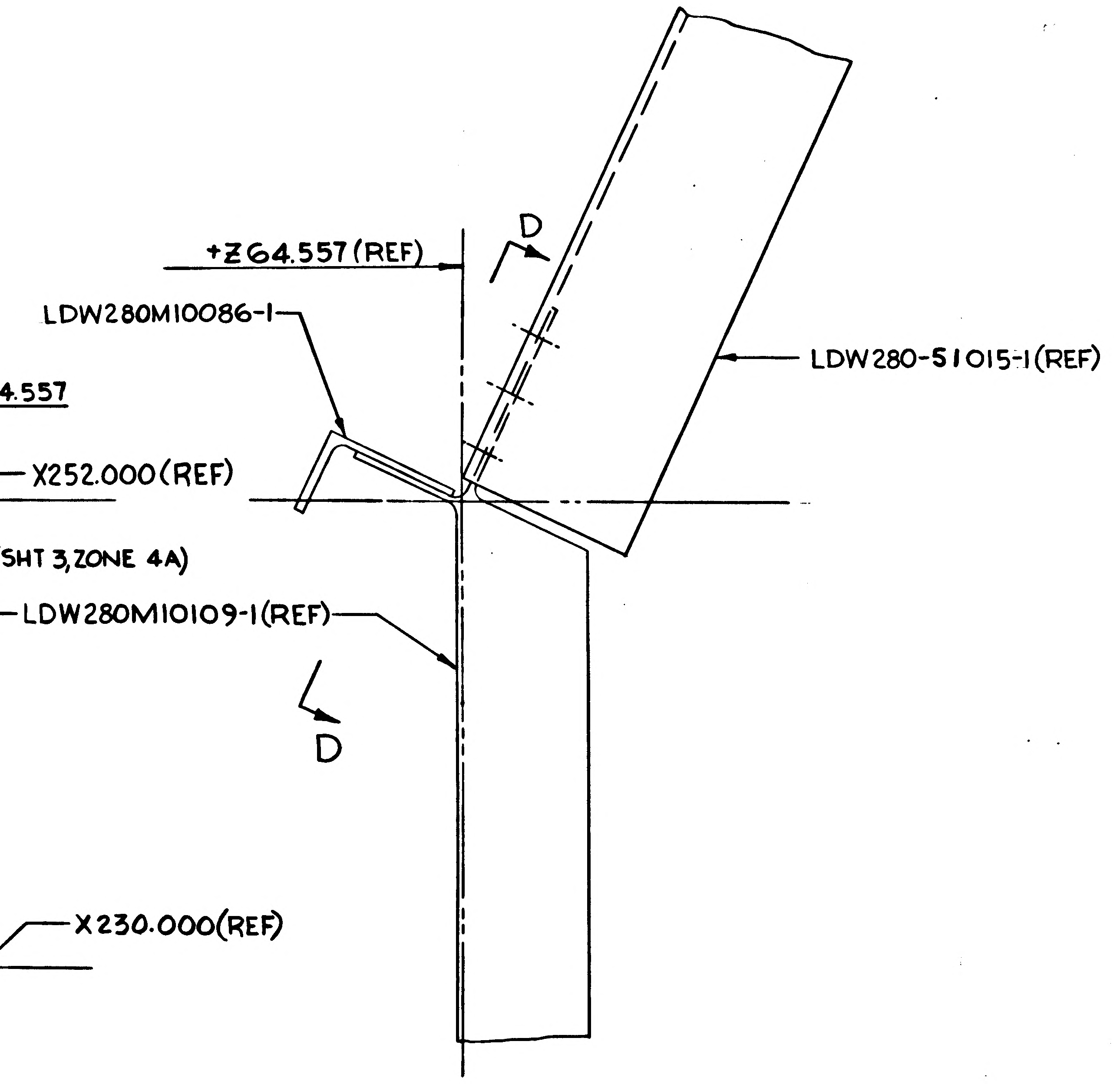
+Z64.557 (REF)
LDW280M10086-1
D
LDW280-51015-1(REF)
LDW280M10109-1(REF)
D

VIEW C-C
SCALE: FULL

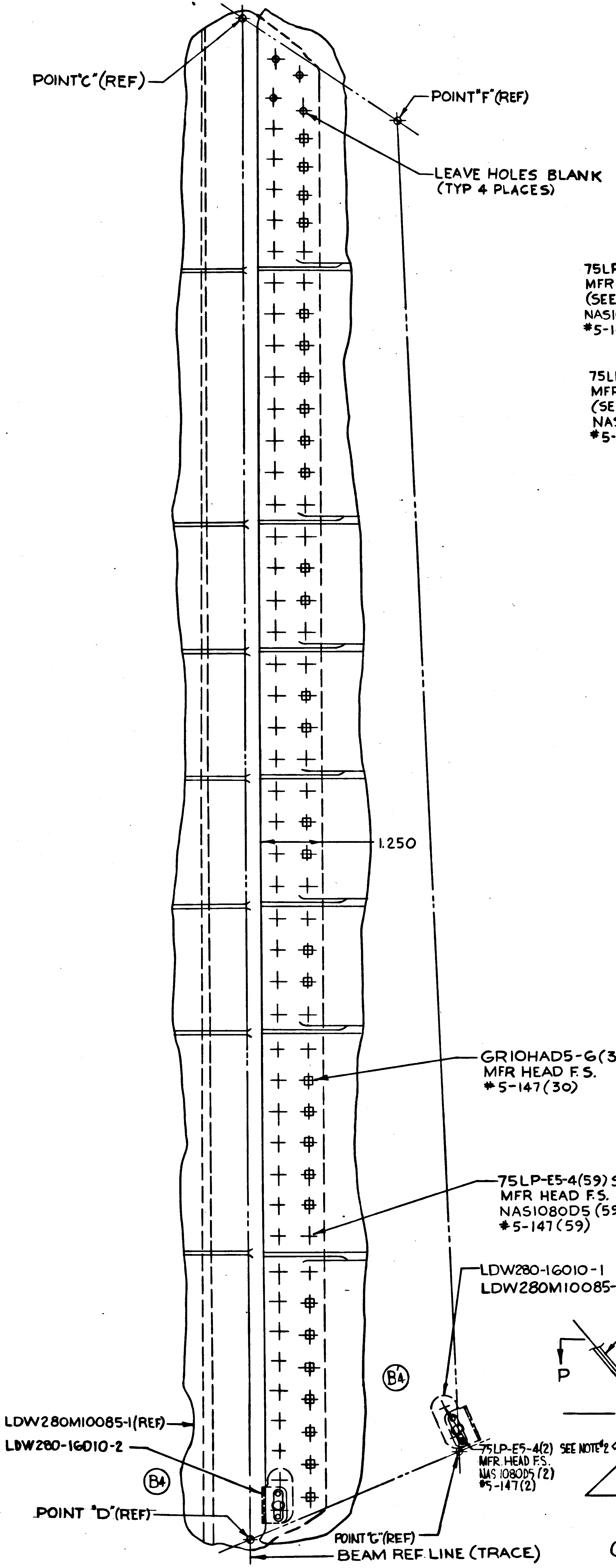
POINT "C" (REF)
POINT "F" (REF)
LEAVE HOLES BLANK (TYP 4 PLACES)
1.250
GR10HAD5-6(30) MFR HEAD F.S. #5-147(30)
75LP-E5-4(59) SEE NOTE #2 MFR HEAD F.S. NAS1080D5 (59) #5-147(59)
LDW280-16010-1
LDW280M10085-1(REF)
B4
LDW280M10085-1(REF)
LDW280-16010-2
B4
75LP-E5-4(2) SEE NOTE #2 MFR HEAD F.S. NAS1080D5 (2) #5-147(2)
POINT "D" (REF)
POINT "C" (REF)
BEAM REF LINE (TRACE)

VIEW P-P (ZONE 3E)
SCALE: FULL

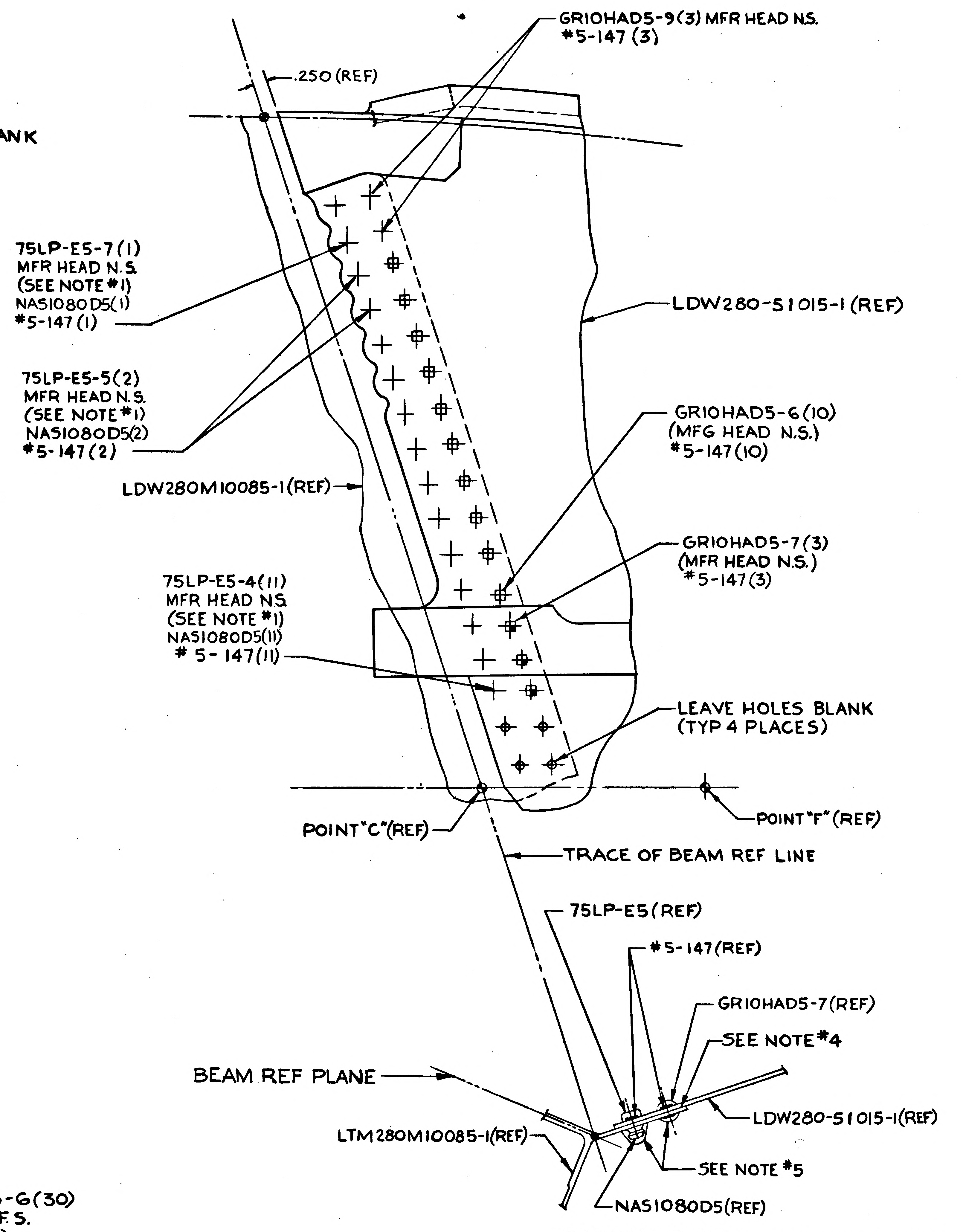
GR10HAD5-9(3) MFR HEAD N.S. #5-147 (3)
.250 (REF)
75LP-E5-7(1) MFR HEAD N.S. (SEE NOTE #1) NAS1080D5(1) #5-147 (1)
LDW280-51015-1 (REF)
75LP-E5-5(2) MFR HEAD N.S. (SEE NOTE #1) NAS1080D5(2) #5-147(2)
GR10HAD5-6(10) (MFG HEAD N.S.) #5-147(10)
LDW280M10085-1(REF)
GR10HAD5-7(3) (MFR HEAD N.S.) #5-147(3)
75LP-E5-4(11) MFR HEAD N.S. (SEE NOTE #1) NAS1080D5(11) # 5-147(11)
LEAVE HOLES BLANK (TYP 4 PLACES)
POINT "C" (REF)
POINT "F" (REF)
TRACE OF BEAM REF LINE
75LP-E5(REF)
#5-147(REF)
GR10HAD5-7(REF)
SEE NOTE #4
BEAM REF PLANE
LDW280-51015-1(REF)
LTM280M10085-1(REF)
SEE NOTE #5
NAS1080D5(REF)

SECTION R-R (ZONE 8H) (SHOWN) LH SIDE
SCALE: FULL (OPP) RH SIDE

03/04 NAS 9-1100

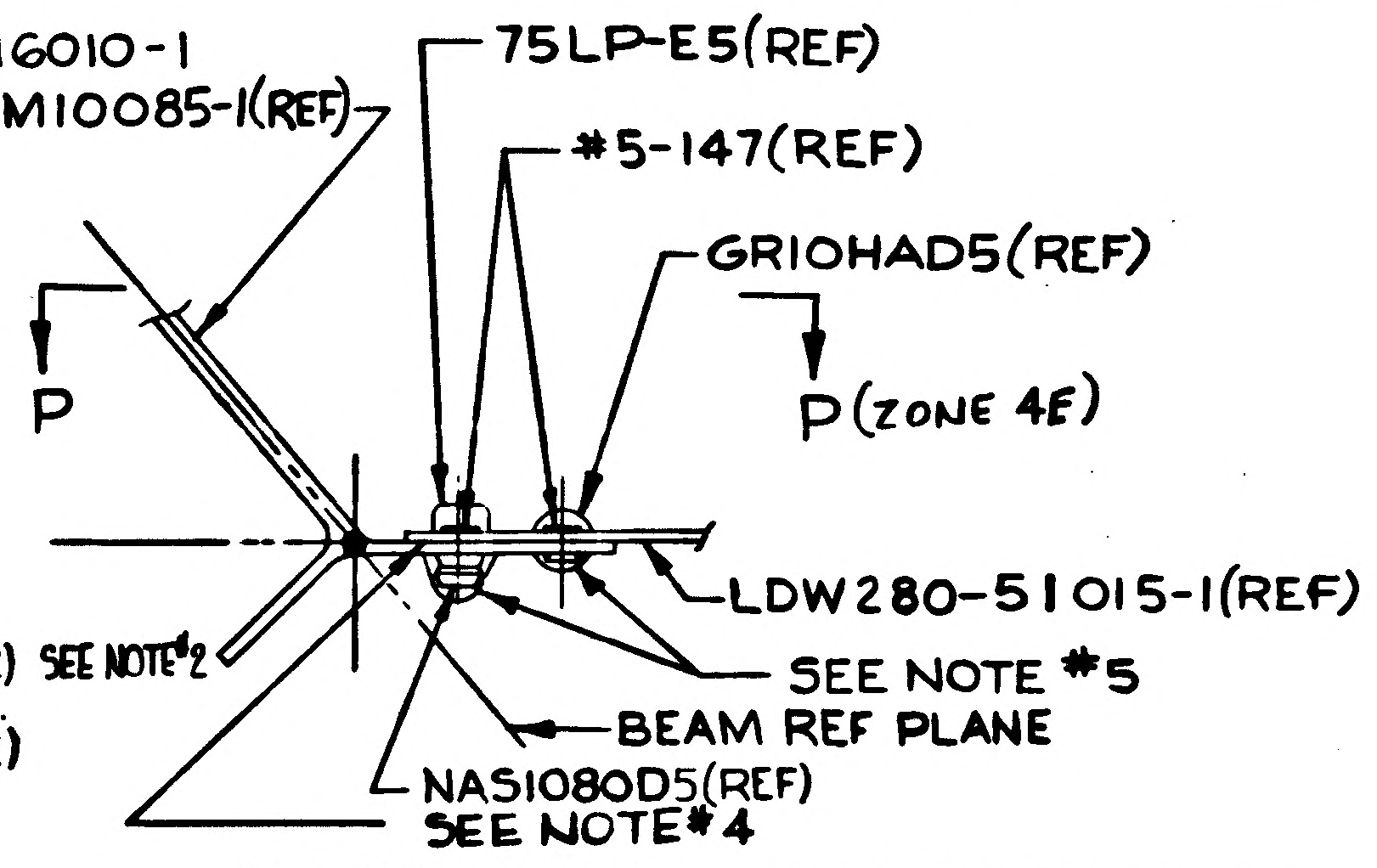
75LP-E5(REF)
#5-147(REF)
GR10HAD5(REF)
P
P (ZONE 4E)
LDW280-51015-1(REF)
SEE NOTE #5
BEAM REF PLANE
NAS1080D5(REF)
SEE NOTE #4

SECTION S-S (ZONE 8G) (SHOWN) LH SIDE
SCALE: FULL (OPP) RH SIDE
(ROTATED CW 20°)

CODE IDENT NO 26512
LDW280-52011 SHEET 4

CODE IDENT NO.26512
LDW280-52011 SHEET 4

LEM

MP
D.F.

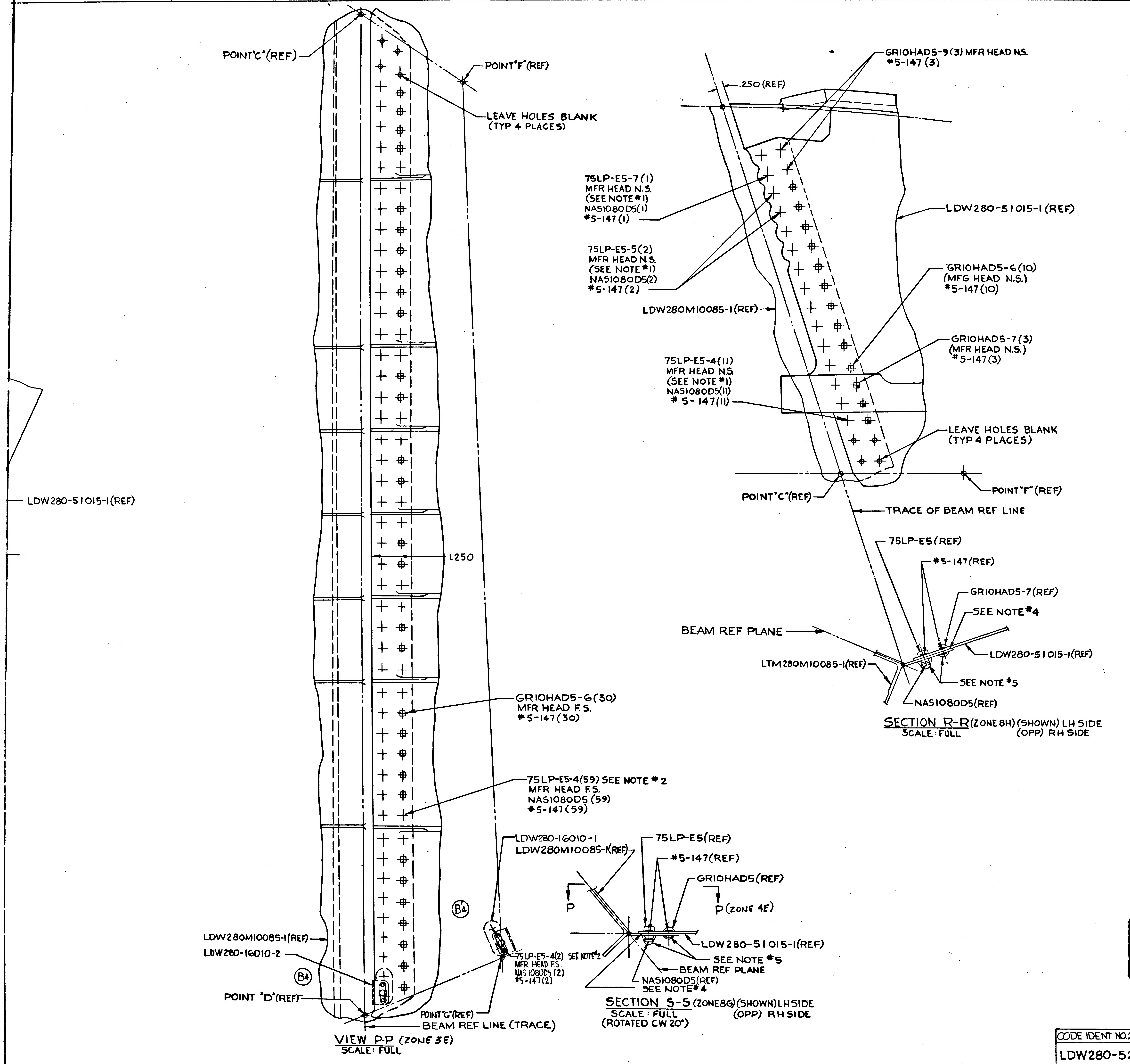
4
3
2
1
5
H
G
F
E
POINT "C" (REF)
POINT "F" (REF)
LEAVE HOLES BLANK
(TYP 4 PLACES)
LDW280-51015-1(REF)
1.250
GR10HAD5-6(30)
MFR HEAD F.S.
#5-147(30)
75LP-E5-4(59) SEE NOTE #2
MFR HEAD F.S.
NAS1080D5 (59)
#5-147(59)
LDW280-16010-1
LDW280M10085-1(REF)
B4
B4
LDW280M10085-1(REF)
LDW280-16010-2
POINT "D"(REF)
POINT "G"(REF)
BEAM REF LINE (TRACE)
75LP-E5-4(2) SEE NOTE #2
MFR HEAD F.S.
NAS 1080D5 (2)
#5-147(2)
GR10HAD5-9(3) MFR HEAD N.S.
#5-147 (3)
.250 (REF)
75LP-E5-7(1)
MFR HEAD N.S.
(SEE NOTE #1)
NAS1080D5(1)
#5-147 (1)
75LP-E5-5(2)
MFR HEAD N.S.
(SEE NOTE #1)
NAS1080D5(2)
#5-147 (2)
LDW280M10085-1(REF)
LDW280-51015-1(REF)
GR10HAD5-6(10)
(MFG HEAD N.S.)
#5-147(10)
GR10HAD5-7(3)
(MFR HEAD N.S.)
#5-147(3)
75LP-E5-4(11)
MFR HEAD N.S.
(SEE NOTE #1)
NAS1080D5(11)
#5-147(11)
LEAVE HOLES BLANK
(TYP 4 PLACES)
POINT "C"(REF)
POINT "F" (REF)
TRACE OF BEAM REF LINE
75LP-E5(REF)
#5-147(REF)
GR10HAD5-7(REF)
SEE NOTE #4
BEAM REF PLANE
LTM280M10085-1(REF)
LDW280-51015-1(REF)
SEE NOTE #5
NAS1080D5(REF)
75LP-E5(REF)
#5-147(REF)
GR10HAD5(REF)
P
P (ZONE 4E)
LDW280-51015-1(REF)
SEE NOTE #5
BEAM REF PLANE
NAS1080D5(REF)
SEE NOTE #4

VIEW P-P (ZONE 3E)
SCALE: FULL

SECTION R-R (ZONE 8H) (SHOWN) LH SIDE
SCALE: FULL (OPP) RH SIDE

SECTION S-S (ZONE 8G) (SHOWN) LH SIDE
SCALE: FULL (OPP) RH SIDE
(ROTATED CW 20°)

~~MANUFACTURING OPERATIONS~~
~~UNLESS OTHERWISE SPECIFIED NOTES CHECKED √ APPLY TO THIS DWG.~~

~~PART NUMBER AND ALL OTHER MARKINGS IN REGION MARKED ⊠ USE BOTH SIDES IF NECESSARY.~~	
~~FILLET AND INSIDE CORNER RADII TOLERANCES~~ ~~.016R TO .062R ± .010~~ ~~.063R TO .250R ± .015~~ ~~OVER .250R ± .030~~	
~~DEPTH SHOWN FOR TAPPED HOLES IS FULL THDS. 2-3 IMP THDS. BEYOND PERMISSIBLE.~~	
~~EXTERNAL THREAD LENGTH SHOWN INCLUDES 2 IMPERFECT THREADS MAX.~~	
~~DO NOT CADMIUM PLATE & PAINT HOLES OR SURFACES MARKED WITH DOUBLE ASTERISK.~~	
~~MISMATCH STEP OF ± .005 PERMISSIBLE DUE TO CHANGE OF CUTTERS AT INSIDE INTERSECTING SURFACES.~~	
~~DIAMETERS MARKED MUST BE CONCENTRIC WITHIN FULL INDICATOR READING~~	
~~HOLES MUST BE KEPT FREE OF CHROME PLATING SOLUTION.~~	
~~ALL DIMENSIONS SHOWN TO BE MET AFTER CADMIUM PLATING. THICKNESS OF PLATE .0003 MIN. TO .0005 MAX. MIN. THICKNESS TO BE .0002 ON THREADED AREAS. NO ALLOWANCE FOR PLATING IN HOLES~~	
~~125 √ SURFACE ROUGHNESS INCLUDING REAMED HOLES PER MIL-STD-10~~	
~~200 √ FOR ALL DRILLED HOLES~~	
~~REMOVE ALL BURRS. BREAK ALL EDGES .015-.031~~	
~~INSPECTION INFORMATION MINIMUM PERMISSIBLE AVERAGE EDGE DISTANCE MARKED IS~~	
~~SYMBOL √ DENOTES SURFACE TO BE MACHINED~~	
~~UNLESS OTHERWISE SPECIFIED TOLERANCE ON FLANGES IS ± 1/32~~	
~~LENGTHS OF AN, NAS & MS AL ALY RIVETS SHORTER THAN 1 INCH ARE NOT SPECIFIED.~~	
~~TOLERANCE ON LOFTED DELINEATIONS IS~~	

DWG SIZE 34 X 142

PRINTING INFO ONLY
FULL SIZE SHEET AREA (36 X 144)= 36 SQ. FT.
1/2 SIZE SHEET AREA (1/4 OF FULL)= 9 SQ. FT.

PRINT TRIM LINE

LDW280-52011 B

LDW280-52011 B

104/014

NAS 9-1100

CODE IDENT NO.26512
LDW280-52011 SHEET 4

	GRUMMAN AIRCRAFT ENGRG CORP., BETHPAGE, L. I., NEW YORK			
LEM	SIZE J	CODE IDENT NO. 26512	LDW280-52011	B
MODEL OR END ITEM	SCALE AS NOTED		SHEET 4.00	

THIS IS AN ORIGINAL DRAWING

ENG 32.1 REV 3-65 LIAISON ENGINEERING #5

GRUMMAN AIRCRAFT ENGINEERING CORP.
CODE IDENT NO. 26512
ENGINEERING ORDER

DWG. NO. LEO 280 EO NO. 144
CONTROL INFO NO. LEM5-7584

FOR DRAWINGS LISTED BELOW
FLD+B/M LDW 280-16010-1 SHOULD BE -13
LDW 280-16010-2 SHOULD BE -14

DWG NO	CHG. NO.	DRAWING TITLE
LTM 280-25110	G5	CABIN ASSY~PRIMARY STRUCTURE-ASCENT STAGE
LDW 280-28011	D3	FRONT FACE ASSY ASCENT STAGE CABIN
LDW 280-51011	D5	FRONT FACE ASSY ASCENT STAGE CABIN
LDW 280-52011	C1	FRONT FACE ASSY ASCENT STAGE CABIN

DETAIL SPEC REQ ☐ CL II ENGRG CHG ☐ CL I ENGRG CHG ☐

5
Ⓡ GAEC EO RELEASE C
FS
7-20

REASON FOR EO: DETAIL PART NO WAS CHANGED

DESCRIPTION OF EO: LDW 280-16010-13 WAS -1, & LDW 280-16010-14 WAS -2

MODEL	PROCURING ACTIVITY NO.	GAEC UNIT NO.	SUB CONTR UNIT NO.
LEM		LTA-1(11), -8(18)	
		LEM1(31), -2(32)	

DRAWING CHANGE REQD: REVISE DWG ✓ RECORD EO
DISPOSITION OF PARTS: REWORK ✓ SCRAP

APPROVED BY				—	—	CH		
DATE	7/12/66			—	—	7-1-66	7-20	7-1-66
6-30-66	VDI	SUPPORT	RELIAB. GROUP	GROUP LEADER	STRESS GROUP	LIAISON ENGRG	PROJ ENGRG	~~GOVT~~

PRIORITY: C5
DRAWING TITLE: (SEE ABOVE)
DRAWING NO.: LEO 280
EO NO.: 144

ISSUED BY LIAISION J. GRASSIANO X3917 SECTION EQUIP LINES GROUP NO. 332 PL 35

01 NAS 9-1100

ENG 32.1 REV 3-65

LIAISON ENGINEERING #5

GRUMMAN AIRCRAFT ENGINEERING CORP.
CODE IDENT NO. 26512
ENGINEERING ORDER

DWG NO. LDW280-52011
EO NO. C2
CONTROL INFO NO. LM-5-9127

IN FLD (ON-1) SECT D-D (REF)

(ZONE 14G) 75LP-E5-6(4)
MFG HD OPP SIDE (S/B) MFG HD N.S.

(ZONE 13G) 75LP-E5-4(2)
MFG HD OPP SIDE (S/B) MFG HD N.S.

(ZONE 13G) 65172-8-6(3)
MFG HD OPP SIDE (S/B) MFG HD NS

5

DETAIL SPEC REQ		CL II ENGRG CHG		CL I ENGRG CHG	

REASON FOR EO: AT PRESENT STAGE OF INSTL UNABLE TO REVERSE HDS OF FASTENERS (RTE #05025-35)

DESCRIPTION OF EO: IN FLD (ON-1) SECT D-D REVISED LOC OF HARDWARE. MFG HD NS (WAS) MFG HD OPPSIDE

GAEC EO RELEASE: C

MODEL	EFFECTIVITY PROCURING ACTIVITY NO.	GAEC UNIT NO.	SUB CONTR UNIT NO.
LM		LM-2 (32)	

DRAWING CHANGE REQD		DISPOSITION OF PARTS	
✓		✓	
REVISE DWG	RECORD EO	REWORK	SCRAP

APPROVED BY				~	JF	CH		
DATE	9-30-66			~	9-22-66	9-21-66	9-26-66	9-22-66
9/20/66	V.D.I	~~SUPPORT~~ W/S	RELIAB. GROUP	GROUP LEADER	STRESS GROUP	LIAISON ENGRG	PROJ ENGRG	~~GOVT~~

PRIORITY	DRAWING TITLE	DRAWING NO.	EO NO.
C	FRONT FACE ASSY ASCENT STAGE - CABIN	LDW280-52011	C2

ISSUED BY LIAISON-MOREYES X6452 SECTION VDI/J. PUSATERI GROUP NO. 335 PL 35

01

NAS 9-1100

REVISIONS FOR CONTINUATION OF REVISIONS SEE SHEET 1.11

CHANGE LTR	ITEM NO.	SHEET NO.	ZONE	GRUMMAN INFO ONLY	DET SPEC	CLASS I	CLASS II	ENGRG ORDER	DESCRIPTION	EFFECTIVITY	DISPOSITION OF EXISTING PARTS		CHANGED BY AND DATE	ENGRG APPD	GOVT APPD
											REWORK	SCRAP			
A	1	1,1.10,2,2.01 2.02,3,4,5					✓	EO A1	EO. A1 INITIAL DRAWING RELEASE PARTS MADE PER E.O	LM-2 (32)	NOT	REQD	FRANK ARMANNO JR 9-29-66		
	2	1.10 & 3						EO A2	ADDED NOTE 3		✓				
	3						✓	EO A3	IN FLD: ADDED MTG HOLES DRILL NOTE TO -1 ADDED NOTE 2						
	4	1.10,2.01 & 3					✓	EO A4	FOR-1 ADDED LDW280-28123-1 & LDW280-28238-1						
B	1	1,1.10 2.01 & 3						EO B1	ON SHEET 3 ADDED GB11D-7-76(1) MS20470AD4 (2) TO LDW280-52012-1						
	2	1.10,2.02 3,4,5						EO B2	ON-1 INSTL. ADDED VIEW P-P .060 MAX SHIM DRILL #19 (.165-.171)(6), NAS1097AD4(2) MS20426AD5(1),						
	3	1.10 2.01 3 & 4						EO B3	ADDED 1 REQD OF LDW280-28497-1, 1 REQD EACH OF LDW280-28482-1 & -2, 1 REQD OF LDW280-28344-1, LDW280-28488-1,-3-5 ON LDW280-52012-1						
	4	1.10,2.01 & 3					✓	EO B4	ON-1 REPLACED LDW280-23076-3 WITH LDW280-52076-1 AND REVISED PICTURE TO AGREE						
	5	1.10 2, 2.01,2.02 & 3						EO B5	ON-1 ADDED MS21042L08(3) & LDW280-11365-11(3), ON-1 ADDED LDW280P16200-11, AN525-832R8(3) LH & RH SIDE.						
C	1	1,1.10,2,2.01 2.02,3 & 5						EO C1	TO-1 ADDED LDW280P16200-11, AN960D8(8) AN525-832R12(3) MS21042L08(3), LDW280-11365-11 (12)						
	2	1.10,2.02 & 3						EO C2	ON-1 REMOVED MS20470AD4(3), ADDED #19 HOLE (.165-.171)(3), NAS697C08(29) & MS20426AD3(53)						
	3	1.10,2.02,&4						EO C3	ON-1 MOVED GB11D-7-76(1), MS20470AD4(2)						
D	1	1,1.10 & 3						EO D1	ON-1 ADDED #19 HOLES (2)						
	2								REF EO B1 ADDED SECT W-W	NOT REQD	NOT	REQD			
	3								REF EO C1 LDW280-10956-11 SHOULD BE SHOWN IN REF.	NOT REQD	NOT	REQD			
	4								REF EO C2 REMOVED MS20470AD4(3) NOT APPLICABLE	NOT REQD	NOT	REQD			
	5								REF EO C3 ADDED SECT AG-AG ZONE 19A	NOT REQD	NOT	REQD			

CHG APPROVED

LTR	GROUP LDR	VEH DES INT	STRUCTURES	STRUCTURES	WEIGHTS	RELIABILITY
D	—					

GRUMMAN AIRCRAFT ENGRG CORP., BETHPAGE, L. I., NEW YORK

SIZE	CODE IDENT NO.		
B	26512	LDW280-52012	E
SCALE NONE			SHEET 1.10

ENG 77.16 3-66

01

NAS 9-1100

LDW280-52012 F

MODEL OR END ITEM	NEXT ASSY	MODULE OR SER NO.	REQD PER MODULE OR END ITEM
PART NO.		GAEC SCH NO.	

MODEL OR END ITEM	NEXT ASSY	MODULE OR SER NO.	REQD PER MODULE OR END ITEM
PART NO.		GAEC SCH NO.	

MODEL OR END ITEM	NEXT ASSY	MODULE OR SER NO.	REQD PER MODULE OR END ITEM
LM	LDW280-52002	LM-2(32)	1
PART NO. LDW280-52012-1		GAEC SCH NO. 32	

5

SH REV STATUS: FOR DESCRIPTION OF REV SEE SUBQ SH

SHEET	1.00	1.10	1.11	1.12	2.00	2.01	2.02	2.03	
REV	F	D	F	F	F	F	F	F	
SHEET	3.00	4.00	5.00						
REV	F	F	F						
SHEET									
REV									

LAST SECT LTR USED AJ-AJ

LAST DASH NO. USED -1

GRUMMAN REL INFO F

PRIM NO.	K(001)		
215	MP-16F 10/24/		

UNLESS OTHERWISE SPECIFIED DIMENSIONS ARE IN INCHES.
TOLERANCE UNLESS SPECIFIED
FRACTIONS - DECIMALS - ANGLES
± 1/32 ± .020 ± 1/2°

ORIG DWG AUTH
DETAIL SPEC REQUIREMENT
CLASS II ENGRG CHANGE ✓
CLASS I ENGRG CHANGE

CONTRACT NO. NAS 9-1100
LINE ITEM 1
DOCUMENTATION TYPE II

DRAWN BY F. ARMANNO 9-28-66
LAYOUT BY WHISTON
CHECKED BY 10-18-66
GR. LEADER 10/24/66
VEH. DES. INT W R BISCHOFF
STRUCTURES 10/26
STRUCTURES
WEIGHTS
RELIABILITY
PROJ ENGR R M Carbon 12-27-66
REL GROUP 12-27-66

Ⓒ GRUMMAN AIRCRAFT ENGRG CORP
BETHPAGE, L. I., NEW YORK

MID SECTION ASSEMBLY
ASCENT STAGE

SIZE B
CODE IDENT NO. 26512
LDW280-52012 F
SCALE NONE
SHEET 1.00 OF 11

ENG 77.1 12-65

01

NAS 9-1100

REVISIONS FOR CONTINUATION OF REVISIONS SEE SHEET 1.12

CHANGE LTR	ITEM NO.	SHEET NO.	ZONE	GRUMMAN INFO ONLY	DET SPEC	CLASS I	CLASS II	ENGRG ORDER	DESCRIPTION	EFFECTIVITY	DISPOSITION OF EXISTING PARTS REWORK	DISPOSITION OF EXISTING PARTS SCRAP	CHANGED BY AND DATE	ENGRG APPD	[illegible] APPD
D	6								SHEET 1 OF 9 WAS 1 OF 8 ADDED SHEET 1.11	NOT REQD	NOT	REQD	ARMANDO 9-29-66	10-26-66	
	7								REF EO A4 REMOVED LDW280-28238-1 & LDW280-28123-1	NOT REQD					
	8								REF EO A3 ADDED MAXIMUM FASTENER DIA (.3745)	NOT REQD	NOT	REQD			
E	1							EO E1	ADDED LDW280-51842-1 & -2 TO FLD & B/M	LM-2	-1		P. CARSTENSEN 12-14-66 EG	12/22/66	12/20/66
	2	1.00, 1.11 2.00, 2.03 3.00, 4.00 & 5.00	6A & C 6A, 7B 20C, 19D 26B, 7B 22B, 6A 31C, 16B 19B, 8C						ADDED SH 2.03 IN FLD & B/M FOR-1 ADDED: LDW280-23213-1 & -2, LDW280-23251-1 & -2, LDW280-23268-5, LDW280-23280-1, LDW280-23295-1, LDW280-23296-3, LDW280-28142-1, LDW280-28172-1, LDW280-28188-1, LDW280-28208-1, LDW280-28211-1, LDW280-28216-1, LDW280-28221-1 & -2, LDW280-28245-1(2), LDW280-28253-1, LDW280-28300-1, LDW280-28304-1, LDW280-28476-1 & LDW280-52267-1 & -2. LDW280-23054-1(WAS) LDW280-28054-1,						
	3	1.11 3.00, 4.00 & 5.00	9A 5A & D 31C 18D 31A 24B					A, B, C, D, E, E	REMOVED FROM B/M LDW280-10956-11(2). IN FLD: LDW280-52012-1 ASSY (WAS) LDW280-520121-ASSY; REF CALLOUT: ±Y45.25(WAS) ±Y42.25, LDW280-52020-1(WAS) LDW280-28020-1, LDW280-52076-1(WAS) LDW280-28076-1, LDW280-28026(WAS) LDW280-28062, LDW280-52022(WAS) LDW280-28022, LDW280M10060(WAS) LDW280-10060 & LDW280M10061(WAS) LDW280-10061. ① LDW280-52012-1(WAS) LDW280-28012-1, LDW280-52144(REF)(WAS) LDW280-28144-1 & -3 FLD & B/M		NOT	REQ'D			
F	1	1.11, 2.00 & 4.00	18B					E.O. F1	ON-1, LDW280-28030-2-2 WAS -2	LM-2	✓		R. NISBET 9-26-67 S.J.		
	2	1.11, 2.00, 2.03 & 4.00 2.02	29B 9B					E.O. F2	ADDED SECT AH-AH & AJ-AJ, ON-1: ADDED LDW280-11773-11 & -13, GB511K-08-4 (2), GN512H-08(2), MS20470AD4(8) & GR500A-5D(4). ON-1 LDW280-28027-3 WAS -1.						
	3	1.11, 2.00, 3.00	5D					E.O.F3, LCD 820	ON-1: LDW280-28019-3 WAS LDW280-28019-1						
	4	1.11, 2.00 & 2.01	22A				✓	E.O.F4 LCD19-1202	ON-1 DELETED LDW280-23077-3-1 ADDED LDW280-23077-3-2 DELETED LDW280-28079-3 ADDED LDW280-28079-3-1						
	5	1.11, 2.01 & 4.00	16A 17A				✓	E.O. F5 LCD19-1244	ON-1 INSTL REMOVED LDW280-28100-1 (1 REQD), LDW280-28078-1 (1 REQD). ADDED LDW280-28100-3 (1 REQD) & LDW280-28078-3 (1 REQD).						
	6	1.11, 2.00, 4.00	25B				✓	E.O. F6	ON-1 INSTL ADDED LDW280-28030-1-2, REMOVED LDW280-28030-1						
	7	1.11, 2.01, 4.00	17A 23A			✓		E.O. F1 LCD 832A CCA 502	ON-1 LDW280-28078-3 (WAS -1), LDW280-28079-5 (WAS -1)						

CHG APPROVED

LTR	GROUP LDR	VEH DES INT	STRUCTURES	STRUCTURES	WEIGHTS	RELIABILITY
E	—	12/19/66	GW 12-19			
F						

GRUMMAN AIRCRAFT ENGRG CORP., BETHPAGE, L. I., NEW YORK

SIZE	CODE IDENT NO.		
B	26512	LDW280-52012	E
SCALE NONE		SHEET 1.11	

ENG 77.16 3-66

01

NAS 9-1100

REVISIONS

FOR CONTINUATION OF REVISIONS SEE SHEET ______

CHANGE LTR	ITEM NO.	SHEET NO.	ZONE	GRUMMAN INFO ONLY	DET SPEC	CLASS I	CLASS II	ENGRG ORDER	DESCRIPTION	EFFECTIVITY	DISPOSITION OF EXISTING PARTS		CHANGED BY AND DATE	ENGRG APPD	APPD
											REWORK	SCRAP			
F	8	1.11,1.12,2.01,4.00	23A				✓	LEO280-608	ON INCORPORATION OF E.O. F7 LDW280-28079-3-1 WAS LDW28079-5 ADDED SH 1.12	LM-2	NOT	REQD	R. NISBET 9-26-67		
	9	1.12,2.03 & 4.00	16B				✓	E.O. F9 LCD#1516	ON-1 LDW280-28253-3 WAS LDW280-28253-1		✓				
	10	1.12,2.03 & 3.00	5A				✓	E.O. F10 LCD#1752	ON-1 ADDED LDW280-53859-1						
	11	1.11 & 1.12					✓		REF E.O. F4; DELETED LDW280-23077-3 (WAS) LDW280-23077-3-1 & DELETED LDW280-28079-2 (WAS) LDW280-28079-3						
	12	1.11 & 1.12				✓		Ⓕ	REF E.O. F7 LDW280-28078-3 (WAS-1) PREVIOUSLY INCORP EOF5				S.V.		

CHG APPROVED	LTR	GROUP LDR	VEH.DES-INT.	STRUCTURES	STRUCTURES	WEIGHTS	RELIABILITY				
	F	~	10-26-67	10-23							

GRUMMAN AIRCRAFT ENGRG CORP., BETHPAGE, L. I., NEW YORK

SIZE	CODE IDENT NO.		
B	26512	LDW280-52012	F Ⓕ
SCALE NONE		SHEET 1.12	

ENG 77.16 3-66

01

NAS 9-1100

QTY PER ASSEMBLY -1	CODE IDENT	PART NO.	I&T	NOMENCLATURE OR DESCRIPTION	MATERIAL	GOVT SPEC	COML SPEC	STOCK SIZE	PROCESS SYM	FINISH NO.	ZONE
1		LDW280-28053-3	E	WATER TANK INSTL.	SEE DWG						10C
1		LDW280-28053-1		WEB INSTL.							8B
1		LDW280-28050-2		WEB INSTL.							8B
1		LDW280-28050-1									10B
1		LDW280-28044-2									18C
1		LDW280-28044-1		WEB INSTL							25C
1		LDW280-28035-3		DECK INSTL.							10C
1		LDW280-28035-1									8B
1		LDW280-28032-2									21C
1		LDW280-28032-1		DECK INSTL.							24C
1		LDW280-28030-2-2		BEAM INSTL.							19B
1		LDW280-28030-1-2		BEAM INSTL.							25B
1		LDW280-28029-3		DECK INSTL.							5D
1		LDW280-28029-1		DECK INSTL.							5A
1		LDW280-28028-2		BEAM INSTL.							19D
1		LDW280-28028-1		BEAM INSTL.							25D
1		LDW280-28027-3		DECK INSTL.							9B
1		LDW280-28019-3		STIFFENER INSTL.							5D
1		LDW280-23148-1		LINK INSTL.							9D
1		LDW280-23134-1		FITTING INSTL.							34C
1		LDW280-23122-1		SUIT CIRCUIT INSTL							17C
1		LDW280-23077-3-2		BEAM INSTL.							22A
12		LDW280-11365-11		WASHER							6B/6C
1		LDW280M10200-2		FITTING							21C
1		LDW280M10200-1		FITTING							24C
1		LDW280M10132-1		CHANNEL							10D
1		LDW280M10131-1		CHANNEL	SEE DWG						8A
		LDW280-52012-1	E	MID SECTION ASS'Y.					NONE	NONE	9A

SYM OR NO.	PROCESS OR FINISH	GRUMMAN SPEC OR MILITARY SPEC	SYM OR NO.	PROCESS OR FINISH	GRUMMAN SPEC OR MILITARY SPEC	SYM OR NO.	PROCESS OR FINISH	GRUMMAN SPEC OR MILITARY SPEC

I & T: IDENTIFICATION AND TRACEABILITY IN ACCORDANCE WITH :
NONE

GRUMMAN AIRCRAFT ENGRG CORP, BETHPAGE, L. I., NEW YORK

SIZE B
CODE IDENT NO. 26512
LDW280-52012
F Ⓕ

SCALE NONE
SHEET 2.00

ENG 77.2 7-66

01

NAS 9-1100

QTY PER ASSEMBLY -1	CODE IDENT	PART NO.	I&T	NOMENCLATURE OR DESCRIPTION	MATERIAL	GOVT SPEC	COML SPEC	STOCK SIZE	PROCESS SYM	FINISH NO.	ZONE
4		LDW280P16200-11	E	FAIRLEAD	SEE DWG						6A/7C
1		LDW280-52076-1		DROGUE SUPT.							10C
1		LDW280-52020-1		MID SECT SUB-ASSY.							18B
1		LDW280-28497-1		BRACKET INSTL.							23B
1		LDW280-28488-5									1C
1		LDW280-28488-3									4B
1		LDW280-28488-1		BRACKET INSTL.							1A
1		LDW280-28482-2		SUPPORT INSTL.							4A
1		LDW280-28482-1		SUPPORT INSTL.							4A
1		LDW280-28344-1		BRACKET INSTL.							27A
1		LDW280-28147-1		BLANKET INSTL.							8C
1		LDW280-28127-2		FITTING INSTL.							9C
1		LDW280-28127-1									9B
1		LDW280-28126-2									10C
1		LDW280-28126-1									10B
1		LDW280-28125-2									31B
1		LDW280-28125-1									31B
1		LDW280-28124-2									33B
1		LDW280-28124-1		FITTING INSTL.							33B
1		LDW280-28100-3		STIFFENER INSTL.							16A
2		LDW280-28079-3-1		BEAM INSTL.							22A/23A
1		LDW280-28078-3		BEAM INSTL.							17A
1		LDW280-52076-1		FITTING INSTL.							10C
1		LDW280-23054-1	E	FITTING INSTL.	SEE DWG						31E

SYM OR NO.	PROCESS OR FINISH	GRUMMAN SPEC OR MILITARY SPEC	SYM OR NO.	PROCESS OR FINISH	GRUMMAN SPEC OR MILITARY SPEC	SYM OR NO.	PROCESS OR FINISH	GRUMMAN SPEC OR MILITARY SPEC

I & T: IDENTIFICATION AND TRACEABILITY IN ACCORDANCE WITH : NONE

GRUMMAN AIRCRAFT ENGRG CORP, BETHPAGE, L. I., NEW YORK

SIZE	CODE IDENT NO.		
B	26512	LDW280-52012	F Ⓕ

SCALE NONE

SHEET 2.01

ENG 77.2 7-65

01

NAS 9-1100

QTY PER ASSEMBLY -1	CODE IDENT	PART NO.	I&T	NOMENCLATURE OR DESCRIPTION	MATERIAL	GOVT SPEC	COML SPEC	STOCK SIZE	PROCESS SYM	FINISH NO.	ZONE
4		GR500A-5D	E	RIVET	GRUMMAN STD						
2		GN512H-08	E	NUT							
2		GB511K-08-4	E	BOLT	GRUMMAN STD						
AS REQD				SHIM	SEE NOTE 4						
29		NAS697C08	E	NUT PLATE	STD PART						
2		NAS1097AD4		NUT PLATE							
12		MS21042L08		RIVET							
12		MS20470AD4									
1		MS20426AD5									
58		MS20426AD3		RIVET							
6		AN525-832R8		SCREW							
6		AN525-832R12		SCREW							
18		AN960D8		WASHER	STD PART						
2		GB11D-7-76	E	BRACKET	GRUMMAN STD						

SYM OR NO.	PROCESS OR FINISH	GRUMMAN SPEC OR MILITARY SPEC	SYM OR NO.	PROCESS OR FINISH	GRUMMAN SPEC OR MILITARY SPEC	SYM OR NO.	PROCESS OR FINISH	GRUMMAN SPEC OR MILITARY SPEC

I & T: IDENTIFICATION AND TRACEABILITY IN ACCORDANCE WITH : NONE

GRUMMAN AIRCRAFT ENGRG CORP, BETHPAGE, L. I., NEW YORK

SIZE B

CODE IDENT NO. 26512

LDW280-52012 F

SCALE NONE

SHEET 2.02

ENG 77.2 7-65

01

NAS 9-1100

QTY PER ASSEMBLY -1	PART NO.	I&T	CODE IDENT	NOMENCLATURE OR DESCRIPTION	MATERIAL	GOVT SPEC	COML SPEC	STOCK SIZE	PROCESS SYM	FINISH NO.	ZONE
1	LDW280-52267-2	E		BRACKET INSTL	SEE DWG						5D
1	LDW280-52267-1										6A
1	LDW280-51842-2										5C
1	LDW280-51842-1			BRACKET INSTL							5A
1	LDW280-53859-1			BRACKET INSTL							5A
1	LDW280-28476-1			SUPPORT INSTL							8C
1	LDW280-28304-1			FITTING INSTL							7C
1	LDW280-28300-1			BRACKET INSTL							5D
1	LDW280-28253-3			SUPPORT INSTL							16B
2	LDW280-28245-1			FITTING INSTL							31C
1	LDW280-28221-2			SUPPORT INSTL							6C
1	LDW280-28221-1			SUPPORT INSTL							6A
1	LDW280-11773-13			BRACKET							29B
1	LDW280-28216-1			FITTING INSTL							7B
1	LDW280-28211-1			SUPPORT INSTL							22B
1	LDW280-28208-1			CABLE INSTL							5B
1	LDW280-28188-1			FITTING INSTL							7B
1	LDW280-28172-1			BRACKET INSTL							26B
1	LDW280-28142-1			SUPPORT INSTL							5A
1	LDW280-11773-11			BRACKET							29B
1	LDW280-23296-3			SUPPORT INSTL							19D
1	LDW280-23295-1			FITTING INSTL							20C
1	LDW280-23280-1			BRACKET INSTL							25C
1	LDW280-23268-5										7B
1	LDW280-23251-2										6C
1	LDW280-23251-1										6A
1	LDW280-23213-2										6D
1	LDW280-23213-1	E		BRACKET INSTL	SEE DWG						6A

SYM OR NO.	PROCESS SYM OR FINISH NO.	GRUMMAN SPEC OR MILITARY SPEC	SYM OR NO.	PROCESS SYM OR FINISH NO.	GRUMMAN SPEC OR MILITARY SPEC	SYM OR NO.	PROCESS SYM OR FINISH NO.	GRUMMAN SPEC OR MILITARY SPEC

I & T: IDENTIFICATION AND TRACEABILITY IN ACCORDANCE WITH NONE

GRUMMAN AIRCRAFT ENGRG CORP., BETHPAGE, L. I., NEW YORK

SIZE	CODE IDENT NO.		
B	26512	LDW280-52012	F Ⓕ
SCALE NONE			SHEET 2.03

ENG 77.2 5-64

01

NAS 9-1100

01/05 NAS 9-1100

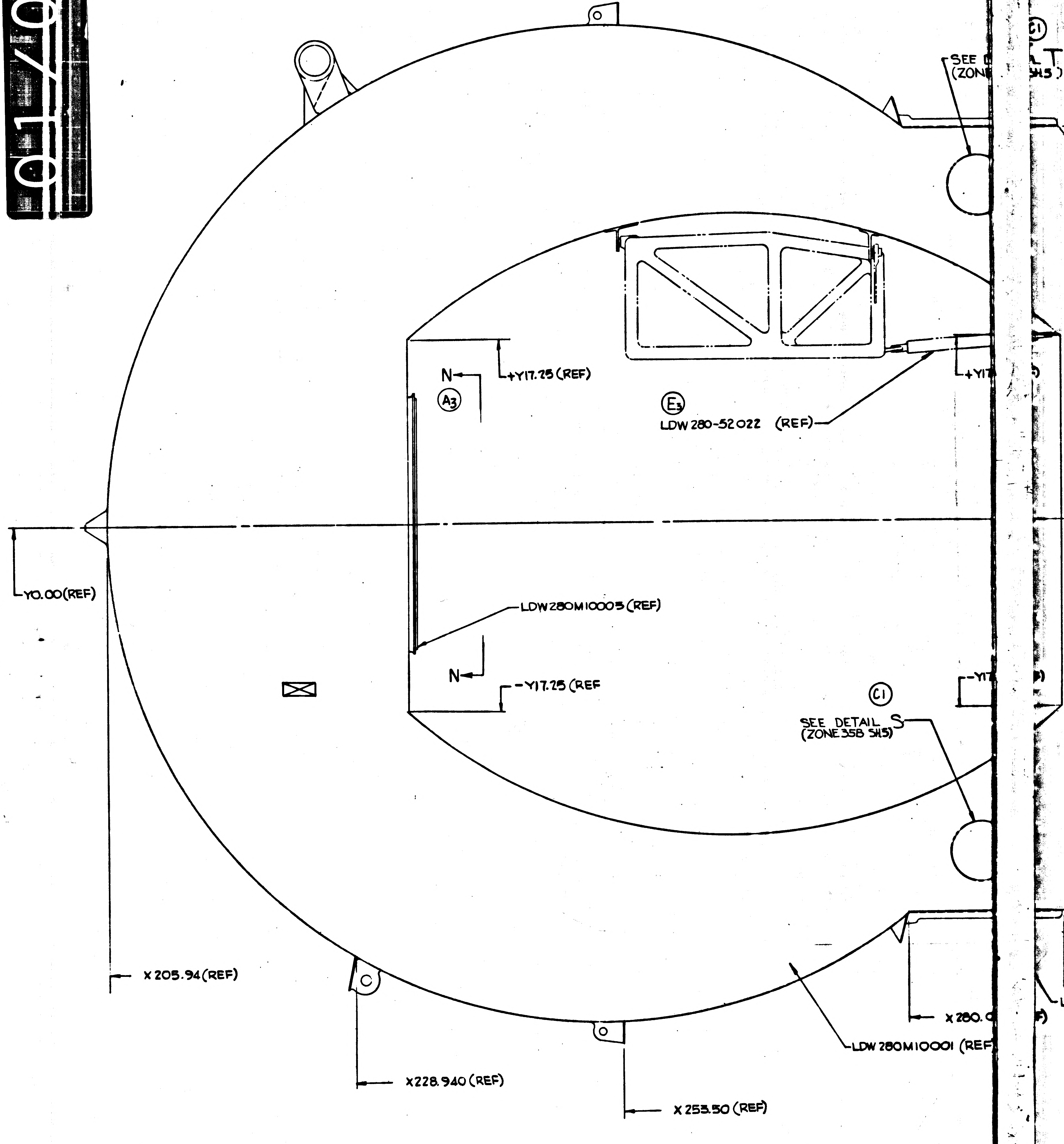
SEE DETAIL T (ZONE … SH5)
E1
+Y17.25 (REF)
N
A3
E3
LDW 280-52022 (REF)
Y0.00 (REF)
LDW280M10005 (REF)
N
-Y17.25 (REF
C1
SEE DETAIL S (ZONE 358 SH5)
C
X 205.94 (REF)
X 228.940 (REF)
X 253.50 (REF)
X 280.0
LDW 280M10001 (REF)

VIEW LOOKING AFT

5/5

CODE IDENT NO. 26512	SHT
LDW280-52012	3

02/05 NAS 9-1100

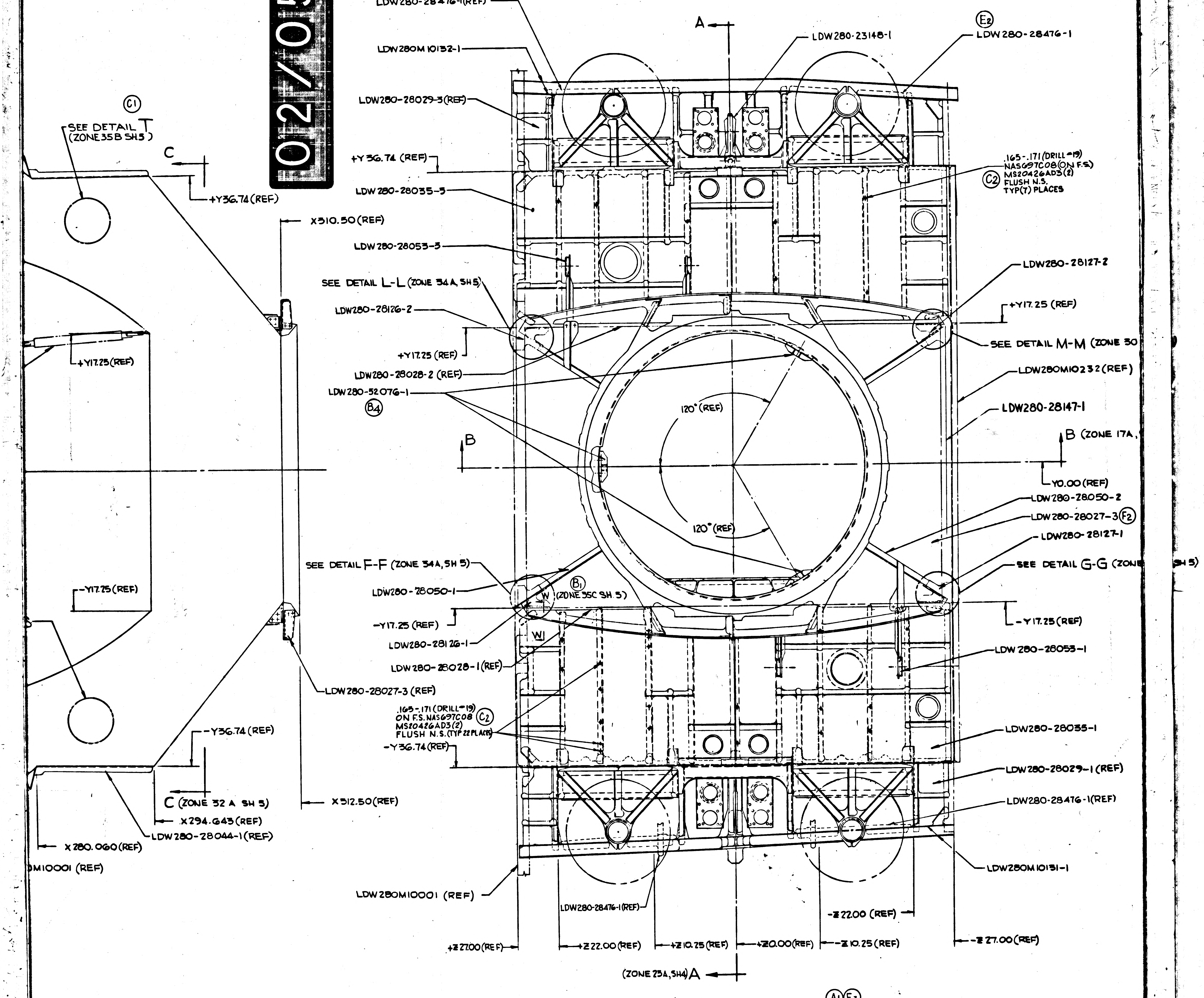
11
10
9
8
LDW280-28476-1(REF)
LDW280M10132-1
LDW280-28029-3(REF)
C1
SEE DETAIL T
(ZONE35B SH5)
C
+Y36.74 (REF)
+Y36.74 (REF)
LDW280-28035-5
X510.50(REF)
LDW280-28053-3
SEE DETAIL L-L (ZONE 34A, SH5)
LDW280-28126-2
+Y17.25(REF)
+Y17.25 (REF)
LDW280-28028-2 (REF)
LDW280-52076-1
B4
B
A
LDW280-23148-1
E2
LDW280-28476-1
.165-.171(DRILL #19)
NAS697C08(ON F.S.)
MS20426AD3(2)
C2
FLUSH N.S.
TYP(7) PLACES
LDW280-28127-2
+Y17.25 (REF)
SEE DETAIL M-M (ZONE 30
LDW280M10232(REF)
LDW280-28147-1
120° (REF)
120° (REF)
B (ZONE 17A,
Y0.00(REF)
LDW280-28050-2
LDW280-28027-3
F2
LDW280-28127-1
SEE DETAIL G-G (ZONE
SH5)
-Y17.25(REF)
-Y17.25 (REF)
SEE DETAIL F-F (ZONE 34A, SH 5)
LDW280-28050-1
B1
(ZONE 35C SH 5)
W
W1
-Y17.25 (REF)
LDW280-28126-1
LDW280-28028-1(REF)
LDW280-28027-3 (REF)
.165-.171(DRILL #19)
ON F.S. NAS697C08
MS20426AD3(2)
C2
FLUSH N.S. (TYP 22 PLACES)
-Y36.74(REF)
-Y36.74 (REF)
C (ZONE 32 A SH 5)
X294.643(REF)
X512.50(REF)
LDW280-28044-1(REF)
X280.060(REF)
M10001 (REF)
LDW280M10001 (REF)
LDW280-28053-1
LDW280-28035-1
LDW280-28029-1 (REF)
LDW280-28476-1(REF)
LDW280M10131-1
LDW280-28476-1(REF)
-Z22.00 (REF)
+Z27.00(REF)
+Z22.00(REF)
+Z10.25(REF)
+Z0.00(REF)
-Z10.25 (REF)
-Z27.00(REF)
(ZONE 25A, SH4) A

LDW280 52012-1 (ASS'Y) Ⓐ1 Ⓔ3
VIEW LOOKING DOWN

FWD

CODE IDENT NO. 26512	SHT
LDW280-52012	3

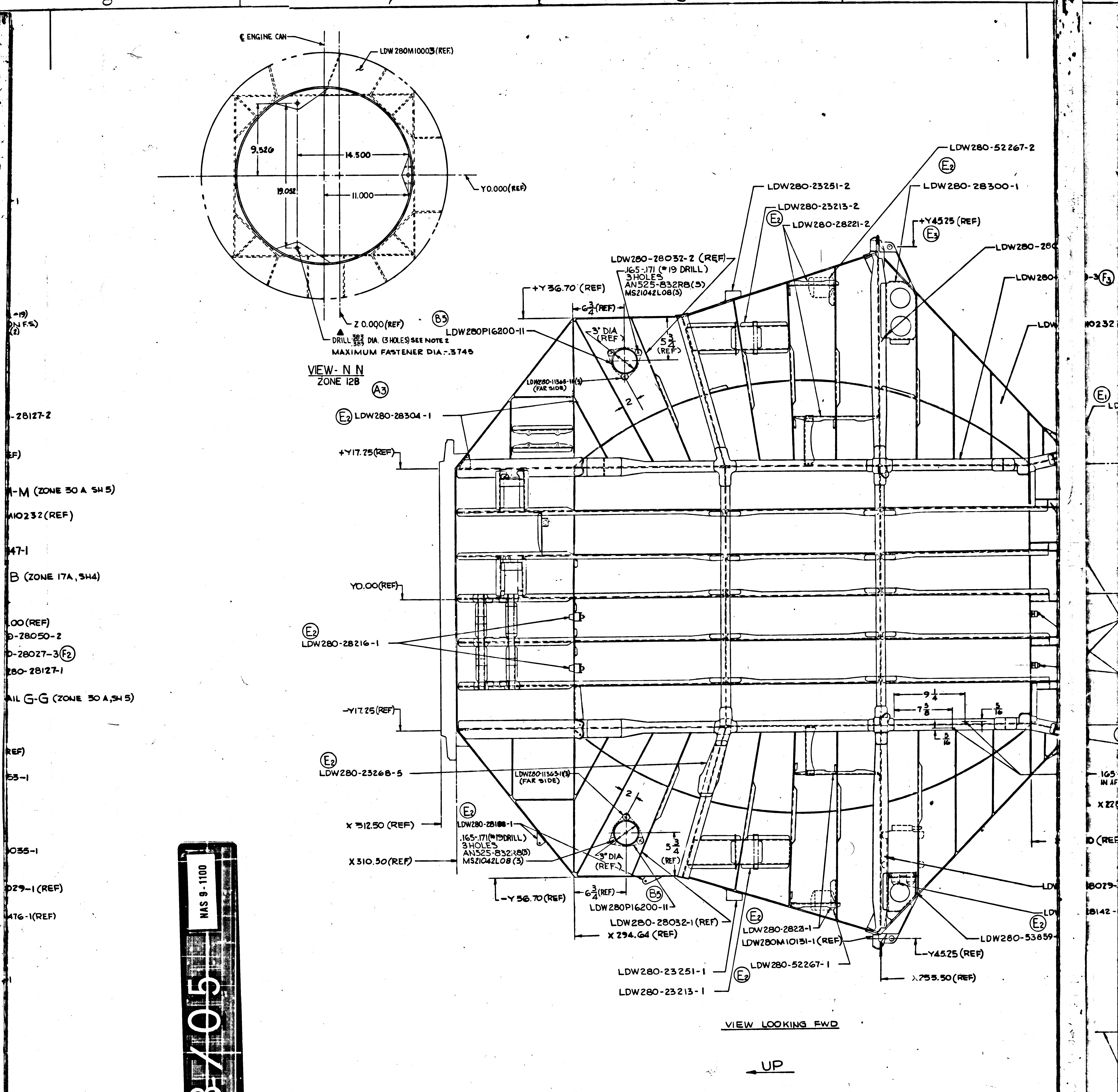
℄ ENGINE CAN
LDW280M10003(REF)
9.526
14.500
19.052
11.000
Y0.000(REF)
Z 0.000(REF)
DRILL $\frac{.383}{.385}$ DIA. (3 HOLES) SEE NOTE 2
MAXIMUM FASTENER DIA .3745
B5
VIEW- N N
ZONE 12B
A3
LDW280-52267-2
E2
LDW280-23251-2
LDW280-28300-1
LDW280-23213-2
E2
LDW280-28221-2
+Y45.25 (REF)
E3
LDW280-28032-2 (REF)
.165-.171 (#19 DRILL)
3 HOLES
AN525-832R8(3)
MS21042L08(3)
+Y36.70 (REF)
6 3/4 (REF)
3" DIA (REF)
5 3/4 (REF)
2
LDW280P16200-11
LDW280-11365-11(3) (FAR SIDE)
E2 LDW280-28304-1
+Y17.25(REF)
Y0.00(REF)
E2
LDW280-28216-1
-Y17.25(REF)
9 1/4
7 3/8
5/16
3/16
E2
LDW280-23268-5
LDW280-11365-11(3) (FAR SIDE)
2
E2
LDW280-28188-1
.165-.171 (#19 DRILL)
3 HOLES
AN525-832R8(3)
MS21042L08(3)
X 312.50 (REF)
X310.50(REF)
3" DIA (REF.)
5 3/4 (REF)
-Y36.70(REF)
6 3/4 (REF)
B5
LDW280P16200-11
LDW280-28032-1 (REF)
X 294.64 (REF)
E2
LDW280-28221-1
LDW280M10131-1 (REF)
LDW280-52267-1
E2
LDW280-23251-1
LDW280-23213-1
-Y45.25 (REF)
X755.50 (REF)
E2
LDW280-53859
LDW280-26
LDW280-
LDW
-3 F3
10232
E1
LD
165
IN AF
X 22
D (REF
LDW
8029
LDW
8142
-19)
ON F.S)
(2)
-28127-2
EF)
-M (ZONE 30 A SH 5)
M10232(REF)
47-1
B (ZONE 17A, SH4)
.00(REF)
0-28050-2
0-28027-3 F2
280-28127-1
AIL G-G (ZONE 30 A, SH 5)
REF)
53-1
035-1
029-1 (REF)
476-1(REF)
UP

VIEW LOOKING FWD

03/05

NAS 9-1100

CODE IDENT NO. 26512	SHT
LDW280-52012	3

	SHT
2	3

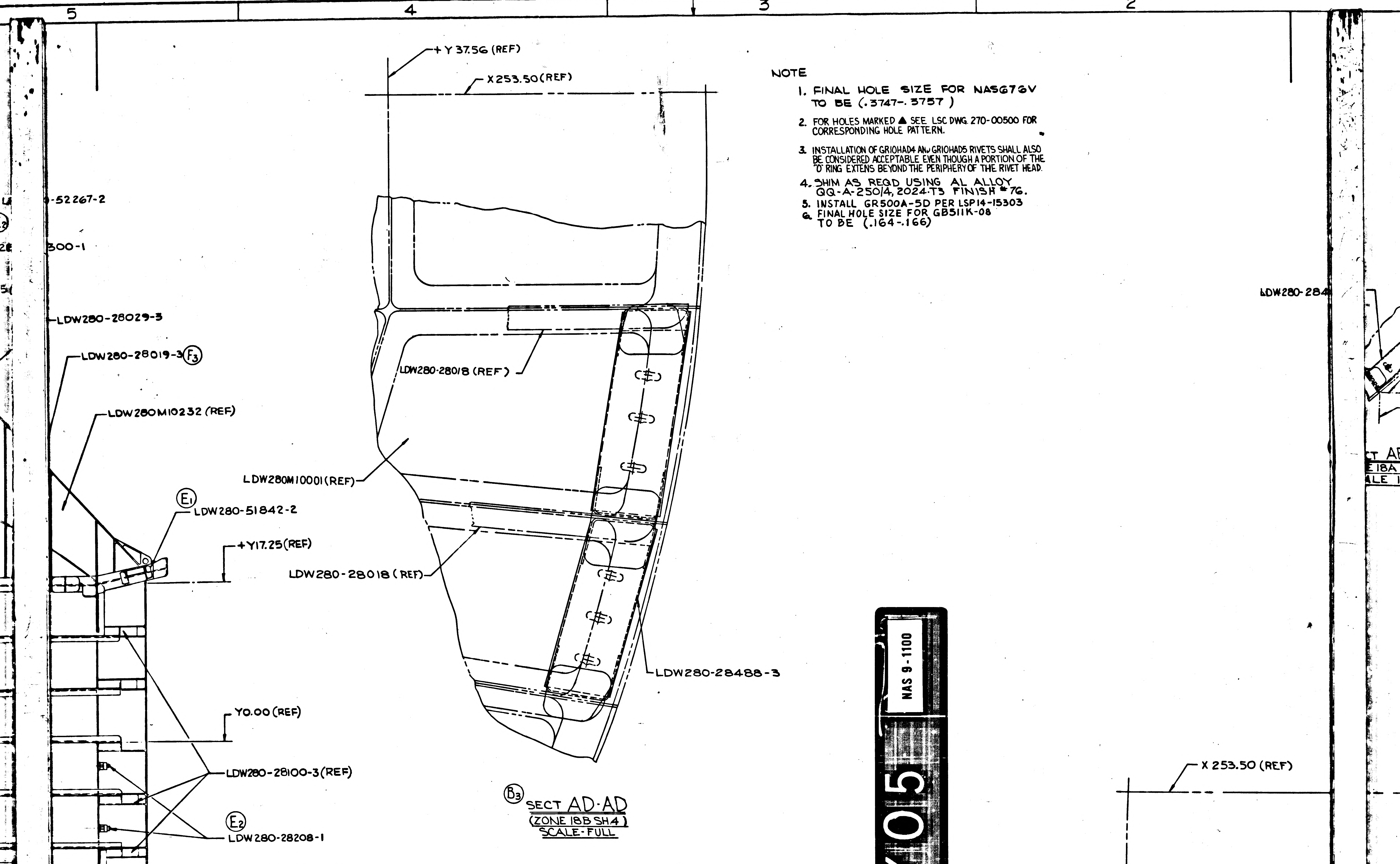

5
4
3
2
+Y 37.56 (REF)
X 253.50 (REF)
-52267-2
300-1
LDW280-28029-3
LDW280-28019-3 (F3)
LDW280M10232 (REF)
LDW280-28018 (REF)
LDW280M10001 (REF)
(E1) LDW280-51842-2
+Y17.25 (REF)
LDW280-28018 (REF)
LDW280-28488-3
Y0.00 (REF)
LDW280-28100-3 (REF)
(E2) LDW280-28208-1
-Y17.25 (REF)
5/16
(E1) LDW280-51842-1
.165-.171 (DRILL #19) (2) IN AFT FLANGE (D1)
X 228.00 (REF)
X 253.50 (REF)
LDW280-28029-1
(E2) LDW280-28142-1
W280-53859-1 (F10)
(B3) SECT AD-AD
(ZONE 18B SH.4)
SCALE-FULL
LDW280-28482-1 (SHOWN)
-2 (OPP)
-Y 36.700 (REF)
LDW280M10232 (REF)
+X 294.643 (REF)
(B3) SECT AB-AB
(ZONE 25D SH.4)
SCALE-FULL
X 253.50 (REF)
LDW280-28488-1
LDW280-28
LDW28
018 (R
LDW280-284
(B3) SECT AC
(ZONE SH.4)
SCAL

NOTE

1. FINAL HOLE SIZE FOR NAS676V TO BE (.3747-.3757)
2. FOR HOLES MARKED ▲ SEE LSC DWG. 270-00500 FOR CORRESPONDING HOLE PATTERN.
3. INSTALLATION OF GRIOHAD4 AND GRIOHAD5 RIVETS SHALL ALSO BE CONSIDERED ACCEPTABLE EVEN THOUGH A PORTION OF THE "O" RING EXTENS BEYOND THE PERIPHERY OF THE RIVET HEAD.
4. SHIM AS REQD USING AL ALLOY QQ-A-250/4, 2024-T3 FINISH #76.
5. INSTALL GR500A-5D PER LSP14-15303
6. FINAL HOLE SIZE FOR GB511K-08 TO BE (.164-.166)

04/05 NAS 9-1100

CODE IDENT NO. 26512	SHT
LDW280-52012	3

NOTE

1. FINAL HOLE SIZE FOR NAS676V TO BE (.3747-.3757)
2. FOR HOLES MARKED ▲ SEE LSC DWG. 270-00500 FOR CORRESPONDING HOLE PATTERN.
3. INSTALLATION OF GRIOHAD4 AND GRIOHAD5 RIVETS SHALL ALSO BE CONSIDERED ACCEPTABLE EVEN THOUGH A PORTION OF THE "O" RING EXTENS BEYOND THE PERIPHERY OF THE RIVET HEAD.
4. SHIM AS REQD USING AL ALLOY QQ-A-250/4, 2024-T3 FINISH #76.
5. INSTALL GR500A-5D PER LSP14-15303
6. FINAL HOLE SIZE FOR GB511K-08 TO BE (.164-.166)

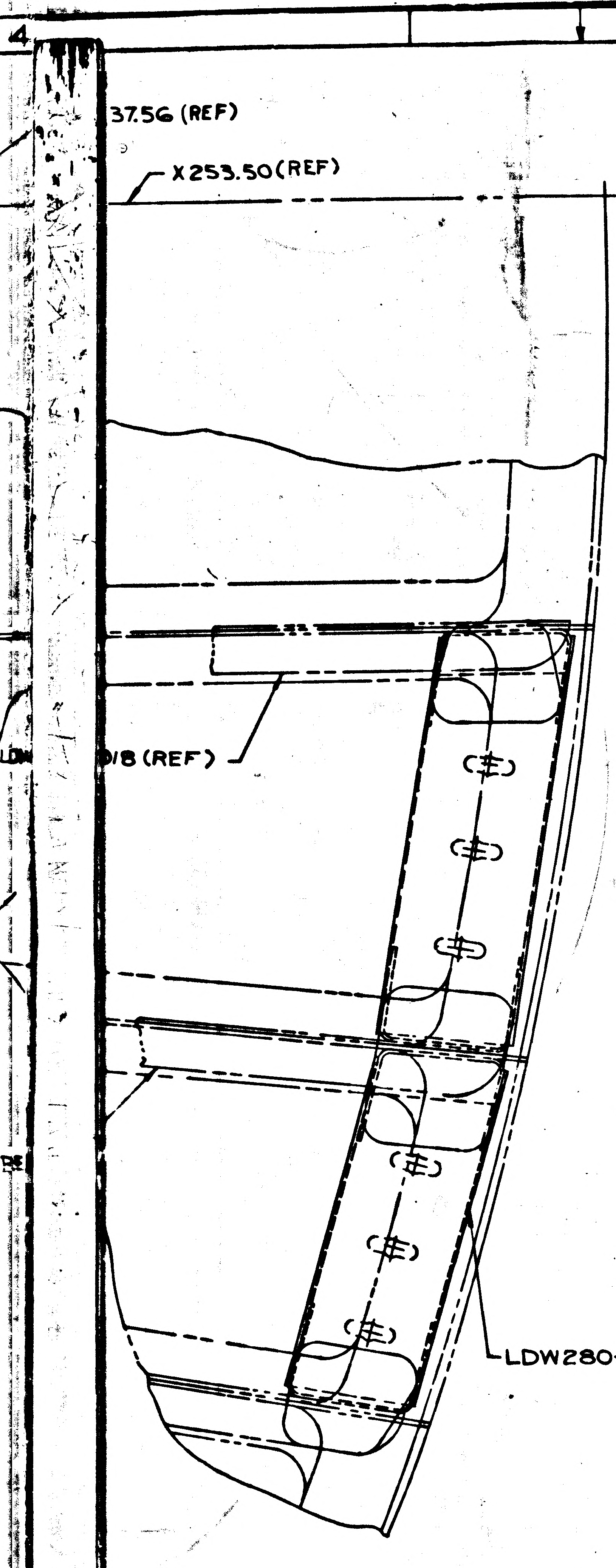

37.56 (REF)
X 253.50 (REF)
18 (REF)
LDW280-28488-3

Ⓑ3 SECT AD-AD
(ZONE 18B SH.4)
SCALE-FULL

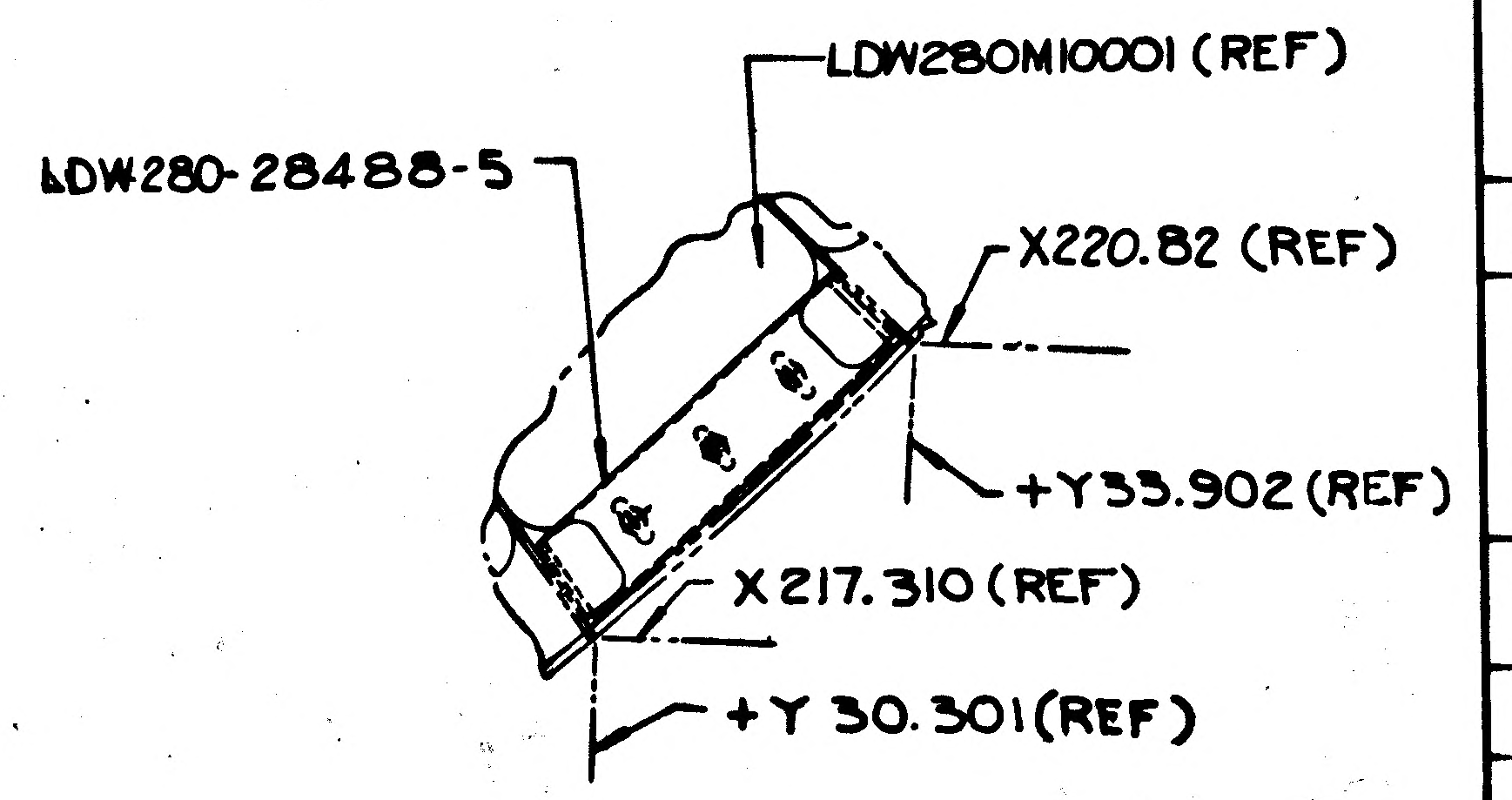

LDW280M10001 (REF)
LDW280-28488-5
X220.82 (REF)
+Y33.902 (REF)
X 217.310 (REF)
+Y 30.301 (REF)

Ⓑ3 SECT AE-AE
(ZONE 18A SH.4)
SCALE 1/2

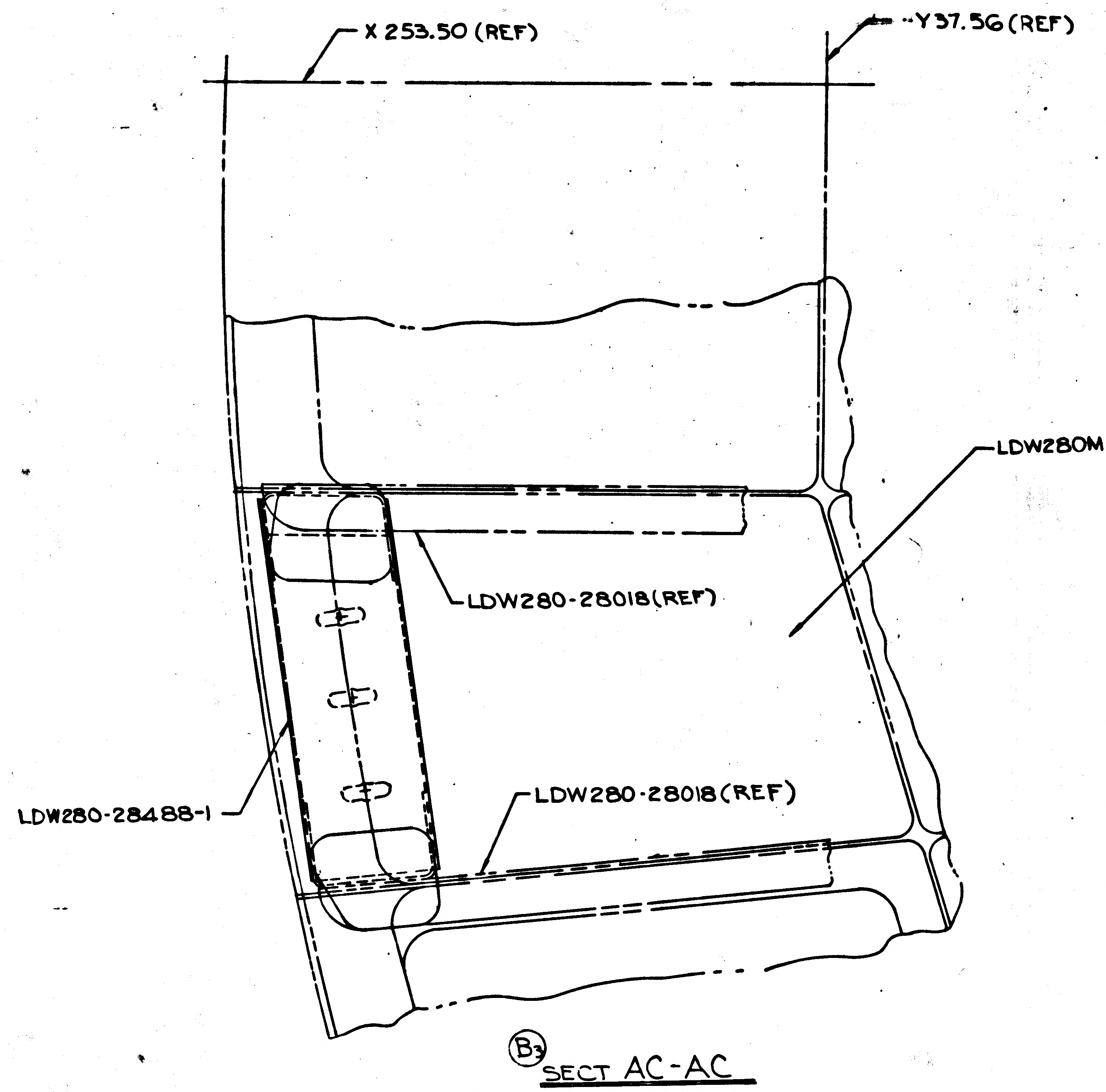

X 253.50 (REF)
-Y37.56 (REF)
LDW280M10001 (REF)
LDW280-28018 (REF)
LDW280-28488-1
LDW280-28018 (REF)

Ⓑ3 SECT AC-AC
(ZONE 26B SH.4)
SCALE - FULL

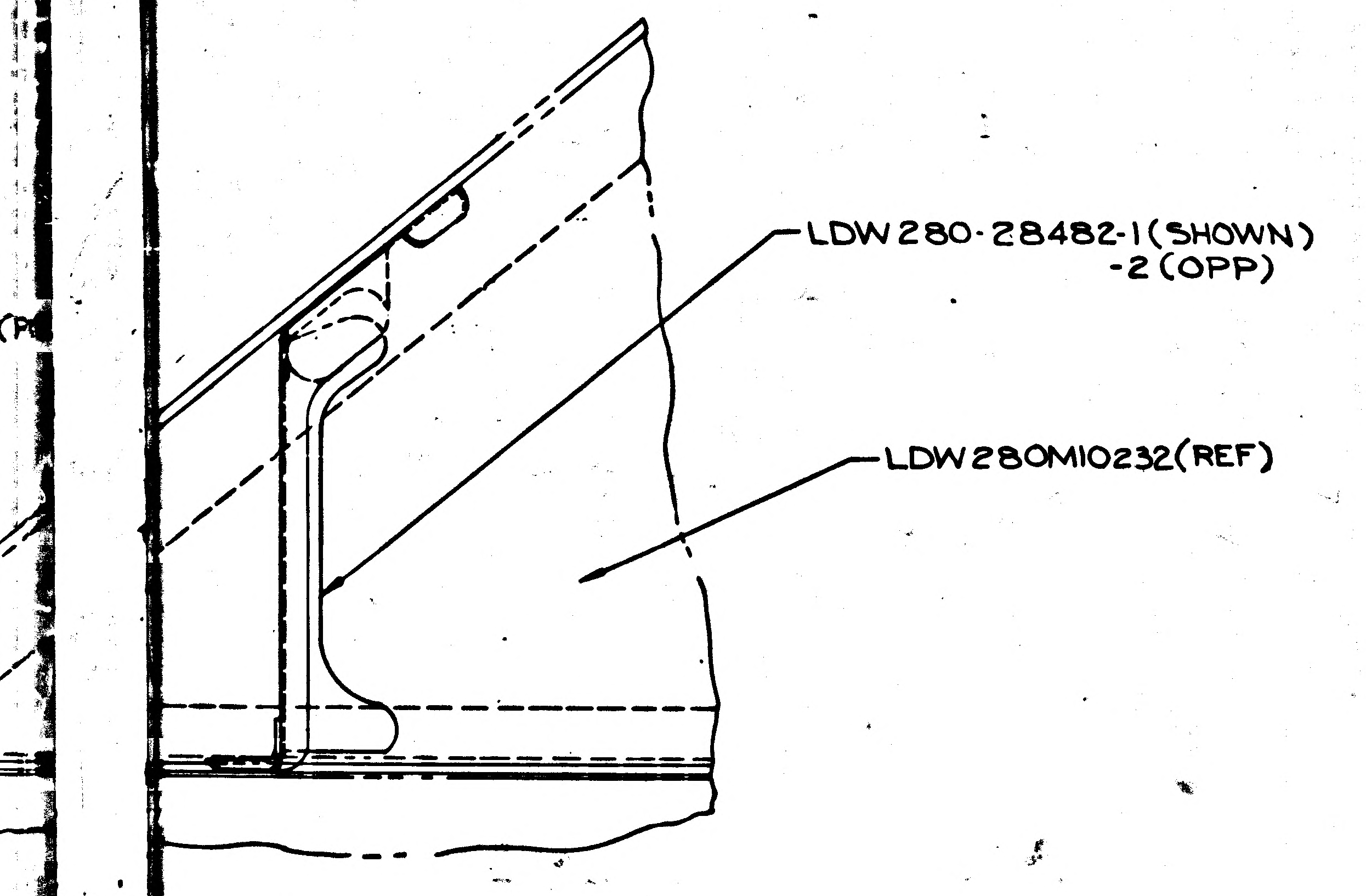

LDW280-28482-1 (SHOWN)
-2 (OPP)
LDW280M10232 (REF)

Ⓑ3 SECT AB-AB
(ZONE 25D SH.4)
SCALE-FULL

MANUFACTURING OP… …TI… UNLESS OTHERWISE SPECI… NOTES CHECKED ✓ APPLY TO TH… …WG.	
RUBBER STAMP PART NUMBER AND ALL OTHER MARKINGS IN REGION MARKED ▭ USE BOTH SIDES IF NECESSARY.	✓
FILLET AND INSIDE CORNER RADII TOLERANCES .016R TO .062R ± .010 .063R TO .250R ± .015 OVER .250R ± .030	
DEPTH SHOWN FOR TAPPED HOLES IS FULL THDS. 2-3 IMP THDS. BEYOND PERMISSIBLE.	
EXTERNAL THREAD LENGTH SHOWN INCLUDES 2 IMPERFECT THREADS MAX.	
DO NOT CADMIUM PLATE & PAINT HOLES OR SURFACES MARKED WITH DOUBLE ASTERISK.	
MISMATCH STEP OF ± .005 PERMISSIBLE DUE TO CHANGE OF CUTTERS AT INSIDE INTERSECTING SURFACES.	
DIAMETERS MARKED MUST BE CONCENTRIC WITHIN FULL INDICATOR READING	
HOLES MUST BE KEPT FREE OF CHROME PLATING SOLUTION.	
ALL DIMENSIONS SHOWN TO BE MET AFTER CADMIUM PLATING. THICKNESS OF PLATE .0003 MIN. TO .0005 MAX. MIN. THICKNESS TO BE .0002 ON THREADED AREAS. NO ALLOWANCE FOR PLATING IN HOLES	
125 ▽ SURFACE ROUGHNESS INCLUDING REAMED HOLES PER MIL-STD-10	
250 ▽ FOR ALL DRILLED HOLES	
REMOVE ALL BURRS. BREAK ALL EDGES .015-.031	
INSPECTION INFORMATION MINIMUM PERMISSIBLE AVERAGE EDGE DISTANCE MARKED IS	
SYMBOL f DENOTES SURFACE TO BE MACHINED	
UNLESS OTHERWISE SPECIFIED TOLERANCE ON FLANGES IS ± 1/32	
LENGTHS OF AN, NAS & MS AL ALY RIVETS SHORTER THAN 1 INCH ARE NOT SPECIFIED.	
TOLERANCE ON LOFTED DELINEATIONS IS	

DWG SIZE 40 X 142

PRINTING INFO ONLY

FULL SIZE SHEET AREA (41 X 144)

PRINT TRIM LINE

LDW280-52012 F

LDW28052012 F

NAS 9-1100

05/05

CODE IDENT. NO. 26512

LDW280-52012	SHT 3

GRUMMAN AIRCRAFT ENGRG CORP., BETHPAGE, L. I., NEW YORK

MODEL OR END ITEM	SIZE	CODE IDENT NO.		
LM	K	26512	LDW280-52012	F
	SCALE 1/4 & NOTED		SHEET 3.00	

Ⓕ

THIS IS AN ORIGINAL DRAWING

01/04 NAS 9-1100

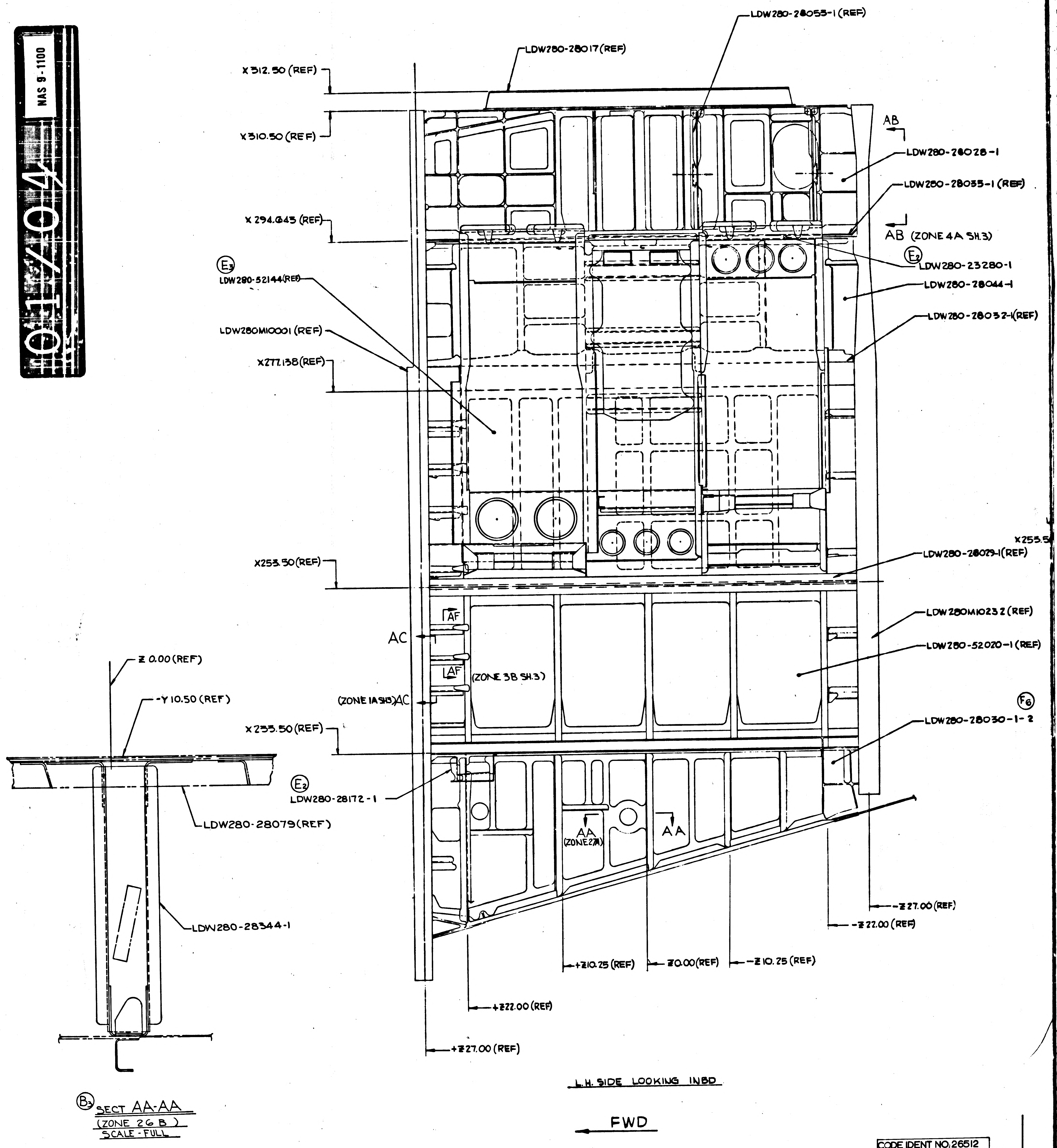

X312.50 (REF)
X310.50 (REF)
X294.645 (REF)
LDW280-52144(REF)
LDW280M10001 (REF)
X277.138(REF)
X255.50(REF)
X233.50 (REF)
LDW280-28017(REF)
LDW280-28055-1(REF)
AB
LDW280-28028-1
LDW280-28035-1 (REF)
AB (ZONE 4A SH.3)
LDW280-23280-1
LDW280-28044-1
LDW280-28032-1(REF)
LDW280-28029-1(REF)
LDW280M10232 (REF)
LDW280-52020-1 (REF)
LDW280-28030-1-2
AC
AF
AF
(ZONE 3B SH.3)
(ZONE 1A SH.3) AC
LDW280-28172-1
AA
(ZONE 2A)
AA
-Z 27.00 (REF)
-Z 22.00 (REF)
+Z10.25 (REF)
Z0.00(REF)
-Z 10.25 (REF)
+Z22.00 (REF)
+Z27.00 (REF)
Z 0.00 (REF)
-Y 10.50 (REF)
LDW280-28079(REF)
LDW280-28344-1
SECT AA-AA
(ZONE 26 B)
SCALE - FULL
L.H. SIDE LOOKING INBD
FWD

4/4

CODE IDENT NO. 26512	SHT
LDW280-52012	4

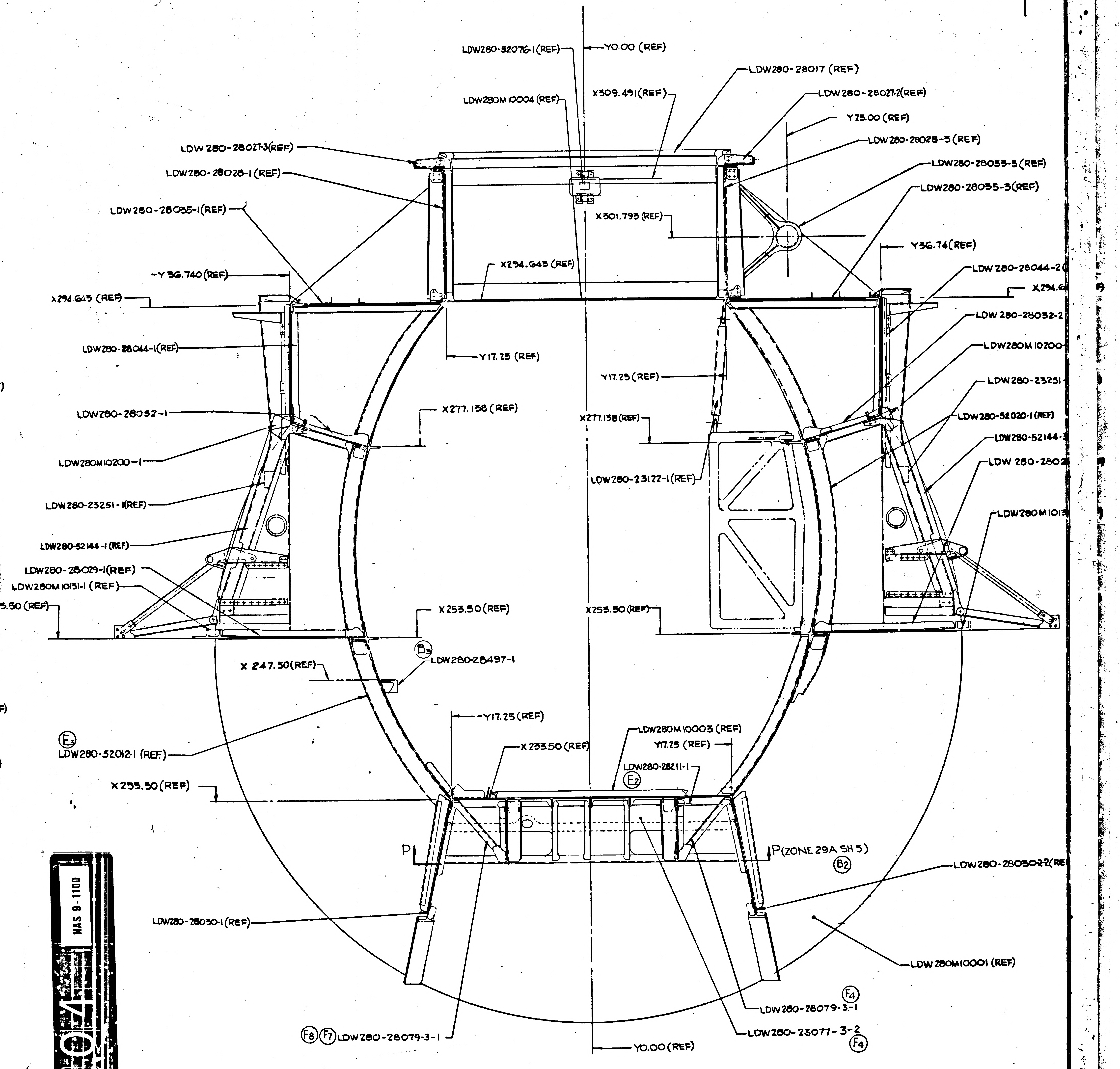
LDW280-52076-1 (REF)
Y0.00 (REF)
LDW280-28017 (REF)
LDW280M10004 (REF)
X309.491 (REF)
LDW280-28027-2 (REF)
Y25.00 (REF)
LDW280-28028-5 (REF)
LDW280-28027-3 (REF)
LDW280-28055-3 (REF)
LDW280-28028-1 (REF)
LDW280-28035-3 (REF)
LDW280-28035-1 (REF)
X301.793 (REF)
Y36.74 (REF)
X294.643 (REF)
-Y36.740 (REF)
LDW280-28044-2
X294.6
X294.643 (REF)
LDW280-28032-2
LDW280-28044-1 (REF)
Y17.25 (REF)
LDW280M10200-
Y17.25 (REF)
LDW280-23251-
LDW280-28032-1
X277.138 (REF)
X277.138 (REF)
LDW280-52020-1 (REF)
LDW280-52144-
LDW280M10200-1
LDW280-23122-1 (REF)
LDW280-280
LDW280-23251-1 (REF)
LDW280M101
LDW280-52144-1 (REF)
LDW280-28029-1 (REF)
LDW280M10131-1 (REF)
X253.50 (REF)
X253.50 (REF)
X253.50 (REF)
B3
X 247.50 (REF)
LDW280-28497-1
Y17.25 (REF)
E3
LDW280-52012-1 (REF)
LDW280M10003 (REF)
X253.50 (REF)
Y17.25 (REF)
LDW280-28211-1
X253.50 (REF)
E2
P
P (ZONE 29A SH.5)
B2
LDW280-28030-2 (RE
LDW280-28030-1 (REF)
LDW280M10001 (REF)
F4
LDW280-28079-3-1
F8 F7 LDW280-28079-3-1
LDW280-23077-3-2
F4
Y0.00 (REF)

SECT A-A (ZONE 9A, SH3)
(ROTATED CW 90°)
VIEW LOOKING FWD

02/04

NAS 9-1100

CODE IDENT. NO. 26512	SHT
LDW280-52012	4

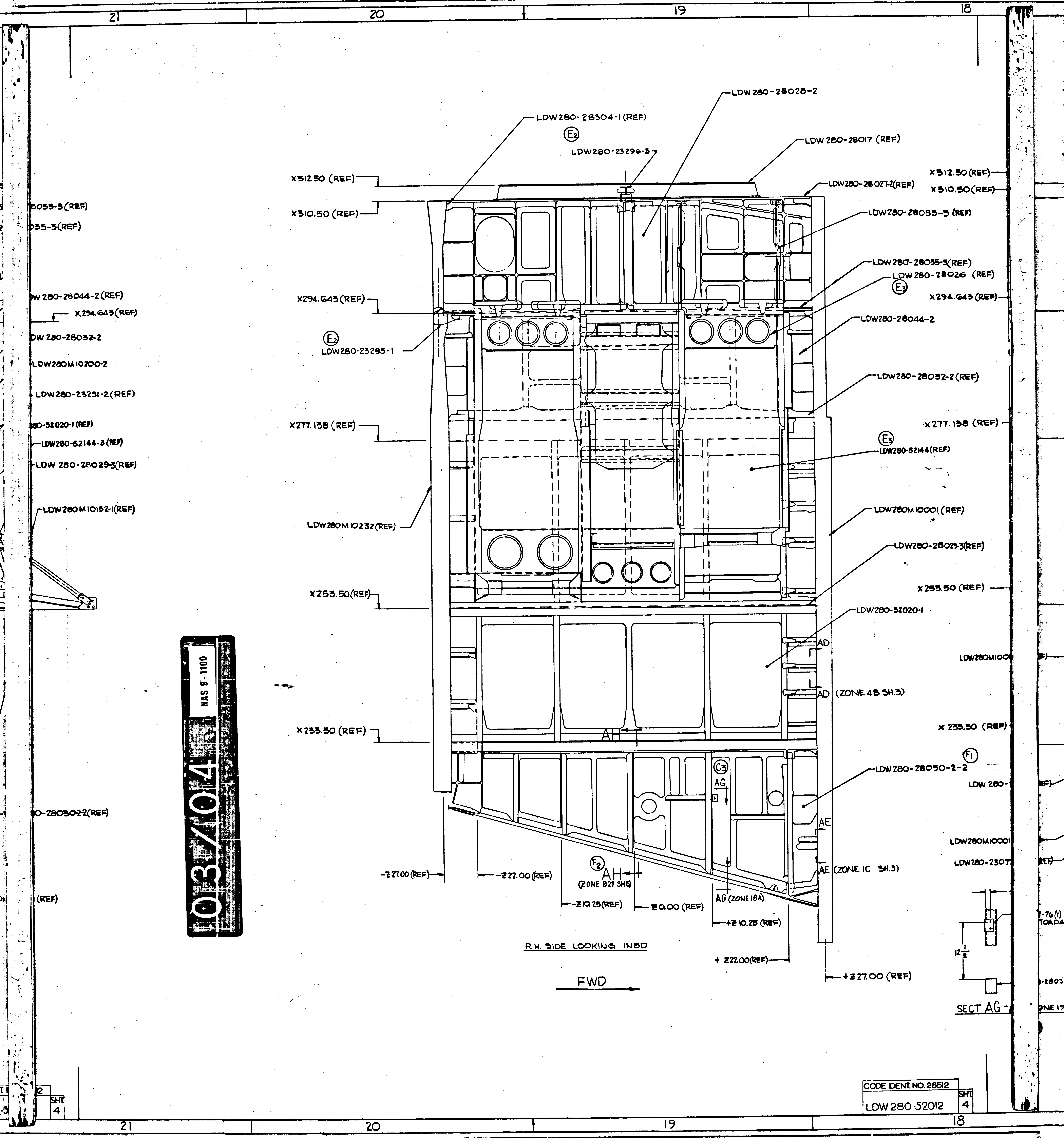
03/04
NAS 9-1100
21
20
19
18
LDW280-28304-1(REF)
(E2)
LDW280-23296-3
LDW 280-28028-2
LDW 280-28017 (REF)
LDW280-28027-2(REF)
X312.50 (REF)
X310.50 (REF)
LDW280-28055-3 (REF)
LDW280-28035-3(REF)
LDW 280-28026 (REF)
(E3)
X294.643(REF)
LDW280-28044-2
(E2)
LDW280-23295-1
LDW280-28032-2(REF)
X277.138 (REF)
(E3)
LDW280-52144(REF)
LDW280M10232(REF)
LDW280M10001 (REF)
LDW280-28029-3(REF)
X253.50(REF)
LDW280-52020-1
AD
AD (ZONE 4B SH.3)
X233.50 (REF)
AH
(F1)
LDW280-28030-2-2
(C3)
AG
AE
AE (ZONE 1C SH.3)
(F2)
AH
(ZONE B29 SH5)
-Z27.00 (REF)
-Z22.00 (REF)
-Z10.25(REF)
Z0.00 (REF)
AG (ZONE 18A)
+Z10.25 (REF)
+Z22.00(REF)
+Z27.00 (REF)
R.H. SIDE LOOKING INBD
FWD
8055-3(REF)
035-3(REF)
W 280-28044-2(REF)
X294.643(REF)
DW 280-28032-2
LDW280M10200-2
LDW280-23251-2(REF)
80-52020-1(REF)
LDW280-52144-3(REF)
LDW 280-28029-3(REF)
LDW280M10132-1(REF)
0-28030-2-2(REF)
(REF)
LDW280M100
LDW 280-
LDW280M10001
LDW280-2307
12 1/2
SECT AG-

CODE IDENT NO. 26512
LDW 280-52012
SHT 4

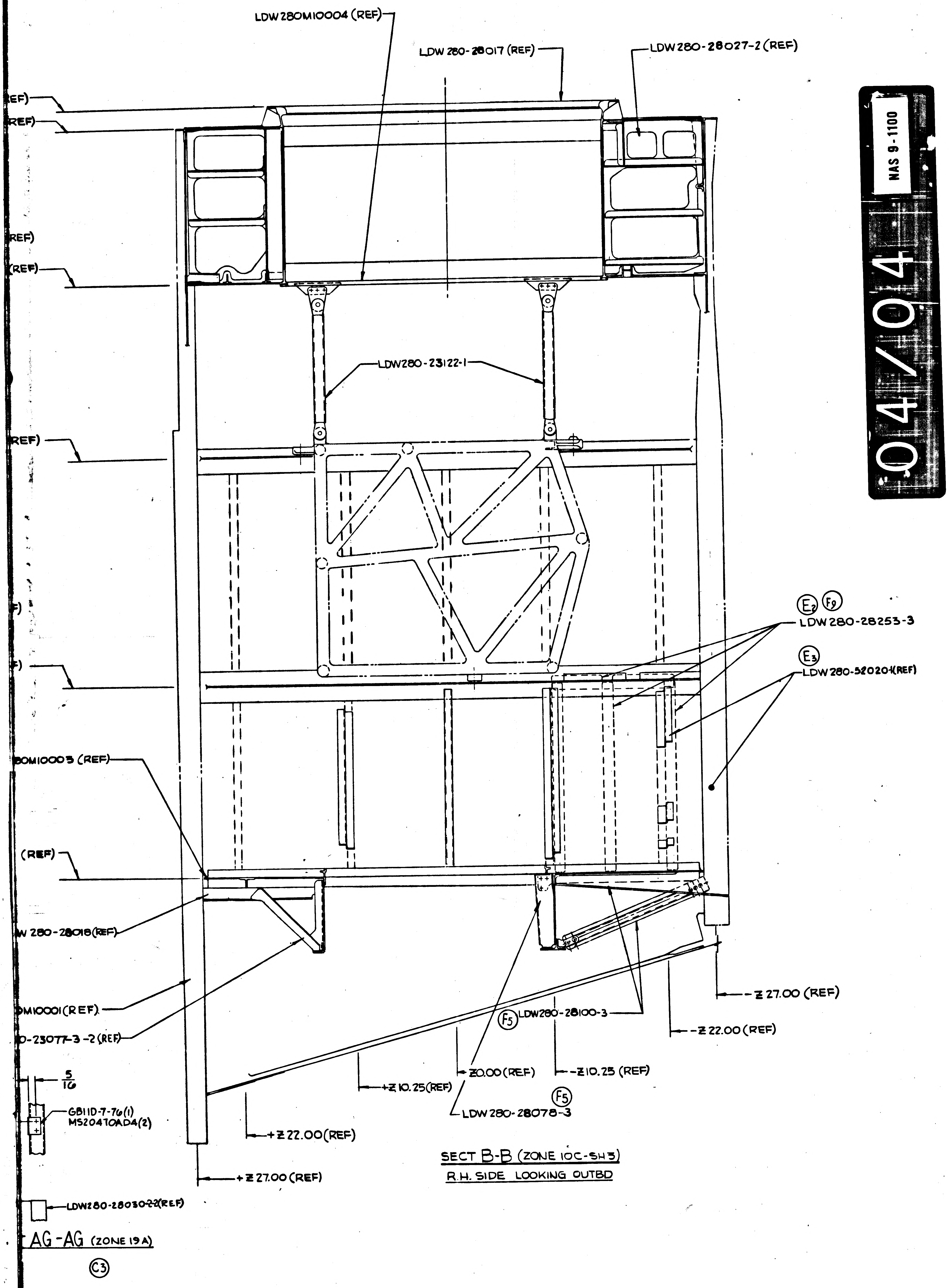
LDW280M10004 (REF)
LDW 280-28017 (REF)
LDW 280-28027-2 (REF)
LDW280-23122-1
E2 F9
LDW 280-28253-3
E3
LDW 280-520204(REF)
80M10005 (REF)
(REF)
W 280-28018(REF)
M10001(REF)
0-23077-3-2(REF)
5/16
GB11D-7-7o(1)
MS20470AD4(2)
LDW280-28030-22(REF)
AG-AG (ZONE 19A)
C3
F5
LDW280-28100-3
F5
LDW 280-28078-3
-Z 27.00 (REF)
-Z 22.00 (REF)
-Z 10.25 (REF)
Z0.00 (REF)
+Z 10.25 (REF)
+Z 22.00 (REF)
+Z 27.00 (REF)

SECT B-B (ZONE 10C-SH3)
R.H. SIDE LOOKING OUTBD

04/04 NAS 9-1100

MANUFACTURING OPERATIONS
UNLESS OTHERWISE SPECIFIED
NOTES CHECKED ✓ APPLY TO THIS DWG.

PART NUMBER AND ALL OTHER MARKINGS IN REGION MARKED ▭ USE BOTH SIDES IF NECESSARY.

FILLET AND INSIDE CORNER RADII TOLERANCES
.010R TO .062R ± .010
.063R TO .250R ± .015
OVER .250R ± .030

DEPTH SHOWN FOR TAPPED HOLES IS FULL THDS. 2-3 IMP THDS. BEYOND PERMISSIBLE.

EXTERNAL THREAD LENGTH SHOWN INCLUDES 2 IMPERFECT THREADS MAX.

DO NOT CADMIUM PLATE & PAINT HOLES OR SURFACES MARKED WITH DOUBLE ASTERISK.

MISMATCH STEP OF ± .005 PERMISSIBLE DUE TO CHANGE OF CUTTERS AT INSIDE INTERSECTING SURFACES.

DIAMETERS MARKED MUST BE CONCENTRIC WITHIN FULL INDICATOR READING

HOLES MUST BE KEPT FREE OF CHROME PLATING SOLUTION.

ALL DIMENSIONS SHOWN TO BE MET AFTER CADMIUM PLATING. THICKNESS OF PLATE .0003 MIN. TO .0005 MAX. MIN. THICKNESS TO BE .0002 ON THREADED AREAS. NO ALLOWANCE FOR PLATING IN HOLES

125 SURFACE ROUGHNESS INCLUDING REAMED HOLES PER MIL-STD-10

250 FOR ALL DRILLED HOLES

REMOVE ALL BURRS. BREAK ALL EDGES .015-.031

INSPECTION INFORMATION MINIMUM PERMISSIBLE AVERAGE EDGE DISTANCE MARKED IS

SYMBOL ƒ DENOTES SURFACE TO BE MACHINED

UNLESS OTHERWISE SPECIFIED TOLERANCE ON FLANGES IS ± 1/32

LENGTHS OF AN, NAS & MS AL ALY RIVETS SHORTER THAN 1 INCH ARE NOT SPECIFIED.

TOLERANCE ON LOFTED DELINEATIONS IS

DWG SIZE 40 X 130

LDW280-52012F

LDW280-52012F

GRUMMAN AIRCRAFT ENGRG CORP., BETHPAGE, L. I., NEW YORK

MODEL OR END ITEM	SIZE	CODE IDENT NO.		
LM	K	26512	LDW280-52012	F
	SCALE 1/4		SHEET 4.00	

(F)

THIS IS AN ORIGINAL DRAWING

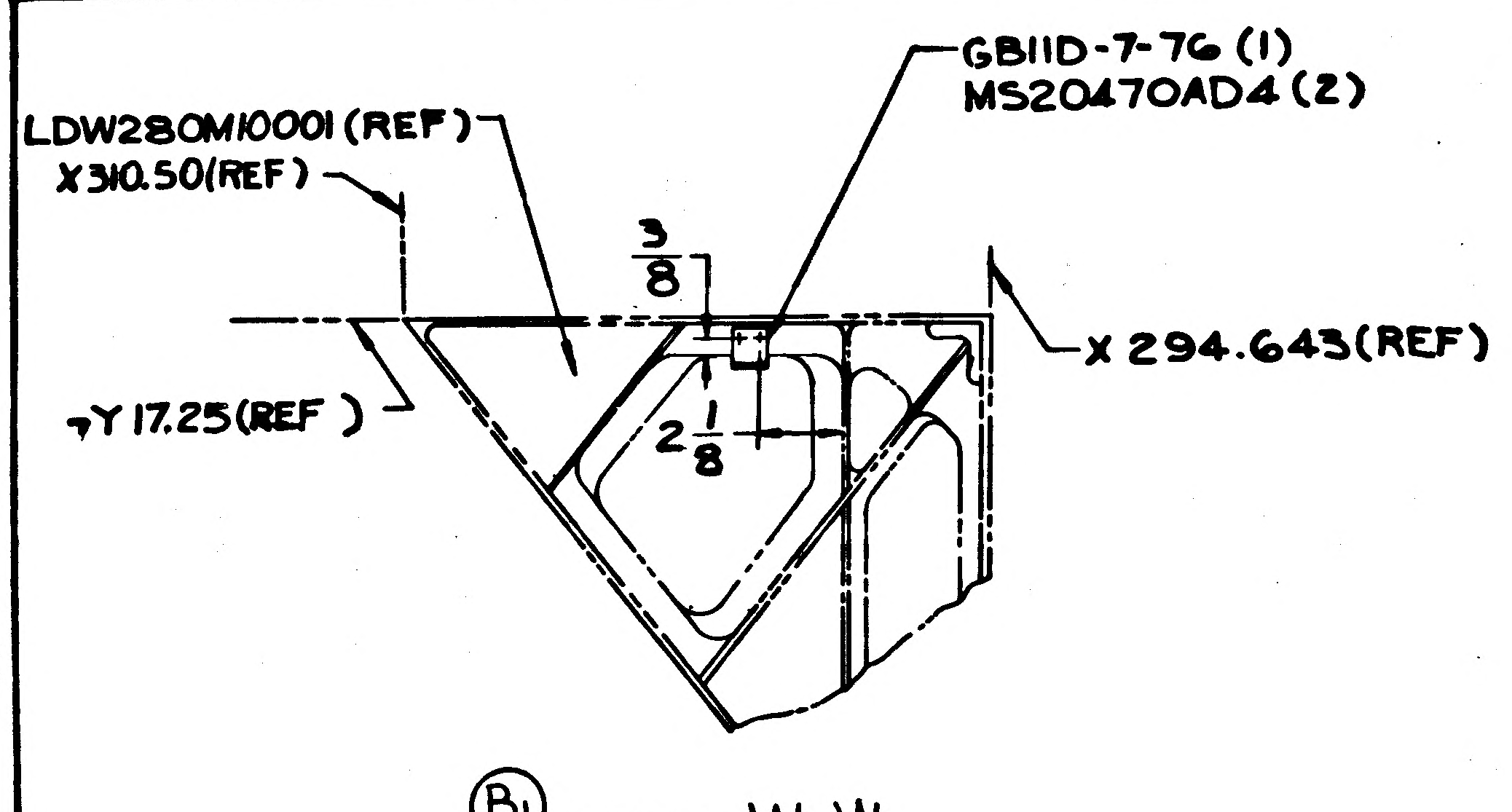

LDW280M10001 (REF)
X310.50(REF)
GB11D-7-76 (1)
MS20470AD4 (2)
3/8
2 1/8
X 294.643(REF)
Y17.25(REF)

C

Ⓑ₁ SECT W-W
ZONE 10B SH.3
SCALE: NONE

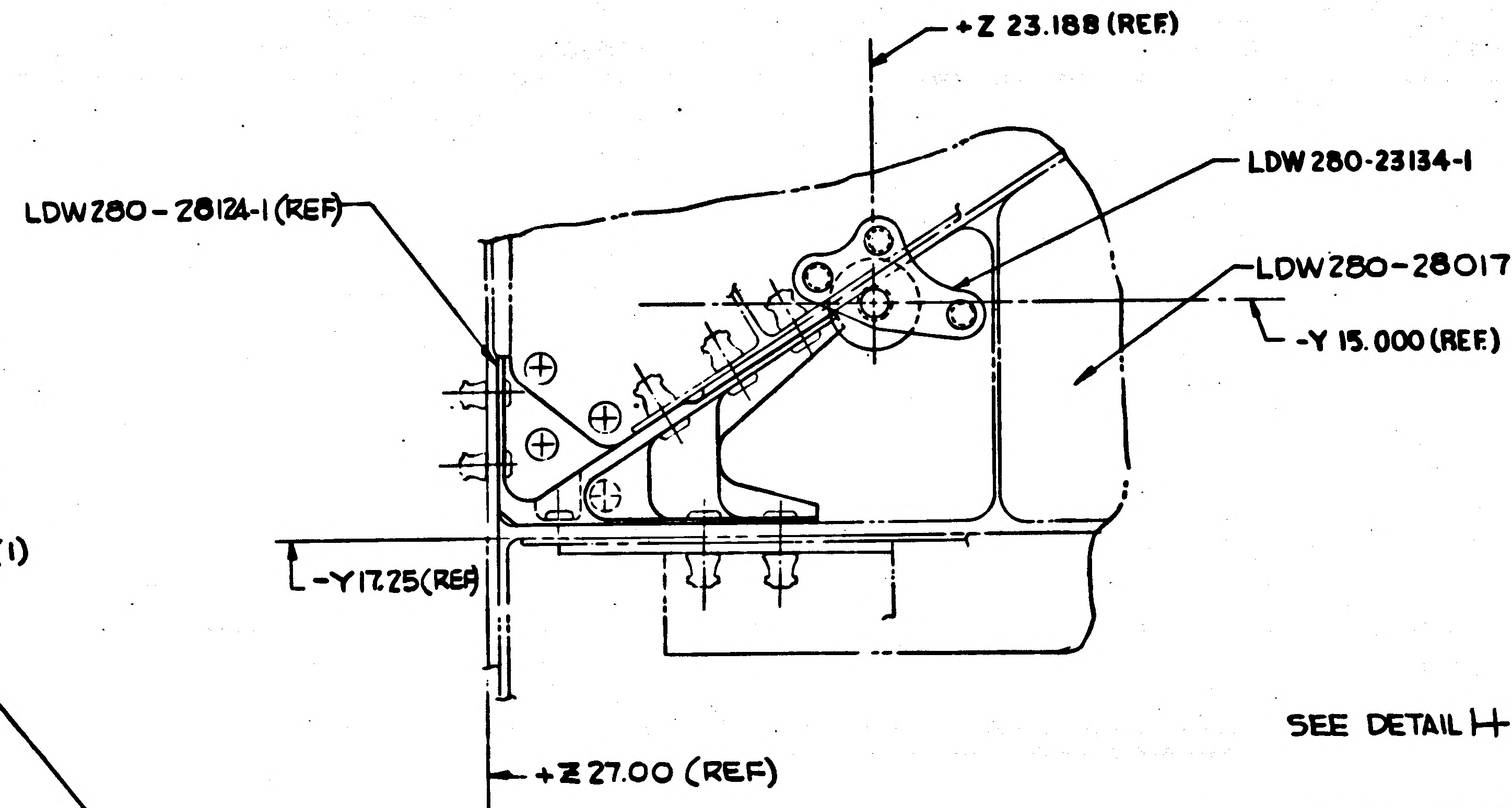

+Z 23.188 (REF)
LDW280-28124-1(REF)
LDW280-23134-1
LDW280-28017 (REF)
-Y 15.000 (REF)
-Y17.25(REF)
+Z 27.00 (REF)

DETAIL D-D SHOWN
ZONE 33 B
DETAIL H-H OPP
ZONE 33 C
SCALE - FULL

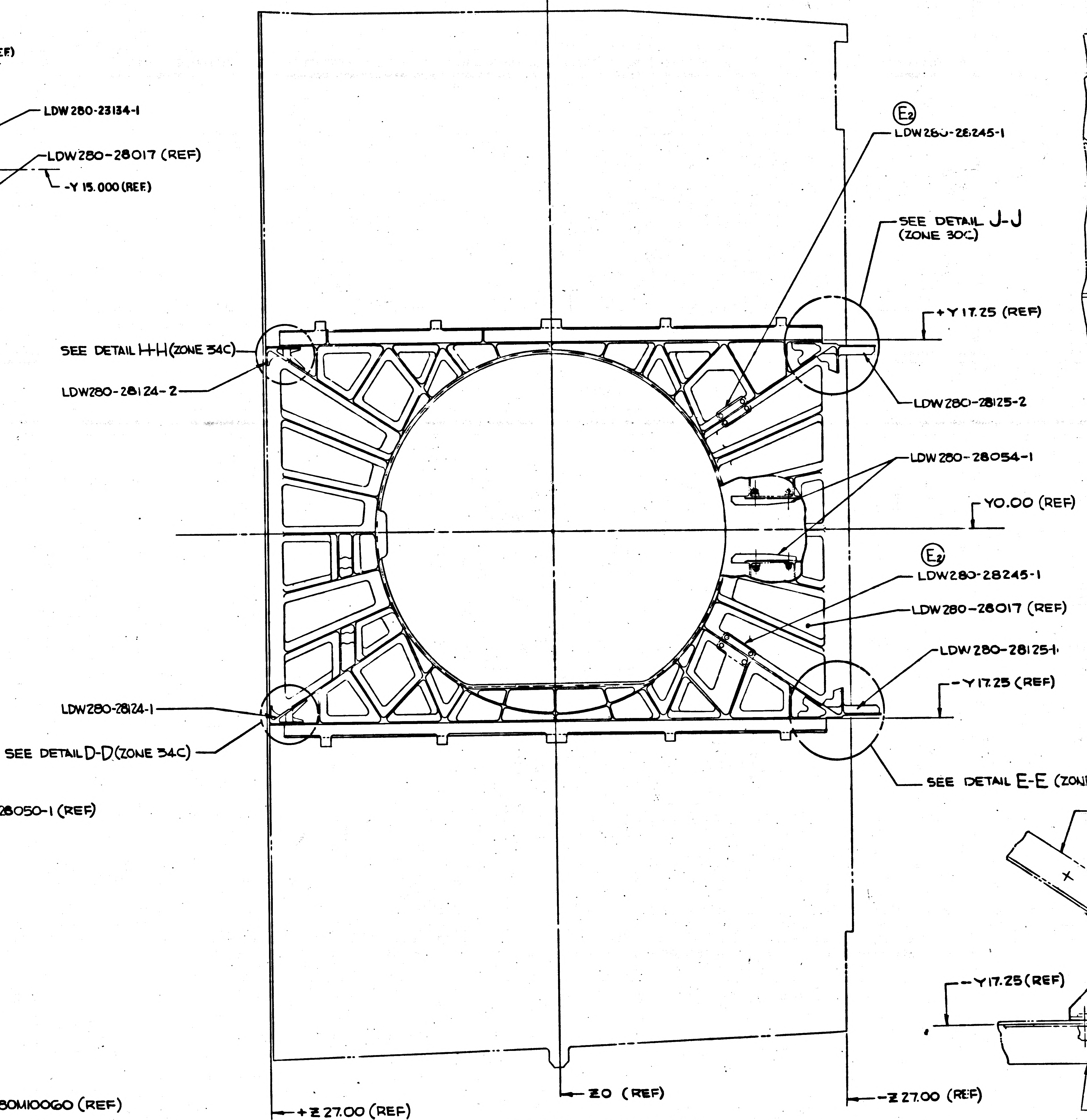

Ⓔ₂
LDW280-28245-1
SEE DETAIL J-J
(ZONE 30C)
+Y 17.25 (REF)
SEE DETAIL H-H (ZONE 34C)
LDW280-28124-2
LDW280-28125-2
LDW280-28054-1
Y0.00 (REF)
Ⓔ₂
LDW280-28245-1
LDW280-28017 (REF)
LDW280-28125-1
-Y17.25 (REF)
LDW280-28124-1
SEE DETAIL D-D (ZONE 34C)
SEE DETAIL E-E (ZON
-Y17.25(REF)
+Z 27.00 (REF)
Z0 (REF)
-Z 27.00 (REF)

SECT C-C (ZONE 11 B SH 3)
SCALE 1/4

FWD

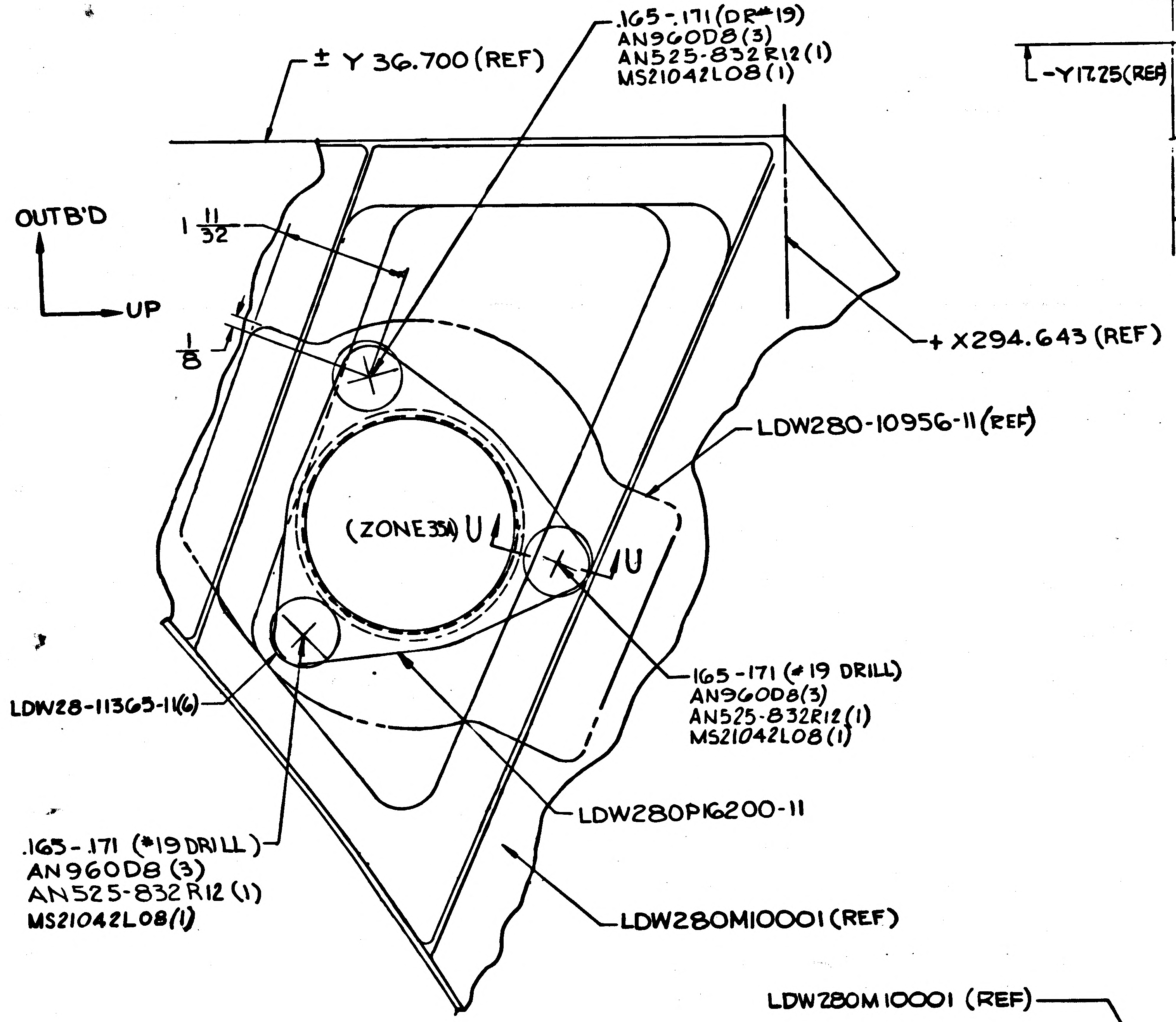

± Y 36.700 (REF)
.165-.171 (DR #19)
AN960D8 (3)
AN525-832R12 (1)
MS21042L08 (1)
OUTB'D
UP
1 11/32
1/8
+X294.643 (REF)
LDW280-10956-11 (REF)
(ZONE 35B) U
U
.165-.171 (#19 DRILL)
AN960D8 (3)
AN525-832R12 (1)
MS21042L08 (1)
LDW28-11365-11(6)
LDW280P16200-11
.165-.171 (#19 DRILL)
AN960D8 (3)
AN525-832R12 (1)
MS21042L08 (1)
LDW280M10001 (REF)

B

Ⓒ₁ DETAIL S (SHOWN)
ZONE 11B SH 3
DETAIL T (OPP)
ZONE 11C SH.3
SCALE - NONE

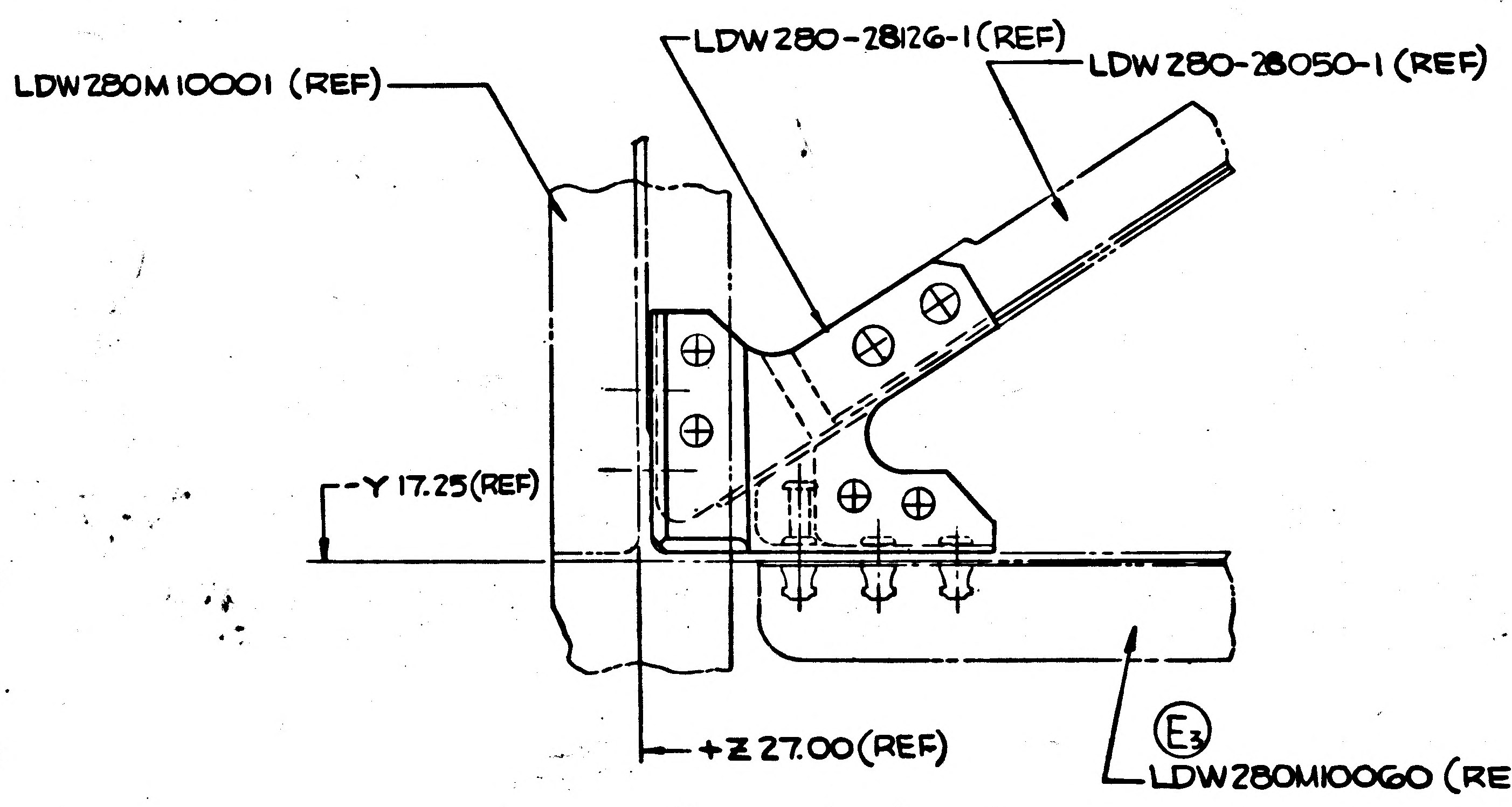

LDW280-28126-1 (REF)
LDW280-28050-1 (REF)
LDW280M10001 (REF)
-Y 17.25 (REF)
+Z 27.00 (REF)
Ⓔ₃
LDW280M10060 (REF)

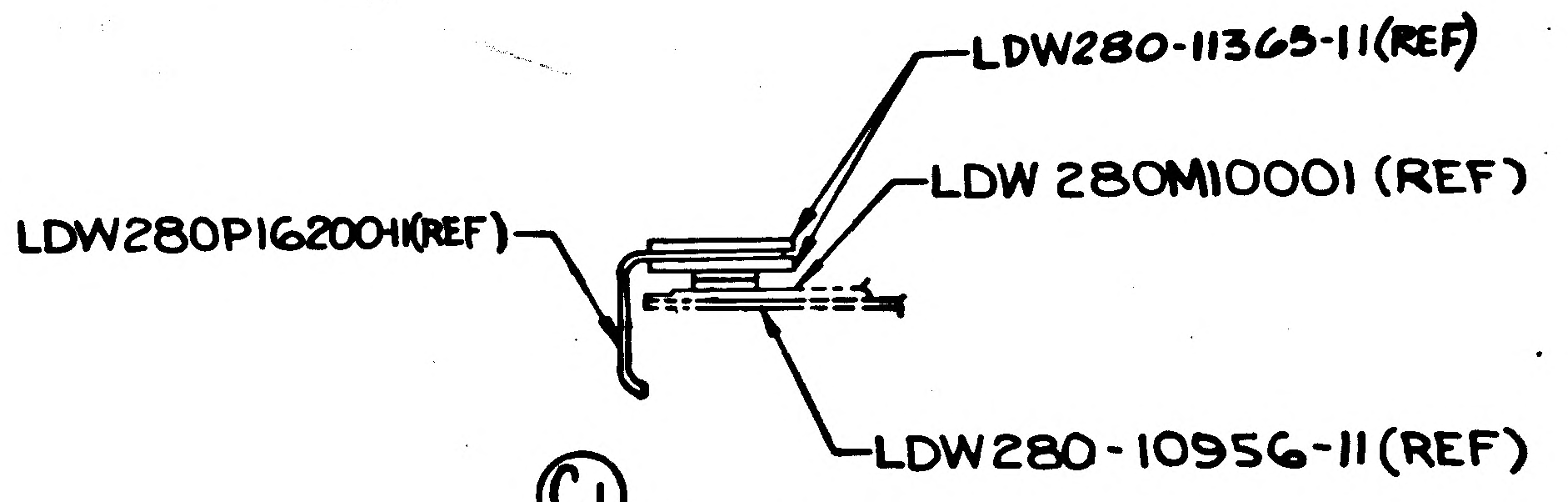

LDW280-11365-11 (REF)
LDW 280M10001 (REF)
LDW280P16200-1 (REF)
LDW280-10956-11 (REF)

A

Ⓒ₁ SECT U-U
ZONE 35 B
SCALE - NONE

DETAIL F-F (SHOWN)
ZONE 10A SH 3
DETAIL L-L (OPP)
ZONE 10C SH 3
SCALE FULL

01/02 NAS 9-1100

2/2

CODE IDENT NO. 26512	SH
LDW280-52012	5

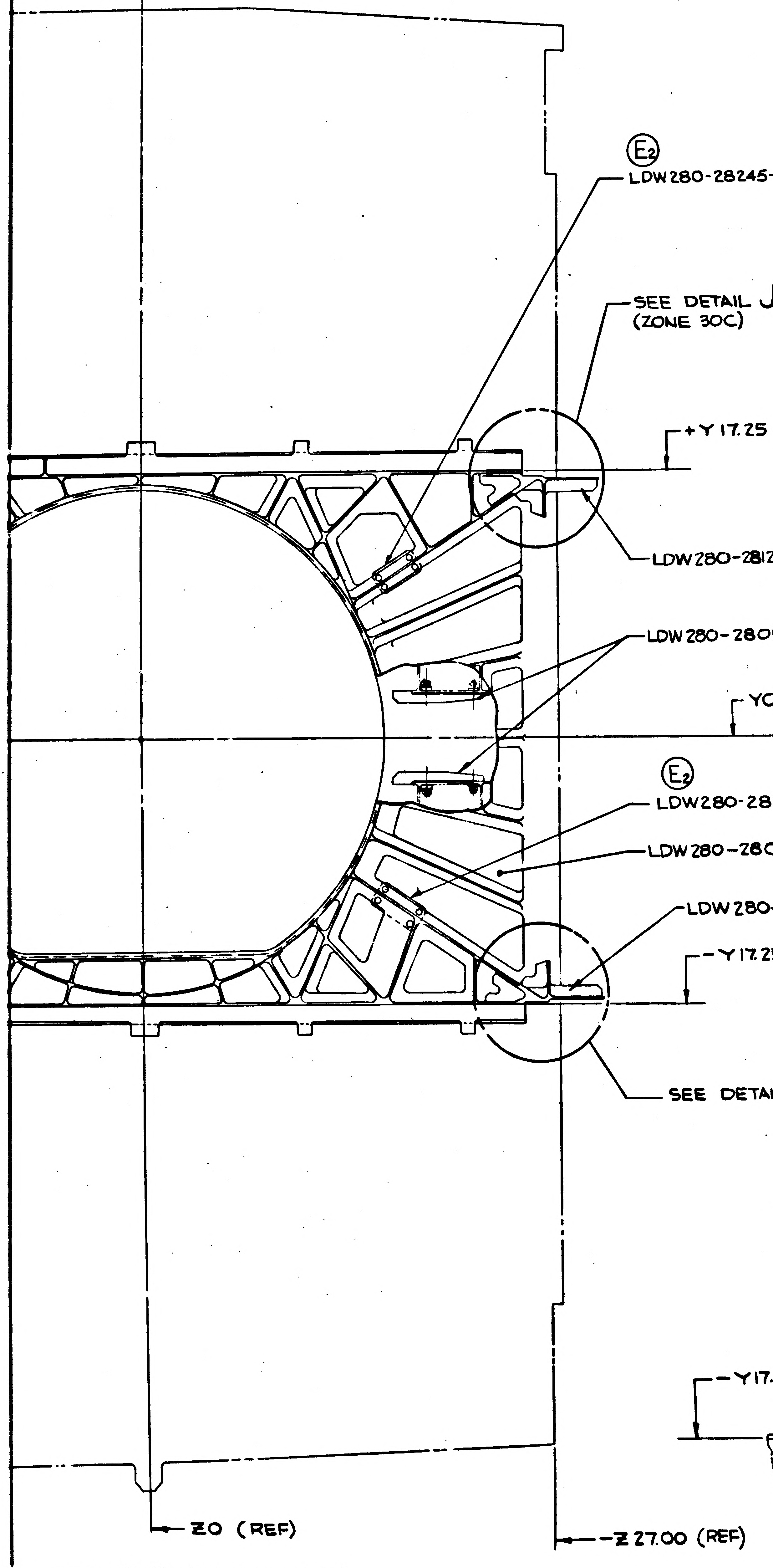
E2
LDW280-28245-1
SEE DETAIL J-J
(ZONE 30C)
+Y 17.25 (REF)
LDW280-28125-2
LDW280-28054-1
Y0.00 (REF)
E2
LDW280-28245-1
LDW280-28017 (REF)
LDW280-28125-1
-Y17.25 (REF)
SEE DETAIL E-E (ZONE 30 C)
Z0 (REF)
-Z 27.00 (REF)

SECT C-C (ZONE 11 B SH 3)
SCALE 1/4

FWD

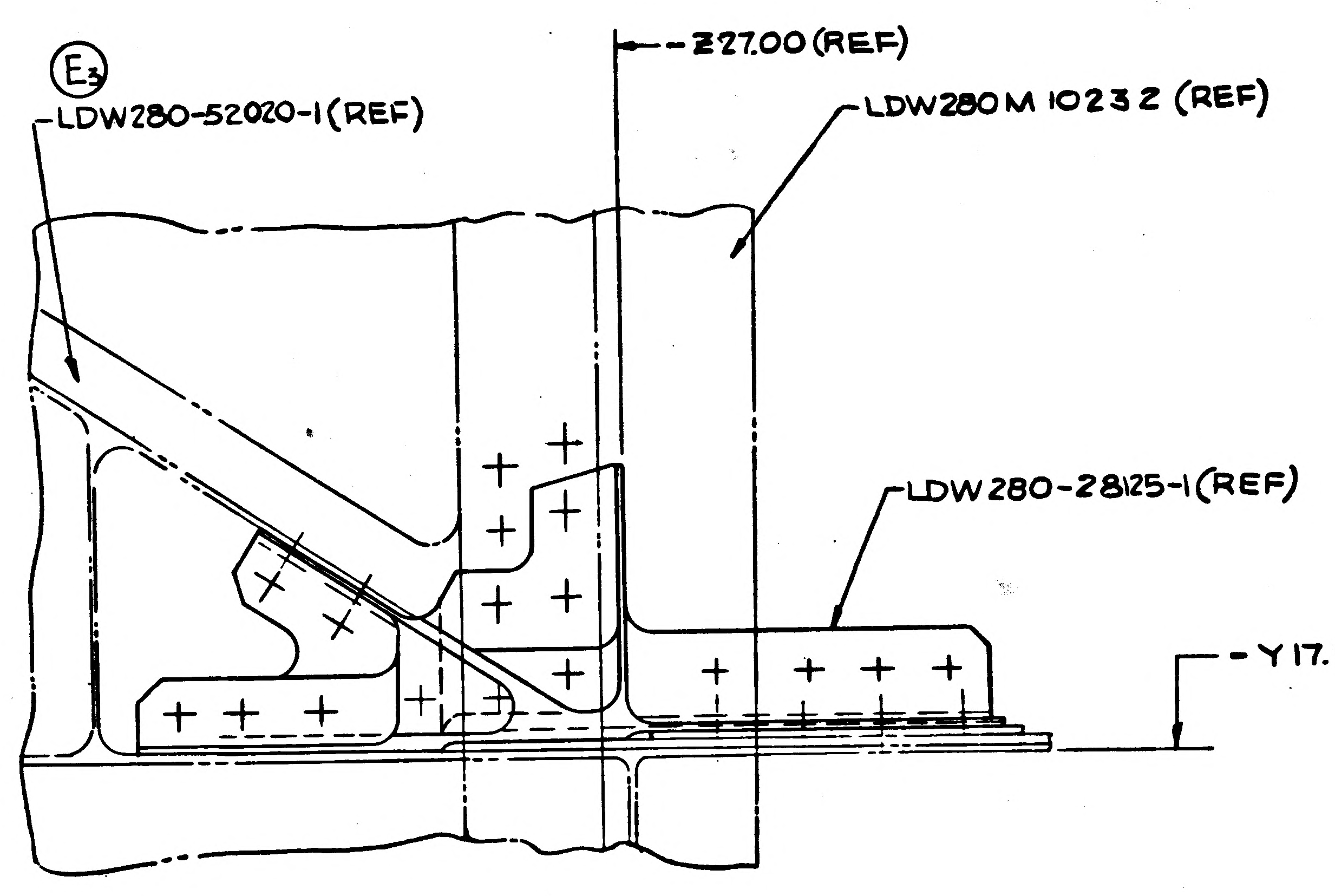
E3
LDW280-52020-1 (REF)
-Z27.00 (REF)
LDW280 M 10232 (REF)
LDW280-28125-1 (REF)
-Y17.25 (REF)

DETAIL E-E (SHOWN)
ZONE 31 B
DETAIL J-J (OPP)
ZONE 31 C
(SCALE FULL)

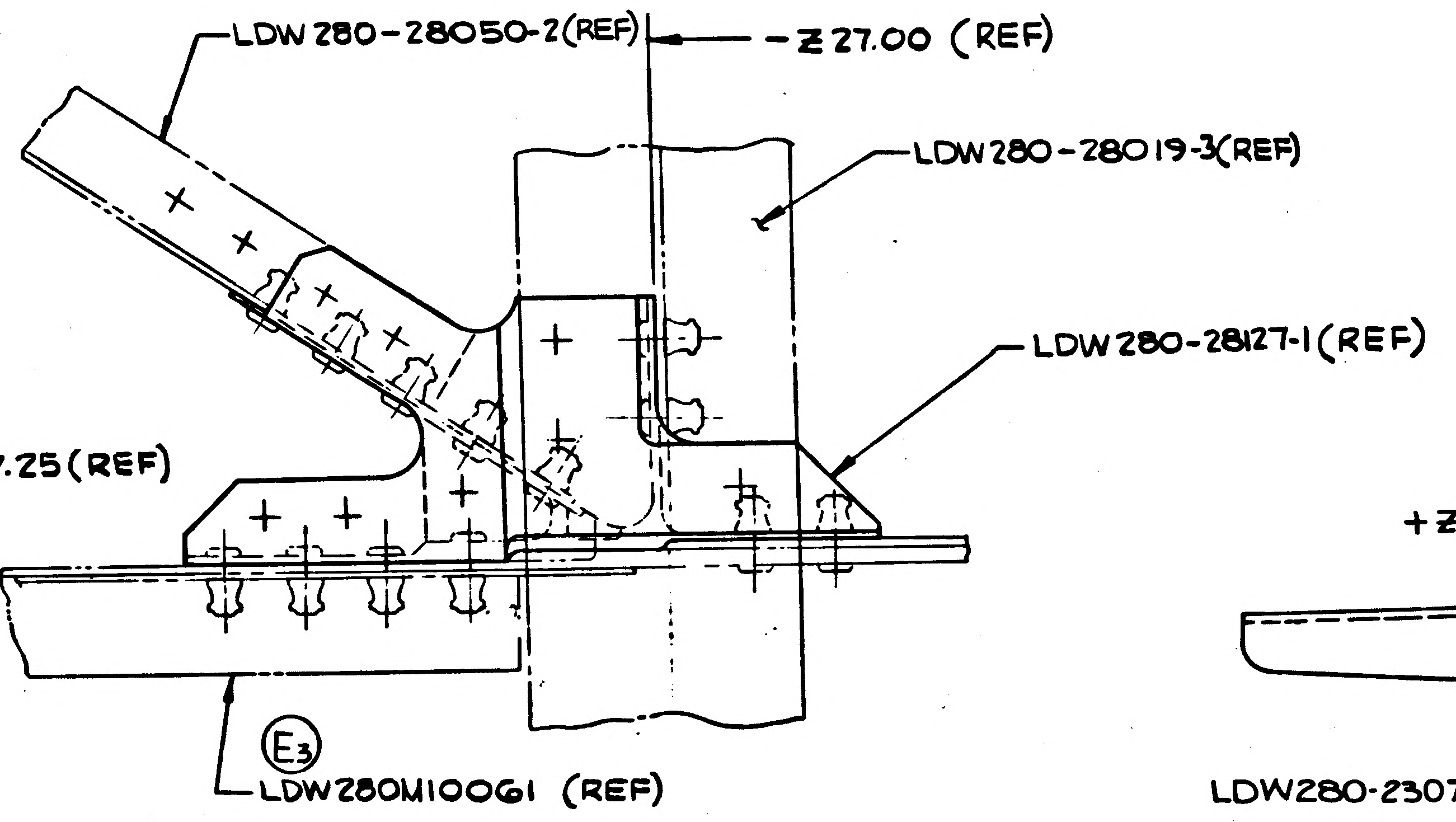
LDW280-28050-2 (REF)
-Z 27.00 (REF)
LDW280-28019-3 (REF)
LDW280-28127-1 (REF)
-Y17.25 (REF)
E3
LDW280M10061 (REF)

DETAIL G-G (SHOWN)
ZONE 9A SH3
DETAIL M-M (OPP)
ZONE 9C SH3
(SCALE FULL)

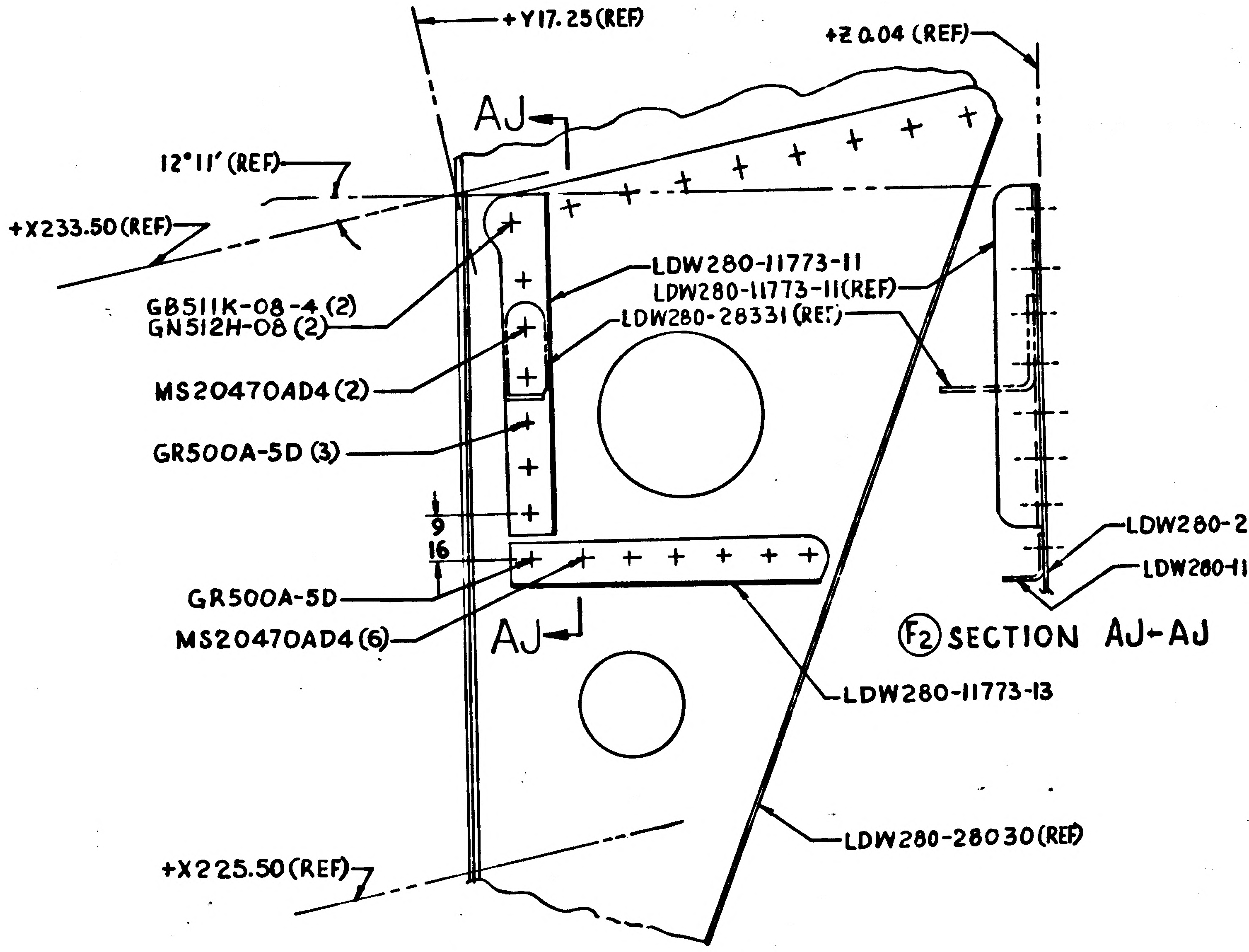
+Y17.25 (REF)
+Z 0.04 (REF)
AJ
12°11' (REF)
+X233.50 (REF)
GB511K-08-4 (2)
GN512H-08 (2)
LDW280-11773-11
LDW280-11773-11 (REF)
LDW280-28331 (REF)
MS20470AD4 (2)
GR500A-5D (3)
9/16
GR500A-5D
MS20470AD4 (6)
AJ
LDW280-28030 (REF)
LDW280-11773-13 (REF)
LDW280-11773-13
LDW280-28030 (REF)
+X225.50 (REF)

F2 SECTION AJ-AJ

F2 SECTION AH-AH (ZONE 19A SH4)
LOOKING AFT ROTATED 12°11' CCW
(SCALE FULL SIZE)

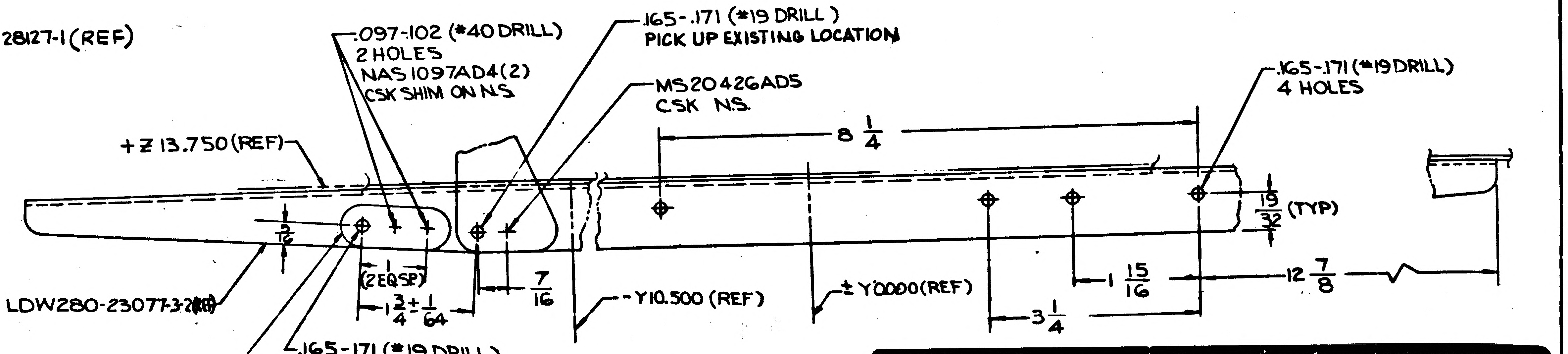
.097-.102 (#40 DRILL)
2 HOLES
NAS1097AD4 (2)
CSK SHIM ON N.S.
.165-.171 (#19 DRILL)
PICK UP EXISTING LOCATION
MS20426AD5
CSK N.S.
.165-.171 (#19 DRILL)
4 HOLES
+Z 13.750 (REF)
8 1/4
19/32 (TYP)
3/16
1 (2 EQ SP)
1 3/4 ± 1/64
7/16
-Y10.500 (REF)
± Y0.000 (REF)
1 15/16
12 7/8
3 1/4
LDW280-23077-3-2 (REF)
.165-.171 (#19 DRILL)
SHIM AS REQD .060 MAX.
SEE NOTE 4.

B2 SECT P-P
ZONE 23B SH4
SCALE-FULL

G2/02

NAS 9-1100

MANUFACTURING OPERATIONS
UNLESS OTHERWISE SPECIFIED
NOTES CHECKED √ APPLY TO THIS DWG.

PART NUMBER
AND ALL OTHER MARKINGS
IN REGION MARKED
USE BOTH SIDES IF NECESSARY.

FILLET AND INSIDE CORNER
RADII TOLERANCES
.015R TO .062R ± .010
.063R TO .250R ± .015
OVER .250R ± .030

DEPTH SHOWN FOR TAPPED
HOLES IS FULL THDS. 2-3 IMP THDS.
BEYOND PERMISSIBLE.

EXTERNAL THREAD LENGTH
SHOWN INCLUDES
2 IMPERFECT THREADS MAX.

DO NOT CADMIUM PLATE & PAINT
HOLES OR SURFACES MARKED
WITH DOUBLE ASTERISK.

MISMATCH STEP OF ± .005
PERMISSIBLE DUE TO CHANGE
OF CUTTERS AT INSIDE
INTERSECTING SURFACES.

DIAMETERS MARKED
MUST BE CONCENTRIC WITHIN
FULL INDICATOR
READING

HOLES MUST BE KEPT FREE OF
CHROME PLATING SOLUTION.

ALL DIMENSIONS SHOWN TO BE MET
AFTER CADMIUM PLATING.
THICKNESS OF PLATE .0003 MIN.
TO .0005 MAX. MIN. THICKNESS TO
BE .0002 ON THREADED AREAS.
NO ALLOWANCE FOR PLATING IN
HOLES

125 SURFACE ROUGHNESS
INCLUDING REAMED HOLES
PER MIL-STD-10

250 FOR ALL DRILLED HOLES

REMOVE ALL BURRS.
BREAK ALL EDGES .015-.031

INSPECTION INFORMATION
MINIMUM PERMISSIBLE
AVERAGE EDGE DISTANCE
MARKED IS

SYMBOL ƒ DENOTES SURFACE
TO BE MACHINED

UNLESS OTHERWISE SPECIFIED
TOLERANCE ON FLANGES IS ± 1/32

LENGTHS OF AN, NAS & MS AL ALY
RIVETS SHORTER THAN 1 INCH ARE
NOT SPECIFIED.

TOLERANCE ON LOFTED
DELINEATIONS IS

DWG SIZE 34 X 70

PRINTING INFO ONLY
FULL SIZE SHEET AREA (36 X 72) = 18 SQ. FT.
1/2 SIZE SHEET AREA (1/4 OF FULL) = SQ. FT.

PRINT TRIM LINE

C
B
A

LDW280-52012 F

LDW280-52012 F

	GRUMMAN AIRCRAFT ENGRG CORP., BETHPAGE, L. I., NEW YORK			
	SIZE J	CODE IDENT NO. 26512	LDW280-52012	F
LM MODEL OR END ITEM	SCALE NOTED		SHEET 5.00	

(F)

THIS IS AN ORIGINAL DRAWING

CODE IDENT NO. 26512	SHT
LDW280-52012	5

GMO 29.1 REV 3-65 *

GRUMMAN AIRCRAFT ENGINEERING CORP.
CODE IDENT NO. 26512
ENGINEERING ORDER

DWG. NO.	LDW 280-52012	EO NO.	A2
CONTROL INFO NO	LEM-3- 2433		

Add Note *

" Installation of GR10HAD4 and GR10HAD5 rivets shall also be considered acceptable even though a portion of the "O" ring extends beyond the periphery of the rivet head"

* Next available note no. 3

DETAIL SPEC REQ	☐	CL II ENGRG CHG	☐	CL I ENGRG CHG	☐

REASON FOR EO	DESCRIPTION OF EO	Ⓡ GAEC EO RELEASE
Provide acceptable sealing criteria.	Added note *	LE

MODEL	EFFECTIVITY		
	PROCURING ACTIVITY NO.	GAEC UNIT NO.	SUB CONTR UNIT NO.
LEM		LEM-2(32)	

DRAWING CHANGE REQD		DISPOSITION OF PARTS	
X		X	
REVISE DWG	RECORD EO	REWORK	SCRAP

APPROVED BY					BM		RHC Ⓔ	Bott
DATE	1/14/66			3/11/66	2-10-66	2-10-66	11-4-66	3-2-66
	VDI	SUPPORT	RELIAB. GROUP	GROUP LEADER	STRESS GROUP	LIAISON ENGRG	PROJ ENGRG	GOVT

PRIORITY	DRAWING TITLE	DRAWING NO.	EO NO.
C	Structure Assembly ASCENT STAGE-MID SECT.	LDW280-52012	A2

ISSUED BY Vic Bollo x2151 2-10-66 SECTION VDI PHILLIPS GROUP NO. ____ PL 35

ENG 32.1 REV 3-65

*

GRUMMAN AIRCRAFT ENGINEERING CORP.
CODE IDENT NO. 26512
ENGINEERING ORDER

DWG. NO. LDW280-52012		EO NO.	D1
CONTROL INFO NO. LDW280-M-0054			

ON-1 INSTL.

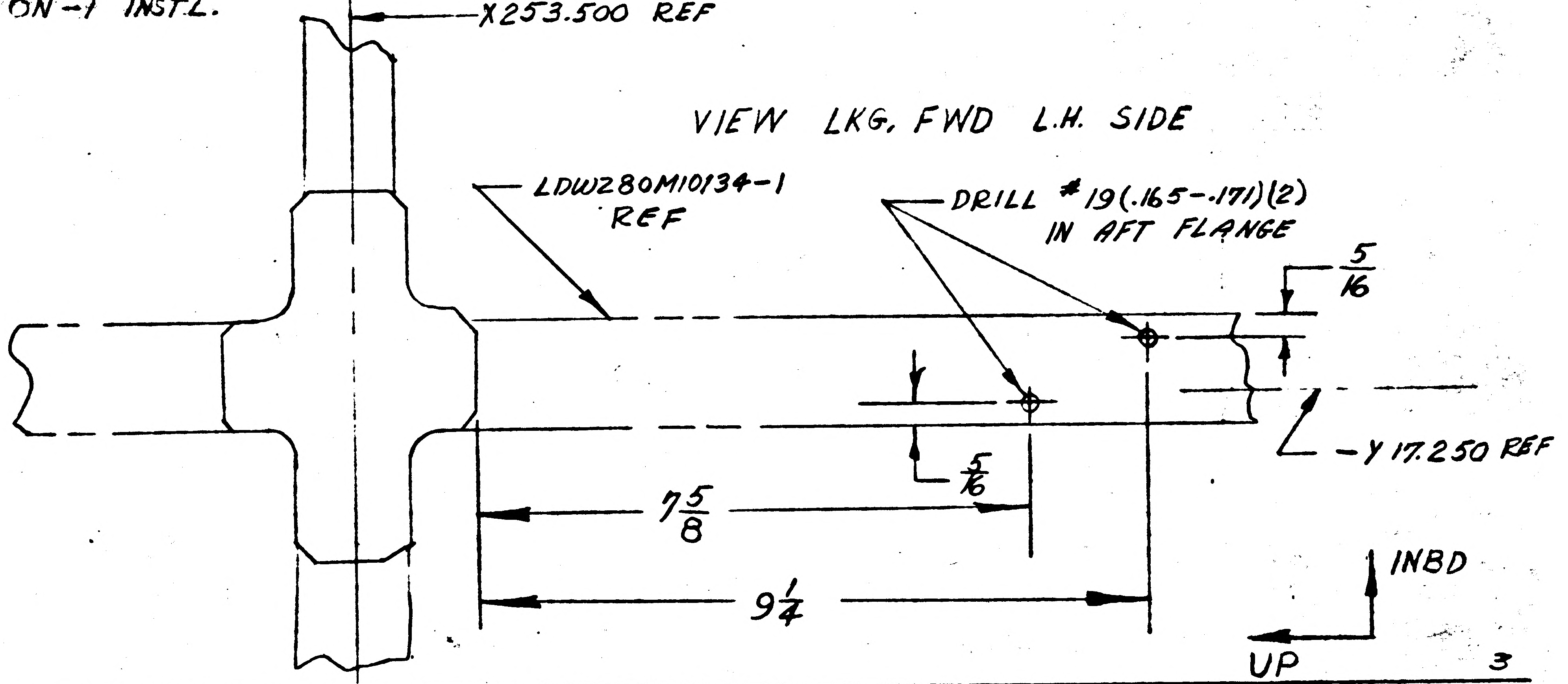

X253.500 REF
VIEW LKG. FWD L.H. SIDE
LDW280M10134-1 REF
DRILL #19(.165-.171)(2) IN AFT FLANGE
5/16
5/16
Y17.250 REF
7 5/8
9 1/4
INBD
UP
3

DETAIL SPEC REQ		CL II ENGRG CHG	CL I ENGRG CHG	

REASON FOR EQ: PROVIDE SUPPORT FOR ZONE BOX

DESCRIPTION OF EO: ON-1 [redacted] ADD #19 HOLES (2)

GAEC EO RELEASE: FR 9/29/6

MODEL	EFFECTIVITY: PROCURING ACTIVITY NO.	GAEC UNIT NO.	SUB CONTR UNIT NO.
LEM		LEM-2(32)	

DRAWING CHANGE REQD		DISPOSITION OF PARTS		APPROVED BY	WT	AHR		~	90		RMC	[illegible]
✓		✓		DATE ✓	9/16/66	103		~	5-26-66		9-29	9/28/66
REVISE DWG	RECORD EO	REWORK	SCRAP		VDI	~~SUPPORT~~ WS	RELIAB. GROUP	GROUP LEADER	STRESS GROUP	LIAISON ENGRG	PROJ ENGRG	~~SOFT~~

PRIORITY	DRAWING TITLE	DRAWING NO.	EO NO.
C	BRACKET INSTL ASCENT MID-SECT - Z27 EQUIP LINES	LDW280-52012	D1

ISSUED BY K. BEACH / W. TRAUT X6455 SECTION VDI GROUP NO. 335 PL 5

01

NAS 9-1100

ENG 32.1 REV 3-65

*

GRUMMAN AIRCRAFT ENGINEERING CORP.
CODE IDENT NO. 26512

ENGINEERING ORDER

DWG. NO LDW280-52012

EO NO. E1

CONTROL INFO NO. LM 5-9292

IN FLD & B/M ADD LDW280-51842-1&2 BRACKET INSTL

5

DETAIL SPEC REQ		CL II ENGRG CHG		CL I ENGRG CHG	

REASON FOR EO	DESCRIPTION OF EO	GAEC EO RELEASE
TO SECURE ELECT. BUNDLE	ADDED LDW280-51842-1&2 TO FLD & B/M	E

MODEL	EFFECTIVITY		
	PROCURING ACTIVITY NO.	GAEC UNIT NO.	SUB CONTR UNIT NO.
LM		LM-2 (32)	

DRAWING CHANGE REQD		DISPOSITION OF PARTS		APPROVED BY	WT			~	98	CH	RMC (AR)	
✓		✓		DATE	10/13/66			~	10-12-66	10-18-66	10-19-66	10-18-66
REVISE DWG	RECORD EO	REWORK	SCRAP	10-12-66	VD1	SUPPORT	RELIAB. GROUP	GROUP LEADER	STRESS GROUP	LIAISON ENGRG	PROJ ENGRG	GOVT

PRIORITY	DRAWING TITLE	DRAWING NO.	EO NO.
C	MID SECTION ASSEMBLY ASCENT STAGE	LDW280-52012	E1

✓ ISSUED BY LOUIS BERLINQUETTE x 6456 SECTION VD1 GROUP NO. 335 PL 5

01

NAS 9-1100

ENG 32.1 REV 3-65

GRUMMAN AIRCRAFT ENGINEERING CORP.
CODE IDENT NO. 26512
ENGINEERING ORDER

DWG. NO. LDW280-52012	EO NO. F1
CONTROL INFO NO. LM-5-11446	

ON-1
LDW 280-28030-2-2 WAS-2

RELEASED BY LIAISON

DETAIL SPEC REQ		CL II ENGRG CHG		CL I ENGRG CHG		5

REASON FOR EO	DESCRIPTION OF EO	② GAEC e EO RELEASE
SUB-ASSY. PART NO. CHANGED	ON-1, LDW280-28030-2-2 WAS-2	E

MODEL	EFFECTIVITY			DRAWING CHANGE REQD		DISPOSITION OF PARTS		APPROVED BY	WT			~	CW	CH	RMC		
	PROCURING ACTIVITY NO.	GAEC UNIT NO.	SUB CONTR UNIT NO.	✓		✓		DATE	12/16/66			~	12-16-6	12-17	12-20	12/15/66	
LM		LM-2(32)		REVISE DWG	RECORD EO	REWORK	SCRAP	6	VDI	SUPPORT	RELIAB. GROUP	GROUP LEADER	STRESS GROUP	LIAISON ENGRG	PROJ ENGRG		
				PRIORITY	DRAWING TITLE							DRAWING NO.			EO NO.		
				C	M/S ASSY. A/S							LDW280-52012			F1		

ISSUED BY F. STIENMETZ/P. GRUND X6454 12-16-66 SECTION VDI GROUP NO. 335 PL 5

01 1 NAS 9-1100

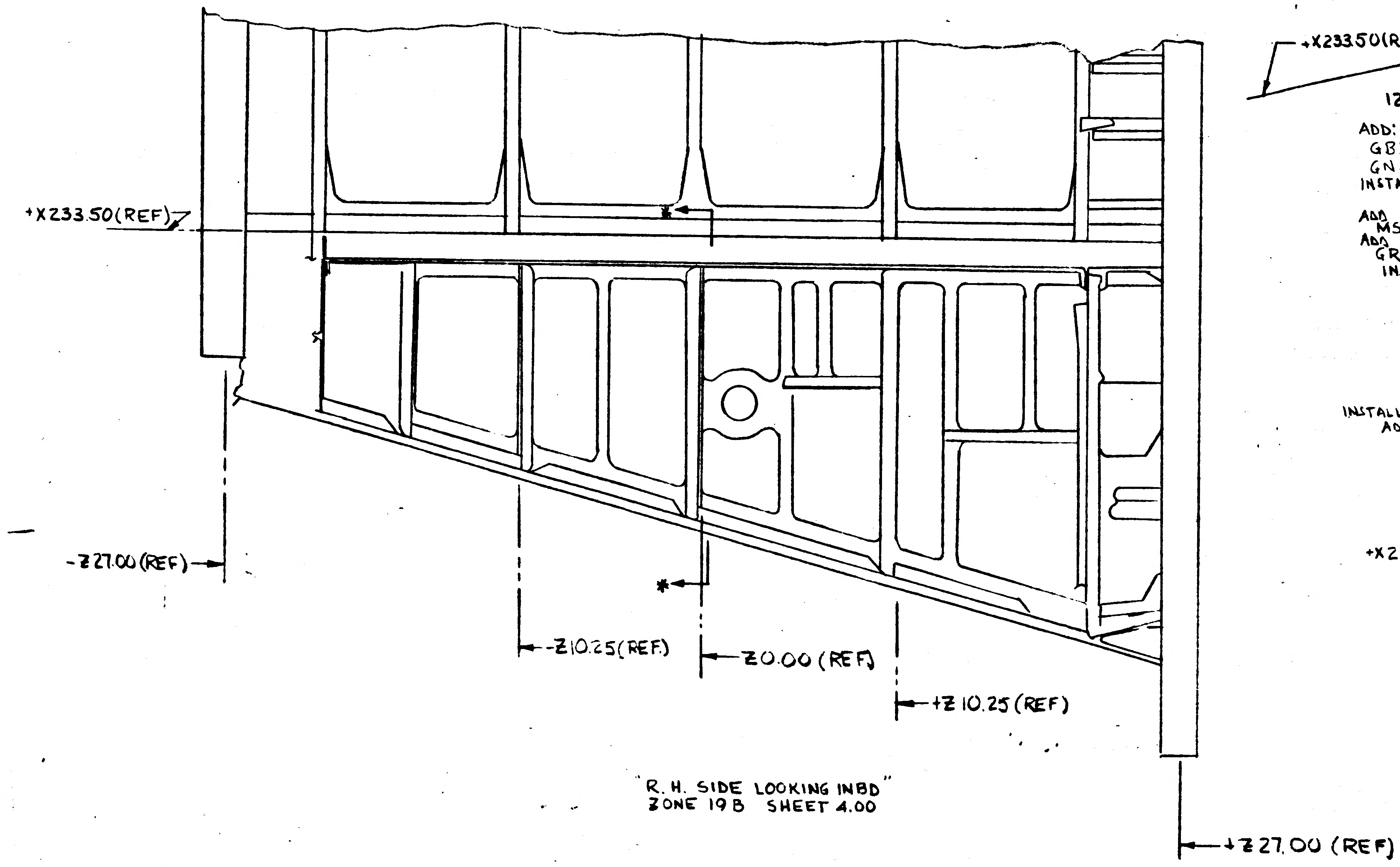
+X233.50(REF)
-Z27.00(REF)
-Z10.25(REF)
Z0.00(REF)
+Z10.25(REF)
+Z27.00 (REF)
*

"R. H. SIDE LOOKING INBD"
ZONE 19B SHEET 4.00

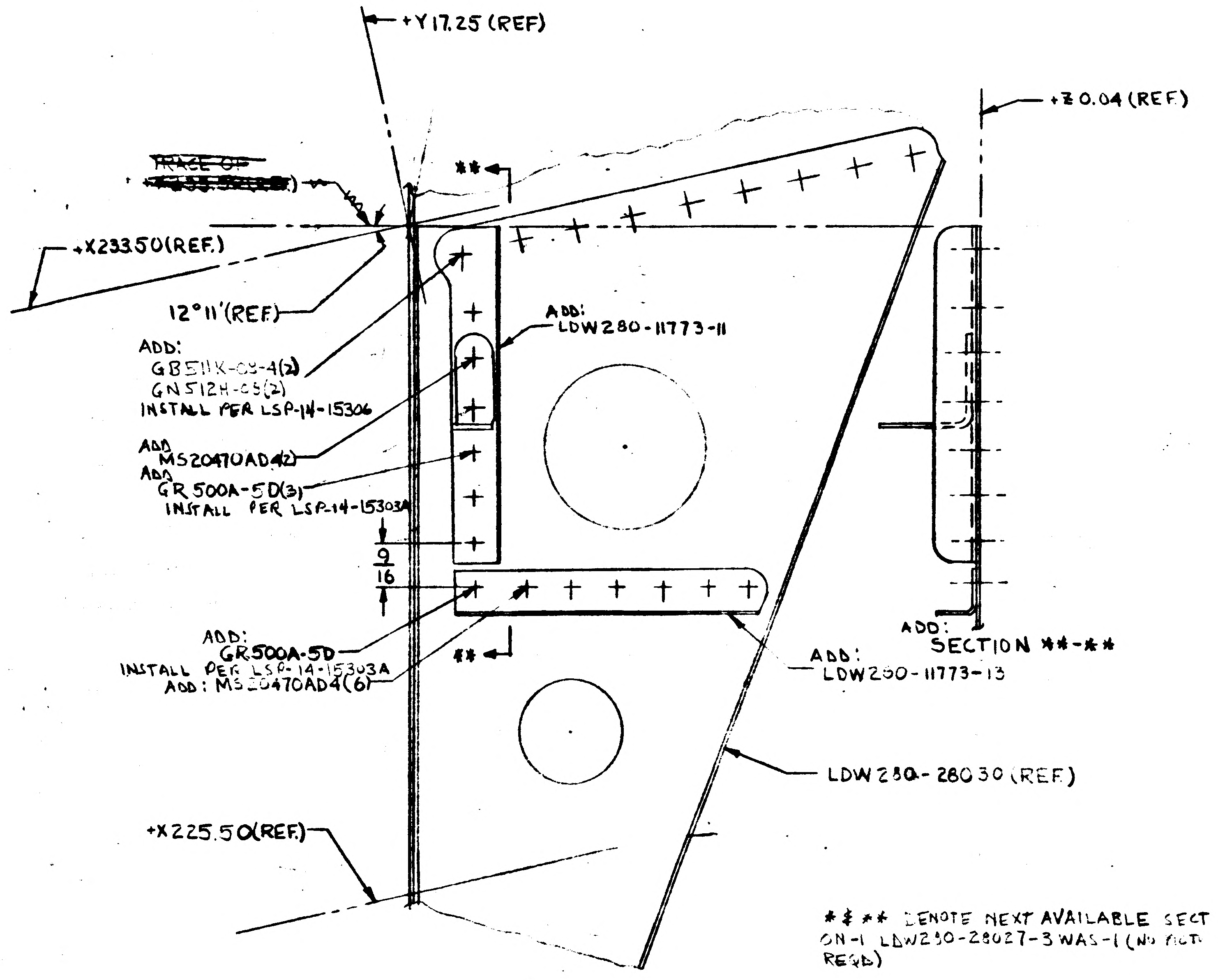
+Y17.25 (REF)
+Z0.04 (REF)
~~TRACE OF~~
+X233.50(REF.)
12°11'(REF)
**
ADD:
GB511K-03-4(2)
GN512H-03(2)
INSTALL PER LSP-14-15306
ADD
MS20470AD4(2)
ADD
GR500A-5D(3)
INSTALL PER LSP-14-15303A
ADD:
LDW280-11773-11
9/16
ADD:
GR500A-5D
INSTALL PER LSP-14-15303A
ADD: MS20470AD4(6)
ADD:
LDW280-11773-13
ADD:
SECTION **-**
LDW280-28030 (REF)
+X225.50(REF)

** ** DENOTE NEXT AVAILABLE SECT NUMBERS
ON-1 LDW280-28027-3 WAS -1 (NO FICTURE CHANGE REQD)

ADD:
SECTION *-*
LOOKING AFT - ROTATED 12°11' CCW
FULL SIZE

SHOP NOTE: IF LDW280-11029-13 & -15 HAVE BEEN INSTALLED THEY MAY BE REIDENTIFIED AS LDW280-11773-11 & -13 RESPECTIVELY. PLUG HOLES LEFT AFTER REMOVAL OF LDW280-28274 WITH MS20470AD RIVETS.

DESC. OF EO CONTD MS20470AD4(8), GR500A-5D(4). ON-1 LDW280-28027-3 WAS -1.

THIS IS AN ORIGINAL E.O.

CONTROL NO. LM-2-11592

DETAIL SPEC REQ | EO ENGRG THG | Z ENGRG

REASON FOR EO: IMPRACTICAL TO REMOVE CANCELLED PART AT PRESENT STAGE OF FABRICATION

DESCRIPTION OF EO: ADDED SECT * & ** ~~THIS EO CANCELS EO~~ ON-1: ADDED LDW280-11773-11 & -13, GB511K-03-4(2), GN512H-03(2). (CONTINUED ABOVE)

MODEL: LM
EFFECTIVITY: LM-2(32)
DRAWING CHANGE REQD: REVISE DWG ✓
DISPOSITION OF PARTS: REWORK ✓
APPROVED BY: VJT
DATE: 1/11/67
VD1
PRIORITY: C
DRAWING TITLE: M/S ASSY A/S
DRAWING NO.: LDW280-52012

ISSUED BY A WILSON/F. GRUND X6510 1-11-67 SECTION VD1 GROUP NO. 335 PL 5

01 NAS 9-1100

B

ENG 32.1 REV 3-65

GRUMMAN AIRCRAFT ENGINEERING CORP.
CODE IDENT NO. 26512
ENGINEERING ORDER *

DWG. NO. LDW 280-52012		EO NO.	F3
CONTROL INFO NO.	LDW 280 A-5050		

ON-1:

LDW 280-28019-3 WAS LDW 280-28019-1

WORK PKG FUCTION # 110

(THIS EO FOR DWG CORRECTION)
SEE LDW280-28019_ (3)

DETAIL SPEC REQ	☐	CL II ENGRG CHG	☐	CL I ENGRG CHG	☐	LCR 820

REASON FOR EO: To Provide for Ass Support Per LCR No. 820 (REF EO LDW280-28019 _)

DESCRIPTION OF EO: ON-1: LDW 280-28019-3 Was LDW 280-28019-1

GAEC C EO RELEASE: 1/27/7

MODEL	~~PROCURING ACTIVITY NO.~~	GAEC UNIT NO.	~~SUB CONTR UNIT NO.~~
LM	LM-2 (32)		

DRAWING CHANGE REQD: REVISE DWG	RECORD EO	DISPOSITION OF PARTS: REWORK	SCRAP
✓		✓	

	V.D.I.	SUPPORT	RELIAB. GROUP	GROUP LEADER	STRESS GROUP	LIAISON ENGRG	PROJ ENGRG	GOVT
APPROVED BY								
DATE	1/23/67			1/23/67	1/26		1/26/67	1/27/67
5								

PRIORITY	DRAWING TITLE	DRAWING NO.	EO NO.
C	MID SECTION ASSEMBLY - ASCENT STAGE	LDW 280-52012	F3

ISSUED BY Geo. W Rockklein x1153 1/18/67 SECTION Veh. Des. Int. GROUP NO. 335 PL 35

01 NAS 9-1100

1

ENG 32.1 REV 3-65

B

GRUMMAN AIRCRAFT ENGINEERING CORP.
CODE IDENT NO. 26512
ENGINEERING ORDER

*

DWG. NO.	LDW280-52012
EO NO.	F4
CONTROL INFO NO.	LDW280A-6333

ON-1
IN B/m & F/D DELETE LDW280-23077-3-1 INSTL
REPLACE WITH LDW280-23077-3-2 INSTL

IN B/m & F/D DELETE LDW280-28079-3 INSTL
REPLACE WITH LDW280-28079-3-1 INSTL

(REWORK NOTE: NO PICTURE CHG REQ'D ON DWG)

DETAIL SPEC REQ	☐	CL II ENGRG CHG	✓	CL I ENGRG CHG	☐	LCD19-1202	3

REASON FOR EO: REVISE B/m & F/D TO REFLECT INSTL DWG DASH No. CHANGES

DESCRIPTION OF EO:
ON-1
DELETED LDW280-23077-3-1 ADDED LDW280-23077-3-2
DELETED LDW280-28079-3 ADDED LDW280-28079-3-1

(F) GAEC C EO RELEASE: JK 4/20/7

MODEL	PROCURING ACTIVITY NO.	GAEC UNIT NO.	SUB CONTR UNIT NO.
LM		LM-2 (32)	

DRAWING CHANGE REQD: REVISE DWG ✓ | RECORD EO

DISPOSITION OF PARTS: REWORK | SCRAP

APPROVED BY	Cap			JW	BW		Dam	JJ
DATE	4/13/67			4/17/67	4-14		4/18/67	4/19/67
1	VDI	SUPPORT	RELIAB. GROUP	GROUP LEADER	STRESS GROUP	LIAISON ENGRG	PROJ ENGRG	~~[illegible]~~

PRIORITY	DRAWING TITLE	DRAWING NO.	EO NO.
C	MID-SECT ASSY A/S	LDW280-52012	F4

ISSUED BY Tom BIANCHI (1392)   SECTION VDI (EQUIP LINES)   GROUP NO. 332   PL 25

01   NAS 9-1100

B

ENG 32.1 REV 3-65

FITH

GRUMMAN AIRCRAFT ENGINEERING CORP.
CODE IDENT NO. 26512
ENGINEERING ORDER

DWG. NO. LDW280-52012
EO NO F5
CONTROL INFO NO. LDW280A 6501

ON - 1 INSTL REMOVE LDW280-28100-1 INSTL
ADD LDW280-28100-3 INSTL (1REQD)
REMOVE LDW280-28078-1 INSTL &
ADD LDW280-28078-3 INSTL (1REQD)

DETAIL SPEC REQ		CL II ENGRG CHG	✓	CL I ENGRG CHG		LCD 19 -1244

3

REASON FOR EO: INCREASE 'FITH' LOADS

DESCRIPTION OF EO: ON-1 INSTL REMOVED LDW280-28100-1 (1 REQ'D), LDW280-28078-1 (1REQ'D). ADDED LDW 280-28100-3 (1REQD) & LDW280-28078-3 (1REQ'D).

GAEC EO RELEASE: JK 4/21/7

MODEL	EFFECTIVITY		
	PROCURING ACTIVITY NO.	GAEC UNIT NO.	SUB CONTR UNIT NO.
LM		LM-2(32)	

DRAWING CHANGE REQD		DISPOSITION OF PARTS	
REVISE DWG	RECORD EO	REWORK	SCRAP
✓		✓	

APPROVED BY							
DATE 4/21/67				4/21/67	4/21		4/21/67
5	VDI	SUPPORT	RELIAB. GROUP	GROUP LEADER	STRESS GROUP	LIAISON ENGRG	PROJ ENGRG

PRIORITY	DRAWING TITLE	DRAWING NO.	EO NO.
C	MID SECTION ASSY ASCENT STAGE	LDW280-52D12	F5

ISSUED BY V.A. CHRISTINA / F. DeRespinis
SECTION VDI X1392
GROUP NO. 335
PL 25

01

NAS 9-1100

B

ENG 32.1 REV 3-65

GRUMMAN AIRCRAFT ENGINEERING CORP.
CODE IDENT NO. 26512
ENGINEERING ORDER

DWG. NO. LDW280-52012
EO NO. F6
CONTROL INFO NO. LM5-13198

ON-1 INSTL

LDW280-28030-1-2 REPLACES LDW280-28030-1

RELEASED BY LIAISON

DETAIL SPEC REQ	☐	CL II ENGRG CHG	☑	CL I ENGRG CHG	☐

5

REASON FOR EO: ENGINE SIGNAL CONDITIONERS RELOCATED TO PROVIDE BETTER ACCESSIBILITY

DESCRIPTION OF EO: ON-1 INSTL
ADDED LDW280-28030-1-2, REMOVED LDW280-28030-1

GAEC C EO RELEASE: VK —

MODEL	PROCURING ACTIVITY NO.	GAEC UNIT NO.	SUB CONTR UNIT NO.
LM		LM-2 (32)	

DRAWING CHANGE REQD: REVISE DWG	RECORD EO	DISPOSITION OF PARTS: REWORK	SCRAP
✓		✓	

					GROUP LEADER	STRESS GROUP	LIAISON ENGRG	PROJ ENGRG	~~CONT.~~
APPROVED BY	WT				~	JFJ	CH	DAM	
DATE	4/17/67				~	4-22-67	4-18-67	4-25-67	[illegible]
1	VDI	SUPPORT	RELIAB. GROUP						

PRIORITY: C
DRAWING TITLE: MID-SECTION ASSEMBLY ASCENT STAGE
DRAWING NO.: LDW280-52012
EO NO.: F6

ISSUED BY: W. TRAUT x6510
SECTION: VDI
GROUP NO.: 335
PL: 5

01

NAS 9-1100

ENG 32.1 REV 3-65

GRUMMAN AIRCRAFT ENGINEERING CORP.
CODE IDENT NO. 26512
ENGINEERING ORDER

DWG. NO. LDW280-52012
EO NO. F7
CONTROL INFO NO. LDW280A6758

FOR -1

ADDED LDW280-28078-3
WAS LDW280-28078-1

ADDED LDW280-28079-5
WAS LDW280-28079-1

DETAIL SPEC REQ	☐	CL II ENGRG CHG	☐	CL I ENGRG CHG	✓	LCD832A CCA502 3

REASON FOR EO: RELOCATION OF PLSS BATTERY

DESCRIPTION OF EO: ON -1 LDW280-28078-3 (WAS -1)
LDW280-28079-5 (WAS -1)

GAEC EO RELEASE: C JK 5/11/7

MODEL	PROCURING ACTIVITY NO.	GAEC UNIT NO.	SUB CONTR UNIT NO.
LM		LM-2 (32)	

DRAWING CHANGE REQD: REVISE DWG	RECORD EO	DISPOSITION OF PARTS: REWORK	SCRAP
✓		✓	

APPROVED BY								Dam	
DATE	5/6/67			5/6/67				5/8/67	5/10/67
2	UDI	SUPPORT	RELIAB. GROUP	GROUP LEADER	STRESS GROUP	LIAISON ENGRG	PROJ ENGRG		

PRIORITY	DRAWING TITLE	DRAWING NO.	EO NO.
C	MID SECTION ASSY	LDW280-52012	F7

ISSUED BY R.P. OBERNDORFER X7033 SECTION UDI GROUP NO. 235 PL 25

01 NAS 9-1100

ENG 32.1 REV 3-65

GRUMMAN AIRCRAFT ENGINEERING CORP.
CODE IDENT NO. 26512
ENGINEERING ORDER
*

DWG. NO. LEO 280
EO NO. 608
CONTROL INFO NO. LM-3-5151

DRAWING NO	CHG.	DESCRIPTION OF CORRECTION	EFFECT.
LDW280-52012	F8	ON INCORP. OF E.O. F7 LDW280-28079-3-1 WAS LDW280-28079-5	LM-2 (32)
LDW280-11095	B3	ON INCORP. OF E.O. B2 N/A LDW280-28026 WAS LDW280-28067 (IN ERROR)	LTA-8 (18)
LDW280-11738	C3	ON INCORP. OF E.O. C1 -35 ASSY WAS -11 ASSY. (-11 PREVIOUSLY USED & SCRAPED.)	LM-3 (33) THRU LM-15 (45)
LDW280-53186	B3	ON INCORP. OF E.O. A10 LDW 280-11738-35 ASSY WAS LDW280-11738-11 ASSY	LM-3 (33) THRU LM-15 (45)
LDW280-53012	C3	ON INCORP. OF E.O. C2 LDW 280-53079-3-1 WAS LDW 280-53079-5	LM-3 (33)

DETAIL SPEC REQ ☐ CL II ENGRG CHG ☑ CL I ENGRG CHG ☐

3

REASON FOR EO: PROVIDE MULTIPLE DRAWING CORRECTIONS.

DESCRIPTION OF EO: NOTED

GAEC EO RELEASE: J/K

MODEL	EFFECTIVITY		
	PROCURING ACTIVITY NO.	GAEC UNIT NO.	SUB CONTR UNIT NO.
LM		NOTED	

DRAWING CHANGE REQD: REVISE DWG ✓ RECORD EO

DISPOSITION OF PARTS: REWORK SCRAP — NOT REQD

		SUPPORT	RELIAB. GROUP	GROUP LEADER	STRESS GROUP	LIAISON ENGRG	PROJ ENGRG	~~GOVT~~
APPROVED BY				—	—			
DATE	7/5/67			—	—		5-31-67	5/31/67
6	VDI							

PRIORITY: C
DRAWING TITLE: SEE DRAWING
DRAWING NO.: LEO 280
EO NO.: 608

ISSUED BY LIAISON / VIC BOLLO X2151 SECTION VDI GROUP NO. 335 PL 25

01

NAS 9-1100

B

ENG 32.1 REV 3-66

GRUMMAN AIRCRAFT ENGINEERING CORP.
CODE IDENT NO. 26512
ENGINEERING ORDER

DWG. NO.	LDW 280-52012	EO NO.	F9
CONTROL INFO NO.	LDW 280A-7378		

ON-1:

IN B/M & F/D

LDW 280-28253-3 WAS LDW 280-28253-1

DETAIL SPEC REQ	☐	CL II ENGRG CHG	✓	CL I ENGRG CHG	☐	LCD# 1516	5

REASON FOR EO	DESCRIPTION OF EO	(R) GAEC EO RELEASE
ADDITION OF SURGE TANK PER LCD# 1516	ON-1: LDW 280-28253-3 WAS LDW 280-28253-1	JK 6/20/7 C

MODEL	EFFECTIVITY ~~PROCURING ACTIVITY NO.~~	GAEC UNIT NO.	~~SUB CONTR UNIT NO.~~
LM	LM-2 (32)		

DRAWING CHANGE REQD: REVISE DWG	RECORD EO	DISPOSITION OF PARTS: REWORK	SCRAP
✓		✓	

APPROVED BY	JAP			F.DR	JV		Dam	
DATE	6/8/67			6/7/67	6/19		6/19/67	6/20/67
5	V.D.I.	SUPPORT	RELIAB. GROUP	GROUP LEADER	STRESS GROUP	LIAISON ENGRG	PROJ ENGRG	~~GOVT~~

PRIORITY	DRAWING TITLE	DRAWING NO.	EO NO.
C	MID SECTION ASSEMBLY - ASCENT STAGE	LDW 280-52012	F9

ISSUED BY Geo. W. Rocklein x7033 6/6/67 SECTION Veh. Des. Int. GROUP NO. 335 PL 25

01

NAS 9-1100

B

ENG 32.1 REV 3-65

GRUMMAN AIRCRAFT ENGINEERING CORP.
CODE IDENT NO. 26512
ENGINEERING ORDER *

DWG. NO. LDW 280-52012
EO NO. F10
CONTROL INFO NO. LDW 280 A-8135

ON -1:

ADD LDW 280-53859-1 (IN B/M & F/D)

DETAIL SPEC REQ		CL II ENGRG CHG		CL I ENGRG CHG	✓	LCD #1752

REASON FOR EO: ADD FUSE ASSEMBLY #1, REF DESIG. 1A14, PART No. LDW 390-53055 & ASSOC. WIRING AS PER LM-3

DESCRIPTION OF EO: ON -1: ADDED LDW 280-53859-1

GAEC EO RELEASE: JK 7/25/7

MODEL	~~PROCURING ACTIVITY NO.~~	GAEC UNIT NO.	~~SUB CONTR UNIT NO.~~
LM	LM-2 (32)		

DRAWING CHANGE REQD: REVISE DWG ✓ / RECORD EO
DISPOSITION OF PARTS: REWORK ✓ / SCRAP

	V.D.I.	SUPPORT	RELIAB. GROUP	GROUP LEADER	STRESS GROUP	LIAISON ENGRG	PROJ ENGRG	~~CONT~~
APPROVED BY				FDR	EB			
DATE	7/20/67			7/20/67	7/22		7/24	7/24

PRIORITY	DRAWING TITLE	DRAWING NO.	EO NO.
C	MID SECTION ASSEMBLY- ASCENT STAGE	LDW 280-52012	F10

ISSUED BY Geo. W. Rocklein x7033 7/20/67 SECTION Veh. Des. Int. GROUP NO. 335 PL 25

01

NAS 9-1100

ENG 32.1 REV 3-65 C

GRUMMAN AIRCRAFT ENGINEERING CORP.
CODE IDENT NO. 26512
ENGINEERING ORDER

DWG. NO. LDW 280-52012 EO NO. G1
CONTROL INFO NO. LDW280B1101

IN F/D & B/M FOR -1 ADD
LDW 280-23291-1 (1 REQ'D)

DETAIL SPEC REQ	✓	CL II ENGRG CHG		CL I ENGRG CHG	

REASON FOR EO: TO CORRECT NEXT ASSY - DETAIL WAS OMITTED. (CDR LIST)

DESCRIPTION OF EO: ON -1. ADDED LDW280-23291-1 (1)

GAEC EO RELEASE: JK 1/8/68

MODEL	EFFECTIVITY: PROCURING ACTIVITY NO.	GAEC UNIT NO.	SUB CONTR UNIT NO.
LM		LM-2 (32)	

DRAWING CHANGE REQD: REVISE DWG	RECORD EO	DISPOSITION OF PARTS: REWORK	SCRAP
✓		NOT REQ'D	

	VD1	SUPPORT	RELIAB. GROUP	GROUP LEADER	STRESS GROUP	LIAISON ENGRG	PROJ ENGRG	GOVT
APPROVED BY				F.DR				
DATE	1/5/68			1-5-68	1-6		1/5/68	1-8-68

PRIORITY: C
DRAWING TITLE: MID SECTION ASSY ASCENT STAGE
DRAWING NO. LDW 280-52012
EO NO. G1

ISSUED BY F. BADE X7033 SECTION VD1 GROUP NO. 335 PL 25

01 NAS 9-1100

ENG 32.1 REV 3-68

GRUMMAN AIRCRAFT ENGINEERING CORP.
CODE IDENT NO. 26512
ENGINEERING ORDER

DWG. NO. LDW280-52012
EO NO. G2
CONTROL INFO NO. LM-5-1795 8

ON-1

RELEASED BY LIAISON

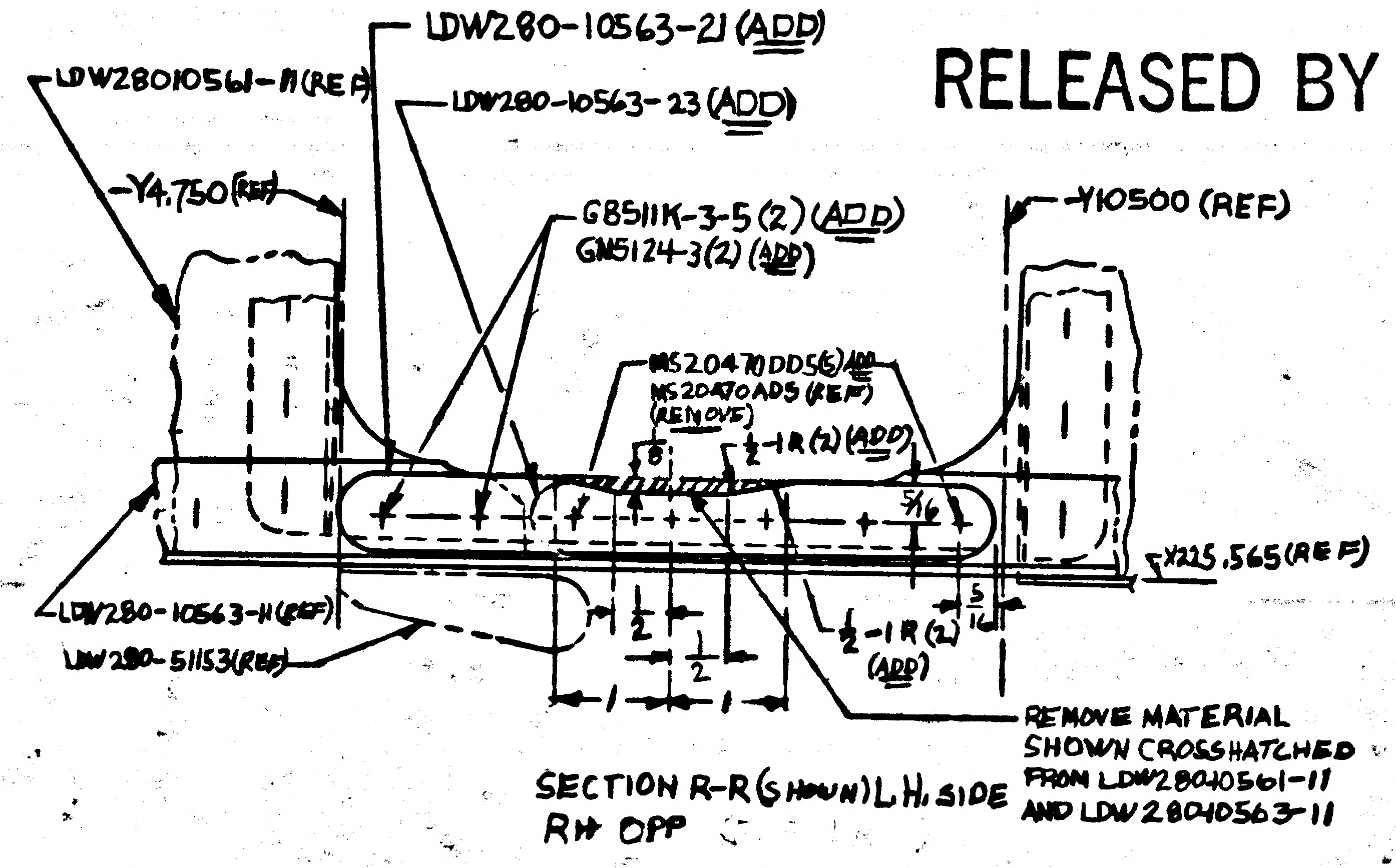
LDW280-10563-21 (ADD)
LDW28010561-11 (REF)
LDW280-10563-23 (ADD)
Y4.750 (REF)
G8511K-3-5 (2) (ADD)
GN5124-3 (2) (ADD)
Y10500 (REF)
MS20470DD5(5) ADD
MS20470AD5 (REF) (REMOVE)
1/2-1R (2) (ADD)
5/16
X225.565 (REF)
LDW280-10563-11 (REF)
LDW280-51153 (REF)
1/2
1/2
1
1
1/2-1R (2) (ADD)
5/16

REMOVE MATERIAL SHOWN CROSSHATCHED FROM LDW28010561-11 AND LDW28010563-11

SECTION R-R (SHOWN) L.H. SIDE
RH OPP

DETAIL SPEC REQ		CL II ENGRG CHG	✓	CL I ENGRG CHG	

REASON FOR EO: TO PROVIDE CLEARANCE FOR PROPELLANT LINES

DESCRIPTION OF EO: ON-1 ADDED LDW280-10563 -21 & -23, GB511K-3-5(4) GN512H-3(4), MS20470DD5(10) TRIMMED LDW280-10561-11, & LDW280-10563-11 & REMOVED MS20470AD5(10) ⑤

GAEC EO RELEASE: ✓

MODEL	PROCURING ACTIVITY NO.	GAEC UNIT NO.	SUB CONTR UNIT NO.
LM		LM-2 (32)	

DRAWING CHANGE REQD		DISPOSITION OF PARTS	
REVISE DWG	RECORD EO	REWORK	SCRAP
✓		✓	

APPROVED BY								
DATE	2/1/68	2/10/68			2/3/68	2-3-68	2/10/68	2/3/68
	S/CAT	~~SUPPORT~~ VDE	RELIAB. GROUP	GROUP LEADER	STRESS GROUP	LIAISON ENGRG	PROJ ENGRG	~~GRP~~

PRIORITY: C
DRAWING TITLE: MID SEC ASSY- ASCENT STAGE
DRAWING NO. LDW280-52012
EO NO. G2

ISSUED BY LIAISON JOHN J. BLASE 86755 SECTION VEH DES, INT GROUP NO. 335 PL 25

01 NAS 9-1100

MODEL OR END ITEM	NEXT ASSY	MODULE OR SER NO.	REQD PER MODULE OR END ITEM	MODEL OR END ITEM	NEXT ASSY	MODULE OR SER NO.	REQD PER MODULE OR END ITEM	MODEL OR END ITEM	NEXT ASSY	MODULE OR SER NO.	REQD PER MODULE OR END ITEM
								LEM	LDW280-52041	LEM-2	1 EA
PART NO.		GAEC SCH NO.		PART NO.		GAEC SCH NO.		PART NO. LDW280-52014 -1, -3, -5, & -6		GAEC SCH NO. 32-6	

SH REV STATUS: FOR DESCRIPTION OF REV SEE SUBQ SH

SHEET	1	1.10		2			3		
REV	A	A		A			A		
SHEET	4								
REV	A								
SHEET									
REV									

LAST SECT LTR USED A-A
LAST DASH NO. USED -6
GRUMMAN REL INFO
PRIM NO. K(001) MP17

UNLESS OTHERWISE SPECIFIED DIMENSIONS ARE IN INCHES.
TOLERANCE UNLESS SPECIFIED
FRACTIONS - DECIMALS - ANGLES
±1/32 ±.020 ±1/2°
ORIG DWG AUTH
DETAIL SPEC REQUIREMENT -
CLASS II ENGRG CHANGE ✓
CLASS I ENGRG CHANGE

CONTRACT NO. NAS 9-1100
LINE ITEM 1
DOCUMENTATION TYPE II
DRAWN BY M.COLEMAN LOEW 12/2/65
LAYOUT BY G.WHISTON
CHECKED BY 3.24.66
GR.LEADER Whitley 3/25/66
VEH DEH INT 3/27
STRUCTURES SEB
STRUCTURES HILDERMAN 3/28
WEIGHTS A Rohrbach 3-29
RELIABILTY
PROJ ENGR 3-29-66
REL GROUP Church 3-30-66

GRUMMAN AIRCRAFT ENGRG CORP
BETHPAGE, L. I., NEW YORK

SKIN ASSY —
ASCENT—MIDSECTION

SIZE B
CODE IDENT NO. 26512
LDW28052014 A
SCALE NONE
SHEET 1 OF 5

ENG 77.1 9-64

01

NAS 9-1100

REVISIONS

CHANGE LTR	ITEM NO.	SHEET NO.	ZONE	SH CHG LTR	GRUMMAN INFO ONLY	DET SPEC	CLASS I	CLASS II	ENGRG ORDER	DESCRIPTION	EFFECTIVITY	DISPOSITION OF EXISTING PARTS REWORK	DISPOSITION OF EXISTING PARTS SCRAP	CHANGED BY AND DATE	ENGRG APPD	APPD
A	1	1,1.10,2,3,4							E.O. A1	E.O. A1 SUPERSEDED BY EO A2.	NOTED	✓		M. LOEW 12/3/65		3/31
	2	1,1.10,2,3,4							E.O. A2	SUPERSEDES EOA1. INITIAL DRAWING RELEASE, PARTS MADE PER EO A2.	LEM-2	✓		M. LOEW 3/30/66		3-29

FOR CONTINUATION OF REVISIONS SEE SHEET

GRUMMAN AIRCRAFT ENGRG CORP, BETHPAGE, L. I., NEW YORK

SIZE	CODE IDENT NO.		
B	26512	LDW280-52014	A
SCALE NONE			SHEET 1.10

ENG 77.3 5-64

01

NAS 9-1100

QTY PER ASSEMBLY -6	-5	-3	-1	CODE IDENT	PART NO.	I&T	NOMENCLATURE OR DESCRIPTION	MATERIAL	GOVT SPEC	COML SPEC	STOCK SIZE	PROCESS SYM	FINISH NO.	ZONE
1					LDW280M10022-7	E	LONGERON	SEE DWG						5B
	1				LDW280M10022-5									5B
		1			LDW280M10021-7									10B
			1		LDW280M10021-5		LONGERON							10B
1					LDW280-10104-14		SKIN							5B
	1				LDW280-10104-13									5B
		1			LDW280-10103-17									10B
			1		LDW280-10103-15									10B
		1			LDW280-10102-14									10C
			1		LDW280-10102-13		SKIN	SEE DWG						10C
					LDW280 52014-6		SKIN ASSY	(WELDED)				AW	76	6B
					-5									6B
					-3									SH4
					LDW280 52014-1	E	SKIN ASSY	(WELDED)				AW	76	11B

SYM OR NO.	PROCESS OR FINISH	GRUMMAN SPEC OR MILITARY SPEC
AW	WELDING	LSP 14-6201
76	ALODINE	LSP 14-9010

I&T: IDENTIFICATION AND TRACEABILITY IN ACCORDANCE WITH :
NONE

GRUMMAN AIRCRAFT ENGRG CORP, BETHPAGE, L. I., NEW YORK

SIZE B
CODE IDENT NO. 26512
LDW280-52014
SCALE NONE
SHEET 2

ENG 77.2 7-65

01

NAS 9-1100

01/03 NAS 9-1100

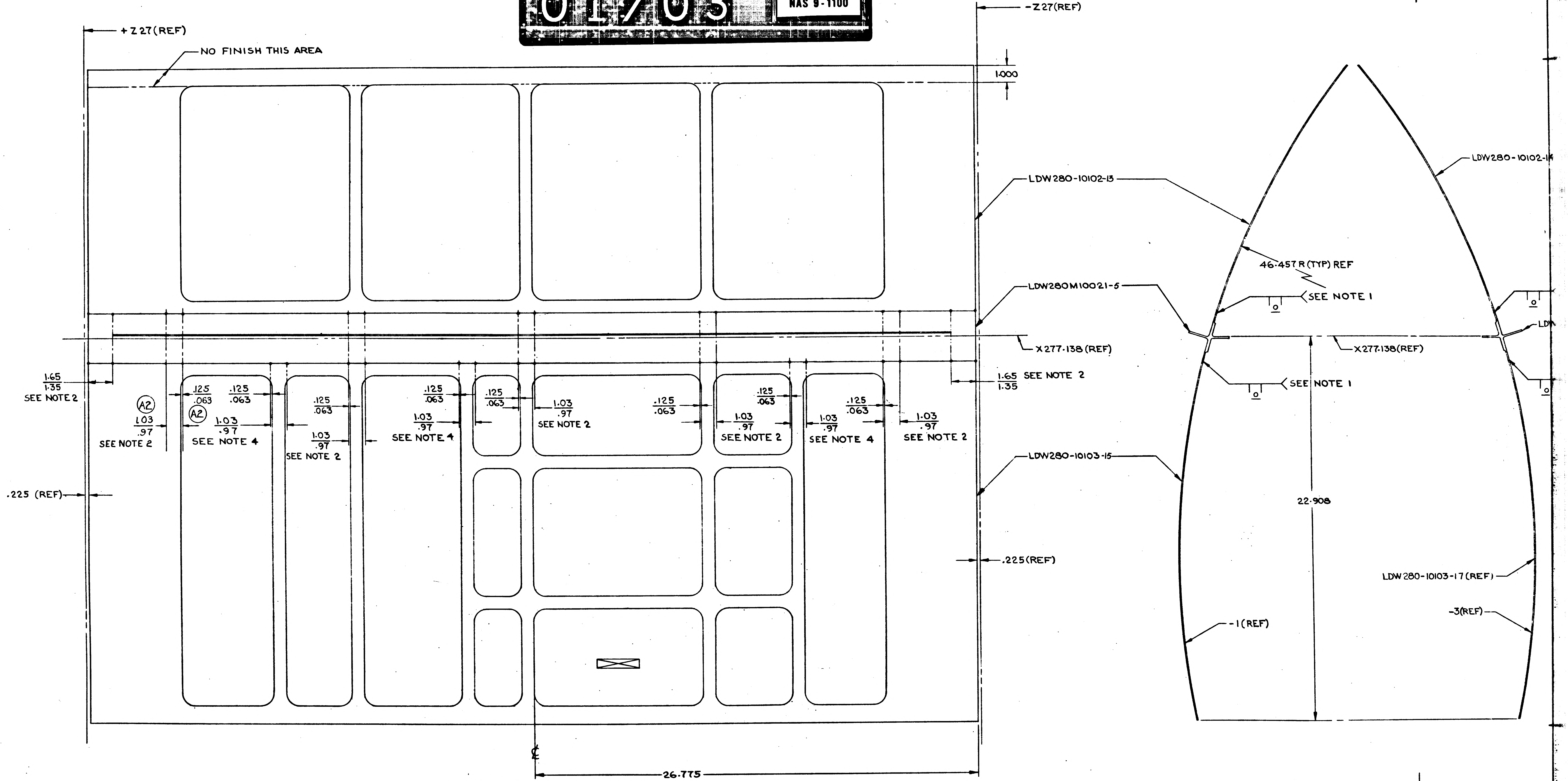
+Z27(REF)
NO FINISH THIS AREA
-Z27(REF)
1.000
LDW280-10102-13
LDW280-10102-14
46.457 R (TYP) REF
SEE NOTE 1
LDW280M10021-5
X277.138 (REF)
X277.138(REF)
1.65 / 1.35 SEE NOTE 2
A2
1.03 / .97 SEE NOTE 2
.125 / .063
1.03 / .97 SEE NOTE 4
1.03 / .97 SEE NOTE 2
.225 (REF)
LDW280-10103-15
22.908
LDW280-10103-17 (REF)
-3(REF)
-1(REF)
26.775
℄

LDW280-52014-1 ASSY (WELDED)

VIEW LOOKING INBD LH

3/3

CODE IDENT NO. 26512

LDW280—52014 SHEET 3

A
+Z 27 (REF)
-Z 27 (REF)
1.03
.97
SEE NOTE 2
.125
.063
SEE NOTF 2
LDW280M10022-5 (ON-5)
-6 (ON-6)
X253.500(REF)
X25
SEE NOTE 1
1.65
1.35
SEE NOTE 2
LDW280-10102-14
46.457 R (TYP) REF
SEE NOTE I
LDW280M10021-5 (REF)
X277.138(REF)
.225 (REF)
LDW280-10104-13(ON-5)
-14(ON-6)
46.457 R (TYP) REF
-5
22.908
LDW 280-10103-17 (REF)
-3(REF)
℄ (REF)
26.775
A (SHEET 4)

LDW280-52014-5 ASSY (WELDED) SHOWN
-6 ASSY (WELDED) OPP (EXCEPT AS SHOWN)
VIEW LOOKING INBD LH

02/03 NAS 9-1100

CODE IDENT NO. 26512
LDW280 — 52014 SHEET 3

CODE IDENT NO. 26512
LDW280 — 52014 SHEET 3

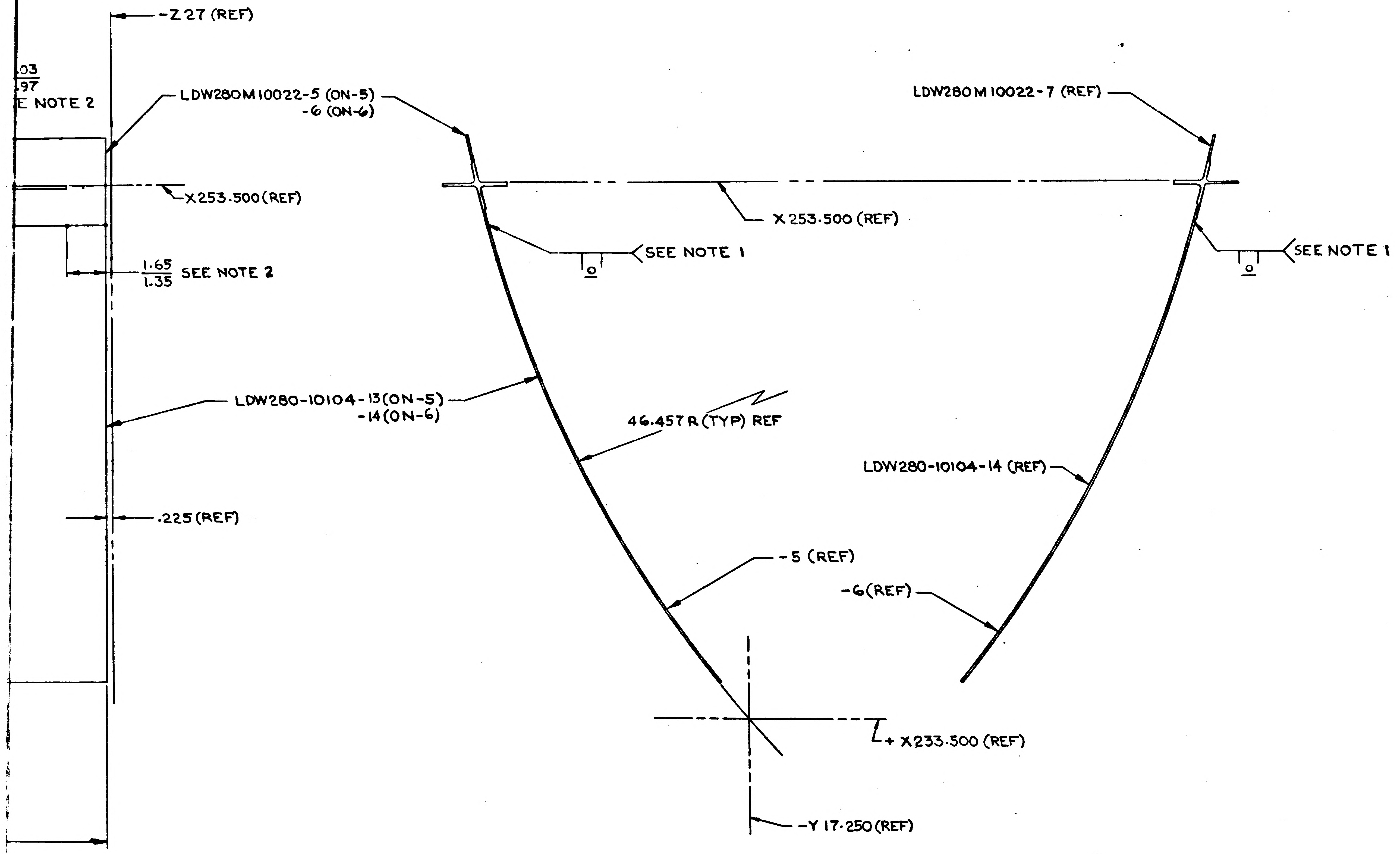
-Z 27 (REF)
.03
.97
E NOTE 2
LDW280M10022-5 (ON-5)
-6 (ON-6)
LDW280M10022-7 (REF)
X253.500 (REF)
X 253.500 (REF)
SEE NOTE 1
SEE NOTE 1
1.65
1.35
SEE NOTE 2
LDW280-10104-13 (ON-5)
-14 (ON-6)
46.457 R (TYP) REF
LDW280-10104-14 (REF)
.225 (REF)
-5 (REF)
-6 (REF)
X 233.500 (REF)
-Y 17.250 (REF)

NOTES:

1. MECHANIZED FUSION WELD PER LSP14-6201 AND INSPECT PER STD II. ANNEALED AREA ADJACENT TO WELD PERMISSIBLE.
2. GRIND WELD FLUSH $\binom{+.010}{-.000}$ IN THIS AREA - NEAR SIDE $\sqrt{125}$
3. FINISH NO. 76 EXCEPT AS NOTED IN FLD (TOP EDGE OF -1 & -3)
4. GRIND WELD FLUSH $\binom{+.010}{-.000}$ IN THIS AREA - FAR SIDE $\sqrt{125}$
5. BRUSH ALODINE SCRAPED AREA AFTER WELDING.

MANUFACTURING OPERATIONS UNLESS OTHERWISE SPECIFIED NOTES CHECKED ✓ APPLY TO THIS DWG.	
RUBBER STAMP PART NUMBER AND ALL OTHER MARKINGS IN REGION MARKED ⊠ USE BOTH SIDES IF NECESSARY.	✓
FILLET AND INSIDE CORNER RADII TOLERANCES .016R TO .062R ± .010 .063R TO .250R ± .015 OVER .250R ± .030	
DEPTH SHOWN FOR TAPPED HOLES IS FULL THDS. 2-3 IMP THDS. BEYOND PERMISSIBLE.	
EXTERNAL THREAD LENGTH SHOWN INCLUDES 2 IMPERFECT THREADS MAX.	
DO NOT CADMIUM PLATE & PAINT HOLES OR SURFACES MARKED WITH DOUBLE ASTERISK.	
MISMATCH STEP OF ± .005 PERMISSIBLE DUE TO CHANGE OF CUTTERS AT INSIDE INTERSECTING SURFACES.	
DIAMETERS MARKED MUST BE CONCENTRIC WITHIN FULL INDICATOR READING	
HOLES MUST BE KEPT FREE OF CHROME PLATING SOLUTION.	
ALL DIMENSIONS SHOWN TO BE MET AFTER CADMIUM PLATING. THICKNESS OF PLATE .0003 MIN. TO .0005 MAX. MIN. THICKNESS TO BE .0002 ON THREADED AREAS. NO ALLOWANCE FOR PLATING IN HOLES	
$\sqrt{125}$ SURFACE ROUGHNESS INCLUDING REAMED HOLES PER MIL-STD-10	
$\sqrt{200}$ FOR ALL DRILLED HOLES	
REMOVE ALL BURRS. BREAK ALL EDGES .015-.031	
INSPECTION INFORMATION MINIMUM PERMISSIBLE AVERAGE EDGE DISTANCE MARKED IS	
SYMBOL $\sqrt{}$ DENOTES SURFACE TO BE MACHINED	
UNLESS OTHERWISE SPECIFIED TOLERANCE ON FLANGES IS ± 1/32	
LENGTHS OF AN, NAS & MS AL ALY RIVETS SHORTER THAN 1 INCH ARE NOT SPECIFIED.	
TOLERANCE ON LOFTED DELINEATIONS IS	

DWG SIZE 28 X 125

PRINTING INFO ONLY

FULL SIZE SHEET AREA (30 X 127) ——— 26.5 SQ. FT.

1/2 SIZE SHEET AREA (1/4 OF FULL) ——— 6.6 SQ. FT.

PRINT TRIM LINE

LDW280-52014 A

LDW280-52014 A

03/03

NAS 9-1100

CODE IDENT NO. 26512
LDW280 - 52014 SHEET 3

GRUMMAN AIRCRAFT ENGRG CORP., BETHPAGE, L. I., NEW YORK
LEM
MODEL OR END ITEM
SIZE H
CODE IDENT NO. 26512
LDW280-52014 A
SCALE 1/2
SHEET 3

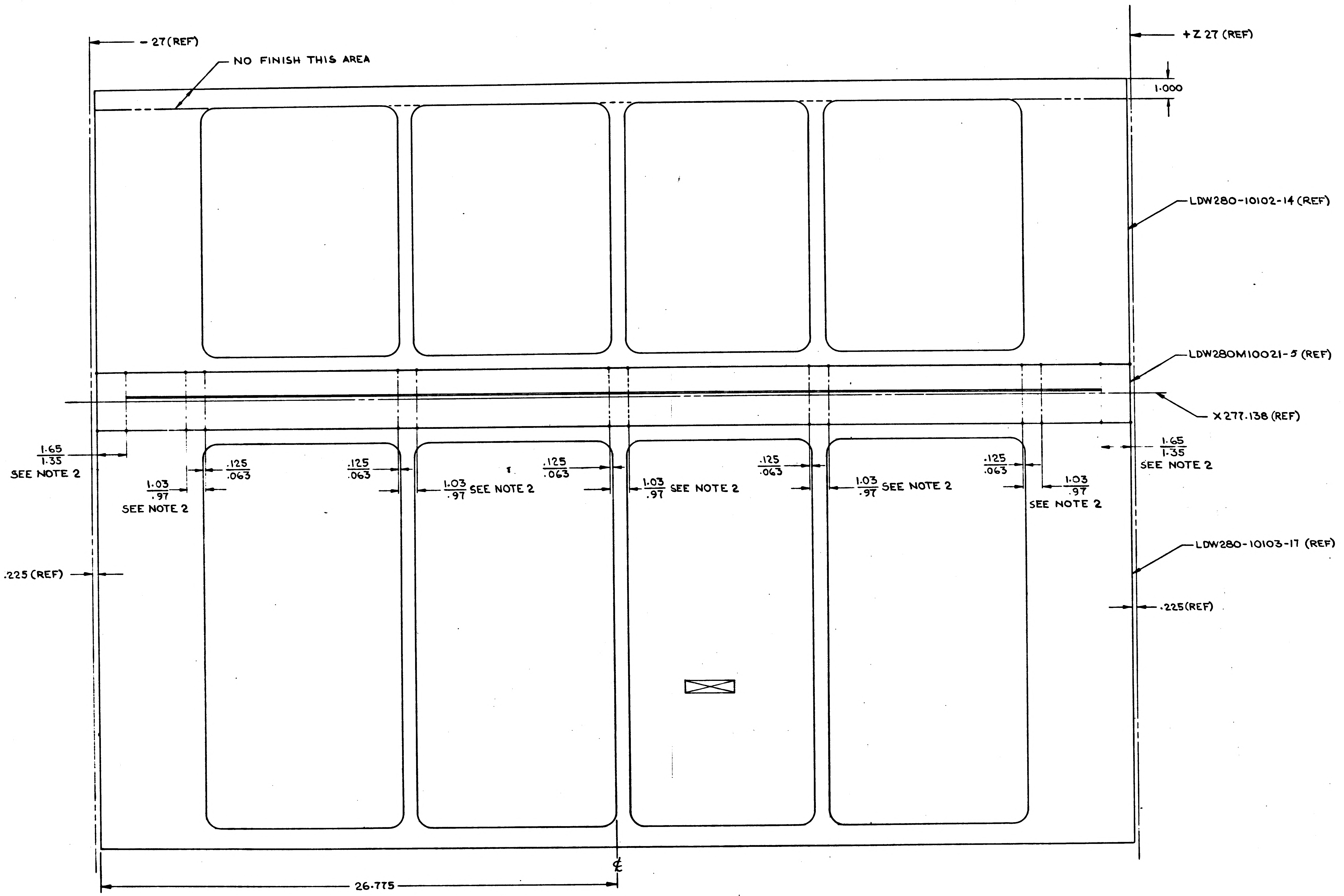

VIEW A-A

LDW280-52014-3 ASSY (WELDED)

VIEW LOOKING INBD RH

MANUFACTURING OPERATIONS UNLESS OTHERWISE SPECIFIED NOTES CHECKED √ APPLY TO THIS DWG.	
RUBBER STAMP PART NUMBER AND ALL OTHER MARKINGS IN REGION MARKED ⊠ USE BOTH SIDES IF NECESSARY.	√
FILLET AND INSIDE CORNER RADII TOLERANCES .016R TO .062R ± .010 .063R TO .250R ± .015 OVER .250R ± .030	
DEPTH SHOWN FOR TAPPED HOLES IS FULL THDS. 2-3 IMP THDS. BEYOND PERMISSIBLE.	
EXTERNAL THREAD LENGTH SHOWN INCLUDES 2 IMPERFECT THREADS MAX.	
DO NOT CADMIUM PLATE & PAINT HOLES OR SURFACES MARKED WITH DOUBLE ASTERISK.	
MISMATCH STEP OF ± .005 PERMISSIBLE DUE TO CHANGE OF CUTTERS AT INSIDE INTERSECTING SURFACES.	
DIAMETERS MARKED MUST BE CONCENTRIC WITHIN FULL INDICATOR READING	
HOLES MUST BE KEPT FREE OF CHROME PLATING SOLUTION.	
ALL DIMENSIONS SHOWN TO BE MET AFTER CADMIUM PLATING. THICKNESS OF PLATE .0003 MIN. TO .0005 MAX. MIN. THICKNESS TO BE .0002 ON THREADED AREAS. NO ALLOWANCE FOR PLATING IN HOLES	
125 √ SURFACE ROUGHNESS INCLUDING REAMED HOLES PER MIL-STD-10	
200 √ FOR ALL DRILLED HOLES	
REMOVE ALL BURRS. BREAK ALL EDGES .005-.031	
INSPECTION INFORMATION MINIMUM PERMISSIBLE AVERAGE EDGE DISTANCE MARKED IS	
SYMBOL √ DENOTES SURFACE TO BE MACHINED	
UNLESS OTHERWISE SPECIFIED TOLERANCE ON FLANGES IS ± 1/32	
LENGTHS OF AN, NAS & MS AL ALY RIVETS SHORTER THAN 1 INCH ARE NOT SPECIFIED.	
TOLERANCE ON LOFTED DELINEATIONS IS	

01

NAS 9-1100

GRUMMAN AIRCRAFT ENGRG CORP., BETHPAGE, L. I., NEW YORK

MODEL OR END ITEM	SIZE	CODE IDENT NO.	
LEM	E	26512	LDW280-52014
	SCALE 1/2		SHEET 4

LDW280-52014

ENG 32.1 REV 3-65

B

GRUMMAN AIRCRAFT ENGINEERING CORP.
CODE IDENT NO. 26512
ENGINEERING ORDER

*

DWG. NO.	LDW280-52014	EO NO.	B1
CONTROL INFO NO.	LM5-13287		

ON -5 & -6 ASSY IN F/D & B/M
REMOVE LDW280M10022 -5 & -7
ADD LDW280M10022 -13 & -15 RESPECTIVELY

ON -1 ASSY IN F/D & B/M
REMOVE LDW280M10021 -5
ADD LDW280M10021-11

RELEASED BY LIAISON

DETAIL SPEC REQ	☐	CL II ENGRG CHG	☑	CL I ENGRG CHG	☐	LCD-1552 5

REASON FOR EO	DESCRIPTION OF EO	GAEC EO RELEASE
TO REMOVE PHYSICAL HAZARDS FROM CREW COMPARTMENT	ON-5 & -6 REMOVED LDW280M10022-5 & -7 & ADDED LDW280M 10022-13 & -15 RESPECTIVELY – ON-1 REMOVED LDW280M10021-5 & ADDED LDW280M 10021-11	C JK

MODEL	EFFECTIVITY: PROCURING ACTIVITY NO.	GAEC UNIT NO.	SUB CONTR UNIT NO.
LM		LM-2 (32)	

DRAWING CHANGE REQD: REVISE DWG	RECORD EO	DISPOSITION OF PARTS: REWORK	SCRAP
✓		✓	

	VDI	SUPPORT	RELIAB. GROUP	GROUP LEADER	STRESS GROUP	LIAISON ENGRG	PROJ ENGRG	~~GOVT~~
APPROVED BY	WT			~			DAME	
DATE	5/17/67			~	5/17/67	5/18/67	5-19-67	5/18/67

PRIORITY	DRAWING TITLE	DRAWING NO.	EO NO.
C	SKIN ASSY ASCENT STAGE ~ MID-SECTION	LDW280-52014	B1

ISSUED BY W. TRAUT x6510 SECTION VDI GROUP NO. 335 PL 5

01 NAS 9-1100

MODEL OR END ITEM	NEXT ASSY	MODULE OR SER NO.	REQD PER MODULE OR END ITEM

PART NO.

GAEC SCH NO.

MODEL OR END ITEM	NEXT ASSY	MODULE OR SER NO.	REQD PER MODULE OR END ITEM

PART NO.

GAEC SCH NO.

MODEL OR END ITEM	NEXT ASSY	MODULE OR SER NO.	REQD PER MODULE OR END ITEM
LEM	LDW280-52011	LEM-2(32)	1

PART NO. LDW 280-52016-1

GAEC SCH NO. 31-4

(3)

SH REV STATUS: FOR DESCRIPTION OF REV SEE SUBQ SH

SHEET	1		2	3					
REV									
SHEET									
REV									
SHEET									
REV									

LAST SECT LTR USED

LAST DASH NO. USED -1

GRUMMAN REL INFO			
PRIM NO.	LE(001)		
215	PP/0		

UNLESS OTHERWISE SPECIFIED DIMENSIONS ARE IN INCHES.
TOLERANCE UNLESS SPECIFIED
FRACTIONS - DECIMALS - ANGLES
±1/32 ±.020 ±1/2°

ORIG DWG AUTH

DETAIL SPEC REQUIREMENT

CLASS II ENGRG CHANGE

CLASS I ENGRG CHANGE

CONTRACT NO. NAS9-1100

LINE ITEM #1

DOCUMENTATION TYPE II

DRAWN BY	M. PALERMO 10-15-65	RELIABILITY	
LAYOUT BY	E.L. HARRIGAN 10-19-65		
CHECKED BY	EJR 10-19-65		
GP LEADER	J. Pusateri 10/19		
VEH DES INT	[illegible] 10/20		
STRUCTURES	FEB 10/21	PROJ ENGR	[illegible] 10/25
STRUCTURES	[illegible] 10-22	REL GROUP	Lippincott 10/26/65
WEIGHTS	[illegible] 10-22		

GRUMMAN AIRCRAFT ENGRG CORP
BETHPAGE, L. I., NEW YORK

PANEL ASSEMBLY
ASCENT STAGE - FRONT FACE - CENTER

SIZE B

CODE IDENT NO. 26512

LDW280-52016

SCALE NONE

SHEET 1 OF 4

ENG 77.1 9-64

01

NAS 9-1100

QTY PER ASSEMBLY						-1	CODE IDENT	PART NO.	I&T	NOMENCLATURE OR DESCRIPTION	MATERIAL	GOVT SPEC	COML SPEC	STOCK SIZE	PROCESS SYM	FINISH NO.	ZONE
						1		LDW280M10066-3	E	PANEL	SEE DWG.						
						1		LDW280M10010-7	↑	PANEL	SEE DWG						
						1		LDW280-10119-17		PANEL	SEE DWG.						
									↓								
								LDW280-52016-1	E	PANEL ASSEMBLY	(WELDED)				NOTE 3	NONE	

SYM OR NO.	PROCESS OR FINISH	GRUMMAN SPEC OR MILITARY SPEC	SYM OR NO.	PROCESS OR FINISH	GRUMMAN SPEC OR MILITARY SPEC	SYM OR NO.	PROCESS OR FINISH	GRUMMAN SPEC OR MILITARY SPEC

I & T: IDENTIFICATION AND TRACEABILITY IN ACCORDANCE WITH : NONE

GRUMMAN AIRCRAFT ENGRG CORP, BETHPAGE, L. I., NEW YORK

SIZE B
CODE IDENT NO. 26512
LDW28Q-52016

SCALE NONE
SHEET 2

ENG 77.2 7-65

01

NAS 9-1100

NOTES:
1. TABS TO BE TRIMMED AFTER WELDING AS SHOWN.
2. GRIND FLUSH FOR DISTANCE SHOWN.
3. MECHANIZED FUSION WELD PER LSP14-6201 AND INSPECT PER STD. II
4. NO TOOLING HOLES PERMITTED IN PARTS.
5. BRUSH ALODINE SCRAPED AREA AFTER WELDING, PER LSP14-9010.

MANUFACTURING OPERATIONS UNLESS OTHERWISE SPECIFIED NOTES CHECKED √ APPLY TO THIS DWG.	
RUBBER STAMP PART NUMBER AND ALL OTHER MARKINGS IN REGION MARKED ⊠ USE BOTH SIDES IF NECESSARY.	✓
FILLET AND INSIDE CORNER RADII TOLERANCES .016R TO .062R ± .010 .063R TO .250R ± .015 OVER .250R ± .030	
DEPTH SHOWN FOR TAPPED HOLES IS FULL THDS. 2-3 IMP THDS. BEYOND PERMISSIBLE.	
EXTERNAL THREAD LENGTH SHOWN INCLUDES 2 IMPERFECT THREADS MAX.	
DO NOT CADMIUM PLATE & PAINT HOLES OR SURFACES MARKED WITH DOUBLE ASTERISK.	
MISMATCH STEP OF ± .005 PERMISSIBLE DUE TO CHANGE OF CUTTERS AT INSIDE INTERSECTING SURFACES.	
DIAMETERS MARKED MUST BE CONCENTRIC WITHIN FULL INDICATOR READING	
HOLES MUST BE KEPT FREE OF CHROME PLATING SOLUTION.	
ALL DIMENSIONS SHOWN TO BE MET AFTER CADMIUM PLATING. THICKNESS OF PLATE .0003 MIN. TO .0005 MAX. MIN. THICKNESS TO BE .0002 ON THREADED AREAS. NO ALLOWANCE FOR PLATING IN HOLES	
125 SURFACE ROUGHNESS INCLUDING REAMED HOLES PER MIL-STD-10	
200 FOR ALL DRILLED HOLES	
REMOVE ALL BURRS. BREAK ALL EDGES .015-.031	
INSPECTION INFORMATION MINIMUM PERMISSIBLE AVERAGE EDGE DISTANCE MARKED IS	
SYMBOL √ DENOTES SURFACE TO BE MACHINED	
UNLESS OTHERWISE SPECIFIED TOLERANCE ON FLANGES IS ± 1/32	
LENGTHS OF AN, NAS & MS AL ALY RIVETS SHORTER THAN 1 INCH ARE NOT SPECIFIED.	
TOLERANCE ON LOFTED DELINEATIONS IS	

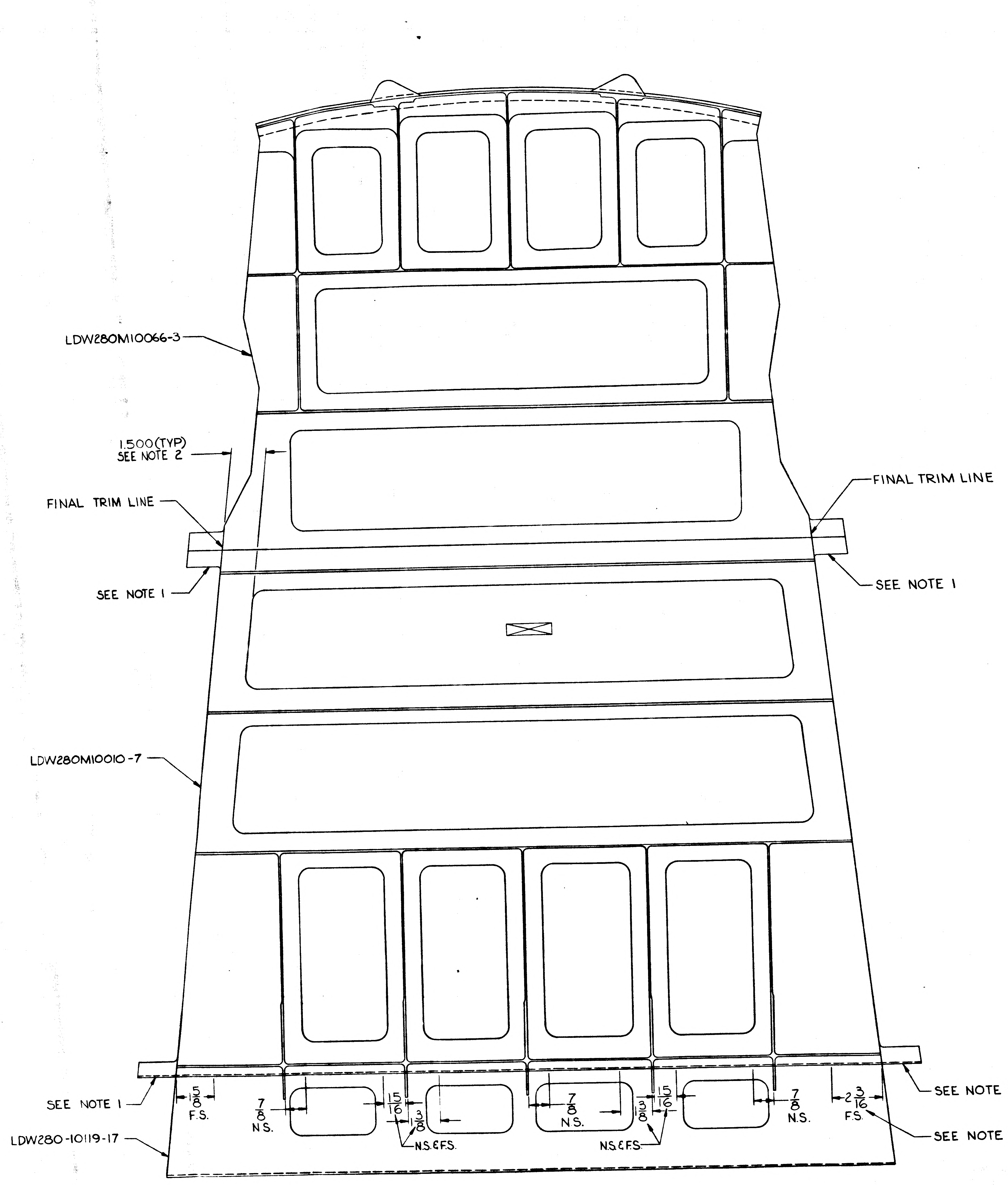
LDW280M10066-3
1.500 (TYP)
SEE NOTE 2
FINAL TRIM LINE
FINAL TRIM LINE
SEE NOTE 1
SEE NOTE 1
LDW280M10010-7
SEE NOTE 1
SEE NOTE 1
1 5/8 F.S.
7/8 N.S.
15/16
1 3/8
N.S.&F.S.
7/8 N.S.
1 3/8
15/16
N.S.&F.S.
7/8 N.S.
2 3/16 F.S.
SEE NOTE 2 (TYP) (9 PL.)
LDW280-10119-17

LDW280-52016-1 ASSY (WELDED)

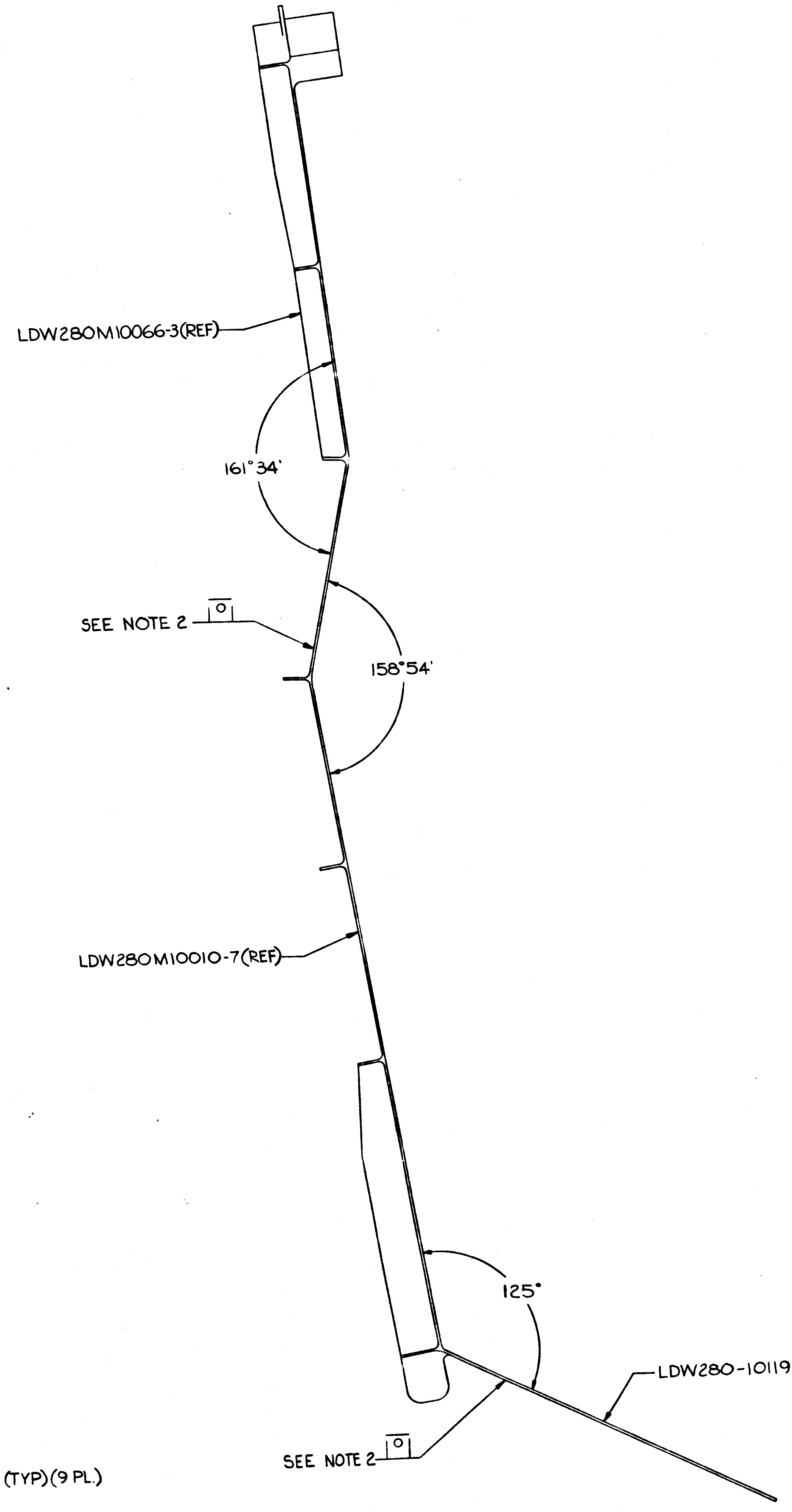
LDW280M10066-3(REF)
161°34'
SEE NOTE 2
158°54'
LDW280M10010-7(REF)
125°
LDW280-10119-17(REF)
SEE NOTE 2

NAS 9-1100

GRUMMAN AIRCRAFT ENGRG CORP., BETHPAGE, L. I., NEW YORK

	SIZE	CODE IDENT NO.	
LEM	E	26512	LDW280-52016
MODEL OR END ITEM	SCALE HALF		SHEET 3

MODEL OR END ITEM	NEXT ASSY	MODULE OR SER NO.	REQD PER MODULE OR END ITEM	MODEL OR END ITEM	NEXT ASSY	MODULE OR SER NO.	REQD PER MODULE OR END ITEM	MODEL OR END ITEM	NEXT ASSY	MODULE OR SER NO.	REQD PER MODULE OR END ITEM
								LEM	LDW280-52041	LEM-2(3)	1
PART NO.		GAEC SCH NO.		PART NO.		GAEC SCH NO.		PART NO. LDW280-52017-1		GAEC SCH NO. 32-6	

3

SH REV STATUS: FOR DESCRIPTION OF REV SEE SUBQ SH

SHEET	1.00	1.10	2.00	3.00						
REV	A	A	A	A						
SHEET										
REV										
SHEET										
REV										

LAST SECT LTR USED	B	GRUMMAN REL INFO			
LAST DASH NO. USED	- 1	PRIM NO.	6001		
		215	MP12	A	

UNLESS OTHERWISE SPECIFIED DIMENSIONS ARE IN INCHES.
TOLERANCE UNLESS SPECIFIED
FRACTIONS - DECIMALS – ANGLES
± 1/64 ±.010 ± 1/2°

ORIG DWG AUTH	
DETAIL SPEC REQUIREMENT	
CLASS II ENGRG CHANGE	
CLASS I ENGRG CHANGE	

CONTRACT NO. NAS 9-1100
LINE ITEM I
DOCUMENTATION TYPE II

DRAWN BY	ARATOLI 4-4-66	RELIABILITY	
LAYOUT BY	E.L. HARRIGAN		
CHECKED BY	EG 4-7-66		
GR LEADER	Phillips 4/12/66		
VEH DES INT	4/13		
STRUCTURE	Bu 4/25	PROJ ENGR	4-28
STRUCTURE	Hilderman 4/25	REL GROUP	A. Carnevale 5-2
WEIGHTS	Lamonte 4-28		

GRUMMAN AIRCRAFT ENGRG CORP
BETHPAGE, L. I., NEW YORK

DECK ASSEMBLY
ASCENT STAGE X294 - DOCKING

SIZE	CODE IDENT NO.		
B	26512	LDW280-52017	A
SCALE	NONE	SHEET 1.00 OF 4	

ENG 77.1 9-64

01

NAS 9-1100

REVISIONS

CHANGE LTR	ITEM NO.	SHEET NO.	ZONE	GRUMMAN INFO ONLY	DET SPEC	CLASS I	CLASS II	ENGRG ORDER	DESCRIPTION	EFFECTIVITY	DISPOSITION OF EXISTING PARTS		CHANGED BY AND DATE	ENGRG APPD	APPD
											REWORK	SCRAP			
A	1	1.00 1.10						EO A1	SUPERSEDED BY EO A2	NOTED	NOT	REQ'D	ARATOLI 4-4-66		
	2	2.00 & 3.00						EO A2	SUPERSEDES EO A1 EO A1 INITIAL DWG RELEASE PARTS MADE AS PER EO						

FOR CONTINUATION OF REVISIONS SEE SHEET ____

ENG 77.3 5-65

GRUMMAN AIRCRAFT ENGRG CORP, BETHPAGE, L. I., NEW YORK

SIZE	CODE IDENT NO.		
B	26512	LDW280-52017	A
SCALE NONE			SHEET 1, 10

01

NAS 9-1100

QTY PER ASSEMBLY -1	CODE IDENT	PART NO.	I&T	NOMENCLATURE OR DESCRIPTION	MATERIAL	GOVT SPEC	COML SPEC	STOCK SIZE	PROCESS SYM	FINISH NO.	ZONE
1		LDW280M10004-3	E	DECK	SEE DWG						
1		LDW280-52022-1	E	TUNNEL ASSY	SEE DWG						
		LDW280-52017-1	E	DECK ASSY(WELDED)					NOTE 2	NOTES	

SYM OR NO.	PROCESS OR FINISH	GRUMMAN SPEC OR MILITARY SPEC	SYM OR NO.	PROCESS OR FINISH	GRUMMAN SPEC OR MILITARY SPEC	SYM OR NO.	PROCESS OR FINISH	GRUMMAN SPEC OR MILITARY SPEC
						76	ALODINE	LSP14-9010

I & T: IDENTIFICATION AND TRACEABILITY IN ACCORDANCE WITH : NONE

GRUMMAN AIRCRAFT ENGRG CORP, BETHPAGE, L. I., NEW YORK

SIZE	CODE IDENT NO.		
B	26512	LDW280-52017	A
SCALE NONE			SHEET 2.00

ENG 77.2 7-65

01

NAS 9-1100

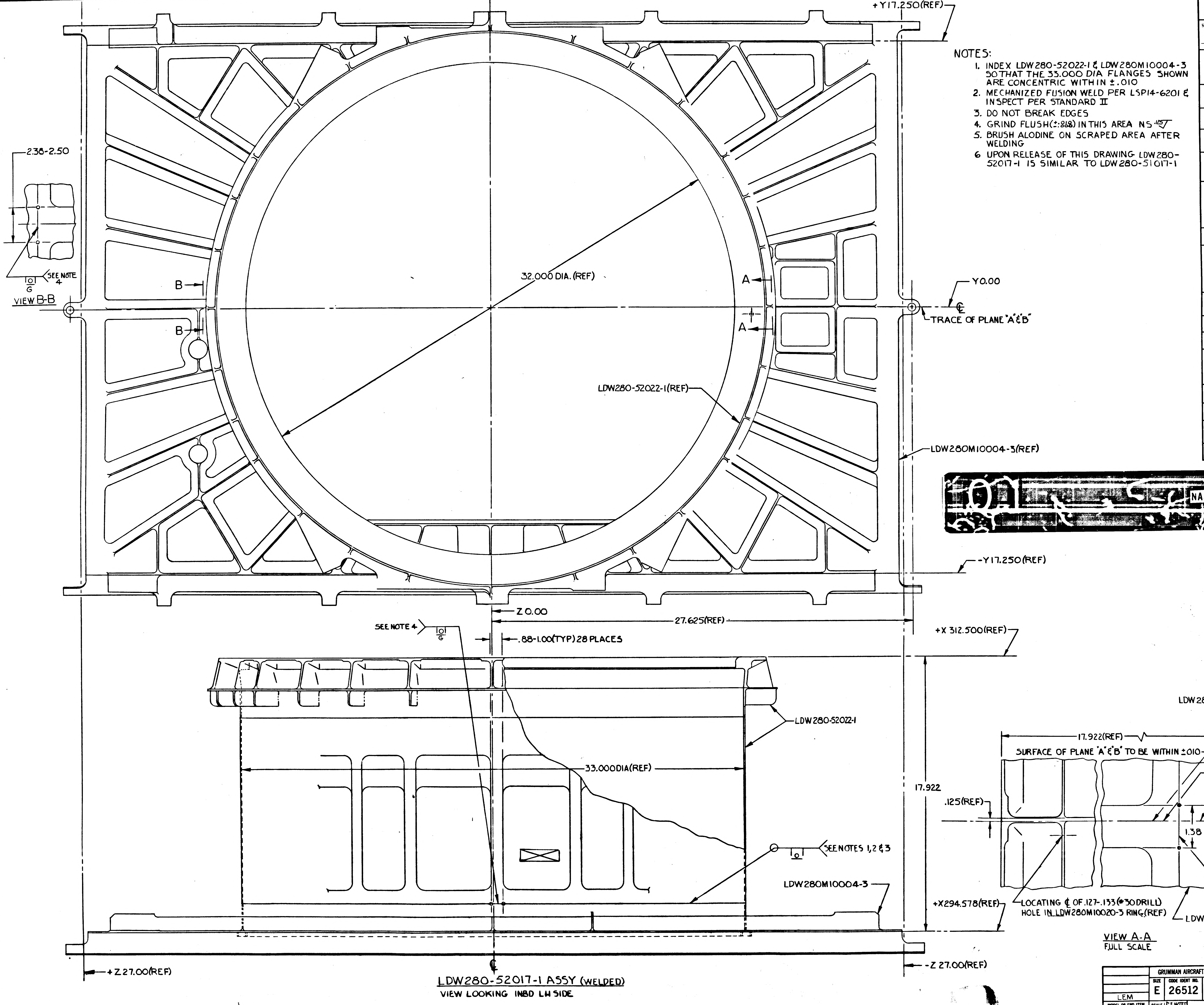

+Y17.250(REF)
2.38-2.50
SEE NOTE 4
VIEW B-B
B
B
32.000 DIA.(REF)
A
A
Y0.00
℄
TRACE OF PLANE "A"&"B"
LDW280-52022-1(REF)
LDW280M10004-3(REF)
-Y17.250(REF)
Z0.00
27.625(REF)
SEE NOTE 4
.88-1.00(TYP) 28 PLACES
+X 312.500(REF)
LDW280-52022-1
33.000DIA(REF)
17.922
SEE NOTES 1,2 & 3
LDW280M10004-3
+X294.578(REF)
+Z 27.00(REF)
-Z 27.00(REF)
℄
LDW280M10004-3(REF)
17.922(REF)
SURFACE OF PLANE "A"&"B" TO BE WITHIN ±.010
PLANE "B"
PLANE "A"
.125(REF)
.050(REF)
1.38
℄(REF)
SEE NOTE 4
LOCATING ℄ OF .127-.133(#30 DRILL) HOLE IN LDW280M10020-3 RING(REF)
LDW280-52022-1 (REF)

LDW280-52017-1 ASSY (WELDED)
VIEW LOOKING INBD LH SIDE

VIEW A-A
FULL SCALE

NOTES:

1. INDEX LDW280-52022-1 & LDW280M10004-3 SO THAT THE 33.000 DIA FLANGES SHOWN ARE CONCENTRIC WITHIN ±.010
2. MECHANIZED FUSION WELD PER LSP14-6201 & INSPECT PER STANDARD II
3. DO NOT BREAK EDGES
4. GRIND FLUSH(±.010/.008) IN THIS AREA NS 125√
5. BRUSH ALODINE ON SCRAPED AREA AFTER WELDING
6 UPON RELEASE OF THIS DRAWING LDW280-52017-1 IS SIMILAR TO LDW280-51017-1

MANUFACTURING OPERATIONS UNLESS OTHERWISE SPECIFIED NOTES CHECKED √ APPLY TO THIS DWG.	
RUBBER STAMP PART NUMBER AND ALL OTHER MARKINGS IN REGION MARKED ⊠ ~~USE BOTH SIDES IF NECESSARY.~~	√
FILLET AND INSIDE CORNER RADII TOLERANCES .016R TO .062R ± .010 .063R TO .250R ± .015 OVER .250R ± .030	
DEPTH SHOWN FOR TAPPED HOLES IS FULL THDS. 2-3 IMP THDS. BEYOND PERMISSIBLE.	
EXTERNAL THREAD LENGTH SHOWN INCLUDES 2 IMPERFECT THREADS MAX.	
DO NOT CADMIUM PLATE & PAINT HOLES OR SURFACES MARKED WITH DOUBLE ASTERISK.	
MISMATCH STEP OF ± .005 PERMISSIBLE DUE TO CHANGE OF CUTTERS AT INSIDE INTERSECTING SURFACES.	
DIAMETERS MARKED MUST BE CONCENTRIC WITHIN FULL INDICATOR READING	
HOLES MUST BE KEPT FREE OF CHROME PLATING SOLUTION.	
ALL DIMENSIONS SHOWN TO BE MET AFTER CADMIUM PLATING. THICKNESS OF PLATE .0003 MIN. TO .0005 MAX. MIN. THICKNESS TO BE .0002 ON THREADED AREAS. NO ALLOWANCE FOR PLATING IN HOLES	
125√ SURFACE ROUGHNESS INCLUDING REAMED HOLES PER MIL-STD-10	
200√ FOR ALL DRILLED HOLES	
REMOVE ALL BURRS. BREAK ALL EDGES .015-.031	
INSPECTION INFORMATION MINIMUM PERMISSIBLE AVERAGE EDGE DISTANCE MARKED IS	
SYMBOL √ DENOTES SURFACE TO BE MACHINED	
UNLESS OTHERWISE SPECIFIED TOLERANCE ON FLANGES IS ± 1/32	
LENGTHS OF AN, NAS & MS AL ALY RIVETS SHORTER THAN 1 INCH ARE NOT SPECIFIED.	
TOLERANCE ON LOFTED DELINEATIONS IS	

NAS 9 - 1100

	GRUMMAN AIRCRAFT ENGRG CORP., BETHPAGE, L. I., NEW YORK			
LEM	SIZE E	CODE IDENT NO. 26512	LDW280-52017	A
MODEL OR END ITEM	SCALE 1/2 & NOTED		SHEET 3.00	

					-3	-1	CODE IDENT	PART NO.	I&T	NOMENCLATURE OR DESCRIPTION	MATERIAL	GOVT SPEC	COML SPEC	STOCK SIZE	PROCESS SYM	FINISH NO.	ZONE
						1		LDW280-10133-16	E	RING	SEE DWG						22A
						1		-15									10A
						1		-12									24A
						1		LDW280-10133-11		RING							8A
						1		LDW280-10132-16		CLIP							24D
						1		-15									8D
						7		-14									8D
						7		-13		CLIP							8B
						8		-12		STIFFENER							8D
						8		LDW280-10132-11		STIFFENER							8B
						1		LDW 280-10131-17		RING							52A
						1		LDW 280-10131-15		RING							51A
						2		LDW280-10128-18		STIFFENER							22B
						2		-17									10B
						2		-16									22C
						1		-15									10C
						2		-14									22C
						2		-13									10C
						2		-12									22D
						2		LDW280-10128-11		STIFFENER	SEE DWG						10D
						1		LDW280-52020-3		SKIN, DECK, BHD ASSY					NONE	NONE	10A
								LDW 280-52020-1	E	MID SECT-SUB ASSY					NONE	NONE	10A
QTY PER ASSEMBLY																	

SYM OR NO.	PROCESS OR FINISH	GRUMMAN SPEC OR MILITARY SPEC	SYM OR NO.	PROCESS OR FINISH	GRUMMAN SPEC OR MILITARY SPEC	SYM OR NO.	PROCESS OR FINISH	GRUMMAN SPEC OR MILITARY SPEC

I & T: IDENTIFICATION AND TRACEABILITY IN ACCORDANCE WITH : NONE

GRUMMAN AIRCRAFT ENGRG CORP, BETHPAGE, L. I., NEW YORK

SIZE	CODE IDENT NO.		
B	26512	LDW280-52020	A

SCALE NONE

SHEET 2.00

ENG 77.2 7-65

01

NAS 9-1100

QTY PER ASSEMBLY							CODE IDENT	PART NO.	I&T	NOMENCLATURE OR DESCRIPTION	MATERIAL	GOVT SPEC	COML SPEC	STOCK SIZE	PROCESS SYM	FINISH NO.	ZONE
					-3	-1											
						1		LDW280-10349-13	E	ANGLE	SEE DWG						7A
						1		LDW280-10349-11		BRACKET							7A
						1		LDW280-10334-12		STRAP							36A
						1		LDW280-10334-11		STRAP							36A
						1		LDW280-10300-11		CLIP							52B
						2		LDW280-10281-13		CLIP							11C
						1		LDW280-10278-18		STIFFENER							22A
						1		-17		STIFFENER.							10A
						2		-15		CLIP							11A
						21		-13		STRAP							10A
						3		-12		STIFFENER							22A
						3		LDW280-10278-11		STIFFENER							10A
						1		LDW280-10160-11		BEAM							51A
						3		LDW280-10137-14		RING							24B
						3		LDW280-10137-13		RING							9B
						2		LDW280-10135-18		RING							9A
						3		-17									9A
						3		-16									9D
						3		LDW280-10135-15		RING							9D
						2		LDW280-10134-14		RING							10C
						2		-13									8C
						2		-12									10C
						2		LDW280-10134-11	E	RING	SEE DWG						8D

SYM OR NO.	PROCESS OR FINISH	GRUMMAN SPEC OR MILITARY SPEC	SYM OR NO.	PROCESS OR FINISH	GRUMMAN SPEC OR MILITARY SPEC	SYM OR NO.	PROCESS OR FINISH	GRUMMAN SPEC OR MILITARY SPEC

I & T: IDENTIFICATION AND TRACEABILITY IN ACCORDANCE WITH : NONE

GRUMMAN AIRCRAFT ENGRG CORP, BETHPAGE, L. I., NEW YORK

SIZE	CODE IDENT NO.		
B	26512	LDW280-52020	A
SCALE NONE		SHEET 2.01	

ENG 77.2 7-66

01

NAS 9-1100

REVISIONS

CHANGE LTR	ITEM NO.	SHEET NO.	ZONE	SH ~~CHG LTR~~	GRUMMAN INFO ONLY	DET SPEC	CLASS I	CLASS II	ENGRG ORDER	DESCRIPTION	EFFECTIVITY	DISPOSITION OF EXISTING PARTS		CHANGED BY AND DATE	ENGRG APPD	GOVT APPD
												REWORK	SCRAP			
A	1	1						✓	EO A1	EO A1 INITIAL DRAWING RELEASE PARTS MADE PER EO , ADDED NOTE 12	NOTED			J. BIANCHINO 1-18-66		
	2	4						✓	EO A2	ADDED 7/16 SPOTFACE, 1/16 COR. R TO FLAT ON LDW 280-10134-12 & -11	NOTED	✓				
	3	5						✓	EO A3	IN VIEW D-D CORRECTED PICTURE OF LDW280-10226-23 TO AGREE WITH DETAIL	NOTED	✓				
	4	3	8A					✓	EO A4	HL18-5-5 ON-1, HL18-5-4(10) ON-3), HL70-5 (1) ON-1, (10) ON-3, 659013-8 (1) ON-1, (10) ON-3, GW10G2 (1) ON-1 (10) ON-3, WAS 75LP-E5-3(1) ON-1 & 75LP-E5-2 (10) ON-3, NAS 1080D5(1) ON-1, (10) ON-3, 5-147 (1) ON-1, (10) ON-3, FOR VIEW E-E & G-G	NOTED	✓				
	5	5	37C					✓	EO A5	IN FIELD & B/M GB511F3-3 (2) & GN512G-3 (2) WAS NAS 1526-3 (2), NAS 1080D6 (2) DELETED NOTES 6, 7, 8, 9, & 10, ADDED NOTE 13	NOTED	✓				
	6	4						✓		REF E.O A2 COUNTER BORE WAS SPOTFACE	NOT REQD	NOT REQD				
B	1	1.00, 1.10, 3.00, 5.00	11D 37B 37C						EOB1	IN FIELD VIEW E-E ZONE 11D AT X 280.954 SECTION AB-AB WAS SECTION AC-AC.	NOT REQD	NOT	REQD	M Jacholik 8-30-66		
	2	1.00, 1.10, 2.04, 2.05, 3.00, 4.00	7C 7D 25C 25D						EOB2	IN FIELD & B/M FOR-3 HL10V-5-5(1), HL10V-5-4 (11) 659013-8 (12) NS, GW10G-2 (12) NS, HL70-5 (12), (ON-3) WAS 75LPE5-2(11), 75LPE5-3(1), HD NS, NAS1080D5(12), 5-147(12) (ON-3).	LEM-2	✓				
	3	1.00 1.10, 3.00, 6.00	12A 45A						EOB3	IN FLD ADDED SHIM THICKNESS AS REQD .030 MAX. REVISED PICTURE IN SECT M-M, ADDED NOTE 14.						
	4	1.00, 1.10, 3.00, 4.00, 6.06	9C 23C					✓	EOB4	ON-1 ASSY ADDED DRILL #19 (.165-.171) 17 HOLES LH 16 HOLES RH & NAS 697-A08 (33) MS20426AD3 (66) AS SHOWN & NOTE 15						

FOR CONTINUATION OF REVISIONS SEE SHEET 1.11

GRUMMAN AIRCRAFT ENGRG CORP, BETHPAGE, L. I., NEW YORK

SIZE	CODE IDENT NO.		
B	26512	LDW280-52020	B
SCALE NONE			SHEET 1.10

ENG 77.3 5-64

01

NAS 9-1100

QTY PER ASSEMBLY -3	QTY PER ASSEMBLY -1	CODE IDENT	PART NO.	I&T	NOMENCLATURE OR DESCRIPTION	MATERIAL	GOVT SPEC	COML SPEC	STOCK SIZE	PROCESS SYM	FINISH NO.	ZONE
	1		LDW280-10367-19	E	ZEE	SEE DWG						18A
	1		-17									18A
	1		-15									18B
	1		-13									19A
	1		LDW280-10367-11		ZEE							20A
	1		LDW280-10366-25		ANGLE							18B
	1		LDW280-10366-23		ANGLE							18B
	1		LDW280-10366-21		ANGLE							18B
	1		LDW280-10366-19		ANGLE							18B
	1		LDW280-10366-5		ANGLE ASSY							51A
	1		LDW280-10352-17		BRACKET							5A
	1		-15		BRACKET							5A
	1		-14		ANGLE							5A
	1		-13		ANGLE							5A
	1		-12		BRACKET							5B
	1		LDW280-10352-11		BRACKET							5B
	1		LDW280-10351-13		ANGLE							12C
	1		LDW280-10351-11		FRAME							14C
	1		LDW280-10350-15		ZEE							6B
	1		-13		CHANNEL							6C
	1		-12		ANGLE							5B
	1		LDW280-10350-11	E	ANGLE	SEE DWG						6B

SYM OR NO.	PROCESS OR FINISH	GRUMMAN SPEC OR MILITARY SPEC	SYM OR NO.	PROCESS OR FINISH	GRUMMAN SPEC OR MILITARY SPEC	SYM OR NO.	PROCESS OR FINISH	GRUMMAN SPEC OR MILITARY SPEC

I & T: IDENTIFICATION AND TRACEABILITY IN ACCORDANCE WITH : NONE

GRUMMAN AIRCRAFT ENGRG CORP, BETHPAGE, L. I., NEW YORK

SIZE	CODE IDENT NO.		
B	26512	LDW280-52020	D
SCALE NONE		SHEET 2.02	

ENG 77.2 7-65

01 NAS 9-1100

REVISIONS FOR CONTINUATION OF REVISIONS SEE SHEET 1.12

CHANGE LTR	ITEM NO.	SHEET NO.	ZONE	GRUMMAN INFO ONLY	DET SPEC	CLASS I	CLASS II	ENGRG ORDER	DESCRIPTION	EFFECTIVITY	DISPOSITION OF EXISTING PARTS		CHANGED BY AND DATE	ENGRG APPD	GOVT APPD
											REWORK	SCRAP			
B	5	1.00, 1.11, 2.03, 3.00	14C 14D					EOB5	ADDED LDW280-10902-17(3) & -21(1) & BONDING NOTE 16 TO -1 INSTL. SH 1.00 OF 13 (WAS) SH 1.00 OF 12. ADDED SH 1.11. (ADDED VIEW CE-CE & CF-CF)	LEM-2	✓		M. Pachalik 9-15-66		
C	1	1.00, 1.11, 2.04 2.05, 5.00	35A 36A					EOC1	ON -1 DELETED GR10HAD5-6(3), 5-147(3), HL18-5-5(3), HL70-5(3), 658254-8(3), GW10G-2(3).						
	2	1.00, 1.11, 2.03, 3.00	10B 11B				✓	EOC2	IN FLD & B/M FOR -1 ADDED LDW280-28250-1						
	3	1.00, 1.11, 2.02, 2.04, 2.05, 4	18B					EOC3	IN FLD & B/M FOR -1 ADDED LDW280-10366-25, GR10HAD5-(3), 5-147(3).						
	4	1.00, 1.11, 3.00	9B					EOC4	ADDED (16) E19 (.165-.171) HOLES TO LDW280-52020-1 SUBASSY LH SIDE ONLY. ADDED KEY LEGEND.						
	5	1.00, 1.11, 3.00	9B					EOC5	ADDED (8) E19 (.165-.171) HOLES & (16) RCS-19 (.165-.171) HOLES TO -1 ASSY						
D	1	1.00, 1.11, 4.00	23C					EOD1	ADDED (16) RCS19 (.165-.171) HOLES TO LDW280-52020-1 ASSY.						
	2	1.10						EOD2	CANCELLED BY EOD7	NOT REQD	NOT	REQD			
	3	1.10						EOD3	SUPERSEDED BY EOD6						
	4	1.00, 1.11, 4.00, 5.00	24A 36A					EOD4	ADDED GB11D-7-76(1), MS20470AD4(2), ECW19 HOLE (3). REMOVED RIVET. ADDED NAS1097AD5(1). REMOVED RIVET & OPENED ECW19 HOLE (1) TO LDW280-52020-1.	LEM-2	✓				
	5	1.00, 1.11, 4.00, 6.00	19A 51A 52A					EOD5	ON LDW280-10131-17 ADDED NAS697A08(18) MS20426AD3(36), LDW280-10366-5 & MS20470AD4(2)						
	6	1.00, 1.11, 3.00	9A 10A 14A					EOD6	SUPERSEDES EOD3. ADDED GB11D-1-76(3), MS20470AD4(6), PROP 19 (.165-.171) HOLE (1). REMOVED GB11D-1-76(1) & PLUG EXISTING HOLES ON LDW280-52020-1.						
	7	1.10						EOD7	CANCELLED EOD2	LEM-2	NOT	REQD			
E	1	1.00, 1.11, 3.00, 4.00	9B 10B 22B 24B				✓	EOE1	ADDED E19 (.165-.171)(4) HOLES TO LDW280-10134-13 & -14 ON LDW280-52020-1 ASSY.	LEM-2	✓	RL			

CHG APPROVED

LTR	GROUP LDR	VEH DES INT	STRUCTURES	STRUCTURES	WEIGHTS						
B											
C											
D											
E											

GRUMMAN AIRCRAFT ENGRG CORP., BETHPAGE, L. I., NEW YORK

SIZE	CODE IDENT NO.		
B	26512	LDW280-52020	E
SCALE	NONE		SHEET 1.11

ENG 77.16 3-66

01 NAS 9-1100

REVISIONS FOR CONTINUATION OF REVISIONS SEE SHEET 1.13

CHANGE LTR	ITEM NO.	SHEET NO.	ZONE	GRUMMAN INFO ONLY	DET SPEC	CLASS I	CLASS II	ENGRG ORDER	DESCRIPTION	EFFECTIVITY	DISPOSITION OF EXISTING PARTS		CHANGED BY AND DATE	ENGRG APPD	GOVT APPD
											REWORK	SCRAP			
E	2	1.00, 1.10						EOE2	SUPERSEDED BY EOE3 SH 1.00 OF 14 (WAS) SH 1.00 OF 13 (ADDED SH 1.12)	NOT REQD	NOT	REQD	M. Pacholik 9-15-66		
	3	1.00, 1.12, 4.00	24B					EOE3	SUPERSEDES EOE2. ADDED E19 (.165-.171) HOLES (12) TO LDW280-52020-1 INSTL	LEM-2	✓				
	4	1.00 1.12, 3.00 4.00, 6.00	4D 21D 42A 43B					EOE4	ADDED TO -1 LH & RH SIDE GB11D-5-76(4), MS20470AD4(8) (ADDED SECTION CG-CG, CH-CH & CJ-CJ)						
	5	1.00, 1.12, 2.03 3.00, 4.00	6A 6C 7A 7C				✓	EOE5	IN FIELD & B/M FOR -1 ADDED LDW280-51297-1.						
	6	1.00, 1.12 4.00	22B 24B					EOE6	ON -1 ASSY ADDED .165-.171 HOLE.						
F	1	1.00, 1.12, 2.04, 4.00	21A 23A					EOF1	ADDED TO -1 ASSY GB11D-1-76(5), MS20470AD4 (10) .165-.171 HOLES (9)						
	2	1.00, 1.12 2.04, 5.00	31A					EOF2	ON -5 ADDED GB11D-5-76(1), GR10HAD4-6(2), 5-146(2) RH SIDE ONLY.						
	3								REF EO-F3 NOT APPLICABLE. "ON-3" SHOULD BE ON-1. PREVIOUSLY INCORPORATED ON EOE5.	NOT REQD	NOT	REQD			
G	1	1.00, 1.12, 2.03 3.00, 4.00	16A					EOG1	ADDED (1) REQD OF LDW280-28293-1 & -2 TO LDW280-52020-1	LEM-2	✓				
	2	1.00, 1.12 3.00, 4.00	11D 22D					EOG2	ADDED E19 (.165-.171) HOLE (1) TO LDW280-10128-11 & -12 ON LDW280-52020-1 ASSY.						
	3	1.00, 1.12, 3.00, 4.00	23D 51D					EOG3	ON -1 ADDED #19 HOLE.						
H	1	1.00, 1.12, 3.00, 4.00, 5.00, 6.00					✓	EOH1	IN FIELD: ADDED "SEE NOTE 17" TO 75LP-E-5 & HL18-5 CALLOUTS AT +227. ADDED NOTE 17 TO -1.						
	2	1.00, 1.12 2.04, 4.00	24A					EOH2	ON -1 REMOVED GB11D-7-76, MS20470AD4(2) & ADDED GB11D-5-76(1) & MS20470AD4(2)						
	3	1.00, 1.12, 3.00	14D					LEO249	ON DWG NO. LDW280-52020 ADDED GENERAL NOTE NO. 18.			RL			

CHG APPROVED

LTR	GROUP LDR	VEH DES INT	STRUCTURES	STRUCTURES	WEIGHTS						
E											
F											
G											
H	—	10/24/66 EV	10-24								

GRUMMAN AIRCRAFT ENGRG CORP., BETHPAGE, L. I., NEW YORK

SIZE	CODE IDENT NO.		
B	26512	LDW280-52020	H
SCALE NONE			SHEET 1.12

ENG 77.16 3-66

01 NAS 9-1100

QTY PER ASSEMBLY		CODE IDENT	PART NO.	I&T	NOMENCLATURE OR DESCRIPTION	MATERIAL	GOVT SPEC	COML SPEC	STOCK SIZE	PROCESS SYM	FINISH NO.	ZONE
-3	-1											
	6		GB11D-5-76	E	BRACKET	GRUMMAN STD						
	7		GB11D-1-76	↑	BRACKET	GRUMMAN STD						
	1		NAS1097AD5		RIVET	STD PART						
	16		NAS1080D6		COLLAR	↑						
263	54		NAS1080D5		COLLAR							
	16		NAS 1526-3		BOLT							
	2		NAS 1525-3		BOLT							
	20		NAS 1525-2		BOLT							
	51		NAS 697-A08		PLATENUT							
	102		MS20426AD3		RIVET							
			MS20470DD6		RIVET							
			MS20470AD5		RIVET	↓						
			MS20470AD4		RIVET	STD PART						
42	241		GW10G-2		WASHER	GRUMMAN STD						
	1		GR501A-5B		RIVET	↑						
	2		GR500-5D		RIVET-BLIND							
8	31		GR10HAD5-8		RIVET							
172	200		↑ -7		↑							
364	742		↓ -6		↓							
	646		GR10HAD5-5		RIVET							
	2		GN512G-3		NUT							
	2		GB511F-3		BOLT							
	23		G120-110-5-10		SHIM							
	3		G120-070-6-6		↑							
	3		G120-070-6-5	↓	↓	↓						
	34		G120-030-6-6	E	SHIM	GRUMMAN STD						

SYM OR NO.	PROCESS OR FINISH	GRUMMAN SPEC OR MILITARY SPEC	SYM OR NO.	PROCESS OR FINISH	GRUMMAN SPEC OR MILITARY SPEC	SYM OR NO.	PROCESS OR FINISH	GRUMMAN SPEC OR MILITARY SPEC

I & T: IDENTIFICATION AND TRACEABILITY IN ACCORDANCE WITH :
NONE

GRUMMAN AIRCRAFT ENGRG CORP, BETHPAGE, L. I., NEW YORK

SIZE	CODE IDENT NO.		
B	26512	LDW280-52020	H
SCALE NONE		SHEET 2.04	

ENG 77.2 7-65

01

NAS 9-1100

MODEL OR END ITEM	NEXT ASSY	MODULE OR SER NO.	REQD PER MODULE OR END ITEM
LEM	LDW280-52012	LEM-2 (32)	1

PART NO. LDW 280-52020-1

GAEC SCH NO. 32-4

SH REV STATUS: FOR DESCRIPTION OF REV SEE SUBQ SH

SHEET	1.00	1.10	1.11	1.12	1.13	2.00	2.01	2.02	2.03
REV	J	B	E	H	J	A	A	D	J
SHEET	2.04	2.05			1.14				
REV	H	J			J				
SHEET	3.00	4.00	5.00	6.00					
REV	J	J	J	J					

LAST SECT LTR USED CT

LAST DASH NO. USED -3

GRUMMAN REL INFO J

PRIM NO.	JK(001)		
215	MP-16	J-8/5/8	

UNLESS OTHERWISE SPECIFIED DIMENSIONS ARE IN INCHES.

TOLERANCE UNLESS SPECIFIED FRACTIONS - DECIMALS – ANGLES ±1/32 ±.020 ±1/2°

ORIG DWG AUTH

DETAIL SPEC REQUIREMENT

CLASS II ENGRG CHANGE

CLASS I ENGRG CHANGE

CONTRACT NO. NAS 9-1100

LINE ITEM #1

DOCUMENTATION TYPE II

DRAWN BY J. BIANCHINO 1/18/66

RELIABILITY

LAYOUT BY G. WHISTON

CHECKED BY 3-2-66

GP LEADER 3/16/66

VEH DES INT 3/19

STRUCTURES 3/21

STRUCTURES 3/21

WEIGHTS 3/22

PROJ ENGR 3-22-66

REL GROUP 3-23-66

GRUMMAN AIRCRAFT ENGRG CORP
BETHPAGE, L. I., NEW YORK

MID SECTION SUB ASSEMBLY
ASCENT STAGE

SIZE B

CODE IDENT NO. 26512

LDW280-52020 J

SCALE NONE

SHEET 1.00 OF 16

ENG 77.1 9-64

01

NAS 9-1100

REVISIONS FOR CONTINUATION OF REVISIONS SEE SHEET 1.14

CHANGE LTR	ITEM NO.	SHEET NO.	ZONE	GRUMMAN INFO ONLY	DET SPEC	CLASS I	CLASS II	ENGRG ORDER	DESCRIPTION	EFFECTIVITY	DISPOSITION OF EXISTING PARTS REWORK	DISPOSITION OF EXISTING PARTS SCRAP	CHANGED BY AND DATE	ENGRG APPD	GOVT APPD
H	4								REF EOB2- SHOULD BE: REMOVED 75LP-E-5-3(2) & NAS1080D5(2) ON-1, 75LP-E-5-2(22) & NAS1080D5 (22) ON-3. ADDED HL10V-5-5(2), 659013-8(2), GW10G-2 (2) HL70-5(2) ON-1. HL10V-5-4(22), 659013-8(22), GW10G-2(22), HL70-5(22) ON-3. SH 1.00 OF 15 (WAS) SH 1.00 OF 14. ADDED SH 1.13.	LEM-2	✓		M. PACHOLIK 9-16-66	RM. Cerbec 10-26-66	10-28-66
	5								REF EOB3 REVISED PICTURE IN SECT M-M SHOULD BE SECT M-M & SECT J-J.						
	6								REF EOC3 GR10HAD5(3) SHOULD BE GR10HAD5-7(3)						
	7								REF EOD4 REMOVED RIVET SHOULD BE..REMOVED MS20470AD5(1) & ADDED NAS1097AD5(1) ON LDW280-10334-12. REMOVED RIVET..SHOULD BE REMOVED MS20470AD5 & OPENED TO ECW19 HOLE(1) ON LDW280-10334-12 ONLY.						
	8								REF EOD5 DRILL #19(.165-.171) 2 HOLES SHOULD BE 3 HOLES. ADDED NAS697A08(18), MS20426AD3(36) SHOULD BE NAS697A08(19) & MS20426AD3(37)						
	9								REF EOD6 IN DESCRIPTION OF EO PROP 19 SHOULD BE P19						
	10								REF EOF2 ON-5 SHOULD BE ON-1.						
	11								REF EOH1 SHOULD BE "COAT GL500C-5 & GB511D-08 (INSIDE OF VEHICLE) WITH RTV-731 PER LSP14-22601 TO ELIMINATE SHARP CORNERS."						
	12								CHANGED COMMERCIAL CALLOUTS TO G.A.E.C. VENDOR APPROVED EQUIV, ADDED NOTE 19. REMOVED NOTES 4, 11 & 13.			RL			
	13	2.05 & 3.00	31B					B,C,D,E,F,G&H	ADDED LDW280-51349-1 TO F/D & B/M ADDED LDW280-10227 -21 THRU -28 TO B/M ONLY	LEM-2	✓	D.J.	MELMED 10-5-66 EG		
J	1	3.00, 6.00 1.00, 1.13, 2.04	6A 42C					EOJ1	ADDED SECT CL-CL (VIEW LKG UP LH SIDE) ADDED GB11D-7-76 & MS20470AD4(2). ADDED SECT. CM-CM ON -3 ASSEMBLY.	LM-2 (32)	✓		E. DUCI 7-31-68	☒	☒

CHG APPROVED

LTR	GROUP LDR	VEH DES INT	STRUCTURES	STRUCTURES	WEIGHTS
H					
J					

GRUMMAN AIRCRAFT ENGRG CORP., BETHPAGE, L. I., NEW YORK

SIZE	CODE IDENT NO.		
B	26512	LDW280-52020	J
SCALE NONE		SHEET 1.13	

ENG 77.16 3-66

01

NAS 9-1100

REVISIONS FOR CONTINUATION OF REVISIONS SEE SHEET ______

CHANGE LTR	ITEM NO.	SHEET NO.	ZONE	GRUMMAN INFO ONLY	DET SPEC	CLASS I	CLASS II	ENGRG ORDER	DESCRIPTION	EFFECTIVITY	DISPOSITION OF EXISTING PARTS		CHANGED BY AND DATE	ENGRG APPD	GOVT APPD
											REWORK	SCRAP			
J	2	4.00, 1.00 1.14, 2.03 3.00, 5.00	19A 29A 29B					EOJ 2	ON-1 SHT 4 ZONE 20A IN VIEW H-H ADDED SECT CN-CN & SECT CP-CP ADDING PART LDW 280M11246-11. ADDED NOTE 20 WHICH READS: BOND LDW280M11246-11 TO LDW280M10003-3 WITH EPON 934 MIL-A-5090D AS PER LSP-14-22500, CURE RANGE # 1. CURE AT ROOM TEMP. ADDED SH 1.14.	LM-2	✓		F. DUCI 7-31-68		
	3	4.00, 3.00	9A 10A 16A 15A				✓	EOJ3 LCD1244	FOR -1 ADDED LDW280M11292-11 & 12, GB511K-08 (8) GN512H-08-(8), GS570P-08 (2), GW10G-2 (2), ADDED NOTE 21. REMOVED LDW280-10273-15 & -16, MS20470DD5 (4), GB511D-08 (2), GN512H-08 (2). ADDED .375 D C'BORE.						
	4	4.00	16A				✓	EOJ4 LCD-1244	REF EOJ3: ON-1, GB511K-08-5 (2) WAS MFG. HD. (NS), GB511K-08-3 (2) WAS MFG. HD. (NS), GN512H-08 (4) WAS (FS), GS570P-08 (4) (FS) WAS (NS) & GW10G-2 (4) (FS) WAS (NS).						
	5	3.00	18CD 4A 6A				✓	EOJ5 LCD-1552	ON-1, ADD LDW 280-51297-3, REMOVE LDW 280-51297-1						
	6	3.00	11B				✓	EOJ6 LCD-1552	REMOVED LDW280M10001-1 FROM -3 & REPLACED IT WITH LDW280M10001-3						
	7	6.00	48A				✓	EOJ7 LCD 1516	ON-1, ADDED LDW280-52920-1						
	8	3.00, 4.00, 5.00, 6.00	22A, B,C, 7A,B			✓		EOJ8, CCA 578, LCD1436	REMOVED NOTE 17	LM-2	NOT	REQD			
	9	6.00	48A	R		✓		EOJ9, CCA 745, LCD 2223	ON-1, LDW280-52920-3 WAS LDW280-52920-1	LM-2	✓				
	10	4.00	16A				✓	LCD 1244	REF EOJ3: ADDED DETAIL CR, CS & SECT CT-CT	LM-2	✓		ES	F. Zukow	

CHG APPROVED	LTR	GROUP LDR	VEH DES INT	STRUCTURES	STRUCTURES	WEIGHTS	RELIABILITY					
	J											

GRUMMAN AIRCRAFT ENGRG CORP., BETHPAGE, L. I., NEW YORK

SIZE	CODE IDENT NO.		
B	26512	LDW280-52020	J
SCALE NONE		SHEET 1.14	

ENG 77.16 3-66

01

NAS 9-1100

QTY PER ASSEMBLY -3	QTY PER ASSEMBLY -1	CODE IDENT	PART NO.	I&T	NOMENCLATURE OR DESCRIPTION	MATERIAL	GOVT SPEC	COML SPEC	STOCK SIZE	PROCESS SYM	FINISH NO.	ZONE
	1		LDW280M11292-12	E	FITTING	SEE DWG						16B
	1		LDW280M11292-11	E	FITTING	SEE DWG						16B
	1		LDW280-51297-3	E	SUPPORT INSTL	SEE DWG						6D
	1		LDW280-28293-2		SUPPORT INSTL							16A
	1		LDW280-28293-1		SUPPORT INSTL							16A
	1		LDW280-28250-1		BRACKET INSTL							10B
	1		LDW280M11246-11		PLATE							29A
	1		LDW280M10558-2		FITTING							12B
	1		LDW280M10558-1		FITTING							45B
	2		LDW280M10357-2		FITTING							6C
	2		LDW280M10357-1		FITTING							6C
	8		LDW280M10249-1		STRAP							8B
	12		LDW280M10218-1		STRAP							10B
	3		LDW280M10120-2		FITTING							44D
	3		LDW280M10120-1		FITTING							48D
1			LDW280M10001-3		BULKHEAD							8B
1			LDW280M10232-1		BULKHEAD							11B
	1		LDW280-23105-3		FITTING INSTL							10C
1			LDW280-52041-3		SKIN DECK ASSY							9A
1			LDW280-52041-1		SKIN DECK ASSY							9D
	1		LDW280-10902-21		DOUBLER							14D
	3		LDW280-10902-17	E	DOUBLER	SEE DWG						14C

SYM OR NO.	PROCESS OR FINISH	GRUMMAN SPEC OR MILITARY SPEC	SYM OR NO.	PROCESS OR FINISH	GRUMMAN SPEC OR MILITARY SPEC	SYM OR NO.	PROCESS OR FINISH	GRUMMAN SPEC OR MILITARY SPEC

I & T: IDENTIFICATION AND TRACEABILITY IN ACCORDANCE WITH : NONE

GRUMMAN AIRCRAFT ENGRG CORP, BETHPAGE, L. I., NEW YORK

SIZE	CODE IDENT NO.		
B	26512	LDW280-52020	J

SCALE NONE

SHEET 2.03

ENG 77.2 7-65

01

NAS 9-1100

QTY PER ASSEMBLY							CODE IDENT	PART NO.	I&T	NOMENCLATURE OR DESCRIPTION	MATERIAL	GOVT SPEC	COML SPEC	STOCK SIZE	PROCESS SYM	FINISH NO.	ZONE
						1		LDW280-10227-28	E	ANGLE	SEE DWG						32B
						1		-27									32B
						1		-26									32C
						1		-25									32C
						1		-24									31B
						1		-23									31B
						1		-22									31B
						1		LDW280-10227-21		ANGLE	SEE DWG						31B
					66	241		GS570P-08		SEAL	GRUMMAN STD						
					902	1542		GS570J-3D		SEAL							
						2		GS570J-1D		SEAL							
					206	19		GL500C-5-3		BOLT							
					147	13		GL500C-5-2		BOLT							
					42	323		GN512H-08		COLLAR							
					2			GB511K-08-5		BOLT							
					22			GB511K-08-4		BOLT							
						4		GB511D-08-7		BOLT							
					24	26		GB511D-08-6									
					6	114		GB511D-08-5									
						100		GB511D-08-4									
						22		GB511D-08-3									
						57		GB511D-08-2	E	BOLT	GRUMMAN STD						
						1		LDW280-52920-3	E	FITTING INSTL	SEE DWG						48A
						1		LDW280-51349-1	E	SUPPORT INSTL	SEE DWG						4D
					-3	-1											

SYM OR NO.	PROCESS OR FINISH	GRUMMAN SPEC OR MILITARY SPEC	SYM OR NO.	PROCESS OR FINISH	GRUMMAN SPEC OR MILITARY SPEC	SYM OR NO.	PROCESS OR FINISH	GRUMMAN SPEC OR MILITARY SPEC

I & T: IDENTIFICATION AND TRACEABILITY IN ACCORDANCE WITH : NONE

GRUMMAN AIRCRAFT ENGRG CORP, BETHPAGE, L. I., NEW YORK

SIZE	CODE IDENT NO.		
B	26512	LDW280-52020	J
SCALE NONE			SHEET 2.05

ENG 77.2 7-65

01

NAS 9-1100

5/5

01/05

NAS 9-1100

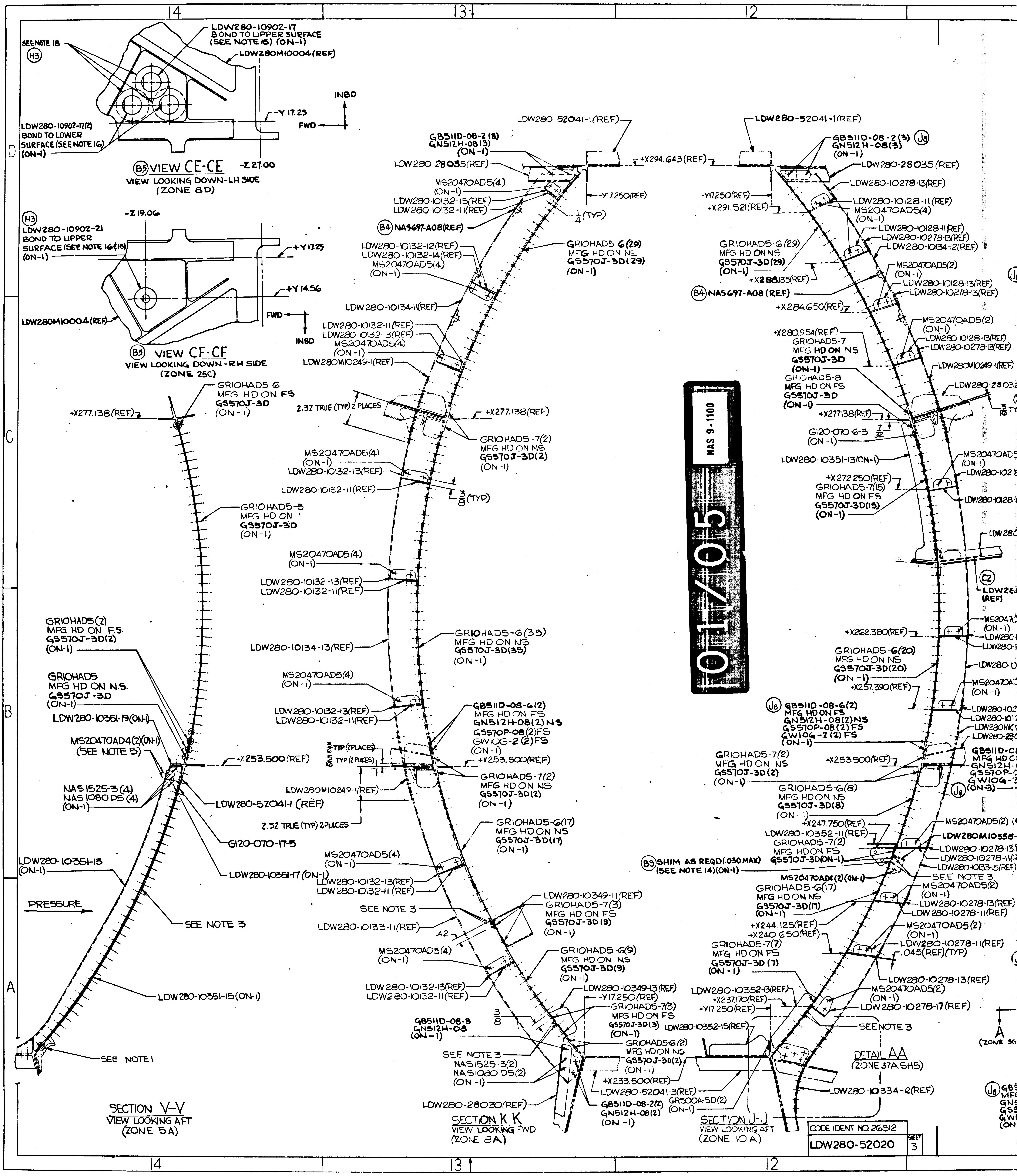
14
13
12
D
C
B
A
SEE NOTE 18
H3
LDW280-10902-17
BOND TO UPPER SURFACE
(SEE NOTE 16) (ON-1)
LDW280M10004(REF)
LDW280-10902-17(2)
BOND TO LOWER
SURFACE (SEE NOTE 16)
(ON-1)
-Y 17.25
FWD
INBD
-Z 27.00
B5 VIEW CE-CE
VIEW LOOKING DOWN-LH SIDE
(ZONE 8D)
H3
LDW280-10902-21
BOND TO UPPER
SURFACE (SEE NOTE 16&18)
(ON-1)
-Z 19.06
+Y 17.25
+Y 14.56
LDW280M10004(REF)
FWD
INBD
B5 VIEW CF-CF
VIEW LOOKING DOWN-RH SIDE
(ZONE 25C)
+X277.138(REF)
GRIOHAD5-6
MFG HD ON FS
GS570J-3D
(ON-1)
GRIOHAD5-5
MFG HD ON
GS570J-3D
(ON-1)
GRIOHAD5(2)
MFG HD ON F.S.
GS570J-3D(2)
(ON-1)
GRIOHAD5
MFG HD ON N.S.
GS570J-3D
(ON-1)
LDW280-10351-19(ON-1)
MS20470AD4(2)(ON-1)
(SEE NOTE 5)
+X253.500(REF)
NAS1525-3(4)
NAS1080 D5(4)
(ON-1)
LDW280-52041-1 (REF)
G120-070-17-5
LDW280-10351-13
(ON-1)
LDW280-10351-17(ON-1)
PRESSURE
SEE NOTE 3
LDW280-10351-15(ON-1)
SEE NOTE 1
SECTION V-V
VIEW LOOKING AFT
(ZONE 5A)
LDW280 52041-1(REF)
GB511D-08-2(3)
GN512H-08(3)
(ON-1)
LDW280-28035(REF)
+X294.643(REF)
MS20470AD5(4)
(ON-1)
-Y17.250(REF)
LDW280-10132-15(REF)
LDW280-10132-11(REF)
1/4(TYP)
B4 NAS697-A08(REF)
LDW280-10132-12(REF)
LDW280-10132-14(REF)
MS20470AD5(4)
(ON-1)
GRIOHAD5-6(29)
MFG HD ON NS
GS570J-3D(29)
(ON-1)
LDW280-10134-11(REF)
LDW280-10132-11(REF)
LDW280-10132-13(REF)
MS20470AD5(4)
(ON-1)
LDW280M10249-1(REF)
2.32 TRUE (TYP) 2 PLACES
+X277.138(REF)
GRIOHAD5-7(2)
MFG HD ON NS
GS570J-3D(2)
(ON-1)
MS20470AD5(4)
(ON-1)
LDW280-10132-13(REF)
LDW280-10132-11(REF)
3/8(TYP)
MS20470AD5(4)
(ON-1)
LDW280-10132-13(REF)
LDW280-10132-11(REF)
LDW280-10134-13(REF)
GRIOHAD5-6(35)
MFG HD ON NS
GS570J-3D(35)
(ON-1)
MS20470AD5(4)
(ON-1)
LDW280-10132-13(REF)
LDW280-10132-11(REF)
GB511D-08-6(2)
MFG HD ON FS
GN512H-08(2)NS
GS570P-08(2)FS
GW10G-2(2)FS
(ON-1)
TYP (2 PLACES)
TYP (2 PLACES)
+X253.500(REF)
LDW280M10249-1(REF)
GRIOHAD5-7(2)
MFG HD ON NS
GS570J-3D(2)
(ON-1)
2.32 TRUE (TYP) 2 PLACES
GRIOHAD5-6(17)
MFG HD ON NS
GS570J-3D(17)
(ON-1)
MS20470AD5(4)
(ON-1)
LDW280-10132-13(REF)
LDW280-10132-11(REF)
SEE NOTE 3
LDW280-10133-11(REF)
.42
LDW280-10349-11(REF)
GRIOHAD5-7(3)
MFG HD ON FS
GS570J-3D(3)
(ON-1)
MS20470AD5(4)
(ON-1)
GRIOHAD5-6(9)
MFG HD ON NS
GS570J-3D(9)
(ON-1)
LDW280-10132-13(REF)
LDW280-10132-11(REF)
LDW280-10349-13(REF)
-Y17.250(REF)
GRIOHAD5-7(3)
MFG HD ON FS
GS570J-3D(3)
(ON-1)
3/8
GB511D-08-3
GN512H-08
(ON-1)
GRIOHAD5-6(2)
MFG HD ON NS
GS570J-3D(2)
(ON-1)
SEE NOTE 3
NAS1525-3(2)
NAS1080 D5(2)
(ON-1)
+X233.500(REF)
LDW280-28030(REF)
LDW280 52041-3(REF)
GB511D-08-2(2)
GN512H-08(2)
(ON-1)
GR500A-5D(2)
(ON-1)
SECTION K-K
VIEW LOOKING FWD
(ZONE 8A)
LDW280-52041-1(REF)
GB511D-08-2(3) J8
GN512H-08(3)
(ON-1)
LDW280-28035(REF)
LDW280-10278-13(REF)
-Y17.250(REF)
+X291.521(REF)
LDW280-10128-11(REF)
MS20470AD5(4)
(ON-1)
LDW280-10128-11(REF)
LDW280-10278-13(REF)
LDW280-10134-12(REF)
GRIOHAD5-6(29)
MFG HD ON NS
GS570J-3D(29)
(ON-1)
+X288.135(REF)
MS20470AD5(2)
(ON-1)
LDW280-10128-13(REF)
LDW280-10278-13(REF)
B4 NAS697-A08 (REF)
+X284.650(REF)
MS20470AD5(2)
(ON-1)
LDW280-10128-13(REF)
LDW280-10278-13(REF)
+X280.954(REF)
GRIOHAD5-7
MFG HD ON NS
GS570J-3D
(ON-1)
LDW280M10249-1(REF)
GRIOHAD5-8
MFG HD ON FS
GS570J-3D
(ON-1)
LDW280-2803
+X277.138(REF)
G120-070-6-5
7/32
(ON-1)
3/16 TY
LDW280-10351-13(ON-1)
MS20470AD5
(ON-1)
LDW280-102
+X272.250(REF)
GRIOHAD5-7(15)
MFG HD ON FS
GS570J-3D(15)
(ON-1)
LDW280-10128-
LDW28
C2
LDW28
(REF)
+X262.380(REF)
MS2047
(ON-1)
LDW280-
LDW280
GRIOHAD5-6(20)
MFG HD ON NS
GS570J-3D(20)
(ON-1)
+X257.390(REF)
LDW280-1
MS20470A
(ON-1)
J8 GB511D-08-6(2)
MFG HD ON FS
GN512H-08(2)NS
GS570P-08(2)FS
GW10G-2(2)FS
(ON-1)
LDW280-10
LDW280-101
LDW280M10
LDW280-28
GRIOHAD5-7(2)
MFG HD ON NS
GS570J-3D(2)
(ON-1)
+X253.500(REF)
GB511D-C
MFG HD C
GN512H-
GS570P-
GW10G-
J8 (ON-3)
GRIOHAD5-6(8)
MFG HD ON NS
GS570J-3D(8)
(ON-1)
+X247.750(REF)
LDW280-10352-11(REF)
GRIOHAD5-7(2)
MFG HD FS
GS570J-3D(ON-1)
MS20470AD5(2)
LDW280M10558-
LDW280-10278-13
LDW280-10278-11(
LDW280-10133-15(REF)
B3 SHIM AS REQD(.030 MAX)
(SEE NOTE 14)(ON-1)
MS20470AD4(2)(ON-1)
SEE NOTE 3
GRIOHAD5-6(17)
MFG HD ON NS
GS570J-3D(17)
(ON-1)
MS20470AD5(2)
(ON-1)
LDW280-10278-13(REF)
LDW280-10278-11(REF)
+X244.125(REF)
+X240.650(REF)
MS20470AD5(2)
(ON-1)
GRIOHAD5-7(7)
MFG HD ON FS
GS570J-3D(7)
(ON-1)
LDW280-10278-11(REF)
.045(REF)(TYP)
LDW280-10278-13(REF)
LDW280-10352-13(REF)
+X237.170(REF)
-Y17.250(REF)
MS20470AD5(2)
(ON-1)
LDW280-10278-17(REF)
LDW280-10352-15(REF)
SEE NOTE 3
DETAIL AA
(ZONE 37A SH5)
LDW280-10334-12(REF)
SECTION J-J
VIEW LOOKING AFT
(ZONE 10A)
A
(ZONE 3
J8 GB5
MF
GN
GS
GW
(ON

CODE IDENT NO. 26512

LDW280-52020

SHEET 3

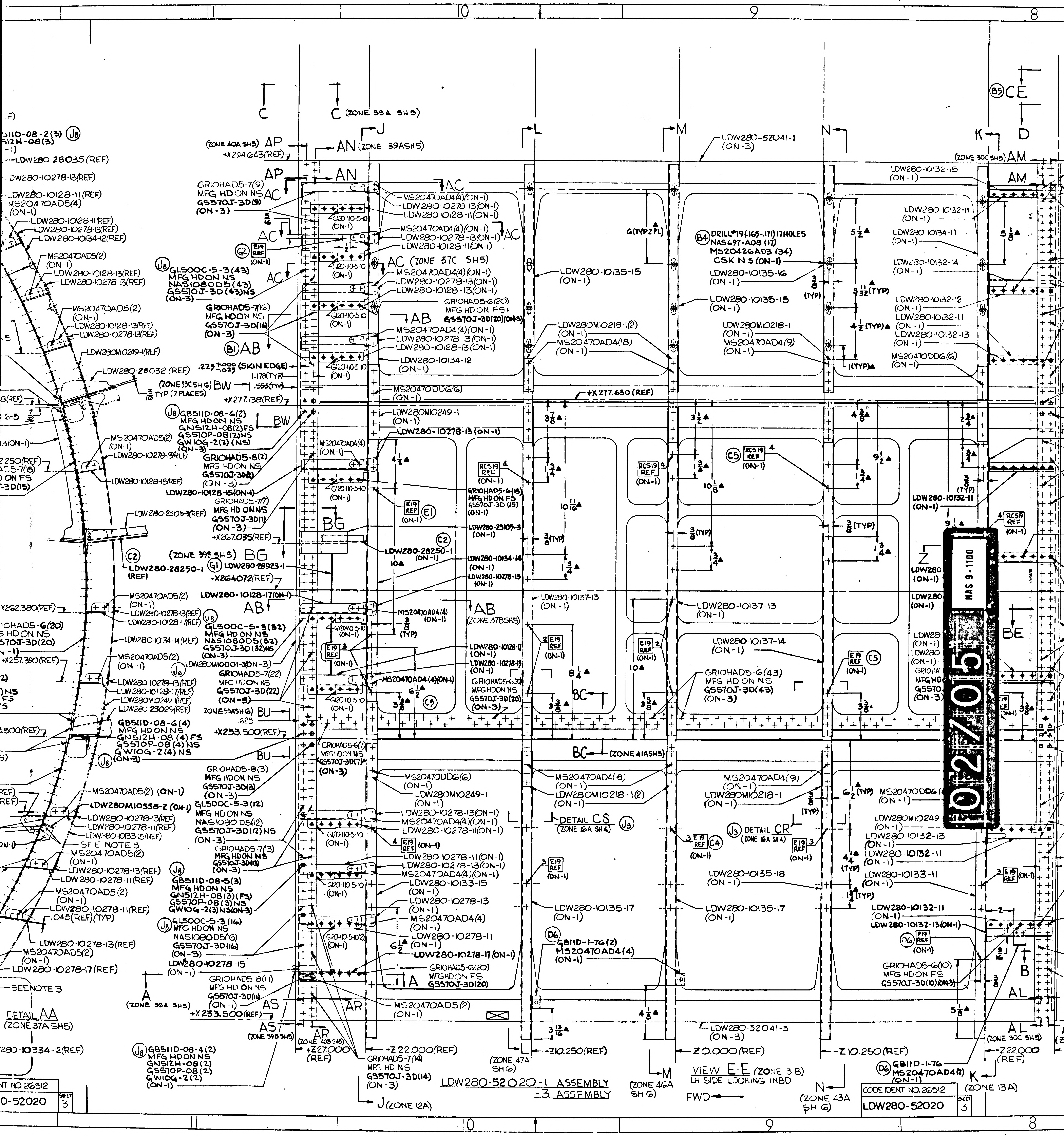
11
10
9
8
C
C (ZONE 33A SH5)
J
L
M
N
K
D
(B5) CE
(ZONE 40A SH5) AP
+X294.643(REF)
AN (ZONE 39A SH5)
AP
AN
AC
LDW280-52041-1
(ON-3)
(ZONE 30C SH5) AM
AM
GRIOHAD5-7(9)
MFG HD ON NS
GS570J-3D(9)
(ON-3)
MS20470AD4(4)(ON-1)
LDW280-10278-13(ON-1)
LDW280-10128-11(ON-1)
G120-110-5-10
(ON-1)
AC (ZONE 37C SH5)
GL500C-5-3(43)
MFG HD ON NS
NAS1080D5(43)
GS510J-3D(43)NS
(ON-3)
GRIOHAD5-7(16)
MFG HD ON NS
GS570J-3D(16)
(ON-3)
(B1) AB
GRIOHAD5-6(20)
MFG HD ON FS
GS570J-3D(20)(ON-3)
AB
MS20470AD4(4)(ON-1)
LDW280-10278-13(ON-1)
LDW280-10128-13(ON-1)
LDW280-10134-12
(ON-1)
LDW280-10135-15
(ON-1)
6(TYP 2 PL)
(B4) DRILL #19(.165-.171) 17 HOLES
NAS697-A08 (17)
MS20426AD3 (34)
CSK N S (ON-1)
LDW280-10135-16
(ON-1)
LDW280-10135-15
(ON-1)
LDW280M10218-1(2)
(ON-1)
MS20470AD4(18)
(ON-1)
LDW280M10218-1
(ON-1)
MS20470AD4(9)
(ON-1)
LDW280-10132-15
(ON-1)
LDW280-10132-11
(ON-1)
LDW280-10134-11
(ON-1)
LDW280-10132-14
(ON-1)
LDW280-10132-12
(ON-1)
LDW280-10132-11
(ON-1)
LDW280-10132-13
(ON-1)
MS20470DD6(6)
(ON-1)
LDW280-28035(REF)
LDW280-10278-13(REF)
LDW280-10128-11(REF)
MS20470AD5(4)
LDW280-10134-12(REF)
LDW280M10249-1(REF)
LDW280-28032 (REF)
.225 +.000 -.025 (SKIN EDGE)
1.178(TYP)
(ZONE 53C SH 6) BW
.553(TYP)
3/16 TYP (2 PLACES)
+X277.138(REF)
+X277.630 (REF)
MS20470DD6(6)
(ON-1)
LDW280M10249-1
(ON-1)
LDW280-10278-13 (ON-1)
GB511D-08-6(2)
MFG HD ON NS
GN512H-08(2)FS
GW10G-2(2) (NS)
BW
GRIOHAD5-8(2)
MFG HD ON NS
GS570J-3D(2)
(ON-3)
LDW280-10128-15(ON-1)
GRIOHAD5-7(7)
MFG HD ON NS
GS570J-3D(1)
(ON-3)
+X267.035(REF)
BG
LDW280-23105-3(REF)
(C2) LDW280-28250-1
(REF)
(ZONE 39B SH5) BG
(G1) LDW280-28923-1
+X264.072(REF)
LDW280-10128-17(ON-1)
AB
GRIOHAD5-6(15)
MFG HD ON FS
GS570J-3D (15)
(ON-1)
LDW280-23105-3
(ON-1)
LDW280-28250-1
(ON-1)
LDW280-10134-14
(ON-1)
LDW280-10278-15
(ON-1)
E19 REF (ON-1) (E1)
RCS19 REF (ON-1)
LDW280-10137-13
(ON-1)
LDW280-10137-14
(ON-1)
GRIOHAD5-6(43)
MFG HD ON NS
GS570J-3D(43)
(ON-3)
MS20470AD4(4)
(ON-1)
AB
(ZONE 37B SH5)
GL500C-5-3(32)
MFG HD ON NS
NAS1080D5(32)
GS510J-3D(32)NS
(ON-3)
LDW280M10001-3(ON-3)
GRIOHAD5-7(22)
MFG HD NS
GS570J-3D(22)
(ON-3)
LDW280-10128-17
(ON-1)
LDW280-10278-15
(ON-1)
MS20470AD4(4)(ON-1)
GRIOHAD5-6(20)
MFG HD ON NS
GS570J-3D(20)
(ON-3)
ZONE 55A SH 6 BU
.625
+X253.500(REF)
GB511D-08-6(4)
MFG HD ON NS
GN512H-08 (4) FS
GS510P-08 (4) NS
GW10G-2(4) NS
(ON-3)
BU
BC
(ZONE 41A SH5)
BE
Z
GRIOHAD5-6(7)
MFG HD ON NS
GS570J-3D(7)
(ON-3)
GRIOHAD5-8(3)
MFG HD ON NS
GS570J-3D(3)
(ON-3)
GL500C-5-3(12)
MFG HD ON NS
NAS1080D5(12)
GS510J-3D(12)NS
(ON-3)
GRIOHAD5-7(13)
MFG HD ON NS
GS570J-3D(13)
(ON-3)
GB511D-08-5(3)
MFG HD ON NS
GN512H-08(3)(FS)
GS570P-08(3)NS
GW10G-2(3)NS(ON-3)
GL500C-5-3(16)
MFG HD ON NS
NAS1080D5(16)
GS570J-3D(16)
(ON-3)
LDW280-10278-15
(ON-1)
GRIOHAD5-8(11)
MFG HD ON NS
GS570J-3D(11)
(ON-1)
A
(ZONE 36A SH5)
AS
+X233.500(REF)
AS
(ZONE 39B SH5)
AR
AR
(ZONE 40B SH5)
+Z27.000
(REF)
GB511D-08-4(2)
MFG HD ON NS
GN512H-08(2)
GS570P-08(2)
GW10G-2(2)
(ON-1)
MS20470AD5(2) (ON-1)
LDW280M10558-2 (ON-1)
LDW280-10278-13(REF)
LDW280-10278-11(REF)
LDW280-10133-15(REF)
SEE NOTE 3
MS20470AD5(2)
LDW280-10278-13(REF)
LDW280-10278-11(REF)
.045(REF)(TYP)
LDW280-10278-13(REF)
LDW280-10278-17(REF)
SEE NOTE 3
DETAIL AA
(ZONE 37A SH5)
LDW280-10334-12(REF)
MS20470DD6(6)
(ON-1)
LDW280M10249-1
LDW280-10278-13(ON-1)
MS20470AD4(4)(ON-1)
LDW280-10278-11(ON-1)
LDW280-10278-11(ON-1)
LDW280-10278-13(ON-1)
MS20470AD4(4)(ON-1)
LDW280-10133-15
(ON-1)
LDW280-10278-13
(ON-1)
MS20470AD4(4)
(ON-1)
LDW280-10278-11
LDW280-10278-17 (ON-1)
GRIOHAD5-6(20)
MFG HD ON FS
GS570J-3D(20)
A
MS20470AD5(2)
(ON-1)
MS20470AD4(18)
(ON-1)
LDW280M10218-1(2)
(ON-1)
DETAIL CS
(ZONE 16A SH4) (J3)
LDW280-10135-17
(ON-1)
(D6) GB11D-1-76(2)
MS20470AD4(4)
(ON-1)
MS20470AD4(9)
(ON-1)
LDW280M10218-1
(ON-1)
(J3) DETAIL CR
(ZONE 16A SH4)
LDW280-10135-18
(ON-1)
LDW280-10135-17
(ON-1)
MS20470DD6(6)
(ON-1)
LDW280M10249
(ON-1)
LDW280-10132-13
(ON-1)
LDW280-10132-11
(ON-1)
LDW280-10133-11
(ON-1)
LDW280-10132-11
LDW280-10132-13(ON-1)
P19 REF (ON-1)
GRIOHAD5-6(10)
MFG HD ON FS
GS570J-3D(10)(ON-3)
B
AL
AL
(ZONE 30C SH5)
-Z22.000
(REF)
+Z22.000(REF)
GRIOHAD5-7(14)
MFG HD NS
GS570J-3D(14)
(ON-3)
J (ZONE 12A)
LDW280-52020-1 ASSEMBLY
-3 ASSEMBLY
(ZONE 47A SH 6)
+Z10.250(REF)
L
LDW280-52041-3
(ON-3)
Z0.000(REF)
M
(ZONE 46A SH 6)
VIEW E-E (ZONE 3 B)
LH SIDE LOOKING INBD
FWD
-Z10.250(REF)
N
(ZONE 43A SH 6)
(D6) GB11D-1-76
MS20470AD4(2)
(ON-1)
K
(ZONE 13A)
CODE IDENT NO. 26512
LDW280-52020
SHEET 3
NO. 26512
0-52020
SHEET 3
02/05
NAS 9-1100

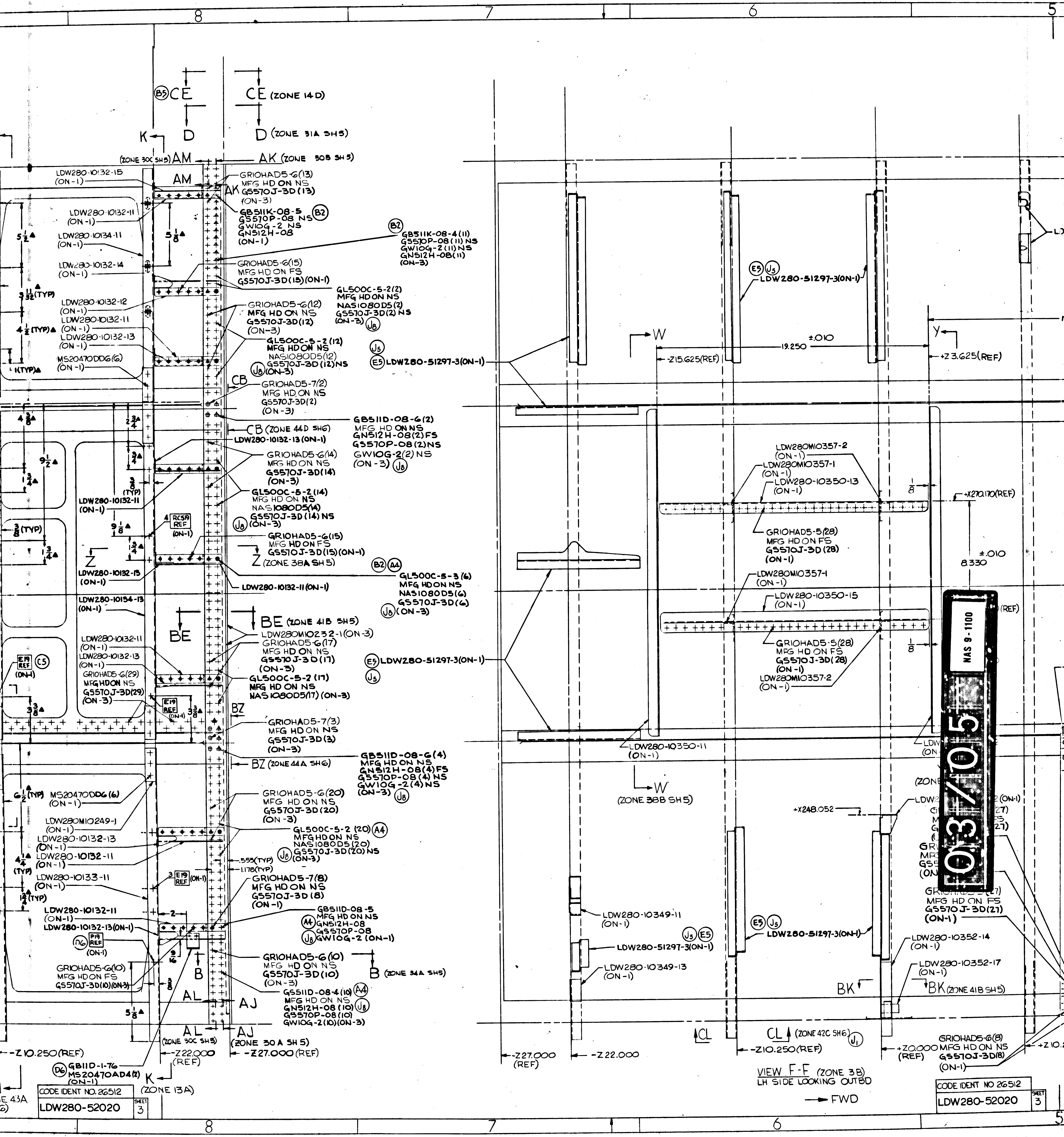
VIEW F-F (ZONE 3B)
LH SIDE LOOKING OUTBD
FWD
CE (ZONE 14D)
D (ZONE 31A SH5)
AK (ZONE 30B SH5)
(ZONE 30C SH5) AM
CB (ZONE 44D SH6)
Z (ZONE 38A SH5)
BE (ZONE 41B SH5)
BZ (ZONE 44A SH6)
B (ZONE 34A SH5)
AL (ZONE 30C SH5)
AJ (ZONE 30A SH5)
K (ZONE 13A)
W (ZONE 38B SH5)
BK (ZONE 41B SH5)
CL (ZONE 42C SH6)
LDW280-10132-15 (ON-1)
LDW280-10132-11 (ON-1)
LDW280-10134-11 (ON-1)
LDW280-10132-14 (ON-1)
LDW280-10132-12 (ON-1)
LDW280-10132-13 (ON-1)
MS20470DD6(6) (ON-1)
GRIOHAD5-6(13) MFG HD ON NS GS570J-3D(13) (ON-3)
GB511K-08-5 GS570P-08 NS GW10G-2 NS GN512H-08 (ON-1)
GB511K-08-4(11) GS570P-08(11)NS GW10G-2(11)NS GN512H-08(11) (ON-3)
GRIOHAD5-6(15) MFG HD ON FS GS570J-3D(15)(ON-1)
GL500C-5-2(2) MFG HD ON NS NAS1080D5(2) GS570J-3D(2) NS (ON-3)
GRIOHAD5-6(12) MFG HD ON NS GS570J-3D(12) (ON-3)
GL500C-5-2(12) MFG HD ON NS NAS1080D5(12) GS570J-3D(12)NS (ON-3)
GRIOHAD5-7(2) MFG HD ON NS GS570J-3D(2) (ON-3)
GB511D-08-6(2) MFG HD ON NS GN512H-08(2)FS GS570P-08(2)NS GW10G-2(2) NS (ON-3)
LDW280-10132-13(ON-1)
GRIOHAD5-6(14) MFG HD ON NS GS570J-3D(14) (ON-3)
GL500C-5-2(14) MFG HD ON NS NAS1080D5(14) GS570J-3D(14) NS (ON-3)
GRIOHAD5-6(15) MFG HD ON FS GS510J-3D(15)(ON-1)
LDW280-10132-11(ON-1)
GL500C-5-3(6) MFG HD ON NS NAS1080D5(6) GS570J-3D(6) (ON-3)
LDW280-10154-13 (ON-1)
LDW280M10232-1(ON-3)
GRIOHAD5-6(17) MFG HD ON NS GS510J-3D(17) (ON-3)
GL500C-5-2(17) MFG HD ON NS NAS1080D5(17) (ON-3)
GRIOHAD5-6(29) MFG HD ON NS GS570J-3D(29) (ON-3)
GRIOHAD5-7(3) MFG HD ON NS GS570J-3D(3) (ON-3)
GB511D-08-6(4) MFG HD ON NS GN512H-08(4)FS GS570P-08(4)NS GW10G-2(4)NS (ON-3)
MS20470DD6(6) (ON-1)
LDW280M10249-1 (ON-1)
LDW280-10133-11 (ON-1)
GRIOHAD5-6(20) MFG HD ON NS GS570J-3D(20) (ON-3)
GL500C-5-2(20) MFG HD ON NS NAS1080D5(20) GS570J-3D(20)NS (ON-3)
.555(TYP)
1.178(TYP)
GRIOHAD5-7(8) MFG HD ON NS GS570J-3D(8) (ON-1)
GB511D-08-5 MFG HD ON NS GN512H-08 GS570P-08 GW10G-2 (ON-1)
GRIOHAD5-6(10) MFG HD ON FS GS570J-3D(10)(ON-3)
GRIOHAD5-6(10) MFG HD ON NS GS570J-3D(10) (ON-3)
GS511D-08-4(10) MFG HD ON NS GN512H-08(10) GS570P-08(10) GW10G-2(10)(ON-3)
GB11D-1-76 MS20470AD4(2) (ON-1)
-Z10.250(REF)
-Z22.000 (REF)
-Z27.000(REF)
-Z27.000 (REF)
-Z22.000
-Z15.625(REF)
19.250 ±.010
+Z3.625(REF)
+X270.170(REF)
8.330 ±.010
+X248.052
+Z0.000 (REF)
LDW280-51297-3(ON-1)
LDW280M10357-2 (ON-1)
LDW280M10357-1 (ON-1)
LDW280-10350-13 (ON-1)
GRIOHAD5-5(28) MFG HD ON FS GS570J-3D(28) (ON-1)
LDW280-10350-15 (ON-1)
LDW280-10350-11 (ON-1)
LDW280-10349-11 (ON-1)
LDW280-10349-13 (ON-1)
LDW280-10352-14 (ON-1)
LDW280-10352-17 (ON-1)
GRIOHAD5-6(8) MFG HD ON NS GS570J-3D(8) (ON-1)
GS570J-3D(27) (ON-1)
E19 REF
RCS19 REF
P19 REF

CODE IDENT NO. 26512
LDW280-52020
SHEET 3

CODE IDENT NO 26512
LDW280-52020
SHEET 3

03/05

NAS 9-1100

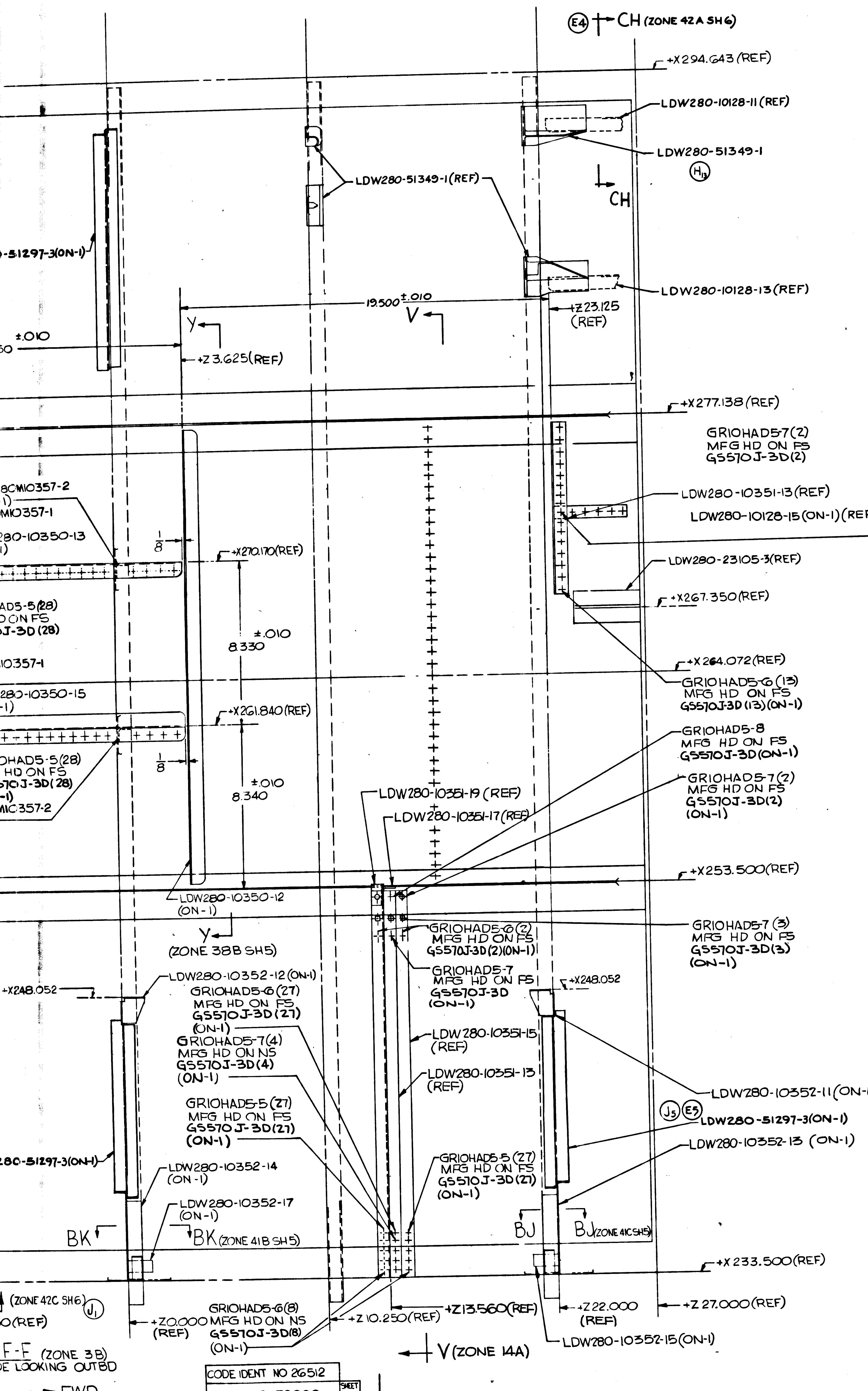

(E4) CH (ZONE 42A SH6)
+X294.643(REF)
LDW280-10128-11(REF)
LDW280-51349-1
(H3)
LDW280-51349-1(REF)
CH
-51297-3(ON-1)
19.500 ±.010
V
Y
±.010
+Z3.625(REF)
+Z23.125 (REF)
LDW280-10128-13(REF)
+X277.138(REF)
GRIOHAD5-7(2) MFG HD ON FS GS570J-3D(2)
8CM10357-2
M10357-1
280-10350-13
LDW280-10351-13(REF)
LDW280-10128-15(ON-1)(REF)
GRIOHAD5-7 MFG HD ON FS GS570J-3D(ON-1)
1/8
+X270.170(REF)
LDW280-23105-3(REF)
+X267.350(REF)
AD5-5(28) ON FS J-3D(28)
±.010 8.330
10357-1
+X264.072(REF)
280-10350-15
GRIOHAD5-6(13) MFG HD ON FS GS570J-3D(13)(ON-1)
+X261.840(REF)
GRIOHAD5-8 MFG HD ON FS GS570J-3D(ON-1)
OHAD5-5(28) HD ON FS 570J-3D(28)
MIC357-2
1/8
±.010 8.340
LDW280-10351-19 (REF)
LDW280-10351-17(REF)
GRIOHAD5-7(2) MFG HD ON FS GS570J-3D(2) (ON-1)
+X253.500(REF)
LDW280-10350-12 (ON-1)
Y
(ZONE 38B SH5)
GRIOHAD5-6(2) MFG HD ON FS GS570J-3D(2)(ON-1)
GRIOHAD5-7 MFG HD ON FS GS570J-3D (ON-1)
GRIOHAD5-7(3) MFG HD ON FS GS570J-3D(3) (ON-1)
+X248.052
+X248.052
LDW280-10352-12(ON-1)
GRIOHAD5-6(27) MFG HD ON FS GS570J-3D(27) (ON-1)
GRIOHAD5-7(4) MFG HD ON NS GS570J-3D(4) (ON-1)
LDW280-10351-15 (REF)
LDW280-10351-13 (REF)
LDW280-10352-11(ON-1)
GRIOHAD5-5(27) MFG HD ON FS GS570J-3D(27) (ON-1)
(J5)(E5) LDW280-51297-3(ON-1)
LDW280-10352-13 (ON-1)
GRIOHAD5-5(27) MFG HD ON FS GS570J-3D(27) (ON-1)
280-51297-3(ON-1)
LDW280-10352-14 (ON-1)
LDW280-10352-17 (ON-1)
BK
BK (ZONE 41B SH5)
BJ
BJ (ZONE 41C SH5)
+X233.500(REF)
(ZONE 42C SH6) (J1)
O(REF)
+Z0.000 (REF)
GRIOHAD5-6(8) MFG HD ON NS GS570J-3D(8) (ON-1)
+Z10.250(REF)
+Z13.560(REF)
+Z22.000 (REF)
+Z27.000(REF)
LDW280-10352-15(ON-1)
V (ZONE 14A)
F-F (ZONE 3B)
E LOOKING OUTBD
FWD

NOTES.
1. SEAL FASTENERS AS SHOWN PER LSP 14-14102.
2. MID SECTION ASSY FAYING SURFACES SHALL BE SEALED IN ACCORDANCE WITH SPEC LSP 14-14102, (SEE DETAIL AD).
3. ANY PART ATTACHED TO THE PRIMARY FAYING SURFACE AREA MUST BE TREATED AS A FAYING SURFACE AREA ALSO PER LSP 14-14102.
~~4. PARKER NO 5-147 IS MADE FROM COMPOUND NO 5-418-6 (SILICONE).~~
5. THESE RIVETS ARE TO BE SQUEEZED ONLY.
~~6. FINAL HOLE SIZE FOR 75LP E-5 IS TO BE (.1645-.1665).~~
~~7. FINAL HOLE SIZE FOR GR500-5 IS TO BE (.160-.164).~~
~~8. FINAL HOLE SIZE FOR HL18-5 IS TO BE (.164-.166).~~
~~9. FINAL HOLE SIZE FOR NAS1525 IS TO BE (.164-.166).~~
~~10. FINAL HOLE SIZE FOR NAS1526 IS TO BE (.188-.190).~~
~~11. FOR HL18-5-7 AN EXTRA GW10G-2 WASHER MAY BE USED TO OBTAIN PROPER GRIP LENGTH.~~
12. LDW 280-52020-1 IS SIMILAR TO LDW280-51020-1 ON INITIAL RELEASE.
~~13. INSTALL HI LOKS & HUCK BOLTS PER LSP14-15306 & LSP14-15308~~
14. SHIM THICKNESS AS REQD-MATL 2024-T3, QQ-A-250/4 FINISH: 76
15. ▲ DIMENSIONS SHOWN ARE MEASURED ON CONTOUR.
16. BOND LDW280-10902-17 & -21 TO LDW280M10004 WITH EPON 934, MIL-A-5090D, AS PER LSP14-22500, CURE RANGE #1. CURE AT ROOM TEMPERATURE.
17. ~~COAT GL500C-5 & GB511D-08 (INSIDE OF VEHICLE) WITH RTV731 PER LSP14-22601 TO ELIMINATE SHARP CORNERS.~~
18. SEAL ALL AROUND EDGE OF DOUBLER WITH EPON 919, LSM14-4103, AS PER LSP14-1402.
19. INSTALL GB511D, GB511F, GB511K, GL500C, GR500 & GR501A PER LSP14-15306, LSP14-15308, LSP14-15302 & LSP14-15303.
20. BOND LDW280M11246-11 TO LDW280M10003-3 WITH EPON 934 MIL-A-5090D AS PER LSP14-22500, CURE RANGE #1. CURE AT ROOM TEMPERATURE.
21. SHIM AS REQD USING 2024-T3 BARE QQ-A-250/4, FIN 76.

KEY TO PURPOSE HOLES ETC

E19 REF	ELECTRICAL
P19 REF	PROPULSIO
RCS19 REF	REACTION #19 (.165
ECW19 REF	ENVIRONM #19 (.165

04/05

NAS 9-1100

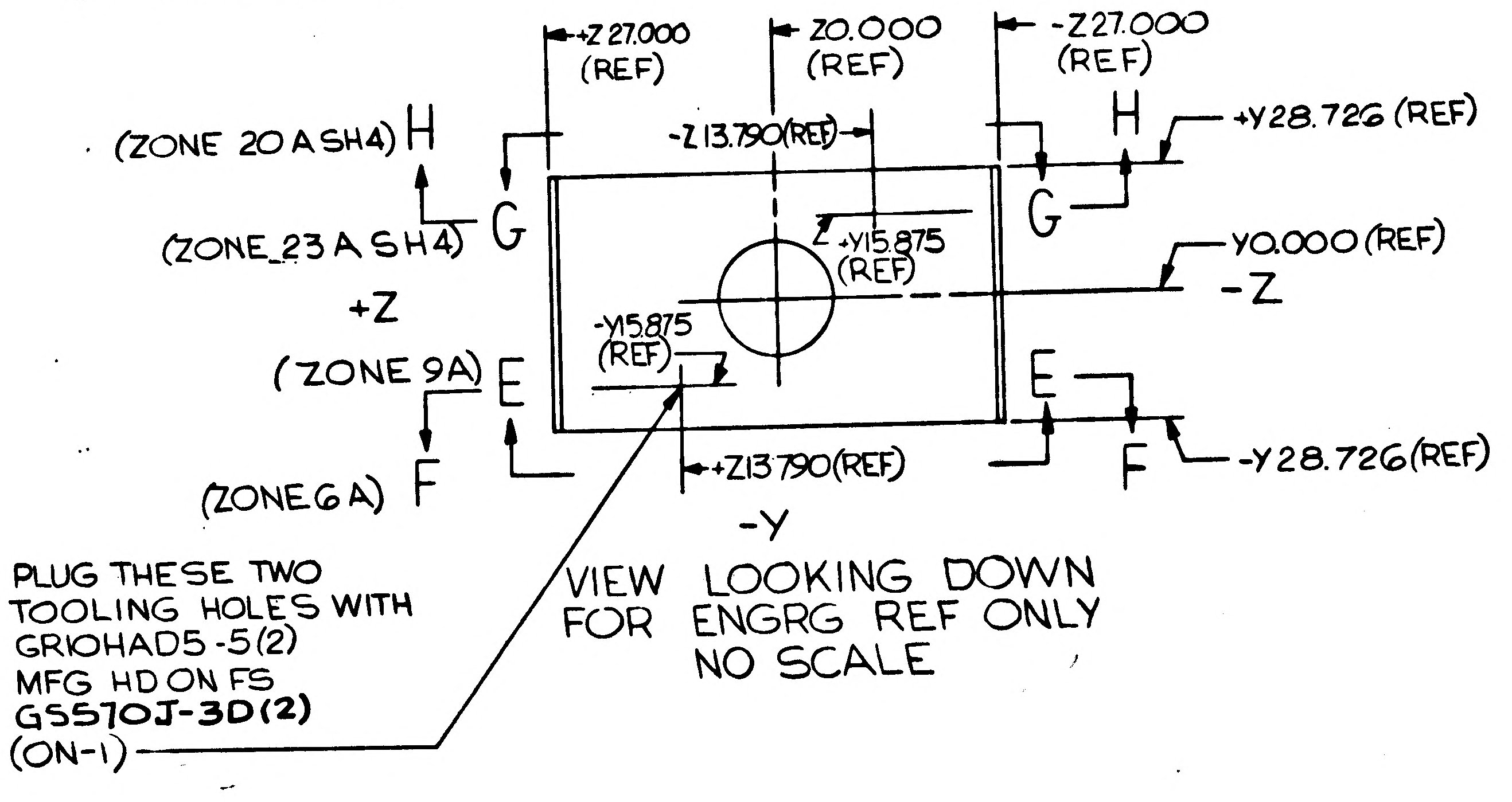

+Y
+Z27.000 (REF)
Z0.000 (REF)
-Z27.000 (REF)
(ZONE 20A SH4) H
H
+Y28.726(REF)
-Z13.790(REF)
(ZONE 23A SH4) G
G
-Y15.875 (REF)
Y0.000(REF)
+Z
-Z
(ZONE 9A) E
-Y15.875 (REF)
E
(ZONE 6A) F
+Z13.790(REF)
F
-Y28.726(REF)
-Y

VIEW LOOKING DOWN
FOR ENGRG REF ONLY
NO SCALE

PLUG THESE TWO TOOLING HOLES WITH GRIOHAD5-5(2) MFG HD ON FS GS570J-3D(2) (ON-1)

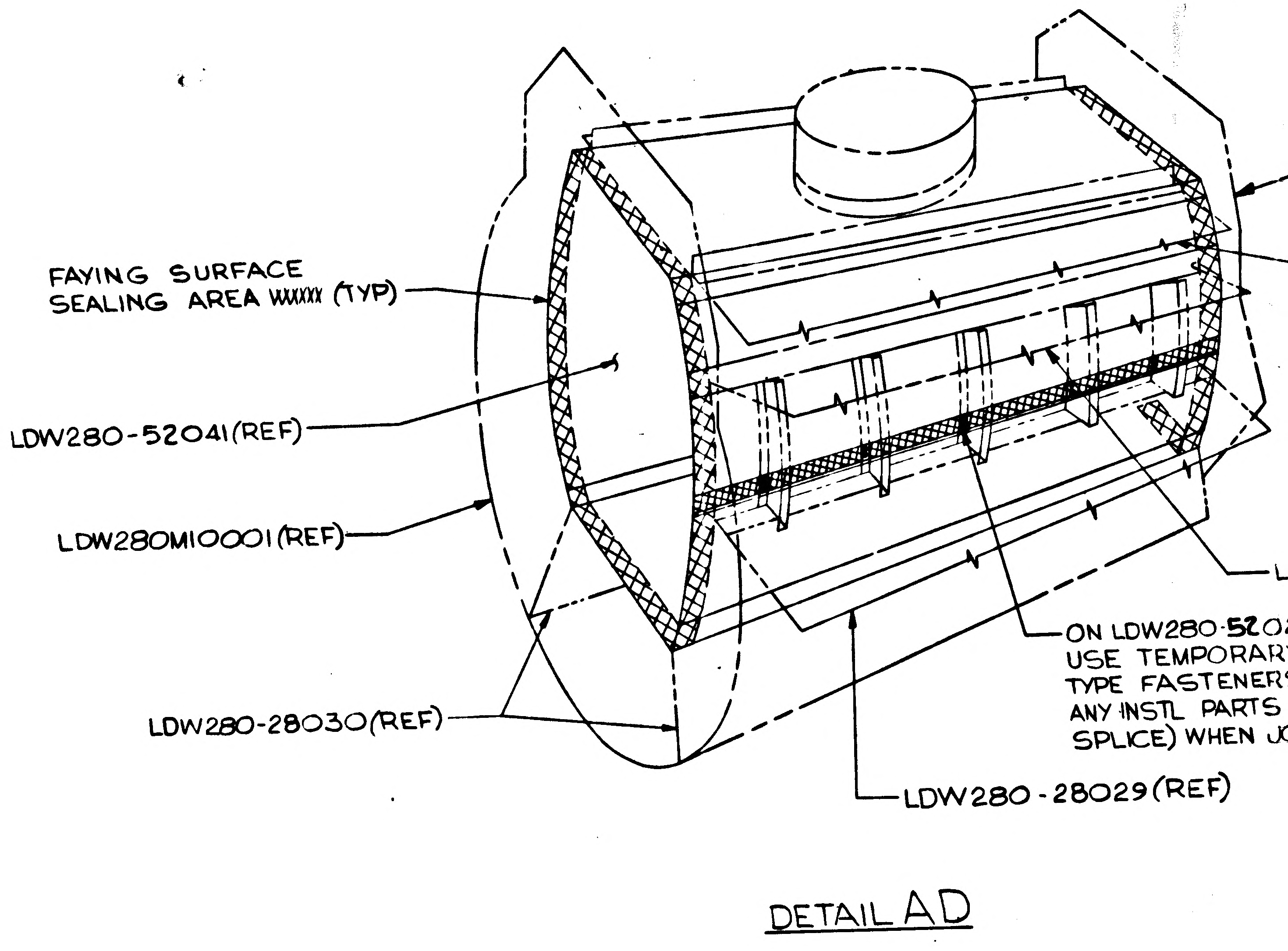

FAYING SURFACE SEALING AREA (TYP)
LDW280-52041(REF)
LDW280M10001(REF)
LDW280-28030(REF)
LDW280-28029(REF)
ON LDW280-52 USE TEMPORAR TYPE FASTENER ANY INSTL PARTS SPLICE) WHEN J

DETAIL AD

CODE IDENT NO 26512
LDW280-52020
SHEET 3

NOTES.
1. SEAL FASTENERS AS SHOWN PER LSP 14-14102.
2. MID SECTION ASSY FAYING SURFACES SHALL BE SEALED IN ACCORDANCE WITH SPEC LSP 14-14102, (SEE DETAIL AD).
3. ANY PART ATTACHED TO THE PRIMARY FAYING SURFACE AREA MUST BE TREATED AS A FAYING SURFACE AREA ALSO PER LSP 14-14102.
~~4. PARKER NO 5-147 IS MADE FROM COMPOUND NO S 418-6 (SILICONE).~~
5. THESE RIVETS ARE TO BE SQUEEZED ONLY.
~~6. FINAL HOLE SIZE FOR 75LP E-5 IS TO BE (.1645-.1665).~~
~~7. FINAL HOLE SIZE FOR GR500-5 IS TO BE (.160-.164).~~
~~8. FINAL HOLE SIZE FOR HL18-5 IS TO BE (.164-.166).~~
~~9. FINAL HOLE SIZE FOR NAS1525 IS TO BE (.164-.166).~~
~~10. FINAL HOLE SIZE FOR NAS1526 IS TO BE (.188-.196).~~
~~11. FOR HL18-5-7 AN EXTRA GW106-2 WASHER MAY BE USED TO OBTAIN PROPER GRIP LENGTH.~~
12. LDW 280-52020-1 IS SIMILAR TO LDW280-51020-1 ON INITIAL RELEASE.
~~13. INSTALL HI LOKS & HUCK BOLTS PER LSP14-15306 & LSP14-15308~~
14. SHIM THICKNESS AS REQD-MATL 2024-T3, QQ-A-250/4 FINISH: 76
15. ▲ DIMENSIONS SHOWN ARE MEASURED ON CONTOUR.
16. BOND LDW280-10902-17 & -21 TO LDW280M10004 WITH EPON 934, MIL-A-5090D, AS PER LSP14-22500, CURE RANGE #1. CURE AT ROOM TEMPERATURE.
17. ~~COAT GL500C-5 & GB511D-08 (INSIDE OF VEHICLE) WITH RTV731 PER LSP14-22601 TO ELIMINATE SHARP CORNERS.~~
18. SEAL ALL AROUND EDGE OF DOUBLER WITH EPON 919, LSM14-4103, AS PER LSP14-1402.
19. INSTALL GB511D, GB511F, GB511K, GL500C, GR500 & GR501A PER LSP14-15306, LSP14-15308, LSP14-15302 & LSP14-15303.
20. BOND LDW280M11246-11 TO LDW280M10003-3 WITH EPON 934 MIL-A-5090D AS PER LSP 14-22500, CURE RANGE #1. CURE AT ROOM TEMPERATURE.
21. SHIM AS REQD USING 2024-T3 BARE QQ-A-250/4, FIN 76.

KEY TO PURPOSE OF HOLES ETC MARKED REF

E19 REF	ELECTRICAL #19 (.165-.171)
P19 REF	PROPULSION #19 (.165-.171)
RCS19 REF	REACTION CONTROL SYSTEM #19 (.165-.171)
ECW19 REF	ENVIRONMENT CONTROL WATER #19 (.165-.171)

MANUFACTURING OPERATIONS UNLESS OTHERWISE SPECIFIED NOTES CHECKED ✓ APPLY TO THIS DWG.	
RUBBER STAMP PART NUMBER AND ALL OTHER MARKINGS IN REGION MARKED ⊠ USE BOTH SIDES IF NECESSARY.	✓
FILLET AND INSIDE CORNER RADII TOLERANCES .016R TO .062R ± .010 .063R TO .250R ± .015 OVER .250R ± .030	
DEPTH SHOWN FOR TAPPED HOLES IS FULL THDS. 2-3 IMP THDS. BEYOND PERMISSIBLE.	
EXTERNAL THREAD LENGTH SHOWN INCLUDES 2 IMPERFECT THREADS MAX.	
DO NOT CADMIUM PLATE & PAINT HOLES OR SURFACES MARKED WITH DOUBLE ASTERISK.	
MISMATCH STEP OF ± .005 PERMISSIBLE DUE TO CHANGE OF CUTTERS AT INSIDE INTERSECTING SURFACES.	
DIAMETERS MARKED MUST BE CONCENTRIC WITHIN FULL INDICATOR READING	
HOLES MUST BE KEPT FREE OF CHROME PLATING SOLUTION.	
ALL DIMENSIONS SHOWN TO BE MET AFTER CADMIUM PLATING. THICKNESS OF PLATE .0003 MIN. TO .0005 MAX MIN. THICKNESS TO BE .0002 ON THREADED AREAS. NO ALLOWANCE FOR PLATING IN HOLES	
125 SURFACE ROUGHNESS INCLUDING REAMED HOLES PER MIL-STD-10	
250 FOR ALL DRILLED HOLES	
REMOVE ALL BURRS. BREAK ALL EDGES .015-.031	
INSPECTION INFORMATION MINIMUM PERMISSIBLE ~~AVERAGE~~ EDGE DISTANCE ~~MARKED~~ IS 1½ FASTENER DIA FROM FASTENER ℄	✓
SYMBOL √ DENOTES SURFACE TO BE MACHINED	
UNLESS OTHERWISE SPECIFIED TOLERANCE ON FLANGES IS ± 1/32	
LENGTHS OF AN, NAS & MS AL ALY RIVETS SHORTER THAN 1 INCH ARE NOT SPECIFIED.	✓
TOLERANCE ON LOFTED DELINEATIONS IS	

DWG SIZE 40 X 142

PRINTING INFO ONLY
FULL SIZE SHEET AREA (42 X 144) = 42 SQ. FT.
1/2 SIZE SHEET AREA (1/4 OF FULL) = 10.5 SQ. FT.

PRINT TRIM LINE

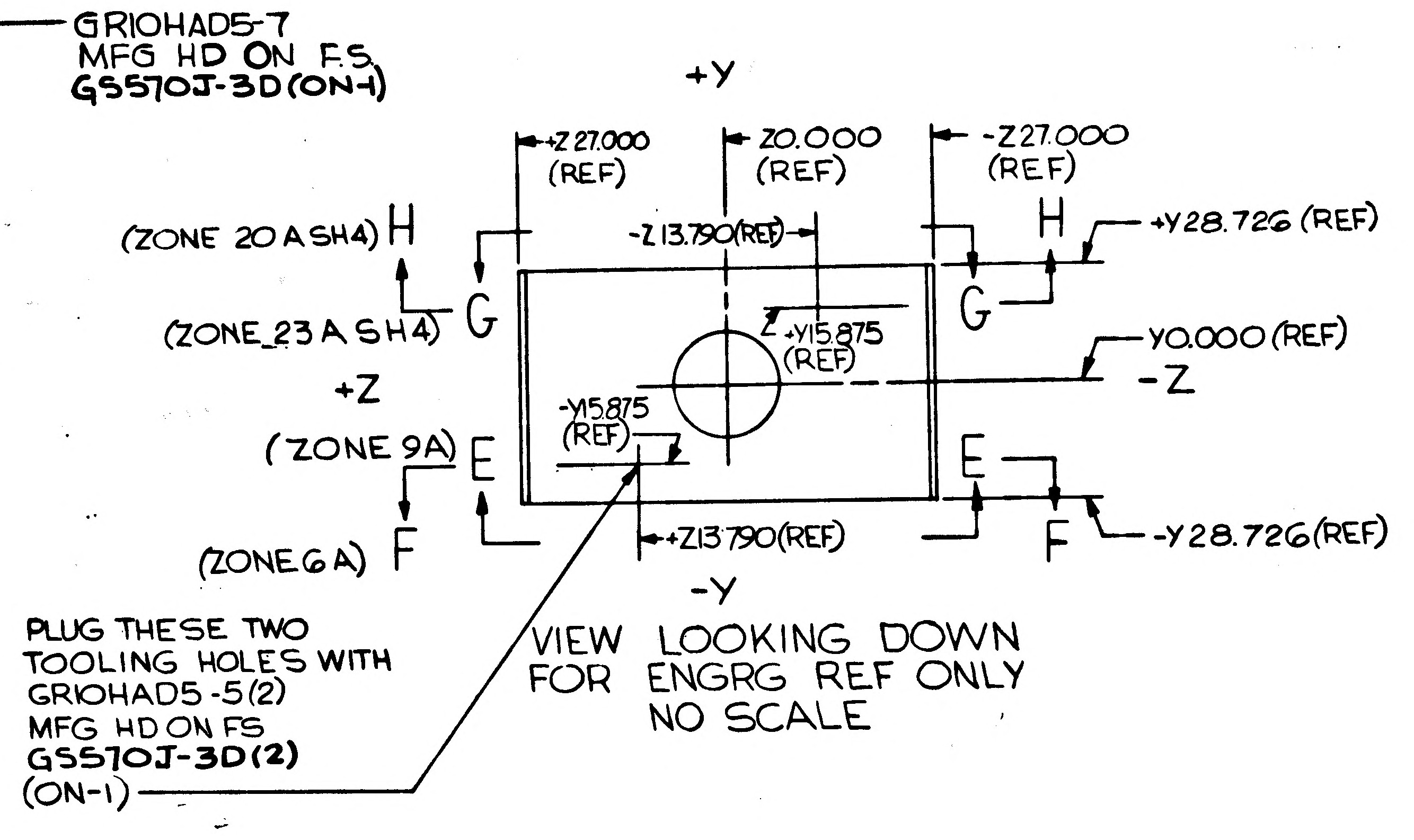

PLUG THESE TWO TOOLING HOLES WITH GR10HAD5-5(2) MFG HD ON FS GS570J-3D(2) (ON-1)

VIEW LOOKING DOWN
FOR ENGRG REF ONLY
NO SCALE

SYMBOL LEGEND

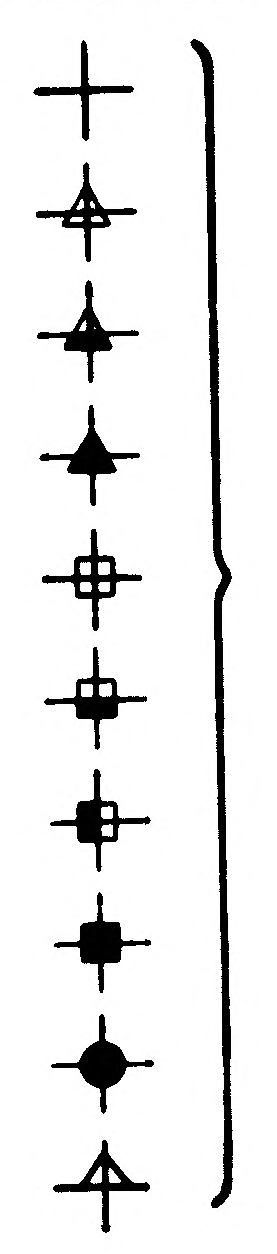

SYMBOLS ARE FOR LOCATION & QUANTITY ONLY

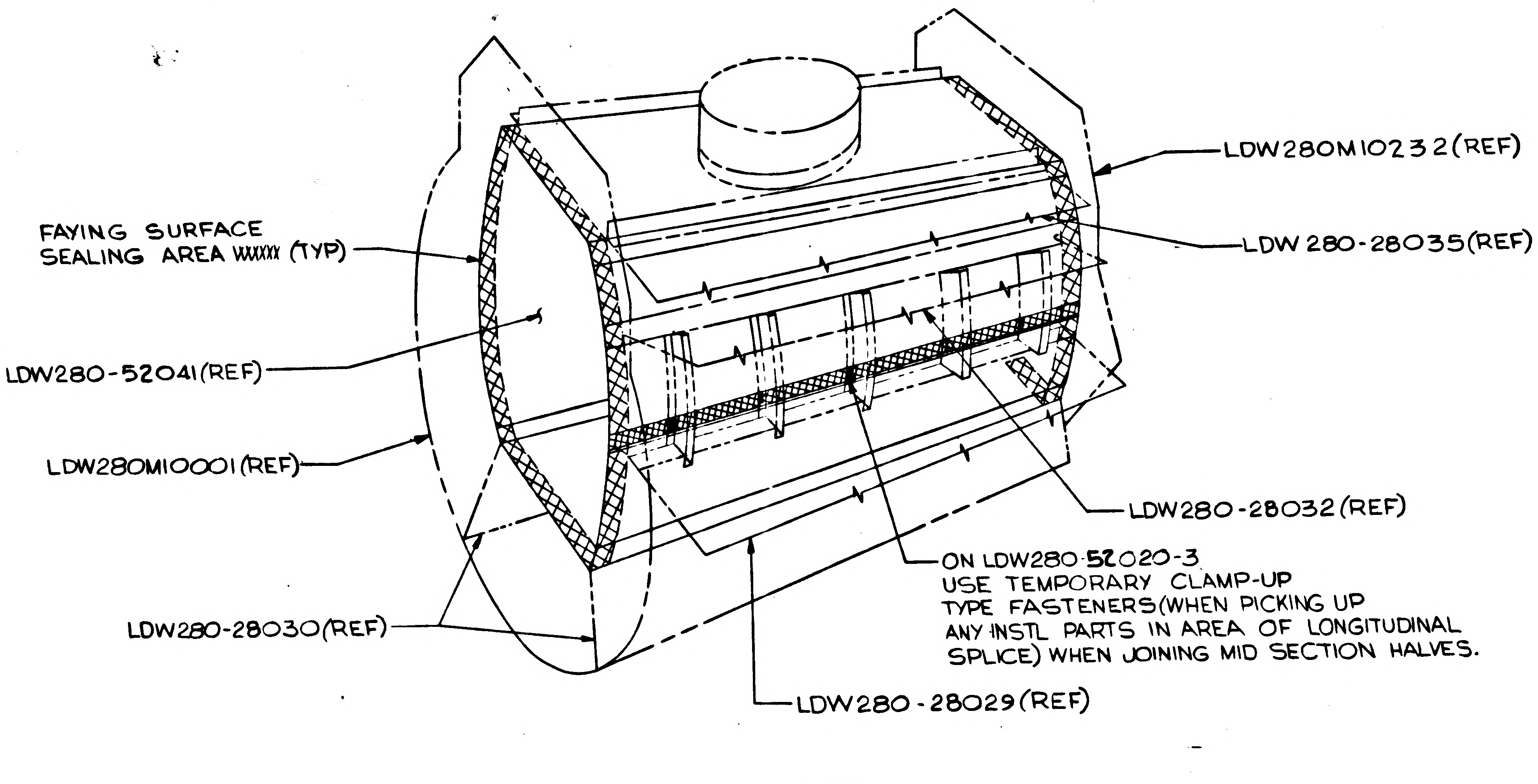

ON LDW280-52020-3
USE TEMPORARY CLAMP-UP
TYPE FASTENERS (WHEN PICKING UP
ANY INSTL PARTS IN AREA OF LONGITUDINAL
SPLICE) WHEN JOINING MID SECTION HALVES.

DETAIL AD

CODE IDENT NO 26512	SHEET
LDW280-52020	3

NAS 9-1100

05/05

	GRUMMAN AIRCRAFT ENGRG CORP., BETHPAGE, L. I., NEW YORK			
	SIZE K	CODE IDENT NO. 26512	LDW280-52020	J
LEM MODEL OR END ITEM	SCALE HALF		SHEET 3.00	

THIS IS AN ORIGINAL DRAWING

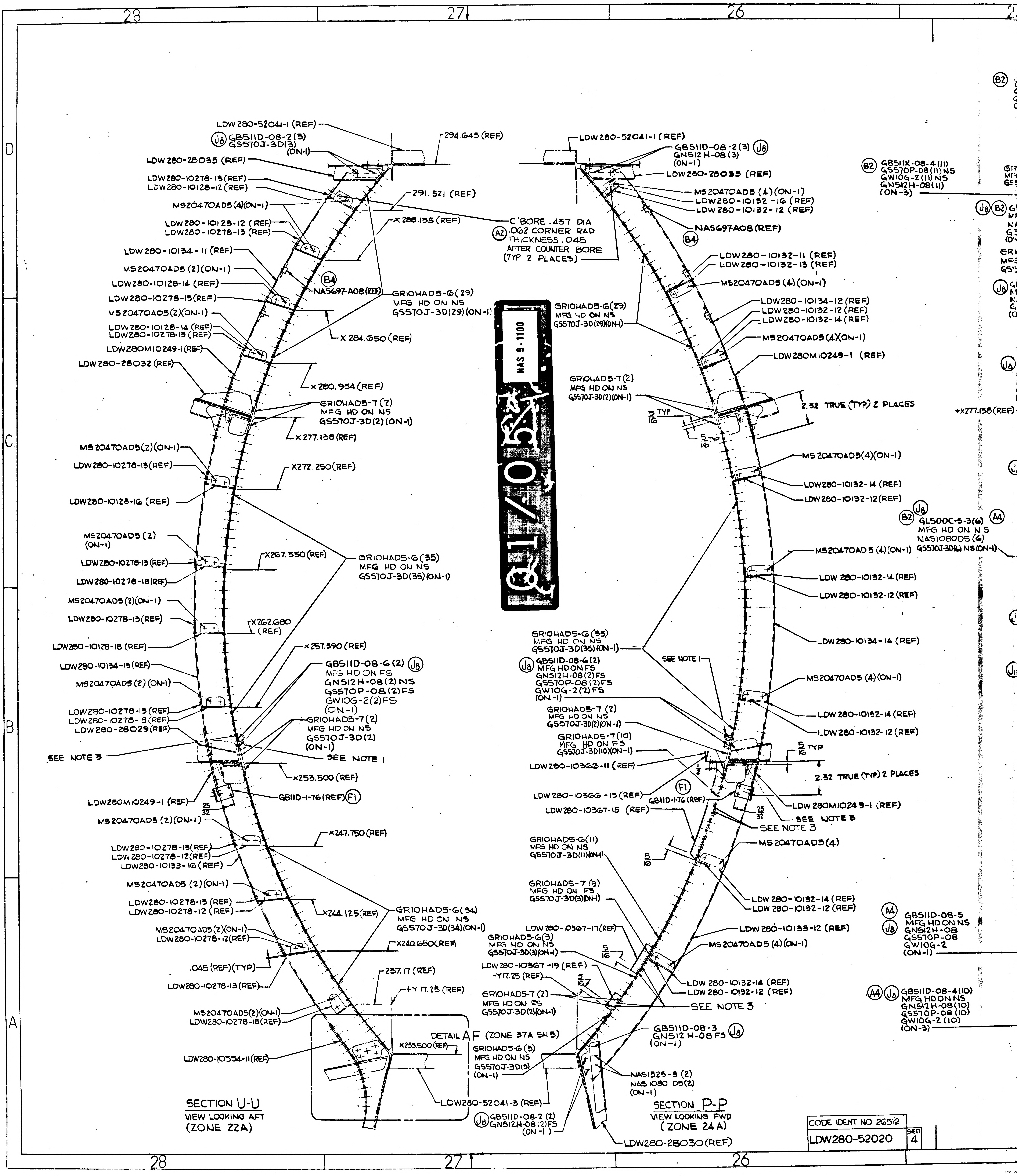
28
27
26
D
C
B
A
LDW280-52041-1 (REF)
J8 GB511D-08-2(3) GS570J-3D(3) (ON-1)
294.643 (REF)
LDW280-28035 (REF)
LDW280-10278-13(REF)
LDW280-10128-12(REF)
291.521 (REF)
MS20470AD5(4)(ON-1)
X288.135 (REF)
LDW280-10128-12 (REF)
LDW280-10278-13 (REF)
C'BORE .437 DIA
A2 .062 CORNER RAD
THICKNESS .045
AFTER COUNTER BORE
(TYP 2 PLACES)
LDW280-10134-11 (REF)
MS20470AD5 (2)(ON-1)
LDW280-10128-14 (REF)
LDW280-10278-13(REF)
MS20470AD5(2)(ON-1)
LDW280-10128-14 (REF)
LDW280-10278-13 (REF)
LDW280M10249-1(REF)
LDW280-28032 (REF)
B4 NAS697-A08(REF)
GRIOHAD5-G(29) MFG HD ON NS GS570J-3D(29)(ON-1)
X284.650 (REF)
X280.954 (REF)
GRIOHAD5-7(2) MFG HD ON NS GS570J-3D(2)(ON-1)
X277.138 (REF)
MS20470AD5(2)(ON-1)
LDW280-10278-13(REF)
X272.250(REF)
LDW280-10128-16 (REF)
MS20470AD5 (2) (ON-1)
LDW280-10278-13(REF)
LDW280-10278-18(REF)
X267.350(REF)
GRIOHAD5-G(35) MFG HD ON NS GS570J-3D(35)(ON-1)
MS20470AD5(2)(ON-1)
LDW280-10278-13(REF)
X262.680 (REF)
LDW280-10128-18 (REF)
X257.590 (REF)
LDW280-10134-13(REF)
MS20470AD5 (2) (ON-1)
GB511D-08-6(2) J8 MFG HD ON FS GN512H-08(2)NS GS570P-08(2)FS GW10G-2(2)FS (ON-1)
LDW280-10278-13 (REF)
LDW280-10278-18(REF)
LDW280-28029(REF)
GRIOHAD5-7(2) MFG HD ON NS GS570J-3D(2) (ON-1)
SEE NOTE 3
SEE NOTE 1
X253.500 (REF)
LDW280M10249-1 (REF)
GB11D-1-76(REF) F1
25/32
MS20470AD5 (2)(ON-1)
X247.750 (REF)
LDW280-10278-13(REF)
LDW280-10278-12(REF)
LDW280-10133-16(REF)
MS20470AD5 (2)(ON-1)
LDW280-10278-13 (REF)
LDW280-10278-12 (REF)
X244.125(REF)
GRIOHAD5-G(34) MFG HD ON NS GS570J-3D(34)(ON-1)
MS20470AD5(2)(ON-1)
LDW280-10278-12(REF)
X240.650(REF)
.045 (REF)(TYP)
LDW280-10278-13(REF)
237.17 (REF)
+Y 17.25 (REF)
MS20470AD5(2)(ON-1)
LDW280-10278-18(REF)
LDW280-10334-11(REF)
DETAIL AF (ZONE 37A SH 5)
X233.500(REF)
LDW280-52041-3 (REF)
SECTION U-U
VIEW LOOKING AFT
(ZONE 22A)
LDW280-52041-1 (REF)
GB511D-08-2(3) J8 GN512H-08(3) (ON-1)
LDW280-28035 (REF)
MS20470AD5 (4)(ON-1)
LDW280-10132-16 (REF)
LDW280-10132-12 (REF)
NAS697A08(REF)
B4
LDW280-10132-11 (REF)
LDW280-10132-13 (REF)
MS20470AD5 (4)(ON-1)
GRIOHAD5-G(29) MFG HD ON NS GS570J-3D(29)(ON-1)
LDW280-10134-12 (REF)
LDW280-10132-12 (REF)
LDW280-10132-14 (REF)
MS20470AD5(4)(ON-1)
LDW280M10249-1 (REF)
GRIOHAD5-7(2) MFG HD ON NS GS570J-3D(2)(ON-1)
2.32 TRUE (TYP) 2 PLACES
3/16 TYP
5/16 TYP
MS20470AD5(4)(ON-1)
LDW280-10132-14 (REF)
LDW280-10132-12(REF)
B2 J8 GL500C-5-3(6) A4 MFG HD ON NS NAS1080D5 (6) GS570J-3D(6) NS(ON-1)
MS20470AD5 (4)(ON-1)
LDW280-10132-14(REF)
LDW280-10132-12 (REF)
GRIOHAD5-G(35) MFG HD ON NS GS570J-3D(35)(ON-1)
J8 GB511D-08-6(2) MFG HD ON FS GN512H-08(2)FS GS570P-08(2)FS GW10G-2(2)FS (ON-1)
SEE NOTE 1
LDW280-10134-14 (REF)
MS20470AD5 (4)(ON-1)
GRIOHAD5-7 (2) MFG HD ON NS GS570J-3D(2)(ON-1)
GRIOHAD5-7(10) MFG HD ON FS GS570J-3D(10)(ON-1)
LDW280-10132-14 (REF)
LDW280-10132-12 (REF)
5/16 TYP
LDW280-10366-11 (REF)
2.32 TRUE (TYP) 2 PLACES
F1
LDW280-10366-13 (REF)
GB11D-1-76(REF)
LDW280-10367-15 (REF)
25/32
LDW280M10249-1 (REF)
SEE NOTE 3
SEE NOTE 3
MS20470AD5(4)
GRIOHAD5-G(11) MFG HD ON NS GS570J-3D(11)(ON-1)
5/16
GRIOHAD5-7 (3) MFG HD ON FS GS570J-3D(3)(ON-1)
LDW280-10132-14 (REF)
LDW280-10132-12 (REF)
LDW280-10367-17(REF)
LDW280-10133-12 (REF)
GRIOHAD5-G(3) MFG HD ON NS GS570J-3D(3)(ON-1)
5/16
MS20470AD5 (4)(ON-1)
LDW280-10367-19 (REF)
-Y17.25 (REF)
GRIOHAD5-7 (2) MFG HD ON FS GS570J-3D(2)(ON-1)
LDW280-10132-14 (REF)
LDW280-10132-12 (REF)
SEE NOTE 3
GRIOHAD5-G (5) MFG HD ON NS GS570J-3D(5) (ON-1)
GB511D-08-3 J8 GN512H-08 FS (ON-1)
NAS1525-3 (2) NAS1080 D5(2) (ON-1)
J8 GB511D-08-2 (2) GN512H-08(2)FS (ON-1)
LDW280-28030(REF)
SECTION P-P
VIEW LOOKING FWD
(ZONE 24A)
B2 GB511K-08-4(11) GS570P-08(11)NS GW10G-2(11)NS GN512H-08(11) (ON-3)
+X277.138(REF)
A4 J8 GB511D-08-5 MFG HD ON NS GN512H-08 GS570P-08 GW10G-2 (ON-1)
A4 J8 GB511D-08-4(10) MFG HD ON NS GN512H-08(10) GS570P-08(10) GW10G-2 (10) (ON-3)

CODE IDENT NO 26512

LDW280-52020 SHEET 4

Q1/05

NAS 9-1100

5/5

02405

NAS 9-1100

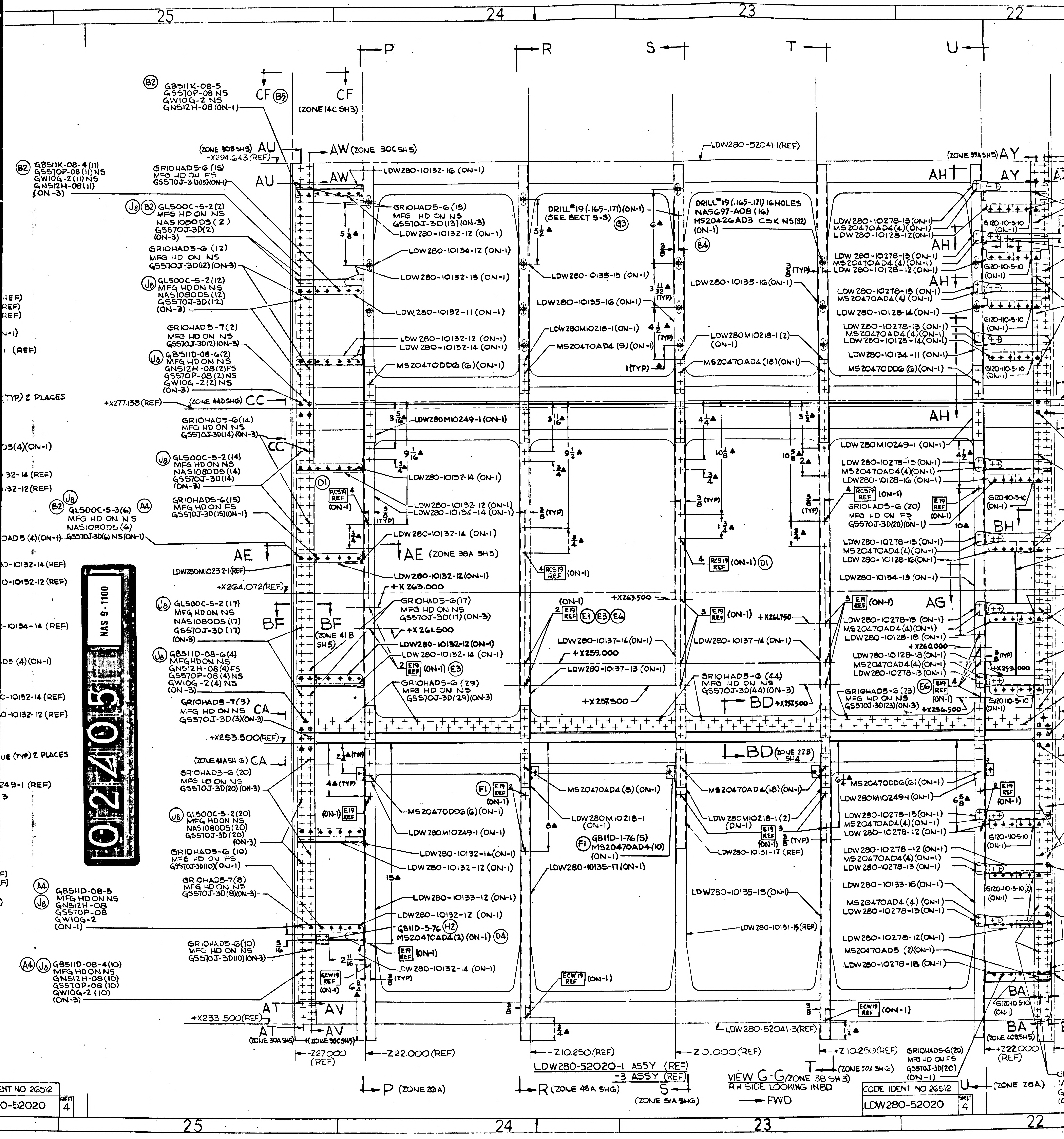
VIEW G-G (ZONE 3B SH3)
RH SIDE LOOKING INBD
FWD
LDW280-52020-1 ASSY (REF)
-3 ASSY (REF)
CODE IDENT NO 26512
LDW280-52020
SHEET 4
25
24
23
22
P
R
S
T
U
CF
CF (B5)
(ZONE 14C SH3)
(ZONE 30B SH5) AU
+X294.643 (REF)
AW (ZONE 30C SH5)
LDW280-52041-1 (REF)
(ZONE 59A SH5) AY
(B2) GB511K-08-5 GS570P-08 NS GW10G-2 NS GN512H-08 (ON-1)
(B2) GB511K-08-4 (11) GS570P-08 (11) NS GW10G-2 (11) NS GN512H-08 (11) (ON-3)
GR10HAD5-G (15) MFG HD ON FS GS570J-3D (15) (ON-1)
(J8) (B2) GL500C-5-2 (2) MFG HD ON NS NAS1080D5 (2) GS570J-3D (2) (ON-3)
GR10HAD5-G (12) MFG HD ON NS GS570J-3D (12) (ON-3)
(J8) GL500C-5-2 (12) MFG HD ON NS NAS1080D5 (12) GS570J-3D (12) (ON-3)
GR10HAD5-7 (2) MFG HD ON NS GS570J-3D (2) (ON-3)
(J8) GB511D-08-6 (2) MFG HD ON NS GN512H-08 (2) FS GS570P-08 (2) NS GW10G-2 (2) NS (ON-3)
(TYP) 2 PLACES
+X277.138 (REF)
(ZONE 44D SH6) CC
GR10HAD5-G (14) MFG HD ON NS GS570J-3D (14) (ON-3)
(J8) GL500C-5-2 (14) MFG HD ON NS NAS1080D5 (14) GS570J-3D (14) (ON-3)
GR10HAD5-G (15) MFG HD ON NS GS570J-3D (15) (ON-1)
(J8) (B2) GL500C-5-3 (6) (A4) MFG HD ON NS NAS1080D5 (6) GS570J-3D (6) NS (ON-1)
AE
LDW280M10232-1 (REF)
+X264.072 (REF)
(J8) GL500C-5-2 (17) MFG HD ON NS NAS1080D5 (17) GS570J-3D (17) (ON-3)
BF
BF (ZONE 41B SH5)
(J8) GB511D-08-6 (4) MFG HD ON NS GN512H-08 (4) FS GS570P-08 (4) NS GW10G-2 (4) NS (ON-3)
GR10HAD5-7 (3) MFG HD ON NS GS570J-3D (3) (ON-3)
CA
+X253.500 (REF)
(ZONE 44A SH6) CA
GR10HAD5-G (20) MFG HD ON NS GS570J-3D (20) (ON-3)
(J8) GL500C-5-2 (20) MFG HD ON NS NAS1080D5 (20) GS570J-3D (20) (ON-3)
GR10HAD5-G (10) MFG HD ON FS GS570J-3D (10) (ON-1)
GR10HAD5-7 (8) MFG HD ON NS GS570J-3D (8) (ON-3)
(A4) (J8) GB511D-08-5 MFG HD ON NS GN512H-08 GS570P-08 GW10G-2 (ON-1)
GR10HAD5-G (10) MFG HD ON NS GS570J-3D (10) (ON-3)
(A4) (J8) GB511D-08-4 (10) MFG HD ON NS GN512H-08 (10) GS570P-08 (10) GW10G-2 (10) (ON-3)
+X233.500 (REF)
AT
AT (ZONE 30A SH5)
AV
AV (ZONE 30C SH5)
-Z27.000 (REF)
-Z22.000 (REF)
-Z10.250 (REF)
Z0.000 (REF)
+Z10.250 (REF)
+Z22.000 (REF)
P (ZONE 26A)
R (ZONE 48A SH6)
S (ZONE 51A SH6)
T (ZONE 50A SH6)
U (ZONE 28A)
LDW280-10132-16 (ON-1)
GR10HAD5-G (13) MFG HD ON NS GS570J-3D (13) (ON-3)
LDW280-10132-12 (ON-1)
LDW280-10134-12 (ON-1)
LDW280-10132-13 (ON-1)
LDW280-10132-11 (ON-1)
LDW280-10132-12 (ON-1)
LDW280-10132-14 (ON-1)
MS20470DD6 (6) (ON-1)
5 1/8
DRILL #19 (.165-.171) (ON-1) (SEE SECT 9-5) (G3)
5 1/2
6
3/8
3 11/32 (TYP)
4 1/2 (TYP)
1 (TYP)
LDW280-10135-15 (ON-1)
LDW280-10135-16 (ON-1)
LDW280M10218-1 (ON-1)
MS20470AD4 (9) (ON-1)
DRILL #19 (.165-.171) 16 HOLES NAS697-A08 (16) MS20426AD3 CSK NS (32) (ON-1) (B4)
3/8 (TYP)
LDW280-10135-16 (ON-1)
LDW280M10218-1 (2) (ON-1)
MS20470AD4 (18) (ON-1)
AH
LDW280-10278-13 (ON-1)
MS20470AD4 (4) (ON-1)
LDW280-10128-12 (ON-1)
LDW280-10278-13 (ON-1)
MS20470AD4 (4) (ON-1)
LDW280-10128-12 (ON-1)
LDW280-10278-13 (ON-1)
MS20470AD4 (4) (ON-1)
LDW280-10128-14 (ON-1)
LDW280-10278-13 (ON-1)
MS20470AD4 (4) (ON-1)
LDW280-10128-14 (ON-1)
LDW280-10134-11 (ON-1)
MS20470DD6 (6) (ON-1)
G120-110-5-10 (ON-1)
3 5/16
LDW280M10249-1 (ON-1)
3 11/16
4 1/4
3 1/2
9 1/16
9 1/2
10 5/8
10 5/8
2
LDW280-10132-14 (ON-1)
LDW280-10132-12 (ON-1)
LDW280-10134-14 (ON-1)
3/8 (TYP)
(D1)
RCS19 REF 4 (ON-1)
LDW280-10132-14 (ON-1)
AE (ZONE 38A SH5)
LDW280-10132-12 (ON-1)
+X263.000
4 RCS19 REF (ON-1)
4 RCS19 REF (ON-1) (D1)
GR10HAD5-G (17) MFG HD ON NS GS570J-3D (17) (ON-3)
+X261.500
LDW280-10132-12 (ON-1)
LDW280-10132-14 (ON-1)
2 E19 REF (ON-1) (E3)
GR10HAD5-G (29) MFG HD ON NS GS570J-3D (29) (ON-3)
(ON-1) 2 E19 REF (E1) (E3) (E6)
+X263.500
LDW280-10137-14 (ON-1)
+X259.000
LDW280-10137-13 (ON-1)
+X257.500
3 E19 REF (ON-1) +X261.750
LDW280-10137-14 (ON-1)
GR10HAD5-G (44) MFG HD ON NS GS570J-3D (44) (ON-3)
BD +X257.500
BD (ZONE 22B SH4)
LDW280M10249-1 (ON-1)
LDW280-10278-13 (ON-1)
MS20470AD4 (4) (ON-1)
LDW280-10128-16 (ON-1)
4 RCS19 REF (ON-1)
GR10HAD5-G (20) MFG HD ON FS GS570J-3D (20) (ON-1)
E19 REF (ON-1)
10
BH
LDW280-10278-13 (ON-1)
MS20470AD4 (4) (ON-1)
LDW280-10128-16 (ON-1)
LDW280-10134-13 (ON-1)
3 E19 REF (ON-1)
AG
LDW280-10278-13 (ON-1)
MS20470AD4 (4) (ON-1)
LDW280-10128-18 (ON-1)
+X260.000
LDW280-10128-18 (ON-1)
MS20470AD4 (4) (ON-1)
LDW280-10128-13 (ON-1)
+X259.000
GR10HAD5-G (23) MFG HD ON NS GS570J-3D (23) (ON-3)
(E6) E19 REF 4 (ON-1)
+X256.500
2 1/4 (TYP)
4 (TYP)
(ON-1) E19 REF
(F1) E19 REF 2 (ON-1)
MS20470DD6 (6) (ON-1)
LDW280M10249-1 (ON-1)
LDW280-10132-14 (ON-1)
LDW280-10132-12 (ON-1)
MS20470AD4 (8) (ON-1)
LDW280M10218-1 (ON-1)
8
(F1) GB11D-1-76 (5) MS20470AD4 (10) (ON-1)
LDW280-10135-17 (ON-1)
MS20470AD4 (18) (ON-1)
LDW280M10218-1 (2) (ON-1)
E19 REF 3 (ON-1) 3/8 (TYP)
LDW280-10131-17 (REF)
LDW280-10135-18 (ON-1)
LDW280-10131-15 (REF)
6 1/4 MS20470DD6 (6) (ON-1)
LDW280M10249-1 (ON-1)
6 5/8
2 E19 REF (ON-1)
LDW280-10278-13 (ON-1)
MS20470AD4 (4) (ON-1)
LDW280-10278-12 (ON-1)
LDW280-10278-12 (ON-1)
MS20470AD4 (4) (ON-1)
LDW280-10278-13 (ON-1)
LDW280-10133-16 (ON-1)
MS20470AD4 (4) (ON-1)
LDW280-10278-13 (ON-1)
LDW280-10278-12 (ON-1)
MS20470AD5 (2) (ON-1)
LDW280-10278-18 (ON-1)
G120-110-5-10 (2) (ON-1)
15
LDW280-10133-12 (ON-1)
LDW280-10132-12 (ON-1)
GB11D-5-76 (H2)
MS20470AD4 (2) (ON-1) (D4)
E19 REF (ON-1)
LDW280-10132-14 (ON-1)
3 5/16
2 11/16
ECW19 REF (ON-1)
6 3/4
3/8 (TYP)
ECW19 REF (ON-1)
ECW19 REF (ON-1)
LDW280-52041-3 (REF)
3/8
3/4
1/2
BA
BA (ZONE 40B SH5)
GR10HAD5-G (20) MFG HD ON FS GS570J-3D (20) (ON-1)

03/05 NAS 9-1100

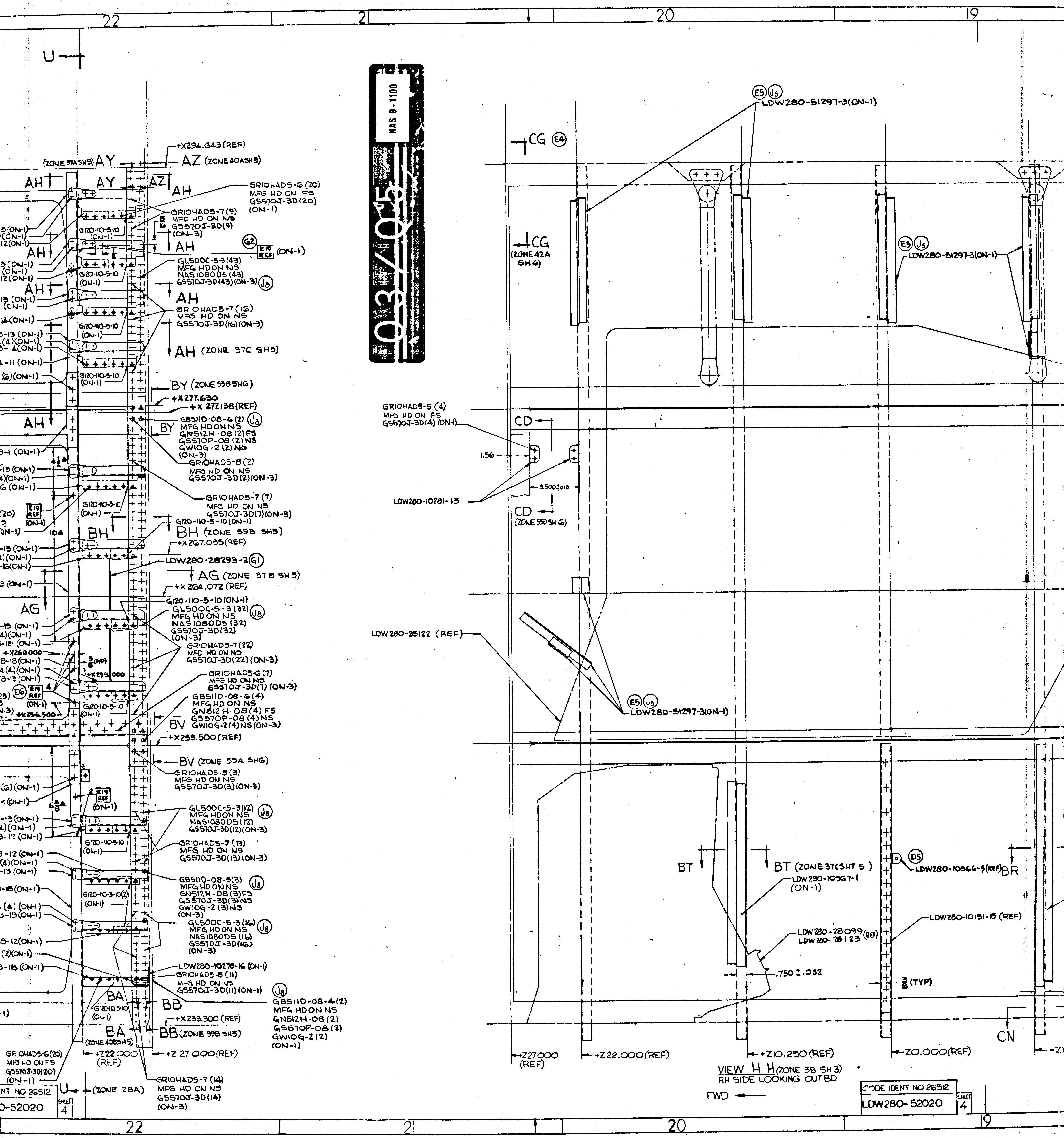

U
+X294.643 (REF)
AZ (ZONE 40A SH5)
(ZONE 59A SH5) AY
GRIOHAD5-G (20) MFG HD ON FS G5570J-3D (20) (ON-1)
GRIOHAD5-7 (9) MFD HD ON NS G5570J-3D (9) (ON-3)
GL500C-5-3 (43) MFG HD ON NS NAS1080D5 (43) G5570J-3D (43) (ON-3)
GRIOHAD5-7 (16) MFG HD ON NS G5570J-3D (16) (ON-3)
AH (ZONE 37C SH5)
BY (ZONE 55B SH6)
+X277.630
+X 277.138 (REF)
GB511D-08-6 (2) MFG HD ON NS GN512H-08 (2) FS G5570P-08 (2) NS GW10G-2 (2) NS (ON-3)
GRIOHAD5-8 (2) MFG HD ON NS G5570J-3D (2) (ON-3)
GRIOHAD5-7 (7) MFG HD ON NS G5570J-3D (7) (ON-3)
G120-110-5-10 (ON-1)
BH (ZONE 59B SH5)
+X267.035 (REF)
LDW280-28293-2
+X264.072 (REF)
AG (ZONE 37B SH5)
G120-110-5-10 (ON-1)
GL500C-5-3 (32) MFG HD ON NS NAS1080D5 (32) G5570J-3D (32) (ON-3)
GRIOHAD5-7 (22) MFD HD ON NS G5570J-3D (22) (ON-3)
GRIOHAD5-G (7) MFG HD ON NS G5570J-3D (7) (ON-3)
GB511D-08-6 (4) MFG HD ON NS GN512H-08 (4) FS G5570P-08 (4) NS GW10G-2 (4) NS (ON-3)
+X253.500 (REF)
BV (ZONE 55A SH6)
GRIOHAD5-8 (3) MFG HD ON NS G5570J-3D (3) (ON-3)
GL500C-5-3 (12) MFG HD ON NS NAS1080D5 (12) G5570J-3D (12) (ON-3)
GRIOHAD5-7 (13) MFG HD ON NS G5570J-3D (13) (ON-3)
GB511D-08-5 (3) MFG HD ON NS GN512H-08 (3) FS G5570J-3D (3) NS GW10G-2 (3) NS (ON-3)
GL500C-5-3 (16) MFG HD ON NS NAS1080D5 (16) G5570J-3D (16) (ON-3)
LDW280-10278-16 (ON-1)
GRIOHAD5-8 (11) MFG HD ON NS G5570J-3D (11) (ON-1)
GB511D-08-4 (2) MFG HD ON NS GN512H-08 (2) G5570P-08 (2) GW10G-2 (2) (ON-1)
+X233.500 (REF)
BB (ZONE 39B SH5)
BA (ZONE 40B SH5)
+Z22.000 (REF)
+Z 27.000 (REF)
GRIOHAD5-G (20) MFG HD ON FS G5570J-3D (20) (ON-1)
GRIOHAD5-7 (14) MFG HD ON NS G5570J-3D (14) (ON-3)
(ZONE 28A)
CG
(ZONE 42A SH6)
LDW280-51297-3 (ON-1)
GRIOHAD5-5 (4) MFG HD ON FS G5570J-3D (4) (ON-1)
CD
(ZONE 55D SH 6)
1.56
3.500±.010
LDW280-10281-13
LDW280-28122 (REF)
BT
BT (ZONE 37C SHT 5)
LDW280-10367-1 (ON-1)
LDW280-28099 (REF)
LDW280-28123
.750 ±.032
LDW280-10366-5 (REF)
BR
LDW280-10131-15 (REF)
3/8 (TYP)
CN
+Z27.000 (REF)
+Z22.000 (REF)
+Z10.250 (REF)
Z0.000 (REF)
VIEW H-H (ZONE 3B SH 3)
RH SIDE LOOKING OUTBD
FWD
22
21
20
19

CODE IDENT NO 26512
LDW280-52020
SHEET 4

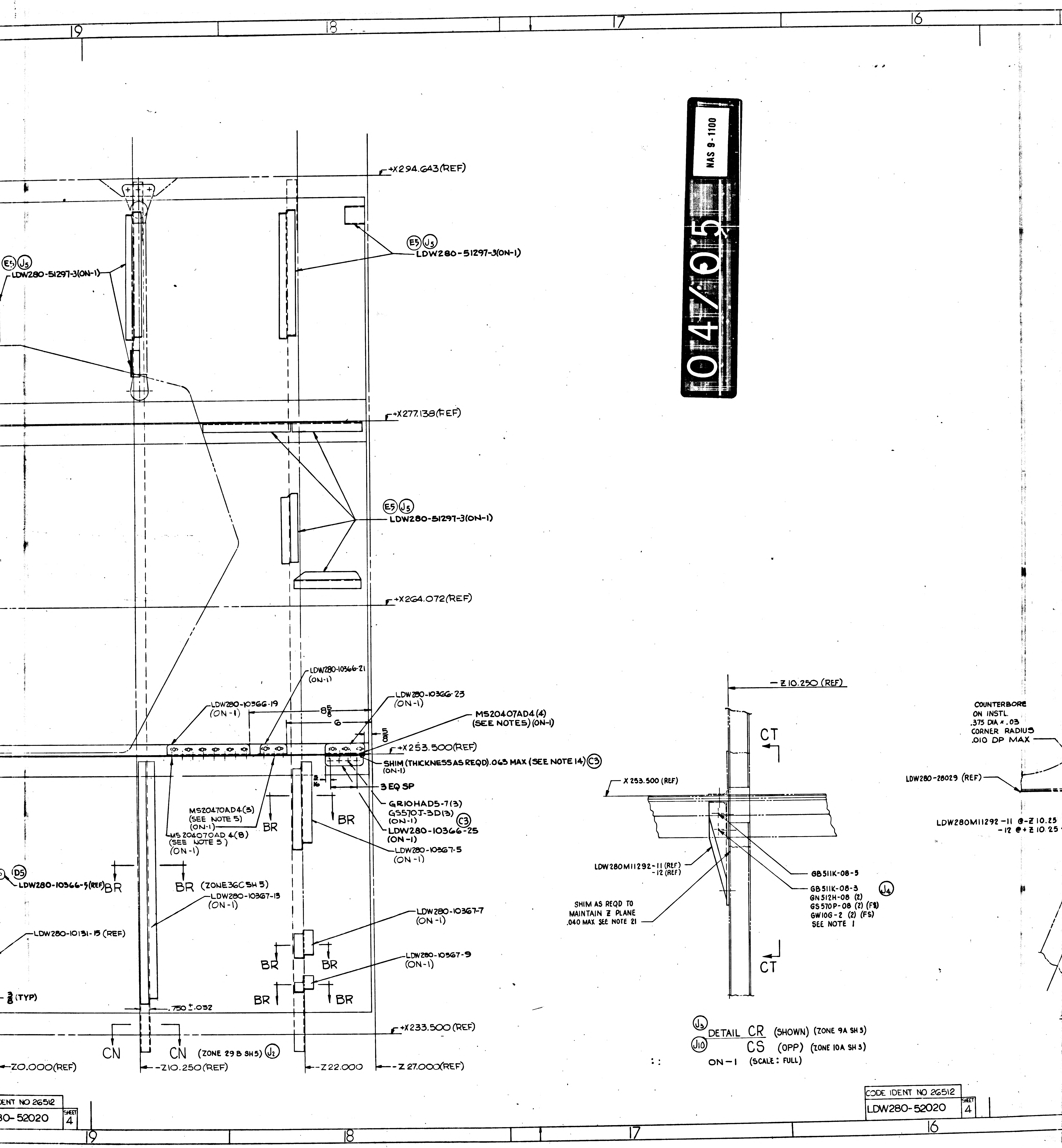
19
18
17
16
04/05
NAS 9-1100
+X294.643(REF)
E5 J5 LDW280-51297-3(ON-1)
E5 J5 LDW280-51297-3(ON-1)
+X277.138(REF)
E5 J5 LDW280-51297-3(ON-1)
+X264.072(REF)
LDW280-10366-21 (ON-1)
LDW280-10366-19 (ON-1)
LDW280-10366-23 (ON-1)
MS20407AD4(4) (SEE NOTES)(ON-1)
8⅝
6
.0815
+X253.500(REF)
SHIM (THICKNESS AS REQD).063 MAX (SEE NOTE 14) C3 (ON-1)
3 EQ SP
GR10HAD5-7(3)
GS570J-3D(3) (ON-1) C3
LDW280-10366-25 (ON-1)
LDW280-10367-5 (ON-1)
MS20470AD4(5) (SEE NOTE 5) (ON-1)
MS20470AD4(8) (SEE NOTE 5) (ON-1)
BR
BR
D5 LDW280-10366-5(REF) BR
BR (ZONE 36C SH 5)
LDW280-10367-13 (ON-1)
LDW280-10131-15 (REF)
LDW280-10367-7 (ON-1)
LDW280-10367-9 (ON-1)
BR
BR
BR
BR
⅜ (TYP)
.750 ±.032
+X233.500 (REF)
CN
CN (ZONE 29B SH5) J2
Z0.000(REF)
-Z10.250(REF)
-Z22.000
-Z27.000(REF)
-Z10.250 (REF)
CT
CT
X 253.500 (REF)
LDW280M11292-11 (REF) -12 (REF)
SHIM AS REQD TO MAINTAIN Z PLANE .040 MAX SEE NOTE 21
GB511K-08-5
GB511K-08-3
GN512H-08 (2)
GS570P-08 (2) (FS)
GW10G-2 (2) (FS)
SEE NOTE 1
J4
J3 DETAIL CR (SHOWN) (ZONE 9A SH 3)
J10 CS (OPP) (ZONE 10A SH 3)
ON-1 (SCALE: FULL)
COUNTERBORE ON INSTL. .375 DIA × .03 CORNER RADIUS .010 DP MAX
LDW280-28029 (REF)
LDW280M11292-11 @-Z10.25 -12 @+Z10.25
CODE IDENT NO 26512
LDW280-52020
SHEET 4

51297-3(ON-1)

ON-1)

M520407AD4(4)
SEE NOTES)(ON-1)

QD).063 MAX (SEE NOTE 14) Ⓒ3

-7

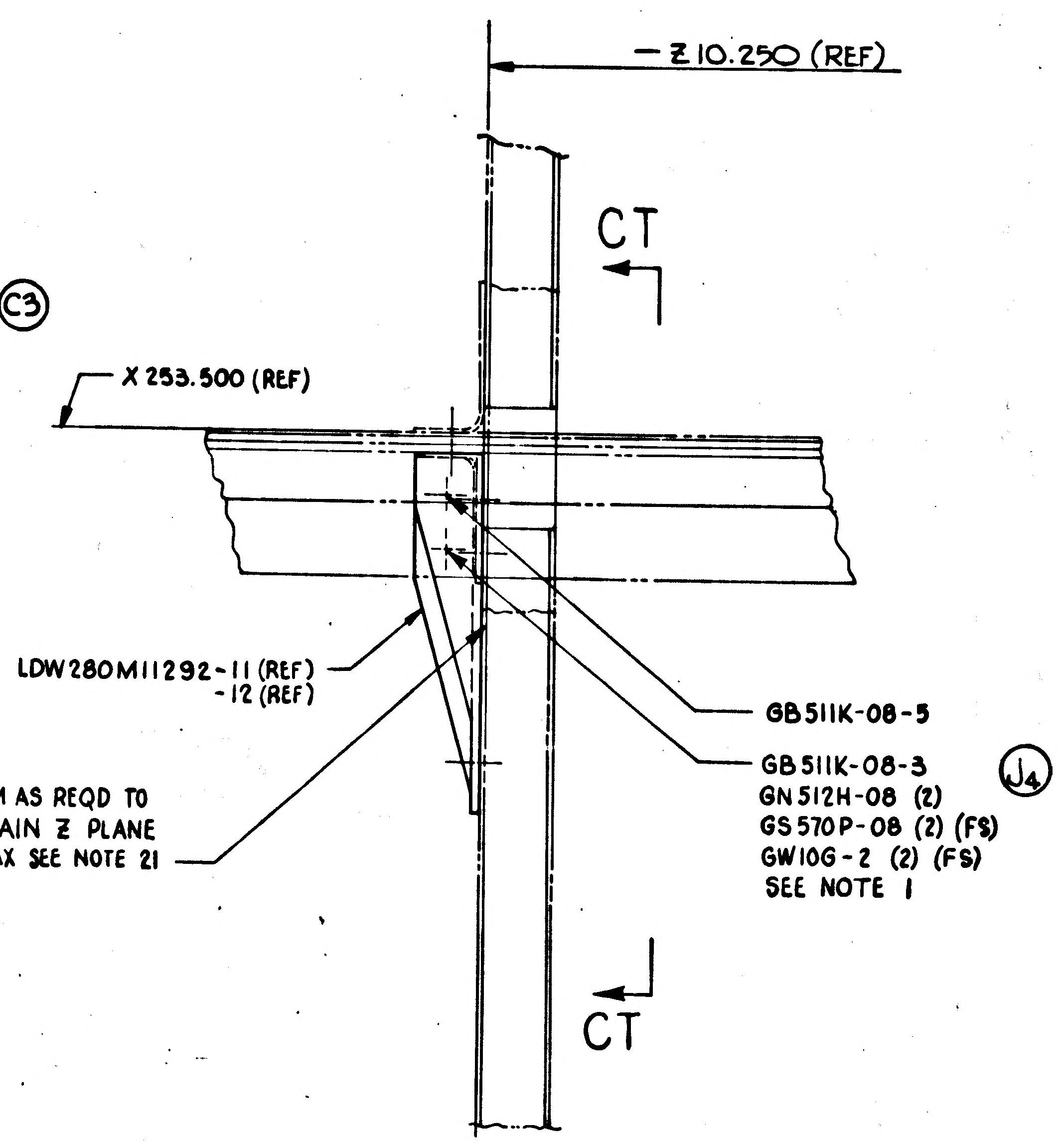

— Z 10.250 (REF)
X 253.500 (REF)
CT
CT
LDW280M11292-11 (REF)
-12 (REF)
SHIM AS REQD TO
MAINTAIN Z PLANE
.040 MAX SEE NOTE 21
GB511K-08-5
GB511K-08-3
GN512H-08 (2)
GS570P-08 (2) (FS)
GW10G-2 (2) (FS)
SEE NOTE 1
Ⓙ4

Ⓙ3 DETAIL CR (SHOWN) (ZONE 9A SH 3)
Ⓙ10 CS (OPP) (ZONE 10A SH 3)
ON-1 (SCALE: FULL)

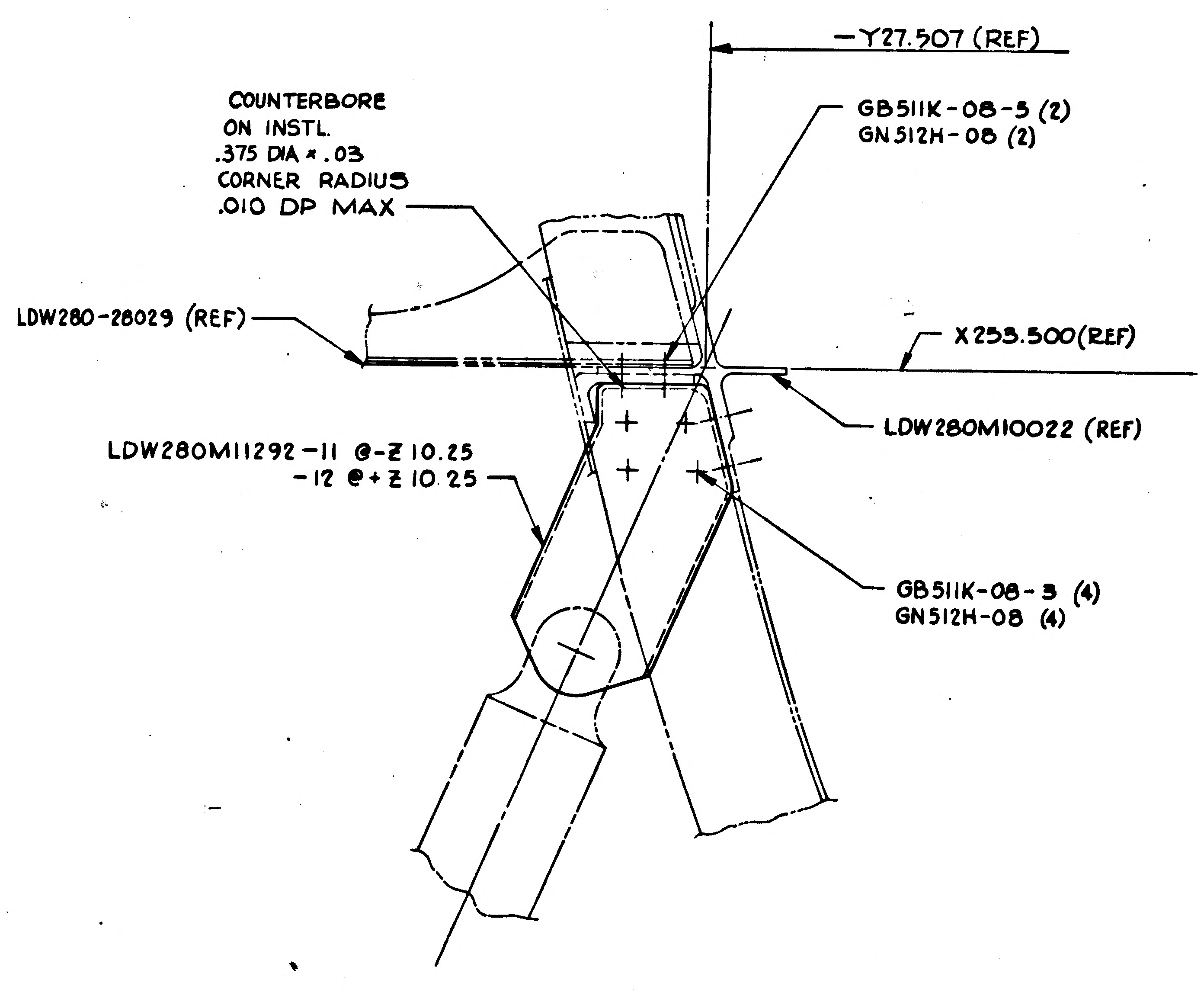

—Y27.507 (REF)
COUNTERBORE
ON INSTL.
.375 DIA ×.03
CORNER RADIUS
.010 DP MAX
GB511K-08-5 (2)
GN512H-08 (2)
LDW280-28029 (REF)
X 253.500(REF)
LDW280M10022 (REF)
LDW280M11292-11 @-Z 10.25
-12 @+Z 10.25
GB511K-08-5 (4)
GN512H-08 (4)

SECTION CT-CT
(ZONE 17A) Ⓙ3 Ⓙ10

MANUFACTURING OPERATIONS UNLESS OTHERWISE SPECIFIED NOTES CHECKED ✓ APPLY TO THIS DWG.	
PART NUMBER AND ALL OTHER MARKINGS IN REGION MARKED ▭ USE BOTH SIDES IF NECESSARY.	
FILLET AND INSIDE CORNER RADII TOLERANCES .016R TO .062R ± .010 .063R TO .250R ± .015 OVER .250R ± .030	
DEPTH SHOWN FOR TAPPED HOLES IS FULL THDS. 2-3 IMP THDS. BEYOND PERMISSIBLE.	
EXTERNAL THREAD LENGTH SHOWN INCLUDES 2 IMPERFECT THREADS MAX.	
DO NOT CADMIUM PLATE & PAINT HOLES OR SURFACES MARKED WITH DOUBLE ASTERISK.	
MISMATCH STEP OF ± .005 PERMISSIBLE DUE TO CHANGE OF CUTTERS AT INSIDE INTERSECTING SURFACES.	
DIAMETERS MARKED MUST BE CONCENTRIC WITHIN FULL INDICATOR READING	
HOLES MUST BE KEPT FREE OF CHROME PLATING SOLUTION.	
ALL DIMENSIONS SHOWN TO BE MET AFTER CADMIUM PLATING. THICKNESS OF PLATE .0003 MIN. TO .0005 MAX MIN THICKNESS TO BE .0002 ON THREADED AREAS. NO ALLOWANCE FOR PLATING IN HOLES	
125 ▽ SURFACE ROUGHNESS INCLUDING REAMED HOLES PER MIL-STD-10	
200 ▽ FOR ALL DRILLED HOLES	
REMOVE ALL BURRS. BREAK ALL EDGES .015-.031	
INSPECTION INFORMATION MINIMUM PERMISSIBLE AVERAGE EDGE DISTANCE MARKED IS	
SYMBOL ✓ DENOTES SURFACE TO BE MACHINED	
UNLESS OTHERWISE SPECIFIED TOLERANCE ON FLANGES IS ± 1/32	
LENGTHS OF AN, NAS & MS AL ALY RIVETS SHORTER THAN 1 INCH ARE NOT SPECIFIED.	
TOLERANCE ON LOFTED DELINEATIONS IS	

DWG SIZE 40 X 142

PRINTING INFO ONLY
FULL SIZE SHEET AREA (42 X144) = 42 SQ. FT.
1/2 SIZE SHEET AREA (1/4 OF FULL) = 10.500 FT

PRINT TRIM LINE

05/05
NAS 9-1100

LDW280-52020 J

LDW280-52020 J

CODE IDENT NO 26512
LDW280-52020 SHEET 4

	GRUMMAN AIRCRAFT ENGRG CORP., BETHPAGE, L. I., NEW YORK			
	SIZE K	CODE IDENT NO. 26512	LDW280-52020	J
LEM MODEL OR END ITEM	SCALE HALF		SHEET 4.00	

THIS IS AN ORIGINAL DRAWING

01/03 NAS 9-1100

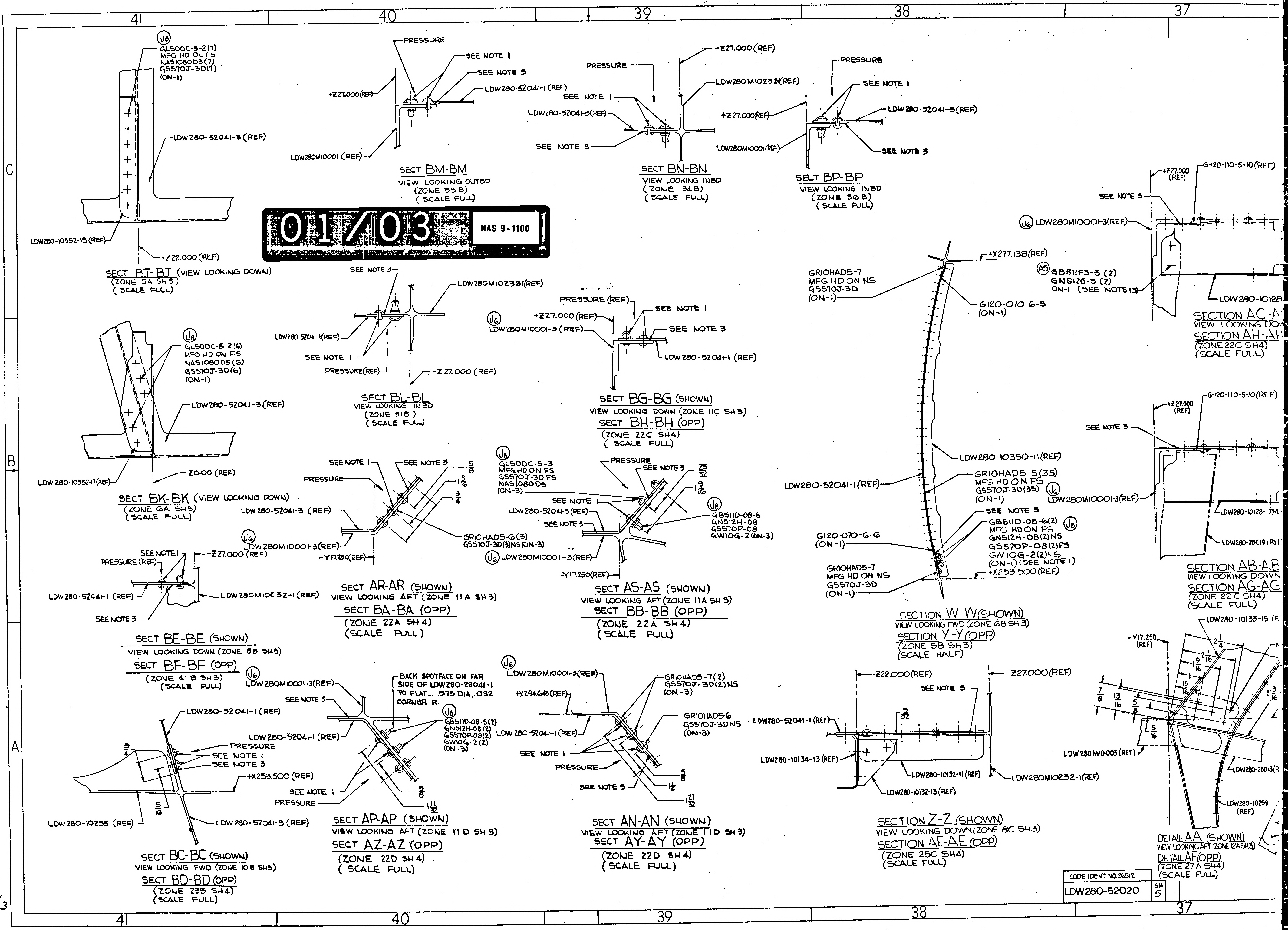

SECT BJ-BJ (VIEW LOOKING DOWN)
(ZONE 5A SH 3)
(SCALE FULL)

SECT BM-BM
VIEW LOOKING OUTBD
(ZONE 33 B)
(SCALE FULL)

SECT BN-BN
VIEW LOOKING INBD
(ZONE 34 B)
(SCALE FULL)

SELT BP-BP
VIEW LOOKING INBD
(ZONE 36 B)
(SCALE FULL)

SECTION AC-A
VIEW LOOKING DOW
SECTION AH-AH
(ZONE 22C SH4)
(SCALE FULL)

SECT BK-BK (VIEW LOOKING DOWN)
(ZONE 6A SH3)
(SCALE FULL)

SECT BL-BL
VIEW LOOKING INBD
(ZONE 51B)
(SCALE FULL)

SECT BG-BG (SHOWN)
VIEW LOOKING DOWN (ZONE 11C SH 3)
SECT BH-BH (OPP)
(ZONE 22C SH4)
(SCALE FULL)

SECTION W-W (SHOWN)
VIEW LOOKING FWD (ZONE 6B SH 3)
SECTION Y-Y (OPP)
(ZONE 5B SH3)
(SCALE HALF)

SECTION AB-AB
VIEW LOOKING DOWN
SECTION AG-AG
(ZONE 22 C SH4)
(SCALE FULL)

SECT AR-AR (SHOWN)
VIEW LOOKING AFT (ZONE 11A SH 3)
SECT BA-BA (OPP)
(ZONE 22A SH 4)
(SCALE FULL)

SECT AS-AS (SHOWN)
VIEW LOOKING AFT (ZONE 11A SH 3)
SECT BB-BB (OPP)
(ZONE 22A SH 4)
(SCALE FULL)

SECT BE-BE (SHOWN)
VIEW LOOKING DOWN (ZONE 8B SH3)
SECT BF-BF (OPP)
(ZONE 41 B SH 3)
(SCALE FULL)

SECT BC-BC (SHOWN)
VIEW LOOKING FWD (ZONE 10 B SH3)
SECT BD-BD (OPP)
(ZONE 23B SH 4)
(SCALE FULL)

SECT AP-AP (SHOWN)
VIEW LOOKING AFT (ZONE 11 D SH 3)
SECT AZ-AZ (OPP)
(ZONE 22D SH 4)
(SCALE FULL)

SECT AN-AN (SHOWN)
VIEW LOOKING AFT (ZONE 11 D SH 3)
SECT AY-AY (OPP)
(ZONE 22D SH 4)
(SCALE FULL)

SECTION Z-Z (SHOWN)
VIEW LOOKING DOWN (ZONE 8C SH3)
SECTION AE-AE (OPP)
(ZONE 25C SH4)
(SCALE FULL)

DETAIL AA (SHOWN)
VIEW LOOKING AFT (ZONE 12A SH3)
DETAIL AF (OPP)
(ZONE 27 A SH4)
(SCALE FULL)

41
40
39
38
37
C
B
A
(J8)
GL500C-5-2(7)
MFG HD ON FS
NAS1080D5(7)
GS570J-3D(7)
(ON-1)
LDW280-52041-3 (REF)
LDW280-10352-15 (REF)
+Z 22.000 (REF)
PRESSURE
SEE NOTE 1
SEE NOTE 3
LDW280-52041-1 (REF)
+Z 27.000 (REF)
LDW280M10001 (REF)
-Z 27.000 (REF)
LDW280M10232(REF)
SEE NOTE 1
LDW280-52041-3(REF)
SEE NOTE 3
PRESSURE
SEE NOTE 1
LDW280-52041-3 (REF)
+Z 27.000 (REF)
LDW280M10001 (REF)
SEE NOTE 3
+Z 27.000 (REF)
G-120-110-5-10 (REF)
SEE NOTE 3
(J6) LDW280M10001-3(REF)
(A5) GB511F3-3 (2)
GN512G-3 (2)
ON-1 (SEE NOTE 13)
LDW280-10128
(J8)
GL500C-5-2(6)
MFG HD ON FS
NAS1080D5 (6)
GS570J-3D(6)
(ON-1)
LDW280-52041-3 (REF)
LDW280-10352-17 (REF)
Z0.00 (REF)
SEE NOTE 3
LDW280M10232-1(REF)
LDW280-52041-1(REF)
SEE NOTE 1
PRESSURE(REF)
-Z 27.000 (REF)
PRESSURE (REF)
(J6)
+Z 27.000 (REF)
LDW280M10001-3 (REF)
SEE NOTE 1
SEE NOTE 3
LDW280-52041-1 (REF)
GR10HAD5-7
MFG HD ON NS
GS570J-3D
(ON-1)
+X277.138 (REF)
G120-070-6-5
(ON-1)
LDW280-10350-11 (REF)
LDW280-52041-1 (REF)
GR10HAD5-5 (35)
MFG HD ON FS
GS570J-3D (35)
(ON-1)
SEE NOTE 3
GB511D-08-6(2) (J8)
MFG HD ON FS
GN512H-08(2)NS
GS570P-08(2)FS
GW10G-2(2)FS
(ON-1) (SEE NOTE 1)
+X253.500 (REF)
G120-070-6-6
(ON-1)
GR10HAD5-7
MFG HD ON NS
GS570J-3D
(ON-1)
+Z 27.000 (REF)
G-120-110-5-10 (REF)
SEE NOTE 3
(J6) LDW280M10001-3(REF)
LDW280-10128-17(REF)
LDW280-28C19 (REF)
SEE NOTE 1
SEE NOTE 3
5/8
PRESSURE
1 3/16
1 3/4
LDW280-52041-3 (REF)
(J6) LDW280M10001-3(REF)
-Y17.250 (REF)
GR10HAD5-6(3)
GS570J-3D(3)NS(ON-3)
(J8)
GL500C-5-3
MFG HD ON FS
GS570J-3D FS
NAS1080D5
(ON-3)
PRESSURE
SEE NOTE 3
25/32
1 9/16
SEE NOTE 1
LDW280-52041-3 (REF)
SEE NOTE 3
(J8)
GB511D-08-5
GN512H-08
GS570P-08
GW10G-2 (ON-3)
(J6) LDW280M10001-3 (REF)
-Y17.250 (REF)
SEE NOTE 1
PRESSURE (REF)
-Z 27.000 (REF)
LDW280-52041-1 (REF)
LDW280M10232-1 (REF)
SEE NOTE 3
(J6)
LDW280M10001-3(REF)
SEE NOTE 3
BACK SPOTFACE ON FAR SIDE OF LDW280-28041-1 TO FLAT... .375 DIA, .032 CORNER R.
(J8)
GB511D-08-5(2)
GN512H-08(2)
GS570P-08(2)
GW10G-2 (2)
(ON-3)
LDW280-52041-1 (REF)
LDW280-52041-1 (REF)
3/4
PRESSURE
SEE NOTE 1
SEE NOTE 3
+X253.500 (REF)
1 5/16
LDW280-10255 (REF)
LDW280-52041-3 (REF)
SEE NOTE 1
PRESSURE
3/8
1 11/32
(J6)
LDW280M10001-3(REF)
+X294.648 (REF)
GR10HAD5-7(2)
GS570J-3D(2)NS
(ON-3)
GR10HAD5-6
GS570J-3D NS
(ON-3)
LDW280-52041-1 (REF)
SEE NOTE 1
PRESSURE
5/8
SEE NOTE 3
1 1/4
1 27/32
-Z 22.000 (REF)
-Z 27.000 (REF)
SEE NOTE 3
3/32
LDW280-52041-1 (REF)
LDW280-10134-13 (REF)
LDW280-10132-11 (REF)
LDW280M10232-1 (REF)
LDW280-10132-13 (REF)
LDW280-10133-15 (RE
-Y17.250 (REF)
2 1/4
2 1/16
1 9/16
1
15/16
7/8
13/16
5/8
5/16
3 3/16
LDW280M10003 (REF)
LDW280-28013 (R
LDW280-10259 (REF)

CODE IDENT NO. 26512
LDW280-52020
SH 5

3/3

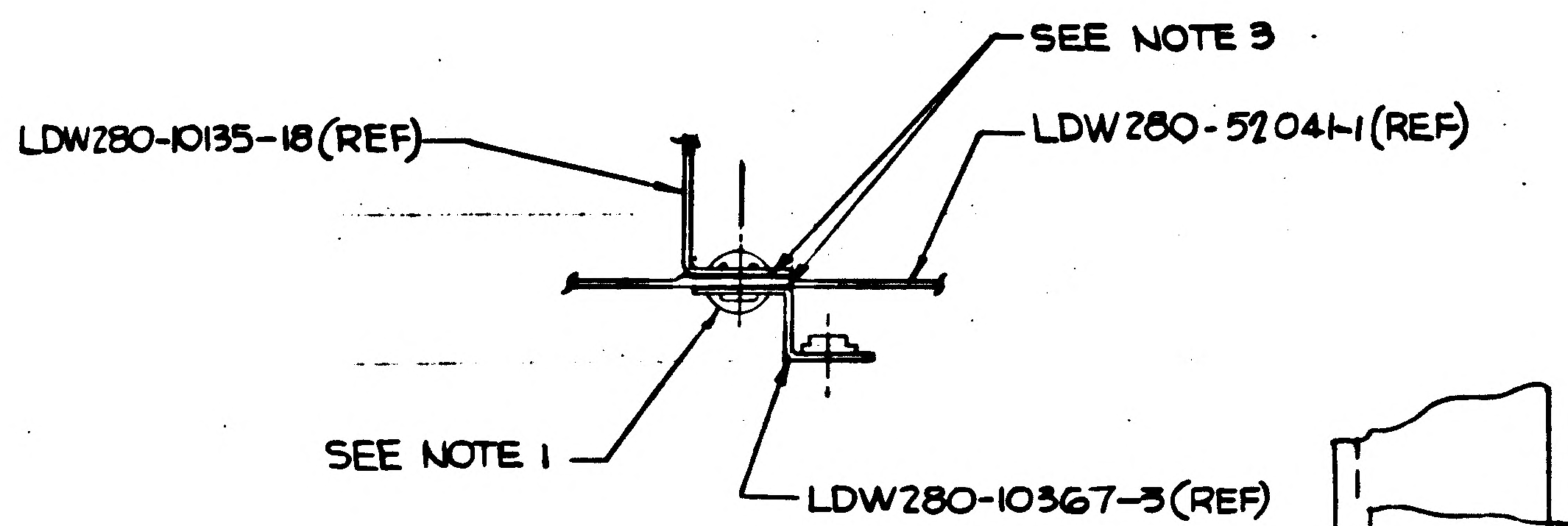
SEE NOTE 3
LDW280-10135-18(REF)
LDW280-52041-1(REF)
SEE NOTE 1
LDW280-10367-3(REF)

SECT BR-BR (TYP)
VIEW LOOKING DOWN
(ZONE 19A SH4)
(SCALE FULL)

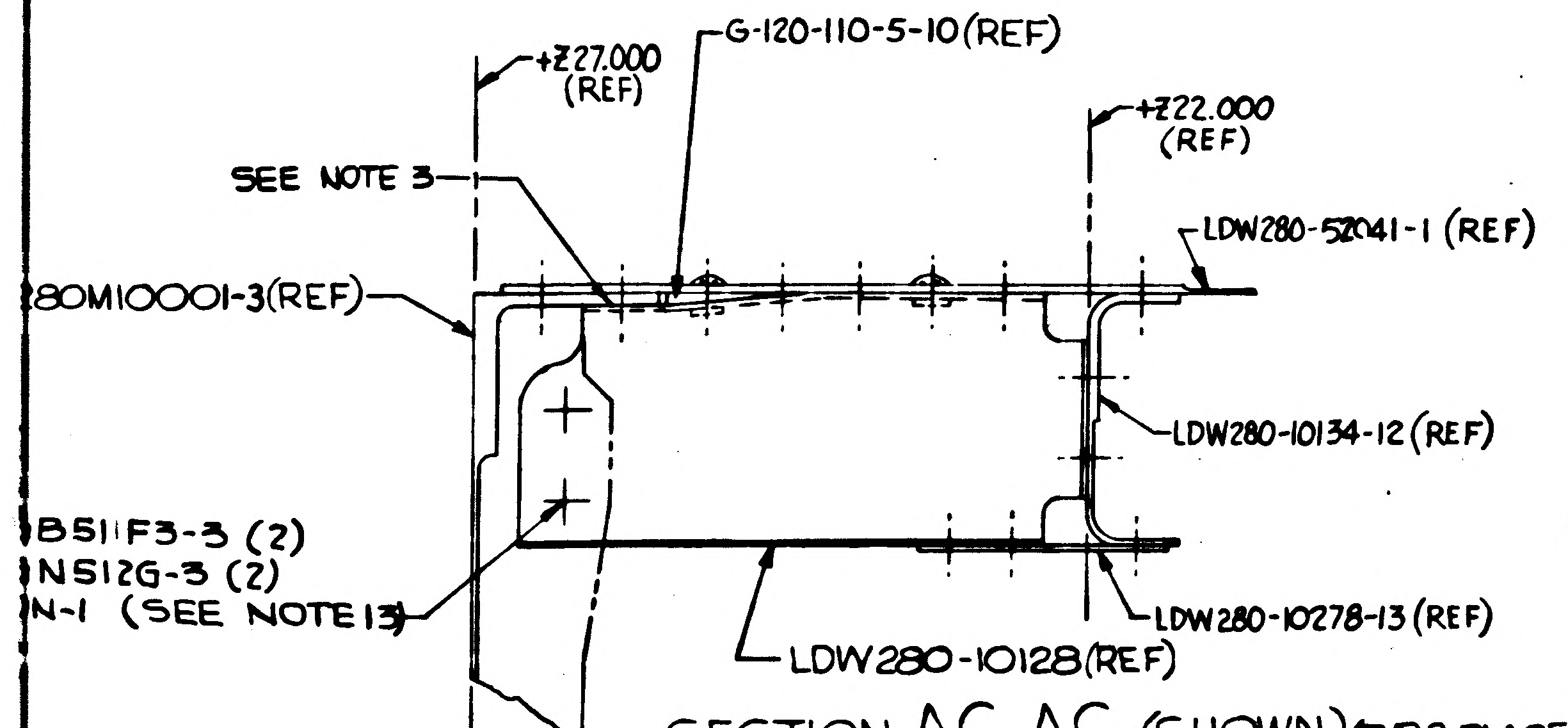
+Z27.000 (REF)
G-120-110-5-10(REF)
+Z22.000 (REF)
SEE NOTE 3
LDW280-52041-1 (REF)
280M10001-3(REF)
LDW280-10134-12 (REF)
B511F3-3 (2)
N512G-3 (2)
N-1 (SEE NOTE 13)
LDW280-10278-13 (REF)
LDW280-10128(REF)

SECTION AC-AC (SHOWN) (TYP 3 PLACES)
VIEW LOOKING DOWN (ZONE 11C SH3) (B1)
SECTION AH-AH (OPP) (TYP 3 PLACES)
(ZONE 22C SH4)
(SCALE FULL)

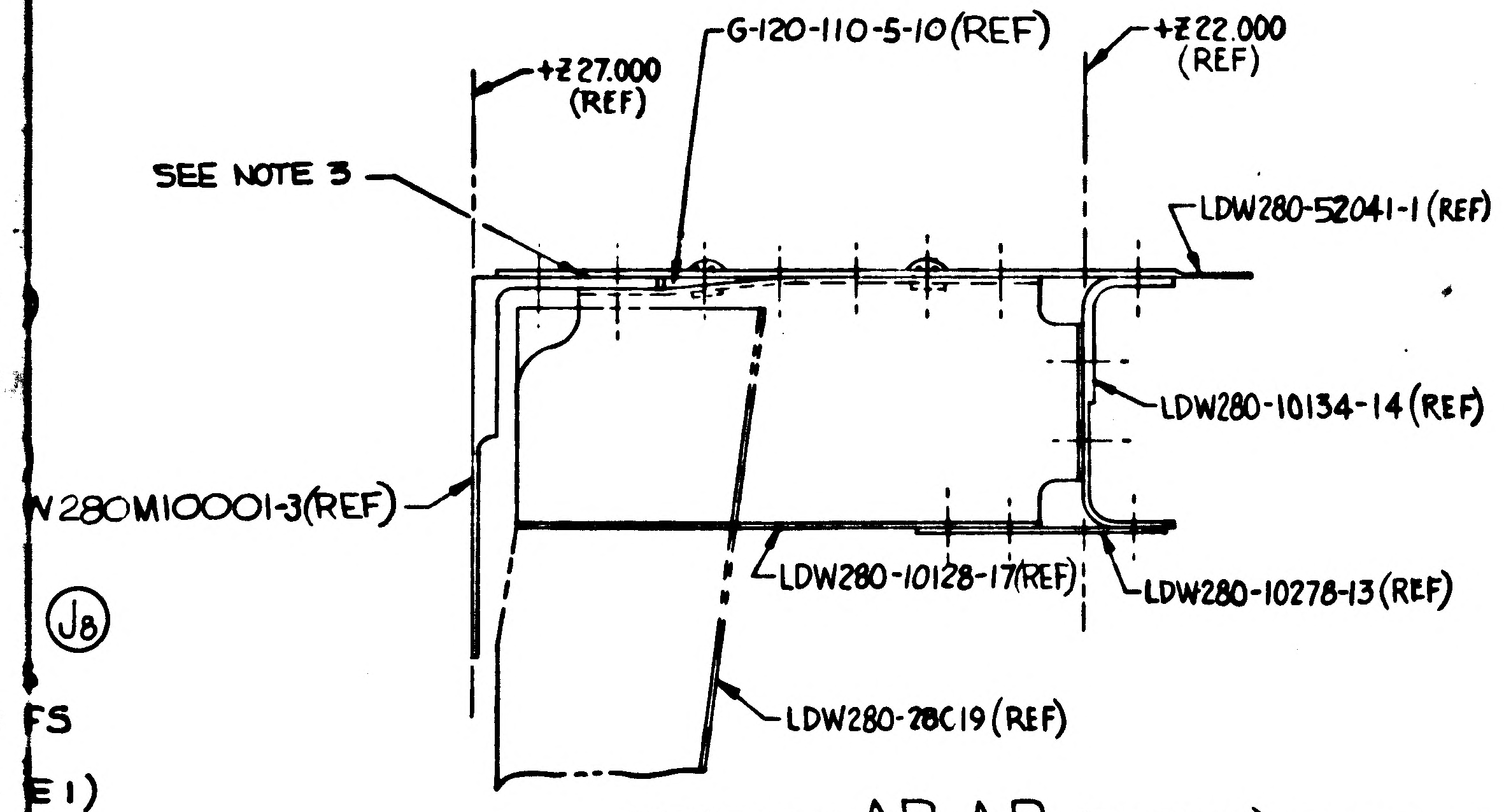
G-120-110-5-10(REF)
+Z27.000 (REF)
+Z22.000 (REF)
SEE NOTE 3
LDW280-52041-1 (REF)
LDW280-10134-14 (REF)
W280M10001-3(REF)
LDW280-10128-17(REF)
LDW280-10278-13 (REF)
LDW280-28C19 (REF)
(J8)
FS
E1)

SECTION AB-AB (SHOWN) (TYP 2 PLACES)
VIEW LOOKING DOWN (ZONE 10 B SH 3) (B1)
SECTION AG-AG (OPP) (TYP 2 PLACES)
(ZONE 22 C SH4)
(SCALE FULL)

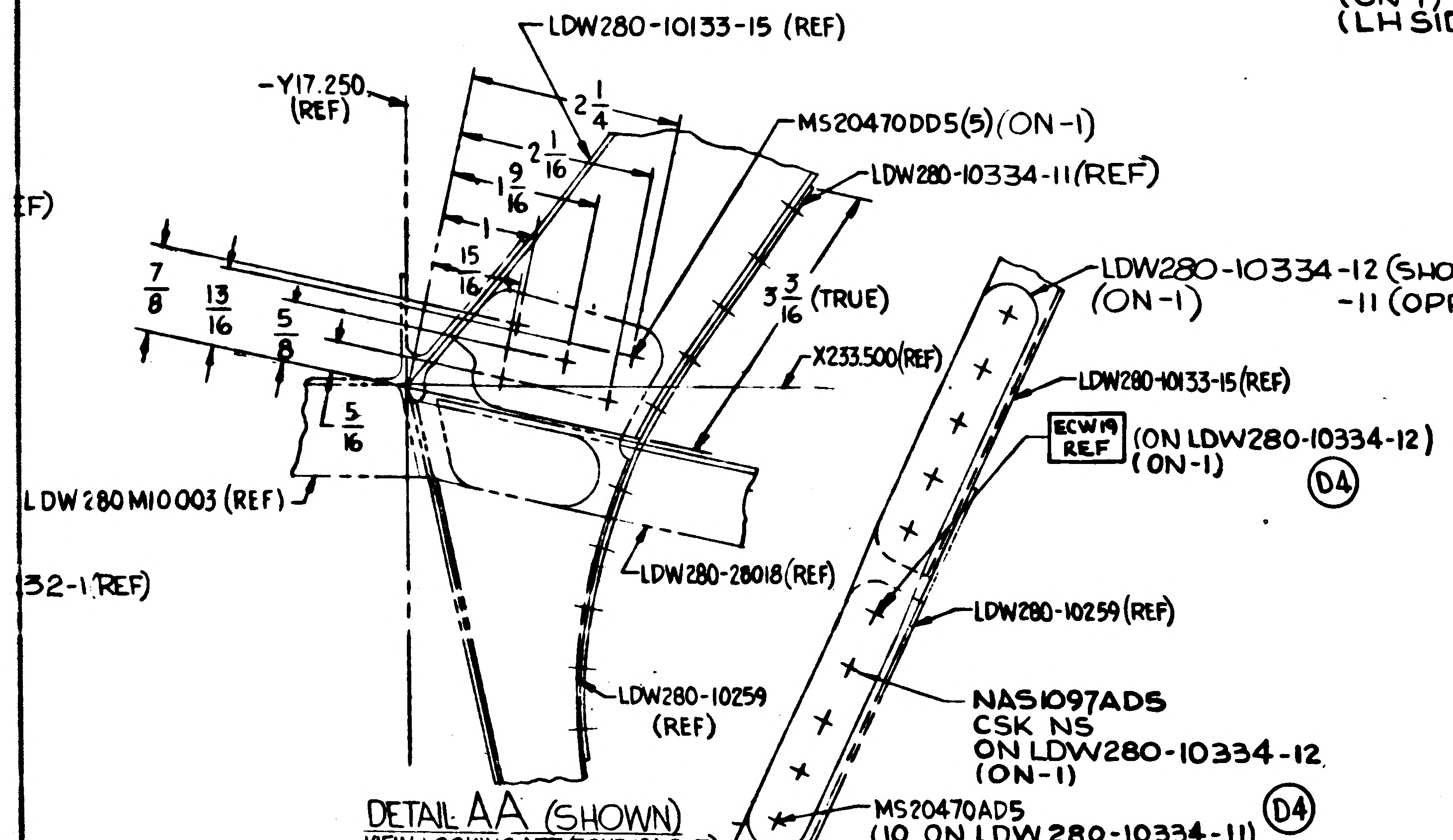
-Y17.250 (REF)
LDW280-10133-15 (REF)
2 1/4
2 1/16
1 9/16
MS20470DD5(5)(ON-1)
LDW280-10334-11(REF)
1
15
F)
7/8
13/16
5/8
5/16
3 3/4 (TRUE)
X233.500(REF)
LDW280-10334-12 (SHOWN) (ON-1)
-11 (OPP)
LDW280-10133-15(REF)
ECW19 REF (ON LDW280-10334-12) (ON-1) (D4)
LDW280M10003 (REF)
32-1 REF)
LDW280-28018(REF)
LDW280-10259(REF)
LDW280-10259 (REF)
NAS1097AD5
CSK NS
ON LDW280-10334-12
(ON-1)
MS20470AD5
(10 ON LDW280-10334-11)
(8 ON LDW280-10334-12) (D4)

DETAIL AA (SHOWN)
VIEW LOOKING AFT (ZONE 12A SH3)
DETAIL AF (OPP)
(ZONE 27A SH4)
(SCALE FULL)

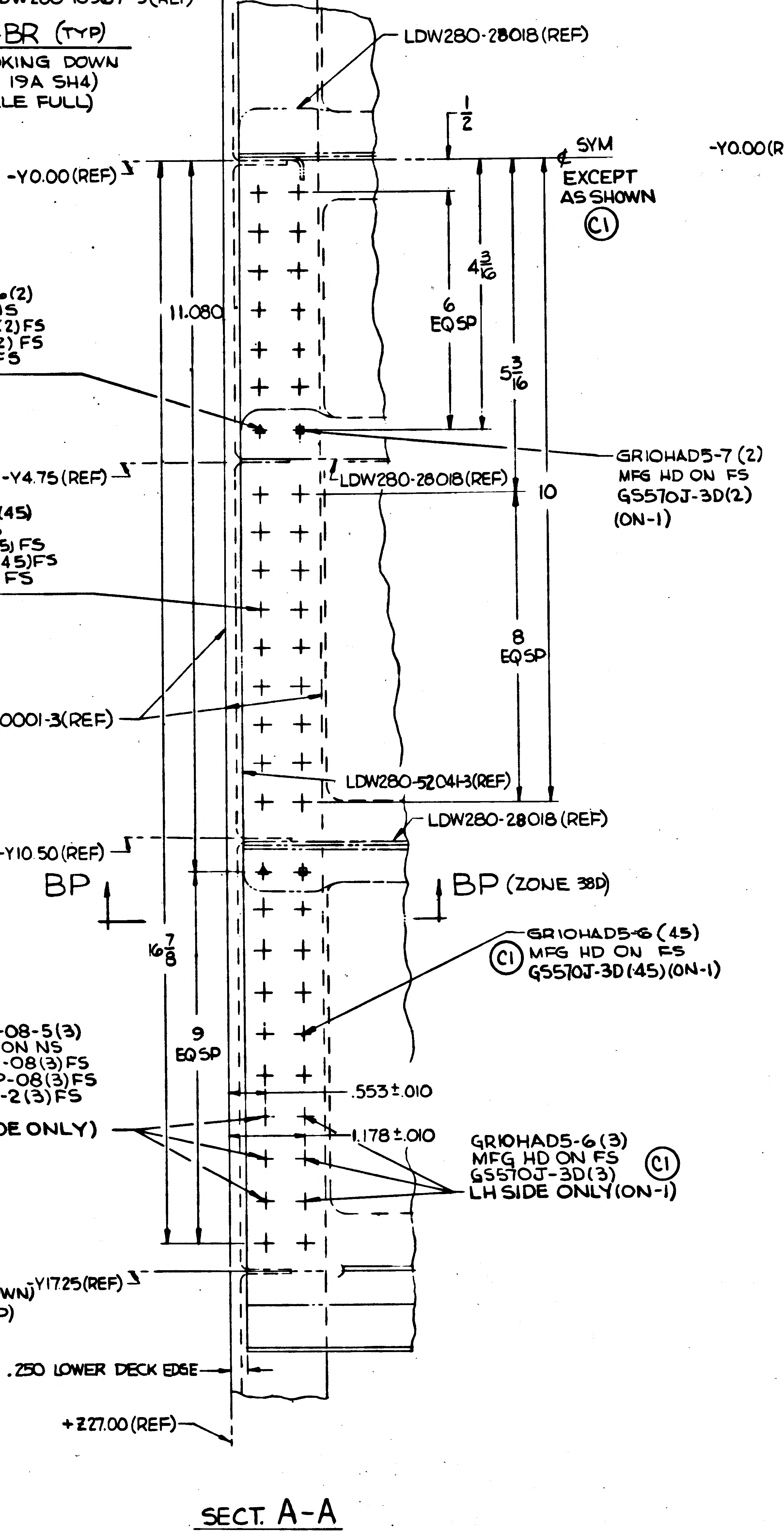
LDW280-28018 (REF)
1/2
SYM
EXCEPT AS SHOWN (C1)
-Y0.00 (REF)
11.080
4 3/16
6 EQ SP
5 3/16
(J8) GB511D-08-6(2)
MFG HD ON NS
GN512H-08(2)FS
GS570P-08(2) FS
GW10G-2(2) FS
(ON-1)
GR10HAD5-7 (2)
MFG HD ON FS
GS570J-3D(2)
(ON-1)
-Y4.75 (REF)
LDW280-28018(REF)
10
(C1) GB511D-08-5(45)
MFG HD ON NS
(J8) GN512H-08(45)FS
GS570P-08(45)FS
GW10G-2(45) FS
(ON-1)
8 EQ SP
(J6) LDW280M10001-3(REF)
LDW280-52041-3(REF)
LDW280-28018 (REF)
-Y10.50 (REF)
BP
BP (ZONE 38D)
16 7/8
GR10HAD5-6 (45)
(C1) MFG HD ON FS
GS570J-3D (45) (ON-1)
(C1) GB511D-08-5(3)
(J8) MFG HD ON NS
GN512H-08(3)FS
GS570P-08(3)FS
GW10G-2(3)FS
(ON-1)
(LH SIDE ONLY)
9 EQ SP
.553±.010
1.178±.010
GR10HAD5-6(3)
MFG HD ON FS
GS570J-3D(3)
LH SIDE ONLY(ON-1) (C1)
Y17.25(REF)
.250 LOWER DECK EDGE
+Z27.00 (REF)

SECT. A-A
VIEW LOOKING DOWN
(ZONE 11A SH3)
(SCALE FULL)

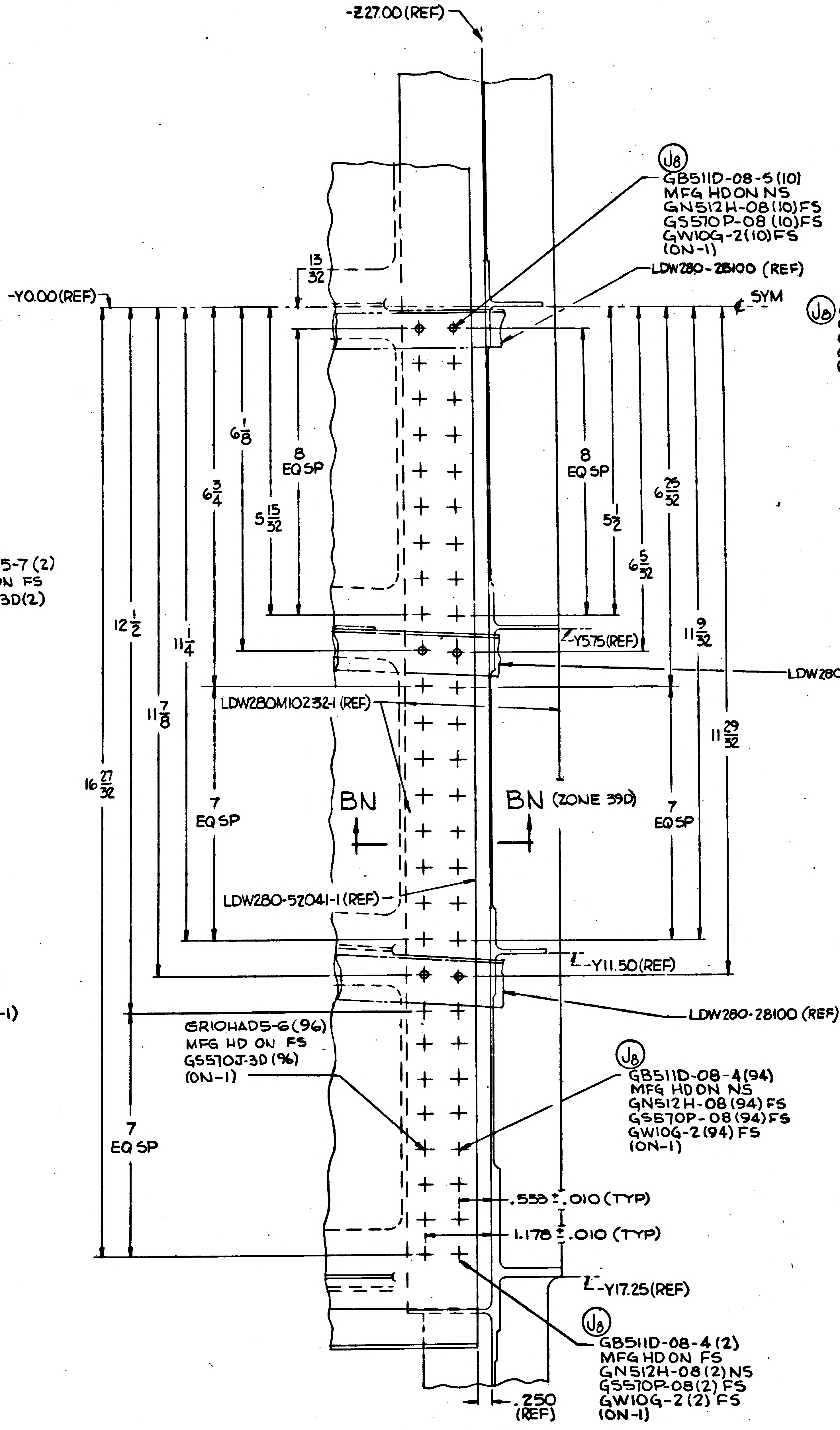
-Z27.00 (REF)
(J8) GB511D-08-5(10)
MFG HD ON NS
GN512H-08(10)FS
GS570P-08 (10)FS
GW10G-2(10)FS
(ON-1)
LDW280-28100 (REF)
13/32
-Y0.00(REF)
SYM
6 1/8
8 EQ SP
6 3/4
5 15/32
8 EQ SP
5 1/2
6 29/32
6 5/32
12 1/2
11 1/4
Y5.75 (REF)
11 9/32
LDW280-28100 (REF)
LDW280M10232-1 (REF)
11 7/8
11 29/32
16 27/32
7 EQ SP
BN
BN (ZONE 39D)
7 EQ SP
LDW280-52041-1 (REF)
Y11.50 (REF)
LDW280-28100 (REF)
GR10HAD5-6 (96)
MFG HD ON FS
GS570J-3D (96)
(ON-1)
(J8) GB511D-08-4(94)
MFG HD ON NS
GN512H-08 (94) FS
GS570P-08 (94) FS
GW10G-2 (94) FS
(ON-1)
7 EQ SP
.553±.010 (TYP)
1.178±.010 (TYP)
Y17.25(REF)
(J8) GB511D-08-4 (2)
MFG HD ON FS
GN512H-08(2)NS
GS570P-08(2) FS
GW10G-2(2) FS
(ON-1)
.250 (REF)

SECT. B-B
VIEW LOOKING DOWN
(ZONE 8A SH3)
(SCALE FULL)

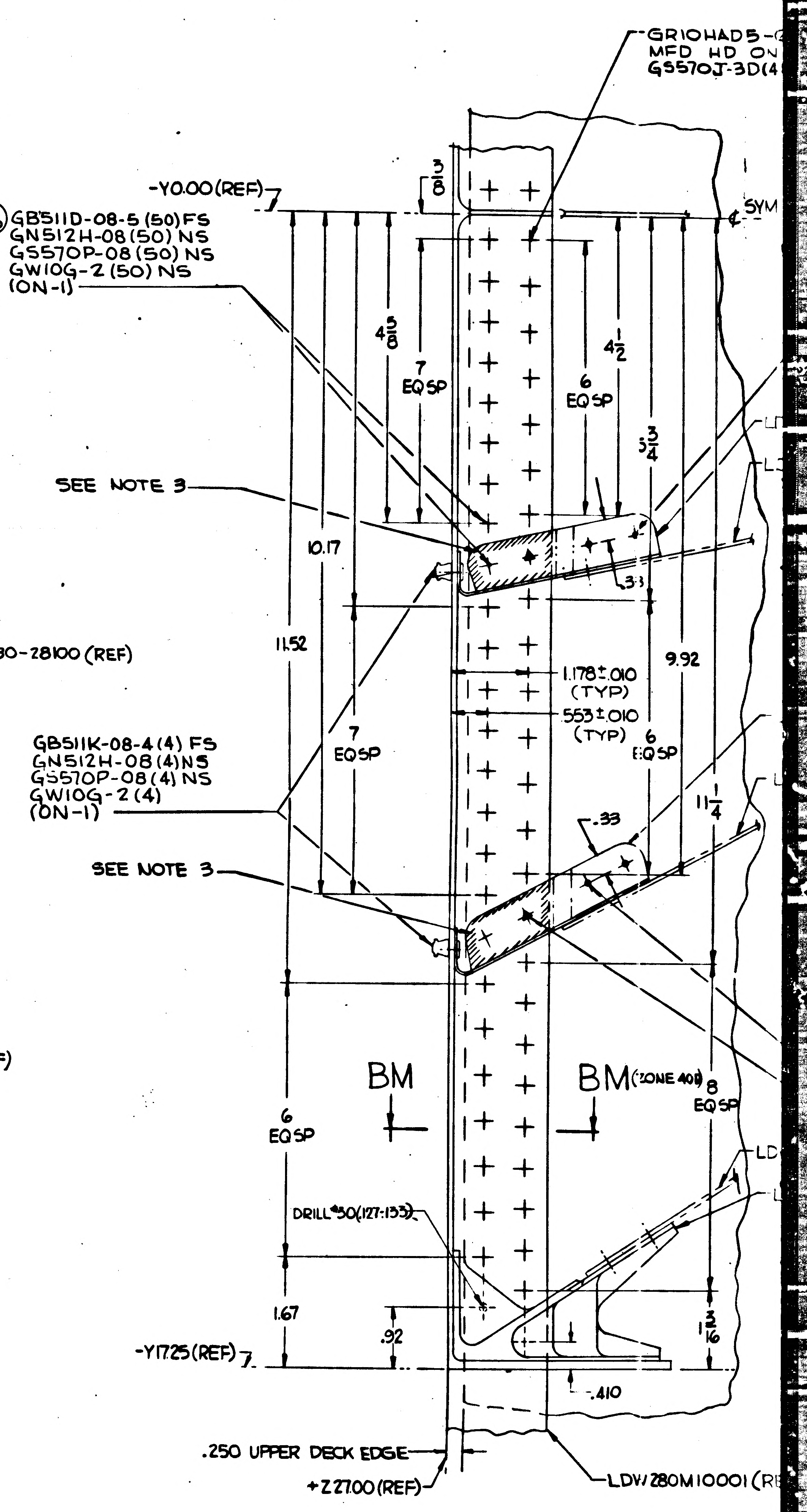
GR10HAD5-
MFD HD ON
GS570J-3D(4
-Y0.00(REF)
3/8
SYM
(J8) GB511D-08-5 (50) FS
GN512H-08(50) NS
GS570P-08 (50) NS
GW10G-2 (50) NS
(ON-1)
4 3/8
7 EQ SP
4 1/2
6 EQ SP
3 3/4
SEE NOTE 3
10.17
.33
11.52
1.178±.010 (TYP)
.553±.010 (TYP)
9.92
6 EQ SP
GB511K-08-4 (4) FS
GN512H-08 (4) NS
GS570P-08 (4) NS
GW10G-2 (4)
(ON-1)
7 EQ SP
11 1/4
.33
SEE NOTE 3
BM
BM (ZONE 40B)
8 EQ SP
6 EQ SP
DRILL #30 (127-.135)
1.67
.92
1 3/16
-Y17.25 (REF)
.410
.250 UPPER DECK EDGE
+Z27.00 (REF)
LDW280M10001 (RE

VIEW C-C
VIEW LOOKING DOWN
(ZONE 11D SH3)
(SCALE FULL)

02/03 NAS 9-1100

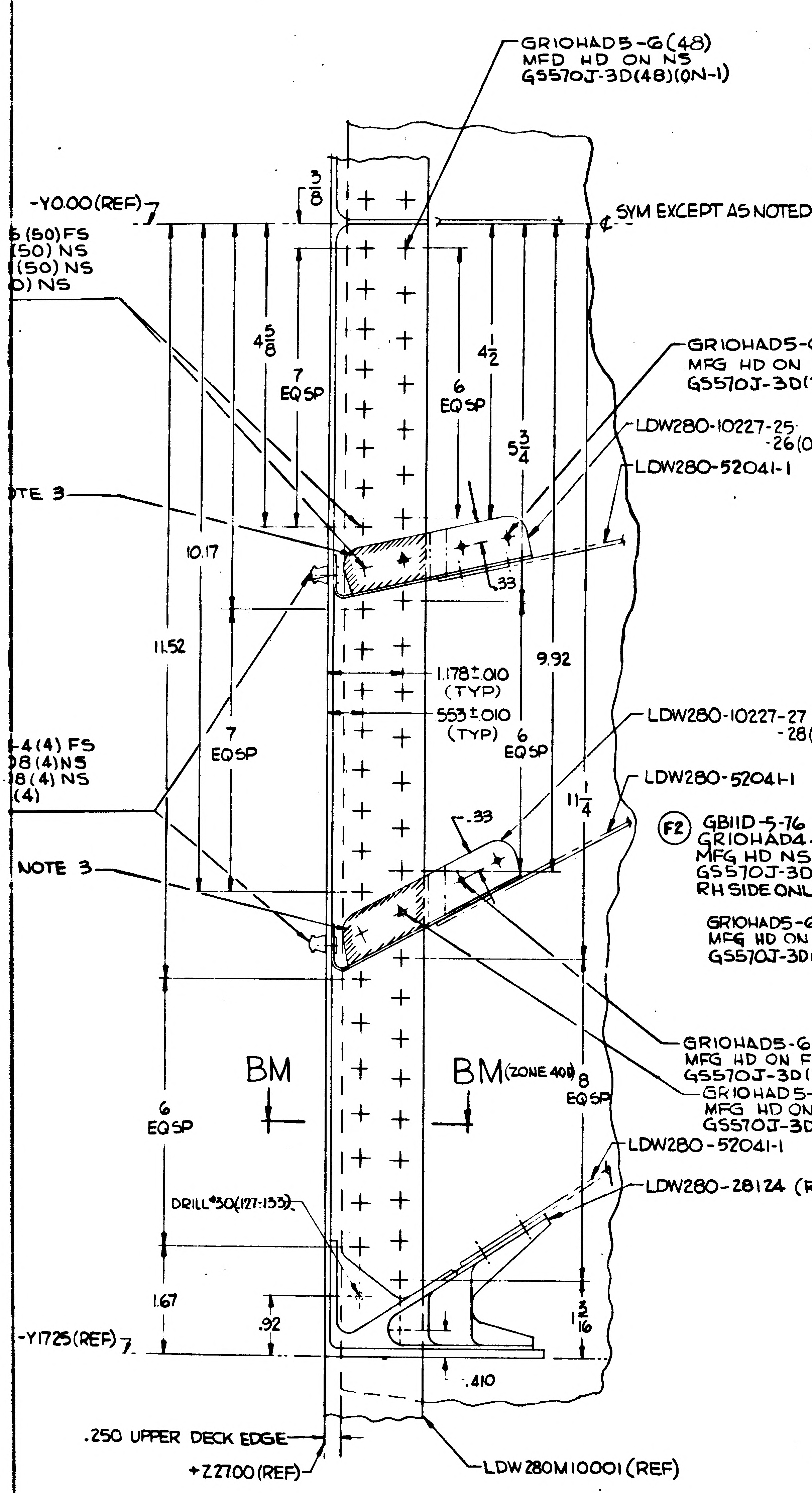
GR1OHAD5-G(48)
MFD HD ON NS
GS570J-3D(48)(ON-1)
-Y0.00(REF)
1 3/8
SYM EXCEPT AS NOTED
6 (50) FS
(50) NS
(50) NS
) NS
4 5/8
7 EQ SP
6 EQ SP
4 1/2
5 3/4
GR1OHAD5-6 (2)
MFG HD ON FS
GS570J-3D(2)(ON-1)
LDW280-10227-25
-26 (ON OPP SIDE ¢ SYM)
LDW280-52041-1
NOTE 3
10.17
.33
11.52
9.92
1.178±.010 (TYP)
.553±.010 (TYP)
7 EQ SP
6 EQ SP
LDW280-10227-27
-28 (ON OPP SIDE ¢ SYM)
-4 (4) FS
08 (4) NS
18 (4) NS
(4)
LDW280-52041-1
.33
11 1/4
NOTE 3
GR1OHAD5-6 (2)
MFG HD ON FS
GS570J-3D(2)(ON-1)
GR1OHAD5-7 (2)
MFG HD ON NS
GS570J-3D(2)(ON-1)
BM
BM (ZONE 40D)
6 EQ SP
8 EQ SP
LDW280-52041-1
LDW280-28124 (REF)
DRILL #30(.127/.133)
1.67
.92
1 3/16
-Y17.25(REF)
.410
.250 UPPER DECK EDGE
+Z27.00(REF)
LDW280M10001 (REF)

VIEW C-C
VIEW LOOKING DOWN
(ZONE 11D SH3)
(SCALE FULL)

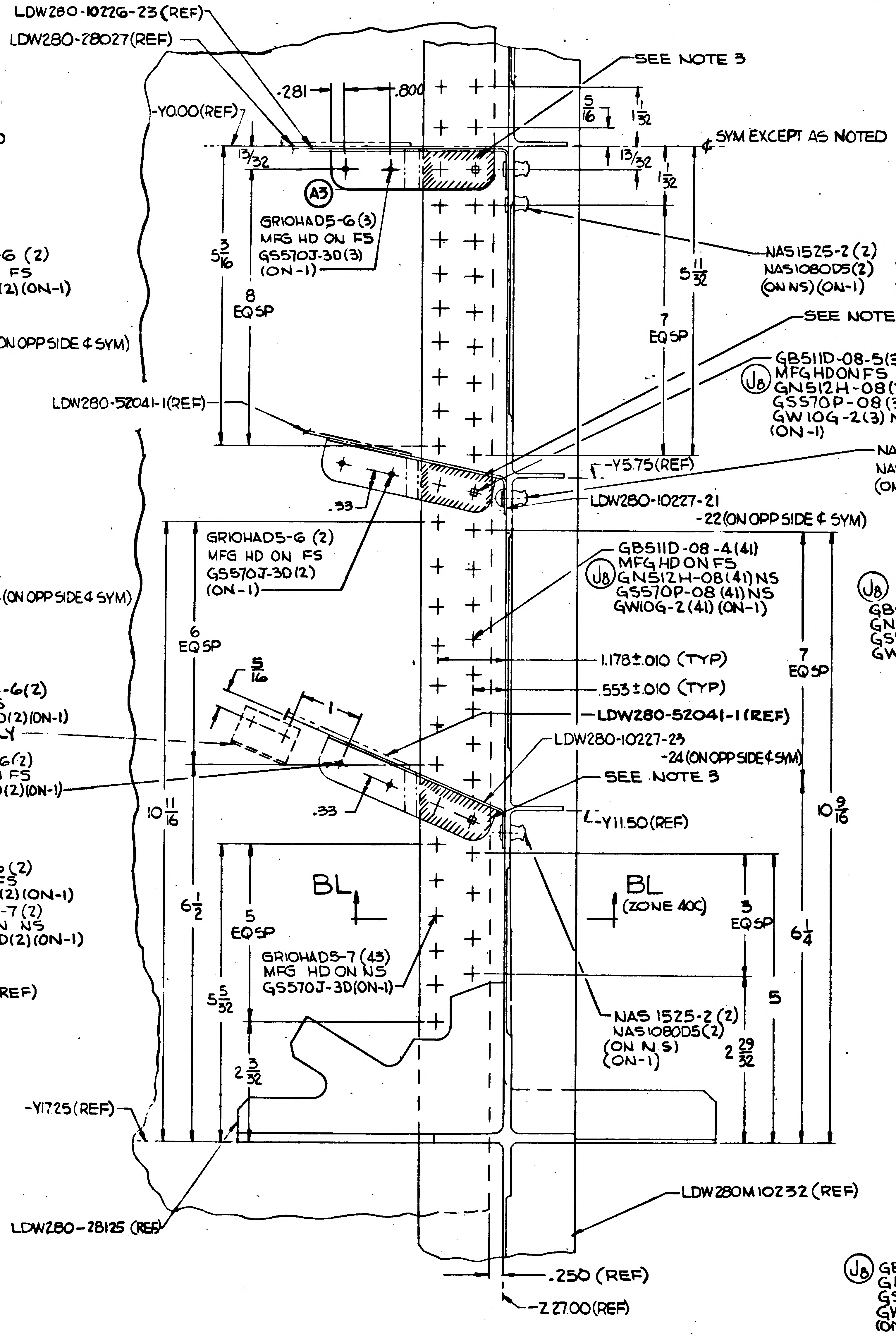
LDW280-10226-23 (REF)
LDW280-28027(REF)
SEE NOTE 3
-Y0.00(REF)
.281
.800
5/16
1 1/32
SYM EXCEPT AS NOTED
13/32
13/32
1/32
A3
GR1OHAD5-G(3)
MFG HD ON FS
GS570J-3D(3)
(ON-1)
5 3/16
8 EQ SP
5 11/32
7 EQ SP
NAS1525-2 (2)
NAS1080D5(2)
(ON NS) (ON-1)
GR1OHAD5-6 (2)
GS510J-3D. (2)(ON-3)
SEE NOTE 3
J8
GB511D-08-5(3)
MFG HD ON FS
GN512H-08(3) NS
GS570P-08 (3) NS
GW10G-2(3) NS
(ON-1)
LDW280-52041-1(REF)
NAS 1525-2 (2)
NAS 1080D5(2) (NS)
(ON-1)
-Y5.75(REF)
.33
LDW280-10227-21
-22 (ON OPP SIDE ¢ SYM)
GR1OHAD5-6 (2)
MFG HD ON FS
GS570J-3D(2)
(ON-1)
J8
GB511D-08-4(41)
MFG HD ON FS
GN512H-08(41) NS
GS570P-08 (41) NS
GW10G-2(41) (ON-1)
6 EQ SP
1.178±.010 (TYP)
.553±.010 (TYP)
7 EQ SP
5/16
F2
GB11D-5-76
GR1OHAD4-6(2)
MFG HD NS
GS570J-3D(2)(ON-1)
RH SIDE ONLY
GR1OHAD5-6(2)
MFG HD ON FS
GS570J-3D(2)(ON-1)
LDW280-52041-1 (REF)
LDW280-10227-23
-24 (ON OPP SIDE ¢ SYM)
SEE NOTE 3
10 11/16
.33
-Y11.50(REF)
10 9/16
BL
BL (ZONE 40C)
6 1/2
5 EQ SP
3 EQ SP
6 1/4
GR1OHAD5-7 (43)
MFG HD ON NS
GS570J-3D(ON-1)
5
5 5/32
NAS 1525-2 (2)
NAS1080D5(2)
(ON N S)
(ON-1)
2 29/32
2 3/32
-Y17.25(REF)
LDW280M10232 (REF)
LDW280-28125 (REF)
.250 (REF)
-Z 27.00(REF)

VIEW D-D
VIEW LOOKING DOWN
(ZONE 8D SH 3)
(SCALE FULL)

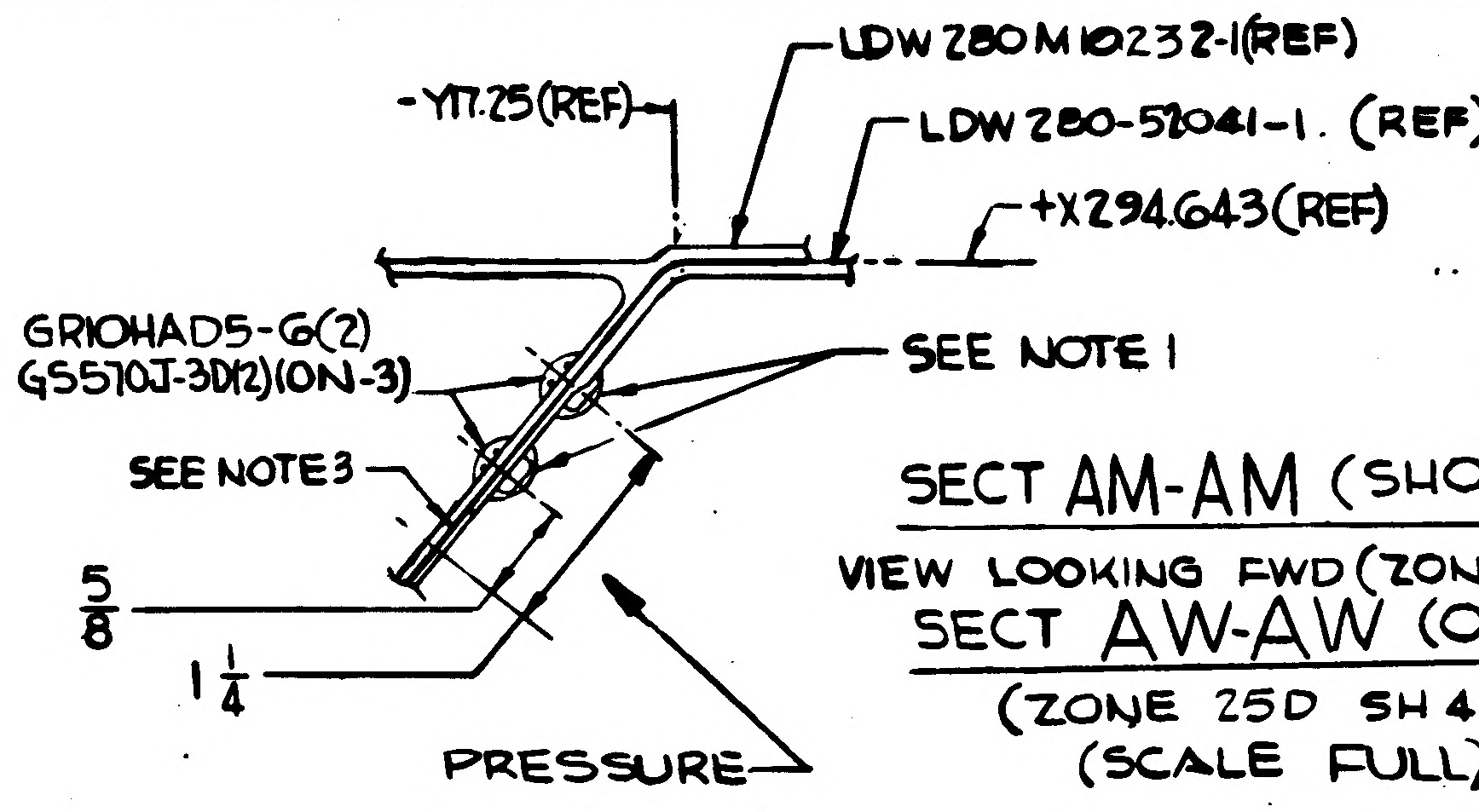
LDW280M10232-1(REF)
-Y17.25(REF)
LDW280-52041-1. (REF)
+X294.643(REF)
GR1OHAD5-G(2)
GS570J-3D(2)(ON-3)
SEE NOTE 1
SEE NOTE 3
5/8
1 1/4
PRESSURE

SECT AM-AM (SHOWN)
VIEW LOOKING FWD (ZONE 8D SH 3)
SECT AW-AW (OPP)
(ZONE 25D SH 4)
(SCALE FULL)

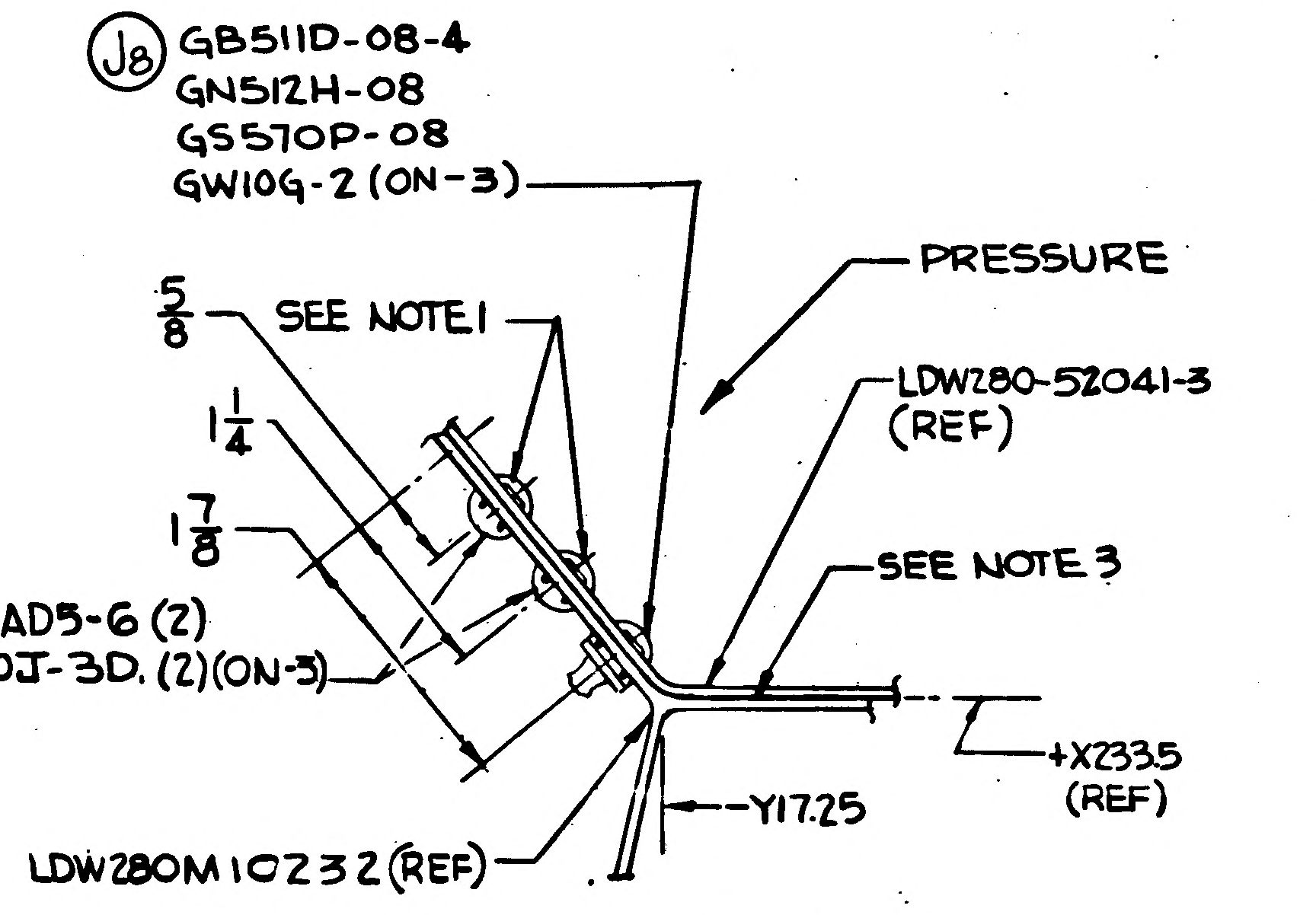
J8
GB511D-08-4
GN512H-08
GS570P-08
GW10G-2 (ON-3)
PRESSURE
5/8
SEE NOTE 1
LDW280-52041-3
(REF)
1 1/4
1 7/8
SEE NOTE 3
+X233.5
(REF)
-Y17.25
LDW280M10232 (REF)

SECT AL-AL (SHOWN)
VIEW LOOKING FWD (ZONE 8A SH3)
SECT AV-AV (OPP)
(ZONE 25D SH 4)
(SCALE FULL)

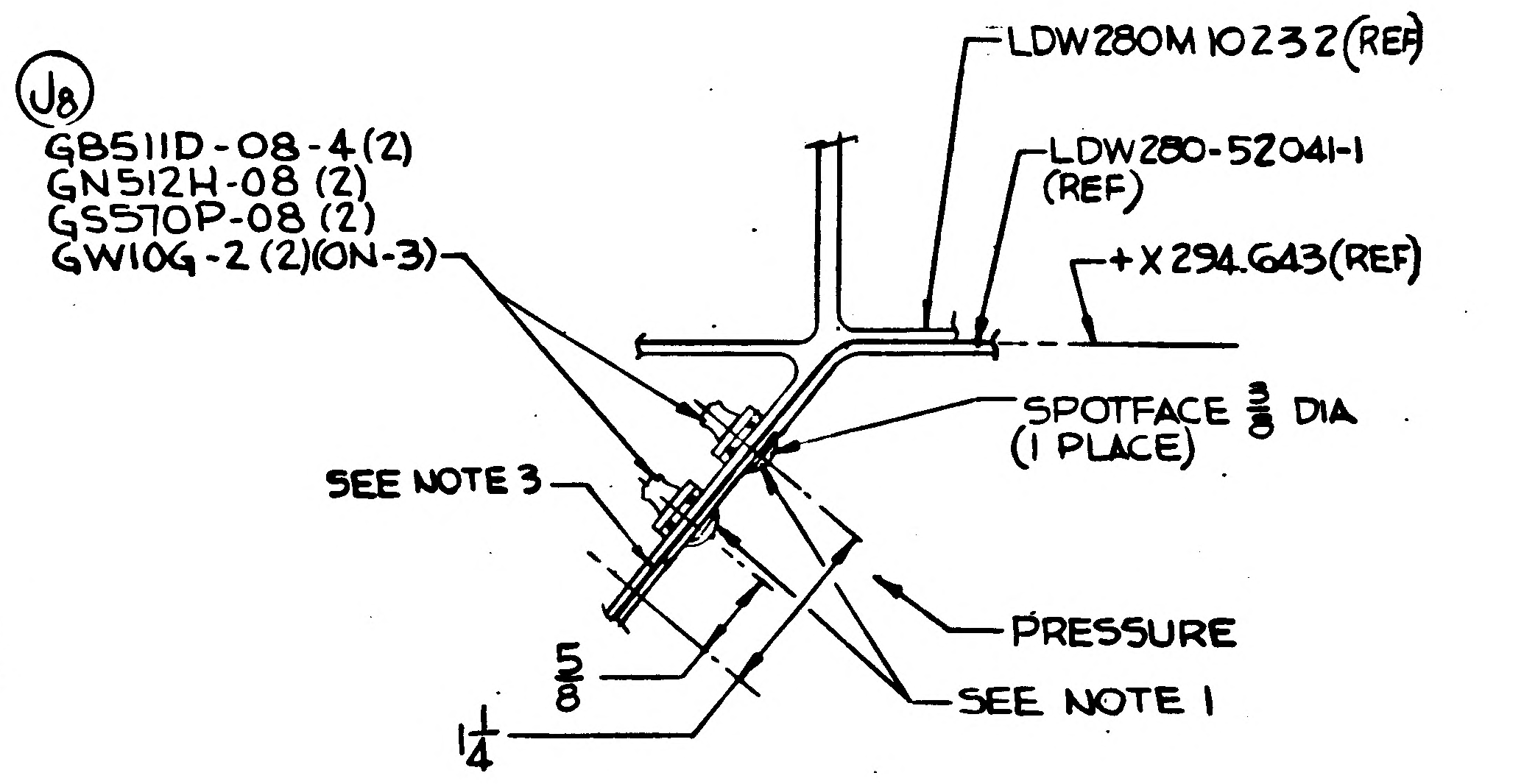
LDW280M10232 (REF)
J8
GB511D-08-4(2)
GN512H-08 (2)
GS570P-08 (2)
GW10G-2 (2)(ON-3)
LDW280-52041-1
(REF)
+X294.643(REF)
SPOTFACE 3/8 DIA
(1 PLACE)
SEE NOTE 3
PRESSURE
5/8
SEE NOTE 1
1 1/4

SECT AK-AK (SHOWN)
VIEW LOOKING FWD (ZONE 8D SH 3)
SECT AU-AU (OPP)
(ZONE 25A SH 4)
(SCALE FULL)

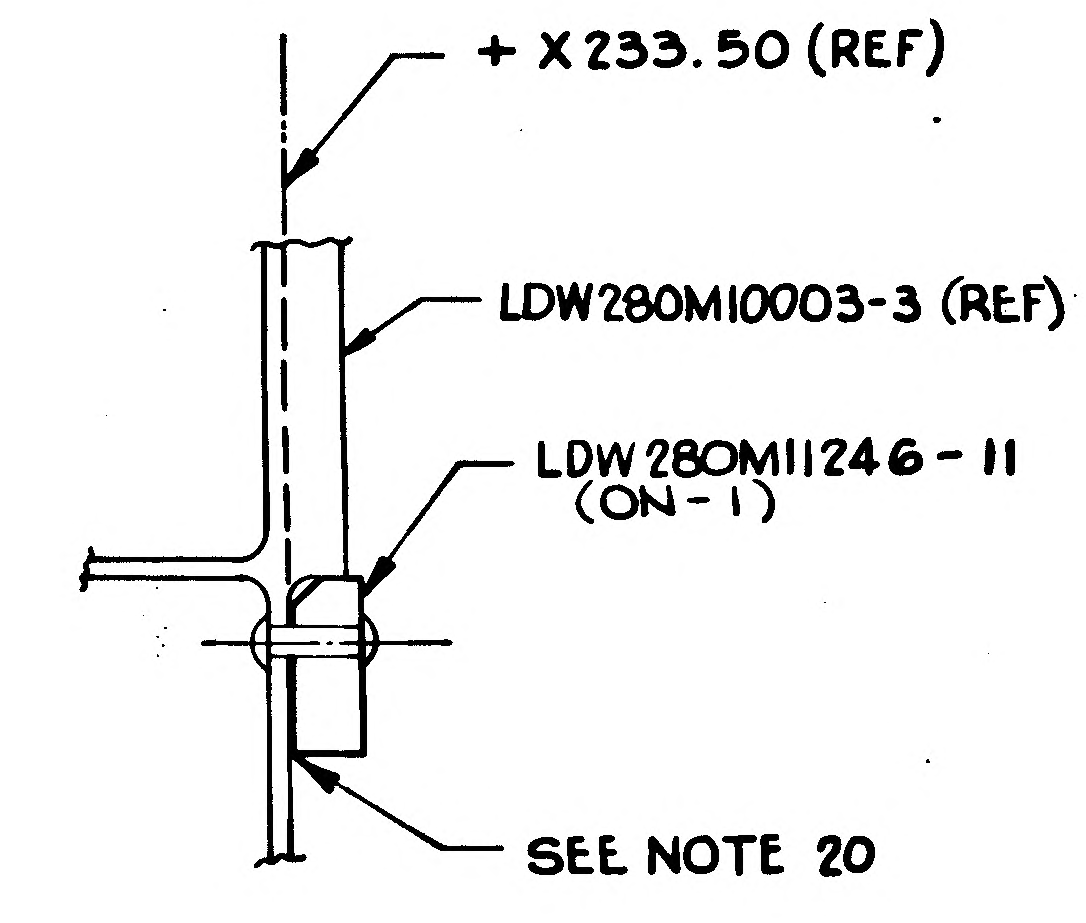
+X233.50 (REF)
LDW280M10003-3 (REF)
LDW280M11246 - 11
(ON-1)
SEE NOTE 20

SECTION CP-CP
(ZONE 29A) (J2)

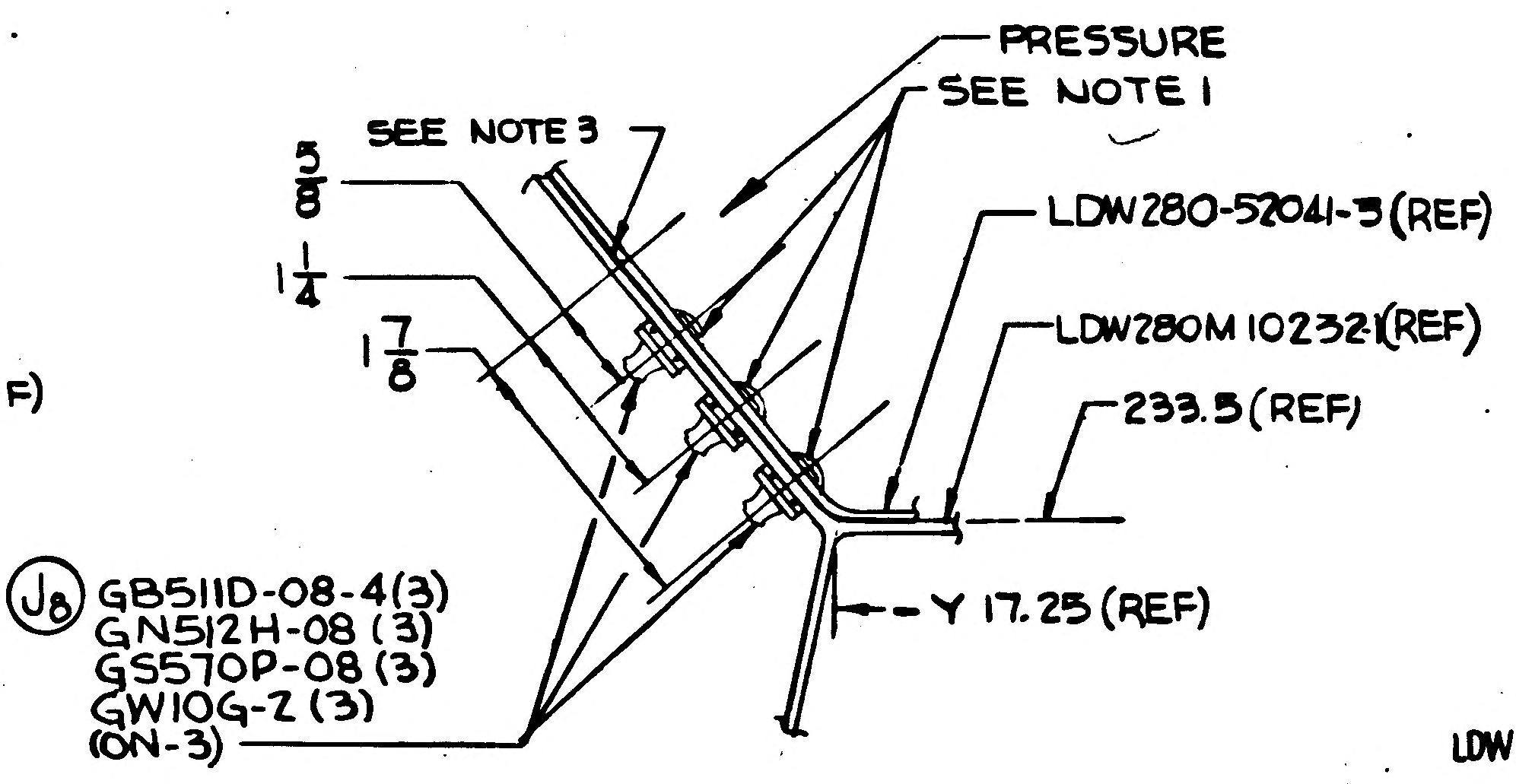
PRESSURE
SEE NOTE 1
SEE NOTE 3
5/8
1 1/4
LDW280-52041-3(REF)
1 7/8
LDW280M10232(REF)
233.5(REF)
J8
GB511D-08-4(3)
GN512H-08 (3)
GS570P-08 (3)
GW10G-2 (3)
(ON-3)
-Y 17.25 (REF)

SECT AJ-AJ (SHOWN)
VIEW LOOKING FWD (ZONE 8A SH 3)
SECT AT-AT (OPP)
(ZONE 25A SHT 4)
(SCALE FULL)

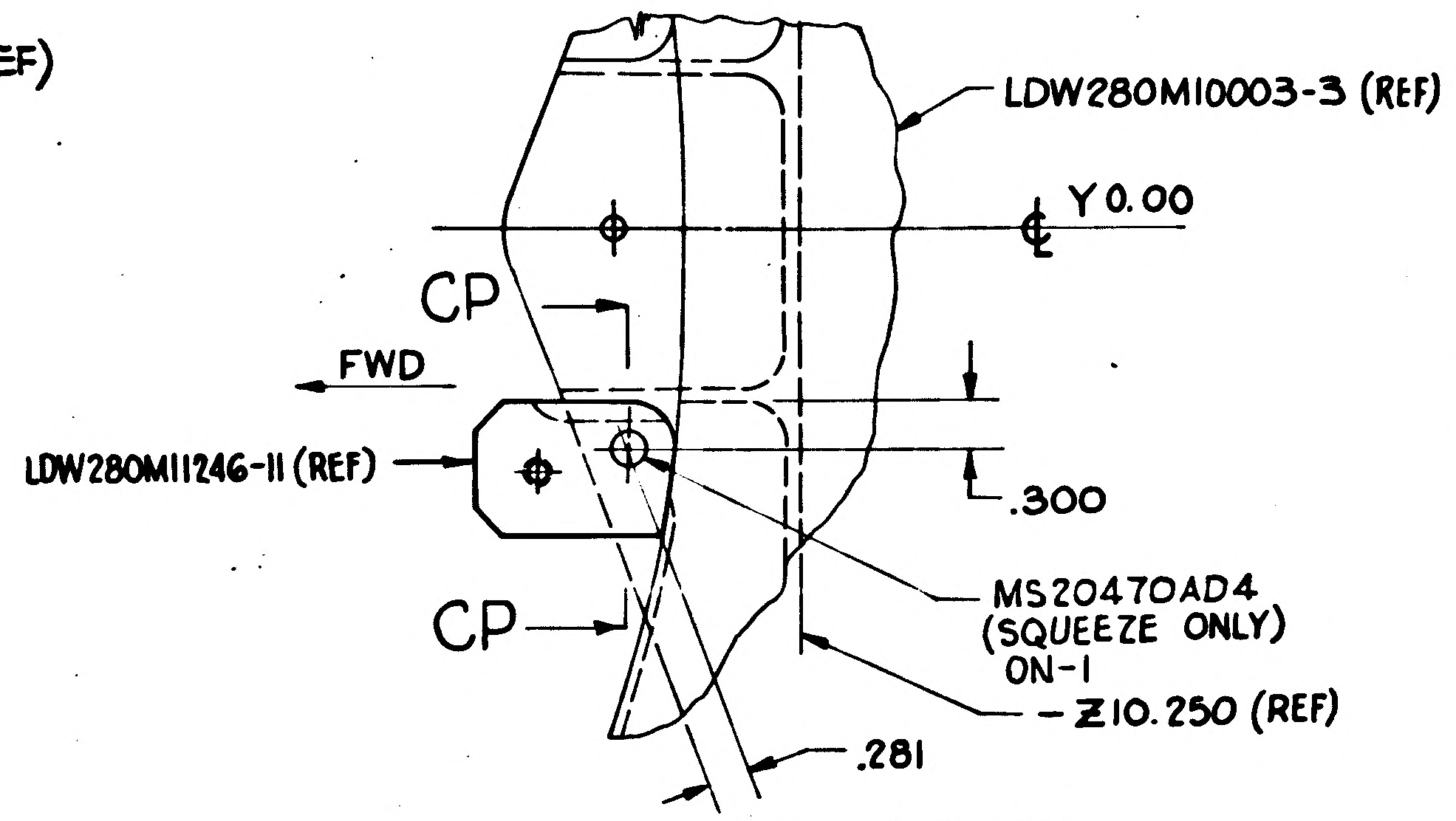
LDW280M10003-3 (REF)
Y0.00
CP
FWD
LDW280M11246-11 (REF)
.300
CP
MS20470AD4
(SQUEEZE ONLY)
ON-1
-Z10.250 (REF)
.281

SECTION CN-CN
(ZONE 19A SH 4) (J2)
(SCALE FULL)

MANUFACTURING OPERATIONS
UNLESS OTHERWISE SPECIFIED
NOTES CHECKED √ APPLY TO THIS DWG.

PART NUMBER
AND ALL OTHER MARKINGS
IN REGION MARKED ⊠
USE BOTH SIDES IF NECESSARY.

FILLET AND INSIDE CORNER
RADII TOLERANCES
.016R TO .062R ± .010
.063R TO .250R ± .015
OVER .250R ± .030

DEPTH SHOWN FOR TAPPED HOLES IS FULL THDS. 2-3 IMP THDS. BEYOND PERMISSIBLE.

EXTERNAL THREAD LENGTH SHOWN INCLUDES 2 IMPERFECT THREADS MAX.

DO NOT CADMIUM PLATE & PAINT HOLES OR SURFACES MARKED WITH DOUBLE ASTERISK.

MISMATCH STEP OF ± .005 PERMISSIBLE DUE TO CHANGE OF CUTTERS AT INSIDE INTERSECTING SURFACES.

DIAMETERS MARKED
MUST BE CONCENTRIC WITHIN
FULL INDICATOR
READING

HOLES MUST BE KEPT FREE OF CHROME PLATING SOLUTION.

ALL DIMENSIONS SHOWN TO BE MET AFTER CADMIUM PLATING. THICKNESS OF PLATE .0003 MIN. TO .0005 MAX. MIN. THICKNESS TO BE .0002 ON THREADED AREAS. NO ALLOWANCE FOR PLATING IN HOLES

125 SURFACE ROUGHNESS INCLUDING REAMED HOLES PER MIL-STD-10

200 FOR ALL DRILLED HOLES

REMOVE ALL BURRS.
BREAK ALL EDGES .015-.031

INSPECTION INFORMATION
MINIMUM PERMISSIBLE
AVERAGE EDGE DISTANCE
MARKED IS

SYMBOL √ DENOTES SURFACE TO BE MACHINED

UNLESS OTHERWISE SPECIFIED TOLERANCE ON FLANGES IS ± 1/32

LENGTHS OF AN, NAS & MS AL ALY RIVETS SHORTER THAN 1 INCH ARE NOT SPECIFIED.

TOLERANCE ON LOFTED DELINEATIONS IS

DWG SIZE 34 X 130

PRINTING INFO ONLY
FULL SIZE SHEET AREA (36 X 132)= 33 SQ. FT.
1/2 SIZE SHEET AREA (1/4 OF FULL)= 8.25 SQ. FT.

PRINT TRIM LINE

C
B
A

LDW280-52020 J

LDW280-52020 J

03/03

NAS 9-1100

CODE IDENT NO. 26512
LDW280-52020 SH 5

	GRUMMAN AIRCRAFT ENGRG CORP., BETHPAGE, L. I., NEW YORK			
LEM	SIZE J	CODE IDENT NO. 26512	LDW280-52020	J 5
MODEL OR END ITEM	SCALE NOTED		SHEET 5.00	

THIS IS AN ORIGINAL DRAWING

4/4

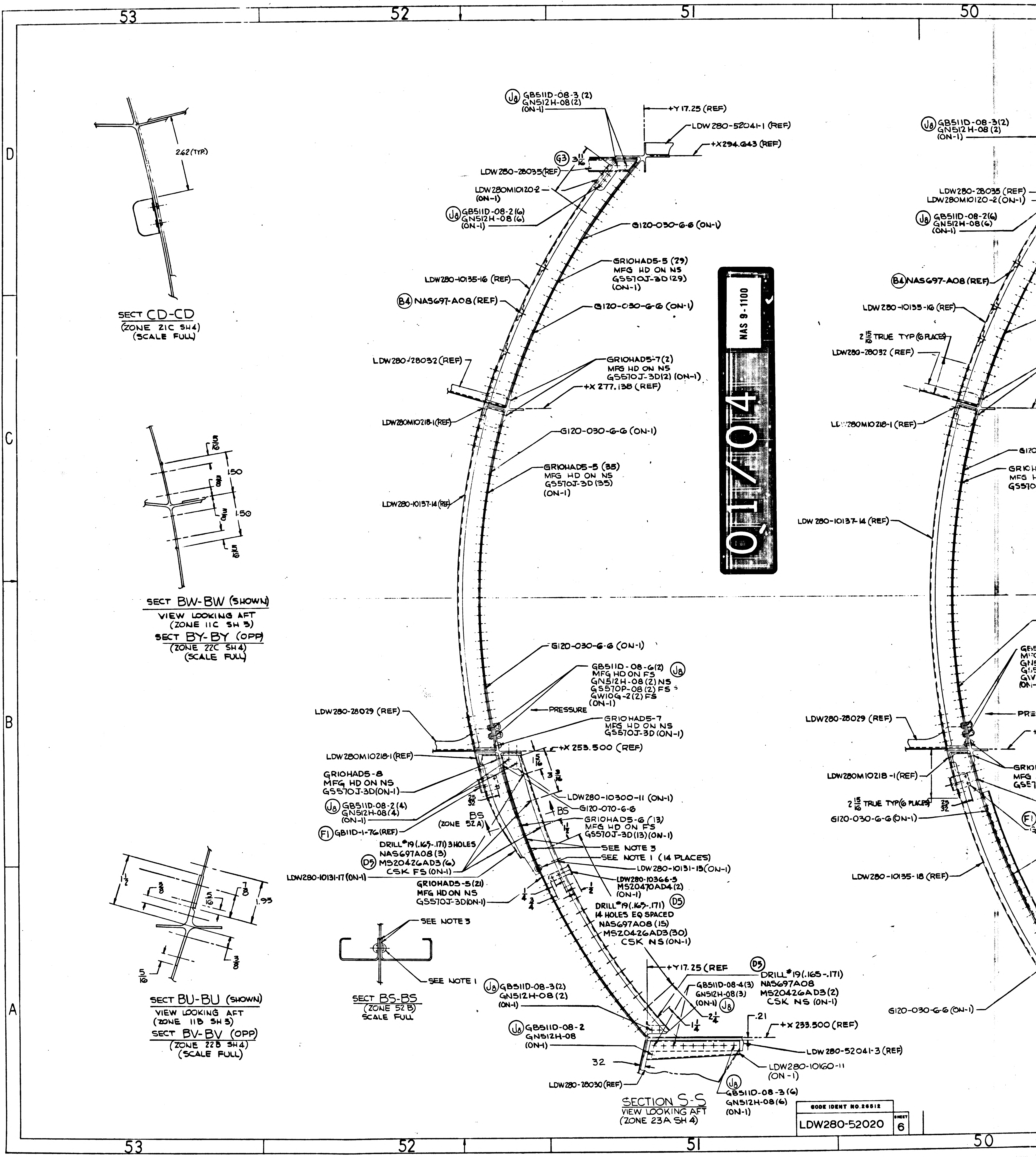
53
52
51
50
D
C
B
A
2.62 (TYP.)
1.50
1.50
$\frac{5}{16}$
$\frac{3}{8}$
$1\frac{1}{2}$
$\frac{7}{8}$
1.93
(J8) GB511D-08-3 (2)
GN512H-08 (2)
(ON-1)
+Y 17.25 (REF)
LDW 280-52041-1 (REF)
+X294.643 (REF)
(G3) $3\frac{11}{16}$
LDW 280-28035 (REF)
LDW 280M10120-2
(ON-1)
(J8) GB511D-08-2 (6)
GN512H-08 (6)
(ON-1)
G120-030-6-6 (ON-1)
GR10HAD5-5 (29)
MFG HD ON NS
GS570J-3D (29)
(ON-1)
LDW280-10135-16 (REF)
(B4) NAS697-A08 (REF)
G120-030-6-6 (ON-1)
LDW280-28032 (REF)
GR10HAD5-7 (2)
MFG HD ON NS
GS570J-3D (2) (ON-1)
+X 277.138 (REF)
LDW280M10218-1 (REF)
G120-030-6-6 (ON-1)
GR10HAD5-5 (35)
MFG HD ON NS
GS570J-3D (35)
(ON-1)
LDW280-10137-14 (REF)
G120-030-6-6 (ON-1)
GB511D-08-6 (2) (J8)
MFG HD ON FS
GN512H-08 (2) NS
GS570P-08 (2) FS
GW10G-2 (2) FS
(ON-1)
PRESSURE
LDW280-28029 (REF)
GR10HAD5-7
MFG HD ON NS
GS570J-3D (ON-1)
+X 253.500 (REF)
LDW280M10218-1 (REF)
$1\frac{5}{16}$
$3\frac{3}{16}$
GR10HAD5-8
MFG HD ON NS
GS570J-3D (ON-1)
LDW280-10300-11 (ON-1)
(J8) GB511D-08-2 (4)
GN512H-08 (4)
(ON-1)
$\frac{25}{32}$
BS
(ZONE 52A)
BS
G120-070-6-6
(F1) GB11D-1-76 (REF)
GR10HAD5-6 (13)
MFG HD ON FS
GS570J-3D (13) (ON-1)
$\frac{1}{2}$
DRILL #19 (.165-.171) 3 HOLES
NAS697A08 (3)
(D5) MS20426AD3 (6)
CSK FS (ON-1)
SEE NOTE 3
SEE NOTE 1 (14 PLACES)
LDW280-10131-15 (ON-1)
LDW280-10131-17 (ON-1)
GR10HAD5-5 (21)
MFG HD ON NS
GS570J-3D (ON-1)
LDW280-10366-5
MS20470AD4 (2)
(ON-1)
$\frac{1}{4}$
$\frac{3}{4}$
$\frac{1}{2}$
DRILL #19 (.165-.171) (D5)
14 HOLES EQ SPACED
NAS697A08 (15)
MS20426AD3 (30)
CSK NS (ON-1)
SEE NOTE 3
SEE NOTE 1
+Y17.25 (REF
(D5)
DRILL #19 (.165-.171)
NAS697A08
MS20426AD3 (2)
CSK NS (ON-1)
(J8) GB511D-08-3 (2)
GN512H-08 (2)
(ON-1)
GB511D-08-4 (3)
GN512H-08 (3)
(ON-1) (J8)
$2\frac{1}{4}$
$1\frac{1}{4}$
.21
+X 233.500 (REF)
(J8) GB511D-08-2
GN512H-08
(ON-1)
LDW280-52041-3 (REF)
32
LDW280-10160-11
(ON-1)
LDW280-28030 (REF)
(J8)
GB511D-08-3 (6)
GN512H-08 (6)
(ON-1)
(J8) GB511D-08-3 (2)
GN512H-08 (2)
(ON-1)
LDW280-28035 (REF)
LDW280M10120-2 (ON-1)
(J8) GB511D-08-2 (6)
GN512H-08 (6)
(ON-1)
(B4) NAS697-A08 (REF)
LDW280-10135-16 (REF)
$2\frac{15}{16}$ TRUE TYP (6 PLACES)
LDW280-28032 (REF)
LDW280M10218-1 (REF)
LDW280-10137-14 (REF)
LDW280-28029 (REF)
LDW280M10218-1 (REF)
$2\frac{15}{16}$ TRUE TYP (6 PLACES)
$\frac{25}{32}$
G120-030-6-6 (ON-1)
(F1)
LDW280-10135-18 (REF)
G120-030-6-6 (ON-1)

SECT CD-CD
(ZONE 21C SH4)
(SCALE FULL)

SECT BW-BW (SHOWN)
VIEW LOOKING AFT
(ZONE 11C SH 3)
SECT BY-BY (OPP)
(ZONE 22C SH4)
(SCALE FULL)

SECT BU-BU (SHOWN)
VIEW LOOKING AFT
(ZONE 11B SH 3)
SECT BV-BV (OPP)
(ZONE 22B SH4)
(SCALE FULL)

SECT BS-BS
(ZONE 52 B)
SCALE FULL

SECTION S-S
VIEW LOOKING AFT
(ZONE 23A SH 4)

CODE IDENT NO. 26512	SHEET
LDW280-52020	6

01/04
NAS 9-1100

02/04 NAS 9-1100

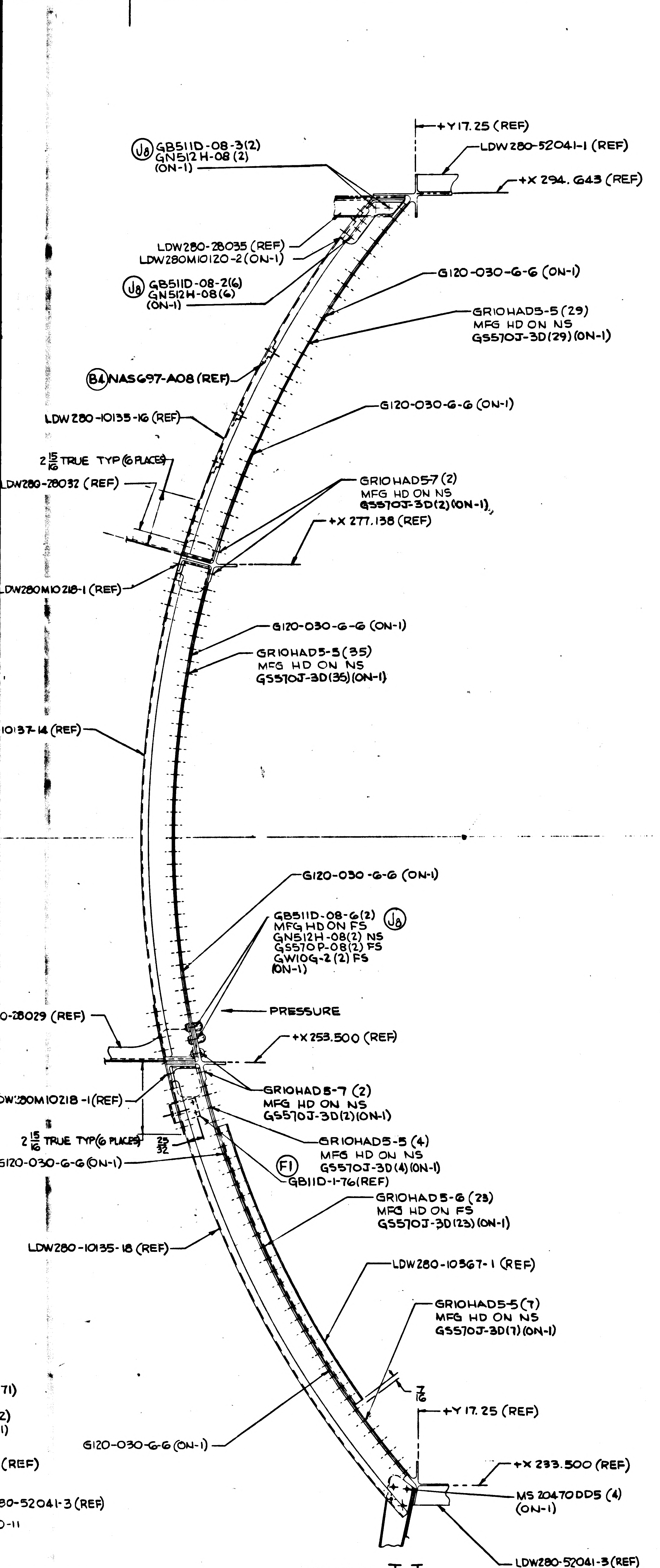
GB511D-08-3(2)
GN512H-08(2)
(ON-1)
J8
+Y17.25 (REF)
LDW280-52041-1 (REF)
+X 294.643 (REF)
LDW280-28035 (REF)
LDW280M10120-2 (ON-1)
J8 GB511D-08-2(6)
GN512H-08(6)
(ON-1)
G120-030-6-6 (ON-1)
GR10HAD5-5 (29)
MFG HD ON NS
GS570J-3D(29)(ON-1)
B4 NAS697-A08 (REF)
LDW280-10135-16 (REF)
G120-030-6-6 (ON-1)
2 15/16 TRUE TYP (6 PLACES)
LDW280-28032 (REF)
GR10HAD5-7 (2)
MFG HD ON NS
GS570J-3D(2)(ON-1)
+X 277.138 (REF)
LDW280M10218-1 (REF)
G120-030-6-6 (ON-1)
GR10HAD5-5 (35)
MFG HD ON NS
GS570J-3D(35)(ON-1)
10137-14 (REF)
G120-030-6-6 (ON-1)
GB511D-08-6(2)
MFG HD ON FS
GN512H-08(2) NS
GS570P-08(2) FS
GW10G-2(2) FS
(ON-1)
J8
-28029 (REF)
PRESSURE
+X 253.500 (REF)
LDW280M10218-1 (REF)
GR10HAD5-7 (2)
MFG HD ON NS
GS570J-3D(2)(ON-1)
2 15/16 TRUE TYP (6 PLACES)
23/32
G120-030-6-6 (ON-1)
GR10HAD5-5 (4)
MFG HD ON NS
GS570J-3D(4)(ON-1)
F1
GB11D-1-76(REF)
GR10HAD5-6 (23)
MFG HD ON FS
GS570J-3D(23)(ON-1)
LDW280-10135-18 (REF)
LDW280-10367-1 (REF)
GR10HAD5-5 (7)
MFG HD ON NS
GS570J-3D(7)(ON-1)
7/16
+Y 17.25 (REF)
G120-030-6-6 (ON-1)
+X 233.500 (REF)
MS 20470DD5 (4)
(ON-1)
LDW280-52041-3 (REF)

SECTION T-T
VIEW LOOKING AFT
(ZONE 23 A SH4)

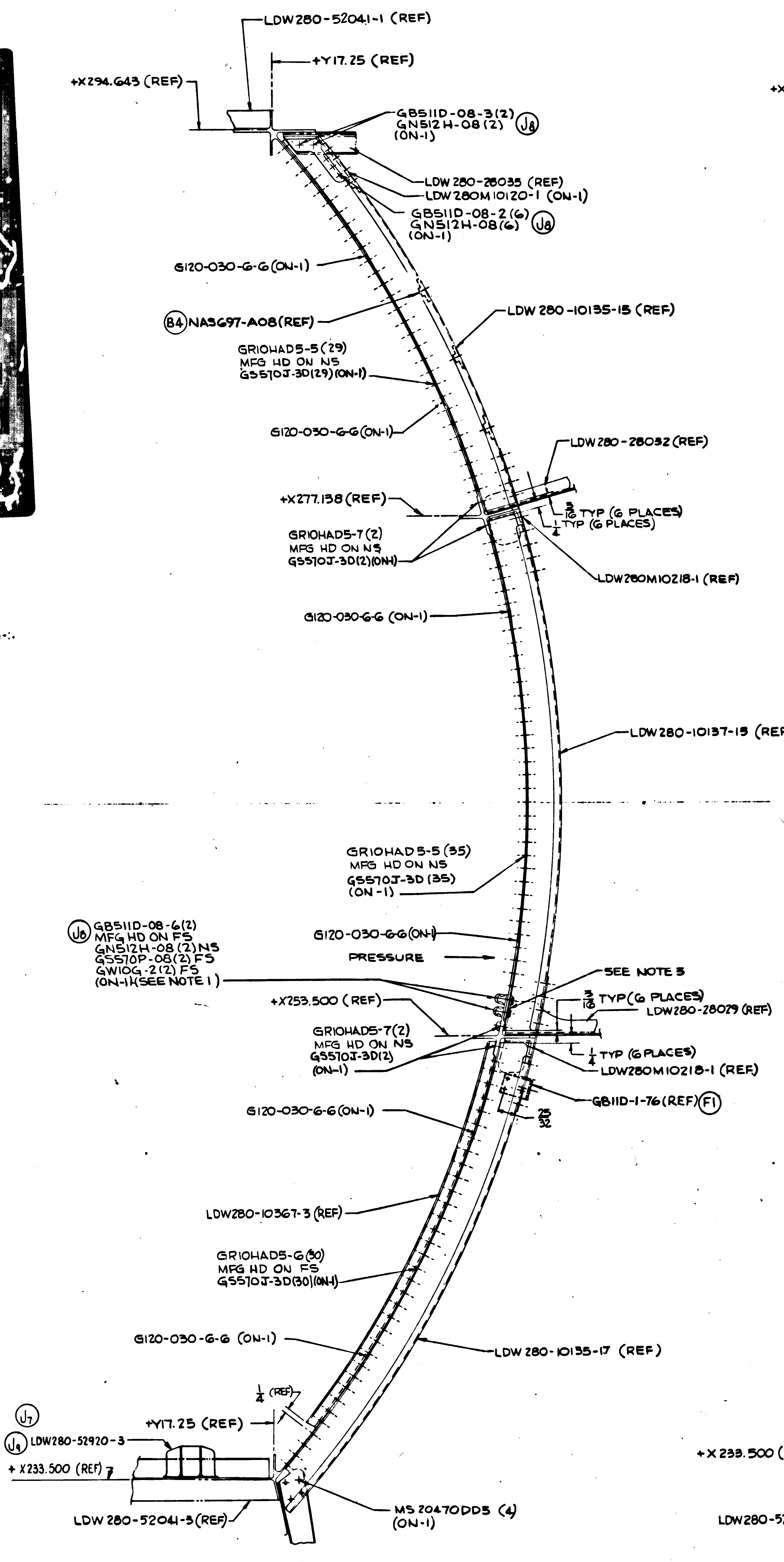
LDW280-52041-1 (REF)
+Y17.25 (REF)
+X294.643 (REF)
GB511D-08-3(2)
GN512H-08(2)
(ON-1)
J8
LDW280-28035 (REF)
LDW280M10120-1 (ON-1)
GB511D-08-2(6)
GN512H-08(6)
(ON-1)
J8
G120-030-6-6 (ON-1)
B4 NAS697-A08 (REF)
LDW280-10135-15 (REF)
GR10HAD5-5 (29)
MFG HD ON NS
GS570J-3D(29)(ON-1)
G120-030-6-6 (ON-1)
LDW280-28032 (REF)
+X277.138 (REF)
3/16 TYP (6 PLACES)
1/4 TYP (6 PLACES)
GR10HAD5-7 (2)
MFG HD ON NS
GS570J-3D(2)(ON-1)
LDW280M10218-1 (REF)
G120-030-6-6 (ON-1)
LDW280-10137-15 (REF)
GR10HAD5-5 (35)
MFG HD ON NS
GS570J-3D (35)
(ON-1)
J8 GB511D-08-6(2)
MFG HD ON FS
GN512H-08(2) NS
GS570P-08(2) FS
GW10G-2(2) FS
(ON-1)(SEE NOTE 1)
G120-030-6-6 (ON-1)
PRESSURE
SEE NOTE 3
+X253.500 (REF)
3/16 TYP (6 PLACES)
LDW280-28029 (REF)
GR10HAD5-7 (2)
MFG HD ON NS
GS570J-3D(2)
(ON-1)
1/4 TYP (6 PLACES)
LDW280M10218-1 (REF)
GB11D-1-76 (REF) F1
G120-030-6-6 (ON-1)
25/32
LDW280-10367-3 (REF)
GR10HAD5-6 (30)
MFG HD ON FS
GS570J-3D(30)(ON-1)
G120-030-6-6 (ON-1)
LDW280-10135-17 (REF)
1/4 (REF)
J7
+Y17.25 (REF)
J9 LDW280-52920-3
+X233.500 (REF)
LDW280-52041-3 (REF)
MS 20470DD5 (4)
(ON-1)

SECTION R-R
VIEW LOOKING FWD
(ZONE 24A SH4)

CODE IDENT NO. 26512	SHEET
LDW280-52020	6

03/04 NAS 9-1100

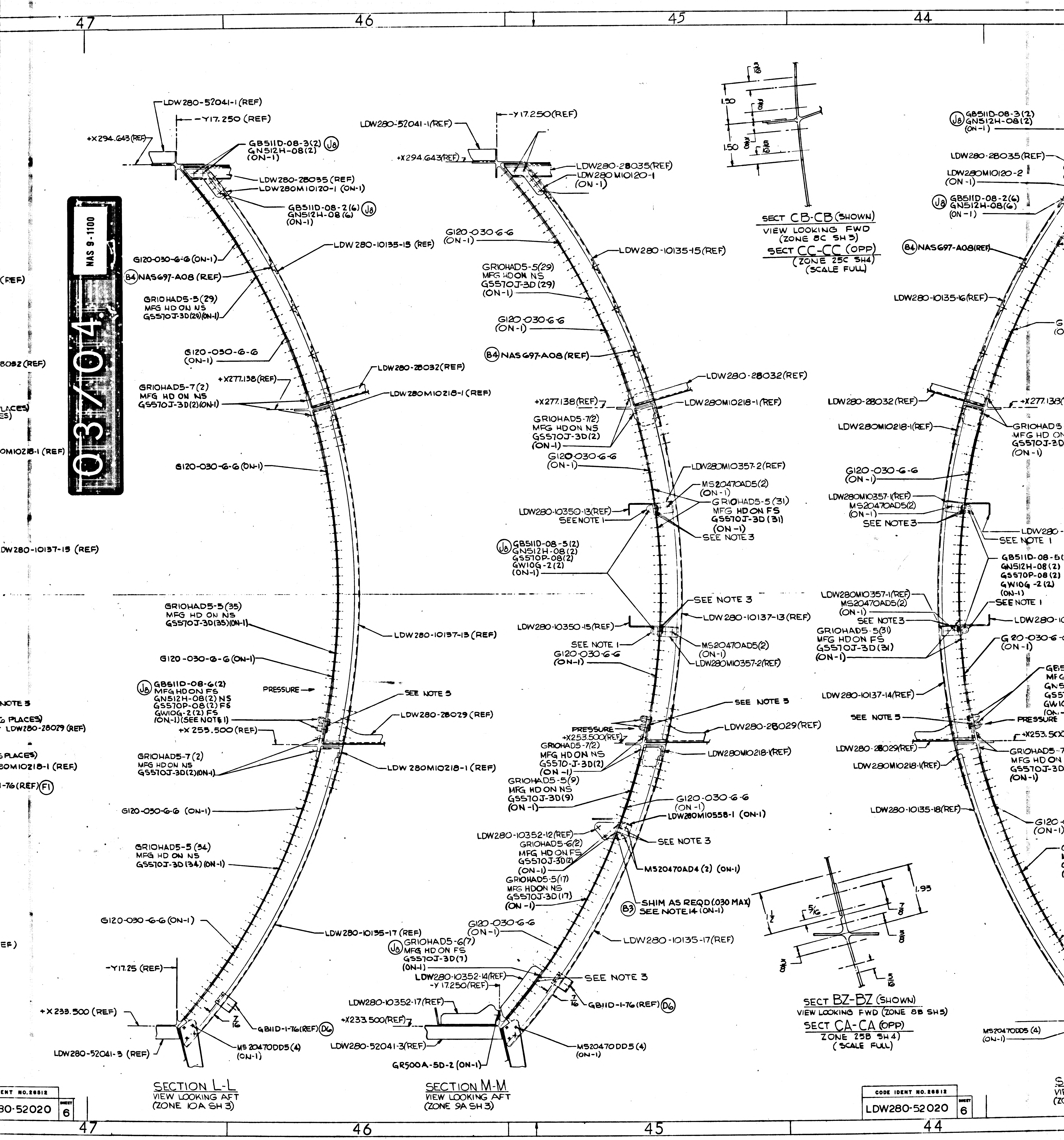
47
46
45
44
LDW280-52041-1 (REF)
-Y17.250 (REF)
+X294.643 (REF)
GB511D-08-3(2) GN512H-08(2) (ON-1) J8
LDW280-28035 (REF)
LDW280M10120-1 (ON-1)
GB511D-08-2(6) GN512H-08(6) (ON-1) J8
LDW280-10135-15 (REF)
G120-030-6-6 (ON-1)
B4 NAS697-A08 (REF)
GR10HAD5-5(29) MFG HD ON NS GS570J-3D(29)(ON-1)
G120-030-6-6 (ON-1)
LDW280-28032 (REF)
+X277.138 (REF)
GR10HAD5-7(2) MFG HD ON NS GS570J-3D(2)(ON-1)
LDW280M10218-1 (REF)
G120-030-6-6 (ON-1)
LDW280-10137-15 (REF)
GR10HAD5-5(35) MFG HD ON NS GS570J-3D(35)(ON-1)
LDW280-10137-13 (REF)
G120-030-6-6 (ON-1)
J8 GB511D-08-6(2) MFG HD ON FS GN512H-08(2) NS GS570P-08(2) FS GW10G-2(2) FS (ON-1)(SEE NOTE 1)
PRESSURE
SEE NOTE 5
LDW280-28029 (REF)
+X255.500 (REF)
GR10HAD5-7(2) MFG HD ON NS GS570J-3D(2)(ON-1)
LDW280M10218-1 (REF)
G120-030-6-6 (ON-1)
GR10HAD5-5(34) MFG HD ON NS GS570J-3D(34)(ON-1)
G120-030-6-6 (ON-1)
LDW280-10135-17 (REF)
-Y17.25 (REF)
+X233.500 (REF)
GB11D-1-76(REF) D6
LDW280-52041-3 (REF)
MS20470DD5(4) (ON-1)
SECTION L-L
VIEW LOOKING AFT
(ZONE 10A SH 3)
LDW280-52041-1(REF)
-Y17.250(REF)
+X294.643(REF)
LDW280-28035(REF)
LDW280M10120-1 (ON-1)
G120-030-6-6 (ON-1)
LDW280-10135-15(REF)
GR10HAD5-5(29) MFG HD ON NS GS570J-3D(29) (ON-1)
G120-030-6-6 (ON-1)
B4 NAS697-A08(REF)
LDW280-28032(REF)
+X277.138(REF)
LDW280M10218-1(REF)
GR10HAD5-7(2) MFG HD ON NS GS570J-3D(2) (ON-1)
G120-030-6-6 (ON-1)
LDW280M10357-2(REF)
MS20470AD5(2) (ON-1)
GR10HAD5-5(31) MFG HD ON FS GS570J-3D(31) (ON-1)
SEE NOTE 3
LDW280-10350-13(REF)
SEE NOTE 1
J8 GB511D-08-5(2) GN512H-08(2) GS570P-08(2) GW10G-2(2) (ON-1)
SEE NOTE 3
LDW280-10137-13(REF)
LDW280-10350-15(REF)
SEE NOTE 1
G120-030-6-6 (ON-1)
MS20470AD5(2) (ON-1)
LDW280M10357-2(REF)
SEE NOTE 5
PRESSURE
+X253.500(REF)
LDW280-28029(REF)
GR10HAD5-7(2) MFG HD ON NS GS570-J-3D(2) (ON-1)
LDW280M10218-1(REF)
GR10HAD5-5(9) MFG HD ON NS GS570J-3D(9) (ON-1)
G120-030-6-6 (ON-1)
LDW280M10558-1 (ON-1)
LDW280-10352-12(REF)
GR10HAD5-6(2) MFG HD ON FS GS570J-3D(2) (ON-1)
SEE NOTE 3
GR10HAD5-5(17) MFG HD ON NS GS570J-3D(17) (ON-1)
MS20470AD4(2) (ON-1)
B3 SHIM AS REQD (.030 MAX) SEE NOTE 14 (ON-1)
G120-030-6-6 (ON-1)
LDW280-10135-17 (REF)
J6 GR10HAD5-6(7) MFG HD ON FS GS570J-3D(7) (ON-1)
LDW280-10135-17(REF)
LDW280-10352-14(REF)
-Y17.250(REF)
SEE NOTE 3
LDW280-10352-17(REF)
GB11D-1-76(REF) D6
+X233.500(REF)
LDW280-52041-3(REF)
MS20470DD5(4) (ON-1)
GR500A-5D-2 (ON-1)
SECTION M-M
VIEW LOOKING AFT
(ZONE 9A SH 3)
1.50
1.50
SECT CB-CB (SHOWN)
VIEW LOOKING FWD
(ZONE 8C SH 3)
SECT CC-CC (OPP)
(ZONE 25C SH 4)
(SCALE FULL)
1.93
1/2
5/16
7/8
3/8
5/16
SECT BZ-BZ (SHOWN)
VIEW LOOKING FWD (ZONE 8B SH 5)
SECT CA-CA (OPP)
ZONE 25B SH 4)
(SCALE FULL)
J8 GB511D-08-3(2) GN512H-08(2) (ON-1)
LDW280-28035(REF)
LDW280M10120-2 (ON-1)
J8 GB511D-08-2(6) GN512H-08(6) (ON-1)
B4 NAS697-A08(REF)
LDW280-10135-16(REF)
LDW280-28032(REF)
LDW280M10218-1(REF)
G120-030-6-6 (ON-1)
LDW280M10357-1(REF)
MS20470AD5(2) (ON-1)
SEE NOTE 3
SEE NOTE 1
LDW280M10357-1(REF)
MS20470AD5(2) (ON-1)
SEE NOTE 3
GR10HAD5-5(31) MFG HD ON FS GS570J-3D(31) (ON-1)
SEE NOTE 1
LDW280-10137-14(REF)
SEE NOTE 5
PRESSURE
LDW280-28029(REF)
LDW280M10218-1(REF)
LDW280-10135-18(REF)
MS20470DD5(4) (ON-1)
CODE IDENT NO. 26512
LDW280-52020
SHEET 6

45 44 43 42

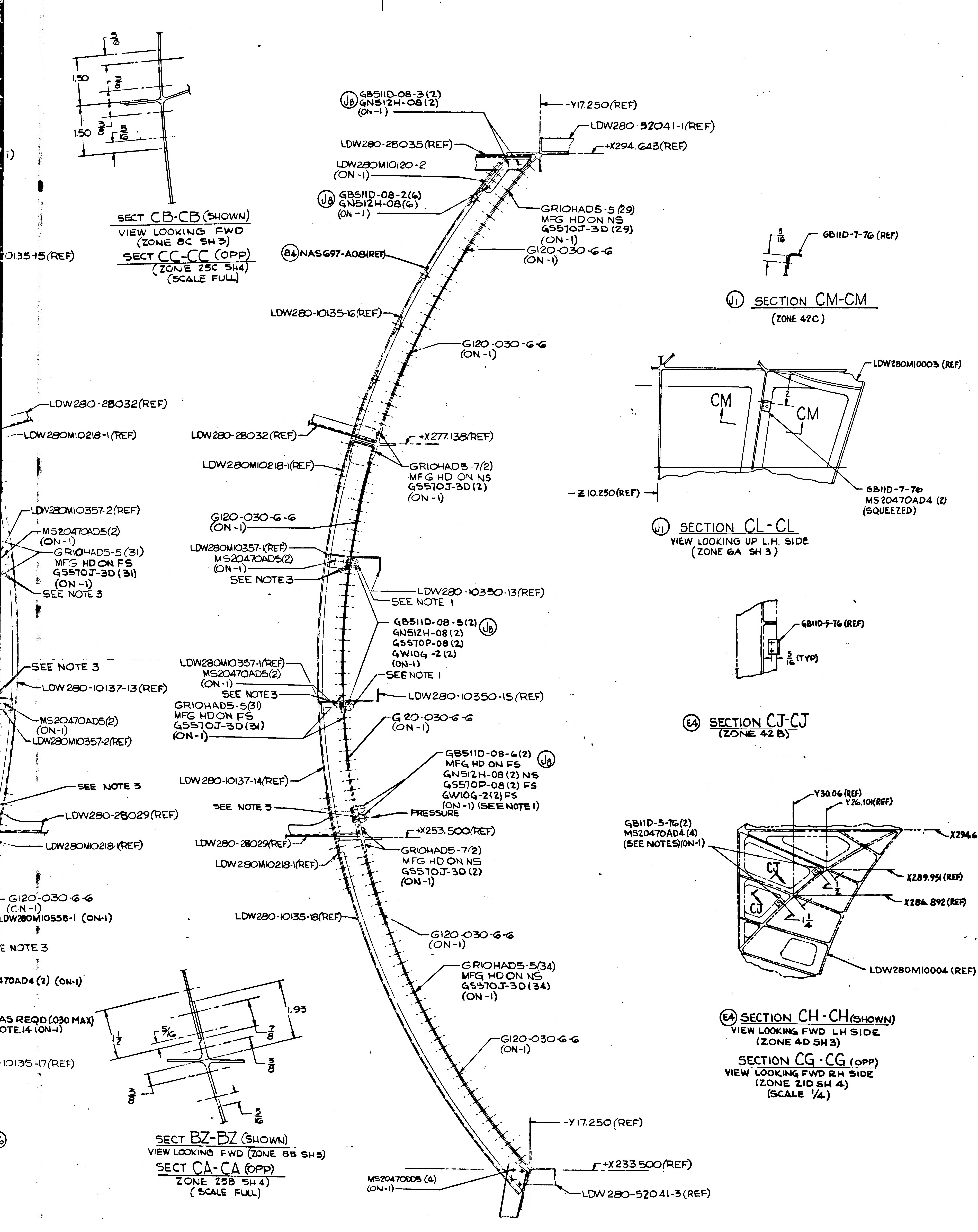

1.50
1.50
5/16
3/8
SECT CB-CB (SHOWN)
VIEW LOOKING FWD
(ZONE 8C SH 3)
SECT CC-CC (OPP)
(ZONE 25C SH4)
(SCALE FULL)
F)
0135-15(REF)
J8 GB511D-08-3(2)
GN512H-08(2)
(ON-1)
-Y17.250(REF)
LDW280-52041-1(REF)
+X294.643(REF)
LDW280-28035(REF)
LDW280M10120-2
(ON-1)
J8 GB511D-08-2(6)
GN512H-08(6)
(ON-1)
GRIOHAD5-5(29)
MFG HD ON NS
GS570J-3D(29)
(ON-1)
G120-030-6-6
(ON-1)
B4 NAS697-A08(REF)
LDW280-10135-16(REF)
G120-030-6-6
(ON-1)
LDW280-28032(REF)
LDW280M10218-1(REF)
LDW280-28032(REF)
+X277.138(REF)
LDW280M10218-1(REF)
GRIOHAD5-7(2)
MFG HD ON NS
GS570J-3D(2)
(ON-1)
G120-030-6-6
(ON-1)
LDW280M10357-2(REF)
MS20470AD5(2)
(ON-1)
GRIOHAD5-5(31)
MFG HD ON FS
GS570J-3D(31)
(ON-1)
SEE NOTE 3
LDW280M10357-1(REF)
MS20470AD5(2)
(ON-1)
SEE NOTE 3
LDW280-10350-13(REF)
SEE NOTE 1
GB511D-08-5(2) J8
GN512H-08(2)
GS570P-08(2)
GW10G-2(2)
(ON-1)
SEE NOTE 1
SEE NOTE 3
LDW280-10137-13(REF)
MS20470AD5(2)
(ON-1)
LDW280M10357-2(REF)
LDW280M10357-1(REF)
MS20470AD5(2)
(ON-1)
SEE NOTE 3
GRIOHAD5-5(31)
MFG HD ON FS
GS570J-3D(31)
(ON-1)
LDW280-10350-15(REF)
G20-030-6-6
(ON-1)
GB511D-08-6(2) J8
MFG HD ON FS
GN512H-08(2) NS
GS570P-08(2) FS
GW10G-2(2) FS
(ON-1) (SEE NOTE 1)
SEE NOTE 3
LDW280-28029(REF)
LDW280M10218-1(REF)
LDW280-10137-14(REF)
SEE NOTE 3
PRESSURE
+X253.500(REF)
LDW280-28029(REF)
LDW280M10218-1(REF)
GRIOHAD5-7(2)
MFG HD ON NS
GS570J-3D(2)
(ON-1)
G120-030-6-6
(ON-1)
LDW280M10558-1 (ON-1)
E NOTE 3
470AD4 (2) (ON-1)
LDW280-10135-18(REF)
G120-030-6-6
(ON-1)
GRIOHAD5-5(34)
MFG HD ON NS
GS570J-3D(34)
(ON-1)
AS REQD (.030 MAX)
OTE.14 (ON-1)
-10135-17(REF)
1.93
1 1/2
5/16
7/8
3/8
3/8
5/16
G120-030-6-6
(ON-1)
SECT BZ-BZ (SHOWN)
VIEW LOOKING FWD (ZONE 8B SH 3)
SECT CA-CA (OPP)
ZONE 25B SH 4)
(SCALE FULL)
-Y17.250(REF)
+X233.500(REF)
MS20470DD5 (4)
(ON-1)
LDW280-52041-3(REF)
SECTION N-N
VIEW LOOKING FWD
(ZONE 9A SH 3)
5/16
GB11D-7-76 (REF)
J1 SECTION CM-CM
(ZONE 42C)
LDW280M10003 (REF)
CM
CM
2
-Z10.250(REF)
GB11D-7-76
MS20470AD4 (2)
(SQUEEZED)
J1 SECTION CL-CL
VIEW LOOKING UP L.H. SIDE
(ZONE 6A SH 3)
GB11D-5-76(REF)
5/16 (TYP)
E4 SECTION CJ-CJ
(ZONE 42 B)
Y30.06 (REF)
Y26.101(REF)
GB11D-5-76(2)
MS20470AD4 (4)
(SEE NOTE 5)(ON-1)
X294.643 (REF)
CJ
CJ
2
1 1/4
X289.951 (REF)
X284.892 (REF)
LDW280M10004 (REF)
E4 SECTION CH-CH (SHOWN)
VIEW LOOKING FWD LH SIDE
(ZONE 4D SH 3)
SECTION CG-CG (OPP)
VIEW LOOKING FWD RH SIDE
(ZONE 21D SH 4)
(SCALE 1/4)

MANUFACTURING OPERATIONS
UNLESS OTHERWISE SPECIFIED
NOTES CHECKED √ APPLY TO THIS DWG.

~~PART NUMBER AND ALL OTHER MARKINGS IN REGION MARKED ▭ USE BOTH SIDES IF NECESSARY.~~

~~FILLET AND INSIDE CORNER RADII TOLERANCES~~
~~.016R TO .062R ± .010~~
~~.063R TO .250R ± .015~~
~~OVER .250R ± .031~~

~~DEPTH SHOWN FOR TAPPED HOLES IS FULL THDS. 2-3 IMP THDS. BEYOND PERMISSIBLE.~~

~~EXTERNAL THREAD LENGTH SHOWN INCLUDES 2 IMPERFECT THREADS MAX.~~

~~DO NOT CADMIUM PLATE & PAINT HOLES OR SURFACES MARKED WITH DOUBLE ASTERISK.~~

~~MISMATCH STEP OF ± .005 PERMISSIBLE DUE TO CHANGE OF CUTTERS AT INSIDE INTERSECTING SURFACES.~~

~~DIAMETERS MARKED MUST BE CONCENTRIC WITHIN FULL INDICATOR READING~~

~~HOLES MUST BE KEPT FREE OF CHROME PLATING SOLUTION.~~

~~ALL DIMENSIONS SHOWN TO BE MET AFTER CADMIUM PLATING. THICKNESS OF PLATE .0003 MIN. TO .0005 MAX. MIN. THICKNESS TO BE .0002 ON THREADED AREAS. NO ALLOWANCE FOR PLATING IN HOLES~~

~~125 √ SURFACE ROUGHNESS INCLUDING REAMED HOLES PER MIL-STD-10~~

~~200 √ FOR ALL DRILLED HOLES~~

~~REMOVE ALL BURRS. BREAK ALL EDGES .015-.031~~

~~INSPECTION INFORMATION MINIMUM PERMISSIBLE AVERAGE EDGE DISTANCE MARKED IS~~

~~SYMBOL √ DENOTES SURFACE TO BE MACHINED~~

~~UNLESS OTHERWISE SPECIFIED TOLERANCE ON FLANGES IS ± 1/32~~

~~LENGTHS OF AN, NAS & MS AL ALY RIVETS SHORTER THAN 1 INCH ARE NOT SPECIFIED.~~

~~TOLERANCE ON LOFTED DELINEATIONS IS~~

DWG SIZE 40 X 118

PRINTING INFO ONLY
FULL SIZE SHEET AREA (42 x 120) — 35 SQ FT.
1/2 SIZE SHEET AREA (1/4 OF FULL) — 9.75 SQ FT.

PRINT TRIM LINE

D C B A

04/04

NAS 9-1100

LDW280-52020 J

LDW280-52020 J

CODE IDENT NO. 26512	SHEET
LDW280-52020	6

GRUMMAN AIRCRAFT ENGRG CORP., BETHPAGE, L. I., NEW YORK

MODEL OR END ITEM	SIZE	CODE IDENT NO.		
LEM	K	26512	LDW280-52020	J (T)
	SCALE HALF		SHEET 6.00	

44 43 42 THIS IS AN ORIGINAL DRAWING

ENG 32.1 REV 3-65

GRUMMAN AIRCRAFT ENGINEERING CORP.
CODE IDENT NO. 26512
ENGINEERING ORDER

DWG. NO. LDW280-52020		EO NO. B2
CONTROL INFO NO. LEM-3-2350		

IN FIELD SH 4
ZONE 25D ℄ B/M

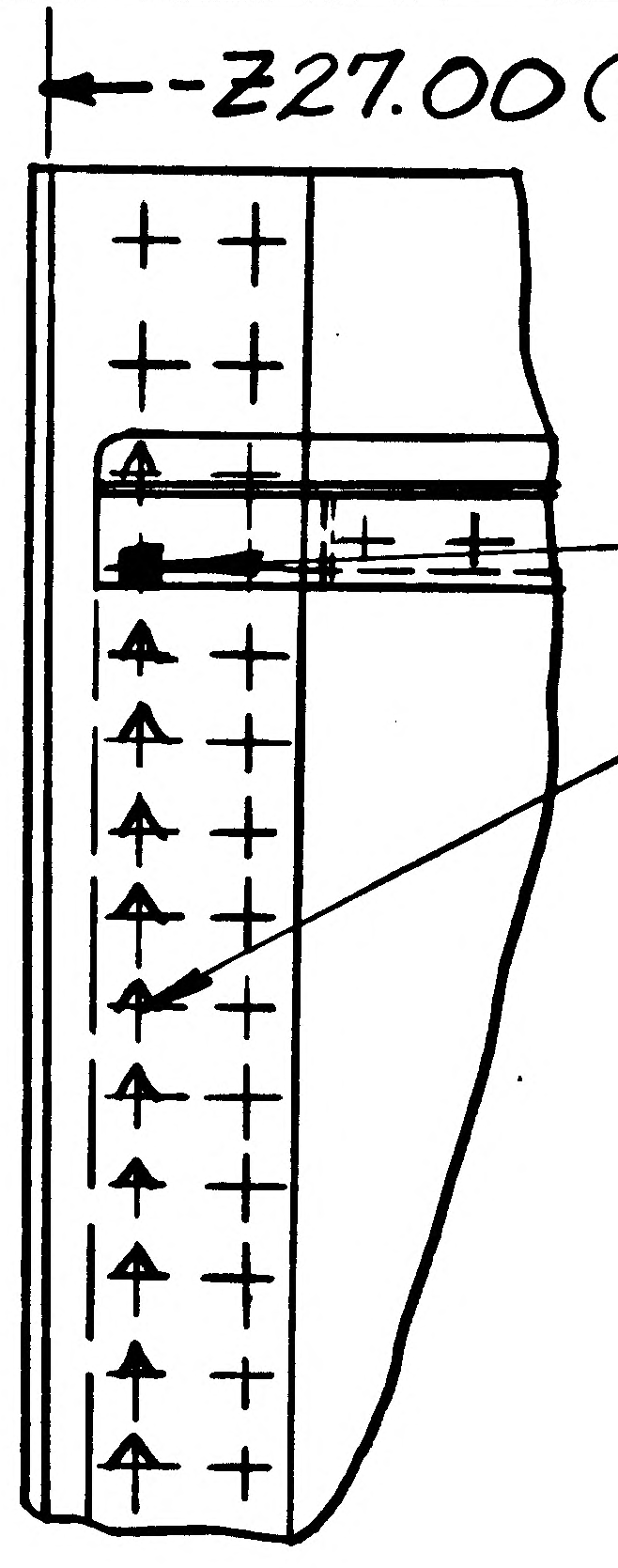

HL10V-5-5(1)
HL10V-5-4(11)
659013-8 (12) N.S.
GW10G-2 (12) N.S.
HL 70-5 (12), (ON-3)
WAS
75LP-E-5-2 (11) -3(1)
MFG. HD N.S.
NAS 1080 D5 (12)
5-147 (12), (ON-3)

VIEW G-G (REF) SHOWN
VIEW E-E (REF) OPP
LDW280-52020-3 INSTL (REF)

DETAIL SPEC REQ		CL II ENGRG CHG		CL I ENGRG CHG		3

REASON FOR EO
EXISTING FASTENERS CANNOT BE INSTALLED

DESCRIPTION OF EO
IN FIELD ℄ B/M FOR-3
HL10V-5-5(1), -4(11), 659013-8(12) N.S., GW10G-2 (12) N.S., HL70-5 (12) (ON-3) WAS 75LPE5-2(11)-3(1), HD N.S., NAS1080D5(12), 5-147(12) (ON-3)

GAEC EO RELEASE: CE

MODEL	PROCURING ACTIVITY NO.	GAEC UNIT NO.	SUB CONTR UNIT NO.
LEM		LEM-2 (32)	

DRAWING CHANGE REQD: REVISE DWG	RECORD EO	DISPOSITION OF PARTS: REWORK	SCRAP
✓		✓	

APPROVED BY	JAP			WP	BM		RMC	EJ
DATE	11/4/66			3/11/66	2-18-66	2-18-66	11-4-66	2-23-66
	VDI	SUPPORT	RELIAB. GROUP	GROUP LEADER	STRESS GROUP	LIAISON ENGRG	PROJ ENGRG	~~GOVT~~

PRIORITY	DRAWING TITLE	DRAWING NO.	EO NO.
C3	MID SECTION SUB ASS'Y ASCENT STAGE	LDW280-52020	B2

B
ISSUED BY S.J. TARTAMELLA 2-18-66 (X2151) SECTION VDI PHILLIPS GROUP NO. 335 PL 35

0 1 NAS 9-1100

ENG 32.1 REV 3-65

GRUMMAN AIRCRAFT ENGINEERING CORP.
CODE IDENT NO. 26512
ENGINEERING ORDER

DWG. NO. LEO280-
EO NO. 249
CONTROL INFO NO. LDW280-A-0030

IN GENERAL NOTES ADD THE FOLLOWING SEALING NOTE FOR ALL DOUBLERS THAT CONTAIN "D" SHAPED HOLES:

** SEAL ALL AROUND EDGE OF DOUBLER WITH EPON 919, LSM 14-4103, AS PER LSP 14-14102

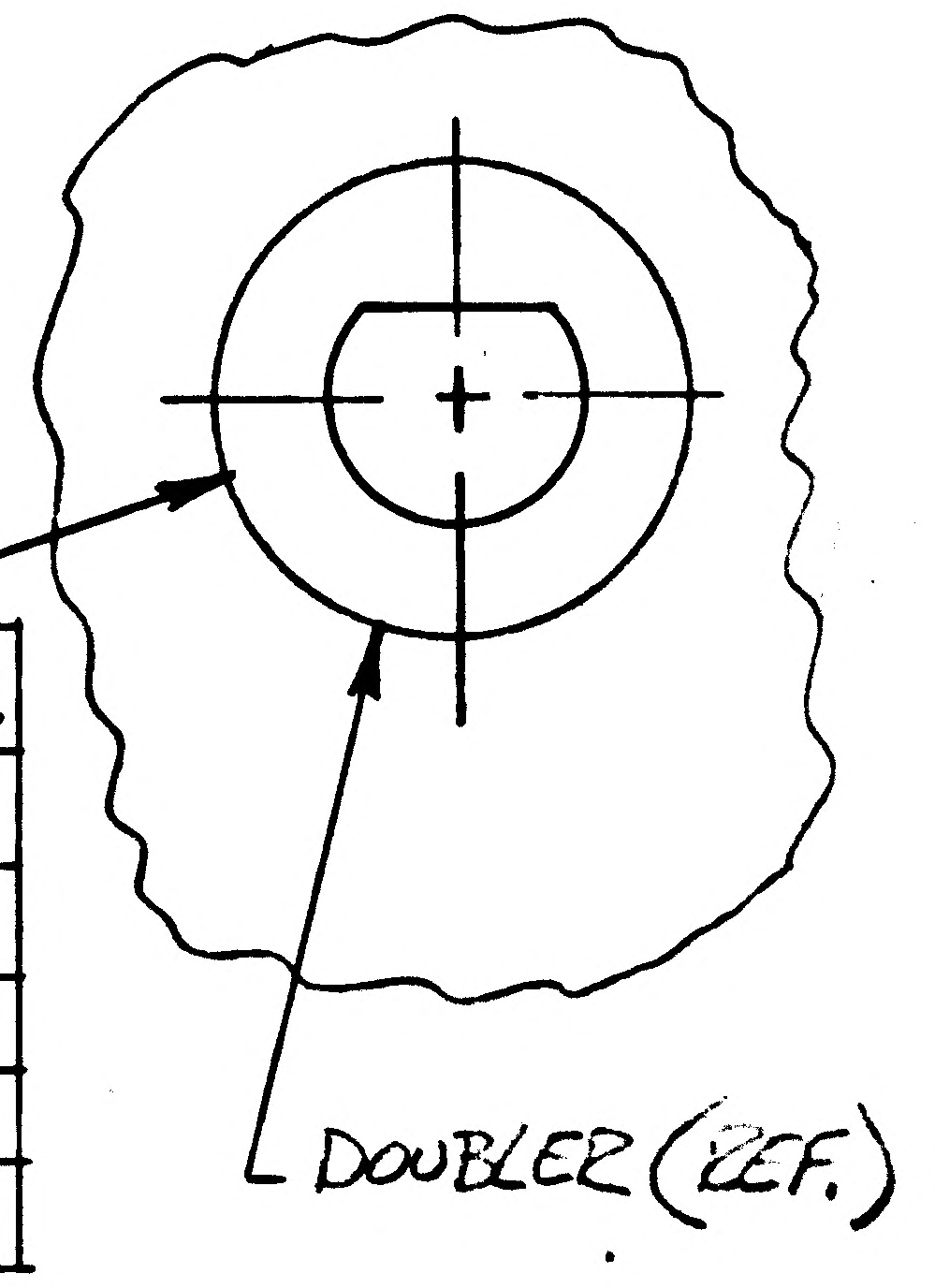

DWG NUMBER*	DWG TITLE	EFFECTIVITY	EO NO.
✓ LDW280-28020	M/S ~ SUB ASSY ~ ASCENT	LTA-8 (18)	J1
✓ LDW280-51020	M/S ~ SUB ASSY ~ ASCENT	LEM-1 (31)	H2
✓ LDW290-52020	M/S ~ SUB ASSY ~ ASCENT	LEM-2 (32)	H3
LDW280-28318	DOUBLER INSTL-A/S ~ M/S ~ -Z27	LEM-1 (31), 2 (32)	A2
LDW280-28339	DOUBLER INSTL-A/S ~ M/S ~ +Z27	& LTA-8 (18)	A3

** USE NEXT HIGHEST NOTE NO.

3

DETAIL SPEC REQ ☐ CL II ENGRG CHG ☐ CL I ENGRG CHG ☐

REASON FOR EO: TO INSURE PROPER SEALING AROUND DOUBLERS

DESCRIPTION OF EO: ON DWG NO * ADDED GENERAL NOTE NO. **

② GAEC EO RELEASE: LE 9-8

MODEL	EFFECTIVITY: PROCURING ACTIVITY NO.	GAEC UNIT NO.	SUB CONTR UNIT NO.
LEM		NOTED	

DRAWING CHANGE REQD: ✓ REVISE DWG; RECORD EO
DISPOSITION OF PARTS: ✓ REWORK; SCRAP

APPROVED BY	WT	LBG	—	—	FD		RMC	
DATE	9/6/66	9/9/66	—	~	9-7-66		9-8	9-7-66
	VDI	~~SUPPORT~~ WTS	RELIAB. GROUP	GROUP LEADER	STRESS GROUP	LIAISON ENGRG	PROJ ENGRG	

PRIORITY: C
DRAWING TITLE: NOTED
DRAWING NO.: LEO280
EO NO.: 249

ISSUED BY E.L. HARRIGAN 9-6-66 SECTION VDI GROUP NO. 335 PL 5 WT

01 NAS 9-1100

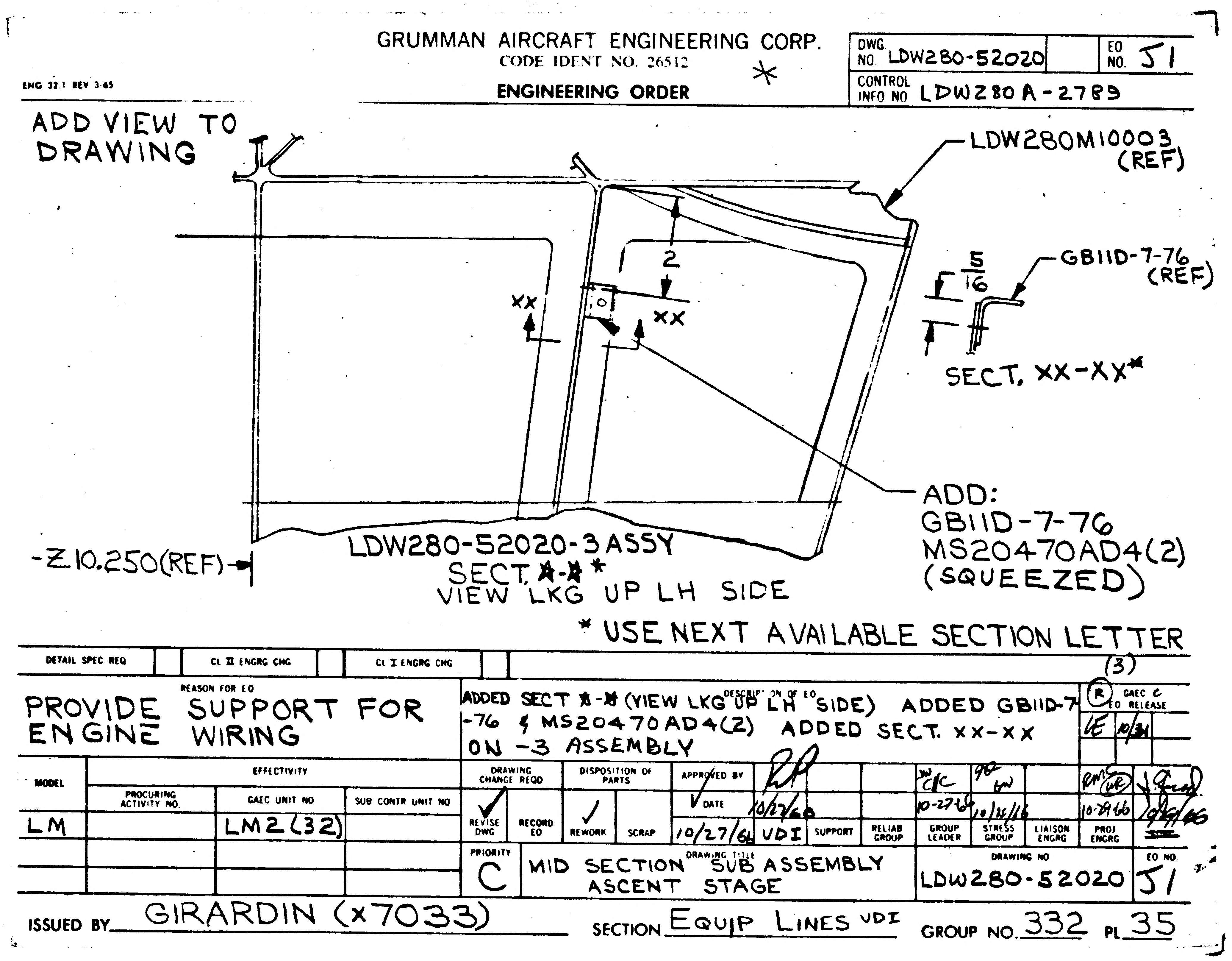

ENG 32.1 REV 3-65

GRUMMAN AIRCRAFT ENGINEERING CORP.
CODE IDENT NO. 26512
ENGINEERING ORDER

*

DWG NO. LDW280-52020 | EO NO. J1
CONTROL INFO NO LDW280A-2789

ADD VIEW TO DRAWING

LDW280M10003 (REF)
2
XX
XX
5/16
GB11D-7-76 (REF)
SECT. XX-XX*
ADD:
GB11D-7-76
MS20470AD4(2)
(SQUEEZED)
-Z10.250(REF)
LDW280-52020-3 ASSY

SECT. ~~A-A~~ *
VIEW LKG UP LH SIDE

* USE NEXT AVAILABLE SECTION LETTER

DETAIL SPEC REQ		CL II ENGRG CHG		CL I ENGRG CHG	

REASON FOR EO: PROVIDE SUPPORT FOR ENGINE WIRING

DESCRIPTION OF EO: ADDED SECT ~~A-A~~ (VIEW LKG UP LH SIDE) ADDED GB11D-7-76 & MS20470AD4(2) ADDED SECT. XX-XX ON -3 ASSEMBLY

(3)

Ⓡ GAEC EO RELEASE: LE 10/31

MODEL	EFFECTIVITY: PROCURING ACTIVITY NO.	GAEC UNIT NO	SUB CONTR UNIT NO
LM		LM2 (32)	

DRAWING CHANGE REQD		DISPOSITION OF PARTS		APPROVED BY								
✓		✓		✓ DATE	10/27/66			CJC 10-27-66	10/28/66		10-29-66	10/31/66
REVISE DWG	RECORD EO	REWORK	SCRAP	10/27/66	VDI	SUPPORT	RELIAB GROUP	GROUP LEADER	STRESS GROUP	LIAISON ENGRG	PROJ ENGRG	

PRIORITY: C
DRAWING TITLE: MID SECTION SUB ASSEMBLY ASCENT STAGE
DRAWING NO: LDW280-52020
EO NO.: J1

ISSUED BY GIRARDIN (x7033) SECTION EQUIP LINES VDI GROUP NO. 332 PL 35

01

NAS 9-1100

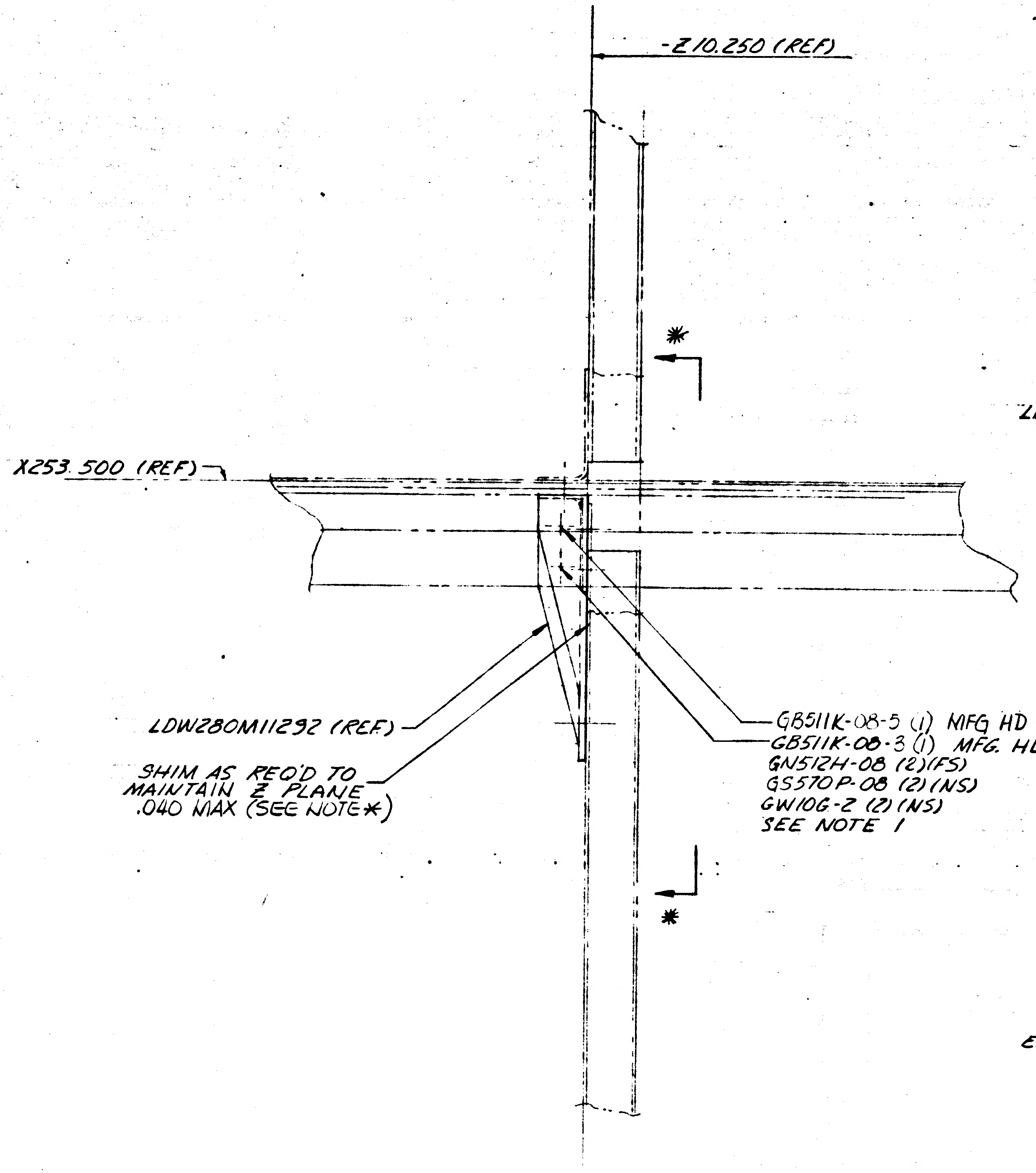

-Z10.250 (REF)
X253.500 (REF)
LDW280M11292 (REF)
SHIM AS REQ'D TO MAINTAIN Z PLANE .040 MAX (SEE NOTE *)
GB511K-08-5 (1) MFG HD (NS)
GB511K-08-3 (1) MFG. HD (NS)
GN512H-08 (2)(FS)
GS570P-08 (2)(NS)
GW106-2 (2)(NS)
SEE NOTE 1
*
*

VIEW LOOKING INBD
LEFT HAND SIDE
-Z10.250 (SHN)
+Z10.250 (OPP)

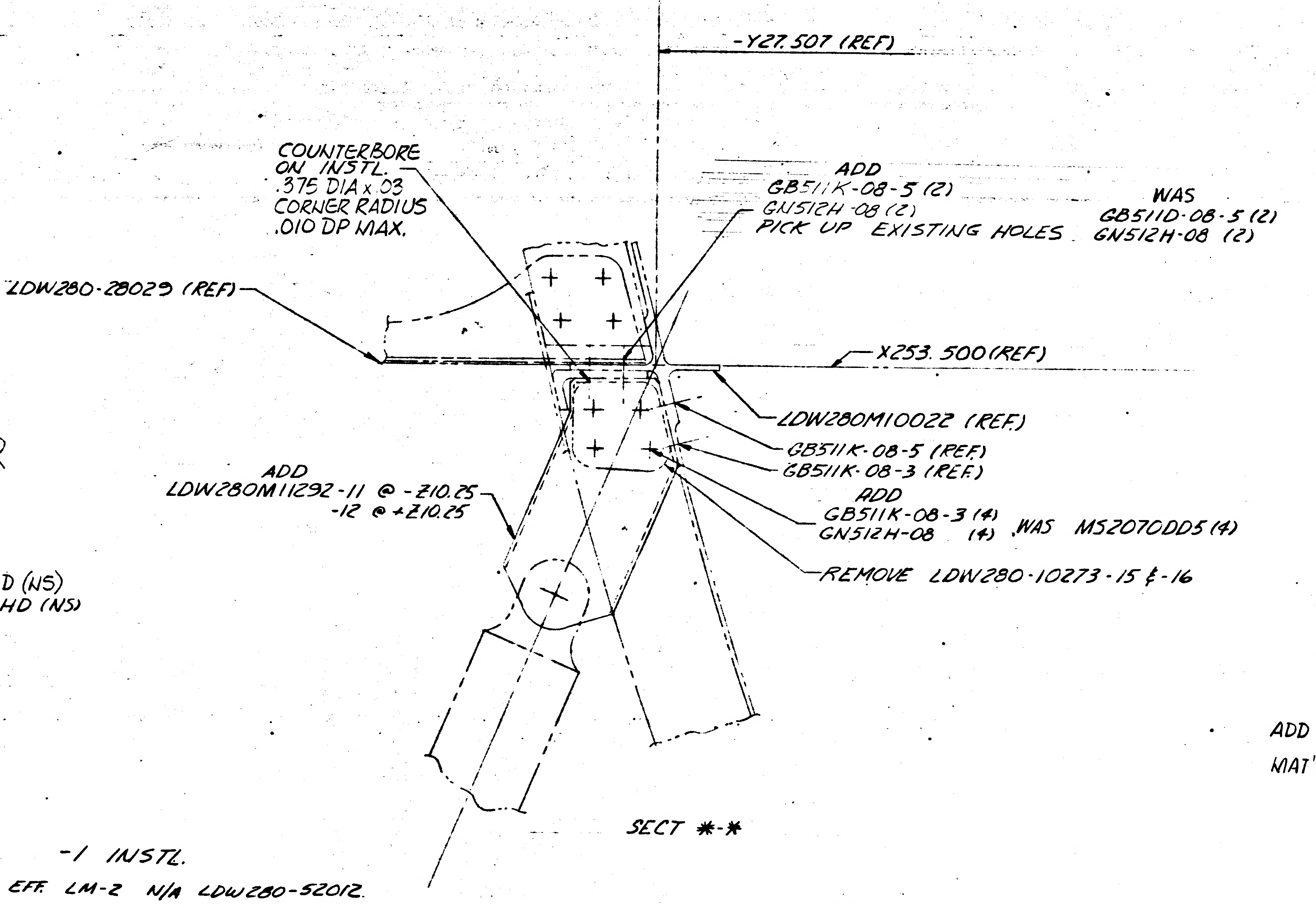

-Y27.507 (REF)
COUNTERBORE ON INSTL. .375 DIA x .03 CORNER RADIUS .010 DP MAX.
ADD
GB511K-08-5 (2)
GN512H-08 (2)
PICK UP EXISTING HOLES
WAS
GB511D-08-5 (2)
GN512H-08 (2)
LDW280-28029 (REF)
X253.500 (REF)
LDW280M10022 (REF)
GB511K-08-5 (REF)
GB511K-08-3 (REF)
ADD
LDW280M11292-11 @ -Z10.25
-12 @ +Z10.25
ADD
GB511K-08-3 (4)
GN512H-08 (4)
WAS MS20470DD5 (4)
REMOVE LDW280-10273-15 & -16
SECT *-*

-1 INSTL.

EFF. LM-2 N/A LDW280-52012.

ADD NOTE * (USING NEXT AVAILABLE NO.)
MAT'L TO BE 2024-T3 BARE QQ-A-250/4, FIN 7C.

AREA SH SIZE 1/4 FULL SIZE 8.8 SQ FT

FITH

DETAIL SPEC REQD		CLASS II ENGRG CHG ✓	CLASS I ENGRG CHG	LCD 19-1244	CONTROL INFO NO. LDW280A6560

REASON FOR EO: INCREASED FITH LOADS

DESCRIPTION OF EO:
FOR -1
ADDED LDW280M11292-11 & -12, GB511K-08 (8), GN512H-08 (8)
GS570P-08 (2), GW106-2 (2), ADDED NOTE *
REMOVED LDW280-10273-15, & -16, MS20470DD5 (4), GB511D-08 (2)
GN512H-08 (2) ADDED .375 D C'BORE

GRUMMAN EO RELEASE: JK 4/25/67

MODEL	PROCURING ACT. NO.	GAEC UNIT NO.	SUB CONTR UNIT NO.
LM		LM-2 (32)	

DRAWING REVISION REQD		DISPOSITION OF PARTS		BY	SUPPORT	RELIAB GROUP	GROUP LEADER	STRESS GROUP	LIAISON ENGRG	PROJ ENGR	
REVISE DWG ✓	RECORD EO	REWORK ✓	SCRAP	4/24/67 5 VDI			F.N.R. 4/24/67			Cam 4/24/67	

PRIORITY: C

DRAWING TITLE: MID SECTION SUB ASSY ASCENT STAGE

ENGINEERING ORDER
DRAWING NO. LDW280-52020
EO NO. J3

X 7033
ISSUED BY P.P. OBERNDORFER SECTION VDI GROUP NO. 335 PL 25
CODE IDENT NO. 26512
GRUMMAN AIRCRAFT ENGINEERING CORP
BETHPAGE, L. I., N. Y.

01 NAS 9-1100

ENG 32.2 REV 3-65

GRUMMAN AIRCRAFT ENGINEERING CORP.
CODE IDENT NO. 26512
ENGINEERING ORDER

DWG. NO. LDW280-52020
EO NO. J4
CONTROL INFO NO. LM-5-13265

THIS IS A REVISION
OF EO J3

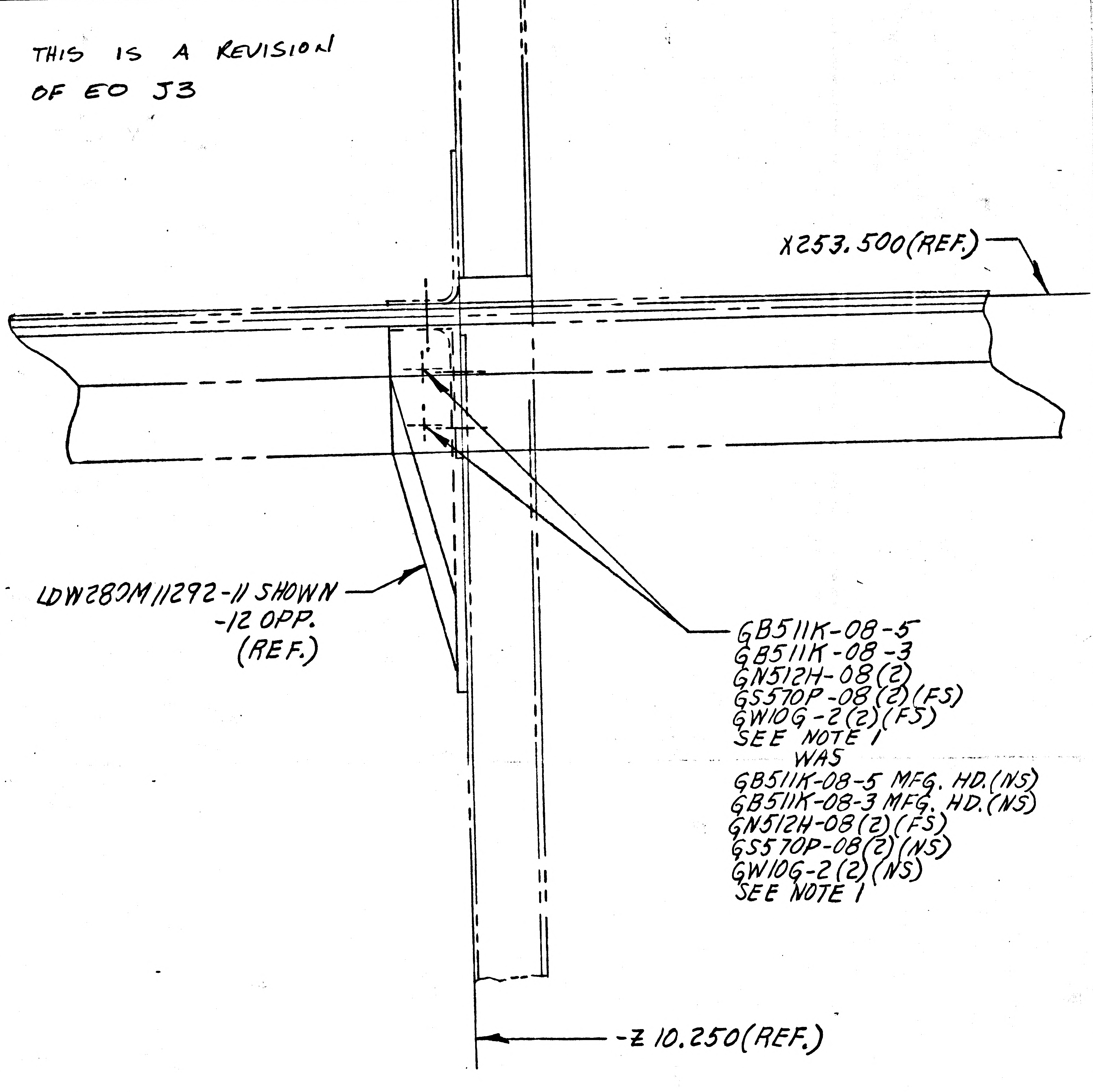
X253.500(REF.)
LDW280M11292-11 SHOWN
-12 OPP.
(REF.)
GB511K-08-5
GB511K-08-3
GN512H-08(2)
GS570P-08(2)(FS)
GW10G-2(2)(FS)
SEE NOTE 1
WAS
GB511K-08-5 MFG. HD.(NS)
GB511K-08-3 MFG. HD.(NS)
GN512H-08(2)(FS)
GS570P-08(2)(NS)
GW10G-2(2)(NS)
SEE NOTE 1
-Z 10.250(REF.)

LDW280-52020 -1 INSTL.
VIEW LOOKING INBD.
LEFT HAND SIDE
-Z 10.250 (SHOWN)
+Z 10.250 (OPP.)

RELEASED BY LIAISON

REF. E.O. J3

DETAIL SPEC REQ ☐ CL II ENGRG CHG ☑ CL I ENGRG CHG ☐ LCD -1244 5

REASON FOR EO: TO PUT SEAL & WASHER ON PROPER SIDE OF FASTENER

DESCRIPTION OF EO: REF EO J3
ON -1, GB511K-08-5(2) WAS MFG. HD. (NS), GB511K-08-3(2) WAS MFG. HD. (NS), GN512H-08(4) WAS (FS), GS570P-08(4)(FS) WAS (NS) & GW10G-2(4)(FS) WAS (NS).

GAEC EO RELEASE: C

MODEL	EFFECTIVITY: PROCURING ACTIVITY NO.	GAEC UNIT NO.	SUB CONTR UNIT NO.
LM		LM-2 (32)	

DRAWING CHANGE REQD: REVISE DWG ☑ RECORD EO ☐
DISPOSITION OF PARTS: REWORK ☑ SCRAP ☐

		SUPPORT	RELIAB. GROUP	GROUP LEADER	STRESS GROUP	LIAISON ENGRG	PROJ ENGRG
APPROVED BY	WT			~		EWB	DAM
DATE	4/27/67			~	4-28	4/28/67	5-2-67
1	VDI						

4/28/67

PRIORITY: C
DRAWING TITLE: MID SECTION SUB ASSEMBLY ASCENT STAGE
DRAWING NO. LDW280-52020
EO NO. J4

ISSUED BY F. STEINMETZ X6510 SECTION VDI GROUP NO. 335 PL. 5

01
NAS 9-1100

ENG 32.1 REV 3-66

GRUMMAN AIRCRAFT ENGINEERING CORP.
CODE IDENT NO. 26512
ENGINEERING ORDER

*

DWG. NO.	LDW280-52020	EO NO.	J5
CONTROL INFO NO.	LM5-13294		

ON-1 ASSY IN F/D & B/M

ADD LDW280-51297-3

REMOVE LDW280-51297-1

RELEASED BY LIAISON

DETAIL SPEC REQ	☐	CL II ENGRG CHG	✓	CL I ENGRG CHG	☐	LCD - 1552

REASON FOR EO
TO REMOVE PHYSICAL HAZARDS
FROM THE CREW COMPARTMENT

DESCRIPTION OF EO
ON-1
ADD LDW280-51297-3
REMOVE LDW280-51297-1

GAEC EO RELEASE
JK

APPROVED BY	WT			~			DAM	
DATE	5/17/67			~	5/17/67	5-18-67	5-24-67	5/18/67
1	VDI	SUPPORT	RELIAB. GROUP	GROUP LEADER	STRESS GROUP	LIAISON ENGRG	PROJ ENGRG	

MODEL	EFFECTIVITY			DRAWING CHANGE REQD		DISPOSITION OF PARTS	
	PROCURING ACTIVITY NO.	GAEC UNIT NO.	SUB CONTR UNIT NO.	✓ REVISE DWG	RECORD EO	✓ REWORK	SCRAP
LM		LM-2(32)					

PRIORITY	DRAWING TITLE	DRAWING NO.	EO NO.
C	SUBASSEMBLY ASCENT STAGE ~ MID-SECTION	LDW280-52020	J5

ISSUED BY W. TRAUT x6510 SECTION VDI GROUP NO. 335 PL. 5

01 NAS 9-1100

ENG 32.1 REV 3-65

B

GRUMMAN AIRCRAFT ENGINEERING CORP.
CODE IDENT NO. 26512
ENGINEERING ORDER

DWG. NO. LDW280-52020
EO NO. 56
CONTROL INFO NO LDW280A-7009

REMOVE LDW280M10001-1 FROM -3 & REPLACE IT WITH LDW280M10001-3

DETAIL SPEC REQ	☐	CL II ENGRG CHG	✓	CL I ENGRG CHG	☐ LCD-1552

5

REASON FOR EO: REMOVAL OF PHYSICAL HAZARDS FROM CREW COMPARTMENT

DESCRIPTION OF EO: REMOVED LDW280M10001-1 FROM -3 & REPLACED IT WITH LDW280M10001-3

MODEL	EFFECTIVITY: PROCURING ACTIVITY NO	EFFECTIVITY: GAEC UNIT NO	EFFECTIVITY: SUB CONTR UNIT NO
LM		LM-2(32)	

DRAWING CHANGE REQD: REVISE DWG	DRAWING CHANGE REQD: RECORD EO	DISPOSITION OF PARTS: REWORK	DISPOSITION OF PARTS: SCRAP
✓		✓	

	VDI	SUPPORT	RELIAB GROUP	GROUP LEADER	STRESS GROUP	LIAISON ENGRG	PROJ ENGRG	Ⓡ GAEC EO RELEASE
APPROVED BY	WT			~	mgm		Dam	JK
DATE	5/23/67			~	5/24/67		5/25/67	5/29/67
1								

PRIORITY	DRAWING TITLE	DRAWING NO	EO NO
C	MID SECTION SUB ASSEMBLY ASCENT STAGE	LDW280-52020	56

ISSUED BY ART WILSON X6510 SECTION VDI GROUP NO. 335 PL 5

01 NAS 9-1100

ENG 32.1 REV 3-65

B

GRUMMAN AIRCRAFT ENGINEERING CORP.
CODE IDENT NO. 26512
ENGINEERING ORDER

DWG. NO. LDW 280-52020
EO NO. 57
CONTROL INFO NO. LDW 280 A-7373

IN B/M & F/D ADD LDW 280-52920 -1 (1 REQ'D) TO -1 INST'L

DETAIL SPEC REQ		CL II ENGRG CHG	✓	CL I ENGRG CHG		LCD # 1516

5

REASON FOR EO: ADDITION OF SURGE TANK PER LCD #1516

DESCRIPTION OF EO: ON -1, ADDED LDW 280-52920 -1

Ⓡ GAEC EO RELEASE C
JK 6/20/67

MODEL	EFFECTIVITY		
	~~PROCURING ACTIVITY NO.~~	GAEC UNIT NO.	~~SUB CONTR UNIT NO.~~
LM	LM-2 (32)		

DRAWING CHANGE REQD		DISPOSITION OF PARTS	
✓		✓	
REVISE DWG	RECORD EO	REWORK	SCRAP

APPROVED BY	Jef			F.Dk	JV		Dam	JPf
DATE	6/8/67			6/7/67	6/19		6/19/67	6/20/67
5	V.D.I.	SUPPORT	RELIAB. GROUP	GROUP LEADER	STRESS GROUP	LIAISON ENGRG	PROJ ENGRG	~~CONT~~

PRIORITY	DRAWING TITLE	DRAWING NO.	EO NO.
C	MID SECTION SUB ASSEMBLY ASCENT STAGE	LDW 280-52020	57

ISSUED BY Geo. W. Rocklein x7033 6/6/67 SECTION Veh. Des. Int. GROUP NO. 335 PL 25

01

NAS 9-1100

ENG 32.1 REV 3-65

GRUMMAN AIRCRAFT ENGINEERING CORP.
CODE IDENT NO. 26512
ENGINEERING ORDER

*

DWG. NO. LDW280-52020
EO NO. J8
CONTROL INFO NO. LDW280A-7581

IN F/D REMOVE NOTE #17
(REMOVE REFERENCE IN F/D TO THIS NOTE.)

REWORK INFO: AREAS WHICH ALREADY HAVE RTV731 APPLIED AS PER NOTE 17 ARE ACCEPTABLE SINCE THEY ARE COVERED BY LDW340P10947 TREVARNO CHANNELS.

DETAIL SPEC REQ ☐ CL II ENGRG CHG ☐ CL I ENGRG CHG ☑ CCA 578 LCD 1436 5

REASON FOR EO: TO ELIMINATE THE USE OF RTV 731 IN CREW COMPARTMENT

DESCRIPTION OF EO: REMOVED NOTE 17.

GAEC EO RELEASE: C JK 6/20/67

MODEL	PROCURING ACTIVITY NO.	GAEC UNIT NO.	SUB CONTR UNIT NO.
LM	LM-2	(32)	

DRAWING CHANGE REQD: REVISE DWG ✓ RECORD EO
DISPOSITION OF PARTS: REWORK NOT REQD SCRAP

APPROVED BY								
DATE	6/20/67	6-19-67		6/20/67	—		6/20/67	6-20-67
	VDI	MATC SUPPORT ENGR	RELIAB. GROUP	GROUP LEADER	STRESS GROUP	LIAISON ENGRG	PROJ ENGRG	

PRIORITY: C
DRAWING TITLE: MID SECT SUB ASSY ASCENT STAGE
DRAWING NO.: LDW280-52020
EO NO.: J8

ISSUED BY E. STAHL X7033 SECTION V.D.I. GROUP NO. 335 PL 25

01

NAS 9-1100

ENG 32.1 REV 3-65

GRUMMAN AIRCRAFT ENGINEERING CORP.
CODE IDENT NO. 26512
ENGINEERING ORDER

DWG. NO. LDW 280-52020		EO NO. J9
CONTROL INFO NO. LDW 280B-0494		

ON -1:

LDW 280-52920-3 WAS LDW 280-52920-1

DETAIL SPEC REQ	☐	CL II ENGRG CHG	☐	CL I ENGRG CHG	✓	LCD # 2223 CCA 745 (5)

REASON FOR EO	DESCRIPTION OF EO	GAEC EO RELEASE
UNMANNED LM-2	ON -1: LDW280-52920-3 WAS LDW 280-52920-1	JK 12/12/7

MODEL	~~PROCURING ACTIVITY NO.~~	GAEC UNIT NO.	~~SUB CONTR UNIT NO.~~
LM		LM-2 (32)	

DRAWING CHANGE REQD		DISPOSITION OF PARTS		APPROVED BY								
✓		✓		DATE	12/8/67			12-7-67	12-10		12/8/67	12-12-67
REVISE DWG	RECORD EO	REWORK	SCRAP	R	VDI	SUPPORT	RELIAB. GROUP	GROUP LEADER	STRESS GROUP	LIAISON ENGRG	PROJ ENGRG	GOVT

Botti

PRIORITY	DRAWING TITLE	DRAWING NO.	EO NO.
C	MID SECTION-SUB ASSEMBLY, A/S	LDW 280-52020	J9

12-14
ISSUED BY Geo. W. Rockleim x7033 11/22/67 SECTION Veh. Des. Int. GROUP NO. 335 PL 25

01 NAS 9-1100

MODEL OR END ITEM	NEXT ASSY	MODULE OR SER NO.	REQD PER MODULE OR END ITEM	MODEL OR END ITEM	NEXT ASSY	MODULE OR SER NO.	REQD PER MODULE OR END ITEM	MODEL OR END ITEM	NEXT ASSY	MODULE OR SER NO.	REQD PER MODULE OR END ITEM
								LEM	LDW280-52017	LEM-2(32)	1
PART NO.		GAEC SCH NO.		PART NO.		GAEC SCH NO.		PART NO. LDW280-52022-1		GAEC SCH NO. 32-7	

(3)

SH REV STATUS: FOR DESCRIPTION OF REV SEE SUBQ SH

SHEET	1	1.10	2	3					
REV	A	A	A	A					
SHEET									
REV									
SHEET									
REV									

LAST SECT LTR USED

LAST DASH NO. USED -1

GRUMMAN REL INFO

PRIM NO.	VE(001)		
215	PP 12		

UNLESS OTHERWISE SPECIFIED DIMENSIONS ARE IN INCHES.
TOLERANCE UNLESS SPECIFIED
FRACTIONS - DECIMALS - ANGLES
±1/32 ±.020 ±1/2°

ORIG DWG AUTH
DETAIL SPEC REQUIREMENT
CLASS II ENGRG CHANGE
CLASS I ENGRG CHANGE

CONTRACT NO. NAS 9-1100
LINE ITEM #1
DOCUMENTATION TYPE II

DRAWN BY	D'AGOSTO 10-11-65	~~RELIABILITY~~	—
LAYOUT BY	HARRIGAN		
CHECKED BY	11-12-65 WCG		
GP. LEADER	12/65		
VEH DES INT	12/14		
STRUCTURES	GW 12-14	PROJ ENGR	11/7
STRUCTURES	Hilderman 12-15	REL GROUP	Lippincott 12/18
WEIGHTS	S Rohesch 12-15		

GRUMMAN AIRCRAFT ENGRG CORP
BETHPAGE, L. I., NEW YORK

TUNNEL ASSEMBLY
ASCENT STAGE-MID SECTION-DOCKING

SIZE B
CODE IDENT NO. 26512
LDW280-52022
A
SCALE NONE
SHEET 1 OF 4

ENG 77.1 9-64

01

NAS 9-1100

REVISIONS

CHANGE LTR	ITEM NO.	SHEET NO.	ZONE	SH CHG LTR	GRUMMAN INFO ONLY	DET SPEC	CLASS I	CLASS II	ENGRG ORDER	DESCRIPTION	EFFECTIVITY	DISPOSITION OF EXISTING PARTS		CHANGED BY AND DATE	ENGRG APPD	APPD
												REWORK	SCRAP			
A	1	1,1.10,2 & 3							EO A1	INITIAL DRAWING RELEASE. PARTS MADE PER E.O.	NOTED	NOT	REQ'D	D'AGOSTO 10-11-65	"	
	2	1 & 1.10								IN MODEL BLOCK REMOVED LEM-3 EFF. FOR -1			-1	WCG		

FOR CONTINUATION OF REVISIONS SEE SHEET

ENG 77.3 5-64

GRUMMAN AIRCRAFT ENGRG CORP, BETHPAGE, L. I., NEW YORK			
SIZE B	CODE IDENT NO. 26512	LDW280-52022	A
SCALE NONE			SHEET 1.10

01

NAS 9-1100

QTY PER ASSEMBLY							CODE IDENT	PART NO.	I&T	NOMENCLATURE OR DESCRIPTION	MATERIAL	GOVT SPEC	COML SPEC	STOCK SIZE	PROCESS SYM	FINISH NO.	ZONE
						1		LDW280M10020-3	E	RING	SEE DWG						
						1		LDW280-10110-7	E	SKIN	SEE DWG						
								LDW280-52022-1	E	TUNNEL ASSY (WELDED)					NOTE 2	NOTE 4	
						-1											

SYM OR NO.	PROCESS OR FINISH	GRUMMAN SPEC OR MILITARY SPEC	SYM OR NO.	PROCESS OR FINISH	GRUMMAN SPEC OR MILITARY SPEC	SYM OR NO.	PROCESS OR FINISH	GRUMMAN SPEC OR MILITARY SPEC
						76	ALODINE	LSP14-9010

I & T: IDENTIFICATION AND TRACEABILITY IN ACCORDANCE WITH : NONE

GRUMMAN AIRCRAFT ENGRG CORP, BETHPAGE, L. I., NEW YORK

SIZE	CODE IDENT NO.		
B	26512	LDW280-52022	A
SCALE NONE		SHEET 2	

ENG 77.2 7-65

01

NAS 9-1100

NOTES:
1. DO NOT BREAK
2. MECHANIZED FUS
LSP 14-620() & INS
AREA ADJACENT
3. GRIND WELD FLUS
4. BRUSH ALODINE S
5. UPON INITIAL REL
TO LDW28()-2302

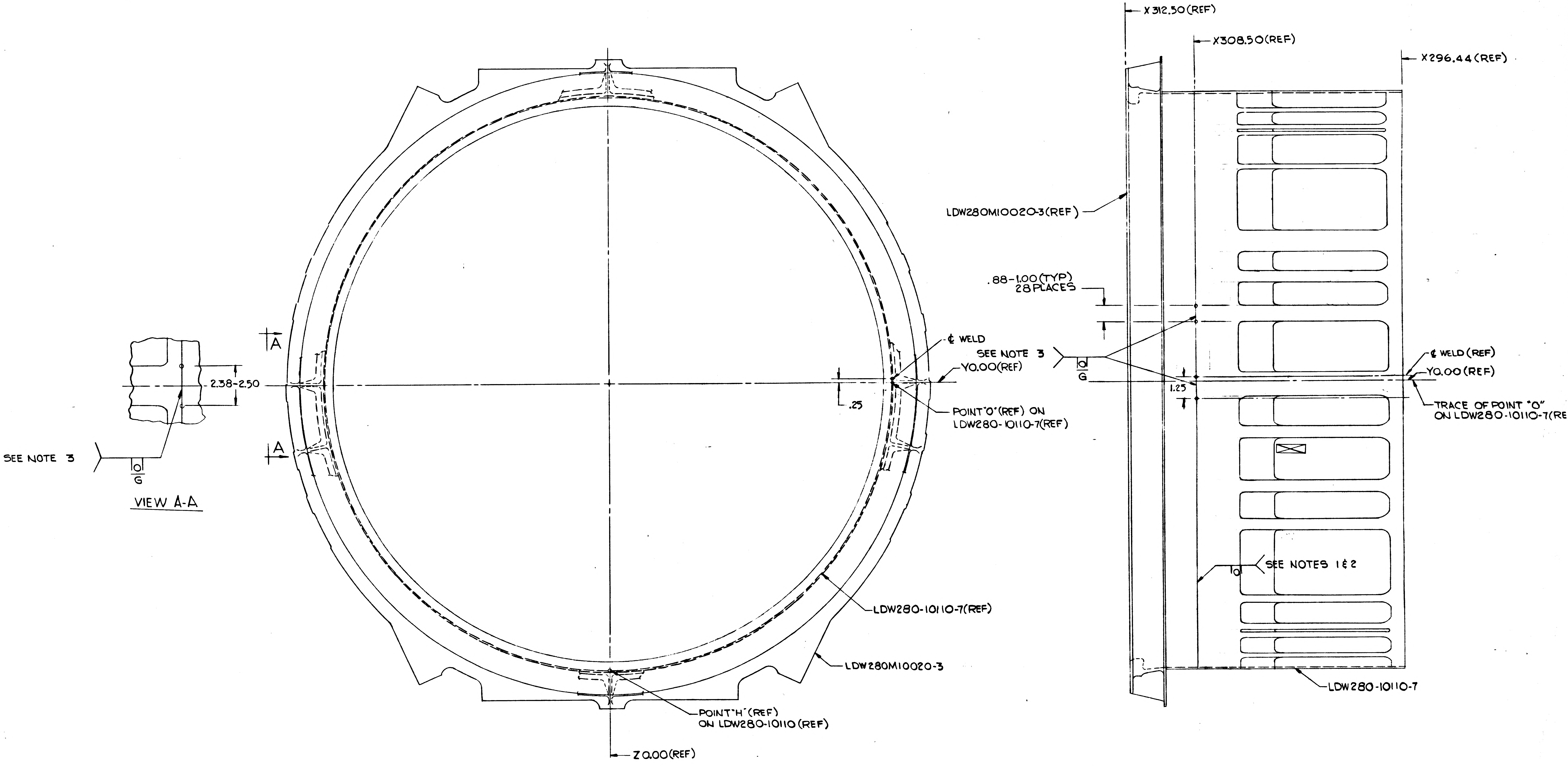
X312.50 (REF)
X308.50 (REF)
X296.44 (REF)
LDW280M10020-3 (REF)
.88-1.00 (TYP) 28 PLACES
¢ WELD
SEE NOTE 3
G
Y0.00 (REF)
.25
POINT "O" (REF) ON LDW280-10110-7 (REF)
¢ WELD (REF)
Y0.00 (REF)
1.25
TRACE OF POINT "O" ON LDW280-10110-7 (REF)
A
A
2.38-2.50
SEE NOTE 3
G
VIEW A-A
SEE NOTES 1 & 2
LDW280-10110-7 (REF)
LDW280M10020-3
LDW280-10110-7
POINT "H" (REF) ON LDW280-10110 (REF)
Z0.00 (REF)

LDW280-52022-1 ASSY (WELDED)

01/02

2/2

CODE IDENT 26512
LDW280-52022 SH 3

NAS 9-1100

NOTES:
1. DO NOT BREAK SHARP EDGES
2. MECHANIZED FUSION WELD PER GRUMMAN SPEC. LSP 14-6201 & INSPECT PER STANDARD II. ANNEALED AREA ADJACENT TO WELD IS PERMISSIBLE
3. GRIND WELD FLUSH ($^{+.010}_{-.000}$) IN THIS AREA N.S. 125
4. BRUSH ALODINE SCRAPED AREA AFTER WELDING
5. UPON INITIAL RELEASE, LDW280-52022-1 IS SIMILAR TO LDW280-23022-1

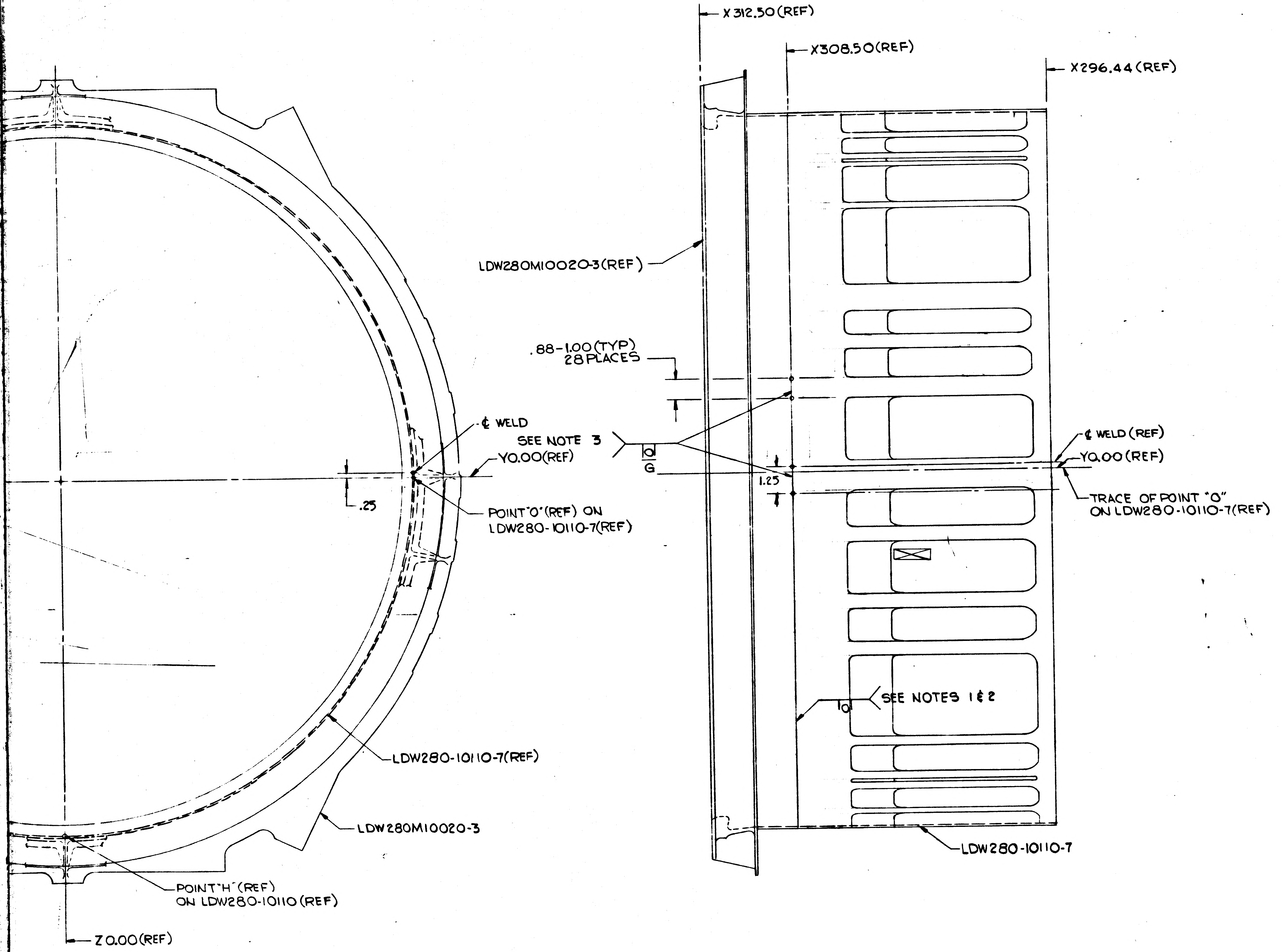
X 312.50 (REF)
X308.50 (REF)
X296.44 (REF)
LDW280M10020-3 (REF)
.88-1.00 (TYP) 28 PLACES
℄ WELD
SEE NOTE 3
YO.00 (REF)
G
1.25
.25
POINT "O" (REF) ON LDW280-10110-7 (REF)
℄ WELD (REF)
YO.00 (REF)
TRACE OF POINT "O" ON LDW280-10110-7 (REF)
SEE NOTES 1 & 2
LDW280-10110-7 (REF)
LDW280M10020-3
LDW280-10110-7
POINT "H" (REF) ON LDW280-10110 (REF)
Z0.00 (REF)

LDW280-52022-1 ASSY (WELDED)

102/012

MANUFACTURING OPERATIONS UNLESS OTHERWISE SPECIFIED NOTES CHECKED √ APPLY TO THIS DWG.	
RUBBER STAMP PART NUMBER AND ALL OTHER MARKINGS IN REGION MARKED ☒ USE BOTH SIDES IF NECESSARY.	✓
FILLET AND INSIDE CORNER RADII TOLERANCES .016R TO .062R ± .010 .063R TO .250R ± .015 OVER .250R ± .030	
DEPTH SHOWN FOR TAPPED HOLES IS FULL THDS. 2-3 IMP THDS. BEYOND PERMISSIBLE.	
EXTERNAL THREAD LENGTH SHOWN INCLUDES 2 IMPERFECT THREADS MAX.	
DO NOT CADMIUM PLATE & PAINT HOLES OR SURFACES MARKED WITH DOUBLE ASTERISK.	
MISMATCH STEP OF ± .005 PERMISSIBLE DUE TO CHANGE OF CUTTERS AT INSIDE INTERSECTING SURFACES.	
DIAMETERS MARKED MUST BE CONCENTRIC WITHIN FULL INDICATOR READING	
HOLES MUST BE KEPT FREE OF CHROME PLATING SOLUTION.	
ALL DIMENSIONS SHOWN TO BE MET AFTER CADMIUM PLATING. THICKNESS OF PLATE .0003 MIN. TO .0005 MAX. MIN. THICKNESS TO BE .0002 ON THREADED AREAS. NO ALLOWANCE FOR PLATING IN HOLES	
125 SURFACE ROUGHNESS INCLUDING REAMED HOLES PER MIL-STD-10	
200 FOR ALL DRILLED HOLES	
REMOVE ALL BURRS. BREAK ALL EDGES .015-.031	
INSPECTION INFORMATION MINIMUM PERMISSIBLE AVERAGE EDGE DISTANCE MARKED IS	
SYMBOL √ DENOTES SURFACE TO BE MACHINED	
UNLESS OTHERWISE SPECIFIED TOLERANCE ON FLANGES IS ± 1/32	
LENGTHS OF AN, NAS & MS AL ALY RIVETS SHORTER THAN 1 INCH ARE NOT SPECIFIED.	
TOLERANCE ON LOFTED DELINEATIONS IS	

DWG SIZE 34 X 65

PRINTING INFO ONLY
FULL SIZE SHEET AREA (36 X 67) = 16.75 SQ. FT.
1/2 SIZE SHEET AREA (1/4 OF FULL) = 4.18 SQ. FT.

PRINT TRIM LINE

LDW280-52022 A

LDW280-52022 A

CODE IDENT 26512
LDW280-52022 SH 3

	GRUMMAN AIRCRAFT ENGRG CORP., BETHPAGE, L. I., NEW YORK			
LEM	SIZE J	CODE IDENT NO. 26512	LDW280-52022	A
MODEL OR END ITEM	SCALE HALF		SHEET 3	

NAS 9-1100

MODEL OR END ITEM	NEXT ASSY	MODULE OR SER NO.	REQD PER MODULE OR END ITEM	MODEL OR END ITEM	NEXT ASSY	MODULE OR SER NO.	REQD PER MODULE OR END ITEM	MODEL OR END ITEM	NEXT ASSY	MODULE OR SER NO.	REQD PER MODULE OR END ITEM
								LEM	LDW280-52020	LEM-2(32)	1 EA
PART NO.		GAEC SCH NO.		PART NO.		GAEC SCH NO.		PART NO. LDW280-52041-1 & -3		GAEC SCH NO. 32.5	

(3)

SH REV STATUS: FOR DESCRIPTION OF REV SEE SUBQ SH

SHEET	1.00	1.10	2.00	3.00					
REV	A	A	A	A					
SHEET									
REV									
SHEET									
REV									

LAST SECT LTR USED		GRUMMAN REL INFO	
LAST DASH NO. USED	-3	PRIM NO. (001)	
		215	PP/10

UNLESS OTHERWISE SPECIFIED DIMENSIONS ARE IN INCHES.
TOLERANCE UNLESS SPECIFIED
FRACTIONS - DECIMALS - ANGLES
±1/16 ±.032 ±½°
ORIG DWG AUTH
DETAIL SPEC REQUIREMENT
CLASS II ENGRG CHANGE
CLASS I ENGRG CHANGE

CONTRACT NO. NAS9-1100
LINE ITEM #1
DOCUMENTATION TYPE II

DRAWN BY	P.SCHELL 19 OCT 65	RELIABILITY	
LAYOUT BY	WHISTON GWW		
CHECKED BY	WCG 10/27/65		
GR LEADER	11/15/65		
VEH DES INT	11/17		
STRUCTURES	ED GW 11-16	PROJ ENGR	11/19
STRUCTURES	Hilderman 11-17	REL GROUP	
WEIGHTS	11-18		

GRUMMAN AIRCRAFT ENGRG CORP
BETHPAGE, L. I., NEW YORK

SKIN-DECK ASSY
ASCENT STAGE - MID-SECT
UPPER & LOWER

SIZE	CODE IDENT NO.		
B	26512	LDW280-52041	A
SCALE NONE		SHEET 1.00 OF 4	

ENG 77.1 9-64

01

NAS 9-1100

REVISIONS

CHANGE LTR	ITEM NO.	SHEET NO.	ZONE	SH CHG LTR	GRUMMAN INFO ONLY	DET SPEC	CLASS I	CLASS II	ENGRG ORDER	DESCRIPTION	EFFECTIVITY	DISPOSITION OF EXISTING PARTS REWORK	DISPOSITION OF EXISTING PARTS SCRAP	CHANGED BY AND DATE	ENGRG APPD	[illegible] APPD
A	1	1,2 & 3		A		✓				E.O. A1, INITIAL DWG RELEASE, PARTS MADE AS PER E.O.	NOTED	NOT	REQ'D	P. SCHELL 19 OCTOBER 1965	☒	☒
	2	1, 1.10		A						FOR -1 & -3 REMOVED LEM-3, N/A LDW280-52020 WAS LDW280-52012	NOTED		-1 -3			

FOR CONTINUATION OF REVISIONS SEE SHEET

ENG 77.3 5-64

GRUMMAN AIRCRAFT ENGRG CORP, BETHPAGE, L. I., NEW YORK

SIZE	CODE IDENT NO.		
B	26512	LDW280-52041	A
SCALE NONE		SHEET 1.10	

01

NAS 9-1100

QTY PER ASSEMBLY -3	QTY PER ASSEMBLY -1	CODE IDENT	PART NO.	I&T	NOMENCLATURE OR DESCRIPTION	MATERIAL	GOVT SPEC	COML SPEC	STOCK SIZE	PROCESS SYM	FINISH NO.	ZONE
1			LDW280M10003-3	E	DECK-LOWER	SEE DWG						
	1		LDW280-52017-1		DECK ASSY							
1			LDW280-52014-6		SKIN ASSY							
1			-5		SKIN ASSY							
	1		-3		SKIN ASSY							
	1		LDW280-52014-1		SKIN ASSY	SEE DWG						
			LDW280-52041-3		SKIN DECK ASSY-WELDED					NOTE 1	NOTE 4	
			LDW280-52041-1	E	SKIN DECK ASSY-WELDED					NOTE 1	NOTE 4	

SYM OR NO.	PROCESS OR FINISH	GRUMMAN SPEC OR MILITARY SPEC	SYM OR NO.	PROCESS OR FINISH	GRUMMAN SPEC OR MILITARY SPEC	SYM OR NO.	PROCESS OR FINISH	GRUMMAN SPEC OR MILITARY SPEC
						76	ALODINE	LSP14-9.010

I & T: IDENTIFICATION AND TRACEABILITY IN ACCORDANCE WITH :
NONE

GRUMMAN AIRCRAFT ENGRG CORP, BETHPAGE, L. I., NEW YORK

SIZE	CODE IDENT NO.		
B	26512	LDW280-52041	A
SCALE NONE		SHEET 2	

ENG 77.2 7-65

01

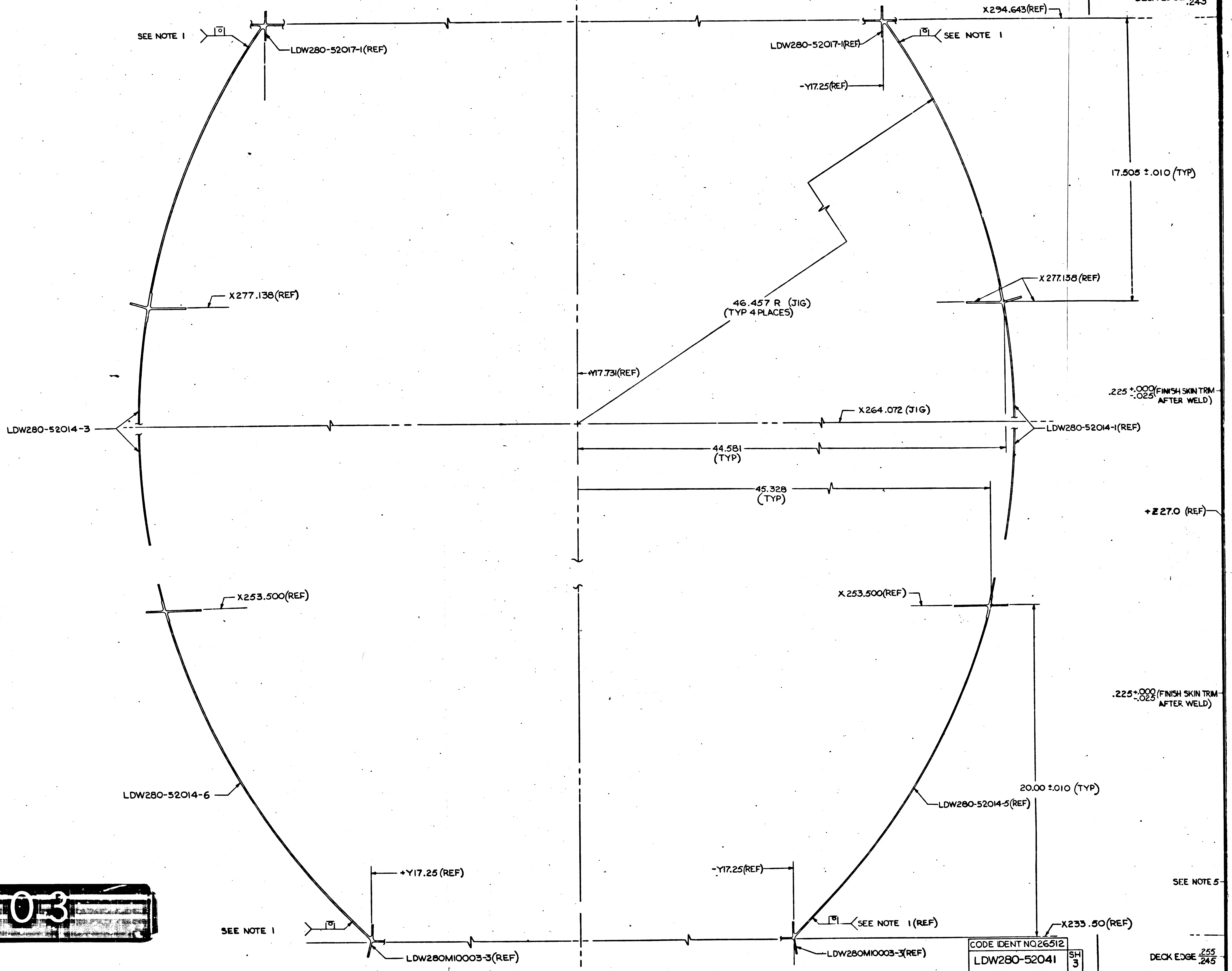

SEE NOTE 1
LDW280-52017-1(REF)
LDW280-52017-1(REF)
SEE NOTE 1
X294.643(REF)
DECK EDGE .255/.245
-Y17.25(REF)
17.505 ±.010 (TYP)
X277.138(REF)
X277.138(REF)
46.457 R (JIG)
(TYP 4 PLACES)
+Y17.731(REF)
.225 +.000/-.025 (FINISH SKIN TRIM AFTER WELD)
LDW280-52014-3
X264.072 (JIG)
LDW280-52014-1(REF)
44.581
(TYP)
45.328
(TYP)
+Z27.0 (REF)
X253.500(REF)
X253.500(REF)
.225 +.000/-.025 (FINISH SKIN TRIM AFTER WELD)
LDW280-52014-6
20.00 ±.010 (TYP)
LDW280-52014-5(REF)
+Y17.25 (REF)
-Y17.25(REF)
SEE NOTE 5
SEE NOTE 1
SEE NOTE 1 (REF)
X233.50(REF)
LDW280M10003-3(REF)
LDW280M10003-3(REF)
DECK EDGE .255/.245

CODE IDENT NO 26512
LDW280-52041 SH 3

NAS 9-1100

3/3

01/03

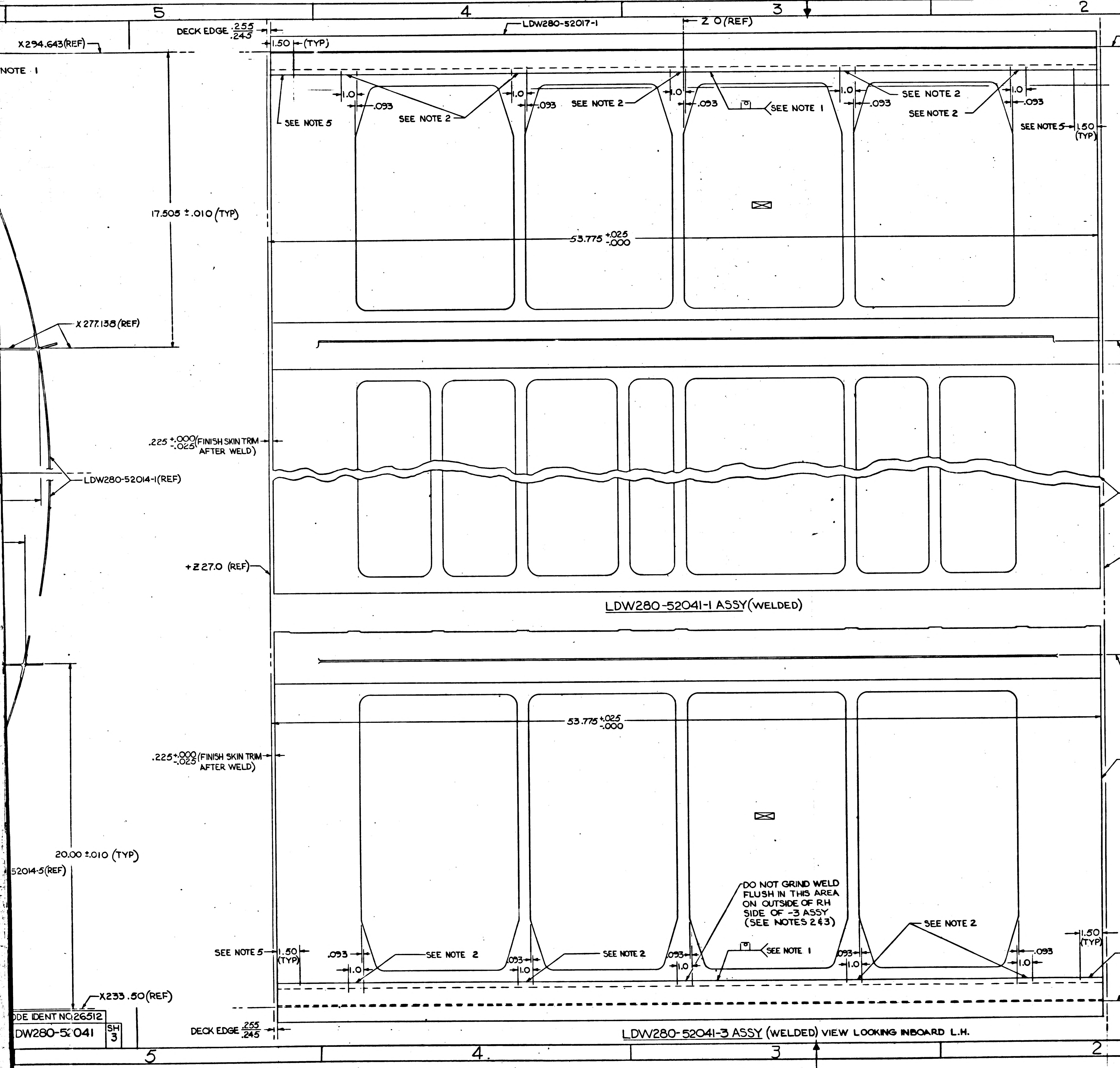
5
4
3
2
1
DECK EDGE .255/.245
LDW280-52017-1
Z 0 (REF)
X294.643(REF)
1.50 (TYP)
NOTE 1
1.0
.093
SEE NOTE 5
SEE NOTE 2
SEE NOTE 1
17.505 ±.010 (TYP)
53.775 +.025/-.000
X 277.138 (REF)
X277.138 (REF)
.225 +.000/-.025 (FINISH SKIN TRIM AFTER WELD)
LDW280-52014-1(REF)
LDW280-52014-1
+Z 27.0 (REF)
-Z 27.0 (REF)
LDW280-52041-1 ASSY (WELDED)
X253.500 (REF)
LDW280-52014-5
20.00 ±.010 (TYP)
52014-5(REF)
DO NOT GRIND WELD FLUSH IN THIS AREA ON OUTSIDE OF RH SIDE OF -3 ASSY (SEE NOTES 2 & 3)
LDW280M10003-3
X233.50(REF)
CODE IDENT NO.26512
LDW280-52041 SH 3
DECK EDGE .255/.245
LDW280-52041-3 ASSY (WELDED) VIEW LOOKING INBOARD L.H.

NOTES:

1- MECHANIZED FUSION WELD PER LSP14-6201 AND INSPECT PER STD II. ANNEALED AREA ADJACENT TO WELD PERMISSIBLE.
2- GRIND WELD FLUSH $\left(^{+.010}_{-.000}\right)$ 125√ IN THESE AREAS ALONG OUTSIDE CONTOUR 10 PLACES (TYP) ON -1 ASSY AND 9 PLACES (TYP) ON -3 ASSY.
3- GRIND WELD FLUSH $\left(^{+.010}_{-.000}\right)$ 125√ ALONG INSIDE CONTOUR OF LDW280-52014-6 ASSY AND LDW280M10003-3 ASSY ON -3 ASSY ONLY.
4- BRUSH ALODINE UNFINISHED AREA AFTER WELDING.
5- GRIND WELD FLUSH $\left(^{+.010}_{-.000}\right)$ 125√ IN THESE AREAS ALONG OUTSIDE CONTOUR 4 PLACES (TYP) ON -1 ASSY AND 4 PLACES (TYP) ON -3 ASSY.

02/03

CODE IDENT NO.26512
LDW280-52041 SH 3

LEM
MODEL OR END ITEM

GRUMMAN AIRCRAFT ENGRG CORP., BETHPAGE, L. I.

SIZE	CODE IDENT NO.	
J	26512	LDW280-520

SCALE HALF
SHEET

NAS 9-1100

THIS IS AN ORIGINAL DRAWING

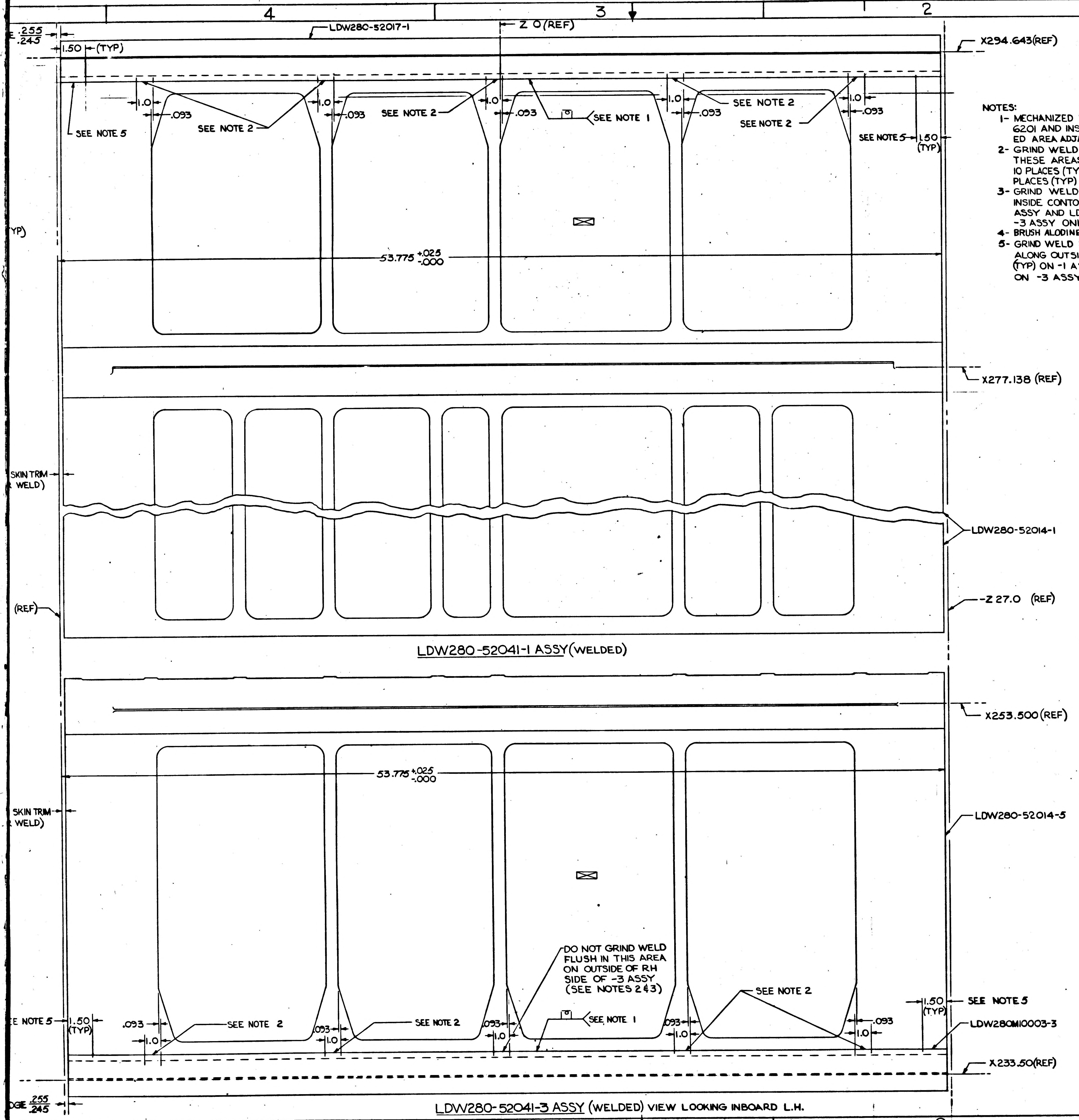

4
3
2
1
.255
.245
LDW280-52017-1
Z 0 (REF)
X294.643(REF)
1.50 (TYP)
1.0
.093
SEE NOTE 5
SEE NOTE 2
SEE NOTE 1
1.50 (TYP)
53.775 +.025 -.000
X277.138 (REF)
SKIN TRIM WELD)
LDW280-52014-1
Z 27.0 (REF)
(REF)
(TYP)
X253.500(REF)
LDW280-52014-5
DO NOT GRIND WELD FLUSH IN THIS AREA ON OUTSIDE OF RH SIDE OF -3 ASSY (SEE NOTES 2&3)
LDW280M10003-3
X233.50(REF)

LDW280-52041-1 ASSY (WELDED)

LDW280-52041-3 ASSY (WELDED) VIEW LOOKING INBOARD L.H.

NOTES:

1- MECHANIZED FUSION WELD PER LSP14-6201 AND INSPECT PER STD II. ANNEALED AREA ADJACENT TO WELD PERMISSIBLE.
2- GRIND WELD FLUSH $\left(^{+.010}_{-.000}\right)$ $\sqrt{125}$ IN THESE AREAS ALONG OUTSIDE CONTOUR 10 PLACES (TYP) ON -1 ASSY AND 9 PLACES (TYP) ON -3 ASSY.
3- GRIND WELD FLUSH $\left(^{+.010}_{-.000}\right)$ $\sqrt{125}$ ALONG INSIDE CONTOUR OF LDW280-52014-6 ASSY AND LDW280M10003-3 ASSY ON -3 ASSY ONLY.
4- BRUSH ALODINE UNFINISHED AREA AFTER WELDING.
5- GRIND WELD FLUSH $\left(^{+.010}_{-.000}\right)$ $\sqrt{125}$ IN THESE AREAS ALONG OUTSIDE CONTOUR 4 PLACES (TYP) ON -1 ASSY AND 4 PLACES (TYP) ON -3 ASSY.

03/03

MANUFACTURING OPERATIONS
UNLESS OTHERWISE SPECIFIED
NOTES CHECKED ✓ APPLY TO THIS DWG.

RUBBER STAMP PART NUMBER AND ALL OTHER MARKINGS IN REGION MARKED ⊠ USE BOTH SIDES IF NECESSARY.	✓
FILLET AND INSIDE CORNER RADII TOLERANCES .016R TO .062R ± .010 .063R TO .250R ± .015 OVER .250R ± .030	
DEPTH SHOWN FOR TAPPED HOLES IS FULL THDS. 2-3 IMP THDS. BEYOND PERMISSIBLE.	
EXTERNAL THREAD LENGTH SHOWN INCLUDES 2 IMPERFECT THREADS MAX.	
DO NOT CADMIUM PLATE & PAINT HOLES OR SURFACES MARKED WITH DOUBLE ASTERISK.	
MISMATCH STEP OF ± .005 PERMISSIBLE DUE TO CHANGE OF CUTTERS AT INSIDE INTERSECTING SURFACES.	
DIAMETERS MARKED MUST BE CONCENTRIC WITHIN FULL INDICATOR READING	
HOLES MUST BE KEPT FREE OF CHROME PLATING SOLUTION.	
ALL DIMENSIONS SHOWN TO BE MET AFTER CADMIUM PLATING. THICKNESS OF PLATE .0003 MIN. TO .0005 MAX. MIN. THICKNESS TO BE .0002 ON THREADED AREAS. NO ALLOWANCE FOR PLATING IN HOLES	
$\sqrt{125}$ SURFACE ROUGHNESS INCLUDING REAMED HOLES PER MIL-STD-10	
$\sqrt{200}$ FOR ALL DRILLED HOLES	
REMOVE ALL BURRS. BREAK ALL EDGES .015-.031	
INSPECTION INFORMATION MINIMUM PERMISSIBLE AVERAGE EDGE DISTANCE MARKED IS	
SYMBOL $\sqrt{}$ DENOTES SURFACE TO BE MACHINED	
UNLESS OTHERWISE SPECIFIED TOLERANCE ON FLANGES IS ± 1/32	
LENGTHS OF AN, NAS & MS AL ALY RIVETS SHORTER THAN 1 INCH ARE NOT SPECIFIED.	
TOLERANCE ON LOFTED DELINEATIONS IS	

DWG SIZE 34 X 94

PRINTING INFO ONLY
FULL SIZE SHEET AREA (36 X 96) = 24 SQ. FT.
1/2 SIZE SHEET AREA (1/4 OF FULL) = 6 SQ. FT.

PRINT TRIM LINE

C
B
A

LDW280-52041 A

LDW280-52041 A

LEM
MODEL OR END ITEM

CODE IDENT NO.26512
LDW280-52041 SH 3

GRUMMAN AIRCRAFT ENGRG CORP., BETHPAGE, L. I., NEW YORK

SIZE	CODE IDENT NO.		
J	26512	LDW280-52041	A
SCALE HALF		SHEET 3.00	

NAS 9-1100

REVISIONS

CHANGE LTR	ITEM NO.	SHEET NO.	ZONE	SH CHG LTR	GRUMMAN INFO ONLY	DET SPEC	CLASS I	CLASS II	ENGRG ORDER	DESCRIPTION	EFFECTIVITY	DISPOSITION OF EXISTING PARTS		CHANGED BY AND DATE	ENGRG APPD	GOVT APPD
												REWORK	SCRAP			
A	1	1.00 & 3.00							EO A1	INFIELD FOR-1 ASSY ADDED 3/8 DIA SPOTFACE, .030 COR R ON F.S. OF LDW280-28012 TO FLAT. ADDED SH 1.10, 2.04 & 5.00. SH 1.00 OF 10 WAS SH 1.00 OF 7	LEM-2	✓		ARATOLI 4-14-66		
	2	4.00							EO A2	ON-1 IN SECTION E-E & F-F HL 22-5-3 (HEAD F.S) WAS (HEAD N.S)						
	3								EO A3	SUPERSEDED BY EO A6	NOT REQD	NOT	REQD			
	4	2.04 & 3.00							EO A4	ON LDW280-52075-1 ASSY ADDED LDW280-28246-1 INSTL (1 REQ'D PER MOD)	LEM-2	✓				
	5	4.00							EO A5	IN FLD FOR-1 LDW280-10146-12 SHOWN -11 OPPOSITE WAS-11 SHOWN -12 OPPOSITE						
	6	2.03 2.04 & 5.00							EO A6	SUPERSEDES EO A3 ON LDW280-52075-1 ADDED DOUBLERS LDW280-10841 -11, -13, -15, -17 & -19 & LDW280M10706-1 & -2, LDW280M10705-1 & LDW280M10815-1 WITH ASSOCIATED HARDWARE IN F/D & IN B/M. ADDED DETAIL AA & SECTION AB-AB THRU AD-AD. ADDED NOTE 7						
B	1	2.04 & 3.00							EO B1	ON-1 ADDED LDW280-28305-1 BRACKET INSTL						
	2	1, 2.04, 3.00 & 5.00	18B						EO B2	ADD GB11D-3-76(1) TO LDW280M10085-9 WITH MS20470AD4(2). ADDED VIEW AE-AE	LEM-2	✓		A. BEERS 5-5-66		
	3	5.00							EO B3	IN FIELD FOR -1 GR10HAD5(14) HD FS WAS NS						
	4	1, 2.04, 3.00, & 5.00							EO B4	ADD GB11D-12-76(1) & MS20470AD4(2) TO LDW280M10085-9 ADD GB11D-12-76(1) & MS20470AD4(2) TO LDW280M10085-7 ADDED VIEW AF-AF.						
	5	2.04 & 5.00							EO B5	ADD GB11D-12-76 (1) & MS20470AD4(2) (2 PLACES) TO LDW280M10066-1.						

FOR CONTINUATION OF REVISIONS SEE SHEET 1.11

GRUMMAN AIRCRAFT ENGRG CORP, BETHPAGE, L. I., NEW YORK

SIZE	CODE IDENT NO.		
B	26512	LDW280-52075	B
SCALE	NONE		SHEET 1.10

ENG 77.3 5-64

01

NAS 9-1100

MODEL OR END ITEM	NEXT ASSY	MODULE OR SER NO.	REQD PER MODULE OR END ITEM	MODEL OR END ITEM	NEXT ASSY	MODULE OR SER NO.	REQD PER MODULE OR END ITEM	MODEL OR END ITEM	NEXT ASSY	MODULE OR SER NO.	REQD PER MODULE OR END ITEM
								LEM	LDW280-52010	LEM-2(32)	1
PART NO.		GAEC SCH NO.		PART NO.		GAEC SCH NO.		PART NO. LDW280-52075-1		GAEC SCH NO. 31	

(3)

SH REV STATUS: FOR DESCRIPTION OF REV SEE SUBQ SH									
SHEET	1.00	1.10	2.00	2.01	2.02	2.03	2.04	3.00	4.00
REV	F	B	F	D	F	E	F	F	F
SHEET	5.00	1.11	1.12	1.13					
REV	F	F	E	F					
SHEET									
REV									

LAST SECT LTR USED	BA	GRUMMAN REL INFO F		
LAST DASH NO. USED	-1	PRIM NO.	LE(001)	
		215	MR 14	F-2/28/7

UNLESS OTHERWISE SPECIFIED DIMENSIONS ARE IN INCHES.

TOLERANCE UNLESS SPECIFIED FRACTIONS - DECIMALS - ANGLES ±1/32 ±.020 ±1/2°

ORIG DWG AUTH	
DETAIL SPEC REQUIREMENT	
CLASS II ENGRG CHANGE	
CLASS I ENGRG CHANGE	

CONTRACT NO. NAS 9-1100 LINE ITEM #1 DOCUMENTATION TYPE II

DRAWN BY	H DEUTSCH 11-16-65	RELIABILITY	—
LAYOUT BY	D. COPPI		
CHECKED BY	J.S. 12-1-65		
GR. LEADER	J. PUSATERI 12/4		
VEH DES INT	12/6		
STRUCTURE	12/9	PROJ ENGR	12/14
STRUCTURE	Hildesman 12-10	REL GROUP	12/15
WEIGHTS	A Rebuck 12-10		

GRUMMAN AIRCRAFT ENGRG CORP
BETHPAGE, L. I., NEW YORK

FACE ASSEMBLY
ASCENT STAGE - CABIN

SIZE	CODE IDENT NO.		
B	26512	LDW280-52075	F
SCALE	NONE	SHEET 1	OF 13

ENG 77.1 9-64

01 NAS 9-1100

REVISIONS

CHANGE LTR	ITEM NO.	SHEET NO.	ZONE	GRUMMAN INFO ONLY	DET SPEC	CLASS I	CLASS II	ENGRG ORDER	DESCRIPTION	EFFECTIVITY	DISPOSITION OF EXISTING PARTS		CHANGED BY AND DATE	ENGRG APPD	~~GOVT~~ APPD
											REWORK	SCRAP			
B	6	4.00	20 A						REF EO B2 "ADDED GB11D-3-76(1) TO LDW280M10085-9 WITH MS20470AD4(2)" SHOULD BE "ADDED GB11D-3-76(1) TO LDW280M52137-1 WITH MS20470AD4(2)". RIVETS TO BE SQUEEZED. ADDED NOTE 8. SH 1 OF 11 WAS SH 1 OF 10, ADDED SH 1.11.	NOTED	NOT	REQD	A. BEERS 5-5-66		
	7	4.00 5.00	20 A						REF EO B4 "ADDED GB11D-12-76(1) & MS20470AD4(2) TO LDW280M10085-9 & LDW280M10085-7" SHOULD BE "ADDED GB11D-12-76(1) & MS20470AD4(2) TO LDW280M52137-1. RIVETS TO BE SQUEEZED."						
	8	5.00						Ⓡ	REF EO B5 "ADD GB11D-12-76(1) & MS20470AD4(2) (2 PLACES) TO LDW280M10066-1" SHOULD BE "ADDED GB11D-12-76(1) & MS20470AD4(2) (2 PLACES) TO LDW280M52137-1. RIVETS TO BE SQUEEZED."					RNC	
C	1	1.11, 2.02, 2.04 5.00	25A					EO C1	REMOVED (5) GRIOHAD5 RIVETS, AND #5-147 "O" RINGS ADDED LDW 280-28305 (REF).	LEM 2	✓		R. D. BUCARIA 11-21-66		
	2	1.11, 2.04 3 & 5.00	6C 23D					EO C2	ON-1 ADDED GB11D-12-76(4) & MS20470AD(8) TO LDW 280M10085-9, ADDED SECTION AL-AL & AM-AM						
	3	1.11, 2.04 3.00 & 5.00	6C 23D					EO C3	ON-1 ADD GB11D-12-76(4) & MS20470AD4(8) TO LDW 280M10085-7, ADDED SECTION AN-AN						
	4							EO C4	SUPERSEDED BY E.O. C5	NOT REQD	NOT	REQD			
	5	1.11, 2.04, 3.00 & 5.00	5B 24C					EO C5	SUPERSEDES EO C4. ON-1 GB11D-12-76(12), MS20470AD4 (36), LDW280-16020-11(6) & SECTIONS AP-AP & AR-AR	LEM-2	✓				
	6	1.11, 2.04, 3.00 & 5.00	6B 24A					EO C6	ON LDW280-52075-1 ASSY, ADDED LDW280-16021-11, -12, -13 & -14, ADDED SECTION AS-AS				S.J.		

FOR CONTINUATION OF REVISIONS SEE SHEET 1.12

GRUMMAN AIRCRAFT ENGRG CORP, BETHPAGE, L. I., NEW YORK			
SIZE B	CODE IDENT NO. 26512	LDW280-52075	F
SCALE	NONE		SHEET 1.11

ENG 77.3 5-65

01

NAS 9-1100

REVISIONS

CHANGE LTR	ITEM NO.	SHEET NO.	ZONE	GRUMMAN INFO ONLY	DET SPEC	CLASS I	CLASS II	ENGRG ORDER	DESCRIPTION	EFFECTIVITY	DISPOSITION OF EXISTING PARTS		CHANGED BY AND DATE	ENGRG APPD	GOVT APPD
											REWORK	SCRAP			
D	1	1.12, 4.00 5.00	23A 14 B					EO D1	ON SHT 2 & 4 IN F/D & L/M ADDED LDW280-11191-15; LDW 280-11191-11; 659013-8(2); HL10V5-4(2) HL 70-5(2), SECTION AT-AT & NOTE 9 ADDED SH 1.12. SH 1.00 OF 12 WAS SH 1.00 OF 11.	LEM-2	✓		R. NISBET 1-9-67		
	2	1.12 & 4.00						EO D2	ADDED E19 (.165-.171) HOLE (4) REMOVED MS20470AD5 (4) & OPENED 4 HOLES TO E19 (.165-.171) ON-1 ASSY						
	3	1.12, 2.02, 2.03 3.00 & 5.00	6B 25A					EO D3	ON-1 ADD SECTION AU-AU, GB11E-3-76(1) HL10V-5-3(2), HL70-5(2) & DRILL #19 (1 HOLE)						
	4	1.12, 3.00 & 4.00	6B 21C					EO D4	ON-1 ADDED #19 (.165-171 (4 HOLES) & SECTS. AV-AY & BA-BA.						
	5	1.12, 3.00 5.00						EO D5	SUPERSEDED BY E.O. D6	NOT REQD	NOT	REQD			
	6	1.12. 3.00, 5.00	6C 24 A					EO D6	SUPERSEDES D5 IN FLD FOR-1 4 7/16 ± 1/16 (WAS ± 1/32) ADDED SEAL PER LSP-14-14102, MS20470AD5 (3), WAS AD4.						
E	1	1.12, 2.04, 3.00, 4.00 & 5.00	5B 6B 6C 10A					EO E1	ON-1, ADDED LDW 280-28247-1, LDW 280-28298-1, LDW280-28303-1 & 2, LDW 280-51317-1 & 2, & LDW 280-52475-1 ADDED SECT AW-AW	LEM-2	✓				
	2	1.12, 2.01, 2.02 2.03, 2.04, 3.00 4.00	6C 4C					EO E2	ON-1, ADD (1) EACH OF LDW280P11471-13 & 14 AND FASTENERS & (6) SHIMS. ADDED SECT AY-AY						
	3	1.12, 2.02, 2.03 2.04, 3.00 4.00	6C 10B					EO E3	FOR-1 ADDED (1) LDW280P11546-1, (1) LDW320M11611-1, (1) LDW320M11605-1, (2) GS570L-101-004-SEAL, (1) GS570J-21D-SEAL. ADDED SECTION AZ-AZ						
	4	1.12, 2.04, 5.00	28C					EO E4	TO-1, ADDED GB11E-3-76 & MS20470AD4(2) & VIEW						
F	5	1.12, 2.04 4.00	11A & BA					E.O F1	ON-1: ADDED: LDW280-51317-3 & -4 IN B/M & IN VIEW M-M DELETED: MS20470AD5 (2) GR10HAD5 (8) #5-147 (8)				S.J.		

FOR CONTINUATION OF REVISIONS SEE SHEET 1.13

GRUMMAN AIRCRAFT ENGRG CORP, BETHPAGE, L. I., NEW YORK

SIZE	CODE IDENT NO.		
B	26512	LDW280-52075	F
SCALE NONE			SHEET 1.12

ENG 77.3 5-65

01

NAS 9-1100

REVISIONS FOR CONTINUATION OF REVISIONS SEE SHEET

CHANGE LTR	ITEM NO.	SHEET NO.	ZONE	GRUMMAN INFO ONLY	DET SPEC	CLASS I	CLASS II	ENGRG ORDER	DESCRIPTION	EFFECTIVITY	DISPOSITION OF EXISTING PARTS REWORK	DISPOSITION OF EXISTING PARTS SCRAP	CHANGED BY AND DATE	ENGRG APPD	GOVT APPD
F	2	1.00,1.13,2.00 & 3.00	8C						IN FLD. OF DWG & B/M: LDW280-10109-27 & -28 WAS LDW280-10109-21 & -22 ADDED SH 1.13	LM-2	NOT	REQD	R. NISBET 1-15-67		
	3	1.13,2.02,2.03 2.04,3,4 & 5	23B						REF E.O. D1; "ADDED LDW280-11191-15" SHOULD BE -17	LM-2	✓				
	4	1.13	11B						REF EO F1 – SHOULD BE "ON -1 ADDED LDW280-51317 -3 AND -4 (WAS) -1 & -2 (REF EO E1)"	LM-2	NOT	REQD			2/27/67
	5	1.13,2.02,2.03 2.04,3,4 & 5							CHANGED COMMERCIAL CALLOUT TO G.A.E.C. VENDOR APPROVED EQUIV. ADDED NOTE 10 & REMOVED NOTE 5	NOT REQD	NOT	REQD	S.J.		
	6	1.13, 2.02 3.00 & 4.00	6B 6A 21C					[illegible]	IN F/D & B/M FOR -1 ADDED LDW280-28089-1. RELOCATED LEADER FOR LDW280-10118-3 CALLOUT. LDW340-28080-1 (WAS) LDW340-28080 (REF). FG CHG ONLY	LM-2	✓		CARSTENSEN 2-13-67 EG		

CHG APPROVED

LTR	GROUP LDR	VEH. DES. INT.	STRUCTURES	STRUCTURES	WEIGHTS	RELIABILITY
F		2/8/67	2-9			

GRUMMAN AIRCRAFT ENGRG CORP., BETHPAGE, L. I., NEW YORK

SIZE	CODE IDENT NO.		
B	26512	LDW280-52075	F
SCALE NONE			SHEET 1.13

ENG 77.16 3-66

01

NAS 9-1100

QTY PER ASSEMBLY -1	CODE IDENT	PART NO.	I&T	NOMENCLATURE OR DESCRIPTION	MATERIAL	GOVT SPEC	COML SPEC	STOCK SIZE	PROCESS SYM	FINISH NO.	ZONE
8		LDW280-10148-17	E	PLATE	SEE DWG						13A
1		LDW280-10147-22		CLIP							8A
1		-21									8A
1		-14									17B
1		-13									17B
2		-12									16A
2		LDW280-10147-11		CLIP							16A
3		LDW280-10146-18		FORMER							12B
3		-17									12B
1		-16									13A
1		-15									13A
4		-14									13B
4		-13									13B
2		-12									11B
2		LDW280-10146-11		FORMER							11B
1		LDW280-10118-3		STIFFENER INSTL							6B
1		LDW280-10109-28		SPLICE STRAP							8C
1		LDW280-10109-27		SPLICE STRAP							8C
2		LDW280-10109-11		SPLICE STRAP							3B
1		LDW280-10105-7		STIFFENER INSTL							6E
1		-5									6B
1		-3									6B
1		LDW280-10105-1		STIFFENER INSTL	SEE DWG						6C
		LDW280-52075-1	E	FACE ASSY					NONE	NONE	6A

SYM OR NO.	PROCESS OR FINISH	GRUMMAN SPEC OR MILITARY SPEC	SYM OR NO.	PROCESS OR FINISH	GRUMMAN SPEC OR MILITARY SPEC	SYM OR NO.	PROCESS OR FINISH	GRUMMAN SPEC OR MILITARY SPEC
						76	ALODINE	LSP 14-9010
						88	ANODIZE	LSP-14-9030

I & T: IDENTIFICATION AND TRACEABILITY IN ACCORDANCE WITH : NONE

GRUMMAN AIRCRAFT ENGRG CORP, BETHPAGE, L. I., NEW YORK

SIZE	CODE IDENT NO.		
B	26512	LDW280-52075	F
SCALE NONE		SHEET 2.00	

ENG 77.2 7-65

01

NAS 9-1100

QTY PER ASSEMBLY -1	CODE IDENT	PART NO.	I&T	NOMENCLATURE OR DESCRIPTION	MATERIAL	GOVT SPEC	COML SPEC	STOCK SIZE	PROCESS SYM	FINISH NO.	ZONE
		MS20470DD5	E	RIVET	STD PART						
		MS20470AD6									
		MS20470AD5									
		MS20470AD4			STD PART						
22		GR10HAD5-6			GRUMMAN STD						
96		GR10HAD5-5									
22		GR10HAD5-4									
6		GR10HAD4-6		RIVET							
8		GN512H-08		COLLAR							
76		GN512H-3		COLLAR							
4		G23-2-24		BEVEL WASHER							
6		G22-5-12		WASHER							
6		G22-4-6		WASHER	GRUMMAN STD						
1		LDW280-28089-1		STIFFENER INSTL	SEE DWG						6B
1		LDW340-28080-1		SUPPORT INSTL							21C
1		LDW320M11611-1		FITTING							6C
1		LDW320M11605-1		BUSHING							10B
1		LDW280M52137-1		FACE MACHINING							3C
1		LDW280P11546-1		SUPPORT ASSY							10B
1		LDW280M10320-2		GUSSET							13A
1		LDW280M10320-1		GUSSET							13A
1		LDW280M10265-2		STRUT							18B
1		LDW280M10265-1		STRUT							18B
2		LDW280M10082-3		STIFFENER							5B
2		LDW280M10082-1	E	STIFFENER	SEE DWG						5B

SYM OR NO.	PROCESS OR FINISH	GRUMMAN SPEC OR MILITARY SPEC	SYM OR NO.	PROCESS OR FINISH	GRUMMAN SPEC OR MILITARY SPEC	SYM OR NO.	PROCESS OR FINISH	GRUMMAN SPEC OR MILITARY SPEC

I & T: IDENTIFICATION AND TRACEABILITY IN ACCORDANCE WITH :

GRUMMAN AIRCRAFT ENGRG CORP, BETHPAGE, L. I., NEW YORK

SIZE	CODE IDENT NO.		
B	26512	LDW280-52075	F

SCALE NONE SHEET 2.02

ENG 77.2 7-65

01 NAS 9-1100

QTY PER ASSEMBLY -1	CODE IDENT	PART NO.	I&T	NOMENCLATURE OR DESCRIPTION	MATERIAL	GOVT SPEC	COML SPEC	STOCK SIZE	PROCESS SYM	FINISH NO.	ZONE
5		GW10G-2		WASHER							
5		GS570P-08		SEAL							
263		GS570J-3D	E	SEAL							
160		GS570J-1D		SEAL							
2		GS570L-101-004		SEAL							
14		GL500C-5-3		PIN							
14		GL500C-5-2		PIN							
1		GS570J-21D		SEAL							
30		GN512H-08		COLLAR							
4		GB511F-08-3		PIN							
12		GB511F-08-2									
1		GB511K-08-2									
4		GB511D-08-3									
5		GB511K-08-3									
6		GB511K-3-6									
6		-5									
14		-4									
2		-3									
48		GB511K-3-2									
4		GB511K-08-4									
2		NAS1525-16			STD PART						
2		-11									
2		-4									
6		-3									
6		NAS1525-2		PIN							
46		NAS1080D5		COLLAR							
8		MS21042L4		NUT							
20		MS21042L3	E	NUT	STD PART						

SYM OR NO.	PROCESS OR FINISH	GRUMMAN SPEC OR MILITARY SPEC	SYM OR NO.	PROCESS OR FINISH	GRUMMAN SPEC OR MILITARY SPEC	SYM OR NO.	PROCESS OR FINISH	GRUMMAN SPEC OR MILITARY SPEC

I & T: IDENTIFICATION AND TRACEABILITY IN ACCORDANCE WITH :

GRUMMAN AIRCRAFT ENGRG CORP, BETHPAGE, L. I., NEW YORK

SIZE B
CODE IDENT NO. 26512
LDW280-52075 F
SCALE NONE
SHEET 2.03

ENG 77.2 7-65

01

NAS 9-1100

QTY PER ASSEMBLY -1	CODE IDENT	PART NO.	I&T	NOMENCLATURE OR DESCRIPTION	MATERIAL	GOVT SPEC	COML SPEC	STOCK SIZE	PROCESS SYM	FINISH NO.	ZONE
1		LDW280-16021-14		SUPPORT	SEE DWG						
1		-13									
1		-12									
1		LDW280-16021-11		SUPPORT							
6		LDW280-16020-11		BRACKET	SEE DWG						
2		GB11E-3-76		BRACKET	GRUMMAN STD						
		SEE NOTE 9		SHIM					NONE	88	
		SEE NOTE 7		SHIM					NONE	88	
24		GB11D-12-76	E	BRACKET	GRUMMAN STD						
1		GB11D-3-76		BRACKET	GRUMMAN STD						
95		GR10HAD5		RIVET	GRUMMAN STD						
154		GR10HAD4		RIVET	GRUMMAN STD						
1		LDW280-28305-1		BRACKET INSTL	SEE DWG						
1		LDW280-52475-1		SUPPORT INSTL	SEE DWG						
1		LDW280M10815-1		FITTING	SEE DWG						
1		LDW280-28298-1		SUPPORT INSTL							
1		LDW280M10106-2		FITTING							
1		LDW280M10706-1		FITTING							
1		LDW280-28247-1		SUPPORT INSTL							
1		LDW280M10705-1		FITTING							
1		LDW280-28303-2		SUPPORT INSTL							
1		LDW280-28303-1		SUPPORT INSTL							
1		LDW280-28246-1		SUPPORT INSTL							
1		LDW280-51317-4		SUPPORT INSTL							
1		LDW280-51317-3		SUPPORT INSTL							
1		LDW280-10841-19		DOUBLER							
1		LDW280-10841-17									
1		LDW280-10841-15									
1		LDW280-10841-13									
1		LDW280-10841-11	E	DOUBLER	SEE DWG						

SYM OR NO.	PROCESS OR FINISH	GRUMMAN SPEC OR MILITARY SPEC	SYM OR NO.	PROCESS OR FINISH	GRUMMAN SPEC OR MILITARY SPEC	SYM OR NO.	PROCESS OR FINISH	GRUMMAN SPEC OR MILITARY SPEC

I & T: IDENTIFICATION AND TRACEABILITY IN ACCORDANCE WITH :

GRUMMAN AIRCRAFT ENGRG CORP, BETHPAGE, L. I., NEW YORK

SIZE	CODE IDENT NO.		
B	26512	LDW280-52075	F
SCALE NONE		SHEET 2.04	

ENG 77.2 7-65

01

NAS 9-1100

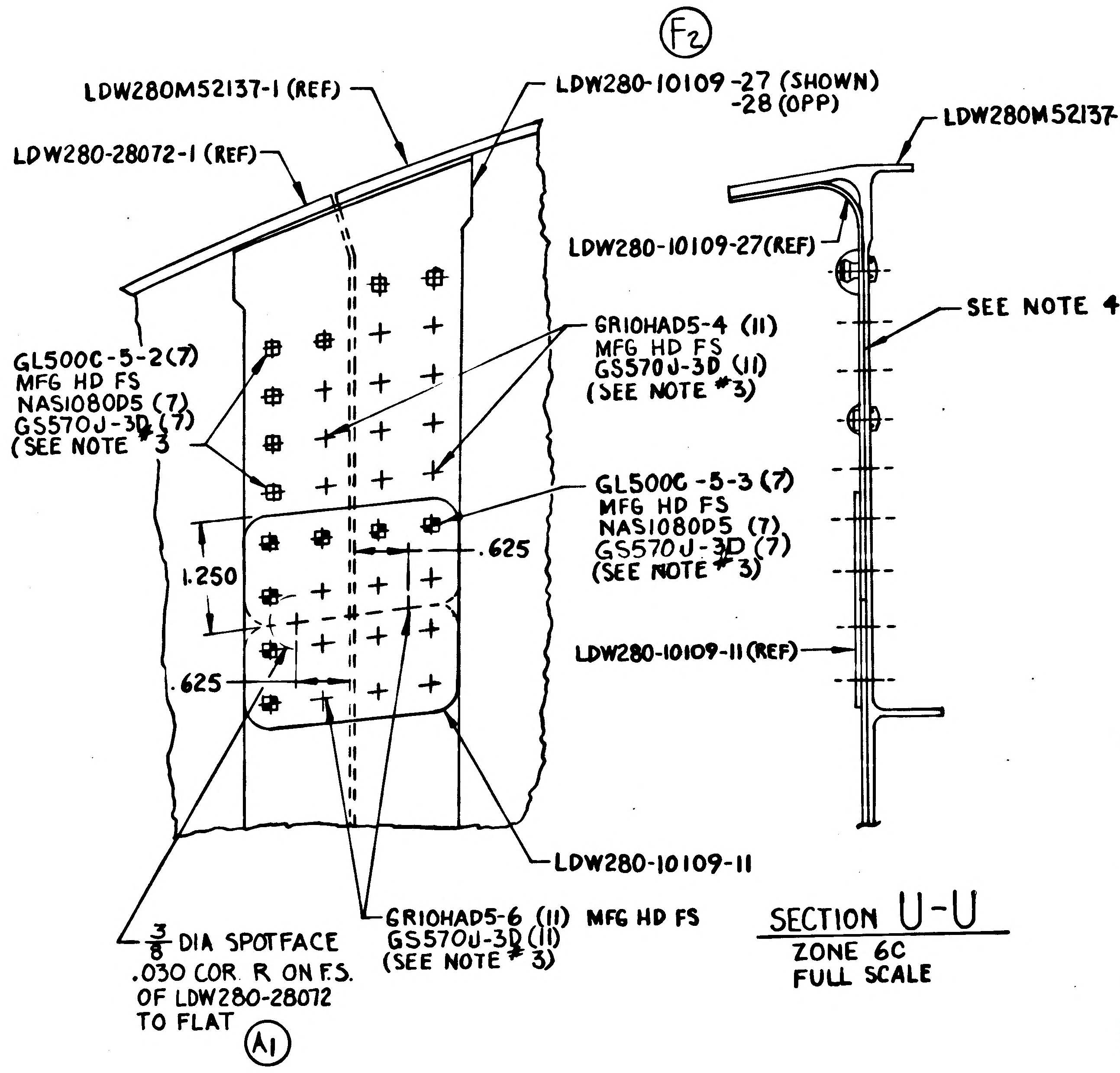
F2
LDW280M52137-1 (REF)
LDW280-10109-27 (SHOWN)
-28 (OPP)
LDW280-28072-1 (REF)
GL500C-5-2(7)
MFG HD FS
NAS1080D5 (7)
GS570J-3D (7)
(SEE NOTE 3)
GR10HAD5-4 (11)
MFG HD FS
GS570J-3D (11)
(SEE NOTE #3)
GL500C-5-3 (7)
MFG HD FS
NAS1080D5 (7)
GS570J-3D (7)
(SEE NOTE #3)
1.250
.625
.625
LDW280-10109-11
3/8 DIA SPOTFACE
.030 COR R ON F.S.
OF LDW280-28072
TO FLAT
A1
GR10HAD5-6 (11) MFG HD FS
GS570J-3D (11)
(SEE NOTE #3)
LDW280M52137-1 (REF)
LDW280-10109-27(REF)
SEE NOTE 4
LDW280-10109-11 (REF)

SECTION U-U
ZONE 6C
FULL SCALE

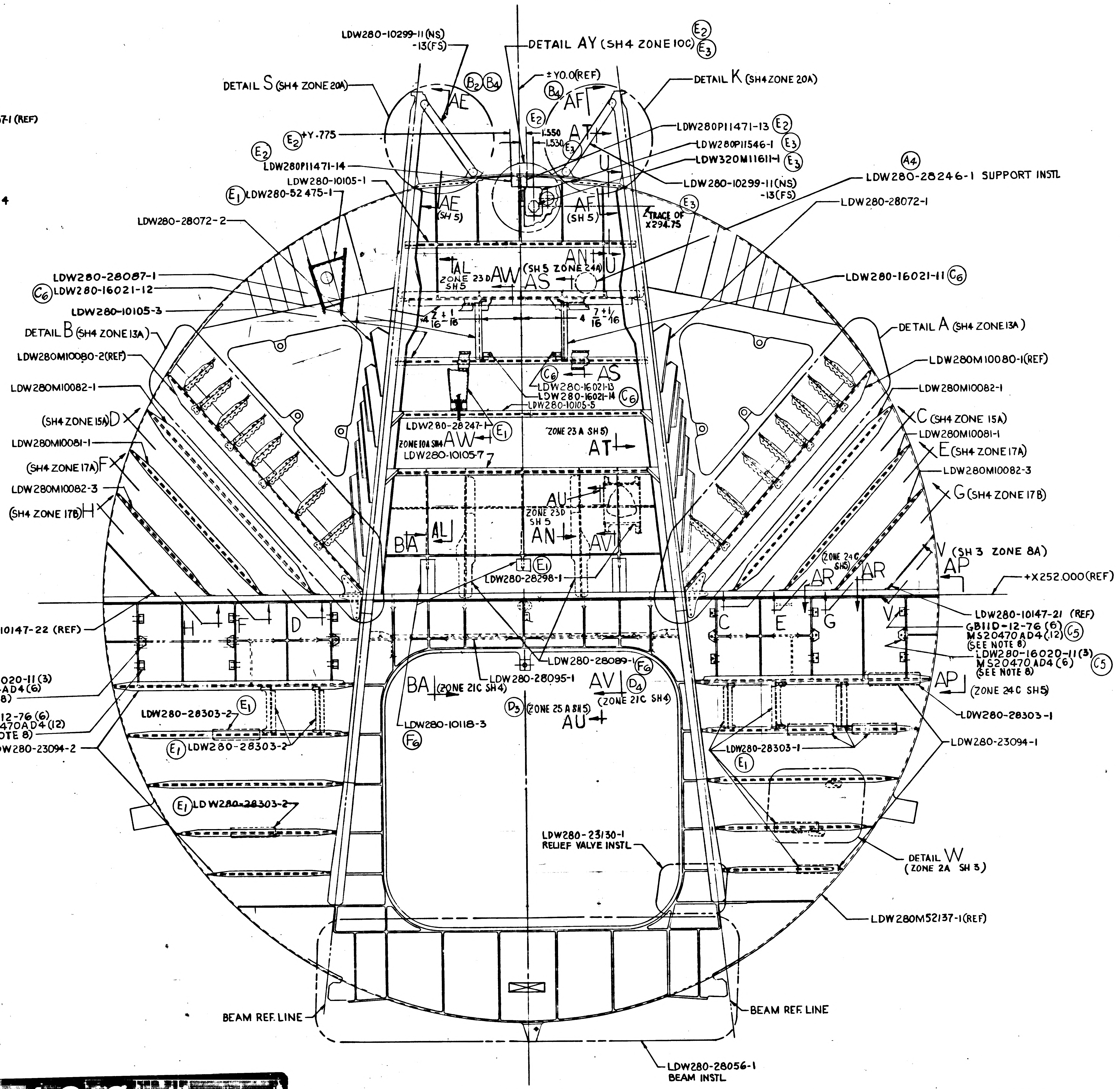
LDW280-10299-11 (NS)
-13(FS)
DETAIL AY (SH4 ZONE 10C) E2 E3
DETAIL S (SH4 ZONE 20A)
B2 B4
± Y0.0(REF)
B4
DETAIL K (SH4 ZONE 20A)
AE
AF
E2 +Y .775
E2
1.550
1.530
E3
AT
LDW280P11471-13 E2
LDW280P11546-1 E3
LDW320M11611-1 E3
E2
LDW280P11471-14
LDW280-10105-1
U
LDW280-10299-11 (NS)
-13(FS)
A4
LDW280-28246-1 SUPPORT INSTL
E1 LDW280-52475-1
AE (SH 5)
AF (SH 5)
E3
TRACE OF X294.75
LDW280-28072-2
LDW280-28072-1
AN
U
AL
ZONE 23D SH5
AW
AS
(SH5 ZONE 24A)
LDW280-28087-1
C6 LDW280-16021-12
LDW280-16021-11 C6
LDW280-10105-3
4 7/16 ± 1/16
4 7/16 ± 1/16
DETAIL B (SH4 ZONE 13A)
DETAIL A (SH4 ZONE 13A)
LDW280M10080-2(REF)
LDW280M10080-1(REF)
C6
AS
LDW280-16021-13
LDW280-16021-14 C6
LDW280-10105-5
LDW280M10082-1
LDW280M10082-1
(SH4 ZONE 15A) D
C (SH4 ZONE 15A)
LDW280-28247-1 E1
ZONE 10A SH4 AW
LDW280-10105-7
ZONE 23A SH5)
AT
LDW280M10081-1
LDW280M10081-1
(SH4 ZONE 17A) F
E (SH4 ZONE 17A)
LDW280M10082-3
LDW280M10082-3
(SH4 ZONE 17B) H
G (SH4 ZONE 17B)
AU
ZONE 23D SH 5
AN
BA
AL
AV
E1
LDW280-28298-1
(ZONE 24C SH5)
AR
AR
V (SH 3 ZONE 8A)
AP
+X252.000(REF)
LDW280-10147-22 (REF)
H
F
D
C
E
G
V
LDW280-10147-21 (REF)
GB11D-12-76 (6) C5
MS20470AD4 (12)
(SEE NOTE 8)
LDW280-16020-11 (3)
MS20470AD4 (6) C5
(SEE NOTE 8)
LDW280-16020-11 (3)
C5 MS20470-AD4 (6)
(SEE NOTE 8)
LDW280-28089-1 F6
LDW280-28095-1
BA (ZONE 21C SH4)
AV D4
(ZONE 21C SH4)
D3 (ZONE 25A SH5)
AU
AP (ZONE 24C SH5)
GB11D-12-76 (6)
C5 MS20470AD4 (12)
(SEE NOTE 8)
LDW280-28303-2 E1
LDW280-28303-1
LDW280-23094-2
E1 LDW280-28303-2
LDW280-10118-3
F6
LDW280-28303-1
E1
LDW280-23094-1
E1 LDW280-28303-2
LDW280-23130-1
RELIEF VALVE INSTL
DETAIL W
(ZONE 2A SH 3)
LDW280M52137-1(REF)
BEAM REF. LINE
BEAM REF. LINE
LDW280-28056-1
BEAM INSTL

LDW280-52075-1 ASSY
VIEW LOOKING AFT

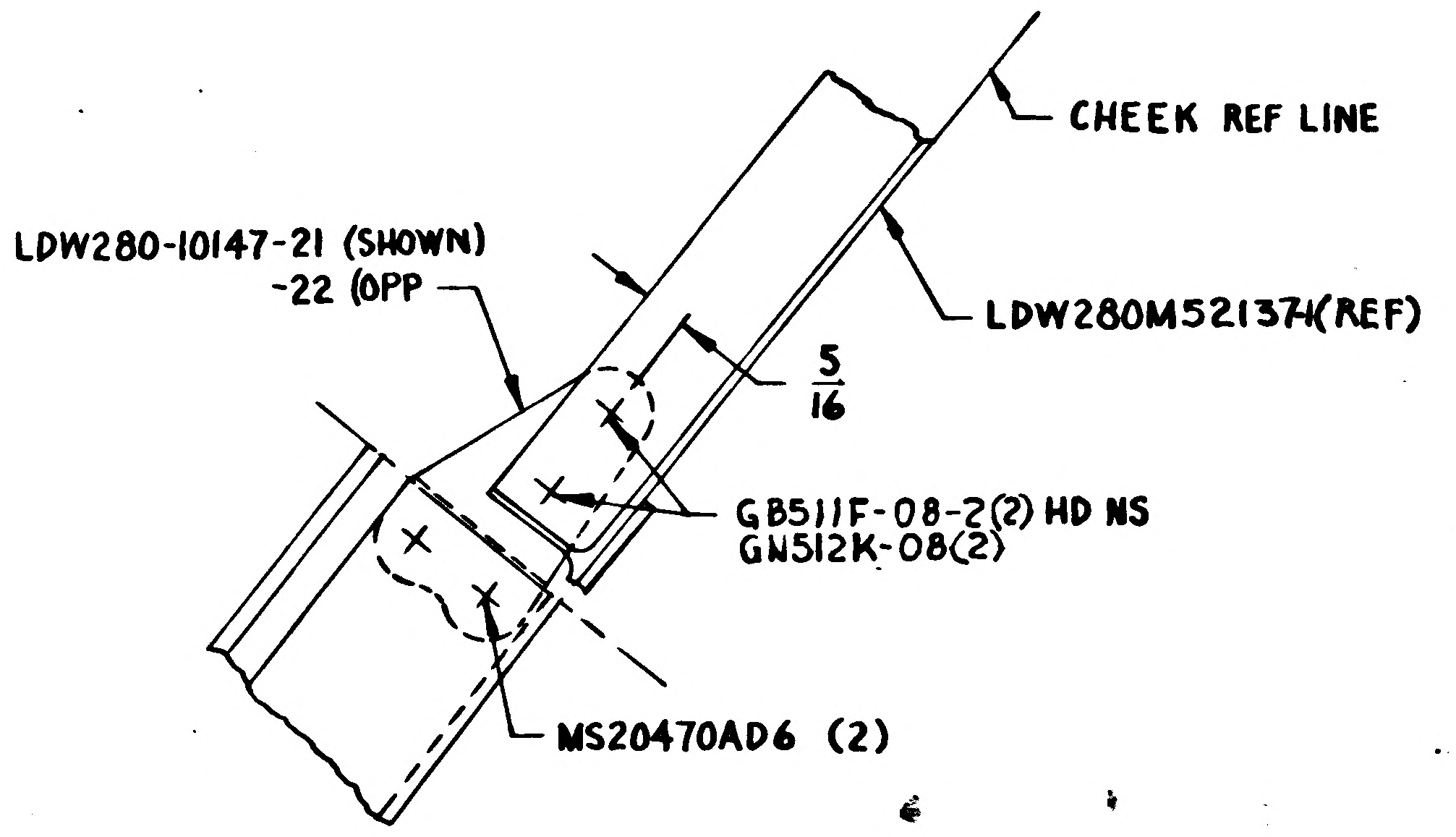
CHEEK REF LINE
LDW280-10147-21 (SHOWN)
-22 (OPP)
LDW280M52137-1(REF)
5/16
GB511F-08-2(2) HD NS
GN512K-08(2)
MS20470AD6 (2)

SECTION V-V
ZONE 5B
FULL SCALE

01/02

NAS 9-1100

CODE IDENT NO. 26512	
LDW280-52075	SH 3

NOTES:
1. NO TOOLING HOLES PERMITTED IN PARTS
2. SHIM AS REQD USING ALUMINUM ALLOY 2024T3 ALCLAD QQ-A-250/5 FINISH 76
3. SEAL FASTENER PER LSP 14-14102
4. NOTED: FAYING SURFACES TO BE SEALED PER LSP 14-14102
~~5. FINAL HOLE SIZE FOR: HL10V-6 TO BE (.1895 .1915)~~
~~HL18-5 TO BE (.164 - .166)~~
~~NAS1525 TO BE (.164 - .166)~~
~~HL22-5 TO BE (.164 - .166~~
~~75LP-E5 TO BE (.164 - .166)~~
6. SPOTFACE .500 DIA .062 CORNER RADIUS.
7. SHIM .040, 2024T3 AL ALLOY. FINISH 88 PER LSP-14-9030
8. MS20470AD4 RIVETS THRU INTEGRAL FLANGES OF MACHINED PARTS TO BE SQUEEZED.
9. SHIM AS REQD USING ALUMINUM ALLOY QQ-A-250/4 2024-T3 FINISH #88
10. INSTALL GB511K & GB511F PER LSP14-15306 & GL500C & NAS1525 PER LSP14-15308

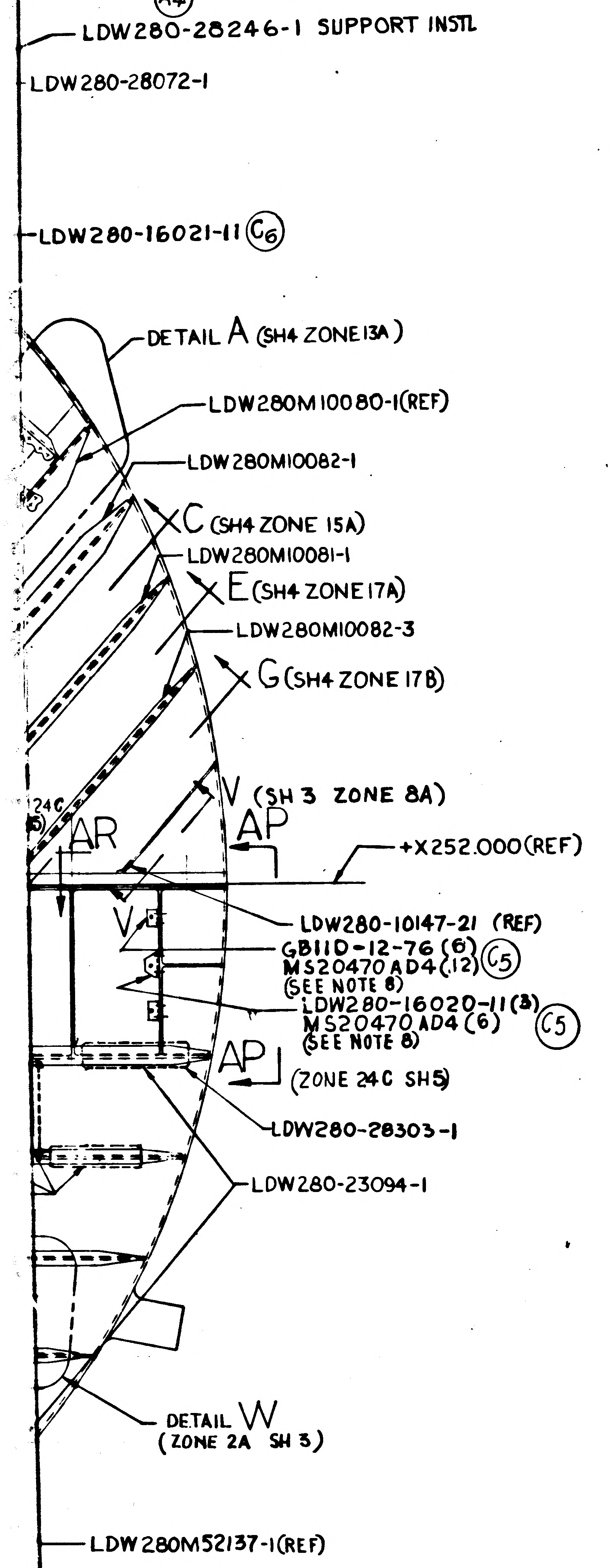

(A4)
LDW280-28246-1 SUPPORT INSTL
LDW280-28072-1
LDW280-16021-11 (C6)
DETAIL A (SH4 ZONE 13A)
LDW280M10080-1(REF)
LDW280M10082-1
C (SH4 ZONE 15A)
LDW280M10081-1
E (SH4 ZONE 17A)
LDW280M10082-3
G (SH4 ZONE 17B)
V (SH 3 ZONE 8A)
AR
AP
+X252.000(REF)
V
LDW280-10147-21 (REF)
GB11D-12-76 (6) (C5)
MS20470AD4 (12)
(SEE NOTE 8)
LDW280-16020-11 (3)
MS20470AD4 (6) (C5)
(SEE NOTE 8)
AP
(ZONE 24C SH5)
LDW280-28303-1
LDW280-23094-1
DETAIL W
(ZONE 2A SH 3)
LDW280M52137-1(REF)

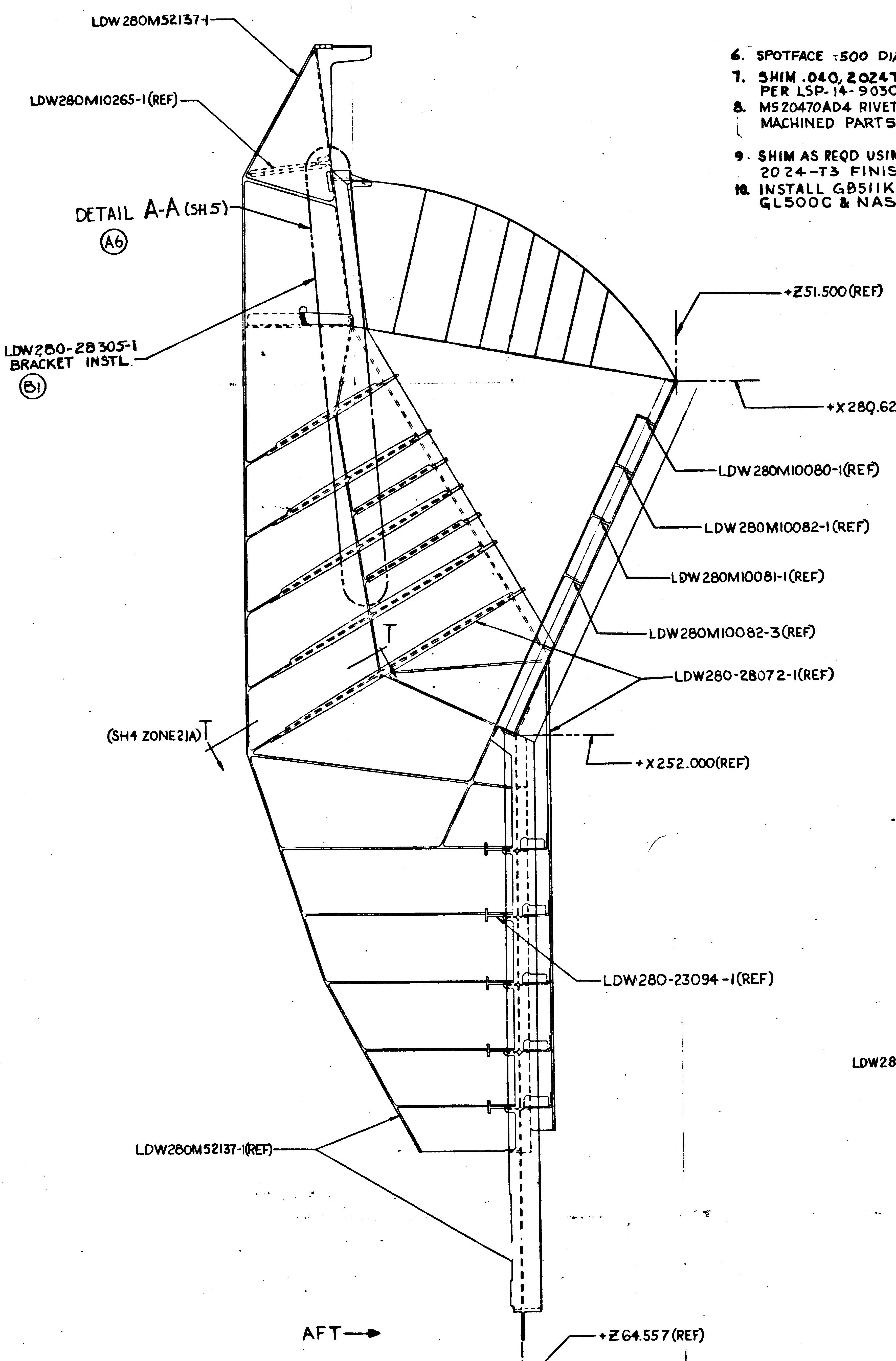

LDW280M52137-1
LDW280M10265-1(REF)
DETAIL A-A (SH5)
(A6)
LDW280-28305-1
BRACKET INSTL.
(B1)
+Z51.500(REF)
+X280.625(REF)
LDW280M10080-1(REF)
LDW280M10082-1(REF)
LDW280M10081-1(REF)
LDW280M10082-3(REF)
LDW280-28072-1(REF)
T
(SH4 ZONE21A) T
+X252.000(REF)
LDW280-23094-1(REF)
LDW280M52137-1(REF)
AFT
+Z64.557(REF)

SYMBOL LEGEND

SYMBOLS ARE FOR LOCATION AND QUANTITY ONLY

KEY TO PURPOSE OF HOLES, ETC., MARKED REF.

(D2) E-19 REF ELECTRONICS DRILL #19 (.165-.171)

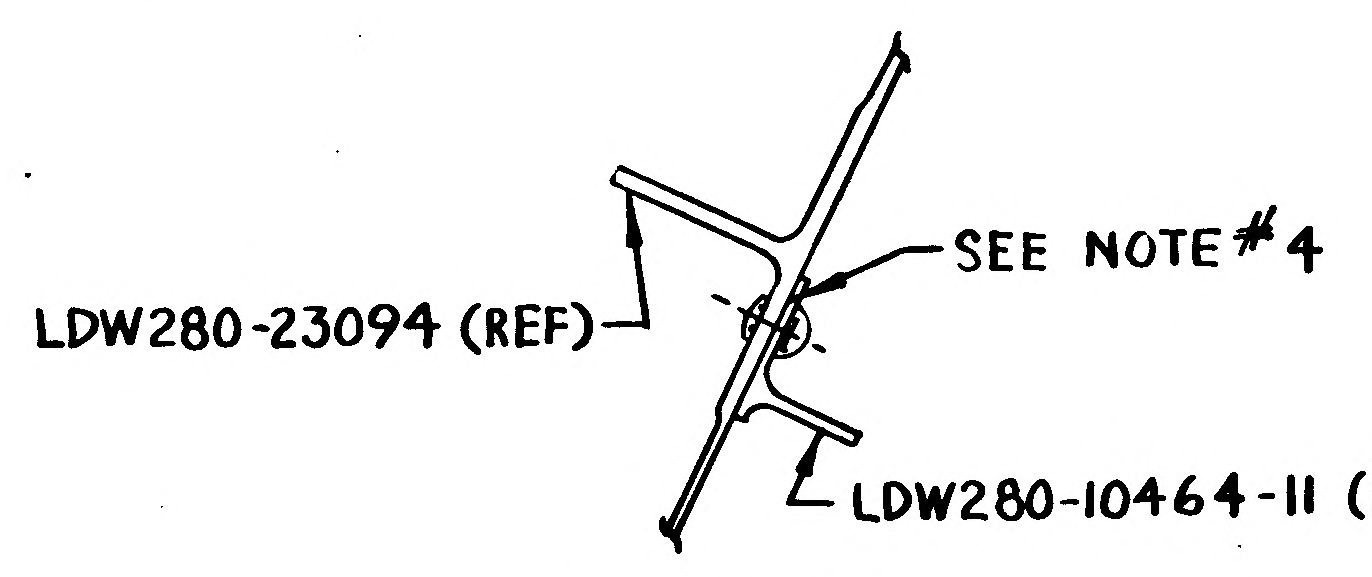

LDW280-23094 (REF)
SEE NOTE #4
LDW280-10464-11 (REF)

SECTION Y-Y
ZONE 1A
FULL SCALE

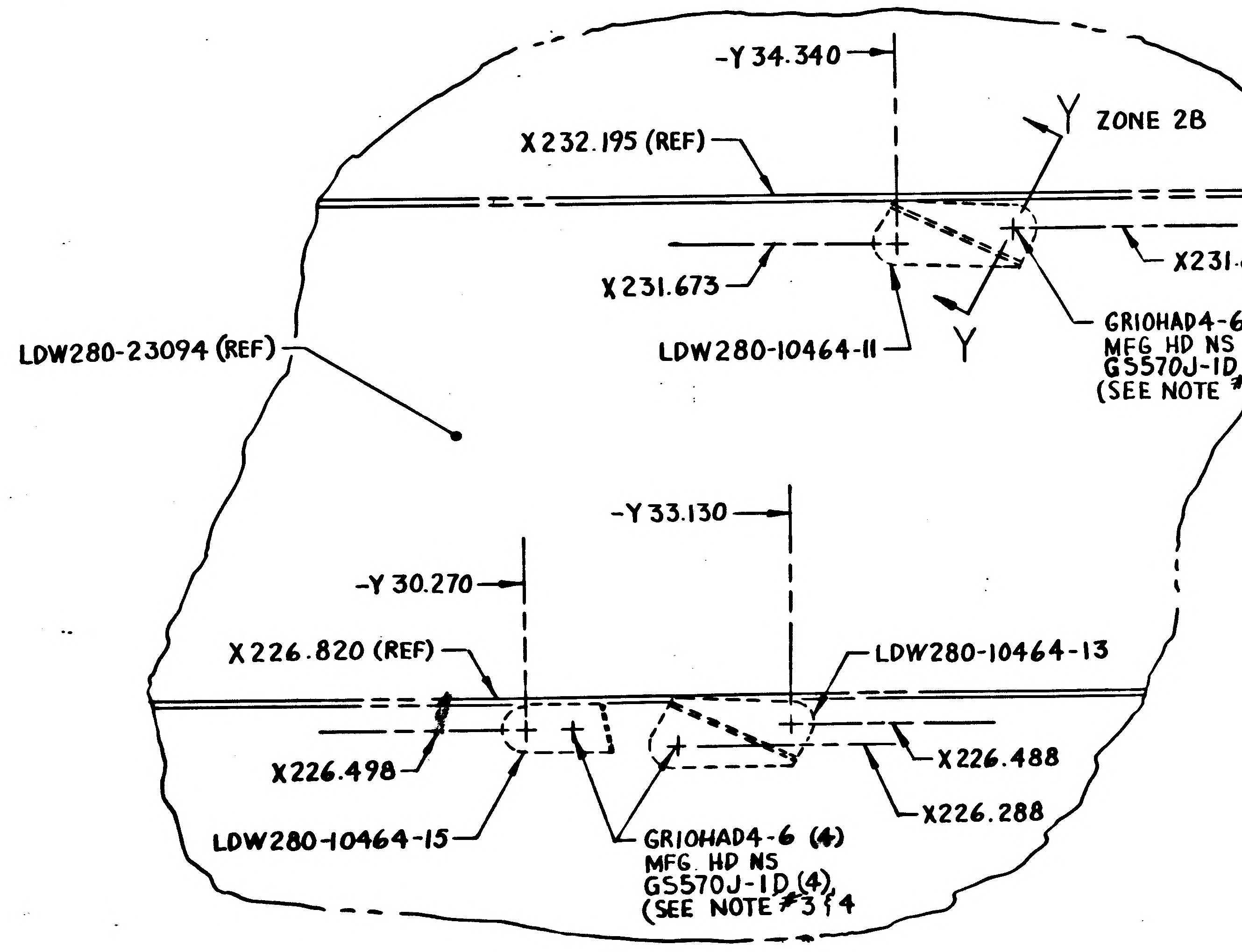

-Y34.340
Y ZONE 2B
X232.195 (REF)
X231.828
X231.673
LDW280-10464-11
Y
GR10HAD4-6 (2)
MFG HD NS
GS570J-1D (2)
(SEE NOTE #3)
LDW280-23094 (REF)
-Y33.130
-Y30.270
X226.820 (REF)
LDW280-10464-13
X226.488
X226.498
X226.288
LDW280-10464-15
GR10HAD4-6 (4)
MFG HD NS
GS570J-1D (4)
(SEE NOTE #3 & 4)

DETAIL W
ZONE 5A
FULL SCALE

MANUFACTURING OPERATIONS UNLESS OTHERWISE SPECIFIED NOTES CHECKED ✓ APPLY TO THIS DWG.	
RUBBER STAMP PART NUMBER AND ALL OTHER MARKINGS IN REGION MARKED	✓
FILLET AND INSIDE CORNER RADII TOLERANCES .016R TO .062R ± .010 .063R TO .250R ± .015 OVER .250R ± .030	
DEPTH SHOWN FOR TAPPED HOLES IS FULL THDS. 2-3 IMP THDS. BEYOND PERMISSIBLE.	
EXTERNAL THREAD LENGTH SHOWN INCLUDES 2 IMPERFECT THREADS MAX.	
DO NOT CADMIUM PLATE & PAINT HOLES OR SURFACES MARKED WITH DOUBLE ASTERISK.	
MISMATCH STEP OF ± .005 PERMISSIBLE DUE TO CHANGE OF CUTTERS AT INSIDE INTERSECTING SURFACES.	
DIAMETERS MARKED MUST BE CONCENTRIC WITHIN FULL INDICATOR READING	
HOLES MUST BE KEPT FREE OF CHROME PLATING SOLUTION.	
ALL DIMENSIONS SHOWN TO BE MET AFTER CADMIUM PLATING. THICKNESS OF PLATE .0003 MIN. TO .0005 MAX. MIN. THICKNESS TO BE .0002 ON THREADED AREAS. NO ALLOWANCE FOR PLATING IN HOLES	
125 SURFACE ROUGHNESS INCLUDING REAMED HOLES PER MIL-STD-10	
200 FOR ALL DRILLED HOLES	
REMOVE ALL BURRS. BREAK ALL EDGES .015-.031	
INSPECTION INFORMATION MINIMUM PERMISSIBLE ~~AVERAGE~~ EDGE DISTANCE ~~MARKED~~ IS 1½ FASTENER DIA FROM FASTENER ℄	✓
SYMBOL ✓ DENOTES SURFACE TO BE MACHINED	
UNLESS OTHERWISE SPECIFIED TOLERANCE ON FLANGES IS ± 1/32	
LENGTHS OF AN, NAS & MS AL ALY RIVETS SHORTER THAN 1 INCH ARE NOT SPECIFIED.	✓
TOLERANCE ON LOFTED DELINEATIONS IS	

DWG SIZE 34 X 82

PRINTING INFO ONLY
FULL SIZE SHEET AREA (36 X 84) = 21 SQ. FT.
1/2 SIZE SHEET AREA (1/4 OF FULL) = 5.25 SQ. FT.

PRINT TRIM LINE

C B A

LDW280-52075 F

LDW280-52075 F

02/02 NAS 9-1100

CODE IDENT NO. 26512	
LDW280-52075	SH 3

GRUMMAN AIRCRAFT ENGRG CORP., BETHPAGE, L. I., NEW YORK

MODEL OR END ITEM	SIZE	CODE IDENT NO.		
LEM	J	26512	LDW280-52075	F
	SCALE ¼ SIZE & NOTED		SHEET 3.00	

THIS IS AN ORIGINAL DRAWING

2FR.

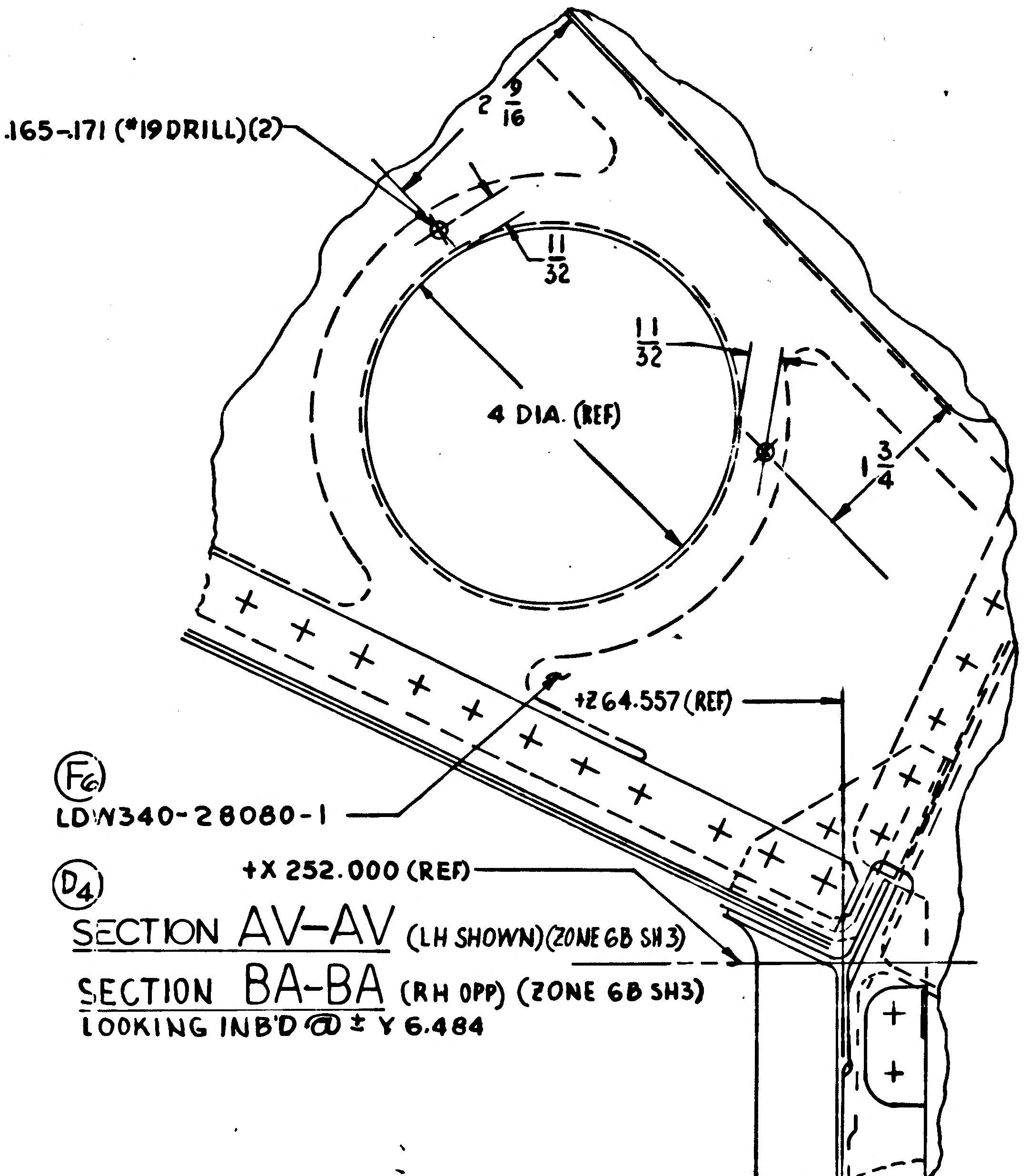
.165-.171 (#19 DRILL)(2)
2 9/16
11/32
11/32
4 DIA. (REF)
1 3/4
+Z64.557 (REF)
F6
LDW340-28080-1
D4
+X 252.000 (REF)

SECTION AV-AV (LH SHOWN)(ZONE 6B SH3)
SECTION BA-BA (RH OPP) (ZONE 6B SH3)
LOOKING INB'D @ ± Y 6.484

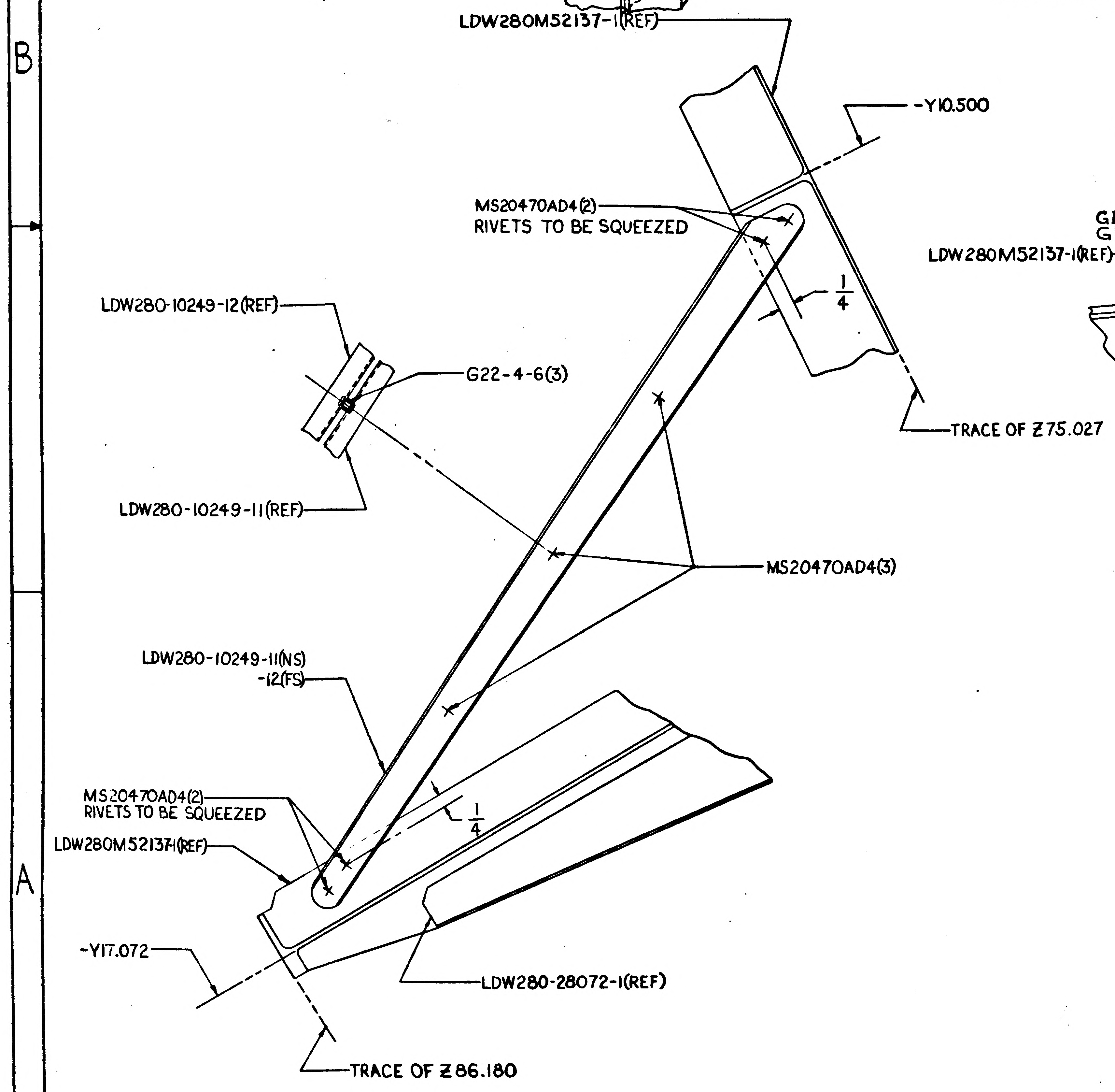
LDW280M52137-1(REF)
-Y10.500
MS20470AD4(2)
RIVETS TO BE SQUEEZED
1/4
LDW280-10249-12(REF)
G22-4-6(3)
TRACE OF Z75.027
LDW280-10249-11(REF)
MS20470AD4(3)
LDW280-10249-11(NS)
-12(FS)
MS20470AD4(2)
RIVETS TO BE SQUEEZED
1/4
LDW280M52137-1(REF)
-Y17.072
LDW280-28072-1(REF)
TRACE OF Z86.180

SECTION T-T (SH3 ZONE 3B)

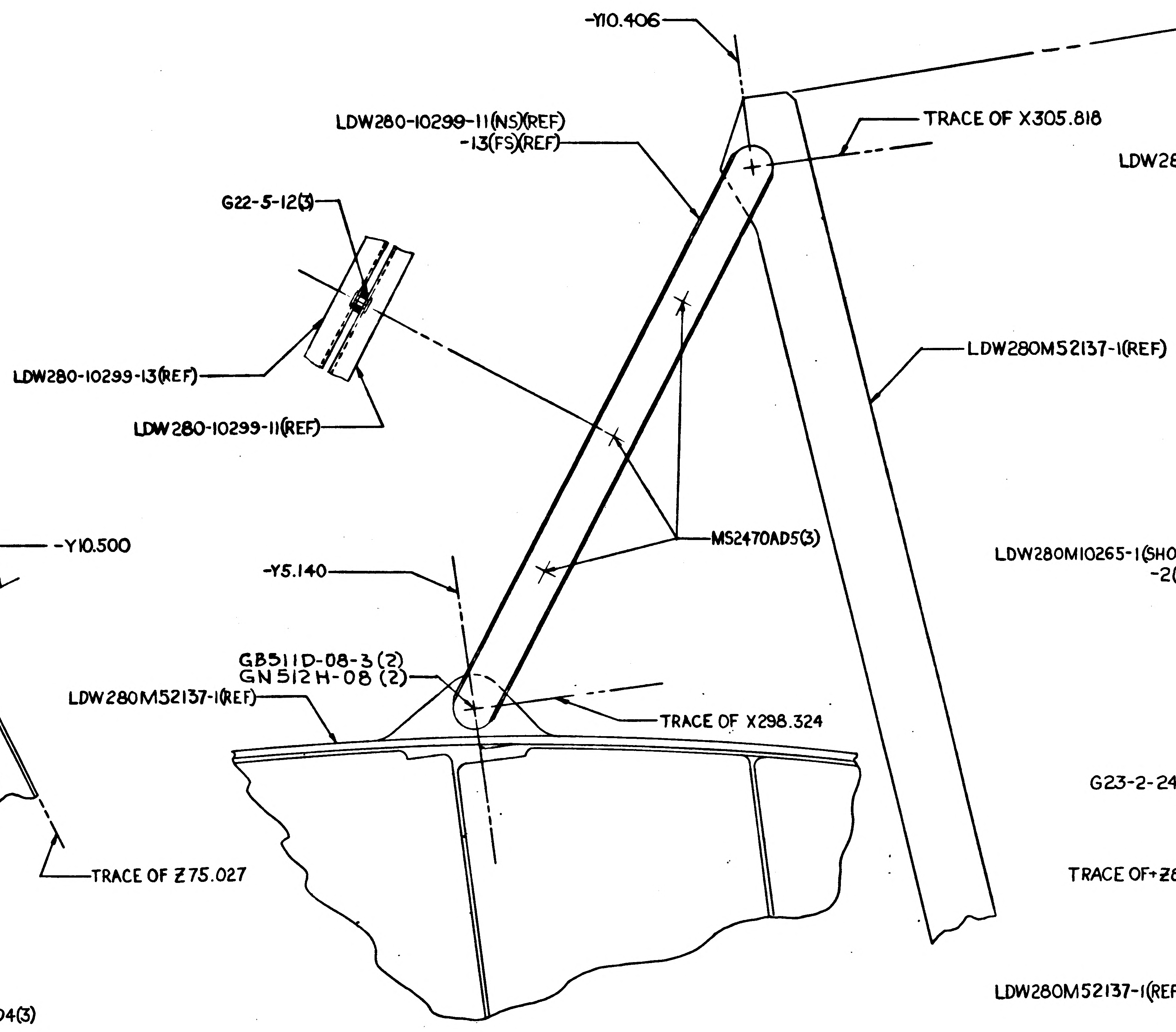
-Y10.406
TRACE OF X305.818
LDW280-10299-11(NS)(REF)
-13(FS)(REF)
G22-5-12(3)
LDW280M52137-1(REF)
LDW280-10299-13(REF)
LDW280-10299-11(REF)
MS20470AD5(3)
-Y5.140
GB511D-08-3 (2)
GN512H-08 (2)
LDW280M52137-1(REF)
TRACE OF X298.324

DETAIL K SHOWN (SH3 ZONE 5C)
DETAIL S OPP (SH3 ZONE 6C)
TRUE VIEW

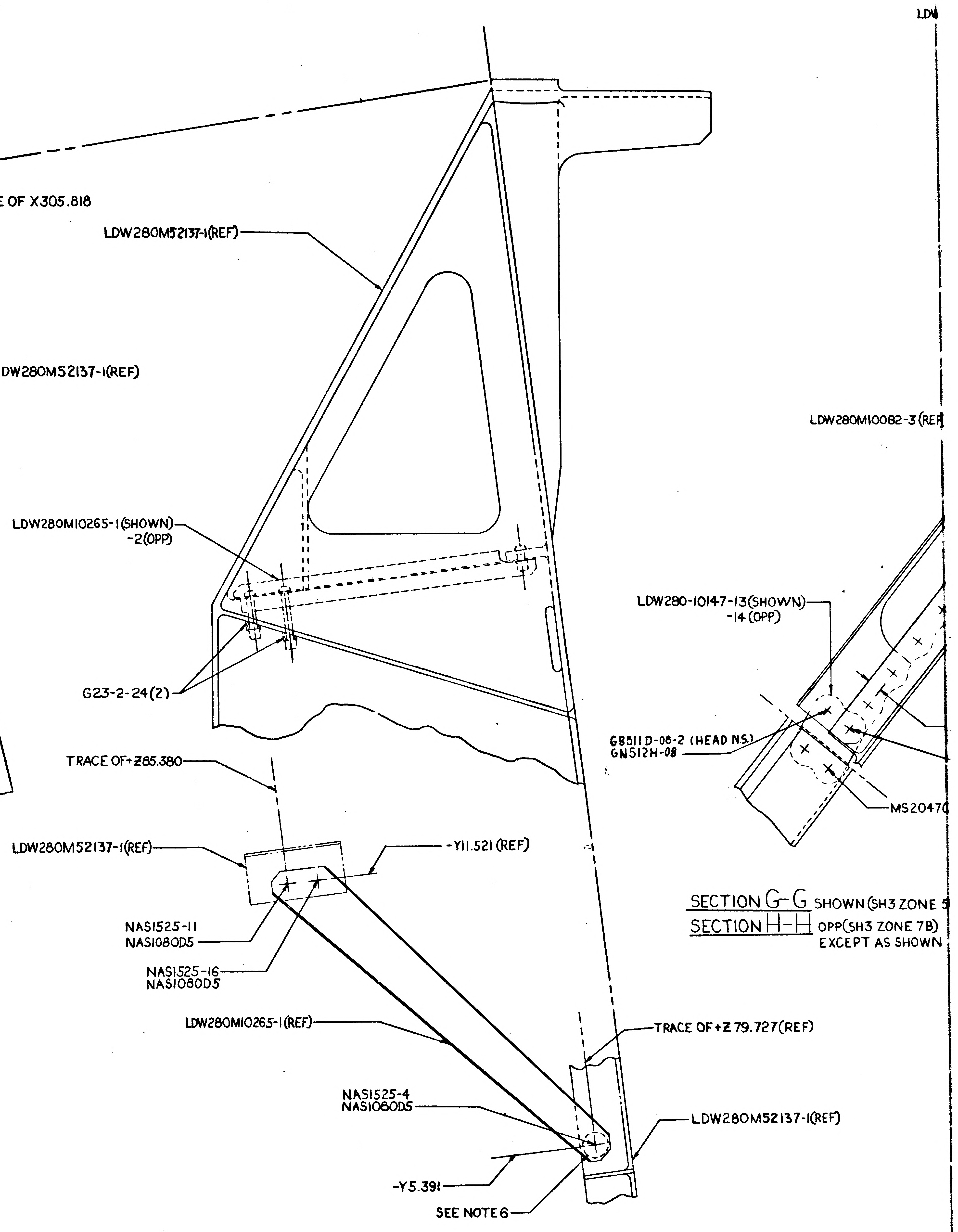
LDW280M52137-1(REF)
LDW280M10082-3(REF)
LDW280M10265-1(SHOWN)
-2(OPP)
LDW280-10147-13(SHOWN)
-14(OPP)
G23-2-24(2)
GB511D-08-2 (HEAD NS)
GN512H-08
TRACE OF +Z85.380
MS2047
LDW280M52137-1(REF)
-Y11.521 (REF)
NAS1525-11
NAS1080D5
NAS1525-16
NAS1080D5
LDW280M10265-1(REF)
TRACE OF +Z79.727(REF)
NAS1525-4
NAS1080D5
LDW280M52137-1(REF)
-Y5.391
SEE NOTE 6
LDW

SECTION G-G SHOWN (SH3 ZONE 5
SECTION H-H OPP(SH3 ZONE 7B)
EXCEPT AS SHOWN

1011Z04 NAS 9-1100

CODE IDENT NO.26512
LDW280-52075 SH 4

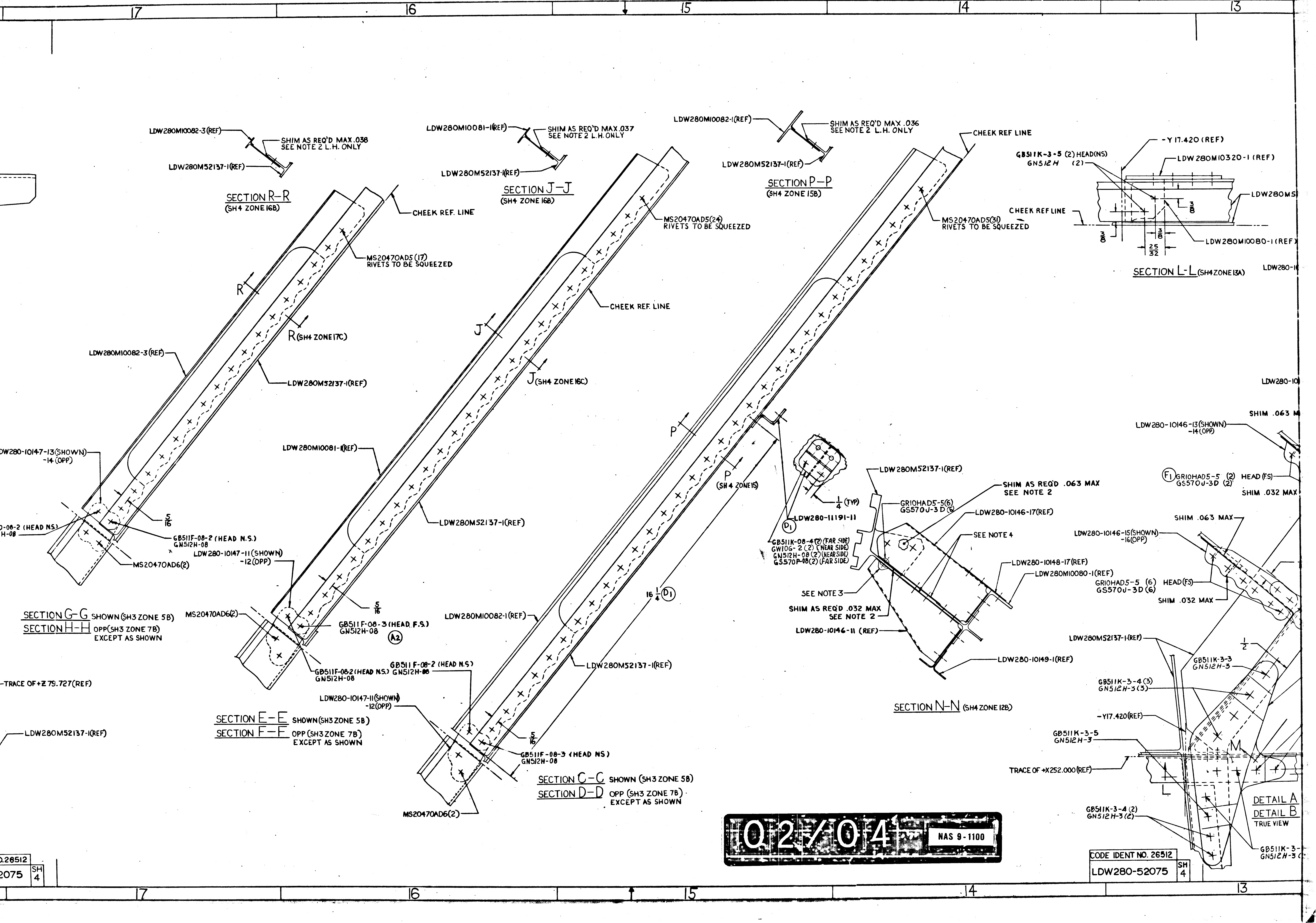

17
16
15
14
13
LDW280M10082-3(REF)
SHIM AS REQ'D MAX .038
SEE NOTE 2 L.H. ONLY
LDW280M52137-1(REF)
SECTION R-R
(SH4 ZONE 16B)
CHEEK REF. LINE
MS20470AD5 (17)
RIVETS TO BE SQUEEZED
R
R(SH4 ZONE 17C)
LDW280M10082-3 (REF)
LDW280M52137-1(REF)
DW280-10147-13(SHOWN)
-14 (OPP)
5/16
-08-2 (HEAD NS)
H-08
GB511F-08-2 (HEAD N.S.)
GN512H-08
MS20470AD6(2)
SECTION G-G SHOWN (SH3 ZONE 5B)
SECTION H-H OPP(SH3 ZONE 7B)
EXCEPT AS SHOWN
-TRACE OF +Z 79.727(REF)
LDW280M52137-1(REF)
LDW280M10081-1(REF)
SHIM AS REQ'D MAX .037
SEE NOTE 2 L.H. ONLY
LDW280M52137-1(REF)
SECTION J-J
(SH4 ZONE 16B)
MS20470AD5(24)
RIVETS TO BE SQUEEZED
CHEEK REF. LINE
J
J(SH4 ZONE 16C)
LDW280M10081-1(REF)
LDW280M52137-1(REF)
LDW280-10147-11 (SHOWN)
-12(OPP)
MS20470AD6(2)
5/16
GB511F-08-3 (HEAD F.S.)
GN512H-08
A2
GB511F-08-2 (HEAD N.S.)
GN512H-08
SECTION E-E SHOWN (SH3 ZONE 5B)
SECTION F-F OPP (SH3 ZONE 7B)
EXCEPT AS SHOWN
LDW280M10082-1(REF)
SHIM AS REQ'D MAX .036
SEE NOTE 2 L.H. ONLY
LDW280M52137-1(REF)
SECTION P-P
(SH4 ZONE 15B)
CHEEK REF LINE
MS20470AD5(31)
RIVETS TO BE SQUEEZED
P
P
(SH4 ZONE 15)
16 1/4 D1
LDW280M10082-1(REF)
LDW280M52137-1(REF)
GB511F-08-2 (HEAD N.S)
GN512H-08
LDW280-10147-11(SHOWN)
-12(OPP)
5/16
GB511F-08-3 (HEAD NS)
GN512H-08
SECTION C-C SHOWN (SH3 ZONE 5B)
SECTION D-D OPP (SH3 ZONE 7B)
EXCEPT AS SHOWN
MS20470AD6(2)
1/4 (TYP)
D1 LDW280-11191-11
GB511K-08-4(2) (FAR SIDE)
GW10G-2 (2) (NEAR SIDE)
GN512H-08 (2) (NEAR SIDE)
GS570P-08(2) (FAR SIDE)
LDW280M52137-1(REF)
SHIM AS REQ'D .063 MAX
SEE NOTE 2
GR10HAD5-5(6)
GS570J-3 D (6)
LDW280-10146-17(REF)
SEE NOTE 4
LDW280-10148-17(REF)
LDW280M10080-1(REF)
SEE NOTE 3
SHIM AS REQ'D .032 MAX
SEE NOTE 2
LDW280-10146-11 (REF)
LDW280-10149-1(REF)
SECTION N-N (SH4 ZONE 12B)
-Y 17.420 (REF)
GB511K-3-5 (2) HEAD(NS)
GN512H (2)
LDW280M10320-1 (REF)
LDW280MS
CHEEK REF LINE
3/8
3/8
3/8
25/32
LDW280M10080-1(REF)
SECTION L-L (SH4 ZONE 13A)
LDW280-1
LDW280-10
SHIM .063 M
LDW280-10146-13(SHOWN)
-14(OPP)
F1 GR10HAD5-5 (2) HEAD (F.S)
GS570J-3D (2)
SHIM .032 MAX
SHIM .063 MAX
LDW280-10146-15(SHOWN)
-16(OPP)
GR10HAD5-5 (6) HEAD(F.S)
GS570J-3D (6)
SHIM .032 MAX
LDW280M52137-1(REF)
1/2
GB511K-3-3
GN512H-3
GB511K-3-4 (3)
GN512H-3 (3)
-Y17.420(REF)
GB511K-3-5
GN512H-3
TRACE OF +X252.000(REF)
M
L
DETAIL A
DETAIL B
TRUE VIEW
GB511K-3-4 (2)
GN512H-3 (2)
GB511K-3-
GN512H-3 (
0.26512
2075 SH 4
CODE IDENT NO. 26512
LDW280-52075 SH 4

Q2/04

NAS 9-1100

-Y 17.420 (REF)
GB511K-3-5 (2) HEAD(NS)
GN512H (2)
LDW280M10320-1 (REF)
LDW280M52137-1 (REF)
CHEEK REF LINE
LDW280M10080-1 (REF)
3/8
25/32
SECTION L-L (SH4 ZONE 13A)
LDW280-10146-13(SHOWN) -14(OPP)
GR10HAD5-5 (6) HEAD (FS)
GS570J-3D (6)
LDW280-10146-17(SHOWN) -18(OPP)
MS20470AD5(4)
SHIM .063 MAX
SHIM .032 MAX
N
N (SH4 ZONE 14A)
M (SH4 ZONE 11A)
F1 GR10HAD5-5 (2) HEAD (FS)
GS570J-3D (2)
AS REQD .063 MAX
NOTE 2
-17(REF)
LDW280-10146-15(SHOWN) -16(OPP)
280-10148-17 (REF)
LDW280M10080-1(REF)
5/16 (TYP)
LDW280M10080-1(SHOWN) -2(OPP)
LDW280-10148-17(4)
5/8 (TYP)
LDW280M52137-1(REF)
-10149-1(REF)
GB511K-3-3
GN512H-3
1/2
GB511K-3-4 (3)
GN512H-3(3)
MS20470AD5(4)
LDW280M10320-1(SHOWN) -2(OPP)
GB511K-3-4 (2)
GN512H-3 (2)
-Y17.420(REF)
GB511K-3-5
GN512H-3
CE OF +X252.000(REF)
M
5/8
L
L (SH4 ZONE 13C)
DETAIL A SHOWN (SH3 ZONE 5B)
DETAIL B OPP (SH3 ZONE 7B)
TRUE VIEW
GB511K-3-4 (2)
GN512H-3(2)
GB511K-3-6(3)
GN512H-3 (3)
GB511K-3-2(3)
GN512H-3(3)
LDW280-10146-13(REF)
LDW280-10146-17(REF)
LDW280M52137-1(REF)
MS20470AD5 (2)
LDW280-10146-11(SHOWN) -12 (OPP)
E-19 REF D2 (L.H. ONLY)
E-19 REF D2 (R.H. ONLY)
LDW280-10146-12(SHOWN) -11 (OPP) A5
MS20470AD5(2)
LDW280-51317-3(SHOWN) -4 (OPP) E1 F1
MS20470AD5(35) RIVETS TO BE SQUEEZED
LDW280M10080-1(REF)
LDW280-10148-17(4)(REF)
GB511K-3-2(3)
GN512H-3(3)
LDW280-10146-13(REF)
MS20470AD5(15)
E-19 REF D2
LDW280-10149-1(SHOWN) -2 (OPP)
NAS1525-2 (3)
NAS1080D5 (3)
LDW280M10320-1(REF)
VIEW M-M (SH4 ZONE 11C) D2
2
E-19 REF D2
5/16
2 5/8 TRUE
5/16
MS20470AD5 (30) RIVETS TO BE SQUEEZED
NAS1525-3 (3)
NAS1080D5 (3)
+Y.775
1.550
1.530
+Y8.00 (REF)
Z 80.781 (JIGGED)
SHIM AS REQD .020 MAX (4 PLACES) (SEE NOTE 9)
X297.857 (JIGGED)
SHIM AS REQD .020 MAX 2 PLACES (SEE NOTE 9)
GB511K-08-3 (3)
GN512H-08 (3)
AZ
GB511K-08-4 (2)
GN512H-08 (2)
GS570P-08 (2)
GW10G-2 (2)
LDW280-10841(REF)
LDW280P11471-14(REF)
LDW280P11471-13(REF)
LDW280P11546-1(REF)
LDW320M11611-1 (REF)
TRACE OF X294.75
GR10HAD4 (2) MFG. HEAD N.S.
GS570J-1D (2)
GR10HAD5 (5) MFG. HEAD N.S.
GS570J-3D (5)
AZ
E3 DETAIL AY (SH 3 ZONE 6C) VIEW LOOKING AFT FULL SCALE
LDW280M10446(REF)
LDW280P11546(REF)
LDW280-10841-11 (REF)
LDW320M11605-1
GS570L-101-004 (2) (INSTALL SEAL WITH OPEN SIDE FACING AFT)
X294.750 (REF)
REAM .263/.261
CHAMFER .035/.025 X45° (ON LDW280-10841-1)
GS570J-21D
LDW320M11611-1
E3 SECTION AZ-AZ ZONE 6C SH3
+Z 87.180 (REF)
X 284.600 (REF)
X284.562 (REF)
LDW280-28247-1(REF)
X 272.160 (REF)
E1 SECTION AW-AW (ZONE 6B & 6C SH 3) HALF SCALE

CODE IDENT NO. 26512
LDW280-52075 SH 4

LEM
J 265
FULL

03/04 NAS 9-1100

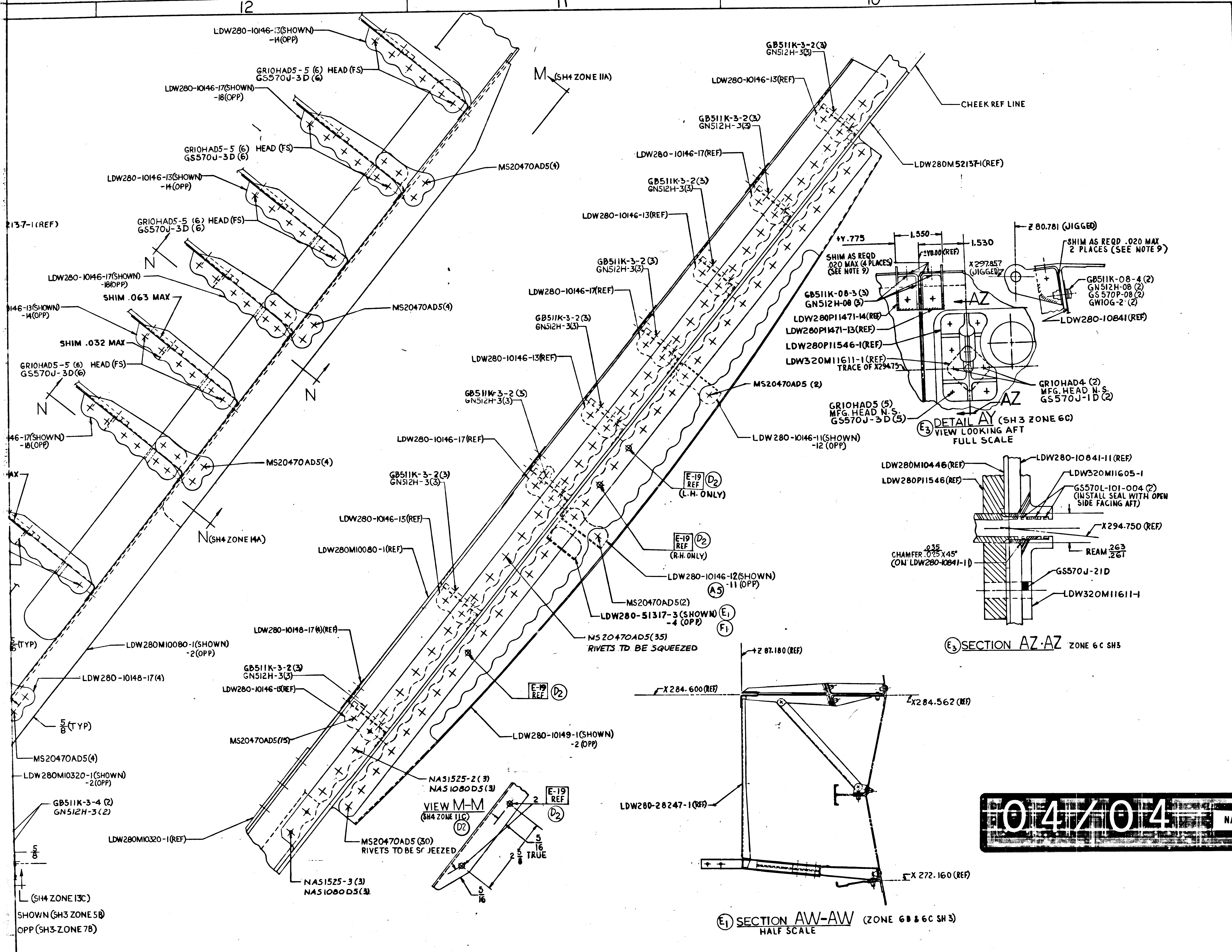
12
11
10
9
LDW280-10146-13(SHOWN) -14(OPP)
GR10HAD5-5 (6) HEAD (FS)
GS570J-3D (6)
LDW280-10146-17(SHOWN) -18(OPP)
M (SH4 ZONE 11A)
GR10HAD5-5 (6) HEAD (FS)
GS570J-3D (6)
MS20470AD5(4)
LDW280-10146-13(SHOWN) -14(OPP)
213.7-1(REF)
GR10HAD5-5 (6) HEAD (FS)
GS570J-3D (6)
N
LDW280-10146-17(SHOWN) -18(OPP)
SHIM .063 MAX
146-13(SHOWN) -14(OPP)
MS20470AD5(4)
SHIM .032 MAX
GR10HAD5-5 (6) HEAD (FS)
GS570J-3D(6)
N
N
46-17(SHOWN) -18(OPP)
MS20470AD5(4)
N (SH4 ZONE 14A)
5/8 (TYP)
LDW280M10080-1(SHOWN) -2(OPP)
LDW280-10148-17(4)
5/8 (TYP)
MS20470AD5(4)
LDW280M10320-1(SHOWN) -2(OPP)
GB511K-3-4 (2)
GN512H-3 (2)
5/8
LDW280M10320-1(REF)
L (SH4 ZONE 13C)
SHOWN (SH3 ZONE 5B)
OPP (SH3 ZONE 7B)
GB511K-3-2(3)
GN512H-3(3)
LDW280-10146-13(REF)
CHEEK REF LINE
GB511K-3-2(3)
GN512H-3(3)
LDW280M52137-1(REF)
LDW280-10146-17(REF)
GB511K-3-2(3)
GN512H-3(3)
LDW280-10146-13(REF)
GB511K-3-2(3)
GN512H-3(3)
LDW280-10146-17(REF)
GB511K-3-2(3)
GN512H-3(3)
LDW280-10146-13(REF)
MS20470AD5 (2)
GB511K-3-2(3)
GN512H-3(3)
LDW280-10146-17(REF)
LDW280-10146-11(SHOWN) -12 (OPP)
E-19 REF (D2) (L.H. ONLY)
GB511K-3-2(3)
GN512H-3(3)
LDW280-10146-13(REF)
E-19 REF (D2) (R.H. ONLY)
LDW280M10080-1(REF)
LDW280-10146-12(SHOWN) (A5) -11 (OPP)
MS20470AD5(2)
LDW280-51317-3 (SHOWN) -4 (OPP) (E1) (F1)
LDW280-10148-17(4)(REF)
NS20470AD5(35) RIVETS TO BE SQUEEZED
GB511K-3-2(3)
GN512H-3(3)
LDW280-10146-13(REF)
E-19 REF (D2)
MS20470AD5(15)
LDW280-10149-1(SHOWN) -2 (OPP)
NAS1525-2 (3)
NAS1080D5(3)
VIEW M-M (SH4 ZONE 11C) (D2)
E-19 REF (D2)
2
5/16 TRUE
2 5/8
5/16
MS20470AD5(30) RIVETS TO BE SQUEEZED
NAS1525-3 (3)
NAS1080D5(3)
+Y.775
1.550
1.530
±Y0.00 (REF)
SHIM AS REQD .020 MAX (4 PLACES) (SEE NOTE 9)
X297.857 (JIGGED)
Z 80.781 (JIGGED)
SHIM AS REQD .020 MAX 2 PLACES (SEE NOTE 9)
GB511K-08-3 (3)
GN512H-08 (3)
AZ
GB511K-08-4 (2)
GN512H-08 (2)
GS570P-08 (2)
GW10G-2 (2)
LDW280-10841(REF)
LDW280P11471-14(REF)
LDW280P11471-13(REF)
LDW280P11546-1(REF)
LDW320M11611-1(REF)
TRACE OF X294.75
GR10HAD4 (2)
MFG. HEAD N.S.
GS570J-1D (2)
GR10HAD5 (5)
MFG. HEAD N.S.
GS570J-3D (5)
AZ
(E3) DETAIL AY (SH3 ZONE 6C)
VIEW LOOKING AFT
FULL SCALE
LDW280M10446(REF)
LDW280P11546(REF)
LDW280-10841-11(REF)
LDW320M11605-1
GS570L-101-004 (2) (INSTALL SEAL WITH OPEN SIDE FACING AFT)
X294.750 (REF)
REAM .263/.261
CHAMFER .035/.025 X45° (ON LDW280-10841-1)
GS570J-21D
LDW320M11611-1
(E3) SECTION AZ-AZ ZONE 6C SH3
Z 87.180 (REF)
X284.600 (REF)
X284.562 (REF)
LDW280-28247-1(REF)
X272.160 (REF)
(E1) SECTION AW-AW (ZONE 6B & 6C SH3)
HALF SCALE
6(3)
(3)

MANUFACTURING OPERATIONS
UNLESS OTHERWISE SPECIFIED
NOTES CHECKED ✓ APPLY TO THIS DWG.

PART NUMBER AND ALL OTHER MARKINGS IN REGION MARKED ☒ USE BOTH SIDES IF NECESSARY.

FILLET AND INSIDE CORNER RADII TOLERANCES
.016R TO .062R ± .010
.063R TO .250R ± .015
OVER .250R ± .030

DEPTH SHOWN FOR TAPPED HOLES IS FULL THDS. 2-3 IMP THDS. BEYOND PERMISSIBLE.

EXTERNAL THREAD LENGTH SHOWN INCLUDES 2 IMPERFECT THREADS MAX.

DO NOT CADMIUM PLATE & PAINT HOLES OR SURFACES MARKED WITH DOUBLE ASTERISK.

MISMATCH STEP OF ± .005 PERMISSIBLE DUE TO CHANGE OF CUTTERS AT INSIDE INTERSECTING SURFACES.

DIAMETERS MARKED MUST BE CONCENTRIC WITHIN FULL INDICATOR READING

HOLES MUST BE KEPT FREE OF CHROME PLATING SOLUTION.

ALL DIMENSIONS SHOWN TO BE MET AFTER CADMIUM PLATING. THICKNESS OF PLATE .0003 MIN. TO .0005 MAX. MIN. THICKNESS TO BE .0002 ON THREADED AREAS. NO ALLOWANCE FOR PLATING IN HOLES

125 √ SURFACE ROUGHNESS INCLUDING REAMED HOLES PER MIL-STD-10

200 √ FOR ALL DRILLED HOLES

REMOVE ALL BURRS. BREAK ALL EDGES .015-.031

INSPECTION INFORMATION MINIMUM PERMISSIBLE AVERAGE EDGE DISTANCE MARKED IS

SYMBOL √ DENOTES SURFACE TO BE MACHINED

UNLESS OTHERWISE SPECIFIED TOLERANCE ON FLANGES IS ± 1/32

LENGTHS OF AN, NAS & MS AL ALY RIVETS SHORTER THAN 1 INCH ARE NOT SPECIFIED.

TOLERANCE ON LOFTED DELINEATIONS IS

DWG SIZE 34 X 137

PRINTING INFO ONLY
FULL SIZE SHEET AREA (36 X 139)= 34.5 SQ. FT.
1/2 SIZE SHEET AREA (1/4 OF FULL)= 8.625 SQ. FT.

PRINT TRIM LINE

C
B
A

LDW280-52075 F

LDW280-52075 F

04/04 NAS 9-1100

GRUMMAN AIRCRAFT ENGRG CORP., BETHPAGE, L. I., NEW YORK

MODEL OR END ITEM	SIZE	CODE IDENT NO.		
LEM	J	26512	LDW280-52075	F
	SCALE FULL		SHEET 4.0C	

THIS IS AN ORIGINAL DRAWING

3FR×

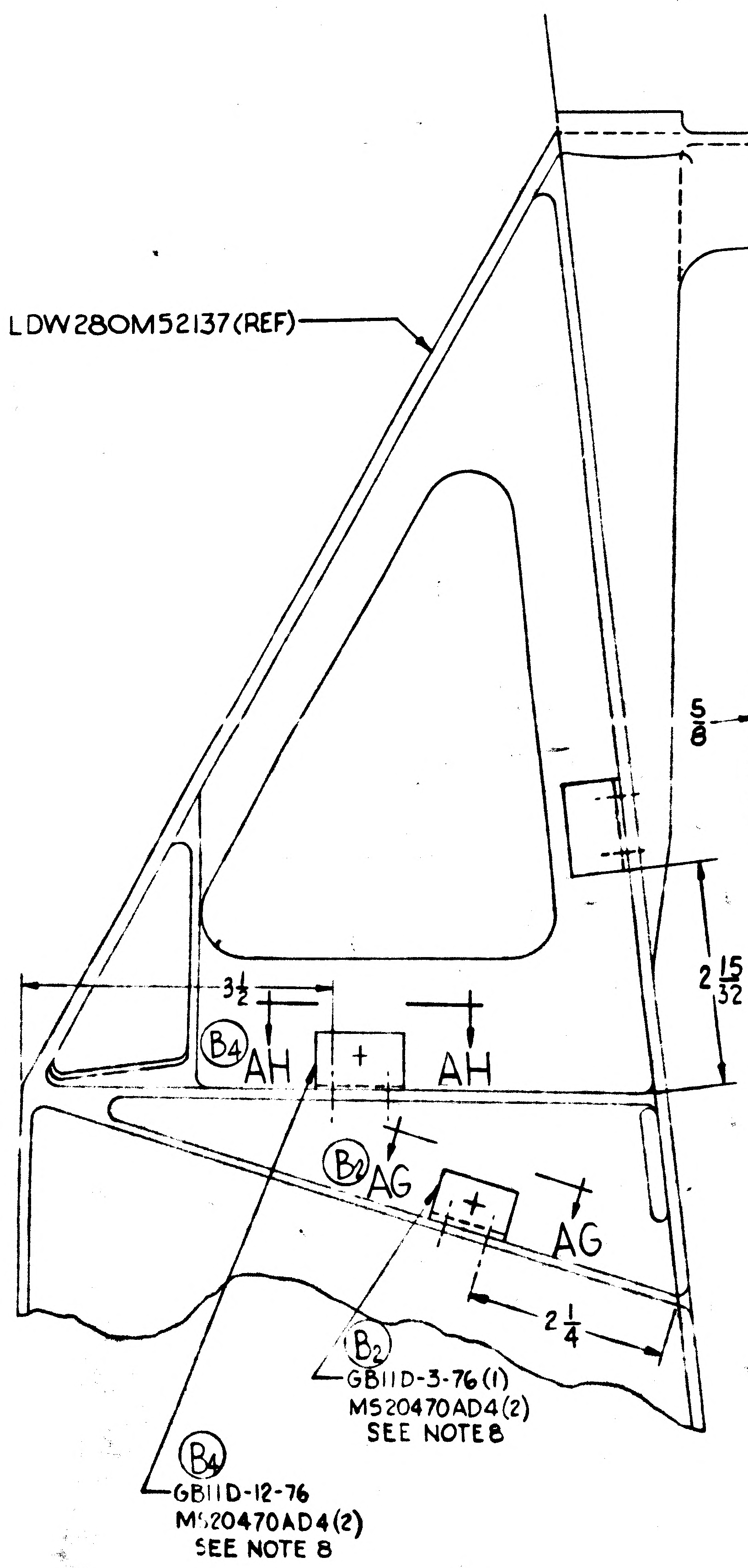
LDW280M52137(REF)
GB11E-3-76 (E4)
MS20470AD4(2)
SEE NOTE 8
5/8
2 15/32 (E4)
3 1/2
(B4) AH AH
(B2) AG AG
2 1/4
(B2)
GB11D-3-76(1)
MS20470AD4(2)
SEE NOTE 8
(B4)
GB11D-12-76
MS20470AD4(2)
SEE NOTE 8

VIEW AE-AE SH 3 ZONE 6C

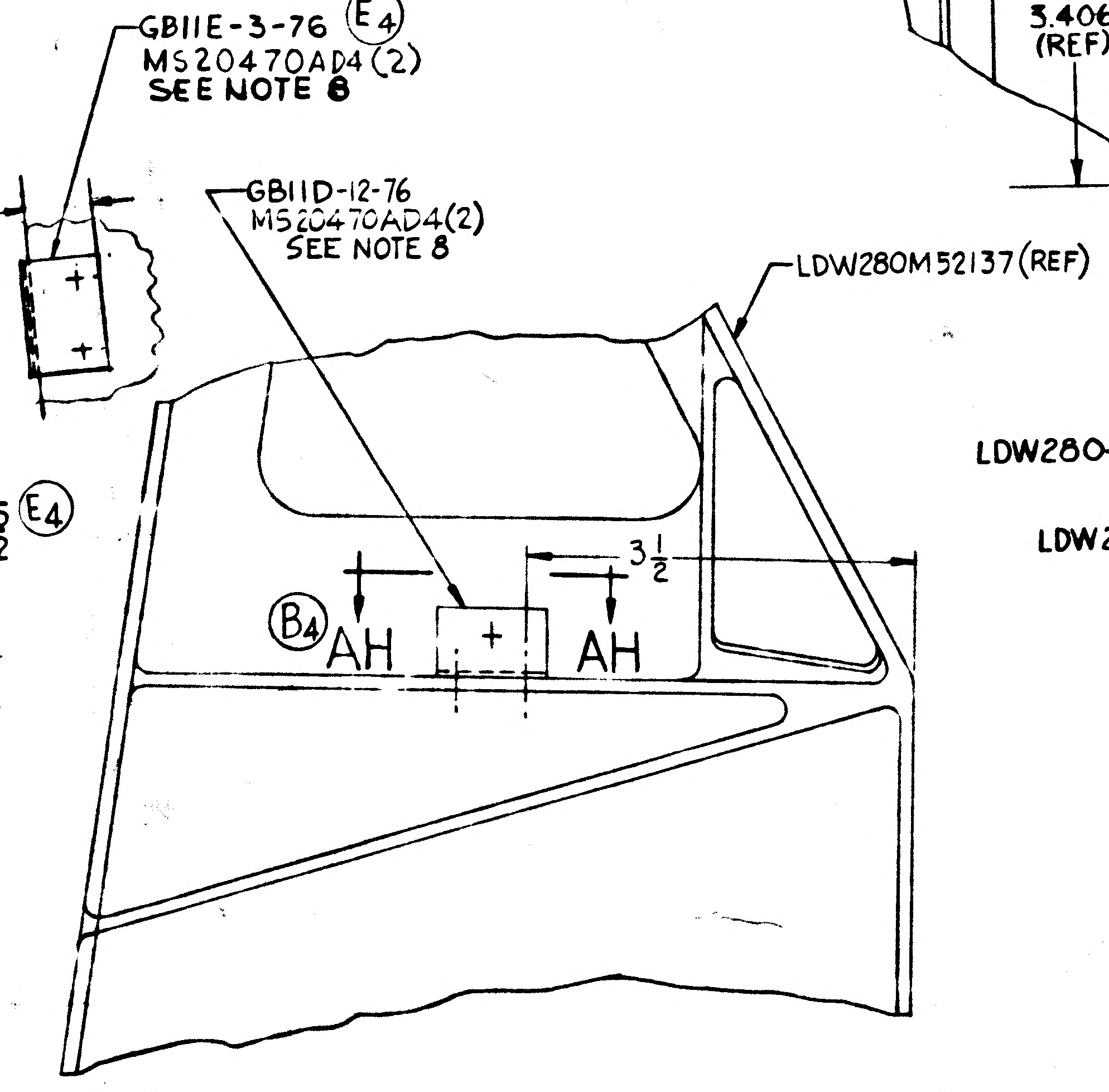
GB11D-12-76
MS20470AD4(2)
SEE NOTE 8
LDW280M52137(REF)
3 1/2
(B4) AH AH

VIEW AF-AF
SH 3 ZONE 6C

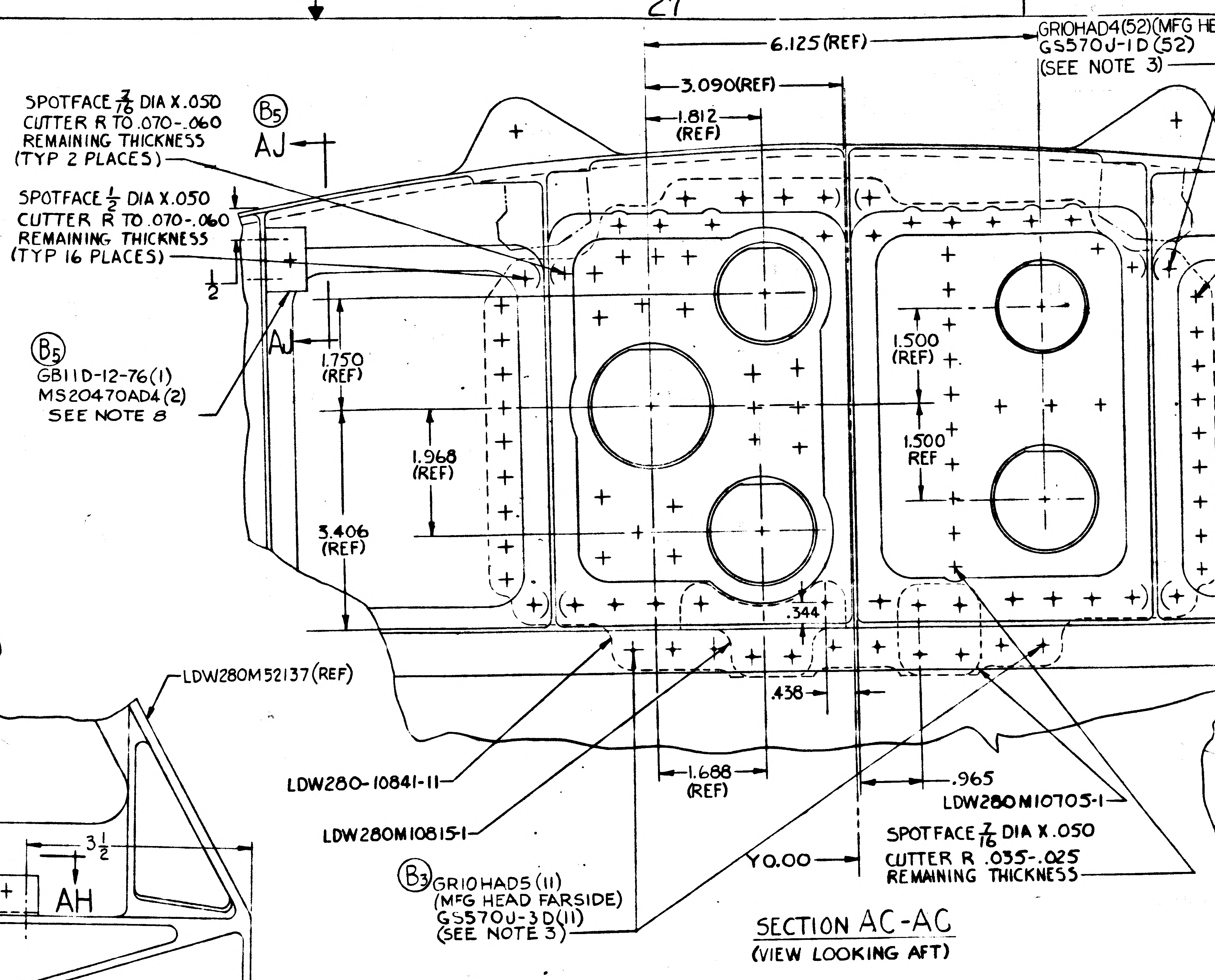
6.125(REF)
3.090(REF)
1.812 (REF)
GR10HAD4(52)(MFG HEAD N.S)
GS570J-1D(52)
(SEE NOTE 3)
SPOTFACE 7/16 DIA X.050
CUTTER R TO .070-.060
REMAINING THICKNESS
(TYP 2 PLACES)
(B5) AJ
SPOTFACE 1/2 DIA X.050
CUTTER R TO .070-.060
REMAINING THICKNESS
(TYP 16 PLACES)
1/2
AJ
(B5)
GB11D-12-76(1)
MS20470AD4(2)
SEE NOTE 8
1.750 (REF)
1.968 (REF)
3.406 (REF)
1.500 (REF)
1.500 REF
.344
.438
1.688 (REF)
.965
LDW280-10841-11
LDW280M10815-1
LDW280M10705-1
Y0.00
SPOTFACE 7/16 DIA X.050
CUTTER R .035-.025
REMAINING THICKNESS
(B3) GR10HAD5(11)
(MFG HEAD FARSIDE)
GS570J-3D(11)
(SEE NOTE 3)

SECTION AC-AC
(VIEW LOOKING AFT)

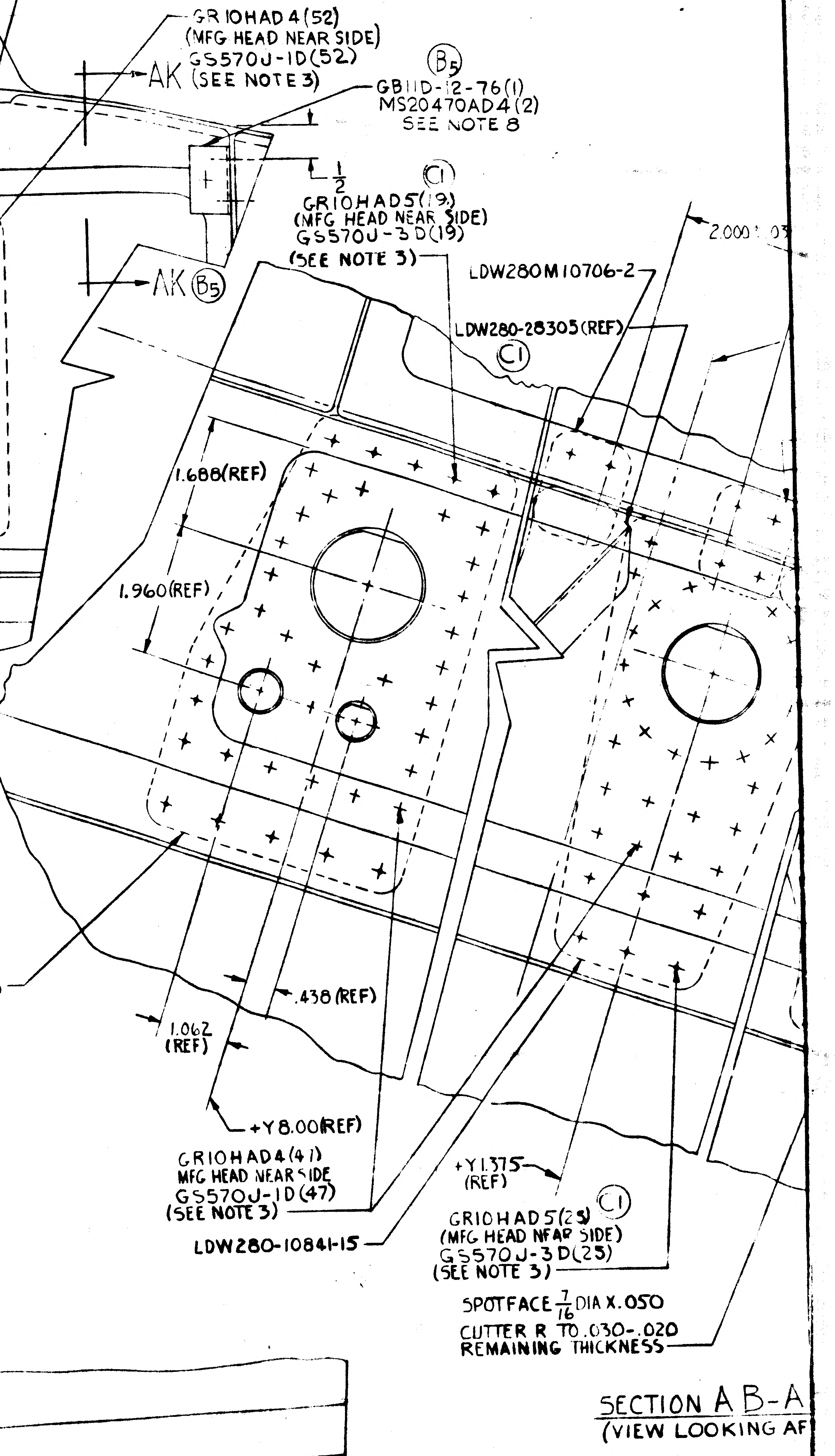
GR10HAD4(52)
(MFG HEAD NEAR SIDE)
GS570J-1D(52)
AK (SEE NOTE 3)
(B5)
GB11D-12-76(1)
MS20470AD4(2)
SEE NOTE 8
1/2
(C1)
GR10HAD5(19)
(MFG HEAD NEAR SIDE)
GS570J-3D(19)
(SEE NOTE 3)
LDW280M10706-2
2.000
AK (B5)
LDW280-28305(REF)
(C1)
1.688(REF)
1.960(REF)
LDW280-10841-13
.438(REF)
1.062 (REF)
+Y8.00(REF)
GR10HAD4(41)
MFG HEAD NEAR SIDE
GS570J-1D(47)
(SEE NOTE 3)
LDW280-10841-15
+Y1.375 (REF)
GR10HAD5(23) (C1)
(MFG HEAD NEAR SIDE)
GS570J-3D(23)
(SEE NOTE 3)
SPOTFACE 7/16 DIA X.050
CUTTER R TO .030-.020
REMAINING THICKNESS

SECTION AB-A
(VIEW LOOKING AF

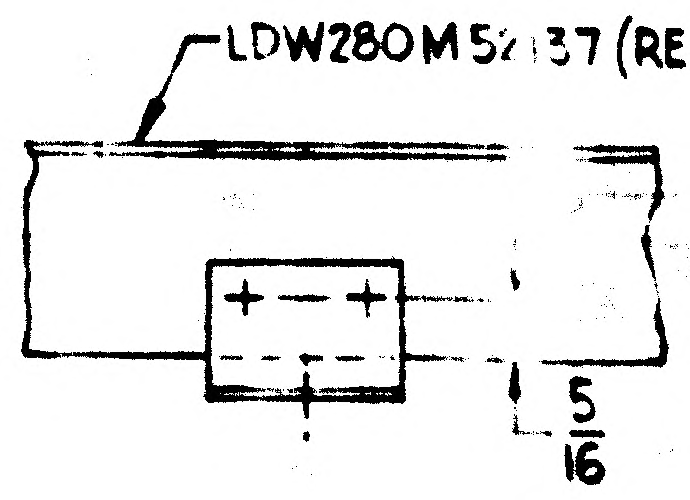
LDW280M52137(REF)
5/16

(B4)
SECTION AH-AH
2 PLACES

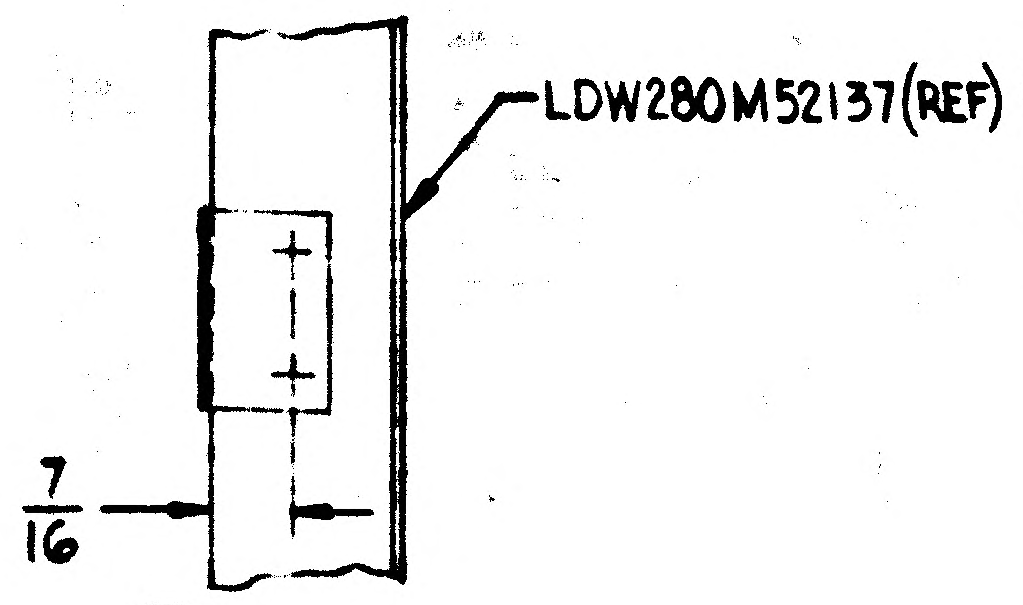
LDW280M52137(REF)
7/16

(B5)
SECTION AJ-AJ

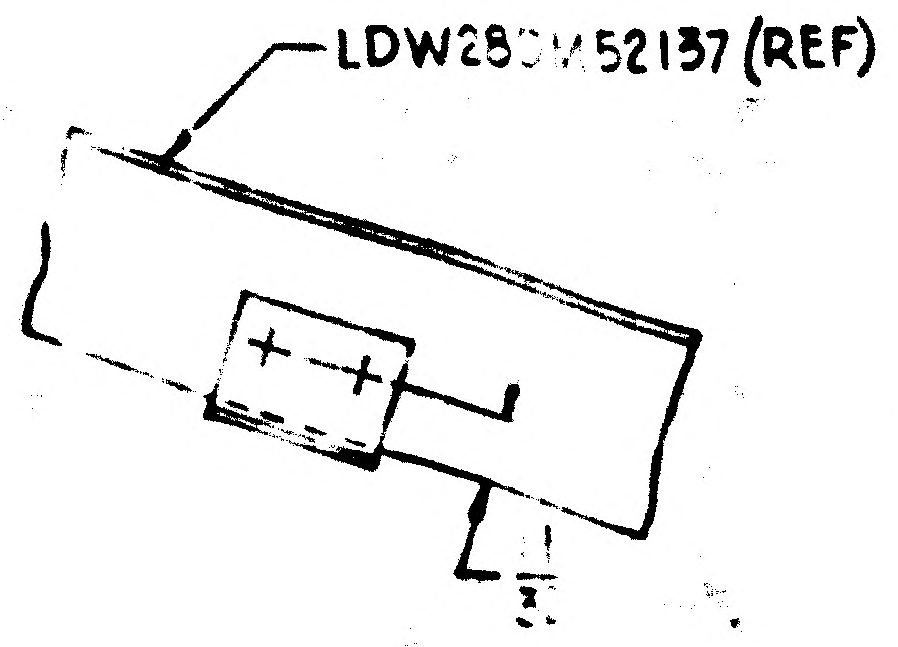
LDW280M52137(REF)

(B2)
SECTION AG-AG

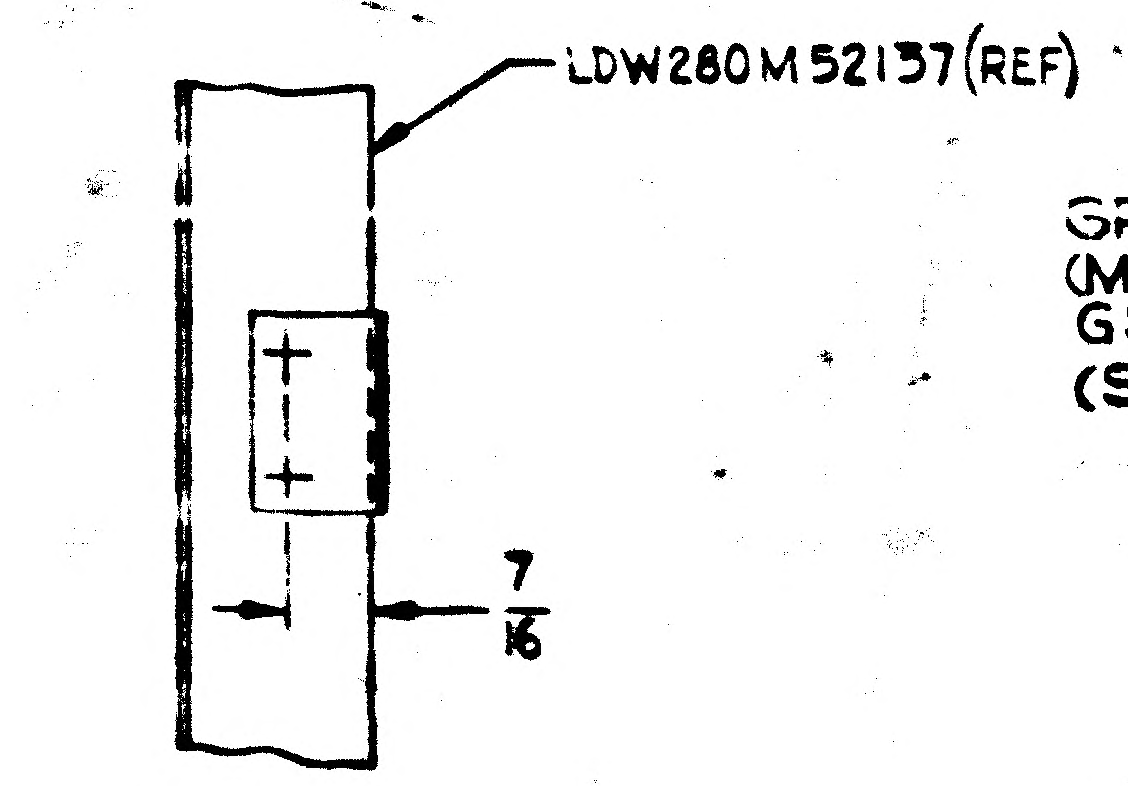
LDW280M52137(REF)
7/16

(B5)
SECTION AK-AK

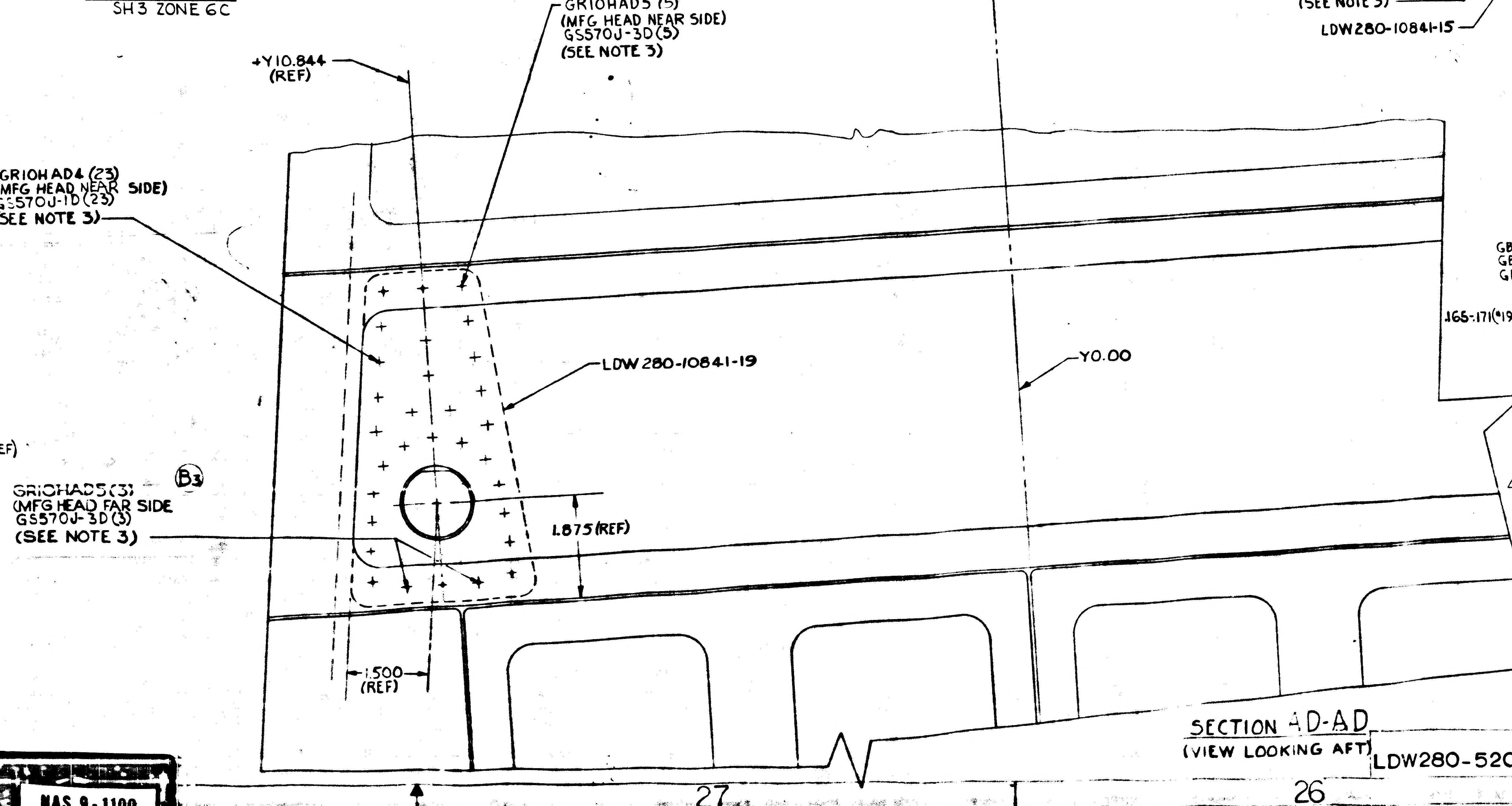
+Y10.844 (REF)
GR10HAD5(5)
(MFG HEAD NEAR SIDE)
GS570J-3D(5)
(SEE NOTE 3)
GR10HAD4(23)
(MFG HEAD NEAR SIDE)
GS570J-1D(23)
(SEE NOTE 3)
LDW280-10841-19
Y0.00
GR10HAD5(3) (B3)
(MFG HEAD FAR SIDE
GS570J-3D(3)
(SEE NOTE 3)
1.875(REF)
1.500 (REF)

SECTION AD-AD
(VIEW LOOKING AFT)

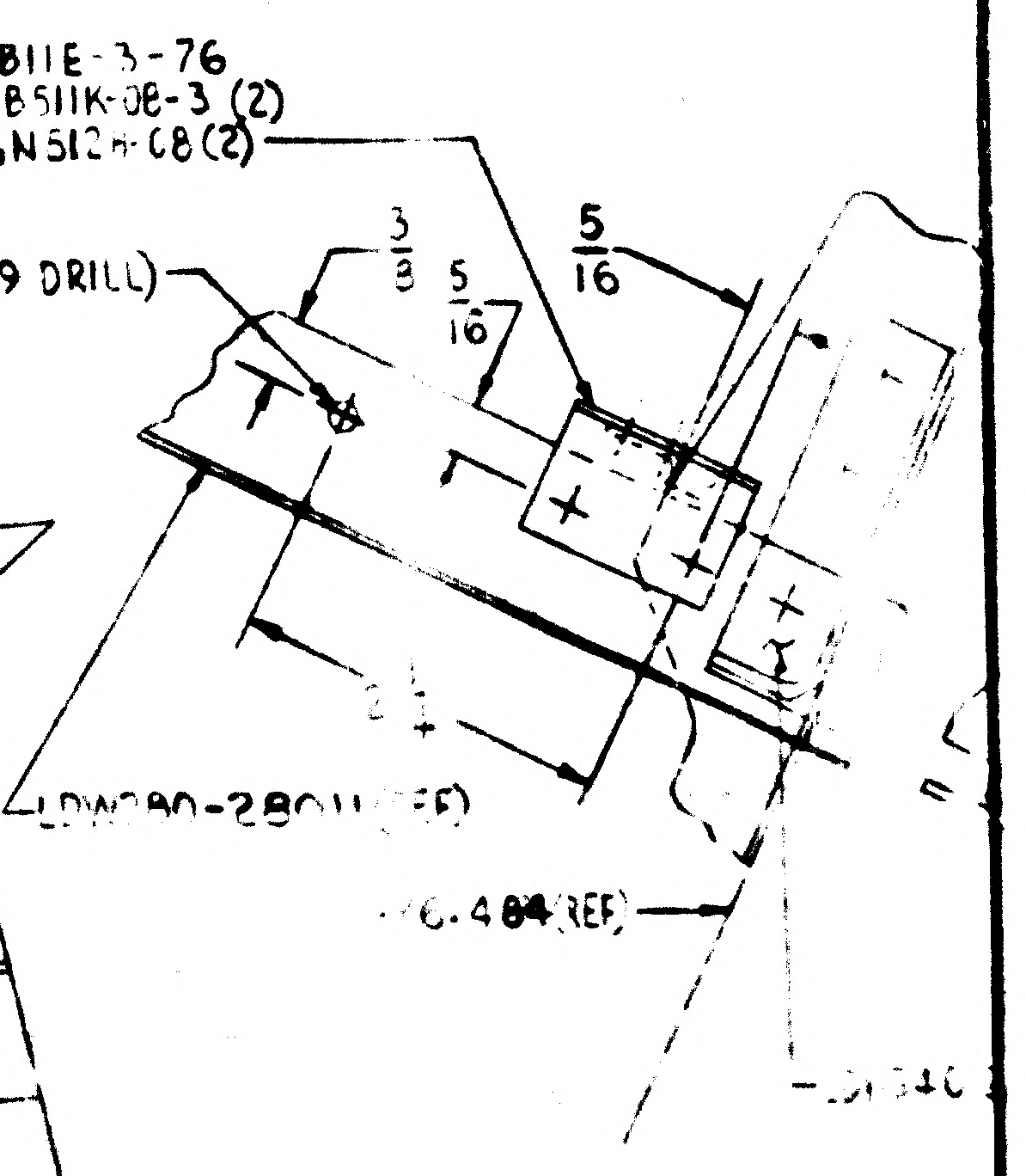
GB11E-3-76
GB511K-08-3(2)
GN512-08(2)
.165-.171(#19 DRILL)
3/8
5/16
5/16
LDW280-2801
6.484 REF

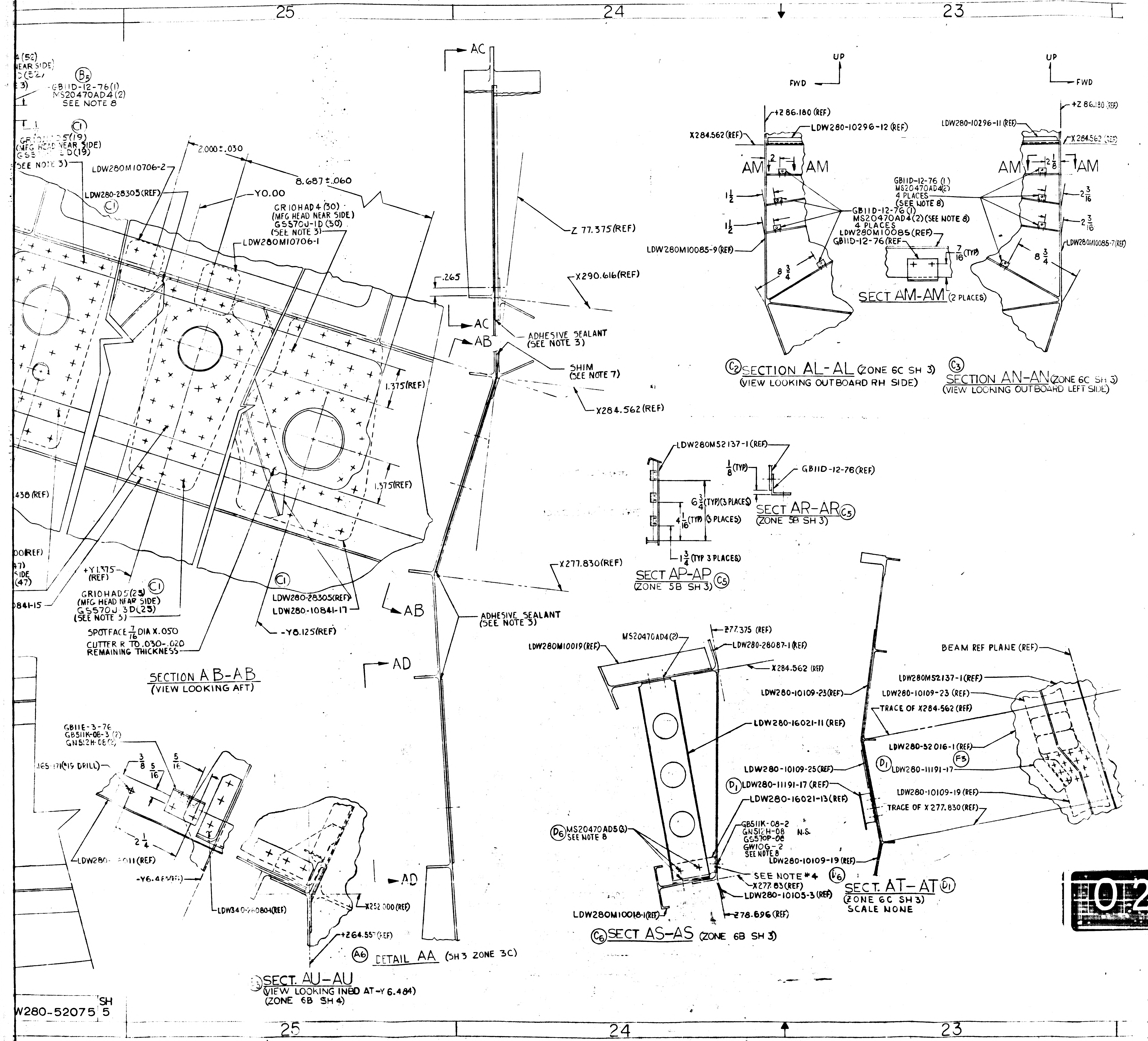
25
24
23
22
4 (52)
NEAR SIDE)
D (52)
3)
B5
GB11D-12-76(1)
MS20470AD4(2)
SEE NOTE 8
C1
GR10HAD5(19)
(MFG HEAD NEAR SIDE)
GS5 D(19)
(SEE NOTE 3)
LDW280M10706-2
2.000±.030
8.687±.060
LDW280-28305(REF)
C1
Y0.00
GR10HAD4(30)
(MFG HEAD NEAR SIDE)
GS570J-1D(30)
(SEE NOTE 3)
LDW280M10706-1
.265
.438(REF)
00(REF)
47)
SIDE
(47)
0841-15
+Y1.375
(REF)
C1
GR10HAD5(25)
(MFG HEAD NEAR SIDE)
GS570J-3D(25)
(SEE NOTE 3)
SPOTFACE 7/16 DIA X.050
CUTTER R TO .030-.020
REMAINING THICKNESS
C1
LDW280-28305(REF)
LDW280-10841-17
-Y8.125(REF)
1.375(REF)
1.375(REF)
AC
AC
AB
AB
AD
AD
Z 77.375(REF)
X290.616(REF)
ADHESIVE SEALANT
(SEE NOTE 3)
SHIM
(SEE NOTE 7)
X284.562(REF)
X277.830(REF)
ADHESIVE SEALANT
(SEE NOTE 3)
UP
FWD
UP
FWD
+Z 86.180 (REF)
X284.562(REF)
LDW280-10296-12 (REF)
AM
AM
2
1 1/2
1 1/2
LDW280M10085-9(REF)
8 3/4
GB11D-12-76 (1)
MS20470AD4(2)(SEE NOTE 8)
4 PLACES
GB11D-12-76 (1)
MS20470AD4(2)
4 PLACES
(SEE NOTE 8)
LDW280M10085(REF)
GB11D-12-76(REF)
7/16 (TYP)
+Z 86.180 (REF)
LDW280-10296-11 (REF)
X284.562 (REF)
AM
AM
2 1/8
2 3/16
2 3/16
LDW280M10085-7(REF)
8 3/4
LDW280M52137-1(REF)
1/8 (TYP)
GB11D-12-76(REF)
6 3/4 (TYP)(3 PLACES)
4 1/16 (TYP) (3 PLACES)
1 3/4 (TYP 3 PLACES)
GB11E-3-76
GB511K-08-3 (2)
GN512H-08(2)
.165-.171(#19 DRILL)
3/8
5/16
5/16
2 1/4
LDW280-8011(REF)
-Y6.484(REF)
LDW340-280804(REF)
X252.000(REF)
+264.557(REF)
Z77.375 (REF)
MS20470AD4(2)
LDW280M10019(REF)
LDW280-28087-1(REF)
X284.562 (REF)
LDW280-10109-23(REF)
LDW280-16021-11 (REF)
LDW280-10109-25(REF)
D1
LDW280-11191-17 (REF)
LDW280-16021-13(REF)
D6
MS20470AD5(3)
SEE NOTE 8
GB511K-08-2
GN512H-08
GS570P-08
GW10G-2
SEE NOTE 8
N.S.
LDW280-10109-19(REF)
SEE NOTE #4
D6
X277.83(REF)
LDW280-10105-3(REF)
LDW280M10018-1(REF)
Z78.696(REF)
BEAM REF PLANE (REF)
LDW280M52137-1(REF)
LDW280-10109-23 (REF)
TRACE OF X284.562 (REF)
LDW280-52016-1(REF)
F3
D1
LDW280-11191-17
LDW280-10109-19(REF)
TRACE OF X 277.830(REF)
D
C
B
A

SECTION AB-AB
(VIEW LOOKING AFT)

C2 SECTION AL-AL (ZONE 6C SH 3)
(VIEW LOOKING OUTBOARD RH SIDE)

SECT AM-AM (2 PLACES)

C3 SECTION AN-AN (ZONE 6C SH 3)
(VIEW LOOKING OUTBOARD LEFT SIDE)

SECT AR-AR C5
(ZONE 5B SH 3)

SECT AP-AP C5
(ZONE 5B SH 3)

A6 DETAIL AA (SH 3 ZONE 3C)

SECT. AU-AU
(VIEW LOOKING INBD AT -Y 6.484)
(ZONE 6B SH 4)

C6 SECT AS-AS (ZONE 6B SH 3)

SECT. AT-AT D1
(ZONE 6C SH 3)
SCALE NONE

W280-52075 SH 5

02/02

NAS 9-1100

MANUFACTURING OPERATIONS
UNLESS OTHERWISE SPECIFIED
NOTES CHECKED √ APPLY TO THIS DWG.

PART NUMBER AND ALL OTHER MARKINGS IN REGION MARKED ⊠ USE BOTH SIDES IF NECESSARY.	
FILLET AND INSIDE CORNER RADII TOLERANCES .016R TO .062R ± .010 .063R TO .250R ± .015 OVER .250R ± .030	
DEPTH SHOWN FOR TAPPED HOLES IS FULL THDS. 2-3 IMP THDS. BEYOND PERMISSIBLE.	
EXTERNAL THREAD LENGTH SHOWN INCLUDES 2 IMPERFECT THREADS MAX.	
DO NOT CADMIUM PLATE & PAINT HOLES OR SURFACES MARKED WITH DOUBLE ASTERISK.	
MISMATCH STEP OF ± .005 PERMISSIBLE DUE TO CHANGE OF CUTTERS AT INSIDE INTERSECTING SURFACES.	
DIAMETERS MARKED MUST BE CONCENTRIC WITHIN FULL INDICATOR READING	
HOLES MUST BE KEPT FREE OF CHROME PLATING SOLUTION.	
ALL DIMENSIONS SHOWN TO BE MET AFTER CADMIUM PLATING. THICKNESS OF PLATE .0003 MIN. TO .0005 MAX. MIN. THICKNESS TO BE .0002 ON THREADED AREAS. NO ALLOWANCE FOR PLATING IN HOLES	
125 √ SURFACE ROUGHNESS INCLUDING REAMED HOLES PER MIL STD 10	
200 √ FOR ALL DRILLED HOLES	
REMOVE ALL BURRS. BREAK ALL EDGES .015-.031	
INSPECTION INFORMATION MINIMUM PERMISSIBLE AVERAGE EDGE DISTANCE MARKED IS	
SYMBOL √ DENOTES SURFACE TO BE MACHINED	
UNLESS OTHERWISE SPECIFIED TOLERANCE ON FLANGES IS ± 1/32	
LENGTHS OF AN, NAS & MS AL ALY RIVETS SHORTER THAN 1 INCH ARE NOT SPECIFIED.	
TOLERANCE ON LOFTED DELINEATIONS IS	

DWG SIZE 34 X 88

PRINTING INFO ONLY
FULL SIZE SHEET AREA (36 X 90)= 21.8 SQ. FT.
1/2 SIZE SHEET AREA (1/4 OF FULL)= 5.4 SQ. FT.

PRINT TRIM LINE

LDW280-52075 F

LDW280-52075 F

	GRUMMAN AIRCRAFT ENGRG CORP., BETHPAGE, L. I., NEW YORK			
LEM	SIZE J	CODE IDENT NO. 26512	LDW280-52075	F
MODEL OR END ITEM	SCALE FULL		SHEET 5.00	

THIS IS AN ORIGINAL DRAWING 22

2 FR.

QTY PER ASSEMBLY -1	CODE IDENT	PART NO.	I&T	NOMENCLATURE OR DESCRIPTION	MATERIAL	GOVT SPEC	COML SPEC	STOCK SIZE	PROCESS SYM	FINISH NO.	ZONE
2		LDW280M10081-1	E	STIFFENER	SEE DWG						5B
1		LDW280M10080-2		STIFFENER							12B
1		LDW280M10080-1		STIFFENER							12B
1		LDW280-28095-1		HATCH BEAM INSTL							7B
1		LDW280-28087-1		STIFFENER INSTL							6C
1		LDW280-28072-2		STIFF & CAP INSTL							7C
1		LDW280-28072-1		STIFF & CAP INSTL							5C
1		LDW280-28056-1		BEAM INSTL							5A
1		LDW280-23130-1		RELIEF VALVE INSTL							6A
1		LDW280-23094-2		STIFFENER INSTL							7B
1		LDW280-23094-1		STIFFENER INSTL							5B
1		LDW280-10464-15		ANGLE							2A
1		LDW280-10464-13		ANGLE							1A
1		LDW280-10464-11		ANGLE							1A
2		LDW280-10299-13		CHANNEL							6C
2		LDW280-10299-11									6C
2		LDW280-10249-12									21A
2		LDW280-10249-11		CHANNEL							21A
1		LDW280-10149-2		STIFFENER ASSY							11A
1		LDW280-10149-1	E	STIFFENER ASSY	SEE DWG						11A

SYM OR NO.	PROCESS OR FINISH	GRUMMAN SPEC OR MILITARY SPEC	SYM OR NO.	PROCESS OR FINISH	GRUMMAN SPEC OR MILITARY SPEC	SYM OR NO.	PROCESS OR FINISH	GRUMMAN SPEC OR MILITARY SPEC

I & T: IDENTIFICATION AND TRACEABILITY IN ACCORDANCE WITH :

GRUMMAN AIRCRAFT ENGRG CORP, BETHPAGE, L. I., NEW YORK

SIZE B
CODE IDENT NO. 26512
LDW280-52075
SCALE NONE
SHEET 2.01

ENG 77.2 7-65

01

NAS 9-1100

ENG 32.1 REV 3-65

GRUMMAN AIRCRAFT ENGINEERING CORP.
CODE IDENT NO. 26512
ENGINEERING ORDER

DWG. NO. LEO 280
EO NO. 452
CONTROL INFO NO. LDW280A4986

DWG. NO.	CHG. NO	EFF*	ADD N/A	REQ'D/MOD
✓ LDW280-52075-1	G1	LM-2	LDW 320 - 51600 R/R STOWAGE MECHANISM INSTL.	1
✓ LDW280-53075-1	F8	LM-3	↕	↕
✓ LDW280-54075-1	E7	LM-4 THRU LM-15	↕	1

DETAIL SPEC REQ		CL II ENGRG CHG		CL I ENGRG CHG	

REASON FOR EO: TO ADD PARTS TO N/A

DESCRIPTION OF EO: FOR -1
ADDED N/A LDW320-51600 FOR EFF*

GAEC C EO RELEASE

MODEL	EFFECTIVITY: PROCURING ACTIVITY NO.	GAEC UNIT NO.	SUB CONTR UNIT NO.
LM	NOTED ABOVE		

DRAWING CHANGE REQD: REVISE DWG	RECORD EO	DISPOSITION OF PARTS: REWORK	SCRAP
✓		✓	

APPROVED BY		V.S.						
DATE	1/17/67	1-20-67		1/17/67	1-18		1/14/67	1/20/67
5	VDI	MECH ~~SUPPORT~~ SYS	RELIAB. GROUP	GROUP LEADER	STRESS GROUP	LIAISON ENGRG	PROJ ENGRG	

PRIORITY	DRAWING TITLE	DRAWING NO.	EO NO.
C	FACE ASSY - ASCENT STAGE	LEO 280	452

ISSUED BY R.P. OBERNDORFER X1156 SECTION VDI GROUP NO. 335 PL 35

01

NAS 9-1100

B

NG 32.2 REV 3 65

GRUMMAN AIRCRAFT ENGINEERING CORP.
CODE IDENT NO. 26512
ENGINEERING ORDER

DWG. NO. [illegible]		EO NO. G2
CONTROL INFO NO. LM-[illegible]-12233		

111 FLD (OM-1)
PILL UP EXISTIN[illegible]
RIV[illegible] (6 PLCS)
GR[illegible]-AD4 (REF)

— [illegible]-AD4 (3) REQ

(ADD)
SEAL WITH [illegible]
PER LSP14-141[illegible]
TO
LDW 3[illegible] (REF)

(ADD)
GR[illegible]-AD4 (2)
MF[illegible]-AD[illegible]
G[illegible] (2)

.2[illegible] C'BORE
X .15 C'BORE R
TO CLEAR UP
(2 PLCS)

IN FLD & B/M (OM-1)
(ADD) AN[illegible] D[illegible] (2)
UNDER [illegible]
[illegible] IT [illegible]
[illegible] TRIM [illegible] AS
[illegible] BOND WITH
EPON 934
LSP14-[illegible]
CURE [illegible]

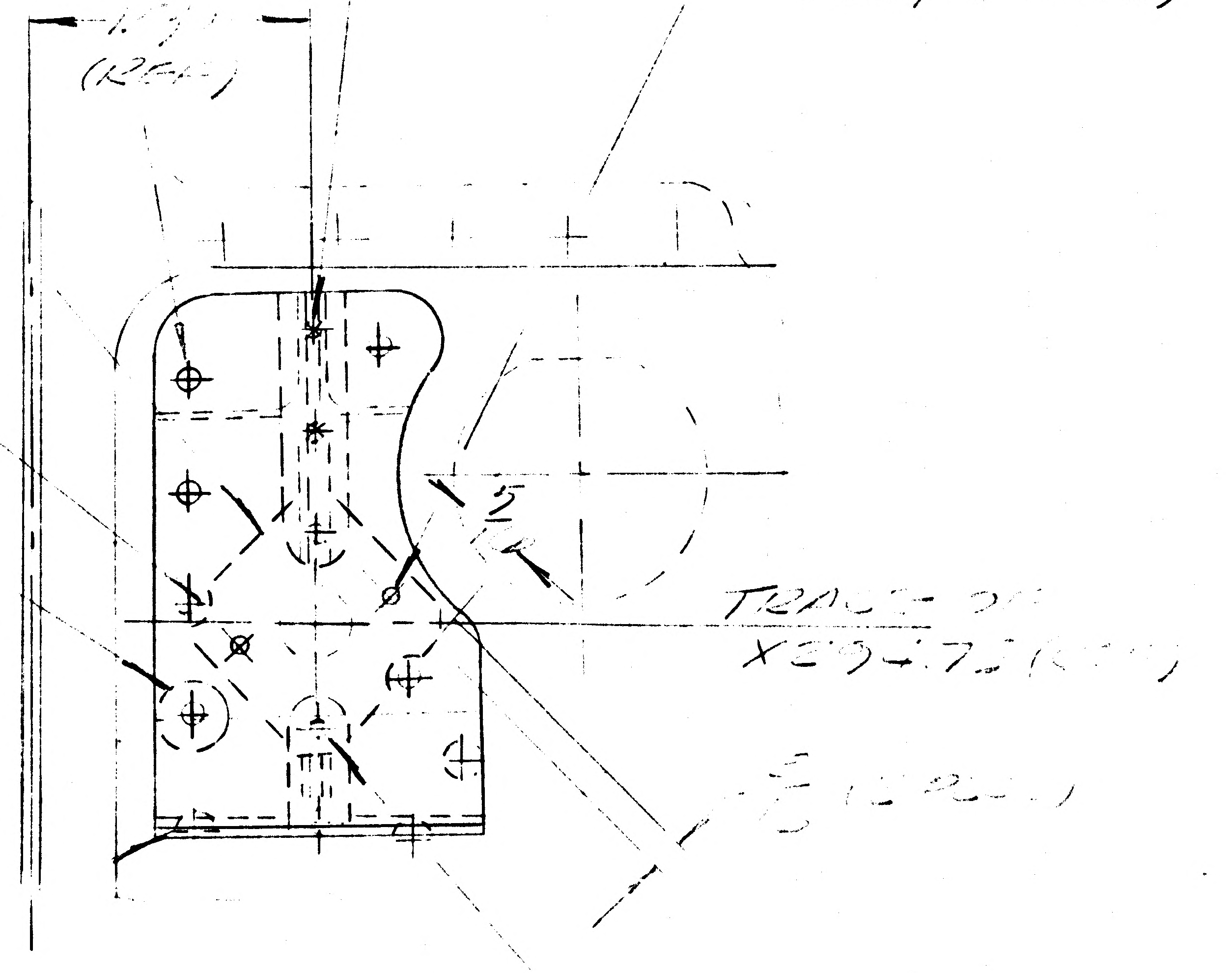

.250 C'BORE
X .0[illegible] C'BORE R
.070 REMAINING
THK ON LOWER
P115[illegible]-1 F[illegible]
3 PLCS (TO CLEAR
HD[illegible] OF EXIST[illegible]
RIV[illegible]) (3 PLCS)

VIEW [illegible] AFT
(REF)

PULL UP EXISTING
RIVETS (2 PLCS)
GR[illegible]-AD4 (REF)

THIS IS A REVISION OF EO E3

DESCRIPTION OF EO (CONT'D)
A[illegible] SEAL [illegible] ETC

RELEASED BY LIAISON

DETAIL SPEC REQ	☐	CL II ENGRG CHG	☐	CL I ENGRG CHG	☐

3

REASON FOR EO	DESCRIPTION OF EO	GAEC C EO RELEASE
TO ENABLE [illegible] TO NEST [illegible] CORRECTLY ON [illegible]	REF EO [illegible] IN FLD (OM-1) ADDED [illegible] C'BORE [illegible] (3 PLCS) IN FLD & B/M (OM-1) ADDED AN[illegible] [illegible]	FR

MODEL	EFFECTIVITY: PROCURING ACTIVITY NO.	EFFECTIVITY: GAEC UNIT NO.	EFFECTIVITY: SUB CONTR UNIT NO.	DRAWING CHANGE REQD: REVISE DWG	DRAWING CHANGE REQD: RECORD EO	DISPOSITION OF PARTS: REWORK	DISPOSITION OF PARTS: SCRAP
LM		LM-[illegible]		✓		✓	

APPROVED BY	[illegible]			—	NM	[illegible]	[illegible]	[illegible]
DATE	2/[illegible]				1-26-67	1-26-67	2-[illegible]	2/2/67
/	[illegible]	SUPPORT	RELIAB GROUP	GROUP LEADER	STRESS GROUP	LIAISON ENGRG	PROJ ENGRG	~~GOVT~~

PRIORITY	DRAWING TITLE	DRAWING NO.	EO NO.
C	FA[illegible]		G2

ISSUED BY [illegible] SECTION ______ GROUP NO. ______ PL ______

01

NAS 9-1100

B

ENG 32.1 REV 3-65

GRUMMAN AIRCRAFT ENGINEERING CORP.
CODE IDENT NO. 26512
ENGINEERING ORDER EMF A

DWG. NO.	LEO 280	EO NO.	557
CONTROL INFO NO.	LM-3-4997		

THIS IS A REVISION OF LEO 280-452.
* "ADD" WAS "ADD N/A"

DRAWING NO.	CHG	EFFECT.	"ADD" *	REQD		REVISING CHG.
✓LDW280-52075-1	G1	LM-2(32)	LDW320-51600-1 R/R STOWAGE MECHANISM INSTL.	1		G3
LDW280-54075-1	E7	LM-4(34) THRU LM-15(45)	↓	↓		G1

DETAIL SPEC REQ	☐	CL II ENGRG CHG	✓	CL I ENGRG CHG	☐

3

REASON FOR EO: TO ADD PARTS TO DRAWING

REF. LEO 280-452 DESCRIPTION OF EO ON -1
ADDED LDW320-51600-1

GAEC EO RELEASE: C
R
JK

MODEL	PROCURING ACTIVITY NO.	GAEC UNIT NO.	SUB CONTR UNIT NO.
LM		NOTED	

DRAWING CHANGE REQD		DISPOSITION OF PARTS		APPROVED BY								
									BM			
				DATE	5/1/67				4-13-67	4-13-67	4-13-67	4-13-67
✓ REVISE DWG	RECORD EO	✓ REWORK	SCRAP	5	VDI	SUPPORT	RELIAB. GROUP	GROUP LEADER	STRESS GROUP	LIAISON ENGRG	PROJ ENGRG	~~GOVT~~

PRIORITY	DRAWING TITLE	DRAWING NO.	EO NO.
C	FACE ASSY - ASCENT STAGE	LEO 280	557

ISSUED BY LIAISON / VIC BOLLO x2151 SECTION VDI GROUP NO. 335 PL 25

01 NAS 9-1100

ENG 32.1 REV 3-65

GRUMMAN AIRCRAFT ENGINEERING CORP.
CODE IDENT NO. 26512
B
ENGINEERING ORDER

DWG. NO. LDW280-52075
EO NO. G4
CONTROL INFO NO. LDW280A 7001

ON -1, LDW280-28072-6 WAS LDW280-28072-2

DETAIL SPEC REQ	☐	CL II ENGRG CHG	✓	CL I ENGRG CHG	☐

LCD 1552

5

REASON FOR EO: REMOVAL OF PHYSICAL HAZARDS FROM THE CREW COMPT. REQD. REIDENTIFICATION OF LDW280-28072 BEAM INSTL. - THIS E.O. CHANGES NEXT ASSY.

DESCRIPTION OF EO: ON -1, LDW280-28072-6 WAS LDW280-28072-2

GAEC EO RELEASE: JK 5/23/67

MODEL	PROCURING ACTIVITY NO.	GAEC UNIT NO.	SUB CONTR UNIT NO.
LM		LM-2 (32)	

DRAWING CHANGE REQD: REVISE DWG ✓ RECORD EO

DISPOSITION OF PARTS: REWORK ✓ SCRAP

	VDI	SUPPORT	RELIAB. GROUP	GROUP LEADER	STRESS GROUP	LIAISON ENGRG	PROJ ENGRG	~~GOVT~~
APPROVED BY	WT			—	mjm		Dam	
DATE	5/23/67			—	5/25/67		5/25/67	5/27/67
1								

PRIORITY: C

DRAWING TITLE: FACE ASSEMBLY ASCENT STAGE CABIN

DRAWING NO.: LDW280-52075

EO NO.: G4

ISSUED BY F. STEINMETZ X6510 SECTION VDI GROUP NO. 335 PL 5

01

NAS 9-1100

01 NAS 9-1100

B

ENG 32.2 REV 3-65

GRUMMAN AIRCRAFT ENGINEERING CORP.
CODE IDENT NO. 26512
ENGINEERING ORDER *

DWG. NO. LDW280-52075	EO NO. G 5
CONTROL INFO NO. LDW280A-8162	

ON -1, ADD LDW280-16089-1 &
MS20470AD4(2)

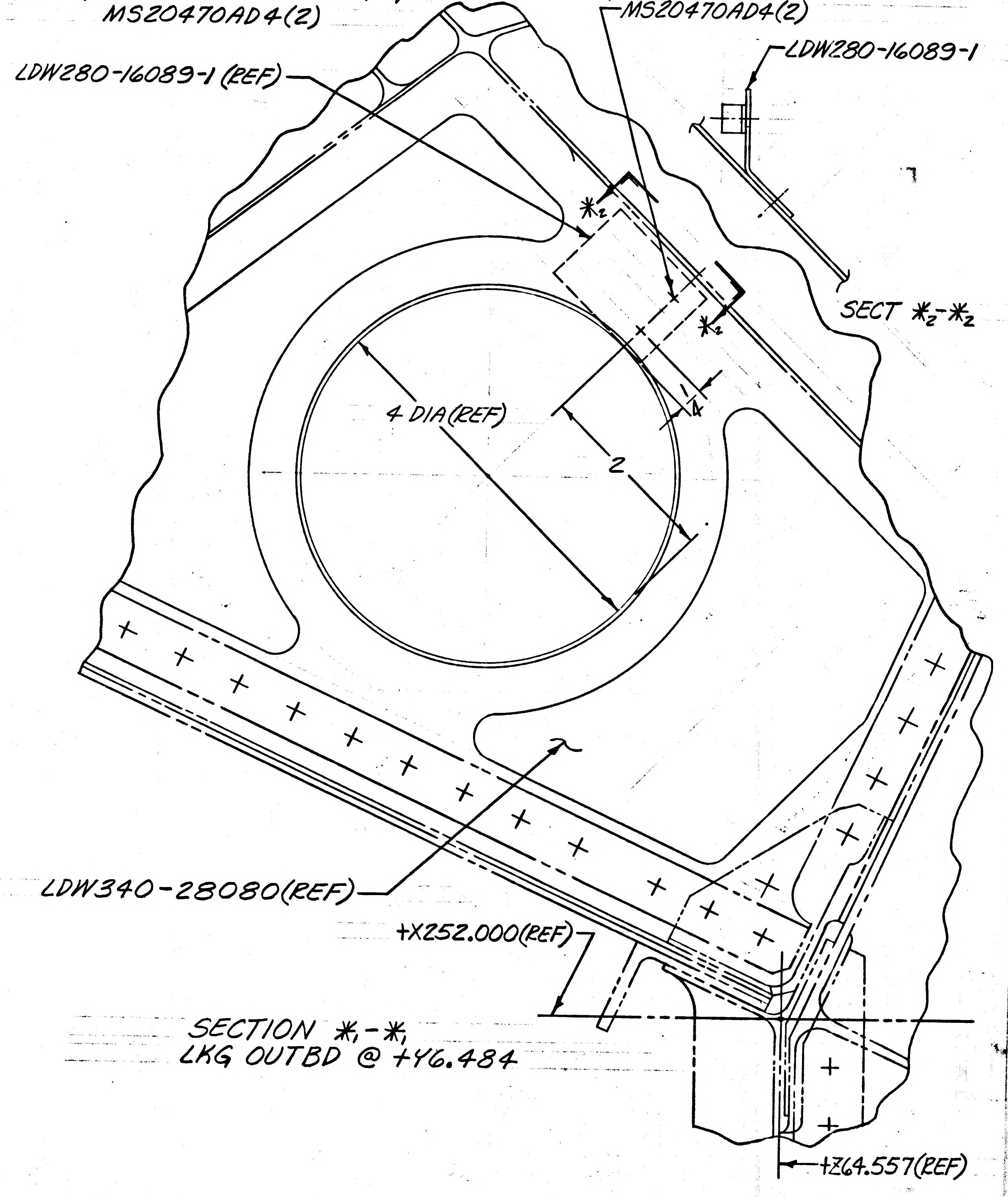

LDW280-16089-1 (REF)
MS20470AD4(2)
LDW280-16089-1
$*_2$
$*_2$
SECT $*_2$-$*_2$
4 DIA (REF)
2
LDW340-28080(REF)
+X252.000(REF)
SECTION $*_1$-$*_1$
LKG OUTBD @ +Y6.484
+Z64.557(REF)

($*_1$-$*_1$ & $*_2$-$*_2$ INDICATE NEXT SECTION LETTERS)

DETAIL SPEC REQ		CL II ENGRG CHG		CL I ENGRG CHG	✓	LCD 1481 CCA 598 & LCD 1606	5

REASON FOR EO: TO PROVIDE SUPPORT FOR ELECTRICAL CABLE PIGTAILS FROM PNL IV B

DESCRIPTION OF EO: ON -1, ADDED LDW280-16089-1 & MS20470AD4(2)

GAEC EO RELEASE: C JK 7/25/7

MODEL	PROCURING ACTIVITY NO.	GAEC UNIT NO.	SUB CONTR UNIT NO.
LM		LM-2(32)	

DRAWING CHANGE REQD		DISPOSITION OF PARTS	
REVISE DWG	RECORD EO	REWORK	SCRAP
✓		✓	

APPROVED BY								
DATE	7/21			7/21/67	7-21		7/24	7-24-67
	VDI	SUPPORT	RELIAB. GROUP	GROUP LEADER	STRESS GROUP	LIAISON ENGRG	PROJ ENGRG	~~GOVT~~

PRIORITY: C

DRAWING TITLE: FACE ASSY ASCENT STAGE CABIN

DRAWING NO.: LDW280-52075

EO NO.: G5

7/24
ISSUED BY Joe Solomon X1392 SECTION EQUIP LINES GROUP NO. 332 PL 25

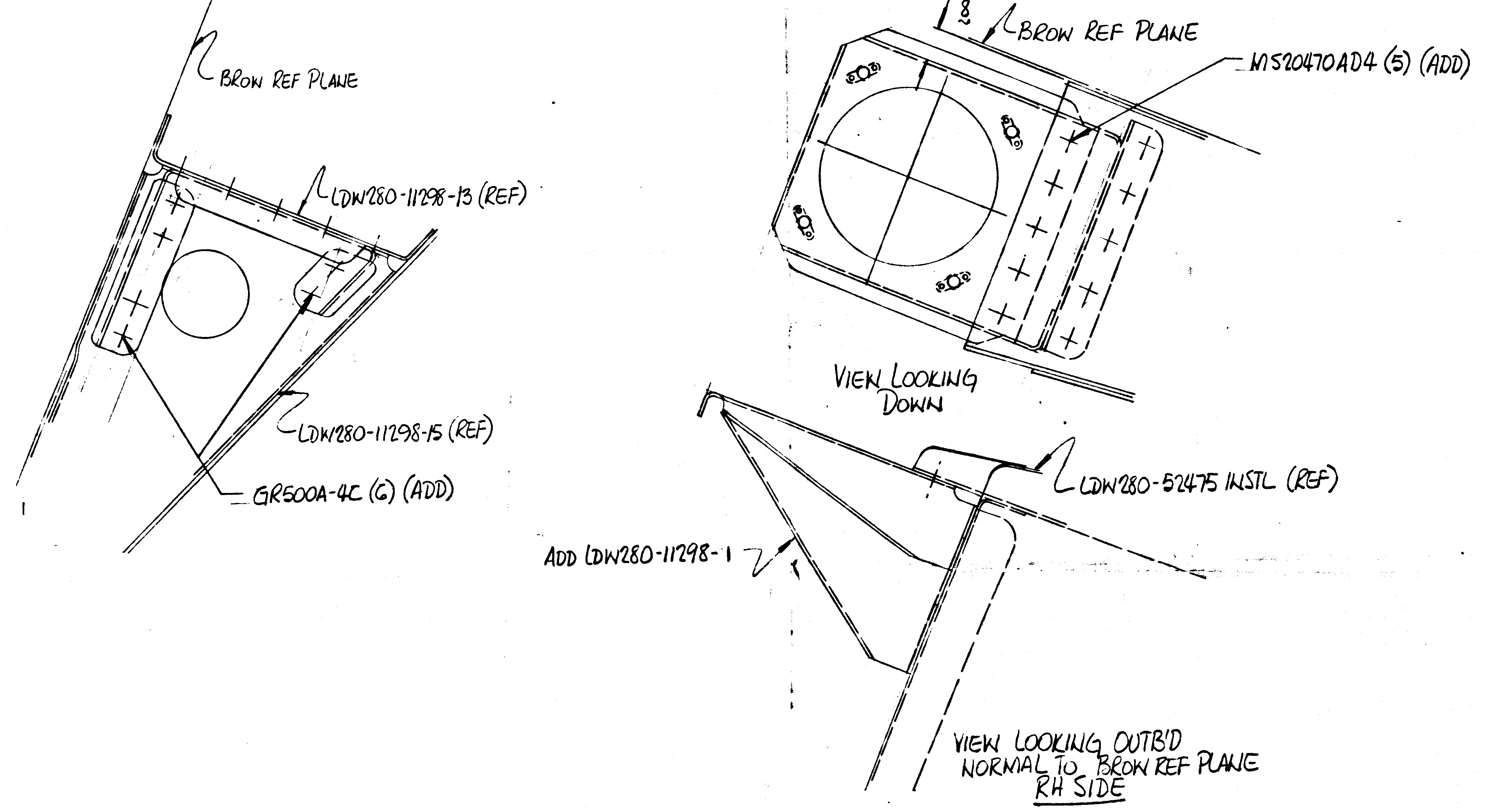
BROW REF PLANE
LDW280-11298-13 (REF)
LDW280-11298-15 (REF)
GR500A-4C (6) (ADD)
28013
BROW REF PLANE
MS20470AD4 (5) (ADD)
VIEW LOOKING DOWN
LDW280-52475 INSTL (REF)
ADD LDW280-11298-1
VIEW LOOKING OUTB'D NORMAL TO BROW REF PLANE RH SIDE

FULL SIZE 24 x 18 = 3 SQ FT
1/4 SIZE = 1 SQ FT

DETAIL SPEC REQD		CLASS II ENGRG CHG	✓	CLASS I ENGRG CHG		LCD 1784	CONTROL INFO NO. LM-5-13682

REASON FOR EO	DESCRIPTION OF EO	Ⓔ GRUMMAN EO RELEASE
PROVIDE CLEARANCE FOR FUSE INSTL.	ADDED LDW280-11298-1 ON -1 INSTL, MS20470-AD4 (5) & GR500A-4C (6)	JM

MODEL	EFFECTIVITY PROCURING ACT. NO.	EFFECTIVITY GAEC UNIT NO.	EFFECTIVITY SUB CONTR UNIT NO.
LM		LM2 (3V)	

DRAWING REVISION REQD: REVISE DWG	DRAWING REVISION REQD: RECORD EO	DISPOSITION OF PARTS: REWORK	DISPOSITION OF PARTS: SCRAP	BY / DATE	SUPPORT	RELIAB GROUP	GROUP LEADER	STRESS GROUP	LIAISON ENGRG	PROJ ENGR	GOV'T
✓		✓		JAP 11/21/67 VDI				GW 11-21-67	CH 11-17-67	JAP 11/21/67	11-21-67

PRIORITY	DRAWING TITLE	ENGINEERING ORDER DRAWING NO.	EO NO.
C	FACE ASSY A/S CABIN	LDW280-52075	G6

ISSUED BY ROSADO SALVADOR SECTION VDI GROUP NO. 335 PL 25

CODE IDENT NO. 26512

GRUMMAN AIRCRAFT ENGINEERING CORP
BETHPAGE, L. I., N. Y.

ENG 32.3 REV 3-65

01

NAS 9-1100

ENG 32.1 REV 3-65

GRUMMAN AIRCRAFT ENGINEERING CORP.
CODE IDENT NO. 26512

ENGINEERING ORDER

DWG. NO. LDW280-52075
EO NO. G7
CONTROL INFO NO. LM5-17505

THIS IS A REVISION OF
EO G6
ON EO G6 CHANGE
GR500A-4C(6) TO MS20470AD4(6)
AS SHOWN

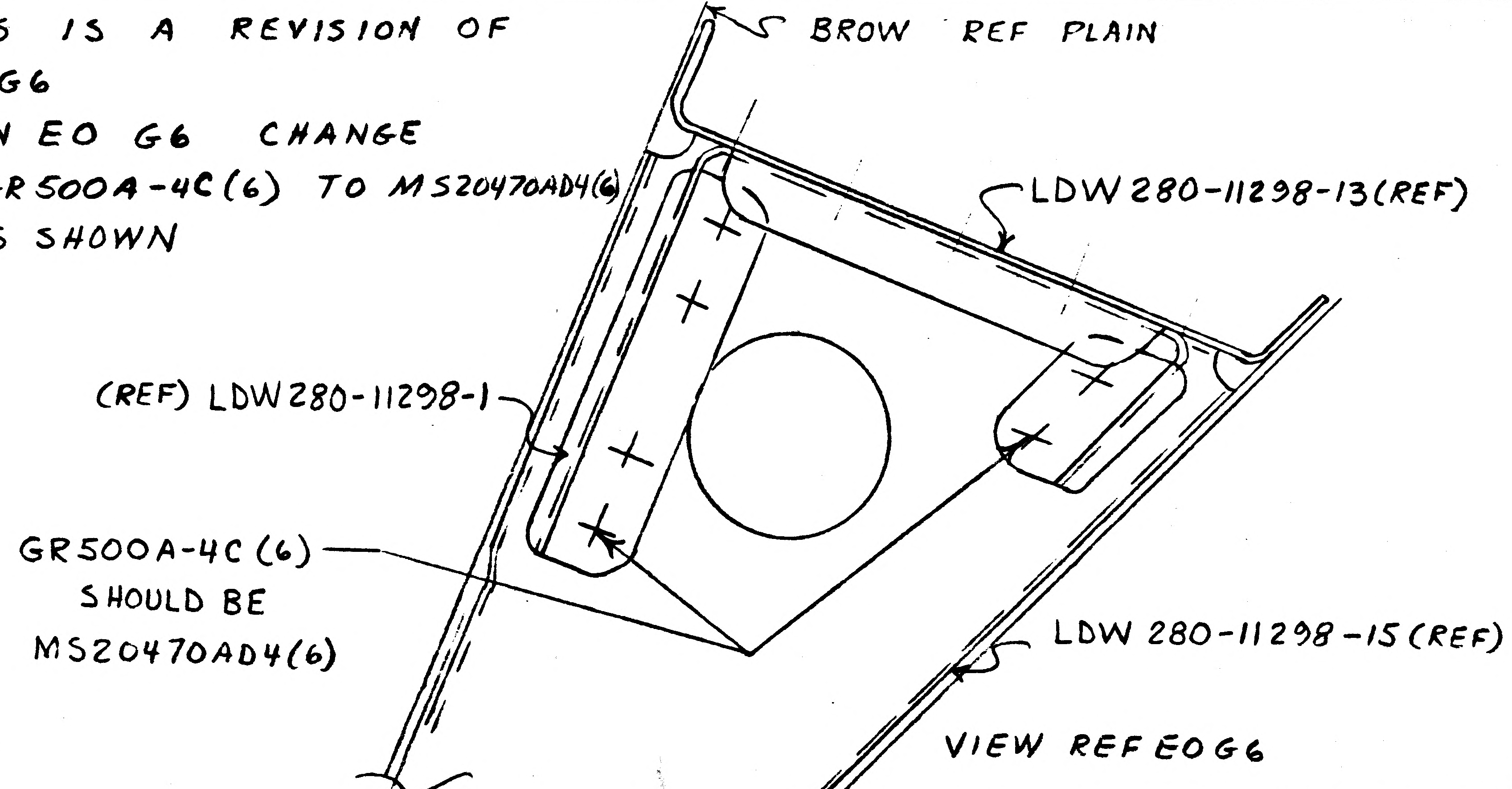
BROW REF PLAIN
LDW 280-11298-13(REF)
(REF) LDW280-11298-1
GR500A-4C(6) SHOULD BE MS20470AD4(6)
LDW 280-11298-15(REF)

VIEW REF EO G6

RELEASED BY LIAISON (5)

DETAIL SPEC REQ	☐	CL II ENGRG CHG	☑	CL I ENGRG CHG	☐	LCD 1784

REASON FOR EO: PROVIDE CLEARANCE FOR FUSE INSTL HUCK TOOL CANNOT BE USED IN AREA

DESCRIPTION OF EO: REF EO G6 ON- IINSTL F/D+B/M MS20470AD4(6) WAS GR500A-4C (6)

GAEC EO RELEASE: J/C 32 05 035

MODEL	EFFECTIVITY: PROCURING ACTIVITY NO.	GAEC UNIT NO.	SUB CONTR UNIT NO.
LM		LM-2(32)	

DRAWING CHANGE REQD: ☑ REVISE DWG ☐ RECORD EO
DISPOSITION OF PARTS: ☑ REWORK ☐ SCRAP

			SUPPORT	RELIAB. GROUP	GROUP LEADER	STRESS GROUP	LIAISON ENGRG	PROJ ENGRG	GOVT
APPROVED BY					—	M.B. JFJ		JAP	
DATE	12-4-67	12-4-67 VDI			—	12-8-67	12-7-67	12-21-67	12-9-67

PRIORITY: C
DRAWING TITLE: FACE ASSY A/S CABIN
DRAWING NO.: LDW280-52075
EO NO.: G7

ISSUED BY LIAISON J.GRASSIANO X86755 SECTION VDI GROUP NO. 335K PL 25

01

NAS 9-1100

ENG 32.1 REV 3-65

GRUMMAN AIRCRAFT ENGINEERING CORP.
CODE IDENT NO. 26512
ENGINEERING ORDER

DWG. NO. LDW280-52075
EO NO. G8
CONTROL INFO NO. LDW280B6886

IN F/D & B/M ON-1 INSTL

LDW280-28072-6-1 WAS LDW280-28072-6

LFM

DETAIL SPEC REQ ☐	CL II ENGRG CHG ☐	CL I ENGRG CHG ☑	LCD 2599 PKG 10

REASON FOR EO: STRESS CORROSION PREVENTION

DESCRIPTION OF EO: IN F/D & B/M LDW280-28072-6-1 WAS LDW280-28072-6

GAEC EO RELEASE: (5) 1/28 Ⓡ 1/30/69

MODEL	PROCURING ACTIVITY NO.	GAEC UNIT NO.	SUB CONTR UNIT NO.
	EFFECTIVITY		
LM	LFM 344	LM-2 (32)	

DRAWING CHANGE REQD		DISPOSITION OF PARTS	
REVISE DWG	RECORD EO	REWORK	SCRAP
✓		✓	

APPROVED BY				FDR/JN			JaP	
DATE	1/22/69			1/21/69	1-2		1/27/69	1-29-69
	VDI	~~SUPPORT~~ MATL	RELIAB. GROUP	GROUP LEADER	STRESS GROUP	LIAISON ENGRG	PROJ ENGRG	~~GOVT~~

PRIORITY	DRAWING TITLE	DRAWING NO.	EO NO.
C	FACE ASSEMBLY ASCENT STAGE ~ CABIN	LDW280-52075	G8

1-24-69
ISSUED BY T DALY X86048 SECTION VDI GROUP NO. 335 PL 25

01 NAS 9-1100

LDW280-52144 A

MODEL OR END ITEM	NEXT ASSY	MODULE OR SER NO.	REQD PER MODULE OR END ITEM
PART NO.		GAEC SCH NO.	

MODEL OR END ITEM	NEXT ASSY	MODULE OR SER NO.	REQD PER MODULE OR END ITEM
PART NO.		GAEC SCH NO. 311	

MODEL OR END ITEM	NEXT ASSY	MODULE OR SER NO.	REQD PER MODULE OR END ITEM
LEM	LDW280-52002	LEM2 (32)	2
PART NO. LDW280-52144-1		GAEC SCH NO.	

5

SH REV STATUS: FOR DESCRIPTION OF REV SEE SUBQ SH

SHEET	1.00	1.10	2.00		3.00			
REV	A	A	A		A			
SHEET								
REV								
SHEET								
REV								

LAST SECT LTR USED G

LAST DASH NO. USED -1

GRUMMAN REL INFO A

PRIM NO. VE(001) 6-28-6X

215 mp

UNLESS OTHERWISE SPECIFIED DIMENSIONS ARE IN INCHES.

TOLERANCE UNLESS SPECIFIED FRACTIONS - DECIMALS - ANGLES ±1/32 ±.020 ±1/2°

ORIG DWG AUTH

DETAIL SPEC REQUIREMENT

CLASS II ENGRG CHANGE

CLASS I ENGRG CHANGE

CONTRACT NO. NAS 9-1100

LINE ITEM # 1

DOCUMENTATION TYPE II

DRAWN BY BUCARIA-6-14-66

RELIABILITY

LAYOUT BY FISCH

CHECKED BY EG 6-16-66

GROUP LDR 6/24/66

VDI 6/25/66

STRUCTURES

WEIGHTS

PROJ ENGR Plunkett 28 June

REL GROUP Bott. 7-14-66

GRUMMAN AIRCRAFT ENGRG CORP
BETHPAGE, L. I., NEW YORK

MODULE INSTALLATION
ASCENT STAGE - MID SECTION
REACTION CONTROL SYSTEM TANK

SIZE B

CODE IDENT NO. 26512

LDW280-52144 A

SCALE NONE

SHEET 1.00 OF 4

ENG 77.1 12-65

01 NAS 9-1100

REVISIONS FOR CONTINUATION OF REVISIONS SEE SHEET ______

CHANGE LTR	ITEM NO.	SHEET NO.	ZONE	GRUMMAN INFO ONLY	DET SPEC	CLASS I	CLASS II	ENGRG ORDER	DESCRIPTION	EFFECTIVITY	DISPOSITION OF EXISTING PARTS		CHANGED BY AND DATE	ENGRG APPD	GOVT APPD
											REWORK	SCRAP			
A	1	1, 1.10 2 & 3						EO A1	IN FIELD & B/M FOR-1, NAS1304-7(2), NAS1304-6(6), NAS1304-5(2), NAS1304-4(1), NAS1304-3(8), NAS1304-2(24) [WAS NAS1304-3]. SH 1 OF 4 WAS 1 OF 3, ADDED SH 1.10	LEM-2	✓		J. ZALETEL 9-12-66		
	2						✓	EOA2 Ⓡ	IN FIELD ADDED SECT. G-G AND REVISED SECT. F-F. IN B/M REVISED QTY OF NAS1304-5 WAS 8 AND AN960D416L WAS 63.		✓	RL			

CHG APPROVED

LTR	GROUP LDR	VEH.DES.INT	STRUCTURES	WEIGHTS	RELIABILITY					
A										

GRUMMAN AIRCRAFT ENGRG CORP., BETHPAGE, L. I., NEW YORK

SIZE	CODE IDENT NO.		
B	26512	LDW280-52144	A
SCALE NONE		SHEET 1.10	

ENG 77.16 3-66

01 NAS 9-1100

QTY PER ASSEMBLY							CODE IDENT	PART NO.	I&T	NOMENCLATURE OR DESCRIPTION	MATERIAL	GOVT SPEC	COML SPEC	STOCK SIZE	PROCESS SYM	FINISH NO.	ZONE
						59		AN960D416L	E	WASHER	STD PART						
						2		NAS1304-7		BOLT							
						7		NAS1304-6		BOLT							
						6		NAS1304-5		BOLT							
						9		NAS1304-4		BOLT							
						8		NAS1304-3		BOLT							
						27		NAS1304-2		BOLT	STD PART						
						1		LDW330-52005-1		MODULE ASSY	SEE DWG						
								LDW280-52144-1	E	MODULE INSTL					NONE	NONE	5A
						—1											

SYM OR NO.	PROCESS OR FINISH	GRUMMAN SPEC OR MILITARY SPEC	SYM OR NO.	PROCESS OR FINISH	GRUMMAN SPEC OR MILITARY SPEC	SYM OR NO.	PROCESS OR FINISH	GRUMMAN SPEC OR MILITARY SPEC

I & T: IDENTIFICATION AND TRACEABILITY IN ACCORDANCE WITH : NONE

GRUMMAN AIRCRAFT ENGRG CORP, BETHPAGE, L. I., NEW YORK

SIZE	CODE IDENT NO.		
B	26512	LDW280-52144	A
SCALE NONE		SHEET 2.00	

ENG 77.2 7-65

01

NAS 9-1100

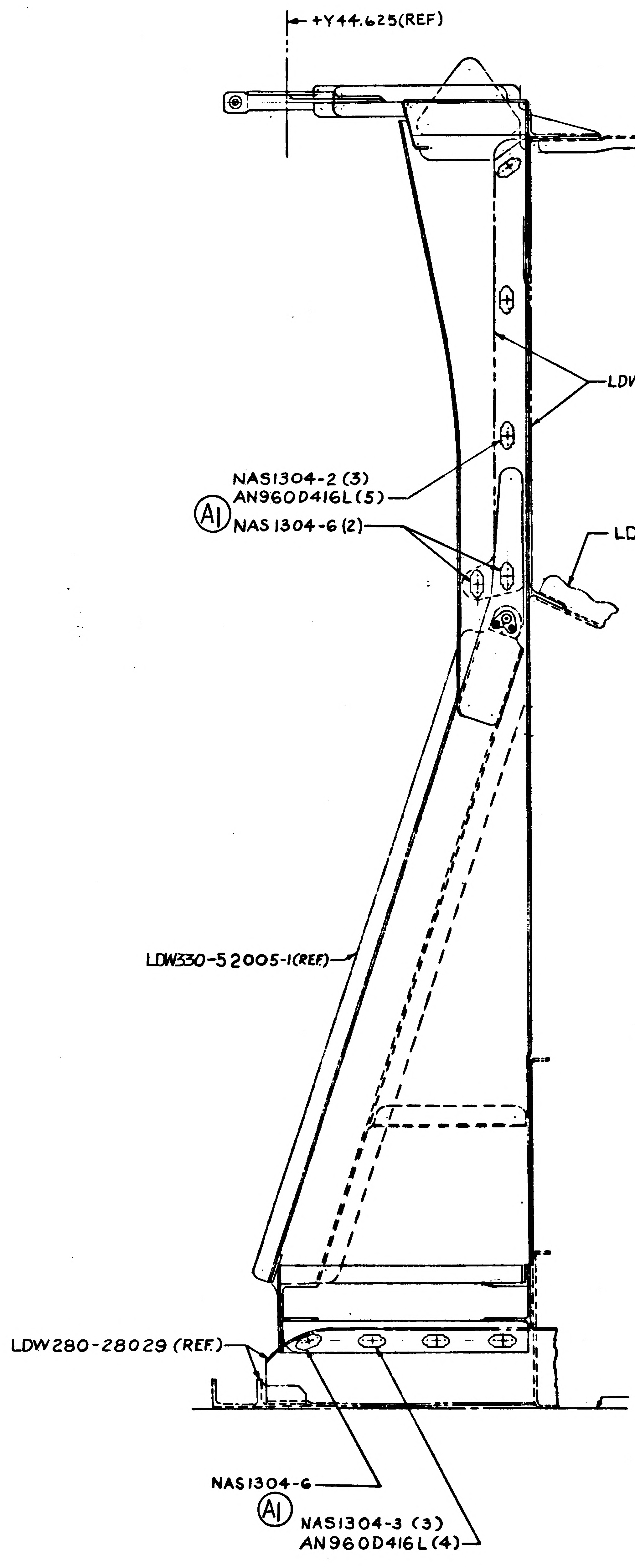

+Y44.625(REF)
LDW280-28035(REF)
LDW280-28044(REF)
NAS1304-2 (3)
AN960D416L(5)
A1
NAS1304-6 (2)
LDW280-28032(REF)
LDW330-52005-1(REF)
LDW280-28029 (REF.)
+X 253.50(REF)
NAS1304-6
A1
NAS1304-3 (3)
AN960D416L(4)

SECTION A-A
(ZONE 6A)

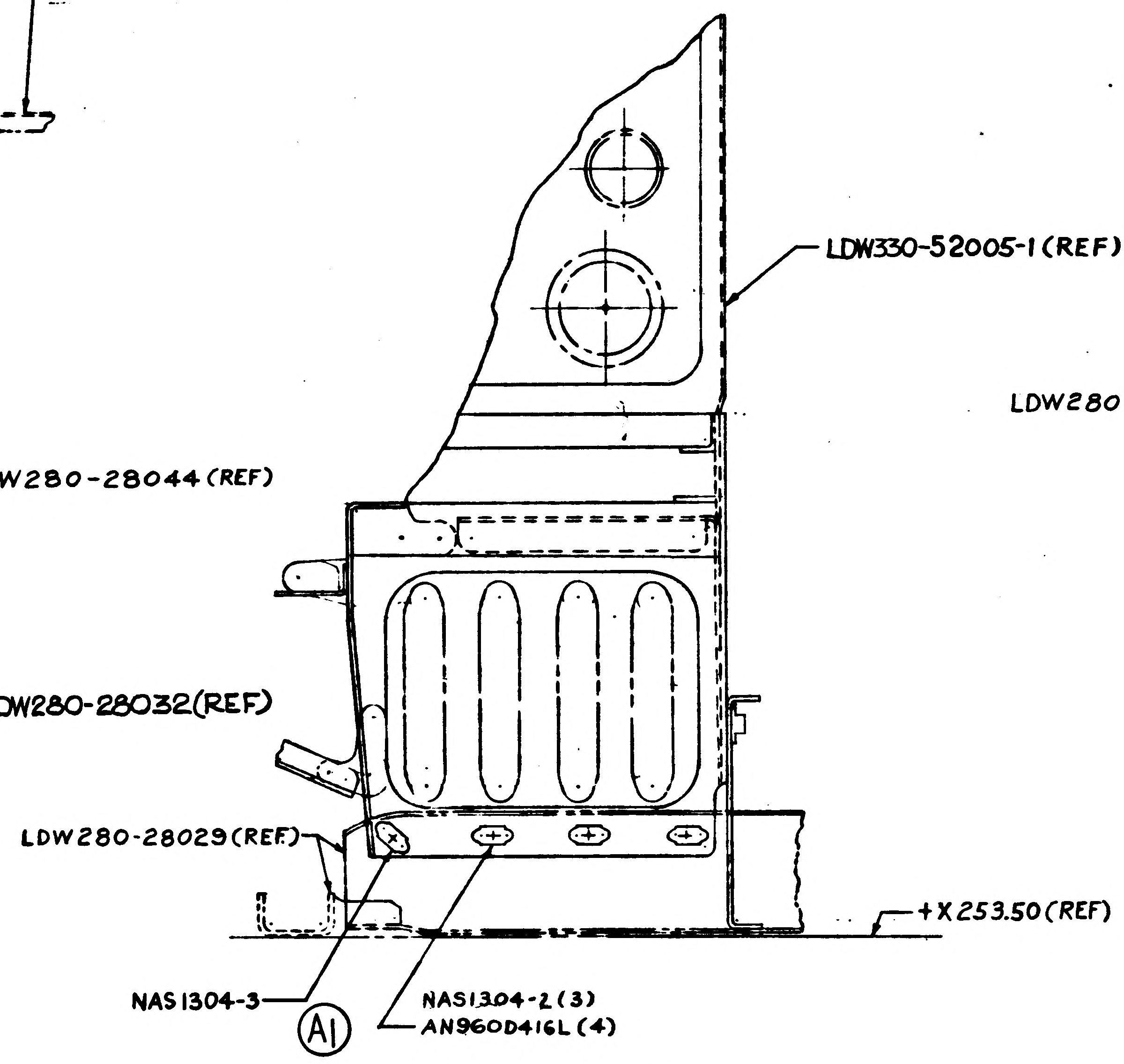

LDW330-52005-1(REF)
LDW280-28029(REF)
+X253.50(REF)
NAS1304-3
A1
NAS1304-2 (3)
AN960D416L(4)

SECTION C-C
(ZONE 5A)

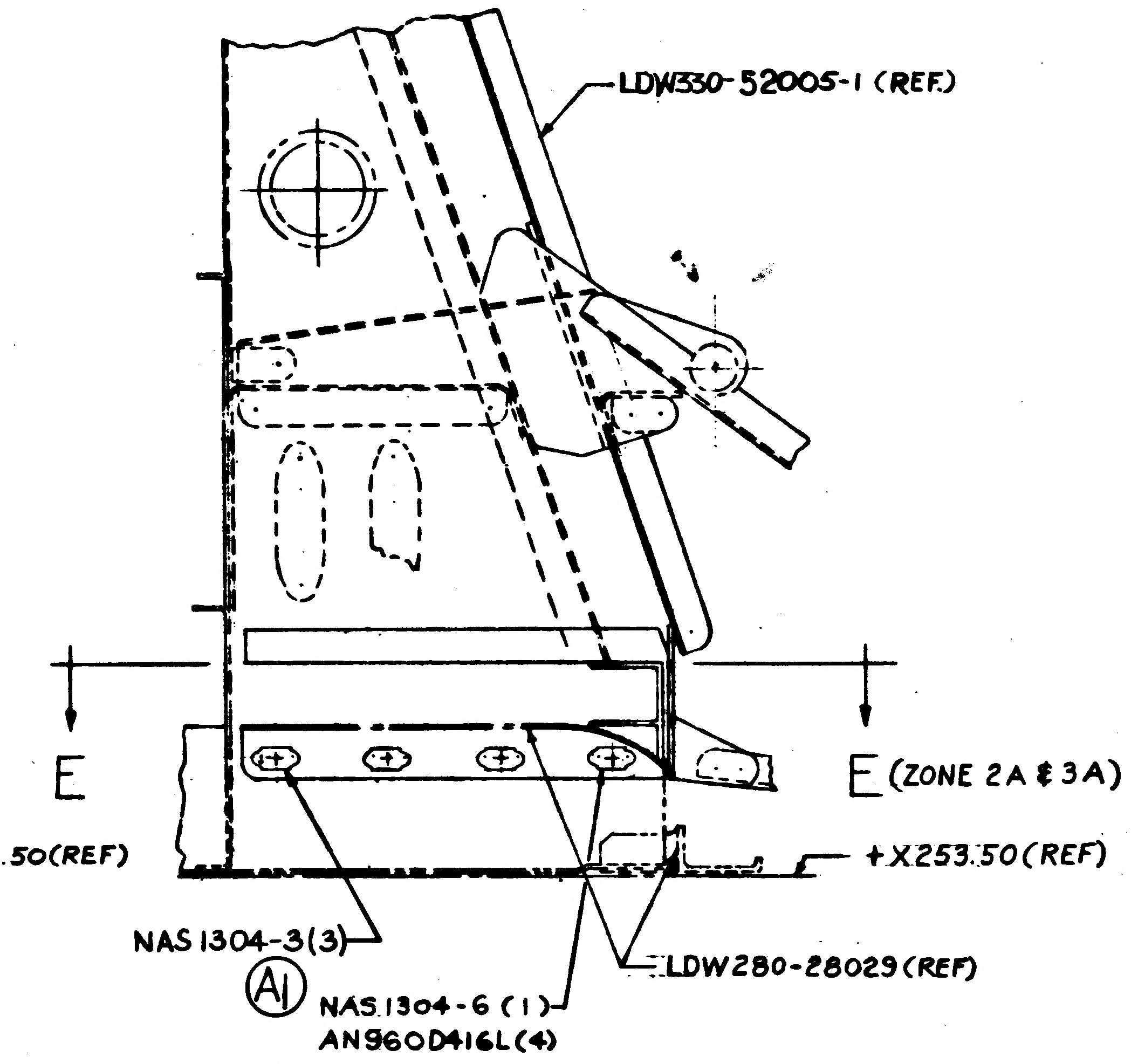

LDW330-52005-1 (REF.)
E
E (ZONE 2A & 3A)
+X253.50(REF)
NAS1304-3(3)
A1
NAS1304-6 (1)
AN960D416L(4)
LDW280-28029(REF)

SECTION B-B
(ZONE 6A)

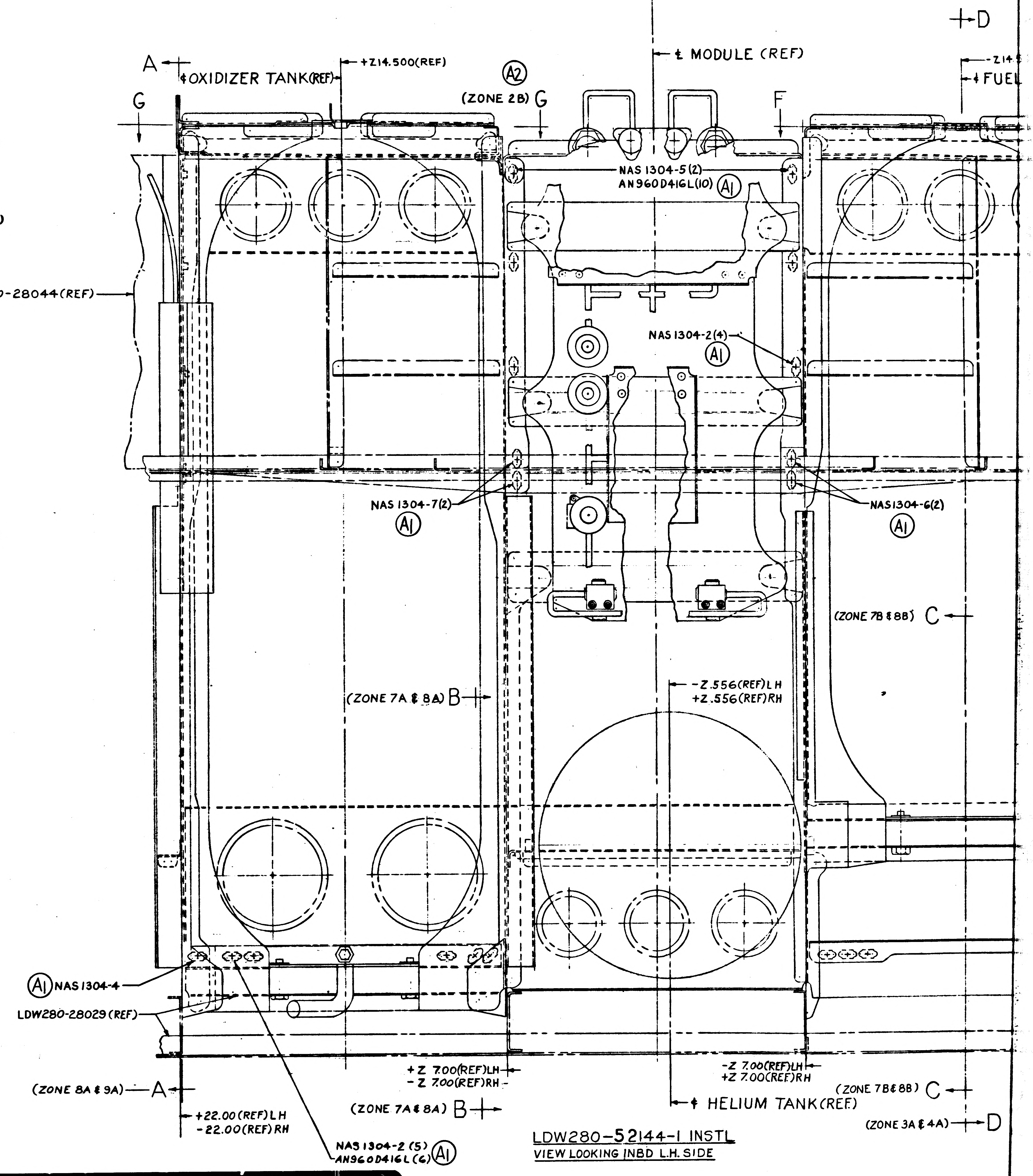

A
G
℄ OXIDIZER TANK(REF)
+Z14.500(REF)
A2
(ZONE 2B) G
℄ MODULE (REF)
F
+D
-Z14
℄ FUEL
NAS1304-5(2)
AN960D416L(10)
A1
LDW280-28044(REF)
NAS1304-2(4)
A1
NAS1304-7(2)
A1
NAS1304-6(2)
A1
(ZONE 7B & 8B) C
(ZONE 7A & 8A) B
-Z.556(REF)LH
+Z.556(REF)RH
A1 NAS1304-4
LDW280-28029(REF)
+Z 7.00(REF)LH
-Z 7.00(REF)RH
-Z 7.00(REF)LH
+Z 7.00(REF)RH
(ZONE 8A & 9A) A
+22.00(REF)LH
-22.00(REF)RH
(ZONE 7A & 8A) B
℄ HELIUM TANK(REF)
(ZONE 7B & 8B) C
(ZONE 3A & 4A) D
NAS1304-2 (5)
AN960D416L(6)
A1

LDW280-52144-1 INSTL
VIEW LOOKING INBD L.H. SIDE

01/02

NAS 9-1100

CODE IDENT 26512	SH
LDW280-52144	3

NOTES:

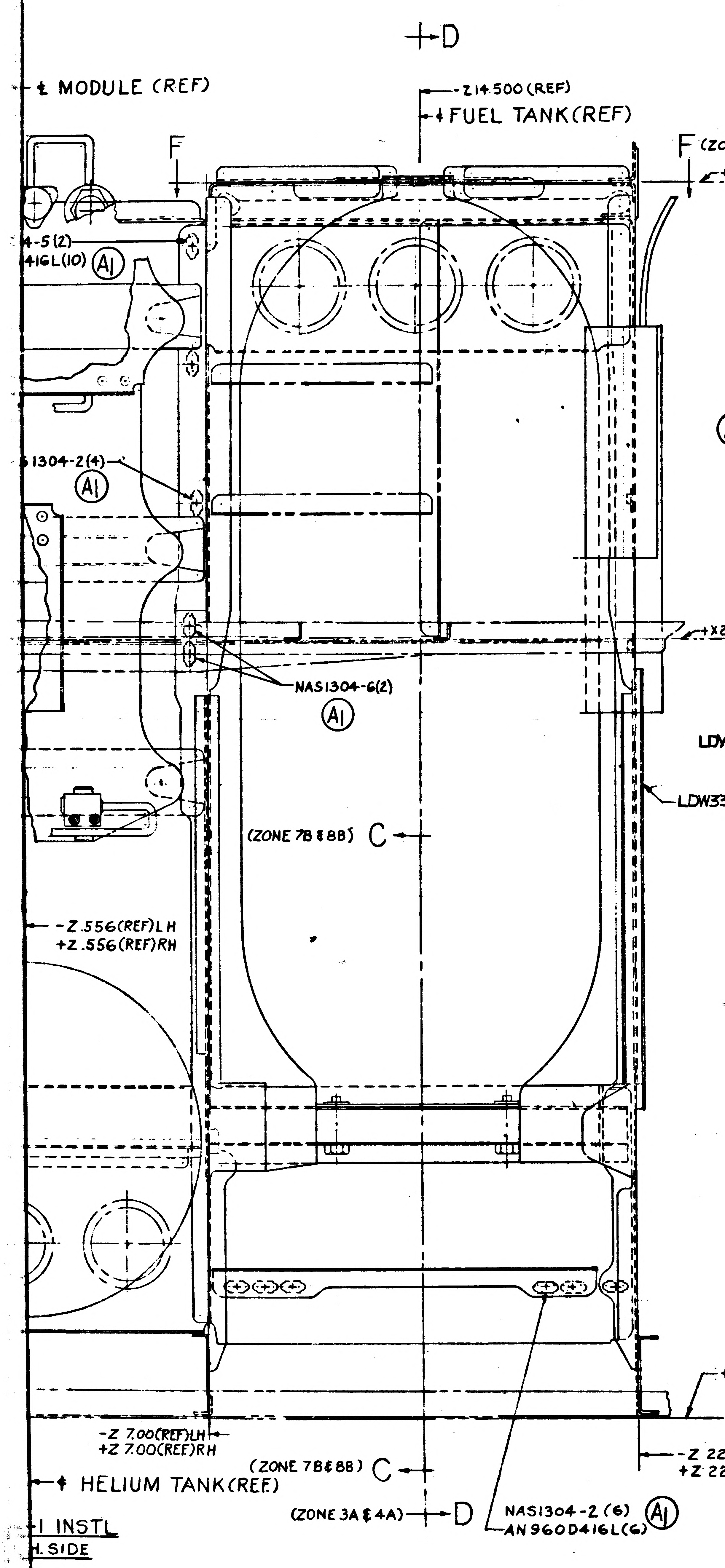
+D
℄ MODULE (REF)
Z14.500 (REF)
℄ FUEL TANK (REF)
F
F (ZONE 2B)
+X294.593(REF)
4-5(2)
416L(10) A1
1304-2(4) A1
NAS1304-6(2) A1
+X280.06(REF)
LDW330-52005-1
(ZONE 7B & 8B) C
-Z.556(REF)LH
+Z.556(REF)RH
+X253.50(REF)
-Z 7.00(REF)LH
+Z 7.00(REF)RH
(ZONE 7B & 8B) C
℄ HELIUM TANK(REF)
-Z 22.00 (REF) L.H.
+Z 22.00 (REF) R.H.
(ZONE 3A & 4A) D
NAS1304-2 (6)
AN960D416L(6) A1
I INSTL
H. SIDE

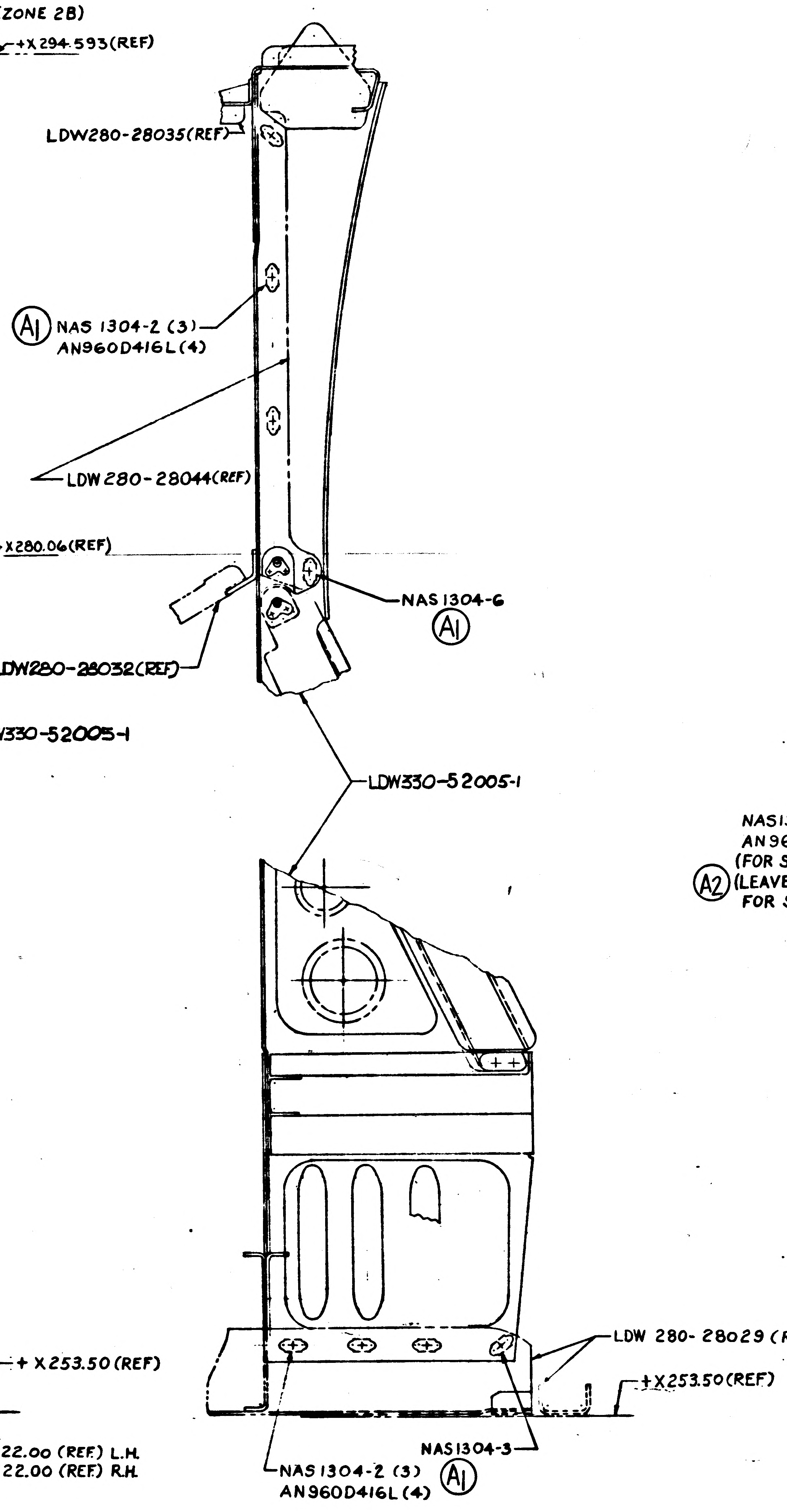
LDW280-28035(REF)
A1 NAS 1304-2 (3)
AN960D416L(4)
LDW280-28044(REF)
NAS1304-6 A1
LDW280-28032(REF)
LDW330-52005-1
LDW 280-28029 (REF.)
+X253.50(REF)
NAS1304-3
NAS1304-2 (3)
AN960D416L (4) A1

SECTION D–D
(ZONE 5A)

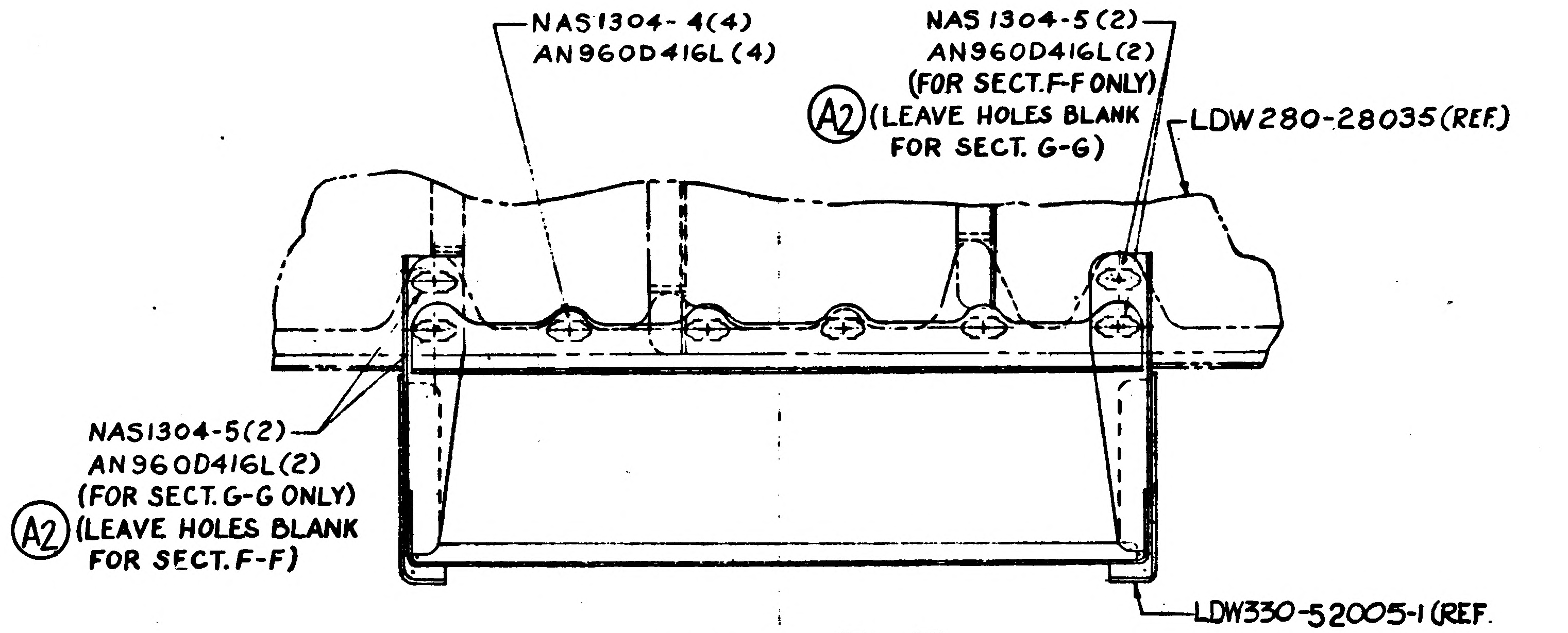
NAS1304-4(4)
AN960D416L(4)
NAS1304-5(2)
AN960D416L(2)
(FOR SECT. F-F ONLY)
A2 (LEAVE HOLES BLANK
FOR SECT. G-G)
LDW280-28035(REF)
NAS1304-5(2)
AN960D416L(2)
(FOR SECT. G-G ONLY)
A2 (LEAVE HOLES BLANK
FOR SECT. F-F)
LDW330-52005-1 (REF.

SECTION F–F (ZONE 4C)
SECTION G–G (ZONE 6C) (SIMILAR EXCEPT AS NOTED)
A2

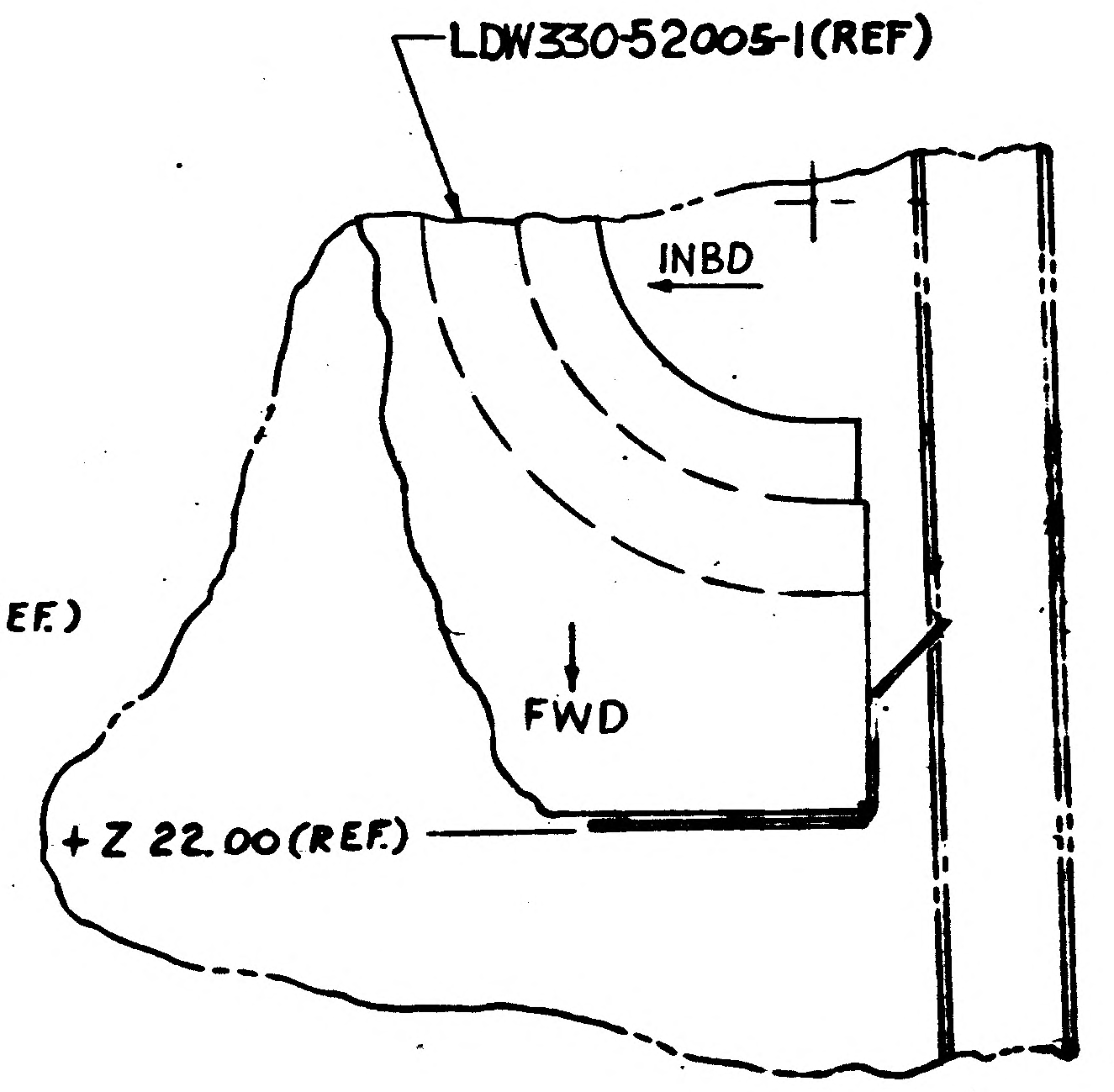
LDW330-52005-1(REF)
INBD
FWD
+Z 22.00(REF.)

SECTION E–E (ZONE 7A & 8A)
LEFT SIDE

MANUFACTURING OPERATIONS UNLESS OTHERWISE SPECIFIED NOTES CHECKED √ APPLY TO THIS DWG.
PART NUMBER AND ALL OTHER MARKINGS IN REGION MARKED ⊠ USE BOTH SIDES IF NECESSARY.
FILLET AND INSIDE CORNER RADII TOLERANCES .016R TO .062R ± .010 .063R TO .250R ± .015 OVER .250R ± .030
DEPTH SHOWN FOR TAPPED HOLES IS FULL THDS. 2-3 IMP THDS. BEYOND PERMISSIBLE.
EXTERNAL THREAD LENGTH SHOWN INCLUDES 2 IMPERFECT THREADS MAX.
DO NOT CADMIUM PLATE & PAINT HOLES OR SURFACES MARKED WITH DOUBLE ASTERISK.
MISMATCH STEP OF ± .005 PERMISSIBLE DUE TO CHANGE OF CUTTERS AT INSIDE INTERSECTING SURFACES.
DIAMETERS MARKED MUST BE CONCENTRIC WITHIN FULL INDICATOR READING
HOLES MUST BE KEPT FREE OF CHROME PLATING SOLUTION.
ALL DIMENSIONS SHOWN TO BE MET AFTER CADMIUM PLATING. THICKNESS OF PLATE .0003 MIN. TO .0005 MAX. MIN. THICKNESS TO BE .0002 ON THREADED AREAS. NO ALLOWANCE FOR PLATING IN HOLES
125 SURFACE ROUGHNESS INCLUDING REAMED HOLES PER MIL-STD-10
200 FOR ALL DRILLED HOLES
REMOVE ALL BURRS. BREAK ALL EDGES .015-.031
INSPECTION INFORMATION MINIMUM PERMISSIBLE AVERAGE EDGE DISTANCE MARKED IS
SYMBOL √ DENOTES SURFACE TO BE MACHINED
UNLESS OTHERWISE SPECIFIED TOLERANCE ON FLANGES IS ± 1/32
LENGTHS OF AN, NAS & MS AL ALY RIVETS SHORTER THAN 1 INCH ARE NOT SPECIFIED.
TOLERANCE ON LOFTED DELINEATIONS IS

DWG SIZE 34 X 88

PRINTING INFO ONLY
FULL SIZE SHEET AREA (36 X 90) = 22.4 SQ. FT.
1/2 SIZE SHEET AREA (1/4 OF FULL) = 5.5 SQ. FT.

PRINT TRIM LINE

LDW280-52144 A

LDW280-52144 A

02/02 NAS 9-1100

	GRUMMAN AIRCRAFT ENGRG CORP., BETHPAGE, L. I., NEW YORK			
LEM	SIZE J	CODE IDENT NO. 26512	LDW280-52144	A
MODEL OR END ITEM	SCALE 1/2		SHEET 3.00	

CODE IDENT 26512
LDW280-52144 SH 3

THIS IS AN ORIGINAL DWG

01

LIAISON ENGINEERING #5

GRUMMAN AIRCRAFT ENGINEERING CORP.
CODE IDENT NO. 26512
ENGINEERING ORDER

DWG. NO. LDW 280-52144 | EO NO. A1
CONTROL INFO NO. LEM-5-7765

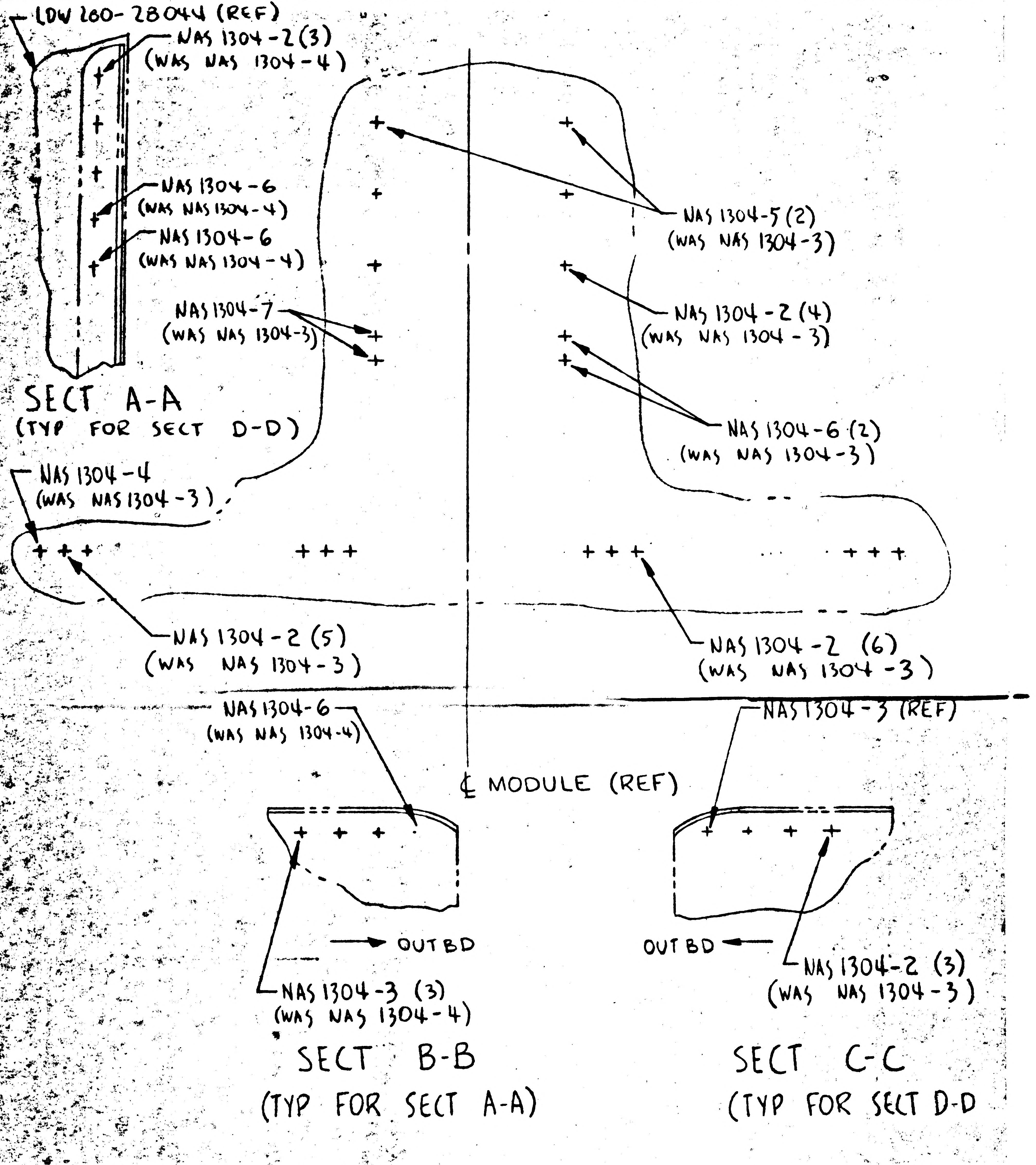

LDW 280-28044 (REF)
NAS 1304-2 (3) (WAS NAS 1304-4)
NAS 1304-6 (WAS NAS 1304-4)
NAS 1304-6 (WAS NAS 1304-4)
NAS 1304-7 (WAS NAS 1304-3)
SECT A-A (TYP FOR SECT D-D)
NAS 1304-4 (WAS NAS 1304-3)
NAS 1304-2 (5) (WAS NAS 1304-3)
NAS 1304-5 (2) (WAS NAS 1304-3)
NAS 1304-2 (4) (WAS NAS 1304-3)
NAS 1304-6 (2) (WAS NAS 1304-3)
NAS 1304-2 (6) (WAS NAS 1304-3)
NAS 1304-6 (WAS NAS 1304-4)
℄ MODULE (REF)
NAS 1304-3 (REF)
OUTBD
OUTBD
NAS 1304-3 (3) (WAS NAS 1304-4)
NAS 1304-2 (3) (WAS NAS 1304-3)
SECT B-B (TYP FOR SECT A-A)
SECT C-C (TYP FOR SECT D-D

THIS IS AN ORIGINAL EO

DETAIL SPEC REQ	CL II ENGRG CHG	CL I ENGRG CHG

REASON FOR EO: BOLT LENGTHS INCORRECT

DESCRIPTION OF EO: IN FLD & B/M FOR -1 NAS 1304-7 (2), NAS 1304-6 (6), NAS 1304-5 (2), NAS 1304-4 (1), NAS 1304-3 (8), NAS 1304-2 (24) [WAS NAS 1304-3]

GAEC C EO RELEASE: R 5 FS 8-25-6

MODEL	EFFECTIVITY: PROCURING ACTIVITY NO.	GAEC UNIT NO.	SUB CONTR UNIT NO.
LEM		LEM-2 (32)	

DRAWING CHANGE REQD: REVISE DWG	RECORD EO	DISPOSITION OF PARTS: REWORK	SCRAP
✓		✓	

APPROVED BY				—		CH	RMC	
DATE	8/11/66	9-6		—	8-3-66	7-20-66	8-24	7-23-66
7-20-66	VDI		RELIAB. GROUP	GROUP LEADER	STRESS GROUP	LIAISON ENGRG	PROJ ENGRG	GOVT

PRIORITY: C
DRAWING TITLE: MODULE INSTL - A/S - MID SECT RCS TANK
DRAWING NO. LDW 280-52144
EO NO. A1

ISSUED BY LIAISON - R.F. HUBER x6452 GROUP VDI - PHILLIPS PLT 35

NAS 9-1100

ENG 32.1 REV 3-65 LIAISON ENGINEERING #5

GRUMMAN AIRCRAFT ENGINEERING CORP.
CODE IDENT NO. 26512
ENGINEERING ORDER

DWG. NO. LDW280-52144		EO NO. B1	
CONTROL INFO NO. LM-5-9391			

ON-1 IN FLD. & B/M LDW330-52005-1
(MODULE ASSY.) S/B LDW 310-52005-1.

5

DETAIL SPEC REQ		CL II ENGRG CHG		CL I ENGRG CHG	

REASON FOR EO
TO CORRECT MODULE ASSY NO.

DESCRIPTION OF EO
ON-1 IN FLD. & B/M LDW310-52005-1
WAS LDW 330-52005-1

GAEC C EO RELEASE: G

MODEL	EFFECTIVITY: PROCURING ACTIVITY NO.	GAEC UNIT NO.	SUB CONTR UNIT NO.
LM		LM-2 (32)	

DRAWING CHANGE REQD: REVISE DWG ✓ RECORD EO
DISPOSITION OF PARTS: REWORK ✓ SCRAP

		SUPPORT	RELIAB. GROUP	GROUP LEADER	STRESS GROUP	LIAISON ENGRG	PROJ ENGRG	~~GOVT~~
APPROVED BY	JJ/RVP					CH	RMc (E.I.)	
DATE	10/9/66					10-14-66	10-18	10-15-66
	VDI							

PRIORITY	DRAWING TITLE	DRAWING NO.	EO NO.
C	MODULE INSTL. A/S-MID. SECT. REACTION CONT. SYS.	LDW280-52144	B1

ISSUED BY LIAISON-J. JARVIS x6452 SECTION V.D.I. GROUP NO. 280 PL 35

01 NAS 9-1100

ENG 32.1 REV 3-65 B

GRUMMAN AIRCRAFT ENGINEERING CORP.
CODE IDENT NO. 26512 *
ENGINEERING ORDER

DWG. NO. LDW280-52144
EO NO. B2
CONTROL INFO NO. LDW280A6895

IN B/M & F/D,
ON-1 INSTL, REMOVE LDW310-52005-1 &
ADD LDW310-52005-3

DETAIL SPEC REQ ☐ CL II ENGRG CHG ☐ CL I ENGRG CHG ✓ LCD-1432 5

REASON FOR EO: CCA 579 REPLACEMENT OF RCS HELIUM QUAD CHECK VALVES

DESCRIPTION OF EO: IN B/M & F/D, ON-1 INSTL, REMOVED LDW310-52005-1 & ADDED LDW310-52005-3

Ⓡ GAEC EO RELEASE C JK 5/23/7

MODEL	EFFECTIVITY: PROCURING ACTIVITY NO.	GAEC UNIT NO.	SUB CONTR UNIT NO.
LM		LM-2 (32)	

DRAWING CHANGE REQD: REVISE DWG ✓ RECORD EO
DISPOSITION OF PARTS: REWORK ✓ SCRAP

APPROVED BY								
DATE	5/19/67			5/18/67	5/19/67		5/23/67	5/23/67
2	VDI	SUPPORT	RELIAB. GROUP	GROUP LEADER	STRESS GROUP	LIAISON ENGRG	PROJ ENGRG	~~GOVT~~

PRIORITY: C
DRAWING TITLE: MODULE INSTL.-A/S-MID SECTION RCS TANK SUPPORT
DRAWING NO.: LDW280-52144
EO NO.: B2

ISSUED BY H. KING x7033 5/18/67 SECTION VEH. DES. INT. GROUP NO. 335 PL 25

01

NAS 9-1100

ENG 32.1 REV 3-65

GRUMMAN AIRCRAFT ENGINEERING CORP.
CODE IDENT NO. 26512
ENGINEERING ORDER

*

DWG. NO. LDW280-52144		EO NO.	B3
CONTROL INFO NO. LDW280A9963			

THIS EO CANCELS
EO - B2

DETAIL SPEC REQ	☐	CL II ENGRG CHG	☐	CL I ENGRG CHG	☑	LCD #1432	5 4

REASON FOR EO

REVISION OF LCD #1432 REMOVING LM-2 REQUIREMENTS

DESCRIPTION OF EO

CANCELLED EO B-2

GAEC EO RELEASE: Ⓡ JK 10/27/7

MODEL	EFFECTIVITY PROCURING ACTIVITY NO.	EFFECTIVITY GAEC UNIT NO.	EFFECTIVITY SUB CONTR UNIT NO.
LM		LM-2 (32)	

DRAWING CHANGE REQD REVISE DWG	DRAWING CHANGE REQD RECORD EO	DISPOSITION OF PARTS REWORK	DISPOSITION OF PARTS SCRAP
✓		✓	

	VDI	SUPPORT	RELIAB. GROUP	GROUP LEADER	STRESS GROUP	LIAISON ENGRG	PROJ ENGRG	GOVT
APPROVED BY	Jaf			FDRe	Gw		WRB	
DATE	9/23/67			10-24-67	10-23		10/24/67	10-27-67
M								

PRIORITY	DRAWING TITLE	DRAWING NO.	EO NO.
C	MODULE INSTL - A/S - MID SECTION RCS TANK SUPPORT	LDW280-52144	B3

10/24
ISSUED BY H. KING x7033 SECTION VDI GROUP NO. 335 PL 25

01

NAS 9-1100

ENG 32.1 REV 3-65

GRUMMAN AIRCRAFT ENGINEERING CORP.
CODE IDENT NO. 26512
ENGINEERING ORDER

DWG NO. LDW280-52144		EO NO.	B4
CONTROL INFO NO. LDW 280B-2214			

ON -1 ADD LDW360-52312-3 & -4

DETAIL SPEC REQ		CL II ENGRG CHG		CL I ENGRG CHG	✓ LCD 1299	(5)

REASON FOR EO: TO IMPROVE INSTL PROCEDURES

DESCRIPTION OF EO: ON -1 ADDED LDW360-52312-3 & -4

GAEC EO RELEASE: JK 2/26/8

MODEL	EFFECTIVITY		
	PROCURING ACTIVITY NO.	GAEC UNIT NO.	SUB CONTR UNIT NO.
LM		LM-2 (32)	

DRAWING CHANGE REQD		DISPOSITION OF PARTS		APPROVED BY								
				APPROVED BY				F.NR	CW			
				DATE	2/16/67			2/16/68	2/20/68		2/16/68	2-26-68
✓ REVISE DWG	RECORD EO	✓ REWORK	SCRAP		VDI	SUPPORT	RELIAB. GROUP	GROUP LEADER	STRESS GROUP	LIAISON ENGRG	PROJ ENGRG	

PRIORITY	DRAWING TITLE	DRAWING NO.	EO NO.
C	MODULE INSTL. A/S ~ MID-SECT. ~ RCS TANK SUPPORT	LDW280-52144	B4

2-19-67
ISSUED BY W. PALUK SECTION VEH. DES. INT. GROUP NO. 335 PL 25

01

NAS 9-1100

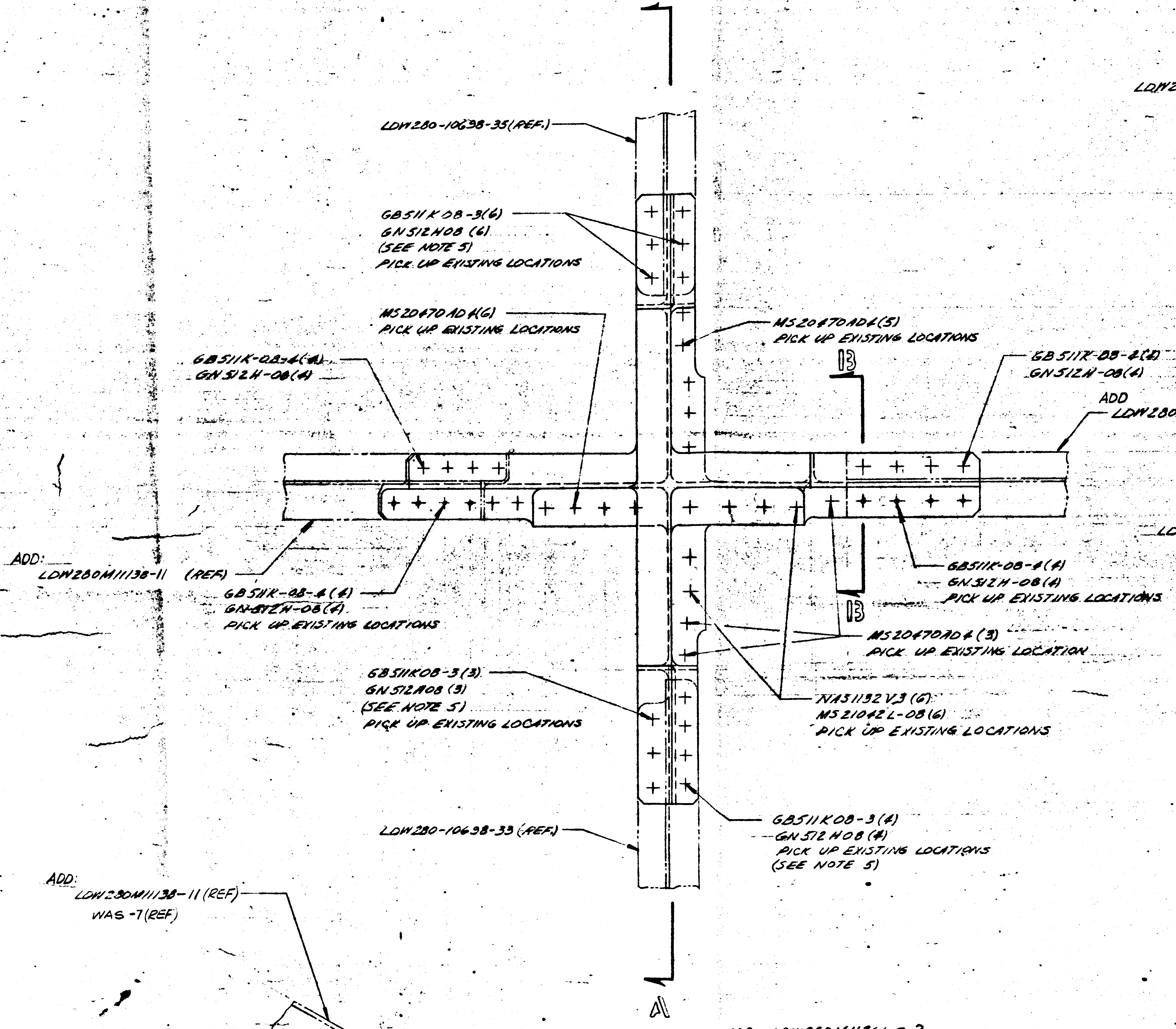
A
LDW280-10638-35(REF.)
GB511K08-3(6)
GN512H08 (6)
(SEE NOTE 5)
PICK UP EXISTING LOCATIONS
MS20470AD4(6)
PICK UP EXISTING LOCATIONS
MS20470AD4(5)
PICK UP EXISTING LOCATIONS
GB511K-08-4(4)
GN512H-08(4)
B
GB511K-08-4(4)
GN512H-08(4)
ADD
LDW280M11138-9 (REF.)
ADD:
LDW280M11138-11 (REF)
GB511K-08-4(4)
GN512H-08(4)
PICK UP EXISTING LOCATIONS
GB511K-08-4(4)
GN512H-08(4)
PICK UP EXISTING LOCATIONS
B
MS20470AD4 (3)
PICK UP EXISTING LOCATION
GB511K08-3(3)
GN512H08 (3)
(SEE NOTE 5)
PICK UP EXISTING LOCATIONS
NAS1132V3 (6)
MS21042L-08(6)
PICK UP EXISTING LOCATIONS
LDW280-10638-33 (REF.)
GB511K08-3(4)
GN512H08(4)
PICK UP EXISTING LOCATIONS
(SEE NOTE 5)
A

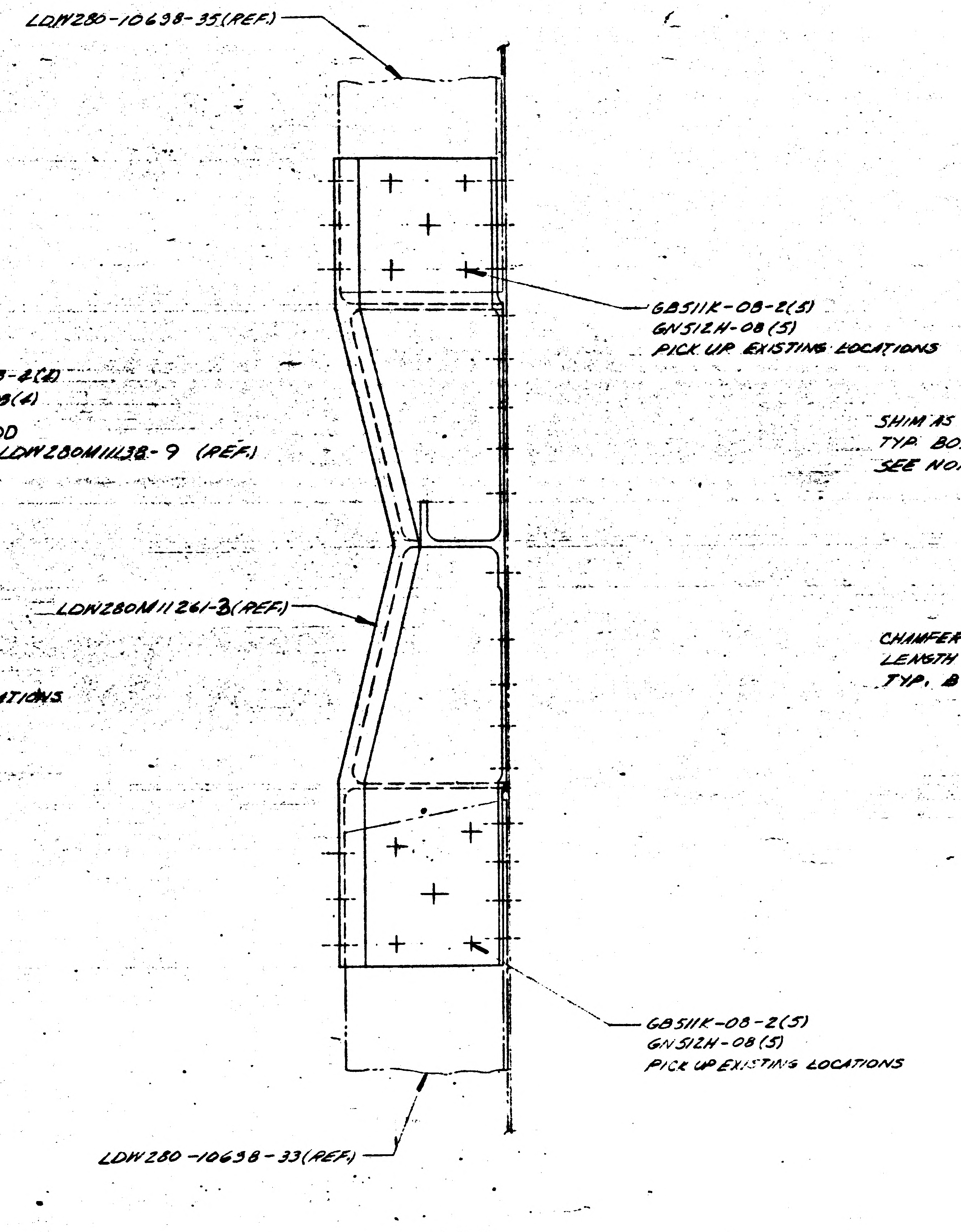
LDW280-10638-35(REF.)
GB511K-08-2(5)
GN512H-08(5)
PICK UP EXISTING LOCATIONS
LDW280M11261-3(REF)
GB511K-08-2(5)
GN512H-08(5)
PICK UP EXISTING LOCATIONS
LDW280-10638-33(REF)

SECTION A-A

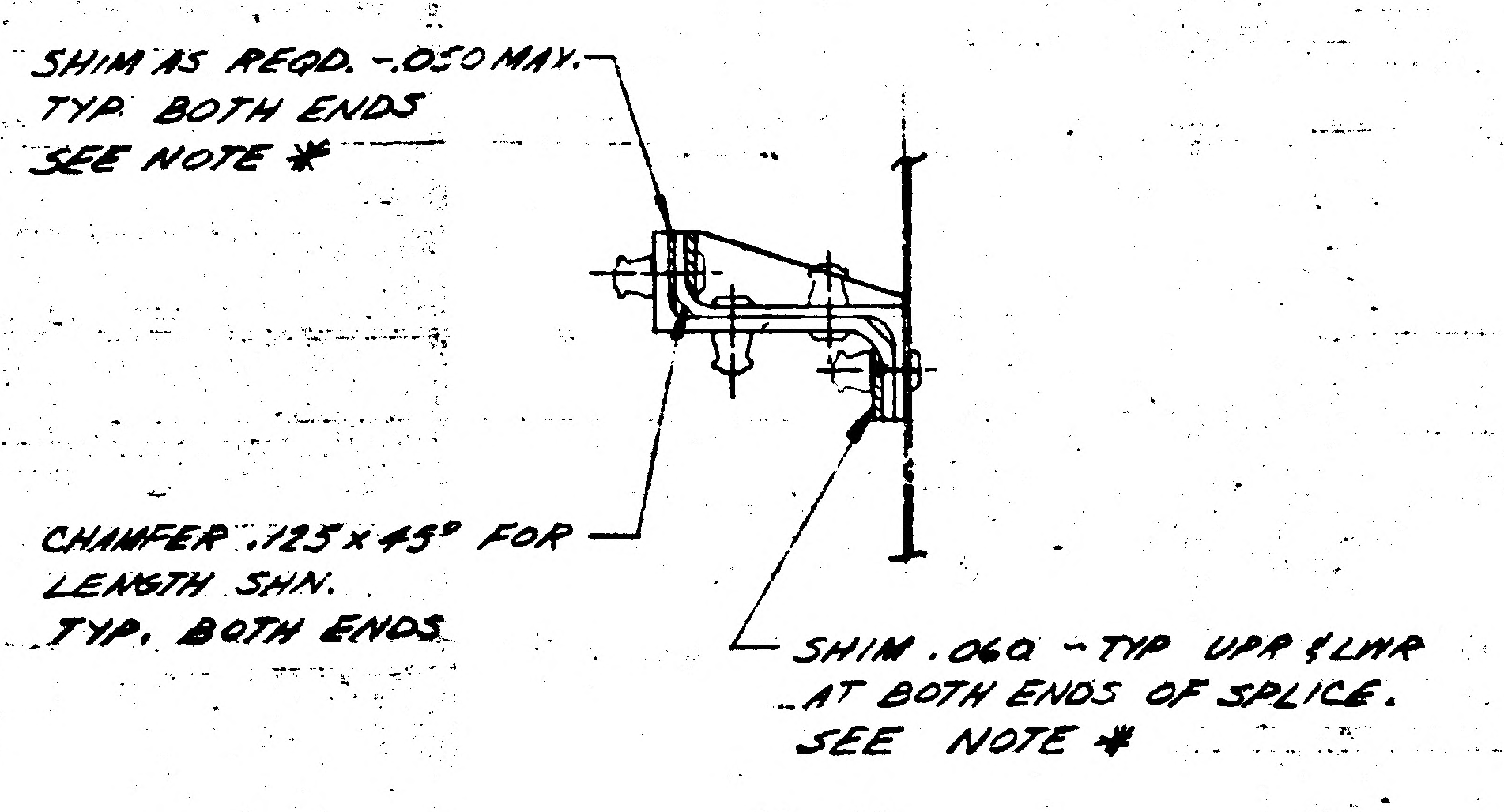
SHIM AS REQD. -.050 MAX.
TYP. BOTH ENDS
SEE NOTE *
CHAMFER .125 x 45° FOR
LENGTH SHN.
TYP. BOTH ENDS
SHIM .060 - TYP UPR & LWR
AT BOTH ENDS OF SPLICE.
SEE NOTE *

SECTION B-B

NOTES:
*. SHIM MATERAL - 2024-T3 - QQ-A-250/4
FIN 76 - THICKNESS AS NOTED
** C'BORE .312 DIA x .032 CRAD. AS REQD.

* USE NEXT APPLICABLE NOTE NUMBER.
** USE NEXT " " "

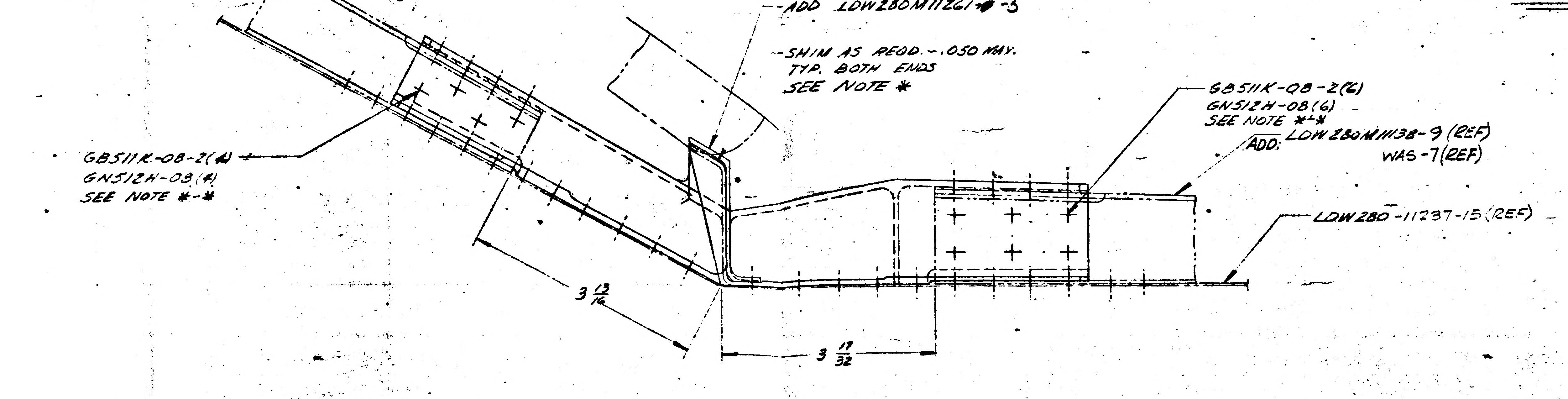
ADD:
LDW280M11138-11 (REF)
WAS -7(REF)
-ADD LDW280M11261-3
-SHIM AS REQD. -.050 MAX.
TYP. BOTH ENDS
SEE NOTE *
GB511K-08-2(6)
GN512H-08(6)
SEE NOTE **
ADD: LDW280M11138-9 (REF)
WAS -7(REF)
LDW280-11237-15(REF)
GB511K-08-2(4)
GN512H-08(4)
SEE NOTE **
3 13/16
3 17/32

LDW280-53162-1 INSTALL.

01 NAS 9-1100

(3)

DETAIL SPEC REQD | CLASS II ENGRG CHG | CLASS I ENGRG CHG
CONTROL INFO NO. LDW280A-3

REASON FOR EO: PROVIDE CLEARANCE WITH OXIDIZER LINE

DESCRIPTION OF EO: ON-1 ADDED LDW280M11261-3 SPLICE FITTING & HARDWARE. ALSO LDW280M11138-9 & -11 (REF) WAS -7(REF).

GRUMMAN EO RELEASE 1/13

MODEL	PROCURING ACT. NO	GAEC UNIT NO	SUB CONTR UNIT NO.
LM		LM-3 (33)	
LM		THRU	
LM		LM-15 (45)	

DRAWING REVISION REQD: REVISE DWG ✓ RECORD EO
DISPOSITION OF PARTS: REWORK ✓ SCRAP
BY TJU DATE 1/ VDI
RELIAB GROUP | GROUP LEADER 1/12 | STRESS GROUP 1/12 | LIAISON ENGRG | PROJ ENGR 1/12

PRIORITY C

DRAWING TITLE: SHIELD INSTALL. ASCENT STAGE - MID. SECT. - R.H. BOTTOM THERMAL

ENGINEERING ORDER
DRAWING NO. LDW280-53162
EO NO E1

ISSUED BY H. L. RYAN SECTION VEH. DES. INT. GROUP NO. 335 PL 35
CODE IDENT NO. 26512
GRUMMAN AIRCRAFT ENGINEERING CORP
BETHPAGE, L. I., N. Y.

ENG 32.3 REV 9-63

E F-A

GRUMMAN AIRCRAFT ENGINEERING CORP.
CODE IDENT NO. 26512
ENGINEERING ORDER EMF A

DWG NO. LDW280-52765
EO NO. A2
CONTROL INFO NO. LDW280A-4470

ADD NOTE *
* FINISH PER LPC 280-5
(* USE NEXT AVAILABLE NUMBER)

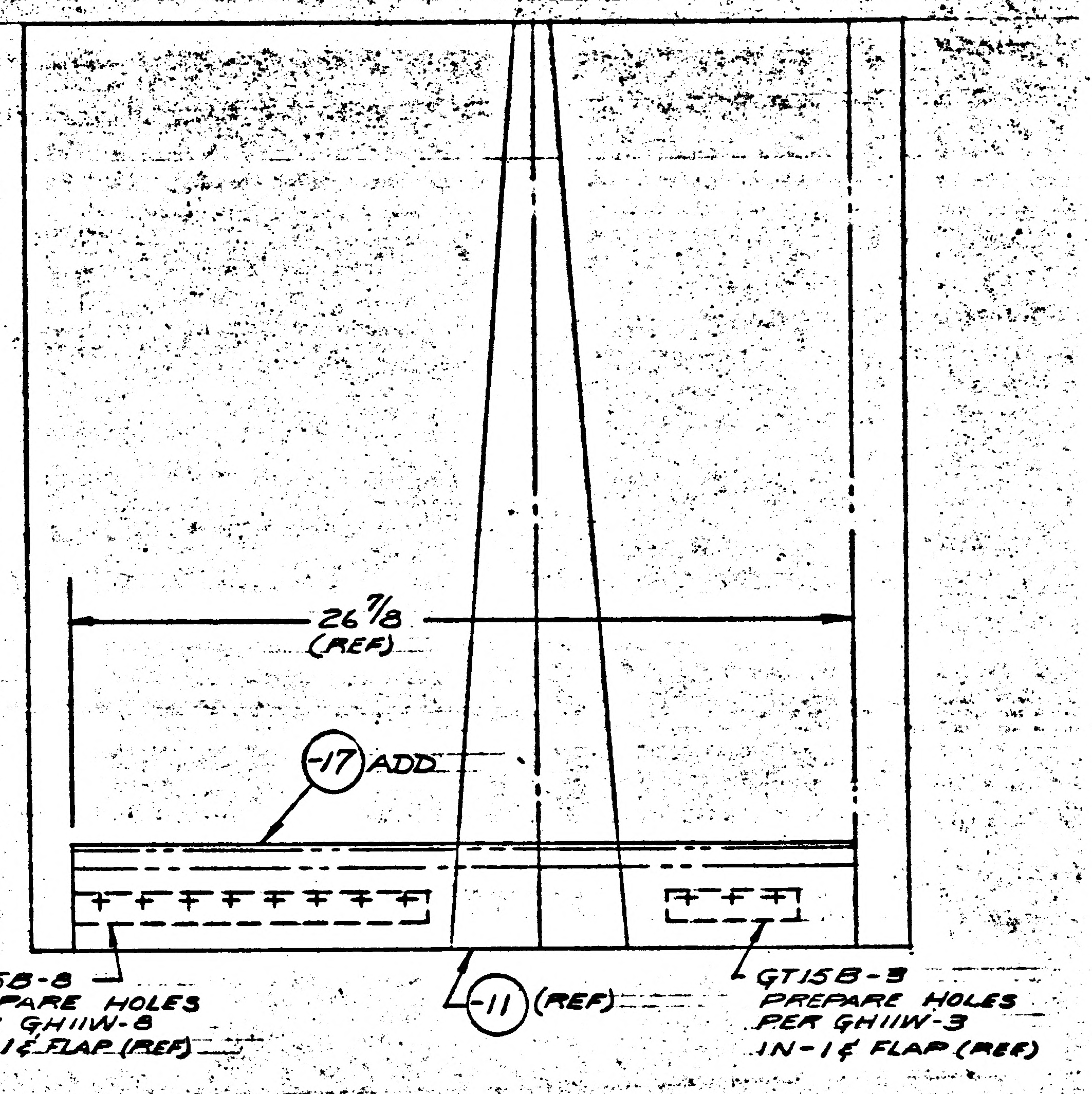

26 7/8 (REF)
-17 ADD
GT158-8 PREPARE HOLES PER GH11W-8 IN -1 ¢ FLAP (REF)
-11 (REF)
GT158-3 PREPARE HOLES PER GH11W-3 IN -1 ¢ FLAP (REF)

ADD TO MODEL BLOCK -17 N/A LDW280-52763, EFF:- LM-2(32) THRU LM-15(45) 1 REQD
ADD TO B/M -17 SKIN FLAP, SEE NOTE 2 & 3 1 REQD ON -1
ADD TO NOTE 3 -17

(NOTE:- -17 IS DIM. & DEFINED IN FIELD OF DWG)

2

DETAIL SPEC REQ ☐ CL II ENGRG CHG ☑ CL I ENGRG CHG ☐

REASON FOR EO: -17 OMITTED FROM DWG

DESCRIPTION OF EO:
ADDED NOTE *: FINISH PER LPC 280-5
ADD TO M/B -17 N/A LDW280-52763, EFF. LM-2(32) THRU LM-15(45)
ADD TO B/M -17 SKIN FLAP, SEE NOTE 2 & 3, 1 REQ'D ON -1
ADD TO NOTE 3 -17

MODEL	PROCURING ACTIVITY NO.	GAEC UNIT NO.	SUB CONTR UNIT NO.
LM		LM-2 (32)	
LM		THRU	
LM		LM-15 (45)	

DRAWING CHANGE REQD: REVISE DWG ✓ RECORD EO
DISPOSITION OF PARTS: NOT REQD
APPROVED BY / DATE: 1/1/67; 11/7/67; 1-9-67; 1-10-67
VDI

PRIORITY: C
DRAWING TITLE: SKIN ASSY~D/S~QUAD II PLUME IMPINGEMENT-SIDE REM'ABLE
DRAWING NO. LDW280-52765
EO NO. A2

ISSUED BY F. MADDEN / J. STRAKOSCH SECTION VEH DES INT. GROUP NO. 335 PL 35

LDW280-52180 B

MODEL OR END ITEM	NEXT ASSY	MODULE OR SER NO. GAEC SCH NO.	REQD PER MODULE OR END ITEM
LM	LDW280-51173	LM-1(31)	1 EA

PART NO. LDW280-52180-1 & -2

MODEL OR END ITEM	NEXT ASSY	MODULE OR SER NO. GAEC SCH NO.	REQD PER MODULE OR END ITEM
LM	LDW280-53173	LM-15(45)	1 EA
		LM-14(44)	1 EA
		LM-13(43)	1 EA
		LM-12(42)	1 EA
		LM-11(41)	1 EA
		LM-10(40)	1 EA
		LM-9(39)	1 EA
		LM-8(38)	1 EA
		LM-7(37)	1 EA
		LM-6(36)	1 EA
		LM-5(35)	1 EA
		LM-4(34)	1 EA
	LDW280-53173	LM-3(33)	1 EA
LM	LDW280-51173	LM-2(32)	1 EA

PART NO. LDW 280-52180-7 & -8

MODEL OR END ITEM	NEXT ASSY	MODULE OR SER NO. GAEC SCH NO.	REQD PER MODULE OR END ITEM

PART NO.

WORK PKG FUNCTION NO. 110 (5)

SH REV STATUS: FOR DESCRIPTION OF REV SEE SUBQ SH

SHEET	1.00	1.10	1.11	2.00	2.01	2.02	3.00		4.00
REV	B	B	B	B	B	B	B		B
SHEET									
REV									
SHEET									
REV									

LAST SECT LTR USED: AN
LAST DASH NO. USED: -70
GRUMMAN REL INFO B
PRIM NO. 215
JK(001)
MP-163-12/19/

UNLESS OTHERWISE SPECIFIED DIMENSIONS ARE IN INCHES.
TOLERANCE UNLESS SPECIFIED FRACTIONS - DECIMALS – ANGLES
± 1/16 ±.062 ± 1/2°
ORIG DWG AUTH
DETAIL SPEC REQUIREMENT
CLASS II ENGRG CHANGE
CLASS I ENGRG CHANGE

CONTRACT NO. NAS9-1100
LINE ITEM
DOCUMENTATION TYPE II

DRAWN BY	JRQUARLES 4/3/67	RELIABILITY	
LAYOUT BY	F. CURASI 5-2-67	THERMO	6/16/67
CHECKED BY	4-13-67		
GR LEADER	F. DeRESPINIS 5-2-67		
VEH DES INT	J. PUSATERI 5-2-67		
STRUCT	5/9/67	PROJ ENGR	McClaughlin 6/13/67
STRUCT	5/J	REL GROUP	Botti 6-16-67
WEIGHTS			

GRUMMAN AIRCRAFT ENGRG CORP
BETHPAGE, L. I., NEW YORK

BLANKET INSTALLATION
ASCENT STAGE - CABIN -
RCS SHIELD - FWD

SIZE B
CODE IDENT NO. 26512
LDW280-52180 B
SCALE NONE
SHEET 1.00 OF 8

ENG 77.1 12-65

01 NAS 9-1100

REVISIONS FOR CONTINUATION OF REVISIONS SEE SHEET 1.11

CHANGE LTR	ITEM NO.	SHEET NO.	ZONE	GRUMMAN INFO ONLY	DET SPEC	CLASS I	CLASS II	ENGRG ORDER	DESCRIPTION	EFFECTIVITY	DISPOSITION OF EXISTING PARTS		CHANGED BY AND DATE	ENGRG APPD	~~GOVT~~ APPD
											REWORK	SCRAP			
A	1							EO A1	EO A1 INITIAL DRAWING RELEASE PARTS MADE PER E.O.	LM-2(32) THRU LM-15(45)			J R QUARLES 4-3-67	DWW 6/15/67	6-16-67
	2		11B					EO A2	ON-1 & -2 IN SECT M-M RELOCATED LDW280-11294-15 AND ASSOC HARDWARE.		✓				
	3		9B					EO A3	ADDED NOTE 24. ON -1 & -2 REMOVED 2 EACH: GB511J-06-1, GS26B-1, GB10J-1, GW10H-1 & GS550K-04-1.		✓				
	4								ADDED LM-1(31) TO EFF N/A LDW 280-51173	LM-1	NOT	REQD	W. CONROY 4-24-67		
	5								DELETED -29-23 & -31 FROM NOTE #25 (DWG CORRECTION)	LM-1 THRU LM-15	NOT	REQD	W. CONROY 5-10-67		
	6								ADDED "FABRICATE AS PER LPC 280-1-2 & -3 TO NOTE #1						
B	1	1.00, 1.10, 2.00, 2.01, 3.00, 4.00	14 17B 23B				✓	EO-B1 LCD 19-1106	ON-1 & -2 INSTL: IN SECT T-T & MOD/BLK GS26B-3 WAS GS26B-1, RELOCATED GS26B-3 (TYP 4 PLACES). ADDED NOTES 27, 28, 29 ADDED DETAIL AH-AH. IN NOTE 21 ADDED "LDW280P10871-11 TAPE AROUND EDGES OF -25, -26, -27, -28, -29. SEE DETAIL AH-AH FOR WELD DETAIL". IN NOTE 25 (REF EO-A1) 3/4 WAS 1/2. DELETED NOTE 23 (EO-A1). DELETED NOTE 13. IN FLD, B/M & MOD/BLK ADDED -3 & -5 ASSY. IN FLD & B/M DELETED -33.	LM-2 THRU LM-15	✓		T. KRONCKE 12-11-67		
	2	1.10					✓	EO-B2	REF A-5 CHANGE: DESCRIPTION SHOULD BE "DELETED -29, -23 & -31 FROM NOTE #25. ON -1 INSTL ADDED -45 BLANKET & ON -3 INSTL ADDED -46 BLANKET."	NOT REQD	NOT	REQD			
	3	1.10					✓	LEO280-619	REF EO-B2: -2 INSTL WAS -3 INSTL	NOT REQD	NOT	REQD			
	4	3.00	11A				✓	EO-B4	ON-1 & -2 IN VIEW K-K RELOCATED (1) LDW280-28377-1 AND ASSOCIATED HARDWARE.	LM-2 THRU LM-15	✓				
	5	2.00, 2.01, 3.00, 4.00	4A 24B				✓	EO-B5	ON-1 INSTL ADDED -51 PATCH ASSY AND ON -2 INSTL ADDED -47 & -49 PATCH ASSEMBLY. ADDED DETAIL AJ. FOR -29, 1 REQD WAS 4.	LM-1 THRU LM-15	✓	-29			
	6	1.10					✓	EO-B6	REF EO-B1 & B4: IN EO EFFECTIVITY BLOCK, LM-1 THRU LM-15 WAS LM-2 THRU LM-15	LM-1 THRU LM-15	✓	H.D.	F.R		

CHG APPROVED

LTR	GROUP LDR	VEH DES INT	STRUCT	STRUCT	WEIGHTS	THERMO.					
A	~	F.A.R. 5/2/67	√								
B											

GRUMMAN AIRCRAFT ENGRG CORP., BETHPAGE, L. I., NEW YORK

SIZE	CODE IDENT NO.		
B	26512	LDW280-52180	B

Ⓑ

SCALE NONE SHEET 1.10

ENG 77.16 3-66

01

NAS 9-1100

REVISIONS

CHANGE LTR	ITEM NO.	SHEET NO.	ZONE	SH CHG LTR	GRUMMAN INFO ONLY	DET SPEC	CLASS I	CLASS II	ENGRG ORDER	DESCRIPTION	EFFECTIVITY	DISPOSITION OF EXISTING PARTS		CHANGED BY AND DATE	ENGRG APPD	GOVT APPD
												REWORK	SCRAP			
B	7	1.11,2.00,2.01, 3.00,4.00	4B 5C 5D 6A 12A				✓		EO B7 LCD 1847	REMOVED NOTE 22. TO NOTE 21 ADDED -23, -31. (DRAFTING ERROR CORRECTION) ADDED -7, -8, -9, -10, -53, -55, -57, -58, -59 & -61. FROM -1 & -2 REMOVED LM-2 THRU LM-15 REQ. ADDED NOTES 30, 31, SECTIONS AK-AK, AL-AL, AM-AM & AN-AN & SH 1.11	LM-2 THRU LM-15	✓		T. KRONCKE 12-11-67		
	8	2.00,2.01, 2.02,300	4A 6C		T			✓	EO B8 LCD 2179	ADDED -63 THRU -70 ASSYS TO -1 & -2 INSTL. REMOVED -45 & -46 FROM -1 & -2 AND ADDED THEM TO -3 & -5 ASSYS RESPECTIVELY. ADDED SH 2.02	LM-1 THRU LM-15	NOT	REQD			
	9	3.00 4.00	2A 17A 18C 19B				✓		EO B9 LCD 10774	ON -1 & -2: ADDED NOTE # 32. ON SECTIONS W-W, Z-Z, Y-Y AND V-V ADDED 1/8 DIMENSION.	LM-1	✓				
	10	1.11 & 4.00					✓		EO B10 LCD-10774	ON -1 & -2 REMOVED "CONSTANT" FROM $\frac{1}{8}$ MIN. GAP	LM-1	✓				
	11	3.00			T			✓	LCD 2179	REF EO B8: REVISE NOTE #3 TO READ "GS577A-1 ------- (REF)" SHOULD BE REVISE NOTE #3 TO READ "GS577A-1 ------ (REF) WAS "STAPLES GS577A-1 MAY BE PURCHASED FROM BOSTITCH INC., GREENWICH, R.I. (STAPLING PLIER BOSTITCH P3 (REF)".	LM-1 THRU LM-15	NOT	REQD	F.R. H.D.	12-12-67	

CHG APPROVED	LTR	GROUP LDR	VEH DES. INT	STRUCT	STRUCT	WEIGHTS	THERMO
	B						

FOR CONTINUATION OF REVISIONS SEE SHEET

GRUMMAN AIRCRAFT ENGRG CORP, BETHPAGE, L. I., NEW YORK

SIZE	CODE IDENT NO.		
B	26512	LDW280-52180	B
SCALE NONE			SHEET 1.11

ENG 77.3 5-64

01
NAS 9-1100

QTY PER ASSEMBLY																				
		-10	-9	-8	-7	-5	-3	-2	-1	PART NO.	I&T	CODE IDENT	NOMENCLATURE OR DESCRIPTION	MATERIAL	GOVT SPEC	COML SPEC	STOCK SIZE	PROCESS SYM	FINISH NO.	ZONE
				AR				AR		LDW280-52180-12	E		BLANKET INBD RH	SEE NOTE 1&2						20B
					AR				AR	-11			BLANKET INBD LH	SEE NOTE 1&2						20B
					AR					-51			BLANKET PATCH	SEE NOTE 21						4A
				AR						-49			BLANKET PATCH	SEE NOTE 21						4A
										-47			BLANKET PATCH	SEE NOTE 21						4A
		AR				AR				-46			BLANKET	SEE NOTE 11						
			AR				AR			-45			BLANKET	SEE NOTE 11						
		AR	AR	AR	AR	AR	AR	AR	AR	-35			TAPE	SEE NOTE 15						
						AR				-31			BLANKET-INBD RH	SEE NOTE 21						3C
				AR						-28			BLANKET-OUTBD LWR RH	21						6B
					AR					-27			BLANKET-OUTBD LWR LH	21						6B
							AR			-23			BLANKET-INBD LH.	21						3C
				AR	AR			AR	AR	-21			BLANKET-PATCH	6						3A
				AR				AR		-20			BLANKET-OUTBD AFT RH	6						4A
					AR				AR	-19			BLANKET-OUTBD AFT LH	6						4A
				AR				AR		-18			BLANKET-OUTBD FWD RH	6						5C
					AR				AR	-17			BLANKET-OUTBD FWD LH	6						5C
		AR				AR				-16			BLANKET-INBD RH	6						3C
			AR				AR			-15			BLANKET-INBD LH	SEE NOTE 6						3C
				1						-10			BLANKET ASSY	RH				NONE	NONE	4A
					1					-9			BLANKET ASSY	LH						4A
										-8			BLANKET INSTL	RH						4A
										-7			BLANKET INSTL	LH						4A
								1		-5			BLANKET ASSY	RH						4A
									1	-3			BLANKET ASSY	LH						4A
										LDW280-52180-2			BLANKET INSTL	RH						4A
										LDW280-52180-1	E		BLANKET INSTL	LH.				NONE	NONE	4A

SYM OR NO.	PROCESS SYM OR FINISH NO.	GRUMMAN SPEC OR MILITARY SPEC	SYM OR NO.	PROCESS SYM OR FINISH NO.	GRUMMAN SPEC OR MILITARY SPEC	SYM OR NO.	PROCESS SYM OR FINISH NO.	GRUMMAN SPEC OR MILITARY SPEC

I&T: IDENTIFICATION AND TRACEABILITY IN ACCORDANCE WITH NONE

GRUMMAN AIRCRAFT ENGRG CORP., BETHPAGE, L. I., NEW YORK

SIZE	CODE IDENT NO.		
B	26512	LDW280-52180	B

SCALE NONE

SHEET 2.00

ENG 77.2 5-64

01

NAS 9-1100

QTY PER ASSEMBLY																				
		-10	-9	-8	-7	-5	-3	-2	-1	PART NO.	I&T	CODE IDENT	NOMENCLATURE OR DESCRIPTION	MATERIAL	GOVT SPEC	COML SPEC	STOCK SIZE	PROCESS SYM	FINISH NO.	ZONE
					AR					LDW280-52180-61			BLANKET PATCH	SEE NOTE 31						4A
				AR						-59			BLANKET PATCH							4A
				AR						-58			BLANKET-OUTBD-UPPER-RH							6C
					AR					-57			BLANKET-OUTBD-UPPER-LH							6C
		AR								-55			BLANKET-INBD-RH							3C
			AR							LDW280-52180-53			BLANKET-INBD-LH	SEE NOTE 31						3C
				AR	AR			AR	AR	NAS1515H06L	E		WASHER	STD PART						
										MS20470AD3			RIVET	STD PART						
				4	4			4	4	GS26B-3			STANDOFF	GRUMMAN STD						
				22	22			22	22	GW10H-1			WASHER	GRUMMAN STD						
		AR	AR	AR	AR	AR	AR	AR	AR	GT835P-8			TAPE							
					AR				AR	GT835M-8			TAPE							
		AR	AR	15	15	AR	AR	15	15	GT535L-LA0020			TAPE LOOP							
		AR	AR	15	15	AR	AR	15	15	GT535L-HA0020			TAPE HOOK							
				AR	AR			AR	AR	GT535B-2-100			TAPE							
		AR	AR	AR	AR	AR	AR	AR	AR	GS577A-2			STAPLE							
				13	13			13	13	GS550K-04-1			SCREW							
				9	9			9	9	GS26B-1			STANDOFF							
				AR	AR			AR	AR	GR11B-1			RETAINER							
				13	13			13	13	GB511J-06-1			SCREW							
				13	13			13	13	GB10J-2			BUSHING							
				9	9			9	9	GB10J-1			BUSHING	GRUMMAN STD						
				AR	AR			AR	AR	LDW280-11790-11			FOIL	SEE DWG						
		AR	AR	AR	AR	AR	AR	AR	AR	LDW280P10871-11			TAPE	SEE DWG						
				4	4			4	4	LDW280-11294-15	E		CLIP	SEE DWG						12B

SYM OR NO.	PROCESS SYM OR FINISH NO.	GRUMMAN SPEC OR MILITARY SPEC	SYM OR NO.	PROCESS SYM OR FINISH NO.	GRUMMAN SPEC OR MILITARY SPEC	SYM OR NO.	PROCESS SYM OR FINISH NO.	GRUMMAN SPEC OR MILITARY SPEC

I & T: IDENTIFICATION AND TRACEABILITY IN ACCORDANCE WITH NONE

GRUMMAN AIRCRAFT ENGRG CORP., BETHPAGE, L. I., NEW YORK

SIZE	CODE IDENT NO.		
B	26512	LDW280-52180	B

SCALE NONE

SHEET 201

(B)

ENG 77.2 5-64

01

NAS 9-1100

QTY PER ASSEMBLY										CODE IDENT	PART NO.	I&T	NOMENCLATURE OR DESCRIPTION	MATERIAL	GOVT SPEC	COML SPEC	STOCK SIZE	PROCESS SYM	FINISH NO.	ZONE
-70	-69	-68	-67	-66	-65	-64	-63	-2	-1											
				AR	AR	AR	AR				GT535L-LA0020	E	TAPE LOOP	GRUMMAN STD						
AR	AR	AR	AR	AR	AR	AR	AR				GT535L-HA0020	E	TAPE HOOK	GRUMMAN STD						
AR	AR	AR	AR	AR	AR	AR	AR				GS577A-2		STAPLE	GRUMMAN STD						
AR	AR	AR	AR	AR	AR	AR	AR				LDW280P10871-11		TAPE	SEE DWG						
	AR										LDW280-52180-51		BLANKET PATCH	SEE NOTE 21						4A
AR											-49		BLANKET PATCH	SEE NOTE 21						4A
		AR									-47		BLANKET PATCH	SEE NOTE 21						4A
AR	AR	AR	AR	AR	AR	AR	AR				-35		TAPE	SEE NOTE 15						
			AR								-29		BLANKET PATCH	SEE NOTE 21						4A
				AR							-28		BLANKET-OUTBD-LWR-RH	SEE NOTE 21						6B
					AR						-27		BLANKET-OUTBD-LWR LH	SEE NOTE 21						6B
						AR					-26		BLANKET-OUTBD-UPR-RH	SEE NOTE 21						6C
							AR				-25		BLANKET-OUTBD UPR LH	SEE NOTE 21						6C
								1			-70		BLANKET ASSY					NONE	NONE	4A
									1		-69		ASSY							
								1			-68		ASSY							
									1		-67		ASSY							
								1			-66		ASSY							
									1		-65		ASSY							
								1			-64		ASSY							
									1		LDW280-52180-63	E	BLANKET ASSY					NONE	NONE	4A

SYM OR NO.	PROCESS OR FINISH	GRUMMAN SPEC OR MILITARY SPEC	SYM OR NO.	PROCESS OR FINISH	GRUMMAN SPEC OR MILITARY SPEC	SYM OR NO.	PROCESS OR FINISH	GRUMMAN SPEC OR MILITARY SPEC

I & T: IDENTIFICATION AND TRACEABILITY IN ACCORDANCE WITH :
NONE

GRUMMAN AIRCRAFT ENGRG CORP, BETHPAGE, L. I., NEW YORK

SIZE	CODE IDENT NO.		
B	26512	LDW280-52180	B
SCALE NONE		SHEET 2.02	

(B)

ENG 77.2 7-65

0 1

NAS 9-1100

12
11
10
9
-15(REF)
-23(REF)
-53(REF)
LDW280-28173(REF)
LDW350-28173(REF)
-11(REF)
TAPE "D" (SEE NOTE 10)(TYP)
SECTION P-P ZONE 10C
LDW280-28173(REF)
-15(REF)
LDW280-11234-15
MS20470AD3(2)
TYP. (2) PLACES
LDW280-28173(REF)
TAPE "D" (SEE NOTE 10)(TYP)
-11(REF)
SECTION N-N ZONE 11C
N
-23(REF)
-53(REF)
-15(REF)
P
LDW280-28036(REF)
N ZONE 11C
P ZONE 10D
Y 49.130 (REF)
-55 & -31 R.H. ONLY IN THIS AREA
-25(REF)
-57(REF)
TAPE "B" (SEE NOTE 10) TYP. (6) PLACES
LDW280-28173(REF)
X 252.00 (REF)
TAPE "D" (SEE NOTE 10)(TYP)
LDW280-28173(REF)
LDW280-11234-15
MS20470AD3(2)
TYP. (2) PLACES
-15(REF)
-11(REF)
LDW280-28173(REF)
M
A2
M ZONE 12B
L ZONE 10A
-11(REF)
GB511J-06-1
GS26B-1
A3
GB10J-2
GBK70-1
GW10H-1(2)
TYP. (9) PLACES
VIEW K-K ZONE 8A
GS550K-04-1(9)
LDW280-88180-21
-55 & -31 R.H. ONLY IN THIS AREA
-27(REF)
-15(REF)
SEE SECT. C-C TYP. (5) PLACES L.H. SIDE ONLY
SEE SECT. F-F TYP. (5) PLACES R.H. SIDE ONLY
-53(REF) AT SECT AK-AK
-57(REF) AT SECT AN-AN
OUTER LAYER (MAKE FROM .00125 INCONEL 600 & PAINT WITH BLACK PYROMARK PER LPC280-5)
SECTION M-M ZONE 11B
-15,-19(REF)
GS577A-2
GT835E-8
(AS REQ'D)
OUTER LAYER (MAKE FROM LDW280-11790-10
TAPE "D" (SEE NOTE 10)(TYP)
-11(REF)
LDW280-28173(REF)
L
LDW280-28173(REF)
-15(REF)
B4
LDW280-28178(REF)
TRIM -31 & -55 RH ONLY
SECTION AK-AK LEFT SIDE
SECTION AN-AN LEFT & RIGHT SIDE
ZONE 4B
-55(REF)
-16(REF)
SEE NOTE 11
B7
SECTION AK-AK (ZONE 4B)
RIGHT SIDE
ZONE 4B
SECTION L-L ZONE 11B
K ZONE 10B

01/04

NAS 9-1100

LDW280-52180 SH 3

8
7
6
5
K
AA ZONE 21C SH4
-23(REF)
-53(REF)
-15(REF)
-17(REF.)
SEE SECT. E-E TYP. (4) PLACES
SEE SECT D-D
-17 (REF)
CUTOUT IN -25 & -57 ONLY
Y 89.130 (REF.)
-55 & -31 R.H. ONLY IN THIS AREA
-25 (REF.)
-57(REF)
TAPE "B" (SEE NOTE 10) TYP. (6) PLACES
LDW280-28173 (REF.)
X 252.00 (REF.)
LDW280-52190-21
-55 & -31 R.H. ONLY IN THIS AREA
-27 (REF.)
SEE SECT. C-C TYP. (5) PLACES L.H. SIDE ONLY
SEE SECT. F-F. TYP. (5) PLACES R.H. SIDE ONLY
TRIM -31 & -55 RH ONLY
K ZONE 10B
AB
Z ZONE 18C SH4
ZONE 15A SH4
X
2 1/2 DIA (TYP) 2 PLACES
AD
AD ZONE 22A SH4
X
AA
AB ZONE 22C SH4
Z
-17 (REF.)
SEE SECT BB TYP. (11) PLACES
-15 (REF.)
LDW280-52180-25 (SHOWN) ON -63 ASSY (B8)
-26 (OPP) ON -64 ASSY
(B7) -57 (SHOWN) ON -7 INSTL
-58 (OPP) ON -8 INSTL
SEE NOTE 31
SEE SECT. A-A TYP. (4) PLACES
Y 254.00 (REF.)
LDW280-52180-27 (SHOWN) ON -7 INSTL & -65 ASSY
(B8) -28 (OPP) ON -8 INSTL & -66 ASSY
Z 66.819 (REF.)
H
AM (ZONE 6A) (B7)
AM
-55 & -31 ON RH SIDE ONLY IN THIS AREA
-23 (REF.)
-53 (REF)
LDW280-52180-17 (SHOWN)
-18 (OPP)
(ZONE 6A) AL
AL
T (B7)
SECT. E-E TYP. 2 PLACES
AC
Y
AC ZONE 22B SH4
SECT. G-G TYP. (3) PLACES
AN
2 1/2 (TYP)
3 TYP
ZONE 18A T SH4
J ZO
LDW
Y ZONE 20A SH4
LD
V ZONE 20A SH4
-25 (REF.)
-57 (REF)
H ZONE 7A
OUTER LAYER (MAKE FROM .00125 INCONEL 600 & PAINT WITH BLACK PYROMARK PER LPC 280-5)
-53(REF)
-15 (REF)
SEE NOTE 11
-16, -17(REF)
-55(REF) SECTION AM-AM
-57 (REF) SECTION AL-AL
OUTER LAYER (MAKE FROM LDW280-11790-1)
(B7)
(V

VIEW H-H ZONE 5A
ROTATED 90°

SECTION AM-AM (ZONE 5D)
LEFT SIDE
ZONE 5 D

SECTION AM-AM (RIGHT SIDE) (ZONE 5D)
SECTION AL-AL (LEFT SIDE SHOWN)(ZONE 5C)
(RIGHT SIDE OPP)
ZONE 5C

LDW280-52180-1 INSTALLATION (SHOWN)(
-2 INSTALLATION (OPP)(EXCE
(B1) -3 ASSEMBLY (LH SIDE)
-5 ASSEMBLY (RH SIDE)
(B7) -7 INSTALLATION (SHOWN) SAM
-8 INSTALLATION (OPP) SAME A
(B8) -9 ASSY (SHOWN) SAME AS -
-10 ASSY (OPP) SAME AS -5
-63 ASSY (SHOWN)
-64 ASSY (OPP)
-65 ASSY (SHOWN)
-66 ASSY (OPP)
-67 ASSY (SHOWN)
-68 ASSY (OPP)
-69 ASSY (SHOWN)
-70 ASSY (OPP)

02/04

NAS 9-1100

LDW280-52180 SH 3

LDW280-52180 SH 3

03/04 NAS 9-1100

NOTES (CONT'D):

31. ON -7 & -8 INSTL, -53, -55, -57, -58, -59 & -61 BLANKETS CONSIST OF (3) LAYERS OF BRIGHT ROLLED NICKEL FOIL, COMMERCIALLY PURE (.0005 THICK) ANNEALED CONDITION WITH (3) LAYERS OF KNIT PATTERN SQUARE TYPE WIRE CLOTH SLEEVING, 5 TO 7 SQUARES PER LINEAL INCH. WIRE TO BE INCONEL 600 (.0035/.0040) DIA ROUND. OUTER LAYER TO BE MADE FROM .00125 INCONEL 600 PAINTED WITH BLACK PYROMARK AND MADE FROM LDW280-11790-11 AS DEFINED IN FIELD OF DWG.
32. ON -1 & -2 INSTALLATION UPON FINAL INSTALLATION BLANKETS MAY BE TRIMMED TO PROVIDE 1/8" MIN. CLEARANCE AROUND R.C.S. COMBUSTION CHAMBERS.

NOTES (CONT.):

26. TAPE BOTH SIDES & ALL OTHER EXPOSED SURFACES OF LDW280P11168 FRAME WITH GT835M-8 TAPE (TAPE 'A' SEE NOTE #10) TAPE TO OVERLAP 3/16 IN ± 1/8 IN & 15 REQD ON -1, -2 INSTL.
27. BOND GT535L-HA0020 & GT535L-LA0020 VELCRO ZIPPER (HOOK OR PILE) TO SHIELD WITH RTV731 PER LSP14-22601A TYPE II CLASS I (SEE SECT. A-A THRU SECT. G-G FOR APPLICATION.)
28. ATTACH LDW280-52180-15 TO -23 CREATING -3 ASSY AND ATTACH -16 TO -31 CREATING -5 ASSY. USING GS577A-1 STAPLES 1/2 ± 1/4 FROM EDGE AT 2 ± 1/2 INCH SPACING (SEE NOTE 3). APPLY LDW280P10871-11 TAPE AROUND ALL EDGES OF -23, -31, -3 & -5.
29. LDW280P10871-11 TAPE SHALL BE APPLIED AROUND ALL EDGES OF BLANKETS HAVING (1) LAYER OF LDW280P17589-15.
30. FINAL CONFIGURATION OF BLANKETS TO BE DETERMINED FROM ENGINEERING APPROVED MASTER TEMPLATES. (NOTES CONTINUED ZONE 4D).

NOTES:

1. LDW280-52180-11 & -12 BLANKETS TO BE FABRICATED AS PER LPC280-1-2 & -3 & CONSIST OF (1) LAYER OF ALUMINIZED POLYMIDE ("H" FILM) 25 LAYERS OF PREWRINKLED, SUPERINSULATION ALUMINIZED MYLAR FILM, AND (1) LAYER OF ALUMINIZED POLYMIDE ("H" FILM) AS SHOWN. THE OPEN ENDS OF THE MULTIPLE SHEET BLANKETS ARE TO BE STAPLED 1/2 ± 1/4 FROM EDGE AT 4 TO 6 INCH SPACING USING GS577A-1 WIRE STAPLES ONLY WHEN BLANKETS ARE TO BE SPLICED OR HEMMED. SINCE THE SUPER INSULATION IS ALUMINIZED ON ONE SIDE ONLY, IT IS NECESSARY DURING LAY-UP OF THE BLANKET TO POSITION THE ALUMINUM FACE OF ONE SHEET NEXT TO THE MYLAR FACE OF THE ADJACENT SHEET DURING MANUFACTURE OF BLANKETS THE ALUMINUM FACE MUST BE UP. ON INSTALLATION, THE ALUMINUM FACE MUST BE INBOARD.
2. STOCK SIZE OF LDW280-52180-11, -12 15 50 INCHES WIDE BY 20 FEET LONG. FINAL SIZE OF LDW280-52180-11, -12 TO BE DETERMINED ON INSTALLATION. ALUMINIZED POLYMIDE ("H" FILM) & ALUMINIZED MYLAR MAY BE PURCHASED FROM M.C. CORDI & CO. MAMARONECK N.Y. CODE IDENT #24761.
3. GS577A-1 STAPLES MAY BE INSTALLED USING BOSTITCH PLIER P3 (REF).
4. SUPER INSULATION SHALL BE HANDLED WITH LINT FREE NYLON GLOVES.
5. INSPECTION ON END ITEM ONLY. HOLE MAY BE PUNCHED ON ASSEMBLY.

NOTES: (CONT'D)

6. LDW280-52180-15-16-17-18-19-20 & -21, ALUMINIZED POLYIMIDE FILM TO BE PREWRINKLED & LAID UP INTO MULTIPLE SHEET BLANKETS OF 20 LAYERS AS SHOWN. FOR MANUFACTURING INFORMATION SEE NOTE # 1.
7. POLYIMIDE FILM 28 INCHES WIDE X 120 INCHES LONG, ALUMINIZED ONE SIDE ONLY, 2 OHMS PER SQ., MAY BE PURCHASED FROM M.C. CORDI & CO., MAMARONECK, N.Y. CODE IDENT # 24761.
8. FOR APPLICATIONS USING POLYIMIDE FILM USE PRESSURIZE SENSITIVE POLYIMIDE TAPE NO. GT835P-8 (TAPE 'B' NOTE #10) "TAPE ELECTRICAL" OR EQUIVILENT FROM MINN. MINING & MFG CO. CODE IDENT NO. 76381 USE AS REQUIRED IN SPLICE AREA OF LDW280-52180 -15, -16, -17, -18, -19, -20 & -21.
9. SUPER INSULATION TO BE FABRICATED UNDER CONDITIONS THAT CONFORM TO LSP-14-0011, LEVEL C.
10. TAPE 'A' - GT835M-8 - TO BE USED ON INTERNAL SIDE OF BLANKETS ONLY. TAPE 'B' - GT835P-8 - TO BE USED ON EXTERNAL SIDE OF BLANKETS BUT, INSIDE OF ALUMINUM SHIELDING. TAPE 'C' - LDW280P10871-11 - TO BE USED ON EXTERNAL SIDE OF UNSHIELDED BLANKETS. TAPE 'D' - GT535B-2-100 - TO BE APPLIED ON MYLAR SIDE OF BLANKETS IN BUTT SPLICE AREAS
11. ATTACH (1) LAYER OF -45 TO -15 & (1) LAYER OF -46 TO -16 CREATING BLANKET ASSY USING GS577A-1 STAPLES (1/2 ± 1/4 FROM EDGE AT 1 TO 2 INCH SPACING (SEE NOTE 3) -45 & -46 SHALL BE ATTACHED ONLY IN THE AREA OF THE BLANKET THAT IS FREE OF -23 & -31 FOIL. SILICON OXIDE SURFACE TO BE ON OUTBOARD SIDE OF BLANKET. (PURE ALUMINUM SIDE INBOARD) MAKE -45 & -46 FROM LDW280P17589-15.

12. GT535L-HA0020 & GT535L-LA0020 METAL ZIPPER (HOOK
TEMPERATURE 800° VELCRO CLOSURE (LOCATE APPROXIMATELY AS SA
13. ~~BOND GT535L-HA0020 & GT535L-LA0020 VELCRO ZIPPER (HOOK & PILE) TO SHIELD WITH METAL BOND #32~~
~~(UNSUPPORTED FILM) CURE @ 275° FOR 90 MIN (SE~~
~~THRU SECT GG FOR APPLICATION).~~
14. STAPLE GT535L-HA0020 & GT535L-LA0020 VE
(HOOK & PILE) TO BLANKET & TAPE USING GS57
STAPLES (SEE SECT AA THRU SECT GG FOR APP
(SEE NOTE 3).
15. -35 TAPE AS REQD TO BE MADE FROM LDW280-
SILICON OXIDE SURFACE TO BE ON OUTBD SI
BLANKET LOCATE APPROXIMATELY AS SHOWN (
SECT AA THRU SECT GG & SECT AJ FOR APPLICA
16. BLANKET TO BE PREFITTED ON SCALE MODEL.
17. DRAWING MAY BE SCALED FOR DIMENSIONS NO
18. REINFORCE BOTH SIDES OF EACH BLANKET AT
OF GR11B-1 WITH 1X1 INCH PIECE OF GT535B-2
(TYPE 'D' IN NOTE 10) - LOCATION OF GR11B-1 E
4 TO 6 INCHES ON CENTER (SEE DETAIL AE-
FOR TYP APPLICATION).
19. ALL EXCESS GATHERING OF POLYIMIDE FILM (
TO BE TAPED DOWN AS REQ'D USING TAPE "B" (S
20. FOR FINISH OF -1 & -2 SEE DETAIL AG-AG.
21. LDW280-52180-23, -25, -26, -27, -28, -29, -31, -47, -49 & -5
CONSISTS OF (3) LAYERS OF BRIGHT ROLLED NICKEL FO
(.0005 THICK) ANNEALED CONDITION WITH (3) LAYERS O
PATTERN SQ. TYPE WIRE CLOTH SLEEVING, 5 TO 7 SQ.
INCH WIRE INCONEL 600 (.0035/.0040) DIA. ROUND AND
LAYER MADE FROM LDW280-11790-11. SILICON OXIDE S
BE ON OUTBD SIDE OF BLANKET. FABRICATE PER LPC2
APPLY LDW280P10871-11 TAPE AROUND ALL EDGES O
-28, -29, -31, -47, -49 & -51 BLANKET ASSY. SEE DETAIL AH-AH
DETAIL.
22. ~~ON -1 & -2 INSTALLATION LDW 280-52180-23 & -31~~
~~CONSISTS OF (1) LAYER OF BRIGHT ROLLED NICKEL~~
~~COM'L PURE (.005 THICK) ANNEALED CONDITION~~
~~LAYER OF KNIT PATTERN SQ TYPE WIRE CLOTH S~~
~~5 TO 7 SQ PER LINEAL INCH WIRE INCONEL 600 (.0035~~
~~ROUND & (1) OUTER LAYER FROM LDW280-11790-11 S~~
~~OXIDE SURFACE TO BE ON OUTBD SIDE OF BLAN~~
~~FABRICATE PER LPC 280-19 FINISH AS NOTED IN DE~~
23. ~~ATTACH LDW280-52180-15 TO -23 & -16 TO -31 ON -1 & -2 INSTALLA~~
~~STAPLES 1/2 ± 1/4 FROM EDGE @ 1 TO 2 INCH SPACING~~
24. STANDOFFS MAY BE LOCATED WITHIN 1 1/2 INCHE
OF POSITION SHOWN.
25. TEMPLATES REQ'D TO MAKE -25, -26, -27, -
SHALL BE 3/4 INCH LARGER THAN
FULL SCALE MODEL.

MANUFACTURING
UNLESS OTHERWIS
NOTES CHECKED ✓ AP
PART NU
AND ALL OTHER MARKIN
IN REGION MARKED
USE BOTH SIDES IF NEC
FILLET AND INSIDE COR
RADII TOLERANCES
.016R TO .062R ± .010
.063R TO .250R ± .015
OVER .250R ± .030
DEPTH SHOWN FOR TAP
HOLES IS FULL THDS. 2
BEYOND PERMISSIBLE.
EXTERNAL THREAD LEN
SHOWN INCLUDES
2 IMPERFECT THREADS
DO NOT CADMIUM PLAT
HOLES OR SURFACES M
WITH DOUBLE ASTERISK
MISMATCH STEP OF ±
PERMISSIBLE DUE TO C
OF CUTTERS AT INSIDE
INTERSECTING SURFACE
DIAMETERS MARKED
MUST BE CONCENTRIC
FULL
READING
HOLES MUST BE KEPT
CHROME PLATING SOLU
ALL DIMENSIONS SHOW
AFTER CADMIUM PLATI
THICKNESS OF PLATE
TO .0005 MAX. MIN. TH
BE .0002 ON THREADED
NO ALLOWANCE FOR PL
HOLES
125 SURFACE ROUG
INCLUDING REA
PER MIL-STD-1
200 FOR ALL DRILL
REMOVE ALL BURRS.
BREAK ALL EDGES .015
INSPECTION INFORMAT
MINIMUM PERMISSIBLE
AVERAGE EDGE DISTAN
MARKED IS
SYMBOL DENOTES
TO BE MACHINED
UNLESS OTHERWISE SP
TOLERANCE ON FLANG
LENGTHS OF AN, NAS
RIVETS SHORTER THAN
NOT SPECIFIED
TOLERANCE ON LOFTE
DELINEATIONS IS

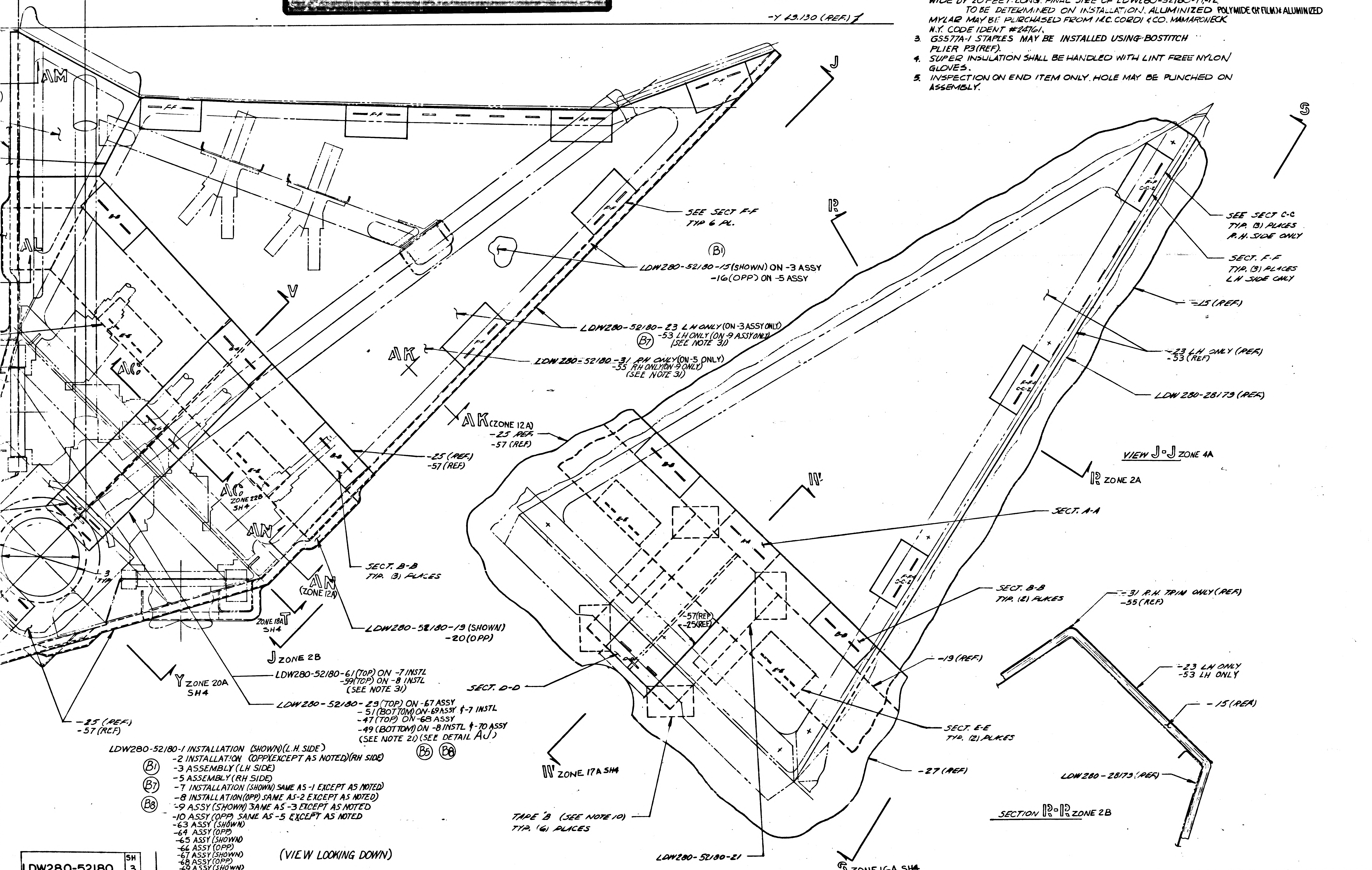
-Y 49.130 (REF.)
AM
AL
AG
AK
AK (ZONE 12A)
AC ZONE 22B SH4
AN
AN (ZONE 12A)
J
R
V
W
S
B1
B7
B5
B8
SEE SECT F-F TYP 6 PL.
LDW280-52180-15 (SHOWN) ON -3 ASSY -16 (OPP) ON -5 ASSY
LDW280-52180-23 LH ONLY (ON -3 ASSY ONLY) -53 LH ONLY (ON -9 ASSY ONLY) (SEE NOTE 31)
LDW280-52180-31 RH ONLY (ON -5 ONLY) -55 RH ONLY (ON -9 ONLY) (SEE NOTE 31)
-25 REF. -57 (REF)
-25 (REF) -57 (REF)
SECT. B-B TYP. (3) PLACES
3 TYP
ZONE 18A T SH4
J ZONE 2B
LDW280-52180-19 (SHOWN) -20 (OPP)
Y ZONE 20A SH4
LDW280-52180-61 (TOP) ON -7 INSTL -59 (TOP) ON -8 INSTL (SEE NOTE 31)
LDW280-52180-29 (TOP) ON -67 ASSY -51 (BOTTOM) ON -69 ASSY & -7 INSTL -47 (TOP) ON -68 ASSY -49 (BOTTOM) ON -8 INSTL & -70 ASSY (SEE NOTE 21) (SEE DETAIL AJ)
-25 (REF.) -57 (REF)
SECT. D-D
W ZONE 17A SH4
TAPE 'B' (SEE NOTE 10) TYP. (6) PLACES
LDW280-52180-21
S ZONE 16A SH4
SEE SECT C-C TYP. (3) PLACES R.H. SIDE ONLY
SECT. F-F TYP. (3) PLACES L.H. SIDE ONLY
-15 (REF)
-23 LH ONLY (REF) -53 (REF)
LDW280-28173 (REF)
VIEW J-J ZONE 4A
R ZONE 2A
SECT. A-A
SECT. B-B TYP. (2) PLACES
-31 R.H. TRIM ONLY (REF) -55 (REF)
-57 (REF) -25 (REF)
-19 (REF)
-23 LH ONLY -53 LH ONLY
-15 (REF)
SECT. E-E TYP. (2) PLACES
-27 (REF)
LDW280-28173 (REF)
SECTION R-R ZONE 2B
F-F
B-B
C-C
E-E
A-A

LDW280-52180-1 INSTALLATION (SHOWN) (L.H. SIDE)
-2 INSTALLATION (OPP) (EXCEPT AS NOTED) (RH SIDE)
-3 ASSEMBLY (LH SIDE)
-5 ASSEMBLY (RH SIDE)
-7 INSTALLATION (SHOWN) SAME AS -1 EXCEPT AS NOTED)
-8 INSTALLATION (OPP) SAME AS -2 EXCEPT AS NOTED)
-9 ASSY (SHOWN) SAME AS -3 EXCEPT AS NOTED
-10 ASSY (OPP) SAME AS -5 EXCEPT AS NOTED
-63 ASSY (SHOWN)
-64 ASSY (OPP)
-65 ASSY (SHOWN)
-66 ASSY (OPP)
-67 ASSY (SHOWN)
-68 ASSY (OPP)
-69 ASSY (SHOWN)
-70 ASSY (OPP)

(VIEW LOOKING DOWN)

LDW280-52180 SH 3

GRUMMAN AIRCRAFT ENGRG CORP., BETHPAG
SIZE J CODE IDENT NO. 26512 LDW280-
LM
MODEL OR END ITEM SCALE FULL

NOTES:

1. LDW280-52180-11 & -12 BLANKETS TO BE FABRICATED AS PER LPC280-1-2 & -3 & CONSIST OF (1) LAYER OF ALUMINIZED POLYMIDE ("H" FILM) 25 LAYERS OF PREWRINKLED, SUPERINSULATION ALUMINIZED MYLAR FILM, AND (1) LAYER OF ALUMINIZED POLYMIDE ("H" FILM) AS SHOWN. THE OPEN ENDS OF THE MULTIPLE SHEET BLANKETS ARE TO BE STAPLED 1/2 ± 1/4 FROM EDGE AT 4 TO 6 INCH SPACING USING GS577A-1 WIRE STAPLES ONLY WHEN BLANKETS ARE TO BE SPLICED OR HEMMED. SINCE THE SUPER INSULATION IS ALUMINIZED ON ONE SIDE ONLY, IT IS NECESSARY DURING LAY-UP OF THE BLANKET TO POSITION THE ALUMINUM FACE OF ONE SHEET NEXT TO THE MYLAR FACE OF THE ADJACENT SHEET DURING MANUFACTURE OF BLANKETS THE ALUMINUM FACE MUST BE UP. ON INSTALLATION, THE ALUMINUM FACE MUST BE INBOARD.
2. STOCK SIZE OF LDW280-52180-11,-12 IS 50 INCHES WIDE BY 20 FEET LONG. FINAL SIZE OF LDW280-52180-11,-12, TO BE DETERMINED ON INSTALLATION. ALUMINIZED POLYMIDE (H FILM) & ALUMINIZED MYLAR MAY BE PURCHASED FROM M.C. CORDI & CO. MAMARONECK N.Y. CODE IDENT #24761.
3. GS577A-1 STAPLES MAY BE INSTALLED USING BOSTITCH PLIER P3 (REF).
4. SUPER INSULATION SHALL BE HANDLED WITH LINT FREE NYLON GLOVES.
5. INSPECTION ON END ITEM ONLY. HOLE MAY BE PUNCHED ON ASSEMBLY.

NOTES: (CONT'D)

6. LDW280-52180-15-16-17-18-19-20 & -21, ALUMINIZED POLYIMIDE FILM TO BE PREWRINKLED & LAID UP INTO MULTIPLE SHEET BLANKETS OF 20 LAYERS AS SHOWN. FOR MANUFACTURING INFORMATION SEE NOTE # 1
7. POLYIMIDE FILM 28 INCHES WIDE X 120 INCHES LONG, ALUMINIZED ONE SIDE ONLY, 2 OHMS PER SQ., MAY BE PURCHASED FROM M.C. CORDI & CO., MAMARONECK, N.Y. CODE IDENT # 24761.
8. FOR APPLICATIONS USING POLYIMIDE FILM USE PRESSURE SENSITIVE POLYIMIDE TAPE NO. GT835P-8 (TAPE 'B' NOTE # 10) "TAPE ELECTRICAL" OR EQUIVILENT FROM MINN. MINING & MFG CO. CODE IDENT NO. 76381 USE AS REQUIRED IN SPLICE AREA OF LDW280-52180 -15,-16,-17-18-19-20 & -21.
9. SUPER INSULATION TO BE FABRICATED UNDER CONDITIONS THAT CONFORM TO LSP-14-0011, LEVEL C.
10. TAPE 'A'-GT835M-8-TO BE USED ON INTERNAL SIDE OF BLANKETS ONLY. TAPE 'B'-GT835P-8-TO BE USED ON EXTERNAL SIDE OF BLANKETS BUT, INSIDE OF ALUMINUM SHIELDING. TAPE 'C'-LDW280P10871-11-TO BE USED ON EXTERNAL SIDE OF UNSHIELDED BLANKETS. TAPE 'D'-GT535B-2-100-TO BE APPLIED ON MYLAR SIDE OF BLANKETS IN BUTT SPLICE AREAS
11. ATTACH (1) LAYER OF -45 TO -15 & (1) LAYER OF -46 TO -16 CREATING BLANKET ASSY USING GS577A-1 STAPLES (1/2 ± 1/4 FROM EDGE AT 1 TO 2 INCH SPACING (SEE NOTE 3) -45 & -46 SHALL BE ATTACHED ONLY IN THE AREA OF THE BLANKET THAT IS FREE OF -23 & -31 FOIL. SILICON OXIDE SURFACE TO BE ON OUTBOARD SIDE OF BLANKET. (PURE ALUMINUM SIDE INBOARD) MAKE -45 & -46 FROM LDW280P17589-15.
12. GT535L-HA0020 & GT535L-LA0020 METAL ZIPPER (HOOK & PILE) HIGH TEMPERATURE 800° VELCRO CLOSURE (LOCATE APPROXIMATELY AS SHOWN).
13. ~~BOND GT535L-HA0020 & GT535L-LA0020 VELCRO ZIPPER (HOOK & PILE) TO SHIELD WITH METAL BOND #385 (UNSUPPORTED FILM) CURE @ 275° FOR 90 MIN (SEE SECT AA THRU SECT GG FOR APPLICATION).~~
14. STAPLE GT535L-HA0020 & GT535L-LA0020 VELCRO ZIPPER (HOOK & PILE) TO BLANKET & TAPE USING GS677A-2 STAPLES (SEE SECT AA THRU SECT GG FOR APPLICATION) (SEE NOTE 3).
15. -35 TAPE AS REQD TO BE MADE FROM LDW280-11790-11. SILICON OXIDE SURFACE TO BE ON OUTBD SIDE OF BLANKET LOCATE APPROXIMATELY AS SHOWN (SEE SECT AA THRU SECT GG & SECT AJ FOR APPLICATION) (SEE NOTE 3)
16. BLANKET TO BE PREFITTED ON SCALE MODEL.
17. DRAWING MAY BE SCALED FOR DIMENSIONS NOT SHOWN.
18. REINFORCE BOTH SIDES OF EACH BLANKET AT LOCATION OF GR11B-1 WITH 1X1 INCH PIECE OF GT535B-2-100 TAPE (TYPE 'D' IN NOTE 10) - LOCATION OF GR11B-1 EVERY 4 TO 6 INCHES ON CENTER (SEE DETAIL AE-AE FOR TYP APPLICATION).
19. ALL EXCESS GATHERING OF POLYIMIDE FILM (FOLDS) TO BE TAPED DOWN AS REQD USING TAPE "B" (SEE NOTE 10).
20. FOR FINISH OF -1 & -2 SEE DETAIL AG-AG.
21. LDW280-52180-23,-25,-26,-27,-28,-29,-31,-47,-49 & -51 BLANKET CONSISTS OF (3) LAYERS OF BRIGHT ROLLED NICKEL FOIL COML PURE (.0005 THICK) ANNEALED CONDITION WITH (3) LAYERS OF KNIT PATTERN SQ. TYPE WIRE CLOTH SLEEVING, 5 TO 7 SQ. PER LINEAL INCH WIRE INCONEL 600 (.0035/.0040) DIA. ROUND AND (1) OUTER LAYER MADE FROM LDW280-11790-11. SILICON OXIDE SURFACE TO BE ON OUTBD SIDE OF BLANKET. FABRICATE PER LPC280-19. APPLY LDW280P10871-11 TAPE AROUND ALL EDGES OF -23,-25,-26,-27,-28,-29,-31,-47,-49 & -51 BLANKET ASSY. SEE DETAIL AH-AH FOR WELD DETAIL.
22. ~~ON -1 & -2 INSTALLATION LDW280-52180-23 & -31 BLANKET CONSISTS OF (1) LAYER OF BRIGHT ROLLED NICKLE FOIL COM'L PURE (.005 THICK) ANNEALED CONDITION WITH (1) LAYER OF KNIT PATTERN SQ TYPE WIRE CLOTH SLEEVING 5 TO 7 SQ PER LINEAL INCH WIRE INCONEL 600 (.0035/.0040) DIA ROUND & (1) OUTER LAYER FROM LDW280-11790-11 SILICON OXIDE SURFACE TO BE ON OUTBD SIDE OF BLANKET. FABRICATE PER LPC 280-"19". FINISH AS NOTED IN DETAIL AG-AG~~
23. ~~ATTACH LDW280-52180-15 TO 23 & -16 TO 31 ON 1 & 2 INSTALLATION USING GS577A-1 STAPLES 1/2 ± 1/4 FROM EDGE @ 1 TO 2 INCH SPACING (SEE NOTE 3)~~
24. STANDOFFS MAY BE LOCATED WITHIN 1 1/2 INCHES OF POSITION SHOWN.
25. TEMPLATES REQ'D TO MAKE -25,-26,-27,-28, SHALL BE 3/4 INCH LARGER THAN EXISTING FULL SCALE MODEL.

NOTES (CONT.):

26. TAPE BOTH SIDES & ALL OTHER EXPOSED SURFACES OF LDW280P11168 FRAME WITH GT835M-8 TAPE (TAPE 'A' SEE NOTE #10) TAPE TO OVERLAP 3/16 IN ± 1/8 IN & 15 REQD ON -1,-2 INSTL.
27. BOND GT535L-HA0020 & GT535L-LA0020 VELCRO ZIPPER (HOOK OR PILE) TO SHIELD WITH RTV731 PER LSP14-22601A TYPE II CLASS I (SEE SECT. A-A THRU SECT. G-G FOR APPLICATION.)
28. ATTACH LDW280-52180-15 TO -23 CREATING -3 ASSY AND ATTACH -16 TO -31 CREATING -5 ASSY. USING GS577A-1 STAPLES 1/2 ± 1/4 FROM EDGE AT 2 ± 1/2 INCH SPACING (SEE NOTE 3). APPLY LDW280P10871-11 TAPE AROUND ALL EDGES OF -23,-31,-3 & -5.
29. LDW280P10871-11 TAPE SHALL BE APPLIED AROUND ALL EDGES OF BLANKETS HAVING (1) LAYER OF LDW280P17589-15.
30. FINAL CONFIGURATION OF BLANKETS TO BE DETERMINED FROM ENGINEERING APPROVED MASTER TEMPLATES. (NOTES CONTINUED ZONE 4D).

NOTES (CONT'D):

31. ON -7 & -8 INSTL, -53,-55,-57,-58,-59 & -61 BLANKETS CONSIST OF (3) LAYERS OF BRIGHT ROLLED NICKEL FOIL, COMMERCIALLY PURE (.0005 THICK) ANNEALED CONDITION WITH (3) LAYERS OF KNIT PATTERN SQUARE TYPE WIRE CLOTH SLEEVING, 5 TO 7 SQUARES PER LINEAL INCH. WIRE TO BE INCONEL 600 (.0035/.0040) DIA ROUND. OUTER LAYER TO BE MADE FROM .00125 INCONEL 600 PAINTED WITH BLACK PYROMARK AND MADE FROM LDW280-11790-11 AS DEFINED IN FIELD OF DWG.
32. ON -1 & -2 INSTALLATION UPON FINAL INSTALLATION BLANKETS MAY BE TRIMMED TO PROVIDE 1/8" MIN. CLEARANCE AROUND R.C.S. COMBUSTION CHAMBERS.

MANUFACTURING OPERATIONS
UNLESS OTHERWISE SPECIFIED
NOTES CHECKED √ APPLY TO THIS DWG.

PART NUMBER AND ALL OTHER MARKINGS IN REGION MARKED ⊠ USE BOTH SIDES IF NECESSARY.

FILLET AND INSIDE CORNER RADII TOLERANCES
.016R TO .062R ± .010
.063R TO .250R ± .015
OVER .250R ± .030

DEPTH SHOWN FOR TAPPED HOLES IS FULL THDS. 2-3 IMP THDS. BEYOND PERMISSIBLE.

EXTERNAL THREAD LENGTH SHOWN INCLUDES 2 IMPERFECT THREADS MAX.

DO NOT CADMIUM PLATE & PAINT HOLES OR SURFACES MARKED WITH DOUBLE ASTERISK.

MISMATCH STEP OF ± .005 PERMISSIBLE DUE TO CHANGE OF CUTTERS AT INSIDE INTERSECTING SURFACES.

DIAMETERS MARKED MUST BE CONCENTRIC WITHIN FULL INDICATOR READING

HOLES MUST BE KEPT FREE OF CHROME PLATING SOLUTION.

ALL DIMENSIONS SHOWN TO BE MET AFTER CADMIUM PLATING. THICKNESS OF PLATE .0003 MIN. TO .0005 MAX. MIN. THICKNESS TO BE .0002 ON THREADED AREAS. NO ALLOWANCE FOR PLATING IN HOLES

125 √ SURFACE ROUGHNESS INCLUDING REAMED HOLES PER MIL-STD-10

200 √ FOR ALL DRILLED HOLES

REMOVE ALL BURRS. BREAK ALL EDGES .015-.031

INSPECTION INFORMATION MINIMUM PERMISSIBLE AVERAGE EDGE DISTANCE MARKED IS

SYMBOL ∫ DENOTES SURFACE TO BE MACHINED

UNLESS OTHERWISE SPECIFIED TOLERANCE ON FLANGES IS ± 1/32

LENGTHS OF AN, NAS & MS AL ALY RIVETS SHORTER THAN 1 INCH ARE NOT SPECIFIED

TOLERANCE ON LOFTED DELINEATIONS IS

DWG SIZE 34 X 144

PRINTING INFO ONLY

PRINT TRIM LINE

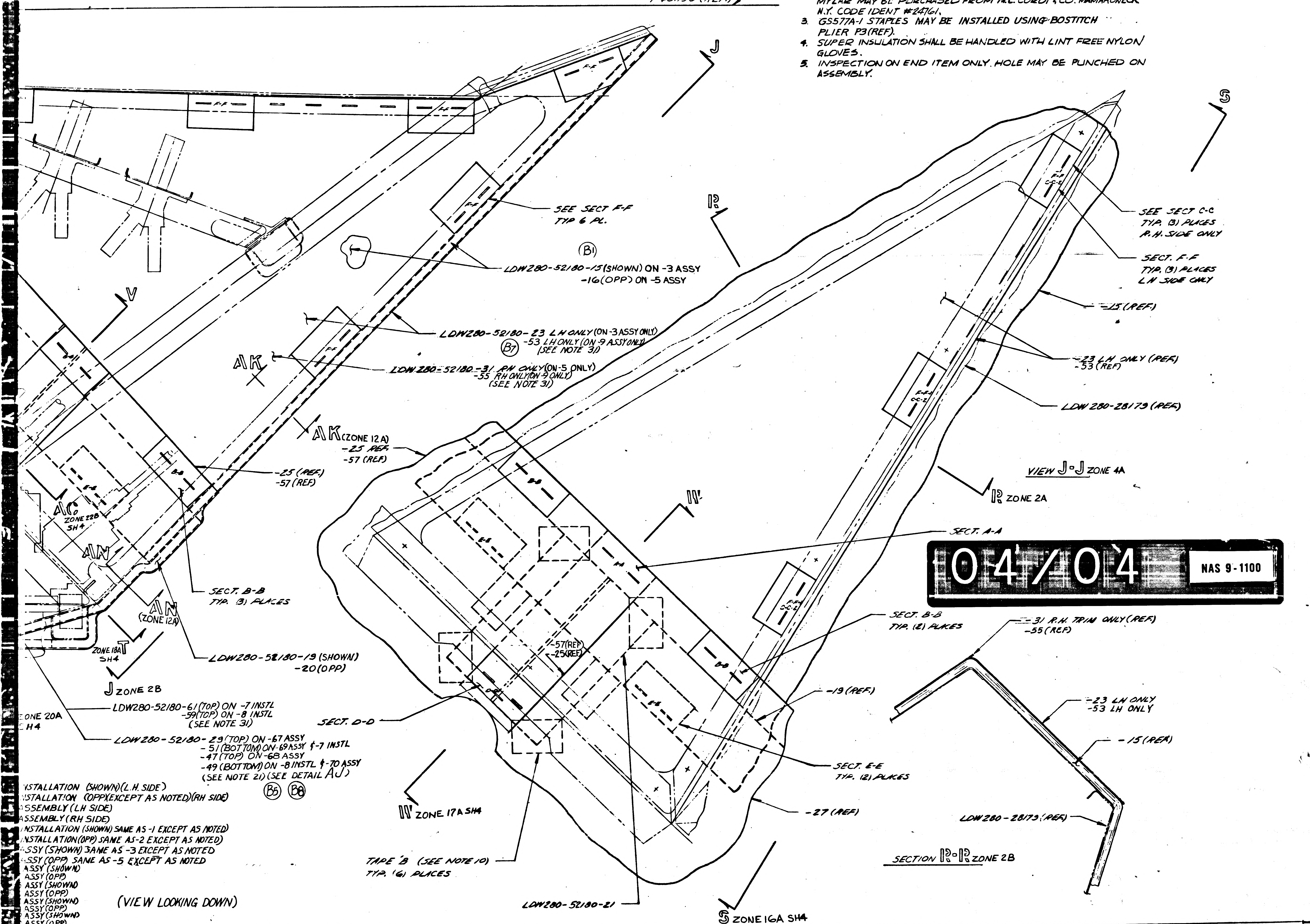
-Y 49.130 (REF.)
J
S
R
V
AK
AK (ZONE 12A)
SEE SECT F-F TYP 6 PL.
B1
LDW280-52180-15 (SHOWN) ON -3 ASSY -16 (OPP) ON -5 ASSY
LDW280-52180-23 LH ONLY (ON -3 ASSY ONLY) -53 LH ONLY (ON -9 ASSY ONLY) (SEE NOTE 31)
B7
LDW280-52180-31 RH ONLY (ON -5 ONLY) -55 RH ONLY (ON -9 ONLY) (SEE NOTE 31)
-25 REF. -57 (REF)
-25 (REF.) -57 (REF)
AC ZONE 22B SH4
AN
AN (ZONE 12A)
SECT. B-B TYP. (3) PLACES
T ZONE 18A SH4
LDW280-52180-19 (SHOWN) -20 (OPP)
J ZONE 2B
ZONE 20A SH4
LDW280-52180-61 (TOP) ON -7 INSTL -59 (TOP) ON -8 INSTL (SEE NOTE 31)
SECT. D-D
LDW280-52180-29 (TOP) ON -67 ASSY -51 (BOTTOM) ON -69 ASSY & -7 INSTL -47 (TOP) ON -68 ASSY -49 (BOTTOM) ON -8 INSTL & -70 ASSY (SEE NOTE 21) (SEE DETAIL AJ)
B5
B8
W
W ZONE 17A SH4
TAPE 'B' (SEE NOTE 10) TYP. (6) PLACES
LDW280-52180-21
-57 (REF) -25 (REF)
S ZONE 16A SH4
SEE SECT C-C TYP. (3) PLACES R.H. SIDE ONLY
SECT. F-F TYP. (3) PLACES LH SIDE ONLY
-15 (REF.)
-23 LH ONLY (REF) -53 (REF)
LDW280-28173 (REF.)
VIEW J-J ZONE 4A
R ZONE 2A
SECT. A-A
SECT. B-B TYP. (2) PLACES
-31 R.H. TRIM ONLY (REF.) -55 (REF)
-19 (REF.)
-23 LH ONLY -53 LH ONLY
-15 (REF.)
SECT. E-E TYP. (2) PLACES
-27 (REF.)
LDW280-28173 (REF.)
SECTION R-R ZONE 2B

INSTALLATION (SHOWN) (L.H. SIDE)
INSTALLATION (OPP) (EXCEPT AS NOTED) (RH SIDE)
ASSEMBLY (LH SIDE)
ASSEMBLY (RH SIDE)
INSTALLATION (SHOWN) SAME AS -1 EXCEPT AS NOTED)
INSTALLATION (OPP) SAME AS -2 EXCEPT AS NOTED)
ASSY (SHOWN) SAME AS -3 EXCEPT AS NOTED
ASSY (OPP) SAME AS -5 EXCEPT AS NOTED
ASSY (SHOWN)
ASSY (OPP)
ASSY (SHOWN)
ASSY (OPP)
ASSY (SHOWN)
ASSY (OPP)
ASSY (SHOWN)
ASSY (OPP)

(VIEW LOOKING DOWN)

04/04 NAS 9-1100

	GRUMMAN AIRCRAFT ENGRG CORP., BETHPAGE, L. I., NEW YORK
LM	SIZE J · CODE IDENT NO. 26512 · LDW280-52180 · B
MODEL OR END ITEM	SCALE FULL · SHEET 3 OC

LDW280-52180 B

4FR

01/03 NAS 9-1100

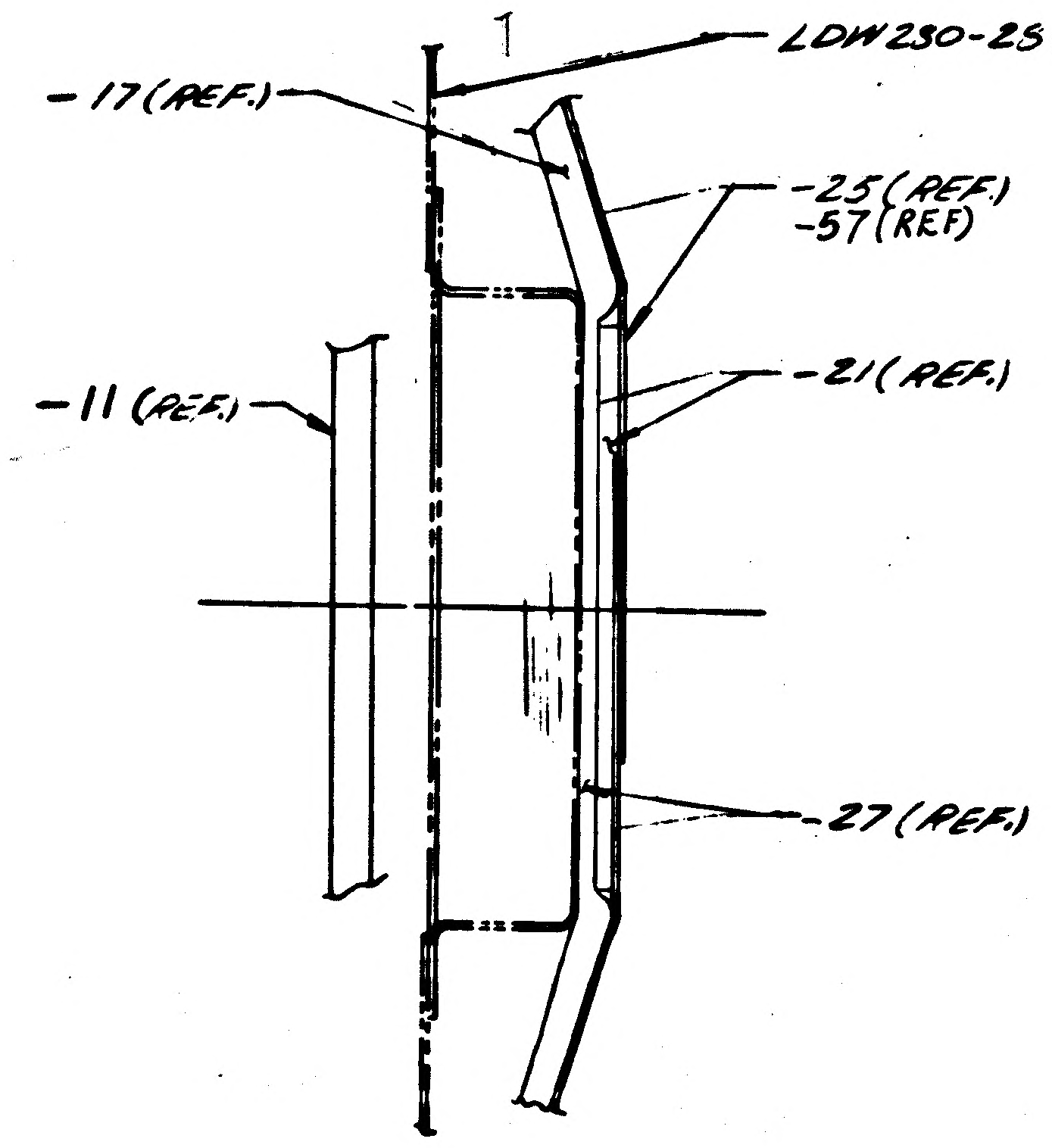
LDW230-28495(REF.)
-17(REF.)
-25(REF.)
-57(REF)
-11(REF.)
-21(REF.)
-27(REF.)

SECTION AB-AB ZONE 7B SH3

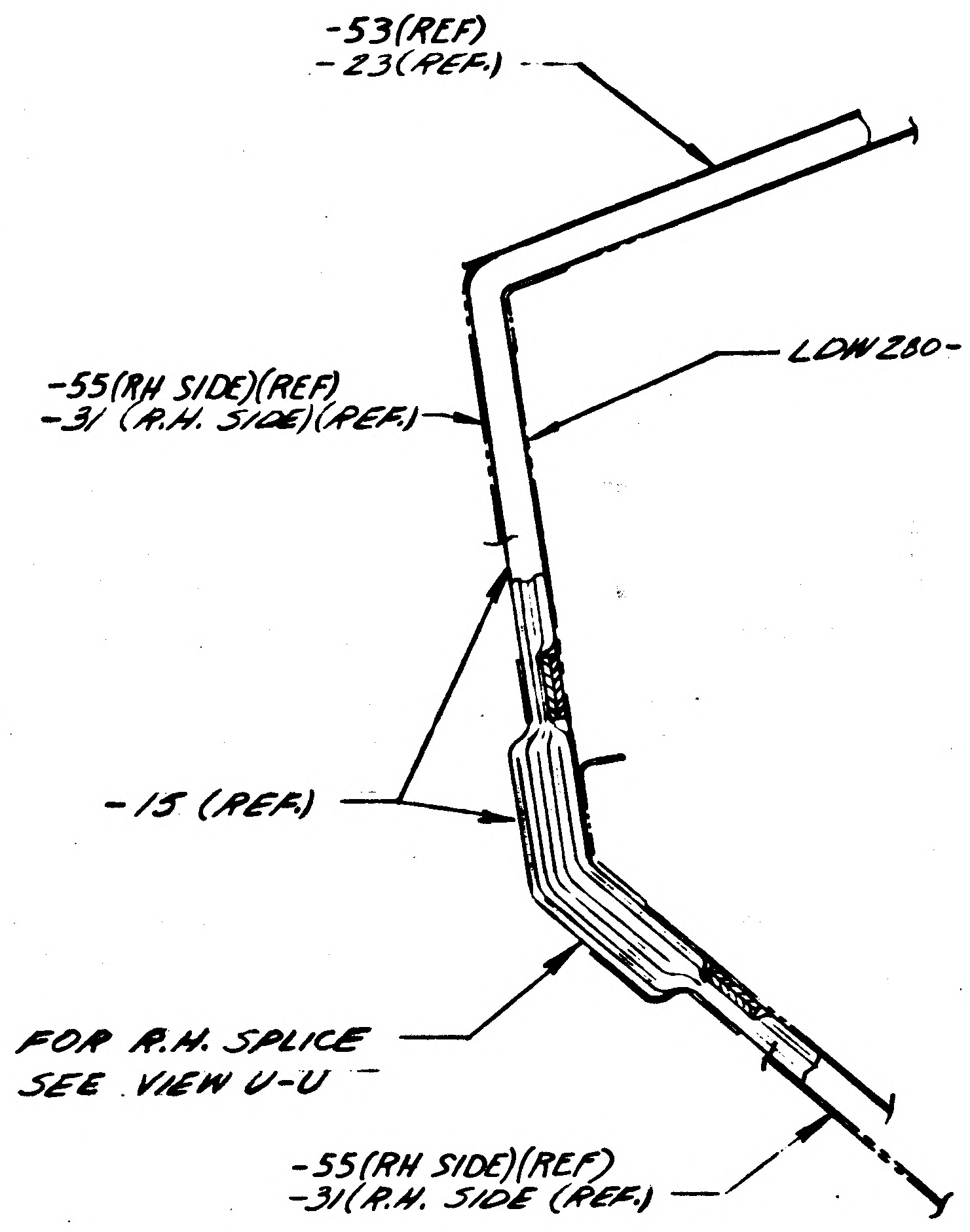
-53(REF)
-23(REF.)
LDW280-23179(REF.)
-55(RH SIDE)(REF)
-31(R.H. SIDE)(REF.)
-15(REF.)
FOR R.H. SPLICE
SEE VIEW U-U
-55(RH SIDE)(REF)
-31(R.H. SIDE (REF.)

SECTION AA-AA ZONE 8D SH3

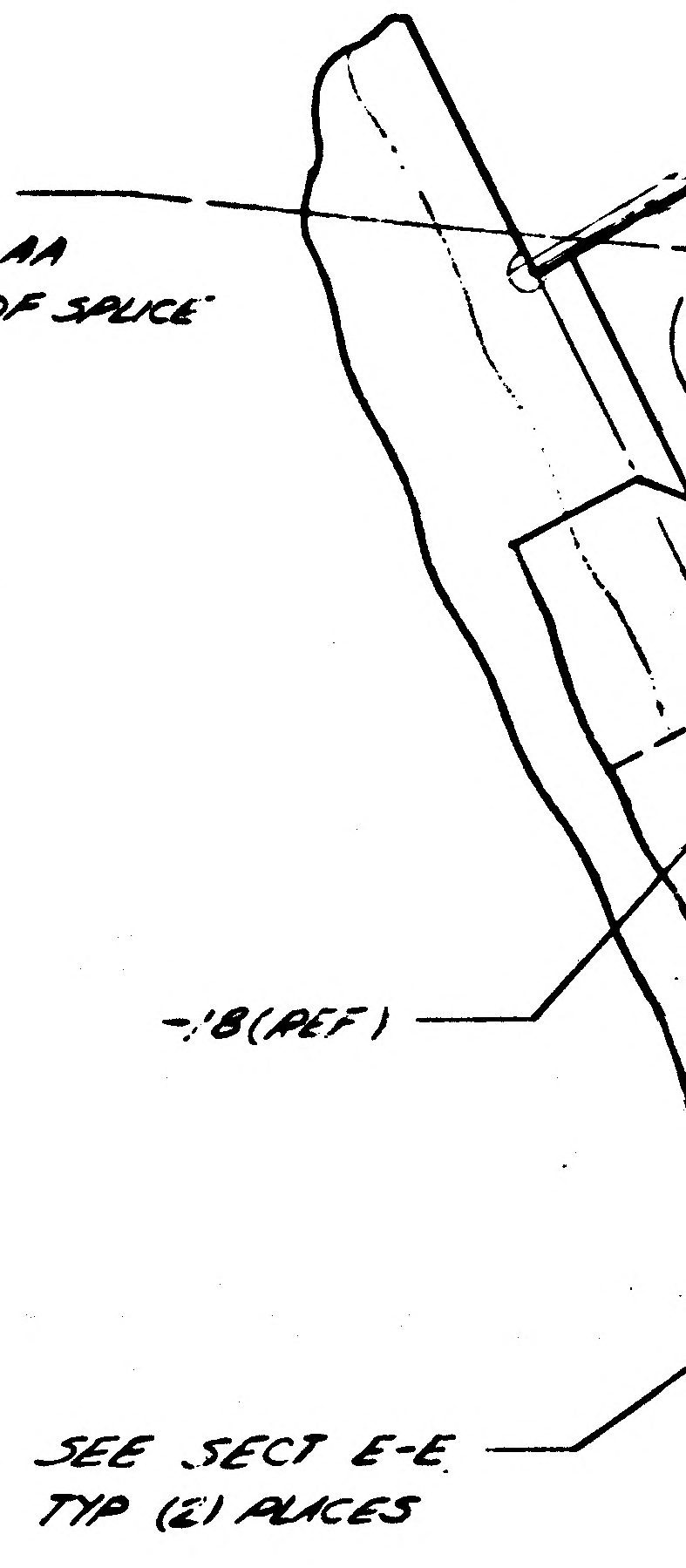
-16 SPLICE
SEE SECT AA-AA
FOR DETAIL OF SPLICE
-18(REF.)
SEE SECT E-E
TYP (2) PLACES

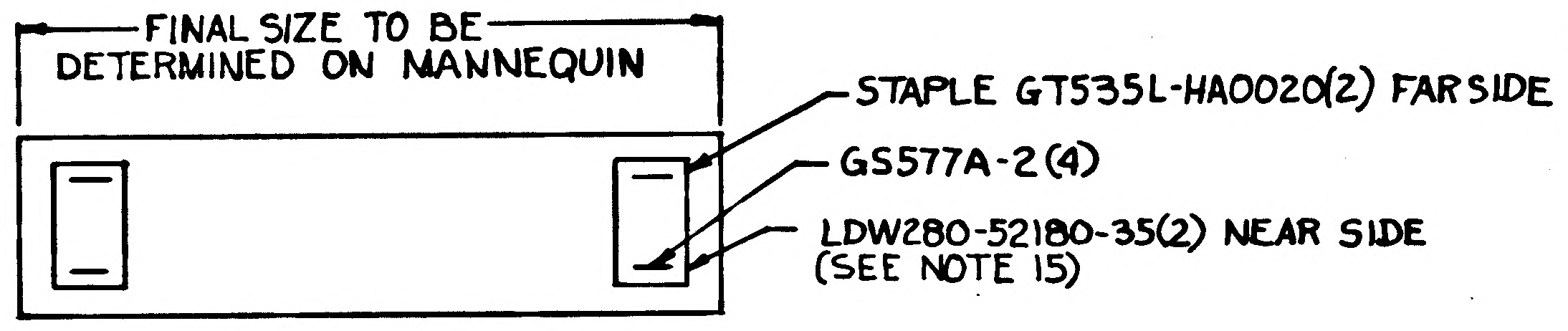
FINAL SIZE TO BE DETERMINED ON MANNEQUIN
STAPLE GT535L-HA0020(2) FAR SIDE
GS577A-2(4)
LDW280-52180-35(2) NEAR SIDE
(SEE NOTE 15)

B5 DETAIL AJ (ZONE 4A)
(TYP FOR -47,-49,-51 PATCH ASSY)
(NO SCALE)
ZONE 4A

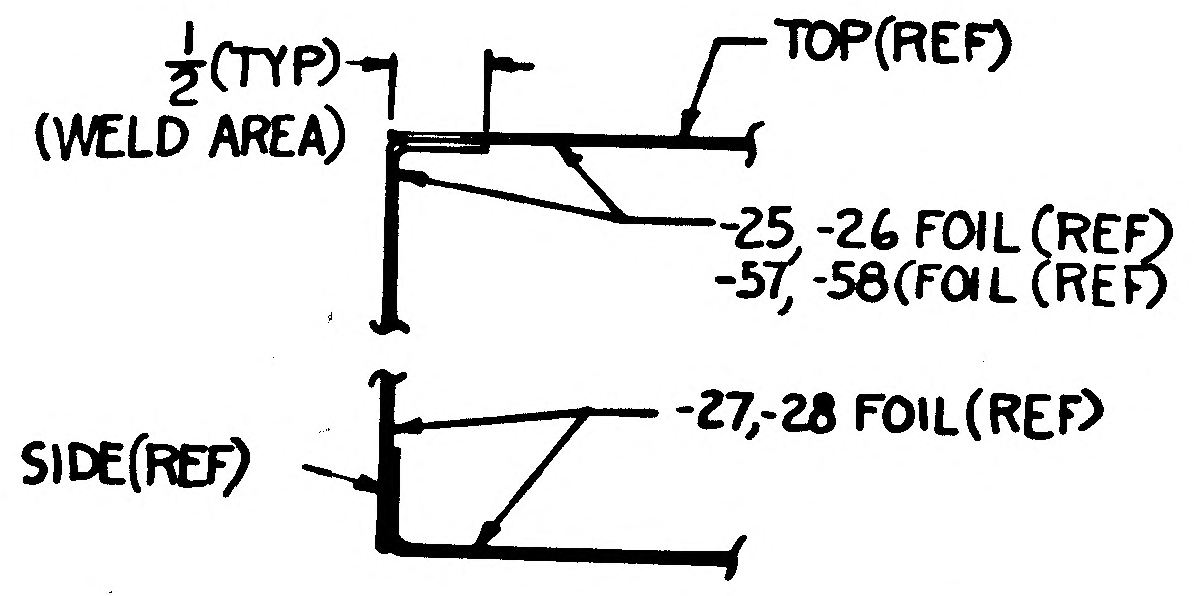
1/2(TYP)
(WELD AREA)
TOP(REF)
-25,-26 FOIL(REF)
-57,-58 FOIL(REF)
SIDE(REF)
-27,-28 FOIL(REF)

DETAIL AH-AH B1
SEE NOTE 21

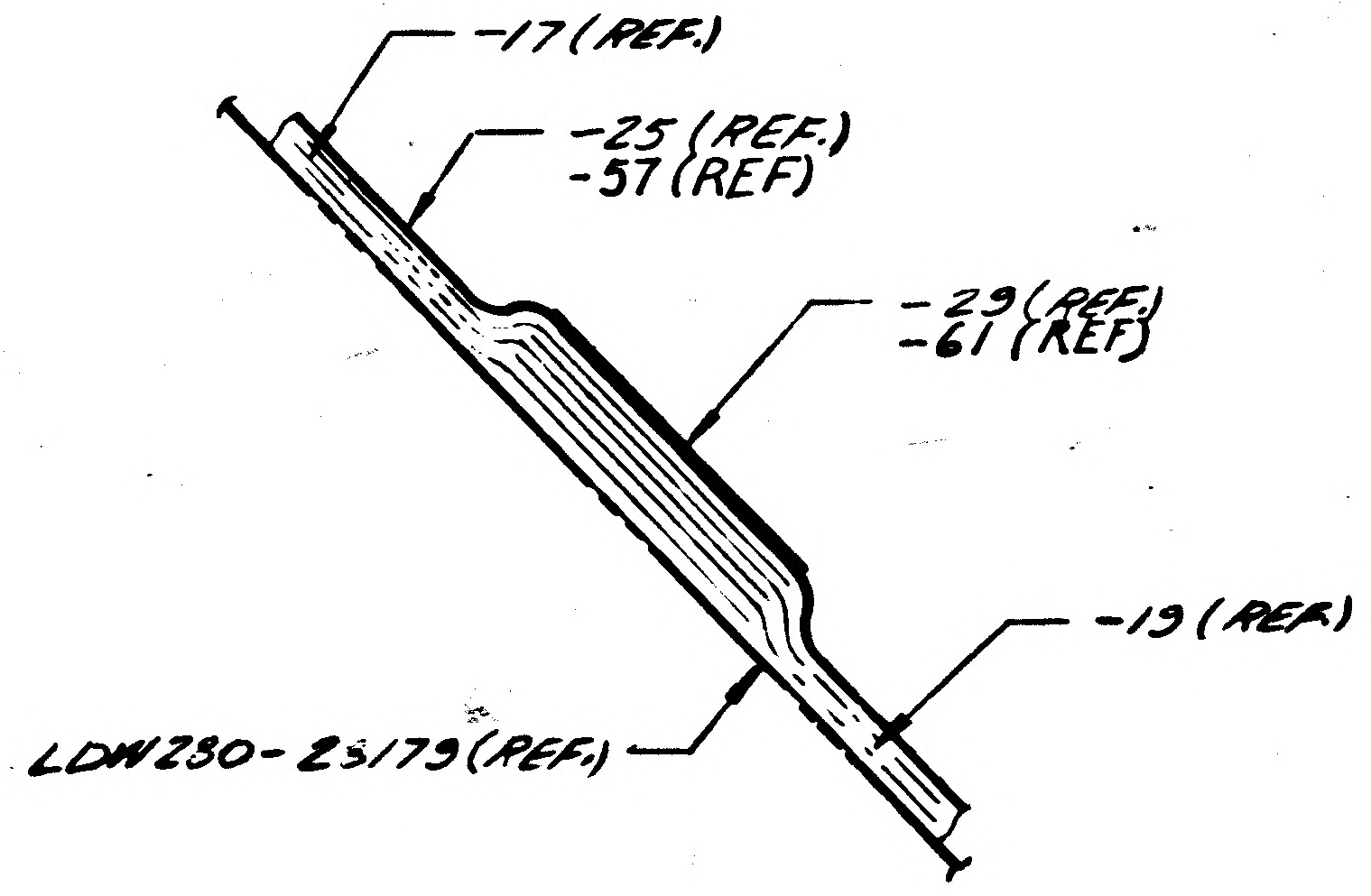
-17(REF.)
-25(REF.)
-57(REF)
-29(REF.)
-61(REF)
-19(REF.)
LDW230-23179(REF.)

SECTION AC-AC ZONE 4B SH 3

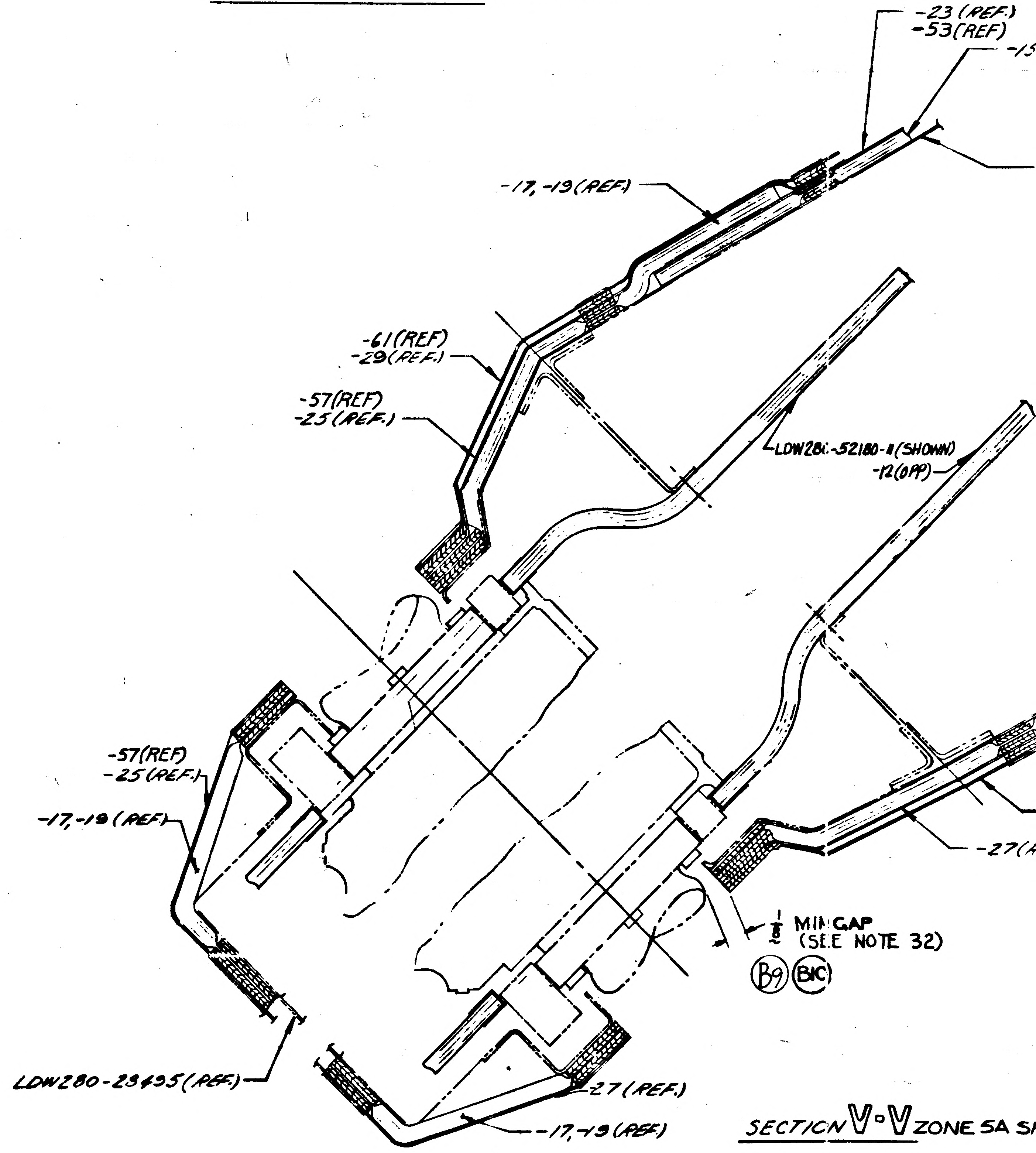
-23(REF.)
-53(REF)
-17,-19(REF.)
-61(REF)
-29(REF.)
-57(REF)
-25(REF.)
LDW280-52180-11(SHOWN)
-12(OPP)
-57(REF)
-25(REF.)
-17,-19(REF.)
-27(
1/8 MIN GAP
(SEE NOTE 32)
B9 B1C
LDW280-23495(REF.)
-27(REF.)
-17,-19(REF.)

SECTION V-V ZONE 5A S

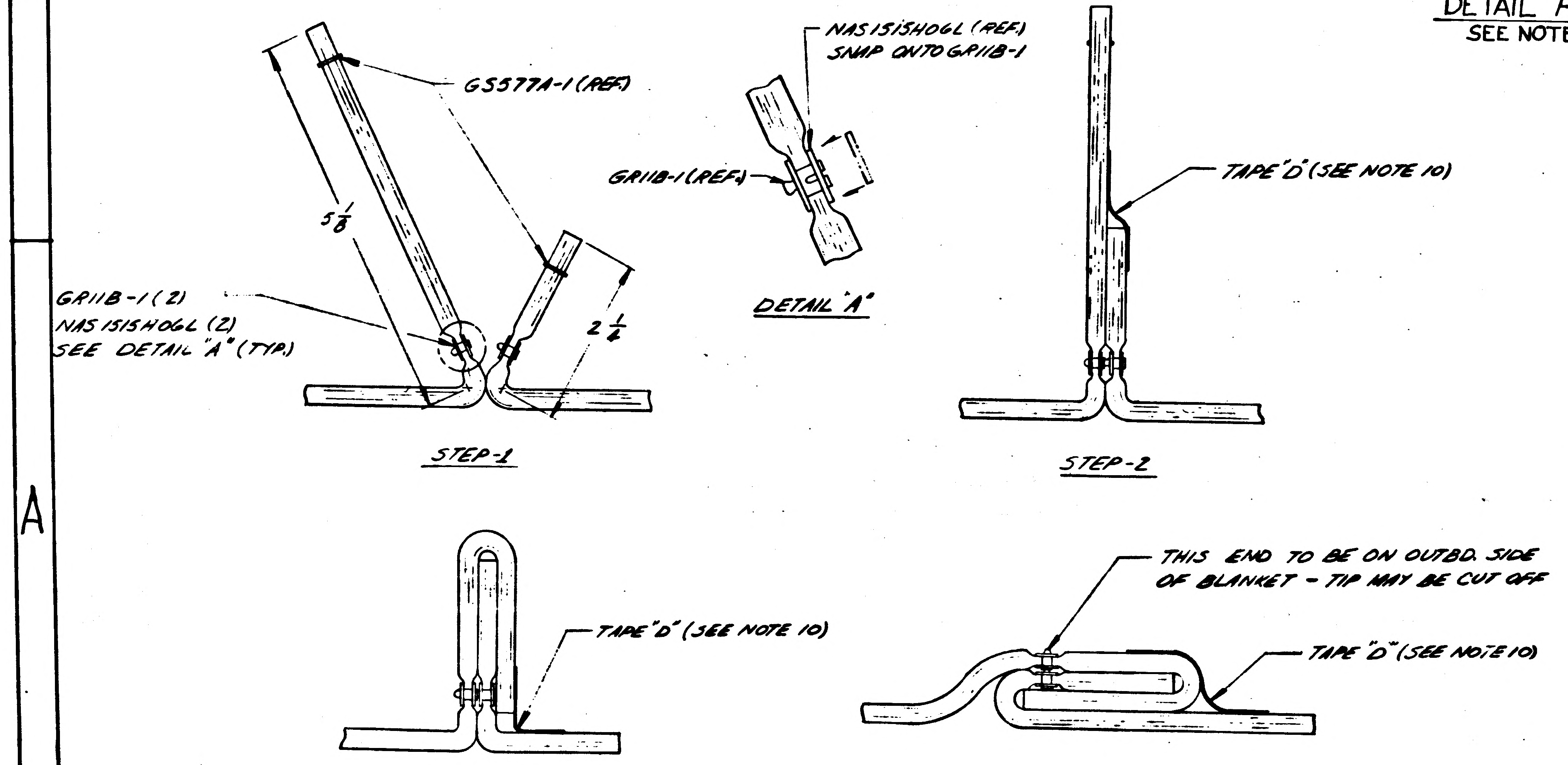
GS577A-1(REF.)
5 1/8
2 1/4
GR11B-1(2)
NAS1515HOGL(2)
SEE DETAIL "A"(TYP.)
NAS1515HOGL(REF.)
SNAP ONTO GR11B-1
GR11B-1(REF.)
TAPE "D"(SEE NOTE 10)
TAPE "D"(SEE NOTE 10)
THIS END TO BE ON OUTBD. SIDE
OF BLANKET - TIP MAY BE CUT OFF
TAPE "D"(SEE NOTE 10)

DETAIL "A"

STEP-1

STEP-2

STEP-3

STEP-4

DETAIL AE-AE ZONE 20B
TYP BLANKET HEM FOLD PROCEDURE (SEE NOTE #18)

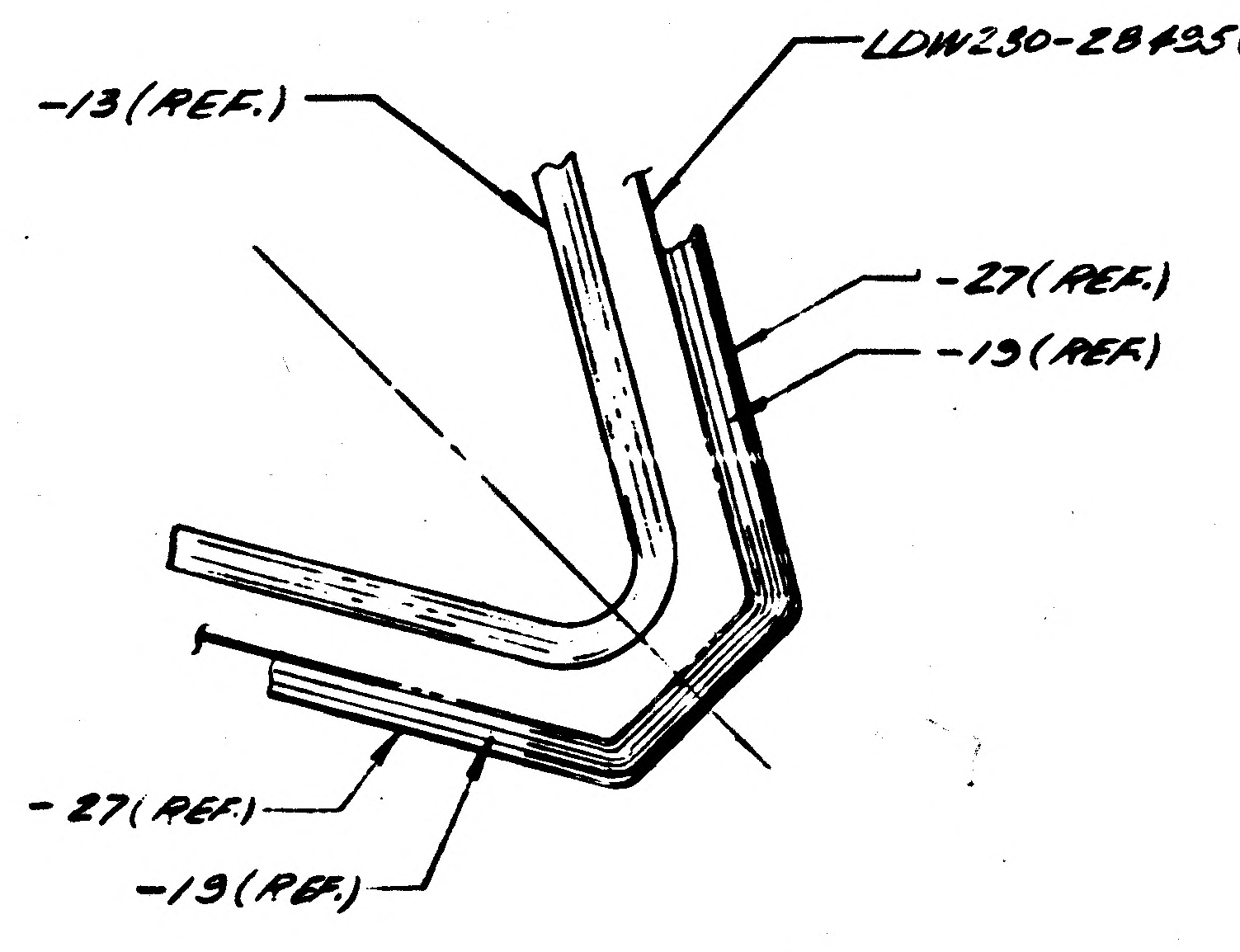
LDW230-28495(REF.)
-13(REF.)
-27(REF.)
-19(REF.)
-27(REF.)
-19(REF.)

SECTION AD-AD ZONE 6C SH3

LDW280-52180	SH 4

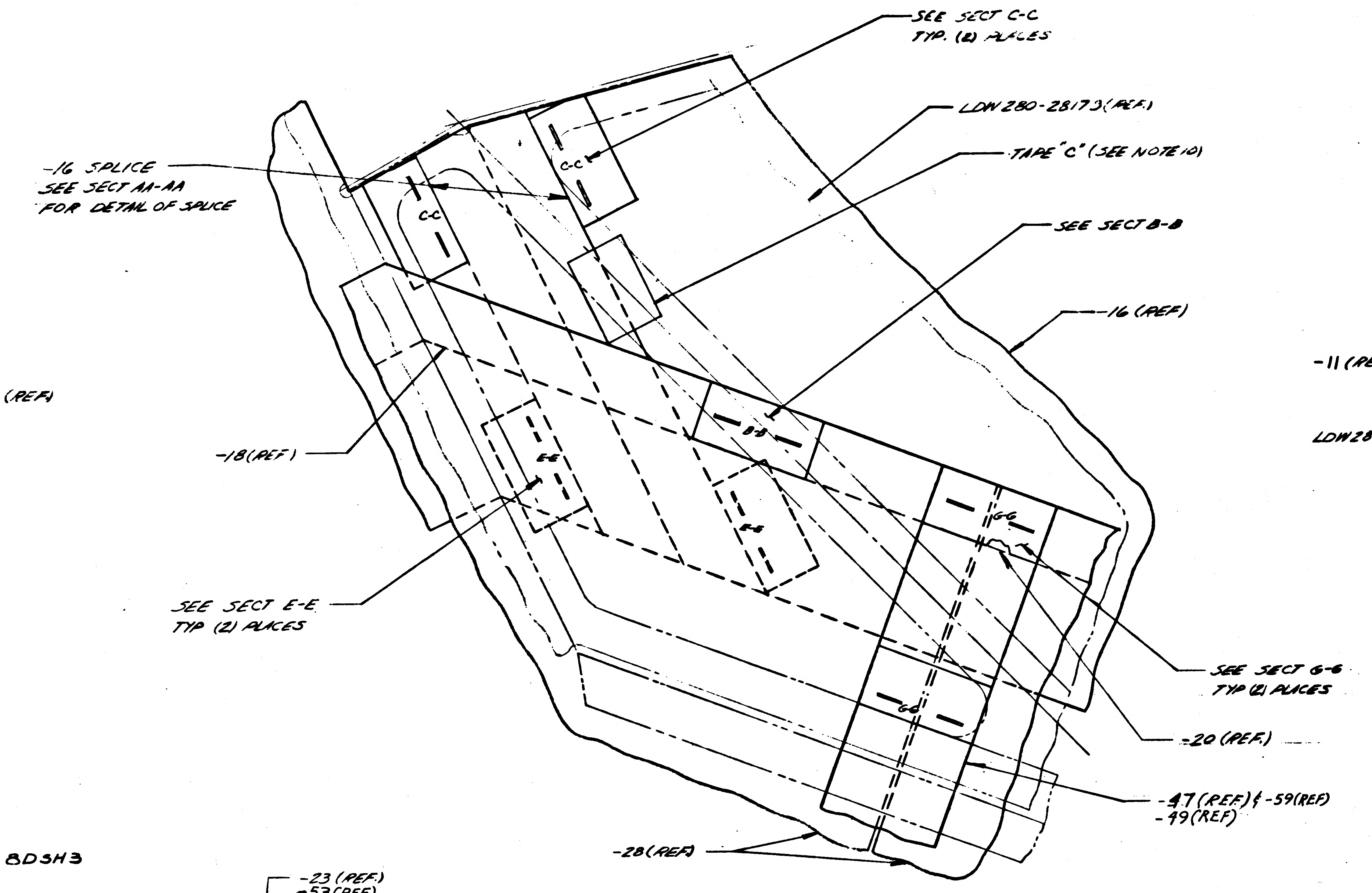
SEE SECT C-C
TYP. (2) PLACES
LDW280-28179(REF.)
TAPE "C" (SEE NOTE 10)
-16 SPLICE
SEE SECT AA-AA
FOR DETAIL OF SPLICE
SEE SECT B-B
-16 (REF.)
-18(REF.)
SEE SECT E-E
TYP (2) PLACES
SEE SECT G-G
TYP (2) PLACES
-20 (REF.)
-47(REF.) & -59(REF)
-49(REF.)
-28(REF)
C-C
B-B
E-E
G-G

VIEW U-U R.H. SIDE ZONE 16A

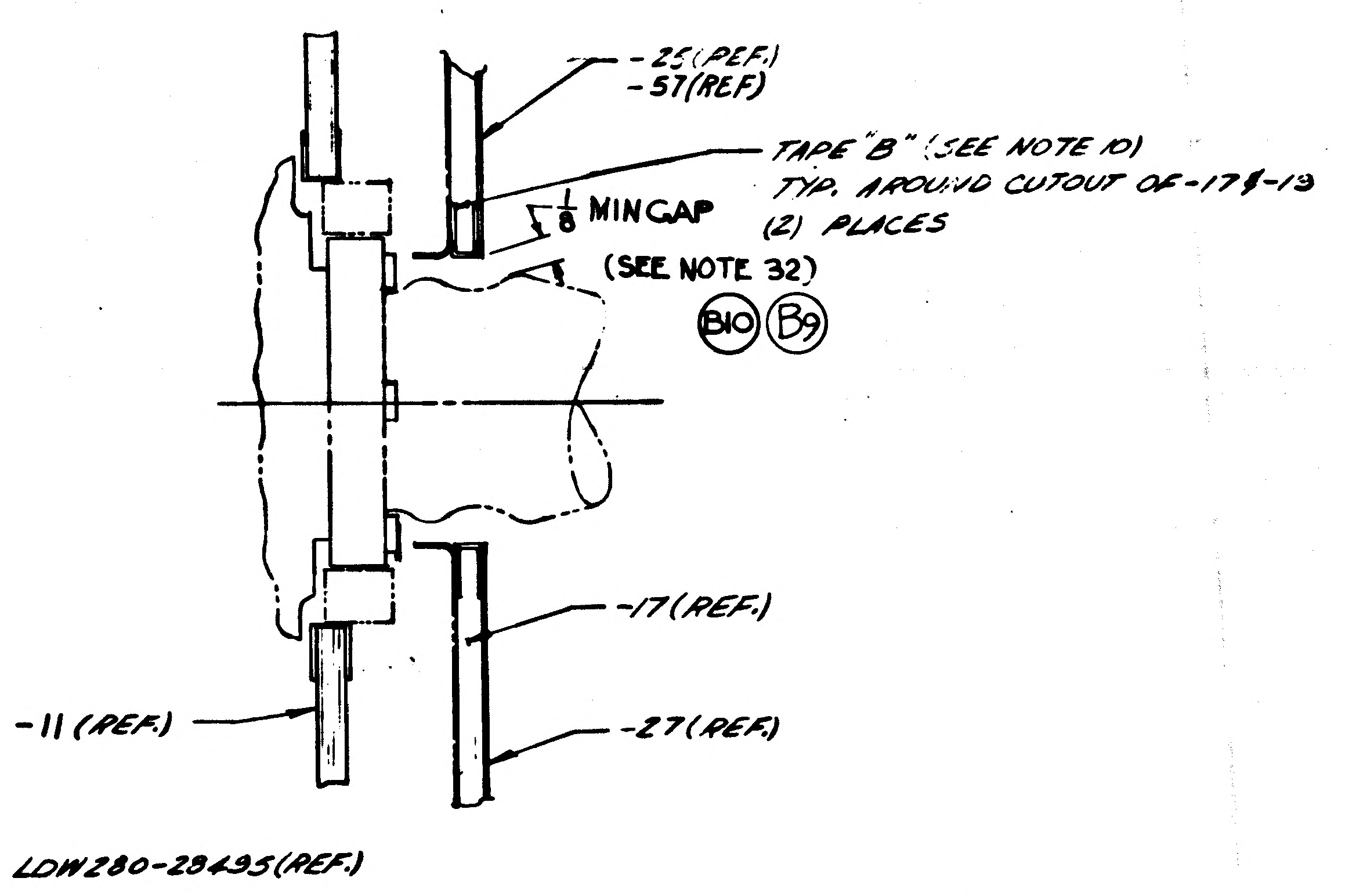
-25(REF.)
-57(REF.)
TAPE "B" (SEE NOTE 10)
TYP. AROUND CUTOUT OF -17 & -19
(2) PLACES
1/8 MINGAP
(SEE NOTE 32)
B10 B9
-17(REF.)
-11 (REF.)
-27(REF.)
LDW280-28495(REF.)

SECTION Z-Z ZONE 7C SH 3

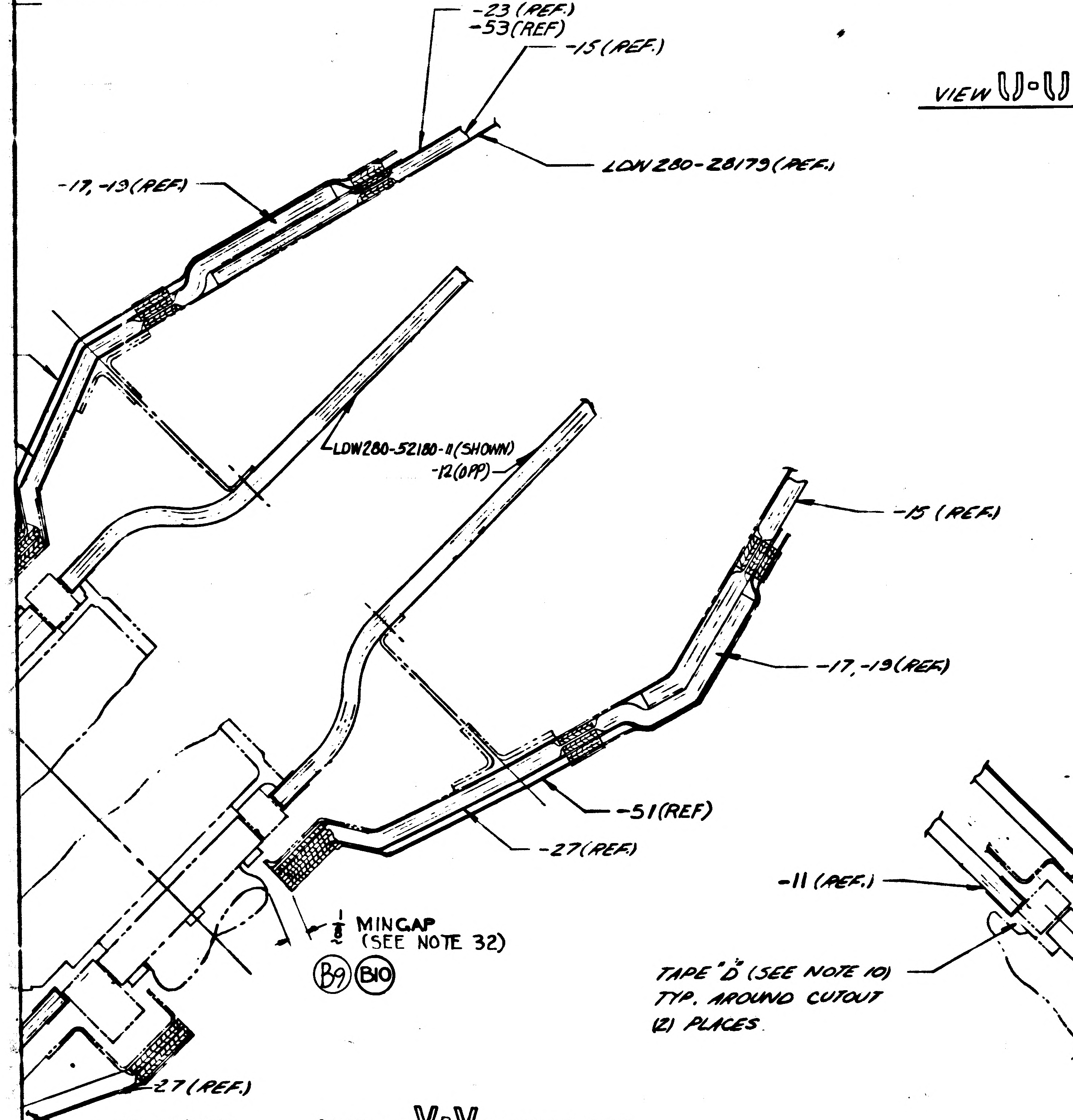
-23 (REF.)
-53(REF.)
-15 (REF.)
LDW280-28179(REF.)
-17, -19(REF.)
LDW280-52180-11(SHOWN)
-12(OPP.)
-15 (REF.)
-17, -19(REF.)
-51(REF.)
-27(REF.)
1/8 MINGAP
(SEE NOTE 32)
B9 B10
-27 (REF.)
-17, -19(REF.)

SECTION V-V ZONE 5A SH 3

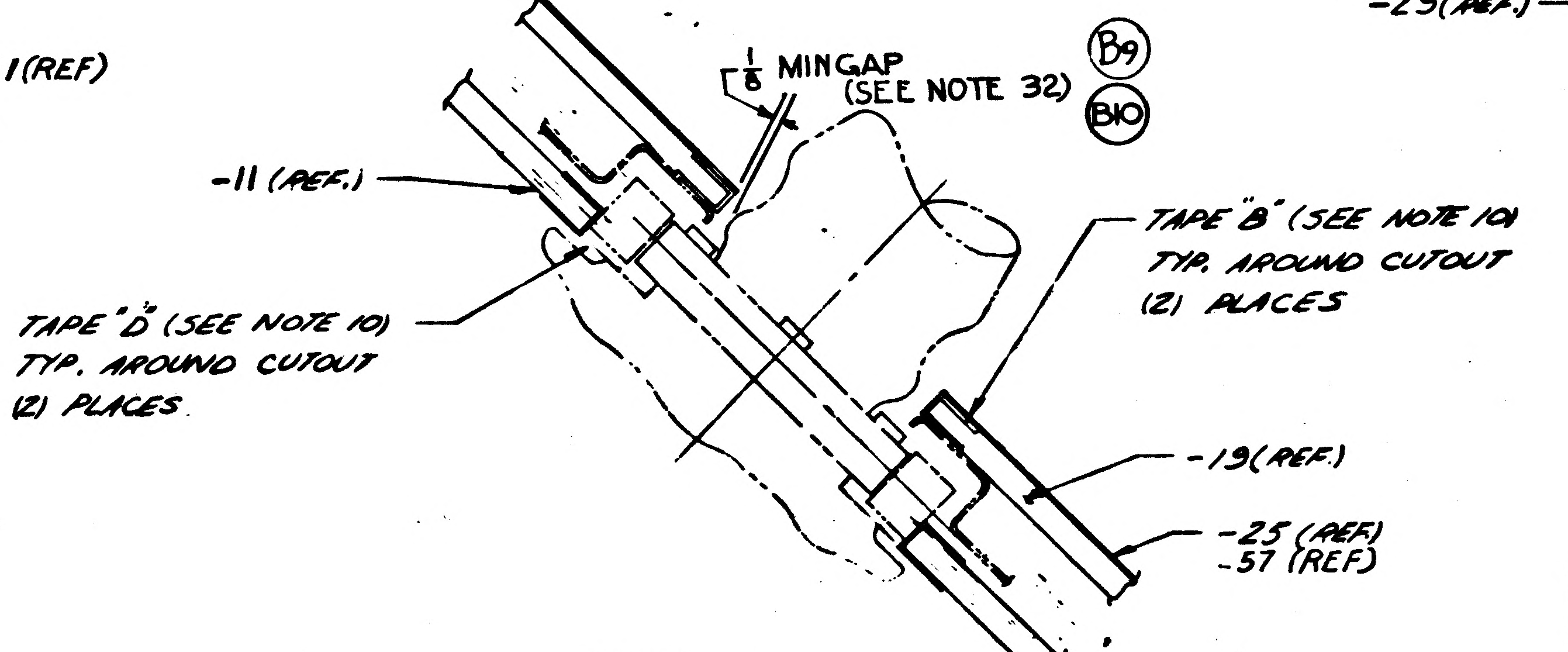
1/8 MINGAP
(SEE NOTE 32)
B9
B10
-11 (REF.)
TAPE "D" (SEE NOTE 10)
TYP. AROUND CUTOUT
(2) PLACES.
TAPE "B" (SEE NOTE 10)
TYP. AROUND CUTOUT
(2) PLACES
-19(REF.)
-25 (REF.)
-57 (REF.)

SECTION Y-Y ZONE 4A SH 3

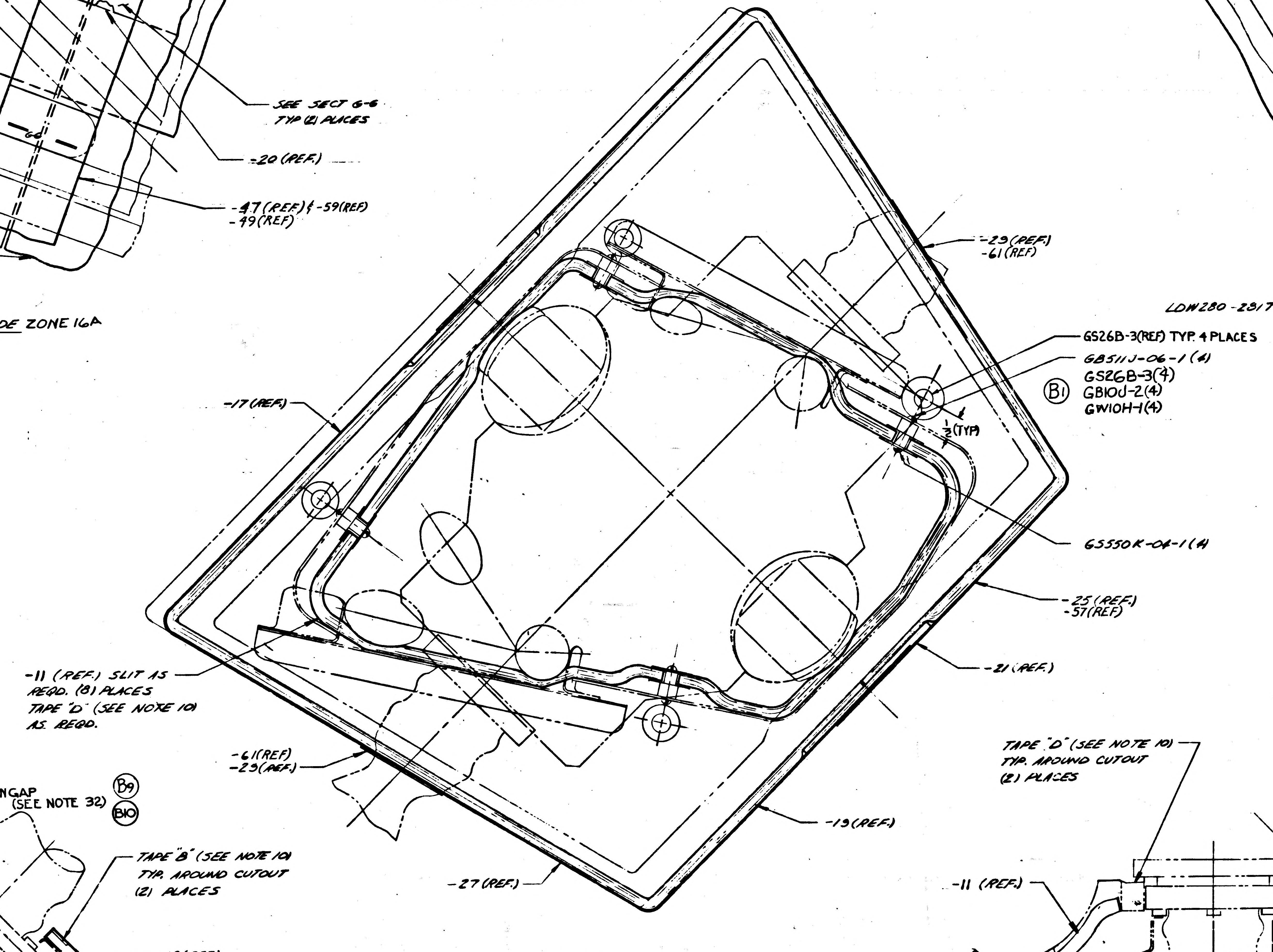
-29(REF.)
-61(REF.)
GS26B-3(REF) TYP. 4 PLACES
GB511J-06-1 (4)
GS26B-3(4)
GB10J-2(4)
GW10H-1(4)
B1
1/2(TYP)
-17(REF.)
GS550K-06-1(4)
-25 (REF.)
-57(REF.)
-11 (REF.) SLIT AS
REQD. (8) PLACES
TAPE "D" (SEE NOTE 10)
AS REQD.
-21 (REF.)
-61(REF.)
-29(REF.)
-19(REF.)
-27 (REF.)

SECTION T-T ZONE 4B SH 3

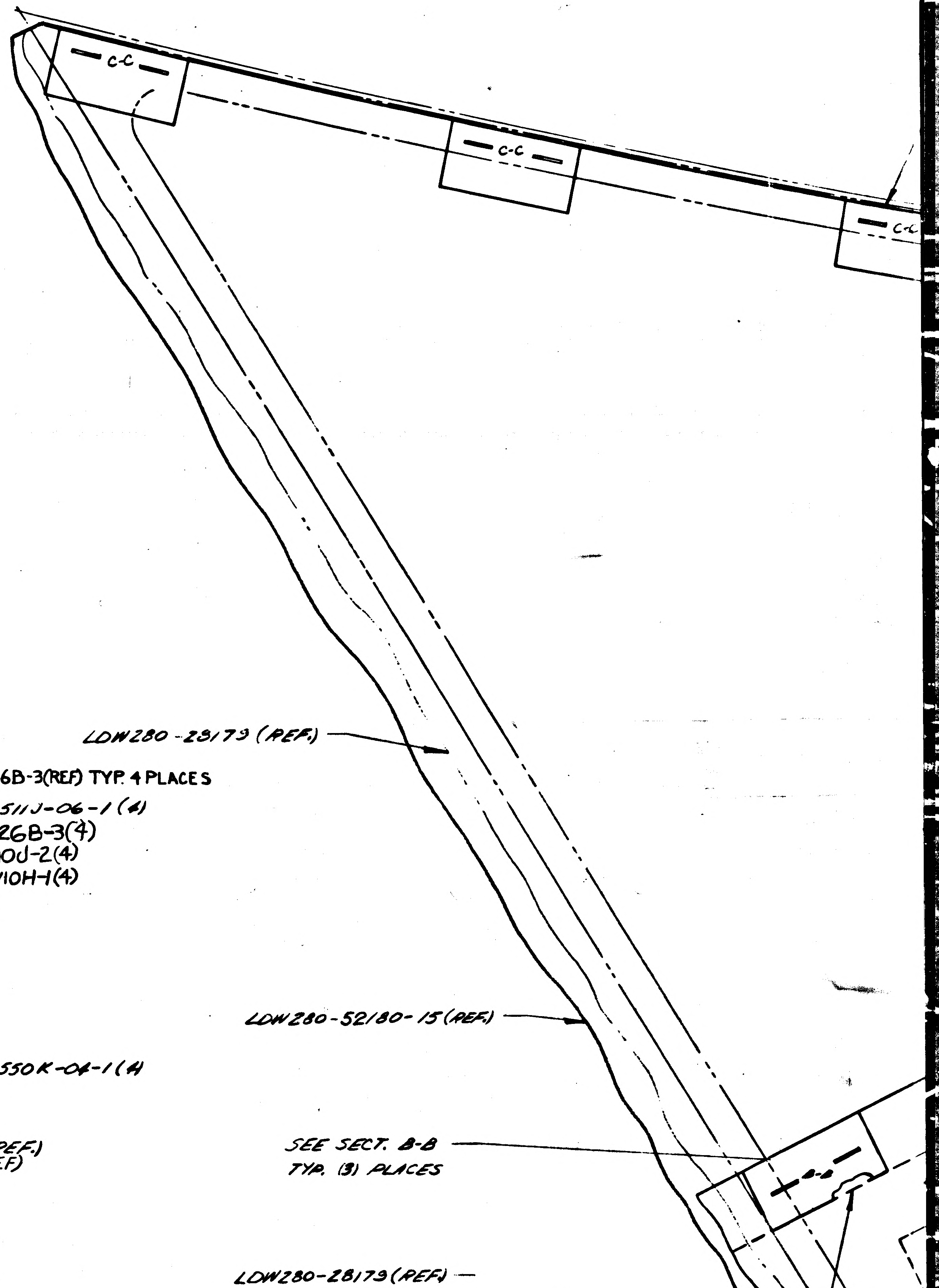
C-C
C-C
C-C
LDW280-28179 (REF.)
LDW280-52180-15(REF.)
SEE SECT. B-B
TYP. (3) PLACES
B-B
LDW280-28179(REF.)

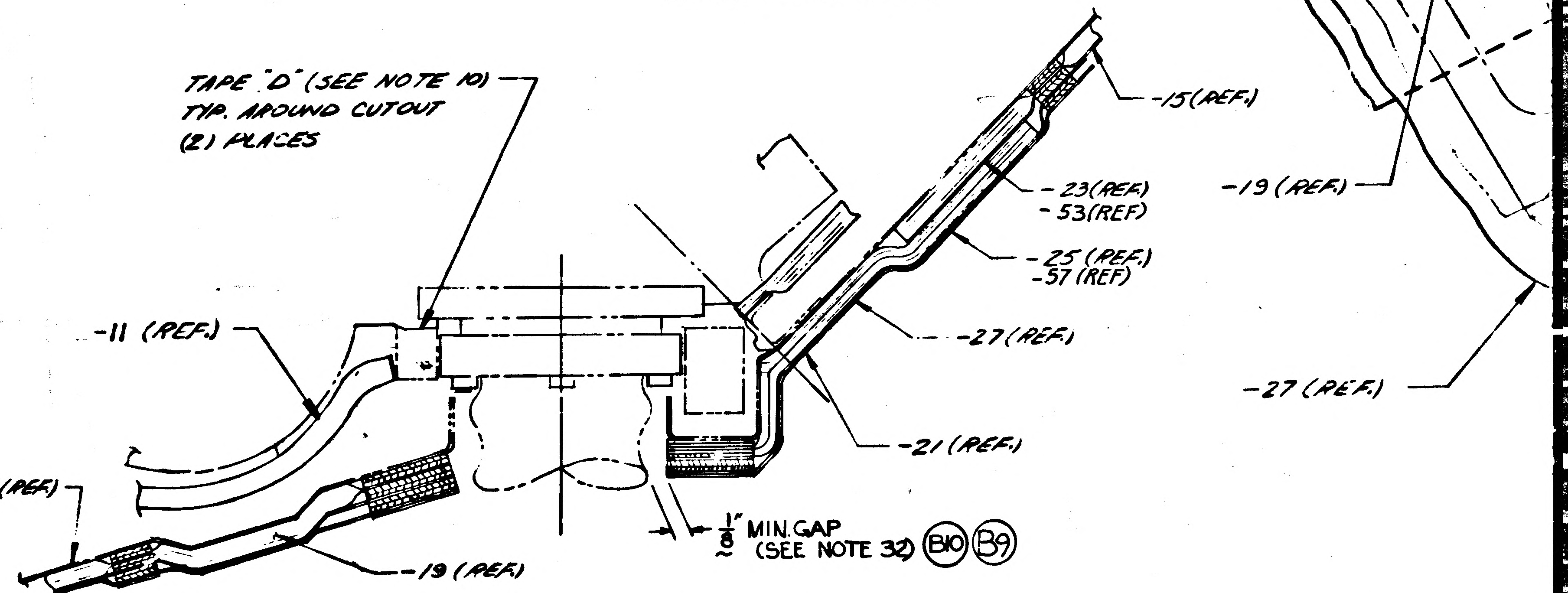
TAPE "D" (SEE NOTE 10)
TYP. AROUND CUTOUT
(2) PLACES
-15(REF.)
-19 (REF.)
-23(REF.)
-53(REF.)
-25 (REF.)
-57 (REF.)
-27 (REF.)
-27 (REF.)
-11 (REF.)
-21 (REF.)
LDW280-28495(REF.)
-19 (REF.)
1/8 MINGAP
(SEE NOTE 32) B10 B9

SECTION W-W
ZONE 3A SH 3

02/03 NAS 9-1100

LDW280-52180 SH 4

LDW280-52180 SH 4

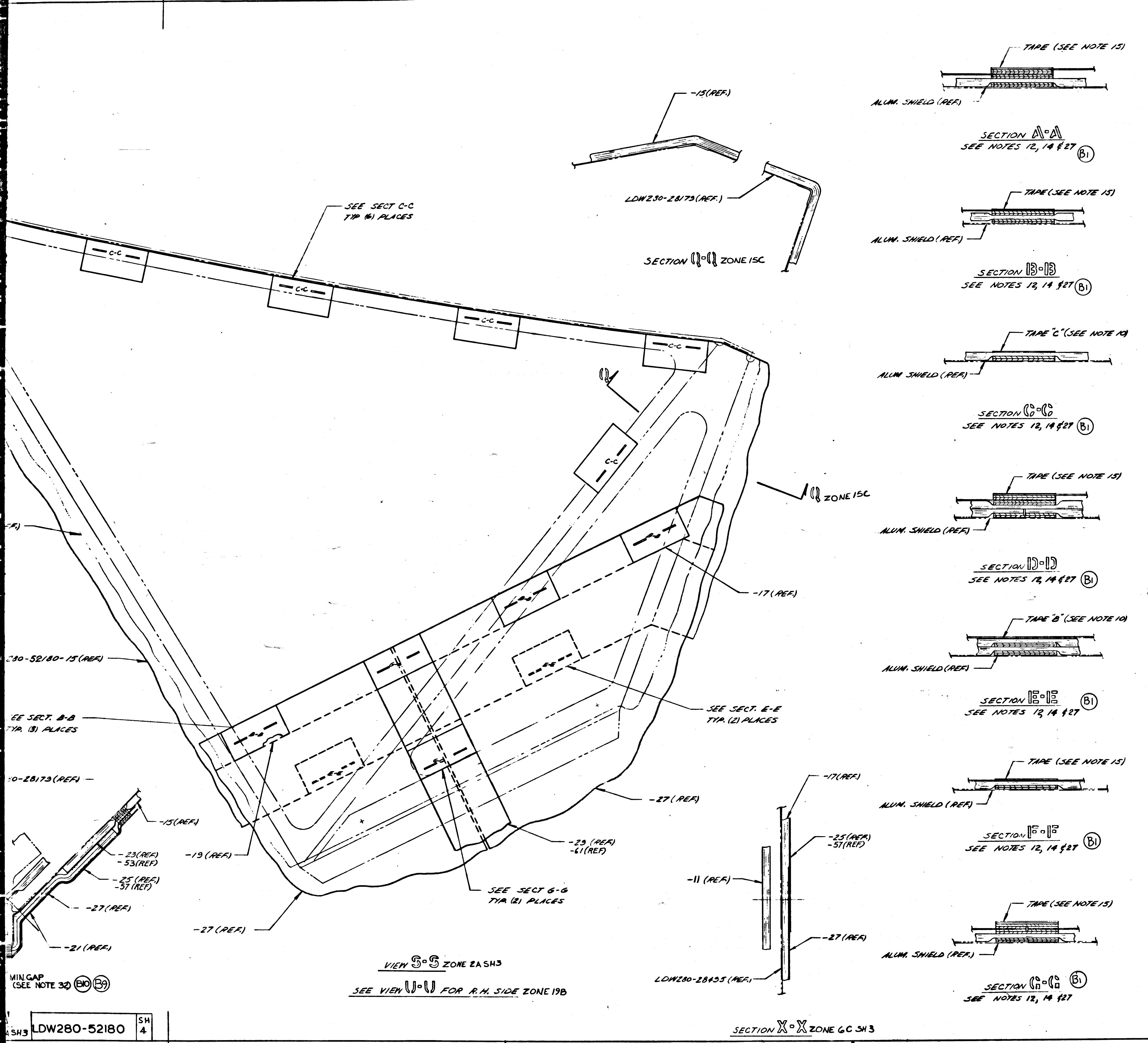
16
15
14
13
-15 (REF.)
LDW280-28179 (REF.)
SECTION Q-Q ZONE 15C
SEE SECT C-C
TYP (6) PLACES
C-C
Q
Q ZONE 15C
B-B
-17 (REF.)
E-E
G-G
ℇ80-52180-15 (REF.)
EE SECT. B-B
TYP. (3) PLACES
SEE SECT. E-E
TYP. (2) PLACES
ℇ0-28179 (REF.)
-15 (REF.)
-23 (REF.)
-53 (REF)
-25 (REF.)
-57 (REF)
-27 (REF.)
-21 (REF.)
-19 (REF.)
-27 (REF.)
-23 (REF.)
-61 (REF)
-27 (REF.)
SEE SECT G-G
TYP. (2) PLACES
MIN. GAP
(SEE NOTE 32) B10 B9
VIEW S-S ZONE 2A SH3
SEE VIEW U-U FOR R.H. SIDE ZONE 19B
A SH3
LDW280-52180
SH 4
-17 (REF.)
-25 (REF.)
-57 (REF)
-11 (REF.)
-27 (REF.)
LDW280-28435 (REF.)
SECTION X-X ZONE 6C SH3
TAPE (SEE NOTE 15)
ALUM. SHIELD (REF.)
SECTION A-A
SEE NOTES 12, 14 & 27 B1
TAPE (SEE NOTE 15)
ALUM. SHIELD (REF.)
SECTION B-B
SEE NOTES 12, 14 & 27 B1
TAPE "C" (SEE NOTE 10)
ALUM. SHIELD (REF.)
SECTION C-C
SEE NOTES 12, 14 & 27 B1
TAPE (SEE NOTE 15)
ALUM. SHIELD (REF.)
SECTION D-D
SEE NOTES 12, 14 & 27 B1
TAPE "B" (SEE NOTE 10)
ALUM. SHIELD (REF.)
SECTION E-E B1
SEE NOTES 12, 14 & 27
TAPE (SEE NOTE 15)
ALUM. SHIELD (REF.)
SECTION F-F B1
SEE NOTES 12, 14 & 27
TAPE (SEE NOTE 15)
ALUM. SHIELD (REF.)
SECTION G-G B1
SEE NOTES 12, 14 & 27
16
15
14

03/03

NAS 9-1100

MANUFACTURING OPERATIONS
UNLESS OTHERWISE SPECIFIED
NOTES CHECKED √ APPLY TO THIS DWG.

PART NUMBER
AND ALL OTHER MARKINGS
IN REGION MARKED ⊠
USE BOTH SIDES IF NECESSARY.

FILLET AND INSIDE CORNER
RADII TOLERANCES
.016R TO .062R ± .010
.063R TO .250R ± .015
OVER .250R ± .030

DEPTH SHOWN FOR TAPPED
HOLES IS FULL THDS. 2-3 IMP THDS.
BEYOND PERMISSIBLE.

EXTERNAL THREAD LENGTH
SHOWN INCLUDES
2 IMPERFECT THREADS MAX.

DO NOT CADMIUM PLATE & PAINT
HOLES OR SURFACES MARKED
WITH DOUBLE ASTERISK.

MISMATCH STEP OF ± .005
PERMISSIBLE DUE TO CHANGE
OF CUTTERS AT INSIDE
INTERSECTING SURFACES.

DIAMETERS MARKED
MUST BE CONCENTRIC WITHIN
FULL INDICATOR
READING

HOLES MUST BE KEPT FREE OF
CHROME PLATING SOLUTION.

ALL DIMENSIONS SHOWN TO BE MET
AFTER CADMIUM PLATING.
THICKNESS OF PLATE .0003 MIN.
TO .0005 MAX. MIN. THICKNESS TO
BE .0002 ON THREADED AREAS.
NO ALLOWANCE FOR PLATING IN
HOLES

125 SURFACE ROUGHNESS
INCLUDING REAMED HOLES
PER MIL-STD-10

250 FOR ALL DRILLED HOLES

REMOVE ALL BURRS.
BREAK ALL EDGES .015-.031

INSPECTION INFORMATION
MINIMUM PERMISSIBLE
AVERAGE EDGE DISTANCE
MARKED IS

SYMBOL √ DENOTES SURFACE
TO BE MACHINED

UNLESS OTHERWISE SPECIFIED
TOLERANCE ON FLANGES IS ± 1/32

LENGTHS OF AN, NAS & MS AL ALY
RIVETS SHORTER THAN 1 INCH ARE
NOT SPECIFIED.

TOLERANCE ON LOFTED
DELINEATIONS IS

DWG SIZE 34 X 152

PRINTING INFO ONLY
FULL SIZE SHEET AREA (36 X154)= 38.5 SQ. FT.
1/2 SIZE SHEET AREA (1/4 OF FULL)= 9.375 SQ. FT.

PRINT TRIM LINE

D
C
B
A

LDW280-52180 B

LDW280-52180 B

GRUMMAN AIRCRAFT ENGRG CORP., BETHPAGE, L. I., NEW YORK

LM MODEL OR END ITEM	SIZE J	CODE IDENT NO. 26512	LDW280-52180	B
	SCALE FULL		SHEET 4 OO	

(B)

13

3FR

B

ENG 32.1 REV 3-65

GRUMMAN AIRCRAFT ENGINEERING CORP.
CODE IDENT NO. 26512
ENGINEERING ORDER EMFA.

DWG. NO.	LDW 280-52180	EO NO.	A2
CONTROL INFO NO.	LM5-12541		

ON -1 AND -2 RELOCATE CLIP LDW280-11294-15, STANDOFF, ETC AND ASSOC HWD 1" FROM ORIGINAL POSITION AS SHOWN

* FOR DESIGN REF ONLY
NOTE 17 SAYS TO SCALE
FOR DIMENSIONS NOT SHOWN

RELEASED BY LIAISON

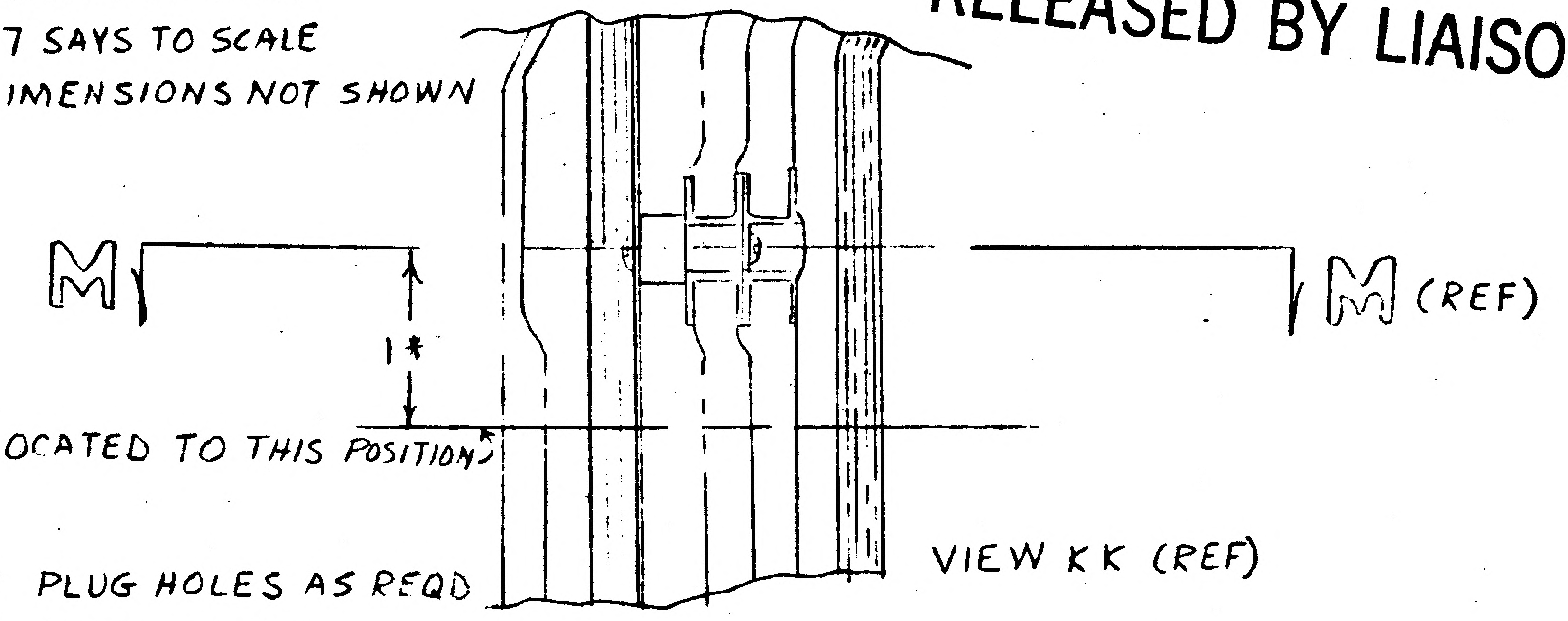

REWORK PLUG HOLES AS REQD
MS 20470 AD3

DETAIL SPEC REQ		CL II ENGRG CHG		CL I ENGRG CHG		5

REASON FOR EO	DESCRIPTION OF EO	GAEC EO RELEASE
CLIP ETC INTERFERES WITH ANCHOR NOT LOCATION ON LDW 280-28179	ON-1 ES-2 IN SECT M-M RELOCATED LDW 280-11294-15 AND ASSOC HARDWARE.	② C JK 31 05 035

MODEL	PROCURING ACTIVITY NO.	GAEC UNIT NO.	SUB CONTR UNIT NO.
LM		LM-2(32) THRU	
		LM-15(45)	

DRAWING CHANGE REQD		DISPOSITION OF PARTS										
✓		✓		APPROVED BY	JDL			—	JJJ	CH	RMC ⓦ	
				DATE	4-11-67			—	3-7-67	3-7-67	3-10-67	3-7-67
REVISE DWG	RECORD EO	REWORK	SCRAP	1	VDI.	SUPPORT	RELIAB. GROUP	GROUP LEADER	STRESS GROUP	LIAISON ENGRG	PROJ ENGRG	~~GOVT~~

PRIORITY	DRAWING TITLE	DRAWING NO.	EO NO.
C	BLANKET (INSTALLATION) AS-CABIN RCS SHIELD - FWD	LDW280-52180	A2

ISSUED BY LIAISON J. GRASSIANO X6216 SECTION VDI GROUP NO. 280 PL 35

01 NAS 9-1100

B

ENG 32.1 REV 3-60

GRUMMAN AIRCRAFT ENGINEERING CORP.
CODE IDENT NO. 26512
ENGINEERING ORDER

EMF-A

DWG. NO. LDW280-52180
EO NO. A3
CONTROL INFO NO. LM5-11942

ADD NOTE "*" ~
"STAND-OFFS MAY BE
LOCATED WITHIN
1½ INCHES OF
POSITION SHOWN".
(* USE NEXT AVAILABLE NUMBER)

ON-1 & -2 INSTL
IN F/D "VIEW K-K" (SHT 3)
& IN B/M REMOVE
(2) GB 511J-06-1, (2) GS26B-1,
(2) GB 10J-2, (2) GB 10J-1,
(2) GW10H-1 & (2) GS 550K-04-1
& REVISE PICTURE AS SHOWN
C/O "TYP 9 PLACES"
(WAS) "TYP 11 PLACES".

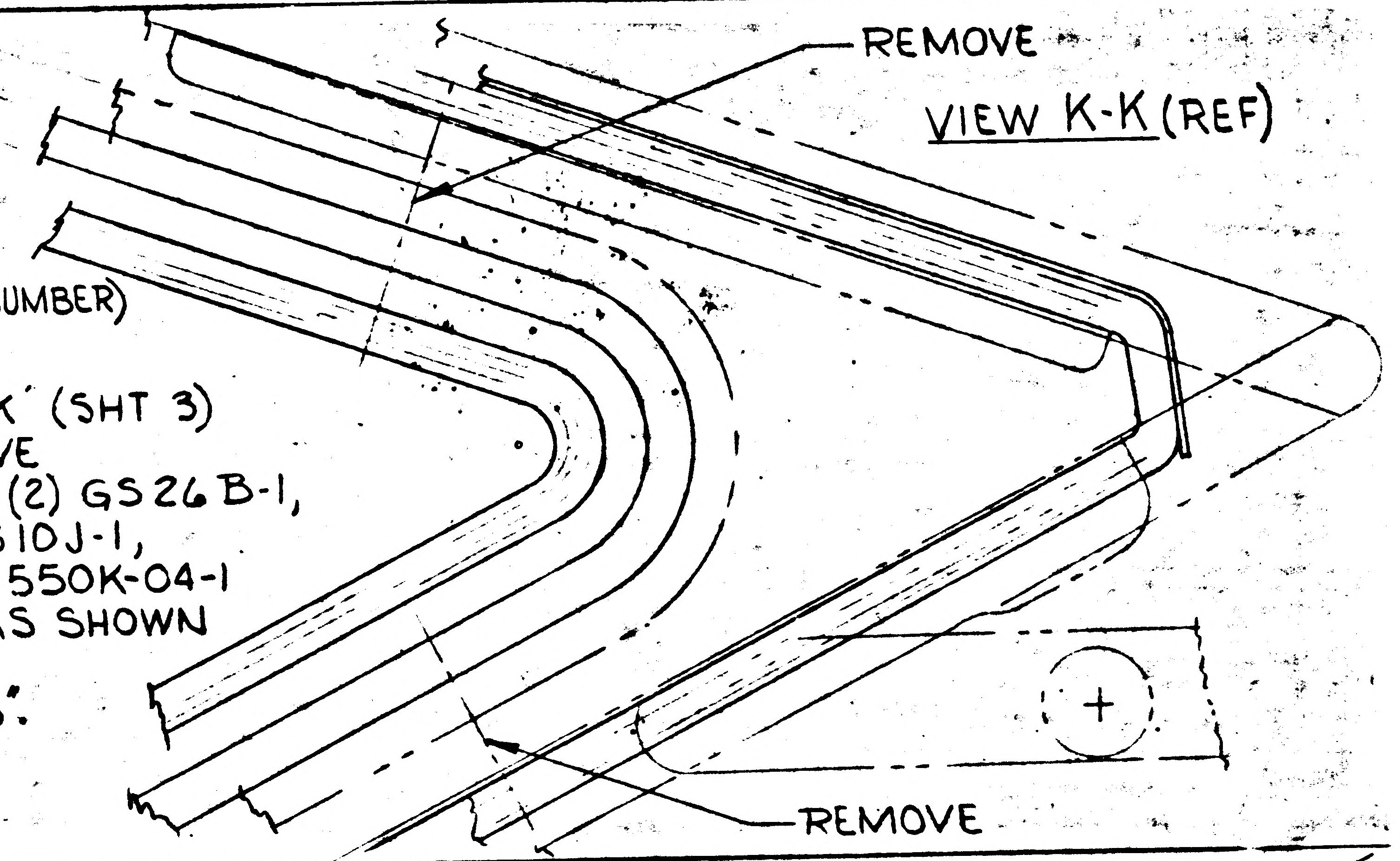

DETAIL SPEC REQ		CL II ENGRG CHG		CL I ENGRG CHG	

REASON FOR EO	DESCRIPTION OF EO	GAEC C EO RELEASE
TO FACILITATE INSTALLATION OF THERMAL SHIELD & BLANKET	ADDED NOTE * ~ ON-1 & -2 REMOVED 2 EACH: GB511J-06-1, GS26B-1, GB10J-2, GB10J-1, GW10H-1 & GS 550K-04-1.	VK

MODEL	PROCURING ACTIVITY NO.	GAEC UNIT NO.	SUB CONTR UNIT NO.
LM		LM-2 (32)	
		THRU	
LM		LM-15 (45)	

DRAWING CHANGE REQD: REVISE DWG	RECORD EO	DISPOSITION OF PARTS: REWORK	SCRAP
✓		✓	✓

		SUPPORT	RELIAB. GROUP	GROUP LEADER	STRESS GROUP	LIAISON ENGRG	PROJ ENGRG	GOVT
APPROVED BY	WT			~		CH	RMC (E)	
DATE	3/3/67			~	3-7-67	3-4-67	3-10-67	3-7-67
1	VDI							

PRIORITY: C
DRAWING TITLE: BLANKET INSTL~A/S~CABIN RCS SHIELD~FWD
DRAWING NO.: LDW280-52180
EO NO.: A3

ISSUED BY D. KLINGENER X1392 SECTION VDI GROUP NO. 335 5

5

01

NAS 9-1100

B *

ENG 32.2 REV 3-65

GRUMMAN AIRCRAFT ENGINEERING CORP.
CODE IDENT NO. 26512
ENGINEERING ORDER CAT. D

DWG. NO. LDW280-52180		EO NO. B1
CONTROL INFO NO. LDW280A-5665		

1. DELETE NOTE 13(SHT. 3.0) & ADD NOTE * AS FOLLOWS; "BOND GT535L-HA0020 & GT535L-LA0020 VELCRO ZIPPER (HOOK OR PILE) TO SHIELD WITH RTV 731 PER LSP 14-22601A TYPE II CLASS I (SEE SECT. A-A THRU SECT G-G FOR APPLICATION)."

2. ON-1 & -2 INSTAL; IN SECT T-T (SHT. 4.0) & M/B GS26B-1 S/B GS26B-3. ROTATE GS26B-3 STANDOFF 90° AS SHOWN BELOW - TYP. (4) PLACES.

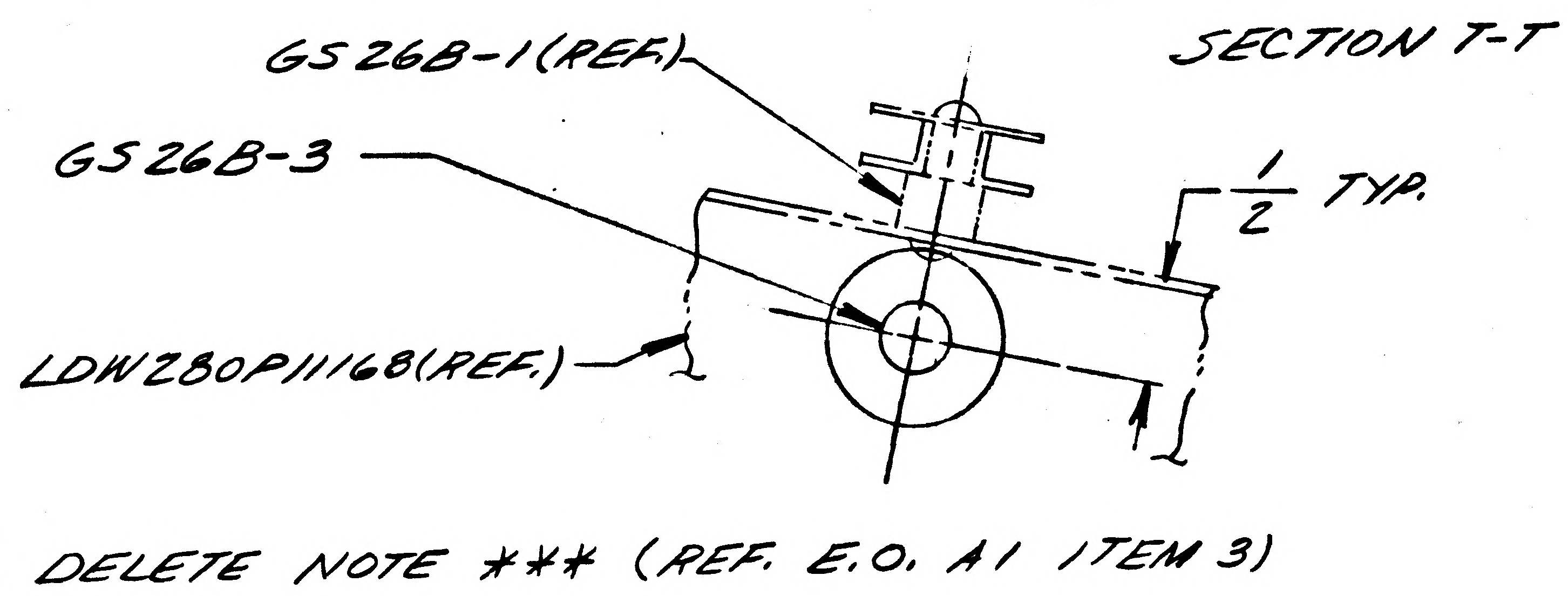

SECTION T-T

3. DELETE NOTE *** (REF. E.O. A1 ITEM 3)

4. ADD NOTE ** AS FOLLOWS & REVISE M/B AS REQD.
"ATTACH LDW280-52180-15 TO -23 CREATING -3 ASSY AND ATTACH -16 TO -31 CREATING -5 ASSY. USING GS577A-1 STAPLES 1/2 ±1/4 FROM EDGE AT 2 ± 1/2 INCH SPACING (SEE NOTE 3). APPLY LDW280P10871-11 TAPE AROUND ALL EDGES OF -23, -31 - 3 & -5"

5. ADD THE FOLLOWING TO NOTE * (REF. E.O. A1 ITEM 1) "APPLY LDW280P10871-11 TAPE AROUND ALL EDGES OF -25, -26, -27, -28, & -29 BLANKET ASSY. SEE DETAIL AH-AH FOR WELD DETAIL."

6. ADD DETAIL AH-AH AS FOLLOWS:

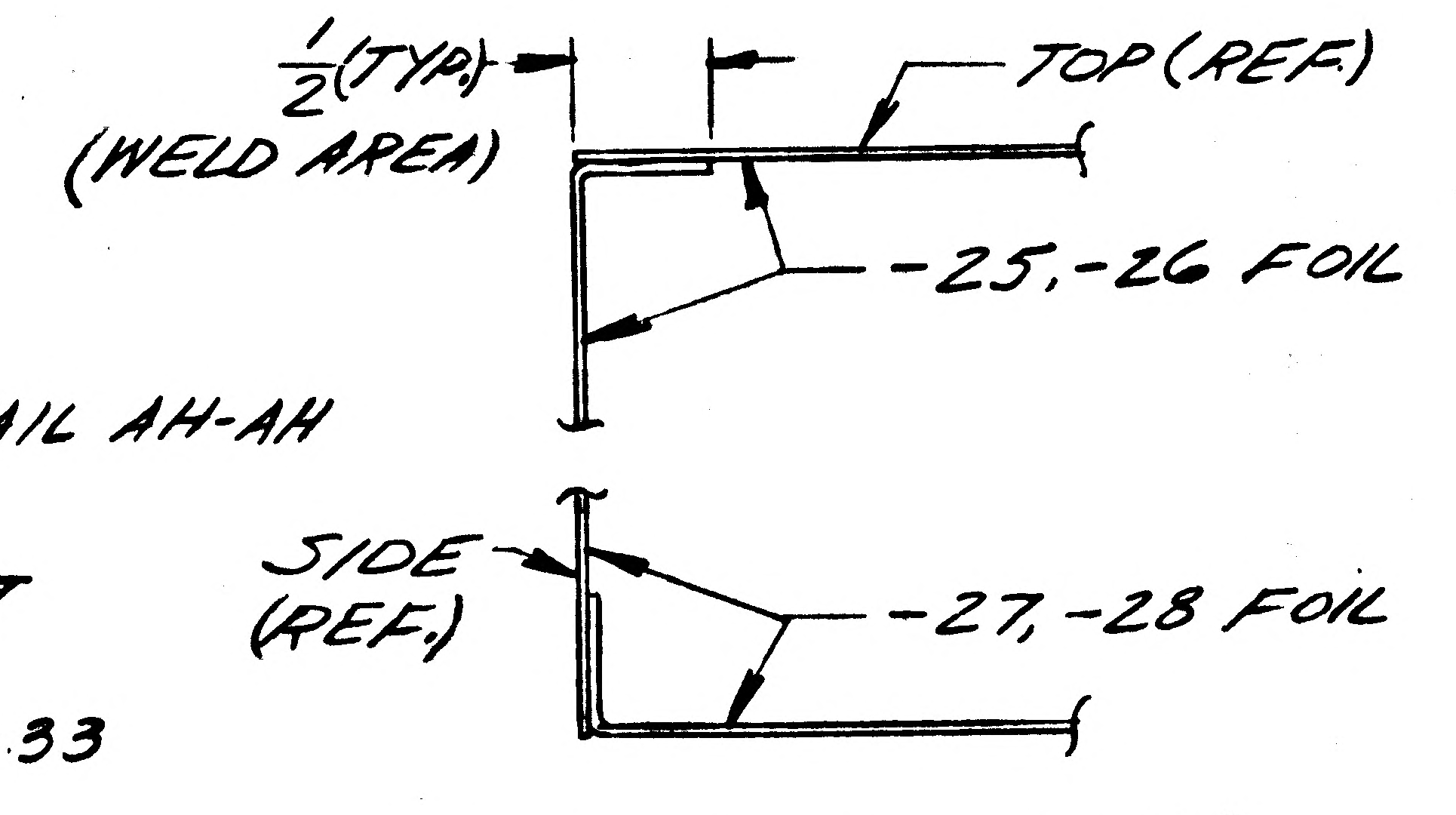

DETAIL AH-AH

7. IN M/B & F/D ADD -3 & -5 BLANKET ASSY AS NOTED IN 4. IN F/D & B/M DELETE -33

8. IN NOTE Δ (REF. E.O. A1 ITEM 5) 1/2 IN. S/B 3/4

9. ADD NOTE *** AS FOLLOWS; "LDW280P10871-11 TAPE SHALL BE APPLIED AROUND ALL EDGES OF BLANKETS HAVING (1) LAYER OF LDW280P17589-15."

LCD # 19-1106

*, **, *** USE NEXT APPLICABLE NO.

THIS IS A REVISION OF E.O. A1

DETAIL SPEC REQ | \ | CL II ENGRG CHG ✓ | CL I ENGRG CHG

REASON FOR EO
(2) EASE ACCESSIBILITY (3,4,7) ADDED ASSY. NO'S (1,5,6,8,9) DESIGN CHGS.

DESCRIPTION OF EO
ON-1 & -2 INSTL. IN SECT T-T & M/B, GS26B-3 WAS GS26B-1, RELOCATED GS26B-3 - TYP. (4) PLS - ADDED NOTES *, **, *** ADDED DETAIL AH-AH - IN NOTE * (E.O. A1) ADDED "LDW280P10871-11 TAPE AROUND EDGES OF -25, -26, -27-28, -29, SEE DETAIL AH-AH FOR WELD DETAIL." - IN NOTE (5) REF EO A1 Δ (REF. E.O. A1) 3/4 WAS 1/2 - DELETED NOTE *** (E.O. A1) DELETED NOTE 13 (SHT. 3). IN F/D & M/B ADDED -3 & -5 ASSY. - IN F/D & B/M DELETED -33

MODEL	PROCURING ACTIVITY NO.	GAEC UNIT NO.	SUB CONTR UNIT NO.
	EFFECTIVITY LCD 19-1106		
LM	LM-2(32)	THRU LM-	15(45)

DRAWING CHANGE REQD		DISPOSITION OF PARTS	
REVISE DWG	RECORD EO	REWORK	SCRAP
✓		✓	

		SUPPORT	RELIAB. GROUP	GROUP LEADER	STRESS GROUP	LIAISON ENGRG	PROJ ENGRG	GOVT
APPROVED BY	JaP			RP			Dam	
DATE	2/27/67			2/21/67	2/28		3/17/67	2/1/67
#1	VD1							

GAEC EO RELEASE: CE 3/18/7

PRIORITY: C
DRAWING TITLE: BLANKET (INSTALL.) A/S - RCS SHIELD -
DRAWING NO.: LDW280-52180
EO NO.: B1

ISSUED BY F. CURASI X1153 2-20-67 SECTION VEH. DES. INT. GROUP NO. 335 PL 35

01 NAS 9-1100

ENG 32.1 REV 3-65

GRUMMAN AIRCRAFT ENGINEERING CORP.
CODE IDENT NO. 26512

ENGINEERING ORDER

DWG NO. LDW280-52180
EO NO. B2
CONTROL INFO NO. LM5-13482

REVISED DESCRIPTION OF INCORPORATION OF A5 DRAWING CHANGE AS FOLLOWS:

DELETED -29, -23 & -31 FROM NOTE #25
ON -1 BLANKET INSTL. ADDED -45 BLANKET AND ON
ON-3 BLANKET INSTL. ADDED -46 BLANKET.

(WAS DELETED -29 -23 & -31 FROM NOTE #25)

RELEASED BY LIAISON

DETAIL SPEC REQ		CL II ENGRG CHG	X	CL I ENGRG CHG		5

REASON FOR EO	DESCRIPTION OF EO	GAEC EO RELEASE	C
DESCRIPTION OF DRAWING CHANGE WRITTEN INCORRECTLY.	AS NOTED ABOVE	JK	—

MODEL	EFFECTIVITY		
	PROCURING ACTIVITY NO.	GAEC UNIT NO.	SUB CONTR UNIT NO.
LM	NOT		
		REQD	

DRAWING CHANGE REQD		DISPOSITION OF PARTS		APPROVED BY	WT			~		EWB	Sam	JRP
✓		NOT REQD.		DATE	6/3/67			~		6/3/67	6/6/67	6/3/67
REVISE DWG	RECORD EO	REWORK	SCRAP	1	VD1	SUPPORT	RELIAB. GROUP	GROUP LEADER	STRESS GROUP	LIAISON ENGRG	PROJ ENGRG	~~GOVT~~

PRIORITY	DRAWING TITLE	DRAWING NO.	EO NO.
E	BLANKET INSTL ASCENT STAGE CABIN RCS SHIELD FWD	LDW280-52180	B2

ISSUED BY P.KEISER X84709 6/3/67 SECTION VD1 GROUP NO. 335 PL 5

01

NAS 9-1100

C

ENG 32.1 REV 3-65

GRUMMAN AIRCRAFT ENGINEERING CORP.
CODE IDENT NO. 26512
ENGINEERING ORDER

DWG. NO. LEO 280 | EO NO. 619
CONTROL INFO NO. LM-3-5183

DRAWING NO.	CHG	DESCRIPTION OF CORRECTION	EFFECT.
✓LDW 280-11383	A6	FOR -29 & -31 ADD LM-3 THRU LM-15 SAME QUANT. & N/A	LM-3 (33) THRU LM-15 (45)
✓LDW 280-53186	C2	ON INCORP. OF E.O. A8 REMOVE LDW 280-10743-17 (2) FROM -1 ASSY WAS FROM -7 ASSY.	LM-3 (33) THRU LM-15 (45)
✓LDW 280-23075	F8	ON INCORP. OF E.O. F7 -3 ASSY WAS -1 ASSY	LTA-3 (13)
✓LDW 280-52180	B3	ON INCORP. OF E.O. B2 -2 INSTL. WAS -3 INSTL.	NOT REQD
LDW 280-28018	J4	IN FIELD & B/M -1 WAS -5	LM-2 (32)

DETAIL SPEC REQ ☐ CL II ENGRG CHG ☑ CL I ENGRG CHG ☐ 3

REASON FOR EO: PROVIDE MULTIPLE DRAWING CORRECTIONS.

DESCRIPTION OF EO: NOTED

GAEC EO RELEASE: JK C

MODEL	PROCURING ACTIVITY NO.	GAEC UNIT NO.	SUB CONTR UNIT NO.
LM		NOTED	

DRAWING CHANGE REQD: REVISE DWG ✓ RECORD EO

DISPOSITION OF PARTS: NOT REQD (REWORK / SCRAP)

APPROVED BY — DATE 7/6/67 — 6 — SUPPORT — RELIAB. GROUP — GROUP LEADER — STRESS GROUP — LIAISON 6-6-67 — 6-20 — PROJ ENGRG 6/7/67

PRIORITY C

DRAWING TITLE: SEE DRAWING

DRA[illegible] 280 EO NO. 619

ISSUED BY LIAISON VIC BOLLO X2151 SECTION VDI GROUP NO. 335 PL 25

01

NAS 9-1100

RELEASED BY LIAISON

DWG 22.1 REV 3-65

GRUMMAN AIRCRAFT ENGINEERING CORP.
CODE IDENT NO. 26512
ENGINEERING ORDER

DWG. NO. LDW280-52180 | EO NO. B4
CONTROL INFO NO. LM5- 15299

ON-1 & -2 F/D RELOCATE STANDOFF LDW280-28377-1, BUSHING ETC, AND ASSOC HWD 1" FROM ORIGINAL POSITION AS SHOWN.

*FOR DESIGN REF ONLY
NOTE 17 SAYS TO
SCALE FOR DIMENSIONS
NOT SHOWN

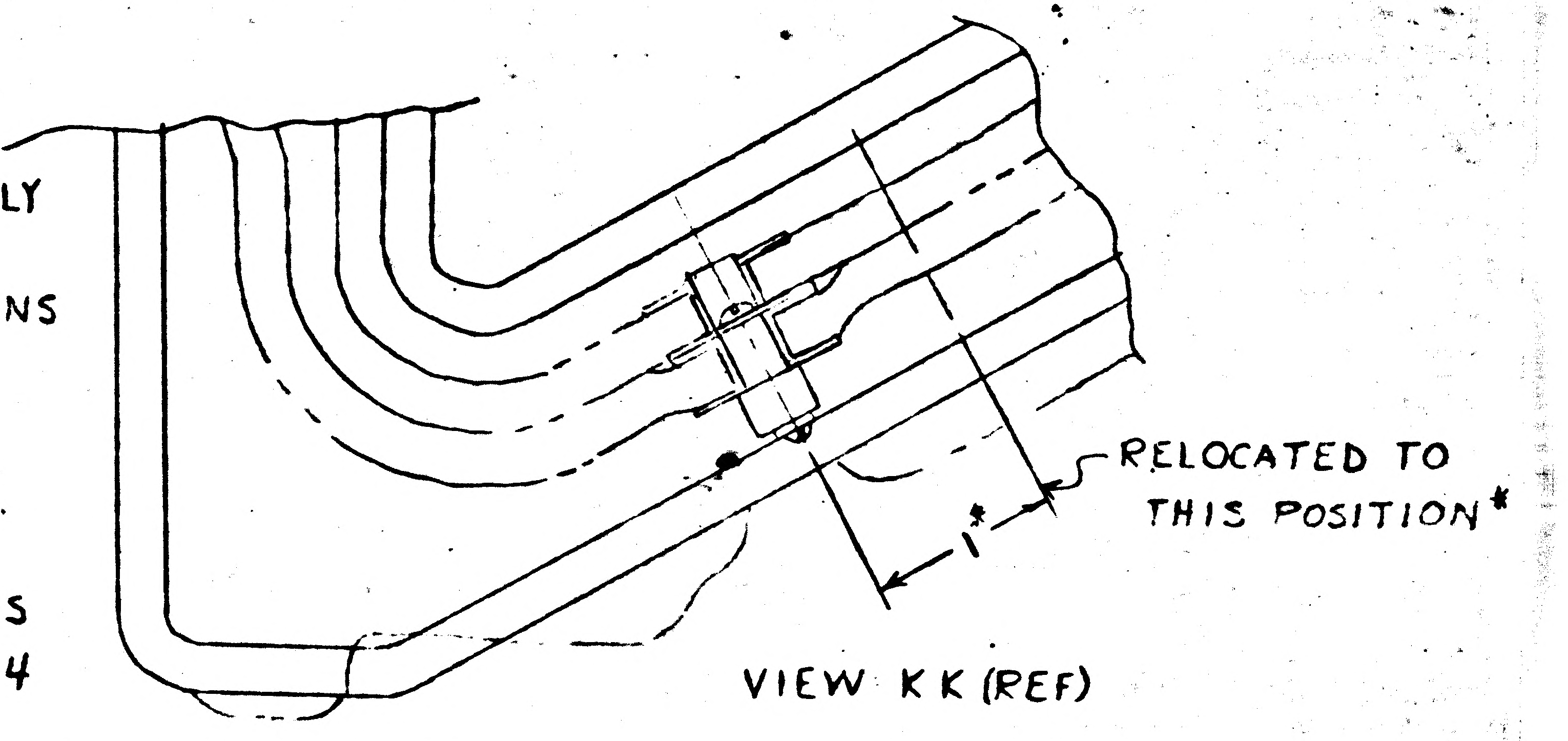

REWORK PLUG HOLES
AS REQD MS20470A4
IF HOLES ARE IN BLANKETS
REPAIR PER LPC 280-6

DETAIL SPEC REQ ☐ CL II ENGRG CHG ☑ CL I ENGRG CHG ☐

5

REASON FOR EO	DESCRIPTION OF EO	GAEC EO RELEASE
STANDOFF ETC INTERFERES WITH THRUSTER STRUT.	ON-1 & -2 IN VIEW KK RELOCATED (1) LDW 280-28377-1 AND ASSOC HWD.	C

MODEL	PROCURING ACTIVITY NO.	GAEC UNIT NO.	SUB CONTR UNIT NO.
LM		LM-2(32)	
		THRU	
		LM-15(45)	

DRAWING CHANGE REQD: REVISE DWG	DRAWING CHANGE REQD: RECORD EO	DISPOSITION OF PARTS: REWORK	DISPOSITION OF PARTS: SCRAP
✓		✓	

	VDI	SUPPORT	RELIAB GROUP	GROUP LEADER	STRESS GROUP	LIAISON ENGRG	PROJ ENGRG	
APPROVED BY				~				
DATE	7/24/67			~	6/8/67	6/8/67	7/24/67	6/12/67
	1							

PRIORITY: C
DRAWING TITLE: BLANKET (INSTALLATION) A/S CABIN RCS SHIELD - FWD
DRAWING NO. LDW280-52180
EO NO. B4

ISSUED BY LIAISON J. GRASSIANO X6216 SECTION VDI GROUP NO. 280 PL 25

RELEASED BY LIAISON

ENG 32.1 REV 3-65

GRUMMAN AIRCRAFT ENGINEERING CORP.
CODE IDENT NO. 26512
ENGINEERING ORDER

DWG. NO. LDW280-52180
EO NO. B5
CONTROL INFO NO. LM5-13519

IN F10 & B/M

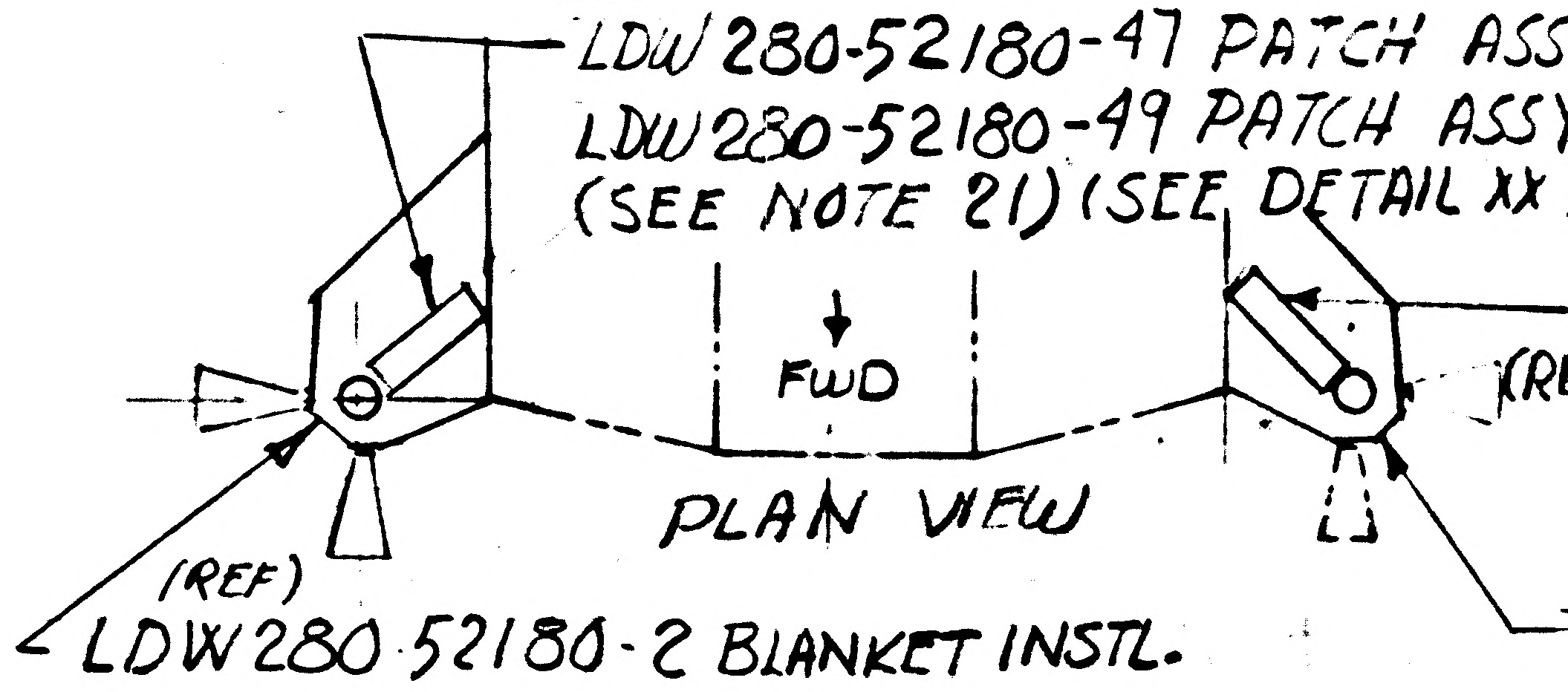

ADD
LDW 280-52180-47 PATCH ASSY (TOP) (WAS -29)
LDW 280-52180-49 PATCH ASSY (BOTTOM) (WAS -29)
(SEE NOTE 21) (SEE DETAIL XX)

(ADD)
LDW 280-52180 -51 PATCH ASSY (BOTTOM) (WAS -29)
(REF) LDW 280-52180 -29 PATCH ASSY. (TOP)
(SEE NOTE 21) (SEE DETAIL XX)

(REF)
LDW 280-52180-2 BLANKET INSTL.

(REF)
LDW 280-52180-1 BLANKET INSTL.

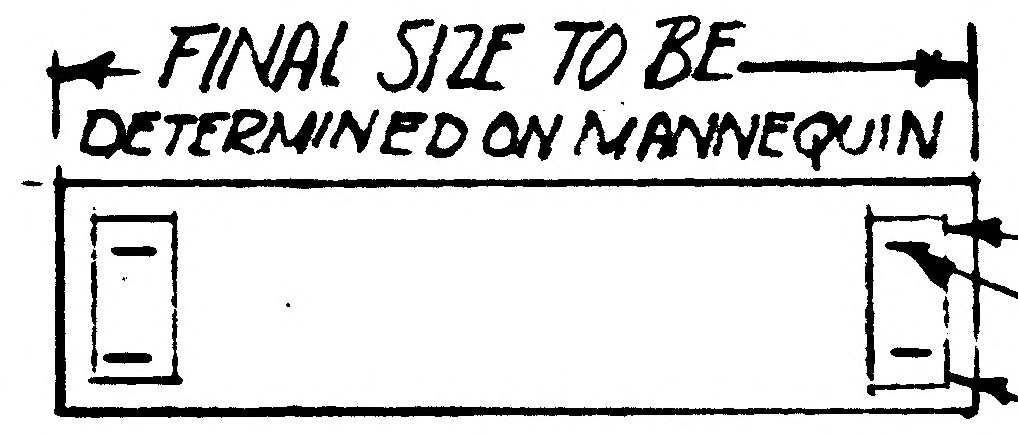

STAPLE GT535L-HA0020 HOOK (2) (FAR SIDE)
GS577A-2 STAPLE (4)
LDW280-52180-35 TAPE (2) (NEAR SIDE) SEE NOTE 15)

DETAIL XX (TYP. FOR -47, -49 & -51)

XX = NEXT AVAIL DETAIL LETTER

DETAIL SPEC REQ ☐ CL II ENGRG CHG ☑ CL I ENGRG CHG ☐

5

REASON FOR EO: THESE PATCHES ARE NEEDED TO COMPLETE -1 & -2 INSTL

DESCRIPTION OF EO: ON -1 INSTL ADDED -51 PATCH ASSY & ON -2 INSTL. ADDED -47 & -49 PATCH ASSY. ADDED DETAIL XX FOR -29, 1 REQD. WAS 4

GAEC EO RELEASE: C JK —

MODEL	PROCURING ACTIVITY NO.	GAEC UNIT NO.	SUB CONTR UNIT NO.
LM		LM1 (31)	
		THRU	
		LM 15 (45)	

DRAWING CHANGE REQD: REVISE DWG	RECORD EO	DISPOSITION OF PARTS: REWORK	SCRAP
✓		✓	-29

	SUPPORT	RELIAB. GROUP	GROUP LEADER	STRESS GROUP	LIAISON ENGRG	PROJ ENGRG
APPROVED BY	WJ		~	JF	CH	
DATE	6/14/67		~	6-15-67	6-15-67	6/19
1	VD 1					

PROJ ENGRG: JRP 6/15/67

PRIORITY: C
DRAWING TITLE: BLANKET INSTL. ASCENT STAGE CABIN RCS SHIELD ~ FWD
DRAWING NO: LDW280-52180
EO NO.: B5

ISSUED BY P. KEISER 6/13/67 x84709 SECTION V.D.I. GROUP NO. 335 PL 5

01

NAS 9-1100

ENG 32.1 REV 3-65

GRUMMAN AIRCRAFT ENGINEERING CORP.
CODE IDENT NO. 26512

ENGINEERING ORDER

DWG. NO. LDW280-52180
EO NO. B6
CONTROL INFO NO. LM-5-13534

THIS IS A REVISION OF E.O. B1 & B4

IN E.O. EFFECTIVITY BLOCK, LM-1 THRU LM-15 WAS LM-2 THRU LM-15

RELEASED BY LIAISON

DETAIL SPEC REQ ☐ CL II ENGRG CHG ☑ CL I ENGRG CHG ☐

GAEC EO RELEASE C

REASON FOR EO: LM-1 ADDED TO DWG. BY A4 DWG. CHANGE

DESCRIPTION OF EO: REF. E.O. B1 & B4
IN E.O. EFFECTIVITY BLOCK, LM-1 THRU LM-15 WAS
LM-2 THRU LM-15

JL 31

MODEL	EFFECTIVITY: PROCURING ACTIVITY NO.	GAEC UNIT NO.	SUB CONTR UNIT NO.
LM		LM-1 (31)	
		THRU	
		LM-15 (45)	

DRAWING CHANGE REQD: REVISE DWG ✓ RECORD EO

DISPOSITION OF PARTS: REWORK ✓ SCRAP

APPROVED BY	WT			~		EWB		
DATE	6/16/67			~	6/17/67	6/17/67	7/6/67	/67
	VDI	SUPPORT	RELIAB. GROUP	GROUP LEADER	STRESS GROUP	LIAISON ENGRG	PROJ ENGRG	[redacted]

PRIORITY C

DRAWING TITLE: BLANKET INSTALLATION ASCENT STAGE CABIN RCS SHIELD FWD.

DRAWING NO. LDW280-52180

EO NO. B6

ISSUED BY F. STEINMETZ X86510A SECTION VDI GROUP NO. 335 PL 5

01

NAS 9-1100

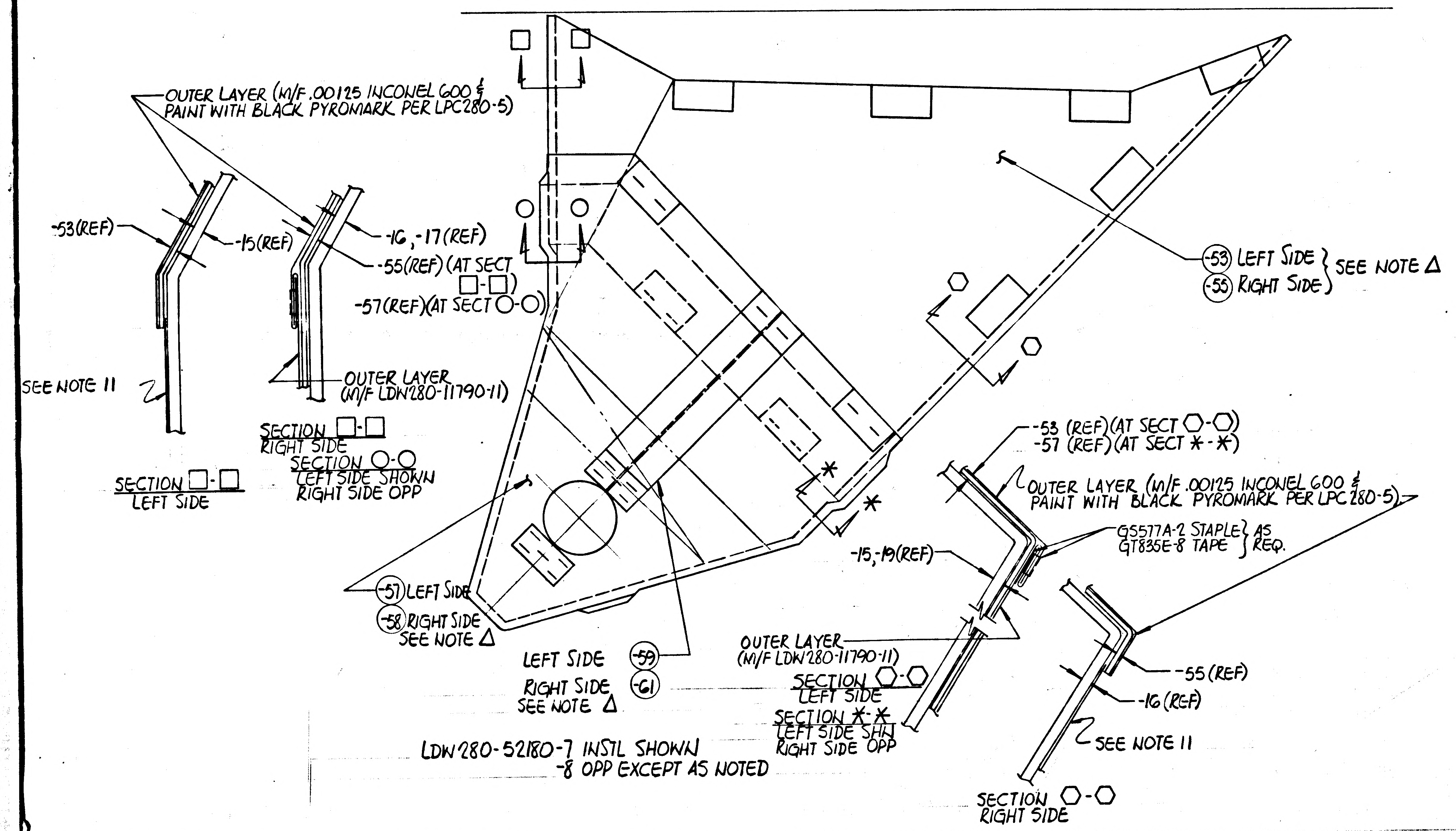
OUTER LAYER (M/F .00125 INCONEL 600 & PAINT WITH BLACK PYROMARK PER LPC280-5)
-53(REF)
-15(REF)
-16, -17(REF)
-55(REF) (AT SECT □-□)
-57(REF)(AT SECT ○-○)
SEE NOTE 11
OUTER LAYER (M/F LDW280-11790-11)
SECTION □-□ RIGHT SIDE
SECTION ○-○ LEFT SIDE SHOWN RIGHT SIDE OPP
SECTION □-□ LEFT SIDE
-53 LEFT SIDE
-55 RIGHT SIDE } SEE NOTE Δ
-53 (REF)(AT SECT ⬡-⬡)
-57 (REF)(AT SECT ✱-✱)
OUTER LAYER (M/F .00125 INCONEL 600 & PAINT WITH BLACK PYROMARK PER LPC280-5)
GS577A-2 STAPLE } AS
GT835E-8 TAPE } REQ.
-15, -19(REF)
-57 LEFT SIDE
-58 RIGHT SIDE
SEE NOTE Δ
LEFT SIDE -59
RIGHT SIDE -61
SEE NOTE Δ
OUTER LAYER (M/F LDW280-11790-11)
SECTION ⬡-⬡ LEFT SIDE
SECTION ✱-✱ LEFT SIDE SHN RIGHT SIDE OPP
-55 (REF)
-16 (REF)
SEE NOTE 11
SECTION ⬡-⬡ RIGHT SIDE
LDW280-52180-7 INSTL SHOWN
-8 OPP EXCEPT AS NOTED

Ⓐ

GRUMMAN AIRCRAFT ENGINEERING CORP.
CODE IDENT NO. 26512
ENGINEERING ORDER

DWG NO. LDW280-52180 EO NO. B7
CONTROL INFO NO. LDW2[illegible]A3341

① REMOVE NOTE 22.
REVISE NOTE 21: "ON -1 & -2 INSTL LDW280-52180-25, -26, -27, -28 & -29 BLANKET - ETC"
S/B "ON -1 & -2 INSTL LDW280-52180-23, -25, -26, -27, -28, -29 & -31 BLANKET ETC."
ADD NOTE ◇: "FINAL CONFIGURATION OF BLANKETS TO BE DETERMINED FROM ENGINEERING APPROVED MASTER TEMPLATES."

② CREATE -7 & -8, IDENTICAL TO -1 & -2 EXCEPT -53 REPLACES -23; -55 REPLACES -31; -57 REPLACES -25; -58 REPLACES -26; -59 REPLACES -47, -61 REPLACES -29 & -9 & -10 REPLACE -3 & -5 RESP.

ADD NOTE Δ - ON -7 & -8 INSTL -53, -55, -57, -58, -59 & -61 BLANKETS CONSIST OF (3) LAYERS OF BRIGHT ROLLED NICKEL FOIL, COMMERCIALLY PURE (.0005 THICK) ANNEALLED CONDITION WITH (3) LAYERS OF KNIT PATTERN SQUARE TYPE WIRE CLOTH SLEEVING, 5 TO 7 SQUARES PER LINEAL INCH, WIRE TO BE INCONEL 600 (.0035/.0040) DIA ROUND. OUTER LAYER TO BE MADE FROM .00125 INCONEL 600 PAINTED WITH BLACK PYROMARK AND M/F LDW280-11790-11 AS DEFINED IN F/D.

ADD -9 & -10 SAME AS -3 & -5 EXCEPT -53 & -55 REPLACE -23 & -31 RESP.

ADD -53 SAME AS -23 EXCEPT AS NOTED.
-55 -31
-57 -25
-58 -26
-59 -47
ADD -61 SAME AS -29 EXCEPT AS NOTED.

-1 & -2 WAS EFF. LM1 THRU LM15 NOW LM1
-7 & -8 N/A LDW280-51173 LM2 (1) REQ
LDW280-53173 LM3 THRU LM15 (1) REQ

⬡, ○, □, ✱ USE NEXT AVAILABLE SECTION LETTERS.
◇ Δ USE NEXT AVAILABLE NO.

REWORK INFORMATION: -7 & -8 MAY BE MADE BY REWORKING -1 & -2.

FULL SIZE SHEET AREA (17x36) = 4.25 FT^{2}

DESCRIPTION OF EO:
REMOVED NOTE 22 & TO NOTE -21 ADDED -23, -31 (DRAFTING ERROR CORRECTION)
ADDED -7, -8, -9, -10, -53, -55, -57, -58, -59 & -61. FROM -1 & -2, REMOVED LM-2 THRU LM-15 REQMTS.
ADDED NOTES Δ & ◇.

DETAIL SPEC CHG ☐	CL II ENGRG CHG ☐	CL I ENGRG CHG ✓	LCD 1847		5

REASON FOR EO: NEW PARTS REQD FOR PLUME PROTECTION
DESCRIPTION OF EO: SEE ABOVE
GAEC EO RELEASE: VK 8/26/[illegible]

MODEL	PROCURING ACTIVITY NO.	GAEC UNIT NO.	SUB CONTR UNIT NO.
LM		LM2(32) THRU LM15(45)	

DRAWING CHANGE REQD: ✓ REVISE DWG ☐ RECORD NO
DISPOSITION OF PARTS: ✓ REWORK ☐ SCRAP
APPROVED BY — VDI — SUPPORT — RELIAB GROUP — GROUP LEADER — STRESS GROUP — LIAISON ENGRG — PROJ ENGRG

PRIORITY	DRAWING TITLE	DRAWING NO.	EO NO.
C	BLANKET INSTL. A/S CABIN-RCS-SHIELD-FWD	LDW280-52180	B7

8/28
ISSUED BY SALVADOR X7033 SECTION VDI GROUP NO. 335 PL. 25

NAS 9-1100

ENG 22.2 REV 3-65

GRUMMAN AIRCRAFT ENGINEERING CORP.
CODE IDENT NO. 26512
ENGINEERING ORDER

DWG. NO. LDW280-52180
EO NO. B8
CONTROL INFO NO. LDW280A9463

TO -1 INSTL ADD -63-65-67 & -69 BLANKET ASSY'S AND TO-2 INSTL ADD -64-66-68 & -70 BLANKET ASSY'S. (ITEMS REQUIRED TO CREATE THE ABOVE ASSY'S ARE NOTED BELOW.)

REMOVE -25-27-29 & -51 FROM -1 INSTL & ADD THEM TO -63-65-67 & -69 ASSY'S RESPECTIVELY.

REMOVE -26-28-47 & -49 FROM -2 INSTL & ADD THEM TO -64-66-68 & -70 ASSY'S RESPECTIVELY.

REMOVE -45 & -46 FROM -1 & -2 INSTL'S & ADD THEM TO -3 & -5 ASSY'S RESPECTIVELY.

TO -3-5 & -63 THRU -70 ASSY'S ADD THE FOLLOWING ITEMS "AS REQD":

-35 (TAPE)
GT535L-HA0020 (TAPE HOOK)
LDW280P10871-11 (TAPE)
GS577A-2 (STAPLE)

TO-3-5 & -63 THRU -66 ASSY'S ADD GT535L -LA0020 (TAPE LOOP) "AS REQD".

TO -3 & -5 ASSY'S ADD GT835P-8 (TAPE) "AS REQD".

ALSO, IN GENERAL NOTES REMOVE "ON -1 & -2 INSTL" FROM NOTES #21 & #22 & IN NOTES #6 & #8 "LDW280-28180" SHOULD BE "LDW280-52180." REVISE NOTE #3 TO READ "GS577A-1 STAPLES MAY BE INSTALLED USING BOSTITCH PLIER P3 (REF)."

SHOP NOTE: THIS IS A PAPER CHANGE & AS SUCH REQUIRES NO REWORK. QUANTITIES OF ITEMS SHIFTED FROM ONE ASSY AND/OR INSTL TO ANOTHER WILL NOT HAVE CHANGED.

DETAIL SPEC REQ ☐ CL II ENGRG CHG ✓ CL I ENGRG CHG ☐ LCD 2179

REASON FOR EO: SHIPMENT OF ITEMS SEPARATE OF VEHICLE REQUIRES ASSEMBLY DASH NUMBER IDENTIFICATION

DESCRIPTION OF EO: ADDED -63 THRU -70 ASSY'S TO -1 & -2 INSTL. REMOVED -45 & -46 FROM -1 & -2 & ADDED THEM TO -3 & -5 ASSY'S RESPECTIVELY.

GAEC EO RELEASE: JK 10/18/67

MODEL	PROCURING ACTIVITY NO.	GAEC UNIT NO.	SUB CONTR UNIT NO.
LM		LM-1 (31)	
		THRU	
		LM-15 (45	

DRAWING CHANGE REQD: REVISE DWG ✓ RECORD EO
DISPOSITION OF PARTS: REWORK NOT REQD SCRAP

			RELIAB. GROUP	GROUP LEADER	STRESS GROUP	LIAISON ENGRG	PROJ ENGRG	
APPROVED BY								
DATE	10/5/67			10/4/67	10/5/67		10/18/67	10-18-67
	T	VDI	~~[illegible]~~ THERM					

PRIORITY: C
DRAWING TITLE: BLANKET INSTL ~ ASCENT ~ CABIN RCS SHIELD ~ FWD
DRAWING NO. LDW280-52180
EO NO. B8

10-10
ISSUED BY ART WILSON X7033 9/20/67 SECTION VDI GROUP NO. 335 PL 25

01 NAS 9-1100

TPS 304

ENG 32.1 REV 3-65

GRUMMAN AIRCRAFT ENGINEERING CORP.
CODE IDENT NO. 26512
ENGINEERING ORDER

DWG. NO. LDW280-52180 | EO NO. B9
CONTROL INFO NO. LM-83- 2127

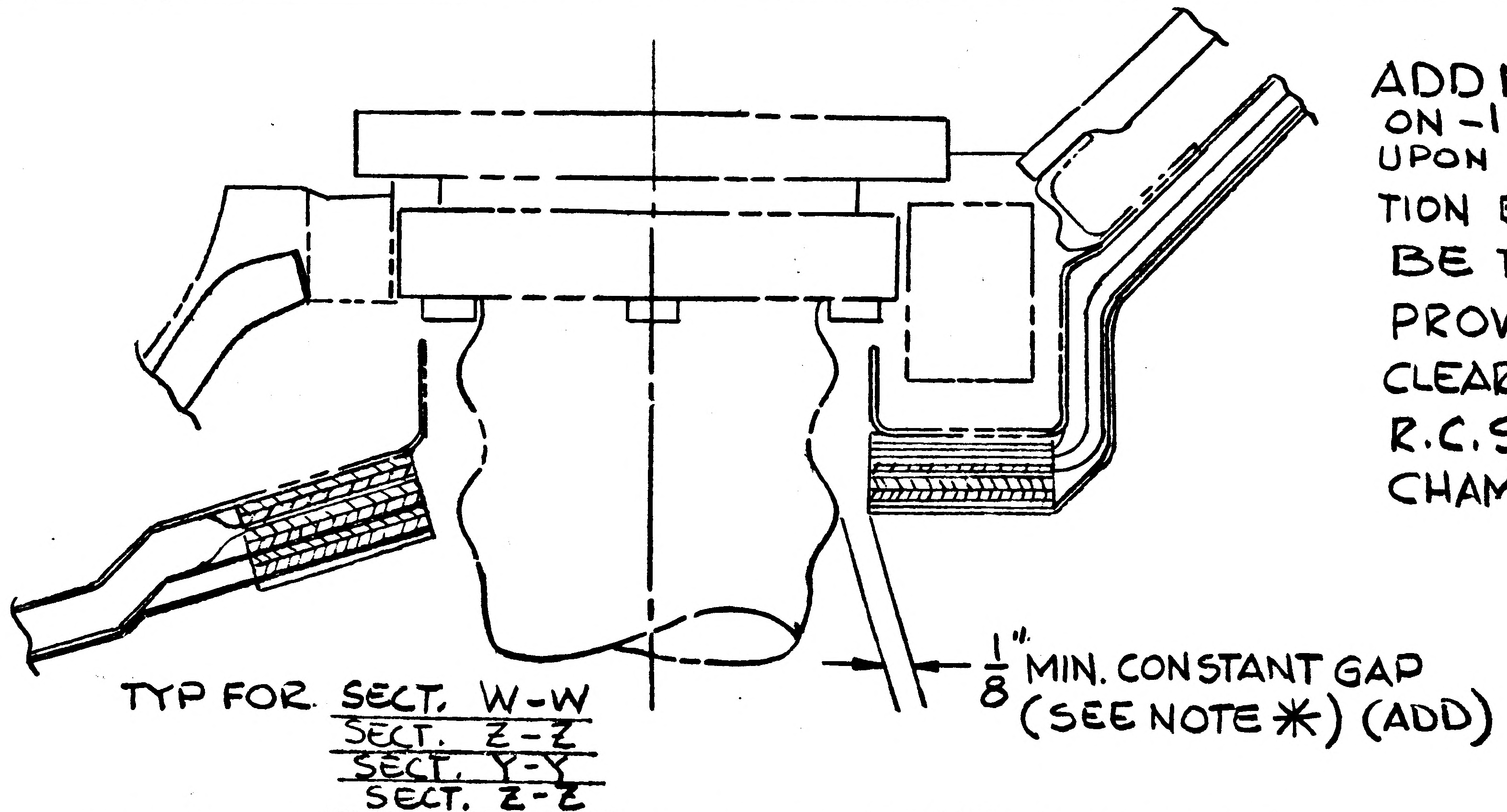

ADD NOTE ✱:
ON -1 & -2 INSTALLATION UPON FINAL INSTALLATION BLANKETS MAY BE TRIMMED TO PROVIDE 1/8" MIN. CLEARANCE AROUND R.C.S. COMBUSTION CHAMBERS.

FOR ✱ USE NEXT AVAILABLE NOTE NUMBER

DETAIL SPEC REQ		CL II ENGRG CHG		CL I ENGRG CHG	✓	LCD 10774	83

REASON FOR EO	DESCRIPTION OF EO	GAEC EO RELEASE
TO PROVIDE ADEQUATE CLEARANCE AROUND R.C.S. COMBUSTION CHAMBERS REF. S/C-D.R.# 001	ON -1 & -2 ADDED NOTE ✱, ON SECT. W-W Z-Z, Y-Y AND V-V ADDED 1/8" DIMENSION	JK 11/8/7

MODEL	PROCURING ACTIVITY NO.	GAEC UNIT NO.	SUB CONTR UNIT NO.
LM		LM-1 (31)	

DRAWING CHANGE REQD		DISPOSITION OF PARTS	
✓		✓	
REVISE DWG	RECORD EO	REWORK	SCRAP

APPROVED BY	[illegible]	ES	[illegible]	WD	[illegible]	MAK	Plunkett	[illegible]
DATE	10/25		11/6/67	10/25	10/2/67	10/25/67	2500	10-25
	SYS	SUPPORT	~~RELIAB GROUP~~	GROUP LEADER	STRESS GROUP	LIAISON ENGRG	PROJ ENGRG	

PRIORITY	DRAWING TITLE	DRAWING NO.	EO NO.
C	BLANKET INSTALLATION - A/S CABIN - R.C.S. - SHIELD - FWD VDI	LDW280-52180	B9

ISSUED BY CARLOS PAEZ X2818 SECTION V.D.I. GROUP NO. 812 PL 83

01 NAS 9-1100

ENG 32.1 REV 3-65

GRUMMAN AIRCRAFT ENGINEERING CORP.
CODE IDENT NO. 26512

ENGINEERING ORDER

DWG. NO. LDW280-52180	EO NO. B10
CONTROL INFO NO. LM-83-2209	

THIS IS A REVISION OF EO B9
ON-1¢-2

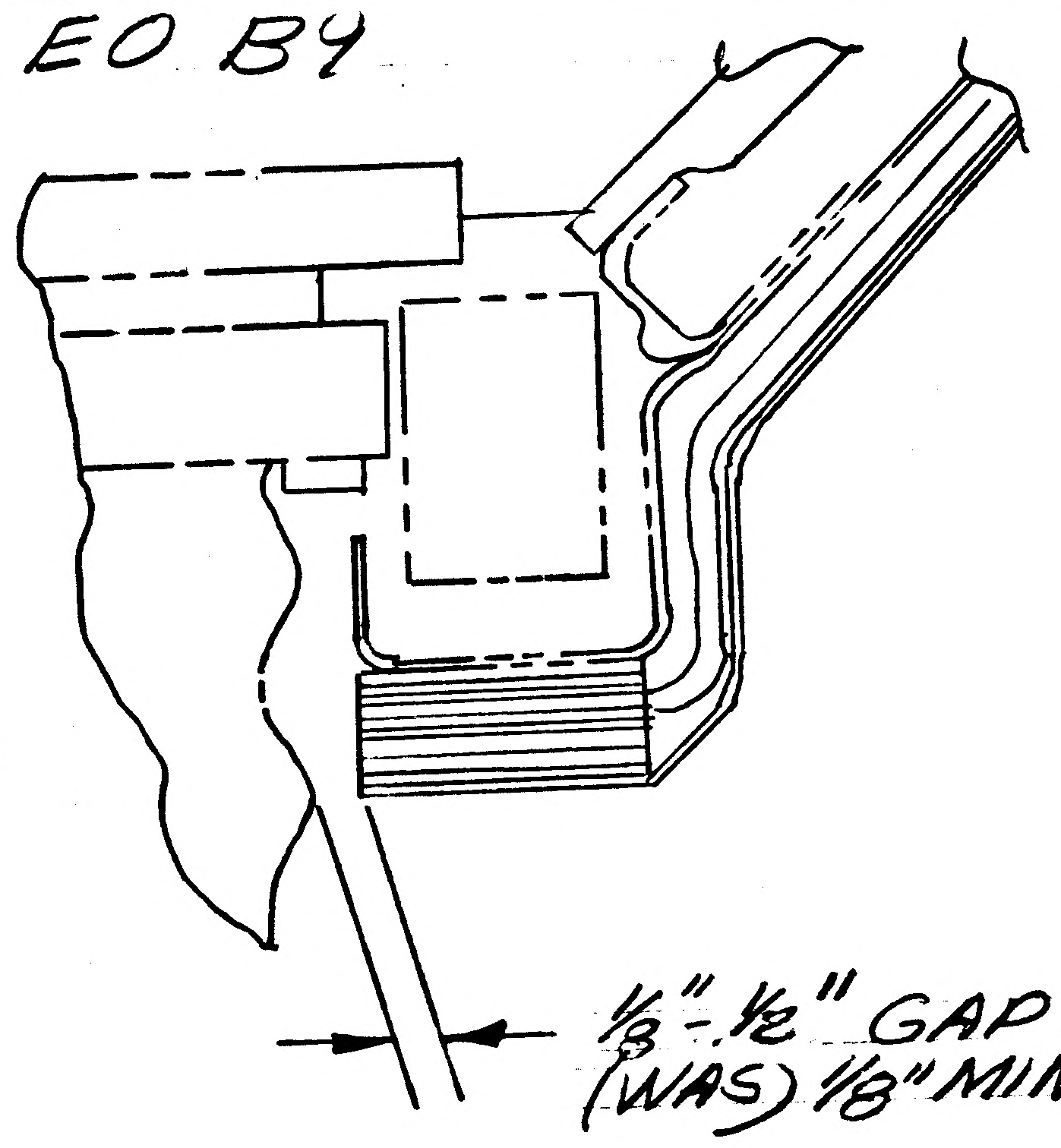

1/8"-1/2" GAP (SEE NOTE*)
(WAS) 1/8" MIN CONSTANT GAP (SEE NOTE*)

DETAIL SPEC REQ ☐	CL II ENGRG CHG ☐	CL I ENGRG CHG ✓	LCD-10774											
REASON FOR EO			DESCRIPTION OF EO											GAEC EO RELEASE
TO CORRECT MISLEADING INFO. REF EO B9, REF SK DR# 001			REF EO B9 ON-1¢-2 REMOVED "CONSTANT" FROM 1/8 MIN GAP.											5 JM
MODEL	EFFECTIVITY		DRAWING CHANGE REQD		DISPOSITION OF PARTS		APPROVED BY	M.D.	RB	BPA	JAP		MAK	Plunkett
	PROCURING ACTIVITY NO.	GAEC UNIT NO. / SUB CONTR UNIT NO.	REVISE DWG ✓	RECORD EO	REWORK ✓	SCRAP	DATE	3 Nov	3 Nov	11/11/67	11/3	11/3/67	11/3/67	3 Nov / 11-3-67
LM		LM-1(31)						THERMO	SYS	~~SUPPORT~~	~~RELIAB. GROUP~~ VDI	GROUP LEADER	STRESS GROUP / LIAISON ENGRG	PROJ ENGRG / ~~GOVT~~
			PRIORITY C	DRAWING TITLE: BLANKET INSTALL ~ A/S CABIN ~ R.C.S. ~ SHIELD ~ FWD						DRAWING NO. LDW280-52180				EO NO. B10

ISSUED BY LIAISON ~ J. KOSLOSKI x2818 SECTION V.D.I. GROUP NO. 816 PL 83

01

NAS 9-1100

ENG 32.1 REV 3-65

GRUMMAN AIRCRAFT ENGINEERING CORP.
CODE IDENT NO. 26512
ENGINEERING ORDER

DWG. NO. LE0280 | EO NO. 797
CONTROL INFO NO. LDW280A9764

ON THE FOLLOWING DRAWINGS REVISE EFFECTIVITIES FOR ALL DASH NO'S. *

	DWG. NO.	REMOVE **	EFFECTIVITY (WAS) ***	CHG NO.
✓	LDW280-10947	LM-2 THRU LM-15	LTA-8(18), LM-1(31) THRU LM-15(45), PR-1	C6
✓	-11286	↕	LTA-8(18), LM-1(31) THRU LM-15(45), PR-1 & TEST-75	A10
✓	-11294	↕	↕	B6
✓	-11491	↕	↕	A5
✓	-11492	↕	↕	A4
✓	-P11675	LM-2 THRU LM-15	LTA-8(18), LM-1(31) THRU LM-15(45), PR-1 & TEST-75	A4
✓	-28495	LM-2	LTA-8(18), LM-1(31) & LM-2(32)	B5
✓	-28496	LM-2	LTA-8(18), LM-1(31) & LM-2(32)	C8
✓	-28871	LM-2 & LM-3	LTA-8(18), LM-1(31), LM-2(32) & LM-3(33)	B1
✓	-28872	LM-2 & LM-3	LTA-8(18), LM-1(31), LM-2(32) & LM-3(33)	B4
✓	-52180	LM-2 THRU LM-15	LM-1(31) THRU LM-15(45)	C1
	LDW280-52897	LM-2 THRU LM-15	LM-1(31) THRU LM-15(45)	C5

DETAIL SPEC REQ ☐ | CL II ENGRG CHG ☐ | CL I ENGRG CHG ☑ LCD2229

REASON FOR EO: REDESIGN OF REACTION CONTROL SYSTEM THRUSTER CLUSTER THERMAL SHIELD & BLANKET

DESCRIPTION OF EO:
FOR *
REMOVED: EFFECTIVITY **
EFFECTIVITY (WAS) ***

GAEC EO RELEASE: JK 11/15/67

MODEL	EFFECTIVITY: PROCURING ACTIVITY NO.	GAEC UNIT NO.	SUB CONTR UNIT NO.
LM	NOTED ABOVE		

DRAWING CHANGE REQD: REVISE DWG ✓ | RECORD EO
DISPOSITION OF PARTS: REWORK | SCRAP ✓

	R	V.D.I.	SUPPORT	RELIAB. GROUP	GROUP LEADER	STRESS GROUP	LIAISON ENGRG	PROJ ENGRG	
APPROVED BY									
DATE		11/10/67			11-10-67	11/14/67		11/21/67	11-14-67

PRIORITY	DRAWING TITLE	DRAWING NO.	EO NO.
C	"SEE DWG."	LEO 280	797

11-20
ISSUED BY F. CURASI X7033 & GM GREEN X1392 SECTION VEH. DES. INT. GROUP NO. 335 PL 25

01

NAS 9-1100

my

ENG 32.1 REV 3-65

GRUMMAN AIRCRAFT ENGINEERING CORP.
CODE IDENT NO. 26512

ENGINEERING ORDER

DWG NO. LEO 280 EO NO. 819
CONTROL INFO NO. LM 29-1125

ON DWGS LISTED BELOW IN F/D & B/M ADD 6S577A-4 (A/R) STAPLES IN ADDITION TO 6S577A-1 & 6S577A-2 STAPLES AS APPLICABLE. SOURCE IS SAME AS 6S577A-1 & -2.

DWG NO.	TITLE	CH.NO.
LDW280-28885-3;5;7; -11;13;15 & -17 ✓	SEE DWG	B 9
LDW280-52897-73 -75 -77 -79 ✓ -74 -76 -78 -80	↕	C6
LDW280-52180-63 -65 -67 ✓ -69 -64 -66 -68 -70	SEE DWG	C2

DETAIL SPEC REQ ☐ CL II ENGRG CHG ☑ CL I ENGRG CHG ☐ (29)

REASON FOR EO: TO ALLOW FOR GREATER AVAILABILTY & VARIATION OF LENGTHS.

DESCRIPTION OF EO: IN F/D & B/M ADDED 6S577A-4 STAPLES.

GAEC EO RELEASE: VC

MODEL	PROCURING ACTIVITY NO.	GAEC UNIT NO.	SUB CONTR UNIT NO.
LM		NONE	

DRAWING CHANGE REQD: REVISE DWG ✓ RECORD EO

DISPOSITION OF PARTS: NOT REQD (REWORK / SCRAP)

		SUPPORT	RELIAB. GROUP	GROUP LEADER	STRESS GROUP	LIAISON ENGRG	PROJ ENGRG	CONF
APPROVED BY	JMS			—	DV	W.F.	JP	B.H.
DATE	12/20/67			—	12/20	12-20-67	12/20/67	12-20-67
	VDI							

PRIORITY E29 DRAWING TITLE NOTED ABOVE DRAWING NO. LEO 280 EO NO. 819

ISSUED BY LIAISON C.J. MONTEBELLO X7930 SECTION VDI GROUP NO. 335 PL 25

01

NAS 9-1100

LDW280-52265

MODEL OR END ITEM	NEXT ASSY	MODULE OR SER NO. / GAEC SCH NO.	REQD PER MODULE OR END ITEM
LEM	LDW280-52002	LEM-2(32)	1 EA

PART NO. LDW280-52265-1,-2

MODEL OR END ITEM	NEXT ASSY	MODULE OR SER NO. / GAEC SCH NO.	REQD PER MODULE OR END ITEM

PART NO.

MODEL OR END ITEM	NEXT ASSY	MODULE OR SER NO. / GAEC SCH NO.	REQD PER MODULE OR END ITEM
		3/-1	

PART NO.

TO BE REDRAWN ON PRODUCTION FORMAT 5

SH REV STATUS: FOR DESCRIPTION OF REV SEE SUBQ SH

SHEET	1.00		2.00	3.00					
REV									
SHEET									
REV									
SHEET									
REV									

LAST SECT LTR USED

LAST DASH NO. USED -2

GRUMMAN REL INFO

PRIM NO. 215

FR(001) NP 7/22/6

UNLESS OTHERWISE SPECIFIED DIMENSIONS ARE IN INCHES.

TOLERANCE UNLESS SPECIFIED FRACTIONS - DECIMALS – ANGLES ± 1/32 ±.020 ± 1/2°

ORIG DWG AUTH

DETAIL SPEC REQUIREMENT

CLASS II ENGRG CHANGE

CLASS I ENGRG CHANGE

CONTRACT NO. NAS 9-1100

LINE ITEM #1

DOCUMENTATION TYPE II

DRAWN BY G.PELLEGRINO

LAYOUT BY J.CARROLL

CHECKED BY

GR ENGR 7/14/66

V DI 7/14

STRUCT 7/15

STRUCT 7/19

WTS 7-25

PROJ ENGR 7-26

REL GROUP 7-26-66

GRUMMAN AIRCRAFT ENGRG CORP
BETHPAGE, L. I., NEW YORK

SUPPORT INSTL-
ASCENT MID-SECT -Z27 ECS SERVICE PTS

SIZE B

CODE IDENT NO. 26512

LDW280-52265

SCALE FULL NONE

SHEET 1.00 OF 3

ENG 77.1 12-65

01

NAS 9-1100

QTY PER ASSEMBLY -2	QTY PER ASSEMBLY -1	CODE IDENT	PART NO.	I&T	NOMENCLATURE OR DESCRIPTION	MATERIAL	GOVT SPEC	COML SPEC	STOCK SIZE	PROCESS SYM	FINISH NO.	ZONE
2	2		GB11D-8-76	E	BRACKET ASSY	GRUMMAN STD						
4	4		NAS673V4	E	BOLT	STD PART						
4			NAS696A3	E	NUTPLATE	STD PART						
4	4		MS21042L3	E	NUT	STD PART						
			MS20470AD4	E	RIVET	STD PART						
4	4		AN960D10	E	WASHER	STD PART						
	1		LDW280M10743-1	E	SUPPORT ASSY	SEE DWG						
1	1		LDW280M10742-1	E	SUPPORT ASSY	SEE DWG						
	2		LDW280-10643-11	E	STIFFENER	SEE DWG						
			LDW280-52265-2	E	SUPPORT INSTL							
			LDW280-52265-1	E	SUPPORT INSTL					NONE	NONE	

SYM OR NO.	PROCESS OR FINISH	GRUMMAN SPEC OR MILITARY SPEC	SYM OR NO.	PROCESS OR FINISH	GRUMMAN SPEC OR MILITARY SPEC	SYM OR NO.	PROCESS OR FINISH	GRUMMAN SPEC OR MILITARY SPEC

I & T: IDENTIFICATION AND TRACEABILITY IN ACCORDANCE WITH : NONE

GRUMMAN AIRCRAFT ENGRG CORP, BETHPAGE, L. I., NEW YORK

SIZE B

CODE IDENT NO. 26512

LDW280-52265

SCALE NONE

SHEET 2.00

ENG 77.2 7-65

01

NAS 9-1100

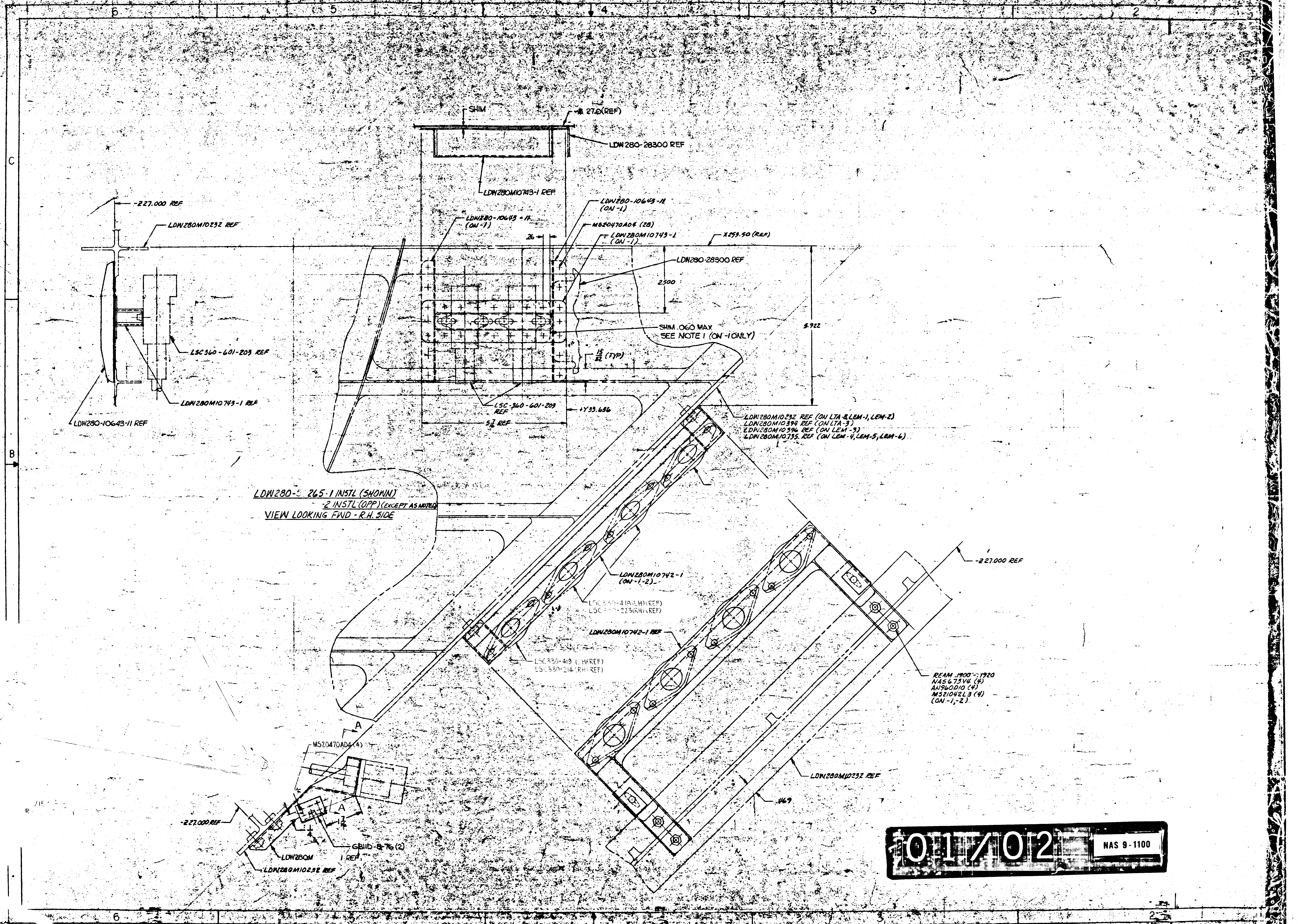

LDW280-5 265-1 INSTL (SHOWN)
-2 INSTL (OPP) (EXCEPT AS NOTED)
VIEW LOOKING FWD - R.H. SIDE

6
5
4
3
2
C
B
SHIM
27.0(REF)
LDW280-28300 REF
LDW280M10743-1 REF
-227.000 REF
LDW280M10232 REF
LDW280-10643-11
(ON -1)
MS20470AD4 (28)
LDW280M10743-1
(ON -1)
X253.50 (REF)
LDW280-10643-11
(ON -1)
26
LDW280-28300 REF
2.500
SHIM .060 MAX
SEE NOTE 1 (ON -1 ONLY)
5.922
15/32 (TYP)
LSC360-601-203 REF
LDW280M10743-1 REF
LDW280-10643-11 REF
LSC-360-601-203
REF
+Y33.656
5 7/16 REF
LDW280M10232 REF (ON LTA-8, LEM-1, LEM-2)
LDW280M10394 REF (ON LTA-3)
LDW280M10396 REF (ON LEM-3)
LDW280M10735 REF (ON LEM-4, LEM-5, LEM-6)
LDW280M10742-1
(ON -1, -2)
LSC330-418 (LH) (REF)
LSC330-223 (RH) (REF)
LDW280M10742-1 REF
-227.000 REF
LSC330-419 (LH) (REF)
LSC330-214 (RH) REF)
REAM .1900 - .1920
NAS673V4 (4)
AN960D10 (4)
MS21042L3 (4)
(ON -1, -2)
LDW280M10232 REF
.469
A
MS20470AD4 (4)
A
1 7/16
1/4
-227.000 REF
GB11D-8-76 (2)
LDW280M
1 REF
LDW280M10232 REF

01/02 NAS 9-1100

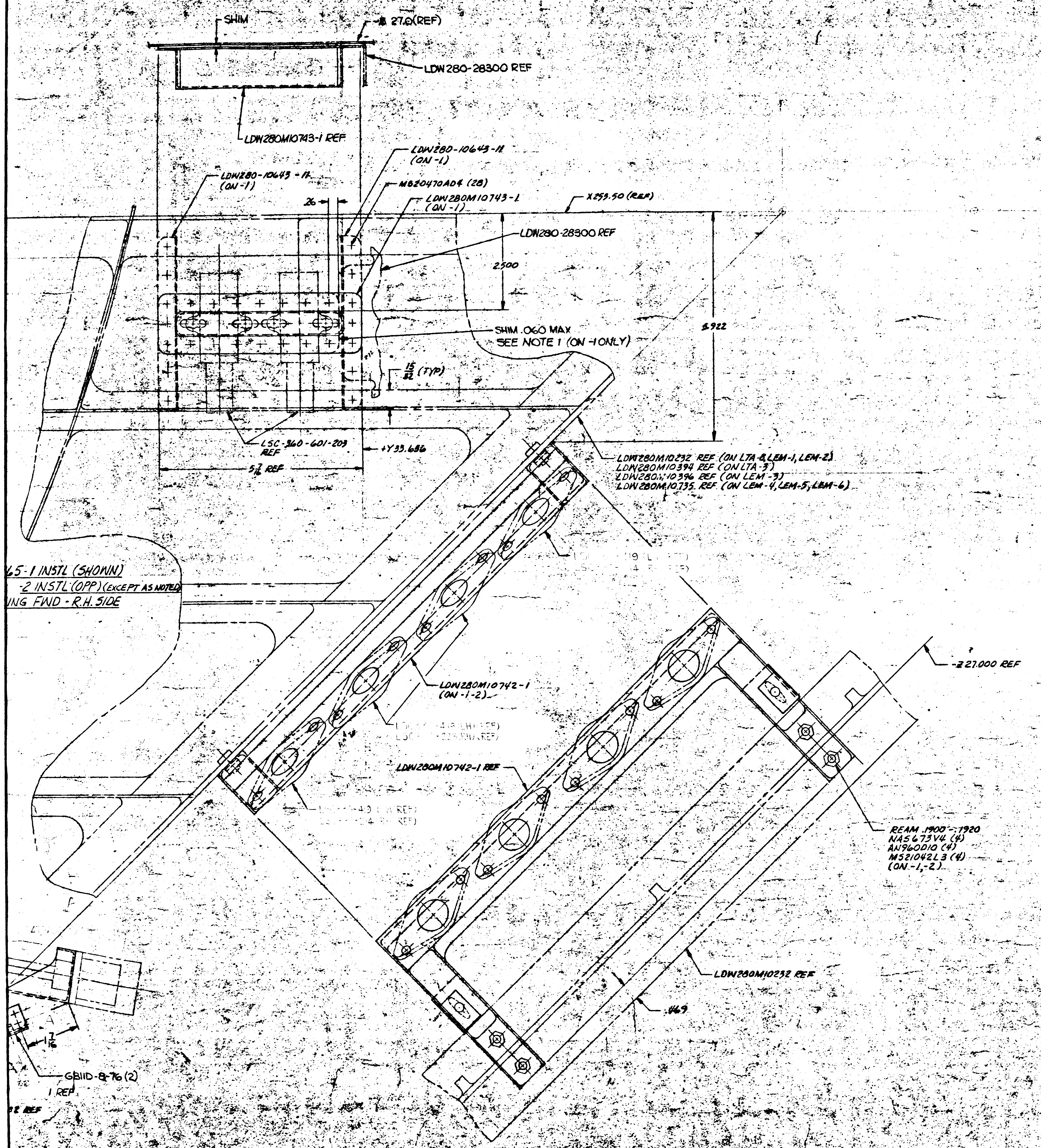
SHIM
27.0(REF)
LDW280-28300 REF
LDW280M10743-1 REF
LDW280-10643-11
(ON -1)
LDW280-10643-11
(ON -1)
MS20470AD4 (28)
LDW280M10743-1
(ON -1)
X253.50 (REF)
26
LDW280-28300 REF
2.500
5.922
SHIM .060 MAX
SEE NOTE 1 (ON -1 ONLY)
15/32 (TYP)
LSC-360-601-209
REF
+Y33.686
5 7/16 REF
LDW280M10232 REF (ON LTA-8, LEM-1, LEM-2)
LDW280M10394 REF (ON LTA-3)
LDW280M10396 REF (ON LEM-3)
LDW280M10735 REF (ON LEM-4, LEM-5, LEM-6)
65-1 INSTL (SHOWN)
-2 INSTL (OPP) (EXCEPT AS NOTED)
ING FWD - R.H. SIDE
LDW280M10742-1
(ON -1-2)
LDW280M10742-1 REF
-Z27.000 REF
REAM .1900-.1920
NAS673V4 (4)
AN960D10 (4)
MS21042L3 (4)
(ON -1,-2)
LDW280M10232 REF
.469
A
1 7/16
GB11D-8-76 (2)
1 REF
REF

NOTES

1. SHIM AS REQUIRED MATL: 2024-T3 AL ALY, MIL SPEC QQ-A-362, FINISH # 76 PER LSP14-9010.

MANUFACTURING OPERATIONS

UNLESS OTHERWISE SPECIFIED
NOTES CHECKED √ APPLY TO THIS DWG.

PART NUMBER AND ALL OTHER MARKINGS IN REGION MARKED ☒ USE BOTH SIDES IF NECESSARY.

FILLET AND INSIDE CORNER RADII TOLERANCES
.016R TO .062R ± .010
.063R TO .250R ± .015
OVER .250R ± .030

DEPTH SHOWN FOR TAPPED HOLES IS FULL THDS. 2-3 IMP THDS. BEYOND PERMISSIBLE.

EXTERNAL THREAD LENGTH SHOWN INCLUDES 2 IMPERFECT THREADS MAX.

DO NOT CADMIUM PLATE & PAINT HOLES OR SURFACES MARKED WITH DOUBLE ASTERISK.

MISMATCH STEP OF ± .005 PERMISSIBLE DUE TO CHANGE OF CUTTERS AT INSIDE INTERSECTING SURFACES.

DIAMETERS MARKED MUST BE CONCENTRIC WITHIN FULL INDICATOR READING

HOLES MUST BE KEPT FREE OF CHROME PLATING SOLUTION.

ALL DIMENSIONS SHOWN TO BE MET AFTER CADMIUM PLATING. THICKNESS OF PLATE .0003 MIN. TO .0005 MAX. MIN. THICKNESS TO BE .0002 ON THREADED AREAS. NO ALLOWANCE FOR PLATING IN HOLES

125 √ SURFACE ROUGHNESS INCLUDING REAMED HOLES PER MIL-STD-10

200 √ FOR ALL DRILLED HOLES

REMOVE ALL BURRS. BREAK ALL EDGES .015-.031

INSPECTION INFORMATION MINIMUM PERMISSIBLE AVERAGE EDGE DISTANCE MARKED IS

SYMBOL √ DENOTES SURFACE TO BE MACHINED

UNLESS OTHERWISE SPECIFIED TOLERANCE ON FLANGES IS ± 1/32

LENGTHS OF AN, NAS & MS AL ALY RIVETS SHORTER THAN 1 INCH ARE NOT SPECIFIED.

TOLERANCE ON LOFTED DELINEATIONS IS

DWG SIZE 34 X 58

PRINTING INFO ONLY
FULL SIZE SHEET AREA (36 X 60)= 15 SQ. FT.
1/2 SIZE SHEET AREA (1/4 OF FULL)= 3.75 SQ. FT.

PRINT TRIM LINE

LDW280-52265 A

LDW280-52265 A

02/02

NAS 9-1100

GRUMMAN AIRCRAFT ENGRG CORP., BETHPAGE, L. I., NEW YORK

LEM	SIZE J	CODE IDENT NO. 26512	LDW280-52265
MODEL OR END ITEM	SCALE FULL		SHEET 3.00

LDW280-52267

MODEL OR END ITEM	NEXT ASSY	MODULE OR SER NO.	REQD PER MODULE OR END ITEM
LEM	LDW280-65012	LEM-15(45)	1 EA
LEM	LDW280-64012	LEM-14(44)	1 EA
LEM	LDW280-63012	LEM-13(43)	1 EA
LEM	LDW280-62012	LEM-12(42)	1 EA
LEM	LDW280-61012	LEM-11(41)	1 EA
LEM	LDW280-60012	LEM-10(40)	1 EA
LEM	LDW280-59012	LEM-9(39)	1 EA
LEM	LDW280-58012	LEM-8(38)	1 EA
LEM	LDW280-57012	LEM-7(37)	1 EA
LEM	LDW280-56012	LEM-6(36)	1 EA
LEM	LDW280-55012	LEM-5(35)	1 EA
LEM	LDW280-54012	LEM-4(34)	1 EA
LEM	LDW280-53012	LEM-3(33)	1 EA
LEM	LDW280-52012	LEM-2(32)	1 EA
PART NO. LDW280-52267-1 & -2		GAEC SCH NO. 32-2	

MODEL OR END ITEM	NEXT ASSY	MODULE OR SER NO.	REQD PER MODULE OR END ITEM
PART NO.		GAEC SCH NO.	

MODEL OR END ITEM	NEXT ASSY	MODULE OR SER NO.	REQD PER MODULE OR END ITEM
PART NO.		GAEC SCH NO.	

3

SH REV STATUS: FOR DESCRIPTION OF REV SEE SUBQ SH

SHEET	1.00		2.00	3.00						
REV										
SHEET										
REV										
SHEET										
REV										

LAST SECT LTR USED		GRUMMAN REL INFO			
LAST DASH NO. USED	-2	PRIM NO.	LE(001)		
		215	MP-8-5-6		

UNLESS OTHERWISE SPECIFIED DIMENSIONS ARE IN INCHES.
TOLERANCE UNLESS SPECIFIED
FRACTIONS - DECIMALS – ANGLES
±1/32 ±.020 ±1/2°
ORIG DWG AUTH
DETAIL SPEC REQUIREMENT
CLASS II ENGRG CHANGE
CLASS I ENGRG CHANGE

CONTRACT NO. NAS 9-1100
LINE ITEM # 1
DOCUMENTATION TYPE II

DRAWN BY	A. SCHMADTKE 6-20-66	RELIABILITY	
LAYOUT BY	P. TORRACO 7-26		
CHECKED BY	EG 7-23-66		
GR LEADER	7/28/66		
VEH DES INT	7/29		
STRUCTURES	8/3	PROJ ENGR	8-11
STRUCTURES	8-3	REL GROUP	Bott 8-11-66
WEIGHTS	8-8		

GRUMMAN AIRCRAFT ENGRG CORP
BETHPAGE, L. I., NEW YORK

BRACKET INSTALLATION
ASCENT STAGE-MID-SECTION-MAIN
PROPELLANT ULLAGE PRESSURE TRANSDUCER

SIZE B
CODE IDENT NO. 26512
LDW280-52267
SCALE NONE
SHEET 1.00 OF 3

ENG 77.1 12-65

01

NAS 9-1100

QTY PER ASSEMBLY -2	QTY PER ASSEMBLY -1	CODE IDENT	PART NO.	I&T	NOMENCLATURE OR DESCRIPTION	MATERIAL	GOVT SPEC	COML SPEC	STOCK SIZE	PROCESS SYM	FINISH NO.	ZONE
			NAS1097AD4	E	RIVET	STD PART						
			MS20470AD4		RIVET	STD PART						
1			LDW280-10649-16		BRACKET	SEE DWG						
	1		-15		BRACKET							
1			-14		WEB							
	1		LDW280-10649-13		WEB	SEE DWG						
			LDW280-52267-2		BRACKET INSTL					NONE	NONE	
			LDW280-52267-1	E	BRACKET INSTL					NONE	NONE	

SYM OR NO.	PROCESS OR FINISH	GRUMMAN SPEC OR MILITARY SPEC	SYM OR NO.	PROCESS OR FINISH	GRUMMAN SPEC OR MILITARY SPEC	SYM OR NO.	PROCESS OR FINISH	GRUMMAN SPEC OR MILITARY SPEC

I & T: IDENTIFICATION AND TRACEABILITY IN ACCORDANCE WITH : NONE

GRUMMAN AIRCRAFT ENGRG CORP, BETHPAGE, L. I., NEW YORK

SIZE B | CODE IDENT NO. 26512 | LDW280-52267

SCALE NONE | SHEET 2.00

ENG 77.2 7-65

01

NAS 9-1100

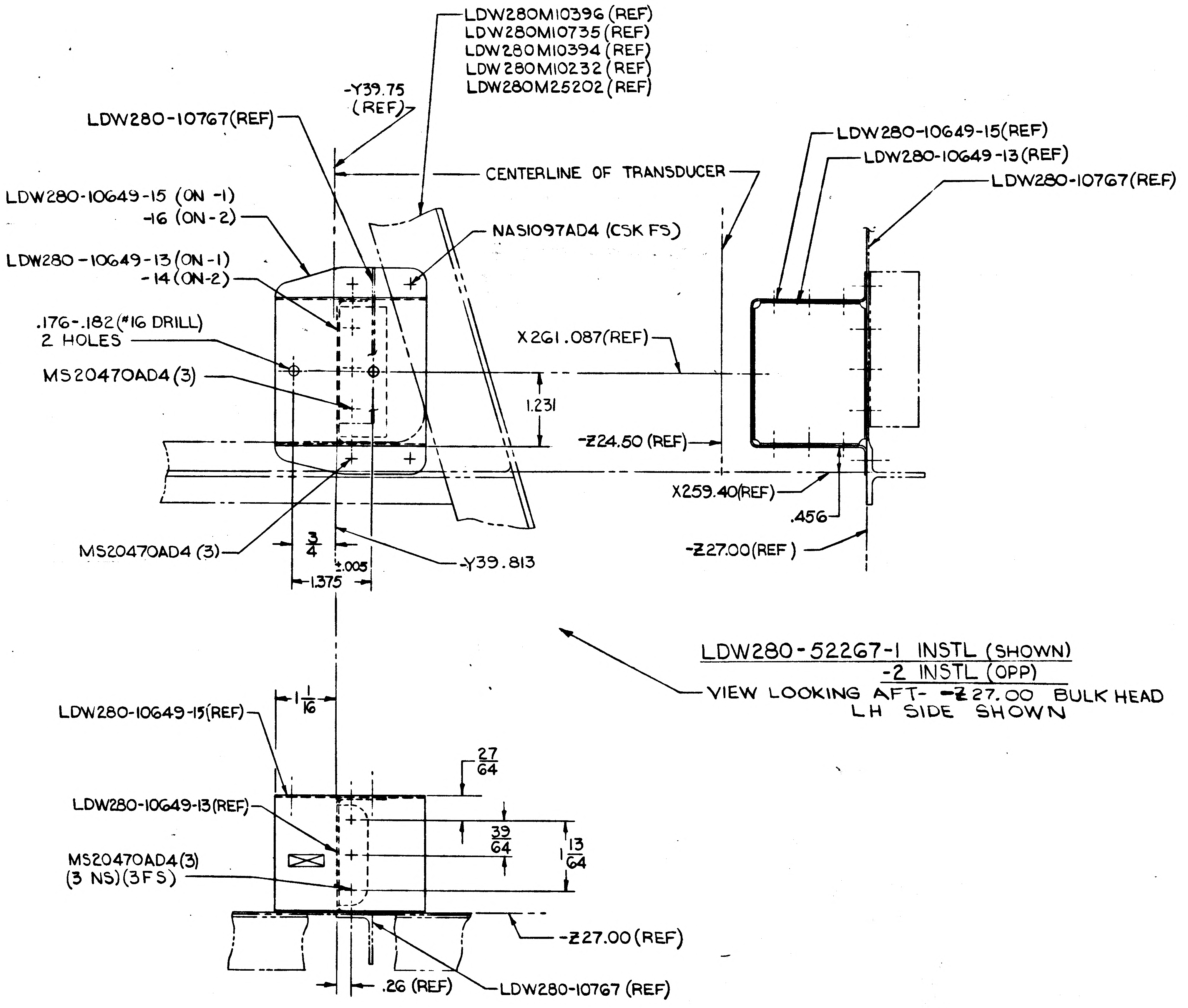
LDW280M10396 (REF)
LDW280M10735 (REF)
LDW280M10394 (REF)
LDW280M10232 (REF)
LDW280M25202 (REF)
-Y39.75 (REF)
LDW280-10767(REF)
CENTERLINE OF TRANSDUCER
LDW280-10649-15 (ON -1)
-16 (ON-2)
NAS1097AD4 (CSK FS)
LDW280-10649-13 (ON-1)
-14 (ON-2)
.176-.182 (#16 DRILL)
2 HOLES
X261.087(REF)
MS20470AD4(3)
1.231
-Z24.50 (REF)
X259.40(REF)
.456
MS20470AD4 (3)
3/4
±.005
1.375
-Y39.813
-Z27.00(REF)
LDW280-10649-15(REF)
LDW280-10649-13(REF)
LDW280-10767(REF)
1 1/16
27/64
39/64
1 13/64
LDW280-10649-15(REF)
LDW280-10649-13(REF)
MS20470AD4(3)
(3 NS)(3FS)
-Z27.00(REF)
.26 (REF)
LDW280-10767 (REF)

LDW280-52267-1 INSTL (SHOWN)
-2 INSTL (OPP)
VIEW LOOKING AFT- -Z27.00 BULK HEAD
LH SIDE SHOWN

NOTES:
1. NO TOOLING HOLES PERMITTED IN PARTS.
2. INSTALL FASTENERS PER LSP-14-15302.

MANUFACTURING OPERATIONS
UNLESS OTHERWISE SPECIFIED
NOTES CHECKED ✓ APPLY TO THIS DWG.

RUBBER STAMP PART NUMBER AND ALL OTHER MARKINGS IN REGION MARKED ⊠ USE BOTH SIDES IF NECESSARY.	✓
FILLET AND INSIDE CORNER RADII TOLERANCES .016R TO .062R ± .010 .063R TO .250R ± .015 OVER .250R ± .030	
DEPTH SHOWN FOR TAPPED HOLES IS FULL THDS. 2-3 IMP. THDS. BEYOND PERMISSIBLE	
EXTERNAL THREAD LENGTH SHOWN INCLUDES 2 IMPERFECT THREADS MAX.	
DO NOT CADMIUM PLATE & PAINT HOLES OR SURFACES MARKED WITH DOUBLE ASTERISK.	
MISMATCH STEP OF ± .005 PERMISSIBLE DUE TO CHANGE OF CUTTERS AT INSIDE INTERSECTING SURFACES.	
DIAMETERS MARKED MUST BE CONCENTRIC WITHIN FULL INDICATOR READING	
HOLES MUST BE KEPT FREE OF CHROME PLATING SOLUTION.	
ALL DIMENSIONS SHOWN TO BE MET AFTER CADMIUM PLATING. THICKNESS OF PLATE .0003 MIN TO .0005 MAX. MIN THICKNESS TO BE .0002 ON THREADED AREAS. NO ALLOWANCES FOR PLATING IN HOLES	
125√ SURFACE ROUGHNESS INCLUDING REAMED HOLES PER MIL-STD-10	
200√ FOR ALL DRILLED HOLES	
REMOVE ALL BURRS. BREAK ALL EDGES .015-.031	
INSPECTION INFORMATION MINIMUM PERMISSIBLE AVERAGE EDGE DISTANCE MARKED IS 1 1/2 FASTENER DIA FROM FASTENER ℄	✓
SYMBOL √ DENOTES SURFACE TO BE MACHINED	
UNLESS OTHERWISE SPECIFIED TOLERANCE ON FLANGES IS ± 1/32	
LENGTHS OF AN, NAS & MS AL ALY RIVETS SHORTER THAN 1 INCH ARE NOT SPECIFIED	✓
TOLERANCE ON LOFTED DELINEATIONS IS	

	GRUMMAN AIRCRAFT ENGRG CORP. BETHPAGE, L. I., NEW YORK		
LEM	SIZE D	CODE IDENT NO. 26512	LDW280-52267
MODEL OR END ITEM	SCALE FULL		SHEET 3.00

LDW280-52267

01 NAS 9-1100

ENG 32.1 REV 3-65

GRUMMAN AIRCRAFT ENGINEERING CORP.
CODE IDENT NO. 26512
ENGINEERING ORDER

DWG. NO. LDW280-52267
EO NO. A1
CONTROL INFO NO. LDW280B1295

IN MOD. BLOCK FOR -1 & -2.

N/A LDW280-55012 THRU LDW280-65012 SHOULD BE LDW280-54012

FOR LM-5(35) THRU LM-15(45).

DETAIL SPEC REQ	☐	CL II ENGRG CHG	✓	CL I ENGRG CHG	☐

REASON FOR EO: DRAWING CORRECTION

DESCRIPTION OF EO: ON -1 & -2: N/A LDW280-55012 THRU LDW280-65012 S/B LDW280-54012, LM-5 THRU LM-15 EFF.

GAEC EO RELEASE: JK 2/1/68

(5)

MODEL	EFFECTIVITY PROCURING ACTIVITY NO.	GAEC UNIT NO.	SUB CONTR UNIT NO.
LM		NOT REQ'D	

DRAWING CHANGE REQD: REVISE DWG ✓ RECORD EO

DISPOSITION OF PARTS: REWORK SCRAP — NOT REQ'D

		SUPPORT	RELIAB. GROUP	GROUP LEADER	STRESS GROUP	LIAISON ENGRG	PROJ ENGRG	
APPROVED BY				—	BW			
DATE	1/20/68			—	1-22		1/20/68	2-1-68
	VDI							

PRIORITY: E

DRAWING TITLE: BRACKET INSTALLATION – AL. W/S, MN. PROP. ULLAGE PRESS. XDUCER

DRAWING NO. LDW280-52267

EO NO. A1

ISSUED BY F. BADE X7033 SECTION VEH. DES. INT. GROUP NO. 335 PL 25

01

NAS 9-1100

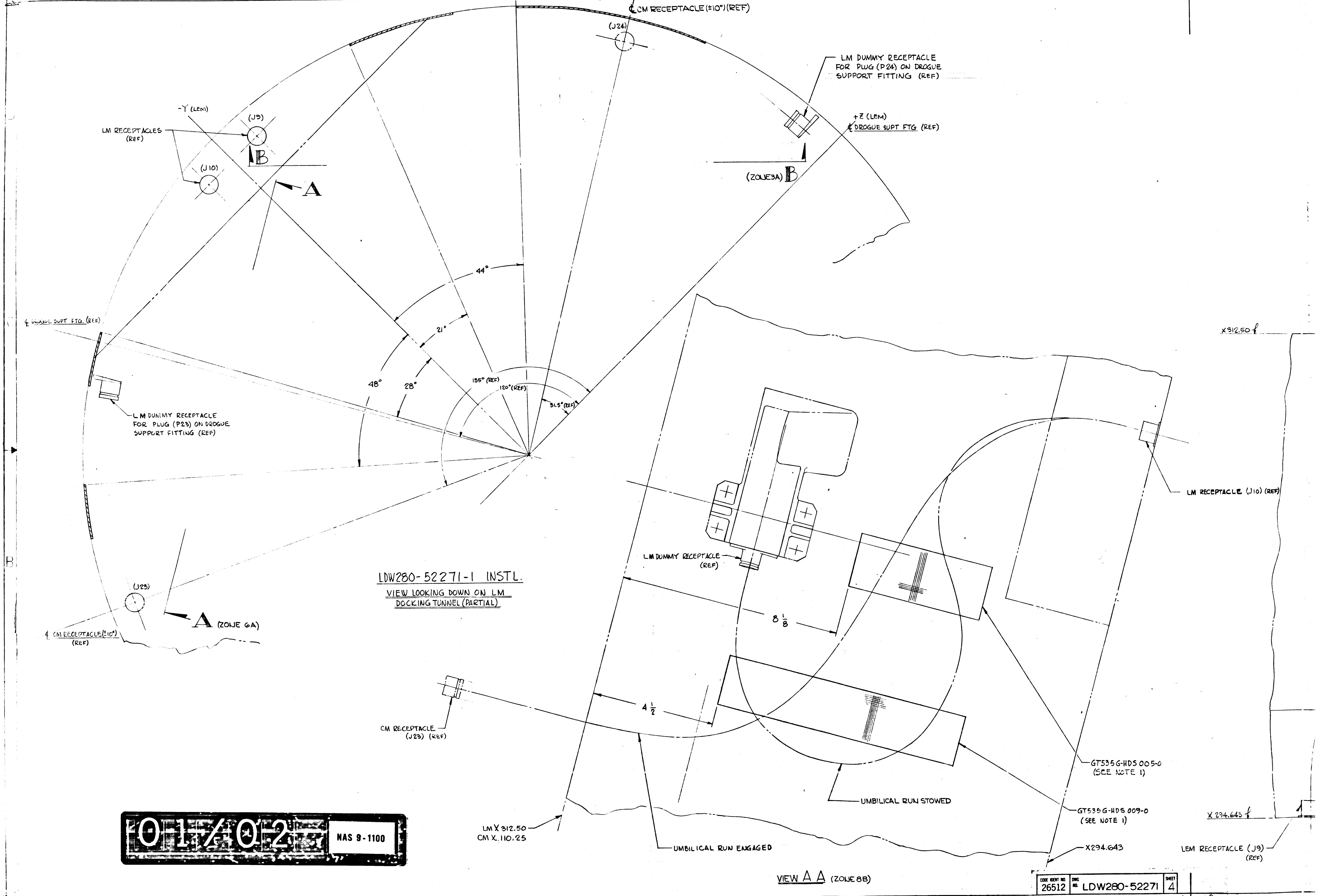

16
15
14
13
℄ CM RECEPTACLE (±10°) (REF)
(J24)
LM DUMMY RECEPTACLE
FOR PLUG (P24) ON DROGUE
SUPPORT FITTING (REF)
+Z (LEM)
℄ DROGUE SUPT FTG (REF)
(ZONE 3A) B
-Y (LEM)
(J9)
LM RECEPTACLES (REF)
B
(J10)
A
44°
21°
48°
28°
135° (REF)
120° (REF)
31.5° (REF)
℄ DROGUE SUPT FTG. (REF)
LM DUMMY RECEPTACLE
FOR PLUG (P23) ON DROGUE
SUPPORT FITTING (REF)
(J23)
A (ZONE 6A)
℄ CM RECEPTACLE (±10°) (REF)
LDW280-52271-1 INSTL.
VIEW LOOKING DOWN ON LM
DOCKING TUNNEL (PARTIAL)
X312.50 ℄
LM RECEPTACLE (J10) (REF)
LM DUMMY RECEPTACLE (REF)
8 1/8
4 1/2
CM RECEPTACLE (J23) (REF)
GT535G-HDS 005-0
(SEE NOTE 1)
UMBILICAL RUN STOWED
GT535G-HDS 009-0
(SEE NOTE 1)
X 294.643 ℄
LM X 312.50
CM X 110.25
UMBILICAL RUN ENGAGED
X294.643
LEM RECEPTACLE (J9) (REF)
VIEW A A (ZONE 8B)

01/02 NAS 9-1100

CODE IDENT NO.	DWG NO.	SHEET
26512	LDW280-52271	4

FRAME 1 | FRAME 2

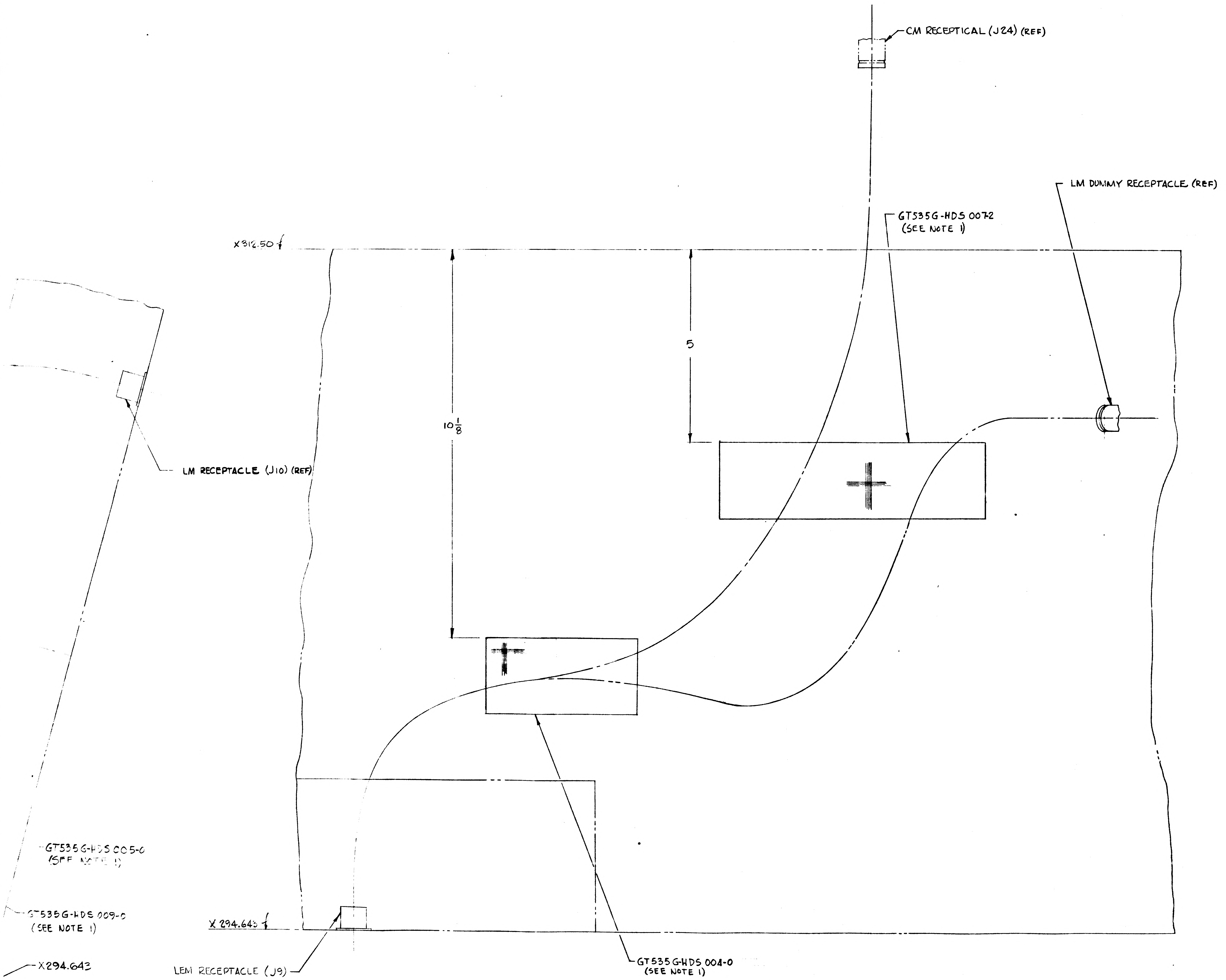
CM RECEPTICAL (J24) (REF)
LM DUMMY RECEPTACLE (REF)
GT535G-HDS 0072
(SEE NOTE 1)
X312.50
5
10 1/8
LM RECEPTACLE (J10) (REF)
GT535G-HDS 005-0
(SEE NOTE 1)
GT535G-HDS 009-0
(SEE NOTE 1)
X294.643
X 294.643
LEM RECEPTACLE (J9)
(REF)
GT535G-HDS 004-0
(SEE NOTE 1)

VIEW **B-B** (ZONE 6D)

02/02 NAS 9-1100

512 DWG NO. LDW280-52271 SHEET 4

FRAME ← | FRAME 2 →

GRUMMAN AIRCRAFT ENGRG CORP. BETHPAGE, L. I., NEW YORK

SIZE	CODE IDENT NO.		
J	26512	LDW280-52271	A
SCALE FULL		SHEET 4.00	

LDW280-52271A

LDW280-52271A

PRINT TRIM LINE

DWG SIZE X

PRINTING INFO ONLY

FULL SIZE SHEET AREA (36X96) 24 SQ FT

¼ SIZE SHEET AREA (¼ OF FULL) 6 SQ FT

2 R

LDW280-52271 B

LFM

MODEL OR END ITEM	NEXT ASSY	MODULE OR SER NO.	REQD PER MODULE OR END ITEM
LM	LDW280-59358	LM-9 (39)	1
LM	LDW280-54358	LM-8 (38)	1
LM	LDW280-54358	LM-7 (37)	1
LM	LDW280-54358	LM-6 (36)	1
PART NO. LDW280-52271-3-1		GAEC SCH NO.	

MODEL OR END ITEM	NEXT ASSY	MODULE OR SER NO.	REQD PER MODULE OR END ITEM
LM	LDW280-54358	LM-5 (35)	1
LFM # 224	LDW280-54358	LM-4 (34)	1
LFM # 224	LDW280-53358	LM-3 (33)	1
PART NO. LDW280-52271-3		GAEC SCH NO.	

MODEL OR END ITEM	NEXT ASSY	MODULE OR SER NO.	REQD PER MODULE OR END ITEM
LM	LDW280-52002	LM-2 (32)	1
PART NO. LDW280-52271-1		GAEC SCH NO.	

WORK PKG FUNCTION NO. 110 (5)

SH REV STATUS: FOR DESCRIPTION OF REV SEE SUBQ SH

SHEET	1.00	1.10	1.11	2.00		3.00	4.00		
REV	B	B	B	B		B	A		
SHEET									
REV									
SHEET									
REV									

LAST SECT LTR USED		GRUMMAN REL INFO B	
LAST DASH NO. USED	-3-1	PRIM NO. 215	JK(001) [illegible]

UNLESS OTHERWISE SPECIFIED DIMENSIONS ARE IN INCHES.
TOLERANCE UNLESS SPECIFIED
FRACTIONS - DECIMALS - ANGLES
± 1/32 ± .020 ± 1/2°

ORIG DWG AUTH

DETAIL SPEC REQUIREMENT	
CLASS II ENGRG CHANGE	
CLASS I ENGRG CHANGE	✓

LCD 3123, CCA 1175

CONTRACT NO. NAS9-1100
LINE ITEM
DOCUMENTATION TYPE II

DRAWN BY	VALENTINE 7-18-66	RELIABILITY	
LAYOUT BY	VALENTINE 7-18-66		
CHECKED BY	8-1-68		
GR LEADER	JJF/RVP		
VEH DESINT	PAULSRUD 8-5-66		
STRUCTURES	F. BUNCE 8-8-66	PROJ ENGR	R.M. CARBEE 8-8-66
STRUCTURES	HILDERMAN 8-8-66	REL GROUP	J. TAG 11-17-67
WEIGHT			

GRUMMAN AIRCRAFT ENGRG CORP
BETHPAGE, L. I., NEW YORK

SUPPORT INSTL
ASCENT STAGE-MID SECT DOCKING
TUNNEL LM/CM UMBILICAL

SIZE	CODE IDENT NO.		
B	26512	LDW280-52271	B

SCALE FULL NONE
SHEET 1.00 OF 6

ENG 77.1 12-65

SUPERSEDES LDW280-52271 NO CHG 7-18-66.

01

NAS 9-1100

REVISIONS

FOR CONTINUATION OF REVISIONS SEE SHEET 1.11

CHANGE LTR	ITEM NO.	SHEET NO.	ZONE	GRUMMAN INFO ONLY	DET SPEC	CLASS I	CLASS II	ENGRG ORDER	DESCRIPTION	EFFECTIVITY	DISPOSITION OF EXISTING PARTS REWORK	DISPOSITION OF EXISTING PARTS SCRAP	CHANGED BY AND DATE	ENGRG APPD	GOVT APPD
		RETRACED N/C LAST REV N/C ADDED SHEET 1.10, 2.00, 3.00, 4.00 ARTIE STERNBERG 7-31-68													
A	1	1.10 3.00						EO A1	NOTE #1 ADDED: PAINT NEEDNOT BE REMOVED FROM AREA TO BE BONDED.	LM-2 THRU LM-15	✓		ARTIE STERNBERG 7-31-68		
	2	1.00, 1.10 2.00 3.00				✓		EO A2 LCD1758 CCA 620	DELETED -1, NOTE 1 & SECTIONS A-A, B-B ADDED -3; SECTIONS C-C, D-D, E-E & F-F; NOTES 2 & 3	LM-3 THRU LM-15					
	3	1.10 3.00				✓		EO A3 LCD1758	ON -3 6 1/2 DIM WAS 5 3/4, 33.00 DIA (REF) WAS 33.50 DIA REF.	LM-3 THRU LM-15					
	4	1.10 2.00 3.00				✓		LCD 3123 CCA 1175 PKG 1	REMOVED LDW280-52903-1 (10) & ASSOCIATED DIMENSIONS ADDED LDW280-12107-1 (11) & LDW280-12107-15 & ASSOCIATED DIMENSIONS. (ON -3)	LM-3 THRU LM-15					
B	1			LFM 224 N/M		✓		EO B1, CCA1175 LCD 3123	CANCELLED BY EO B2	LM-3 THRU LM-15	✓		WM. BLAU 12-3-69		
	2			LFM 224 NM		✓		EO B2, CCA 1175 LCD 3123	CANCELLED EO B1						
	3	2.00 3.00	6A 7A	LFM 224		✓		EO B3 LCD 3123 CCA1175	ON-3: ADDED LDW280-12107-3(2), LDW280-12112-5 (4), GT535AE-8A/R, GN512CF-06C(2), GB510F-06-6(2) AND REMOVED GB510F-06-3(2), GN512CF-06(2) REVISED SECTIONS C-C AND D-D ADDED NOTES 7, 8, & 9	LM-3 & LM-4 LM-5 THRU LM-15	✓				
	4	2.00 3.00	6A 7A	LFM 224 NM LB		✓		EO B4 LCD 3123 CCA 1175	ON-3: ADDED LDW280-12107-3(2), LDW280-12112-5 (4), GT835P-4 A/R, AN960 D6(4), GB510F-06-6(4) AND REMOVED GB510F-06-3 (4) REVISED SECTIONS C-C AND D-D, ADDED NOTES 7, 8, & 9. WAS: ON-3: ADDED LDW 280-12107-3(2), LDW280-12112-5(4), GT835AE-8 A/R, GN512CF-06C(2), GB510F-06-6(2), AND REMOVED GB510F-06-3(2), GN512CF-06(2) REVISED SECTIONS C-C, AND D-D, ADDED NOTES 7, 8, & 9. (REF EO B3)	LM-3 & LM-4 LM-5 THRU LM-15	✓				
	5	2.00 3.00	5C	LFM K137 LFM K106 LFM K100 NM LB		✓		EO B5 LCD 11275 ECP A102	IN F/D & B/M FOR -3 INSTL V28-420111 WAS V28-420107 V28-420112 WAS V28-420108	LM-3 LM-4 LM-5	✓		ES		

CHG APPROVED

LTR	GROUP LDR	VEH DES/LT	STRUCTURES	STRUCTURES	WEIGHT	PROJECT
A	FDR/[illegible] 8/5/68	[illegible] 8/6/68	—	[illegible] 8/1/68	—	JAP 8/7/68
r						

ENG 77.16 3-66

GRUMMAN AIRCRAFT ENGRG CORP., BETHPAGE, L. I., NEW YORK

SIZE	CODE IDENT NO.		
B	26512	LDW280-52271	B

SCALE NONE

SHEET 1.10

01

NAS 9-1100

REVISIONS

FOR CONTINUATION OF REVISIONS SEE SHEET ______

CHANGE LTR	ITEM NO.	SHEET NO.	ZONE	GRUMMAN INFO ONLY	DET SPEC	CLASS I	CLASS II	ENGRG ORDER	DESCRIPTION	EFFECTIVITY	DISPOSITION OF EXISTING PARTS		CHANGED BY AND DATE	ENGRG APPD	GOVT APPD
											REWORK	SCRAP			
B	6	1.00, 1.11 2.00 3.00	1C 4D	NM LB		✓		EO B6 LCD 3727	1) IN F/D ADDED NOTE 10. 2) CREATED -3-1, N/A LDW280-54358 (1) EFF LM6 - 15. RESTRICTED EFF OF -3 TO LM 3-5 BY REMOVING LM6-15 ADDED SH 1.11	LM-6 THRU LM-15	NOT	REQD	W. BLAU 12-3-69		
	7	2.00 3.00	5B 6B	NM LB		✓		EO B7 LCD 11275 ECP A 102	ON -3-1, REPLACED V28-420107 & V28-420108 WITH V28-420111 & V28-420112 RESP.	LM-6 THRU LM-15	✓				
	8	1.00		NM LB		✓		LEO 280-1471 LCD 3587A	REMOVED LM-15 EFFECTIVITY ON DASH NO. -3-1 E.S.	LM-15		-3-1			
	9	1.00		NM LB		✓		EO B9 LCD 3994	IN MOD BLK FOR -3-1 EFF, LM-6 THRU LM-9 WAS LM-6 THRU LM-14	LM-10 THRU LM-14		-3-1			
	10			M Ⓡ LB		✓		LCD 3727	REF EOB6: CREATED -3-1 N/A LDW280-54358 EFF LM-6 THRU LM-15 SHOULD BE N/A LDW280-54358 EFF LM-6, LM-7 & LM-8 & N/A LDW280-59358 EFF LM-9 THRU LM-15 D.F. Ladlaw F2	LM-6 THRU LM-15	NOT	REQD			

CHG APPROVED

LTR	GROUP LDR	VEH DES INT	STRUCTURES	STRUCTURES	WEIGHT
B	DK 2/16/70	2-16-70		CW 2-16-70	

GRUMMAN AIRCRAFT ENGRG CORP., BETHPAGE, L. I., NEW YORK

SIZE	CODE IDENT NO.		
B	26512	LDW280-52271	B

Ⓑ

SCALE NONE

SHEET 1.11

ENG 77.16 3-66

01

NAS 9-1100

				-3-1	-3	-1	CODE IDENT	PART NO.	I&T	NOMENCLATURE OR DESCRIPTION	MATERIAL	GOVT SPEC	COML SPEC	STOCK SIZE	PROCESS SYM	FINISH NO.	ZONE
				1	1			V28-420112	E	UMBILICAL	GFE - NAR						5B
				1	1			V28-420111	E	UMBILICAL	GFE - NAR						6B
				4	4			GB510F-06-6	E	BOLT	GRUMMAN STD						7C/6C
				2	2			MS28775-021	E	"O" RING	STD PART						6C
				2	2			MS16624-1025		RING RETAINING	STD PART						6A
				4	4			MS21042-06		NUT	STD PART						7C
				A/R	A/R			GT835P-4		TAPE	GRUMMAN STD						6B
				4	4			GN512CF-06C		NUT	GRUMMAN STD						6C
				4	4			GB510F-06-3		BOLT	GRUMMAN STD						7C/6C
				2	2			AN960C416L		WASHER	STD PART						6A
				4	4			AN960D6		WASHER	STD PART						6B
				2	2			LDW280P11933-11		RECEPTICAL	SEE DWG						6A
				2	2			LDW280P11936-13		COVER							6B
				2	2			LDW280M11373-11		STUD							6A
				2	2			LDW280M11371-11		MOUNT							6A
				4	4			LDW280-12112-5		STRAP							
				11	11			LDW280-12107-15		VELCRO HOOK							5B
				2	2			LDW280-12107-3		SUPPORT ASSY	SEE DWG						6A
				11	11			LDW280-12107-1		SUPPORT ASSY	SEE DWG						5C
						1		GT535G-HDS009-0		TAPE FASTENER	GRUMMAN STD						
						1		007-0									
						1		005-0									
						1		GT535G-HDS004-0		TAPE FASTENER	GRUMMAN STD						
								LDW280-52271-3-1		SUPPORT INSTL					NONE	NONE	7B
								LDW280-52271-3		SUPPORT INSTL					NONE	NONE	7B
								LDW280-52271-1	E	SUPPORT INSTL					NONE	NONE	

QTY PER ASSEMBLY

SYM OR NO.	PROCESS OR FINISH	GRUMMAN SPEC OR MILITARY SPEC	SYM OR NO.	PROCESS OR FINISH	GRUMMAN SPEC OR MILITARY SPEC	SYM OR NO.	PROCESS OR FINISH	GRUMMAN SPEC OR MILITARY SPEC

I & T: IDENTIFICATION AND TRACEABILITY IN ACCORDANCE WITH : NONE

GRUMMAN AIRCRAFT ENGRG CORP, BETHPAGE, L. I., NEW YORK

SIZE	CODE IDENT NO.		
B	26512	LDW280-52271	B

SCALE NONE

SHEET 2.00

ENG 77.2 7-66

01

NAS 9-1100

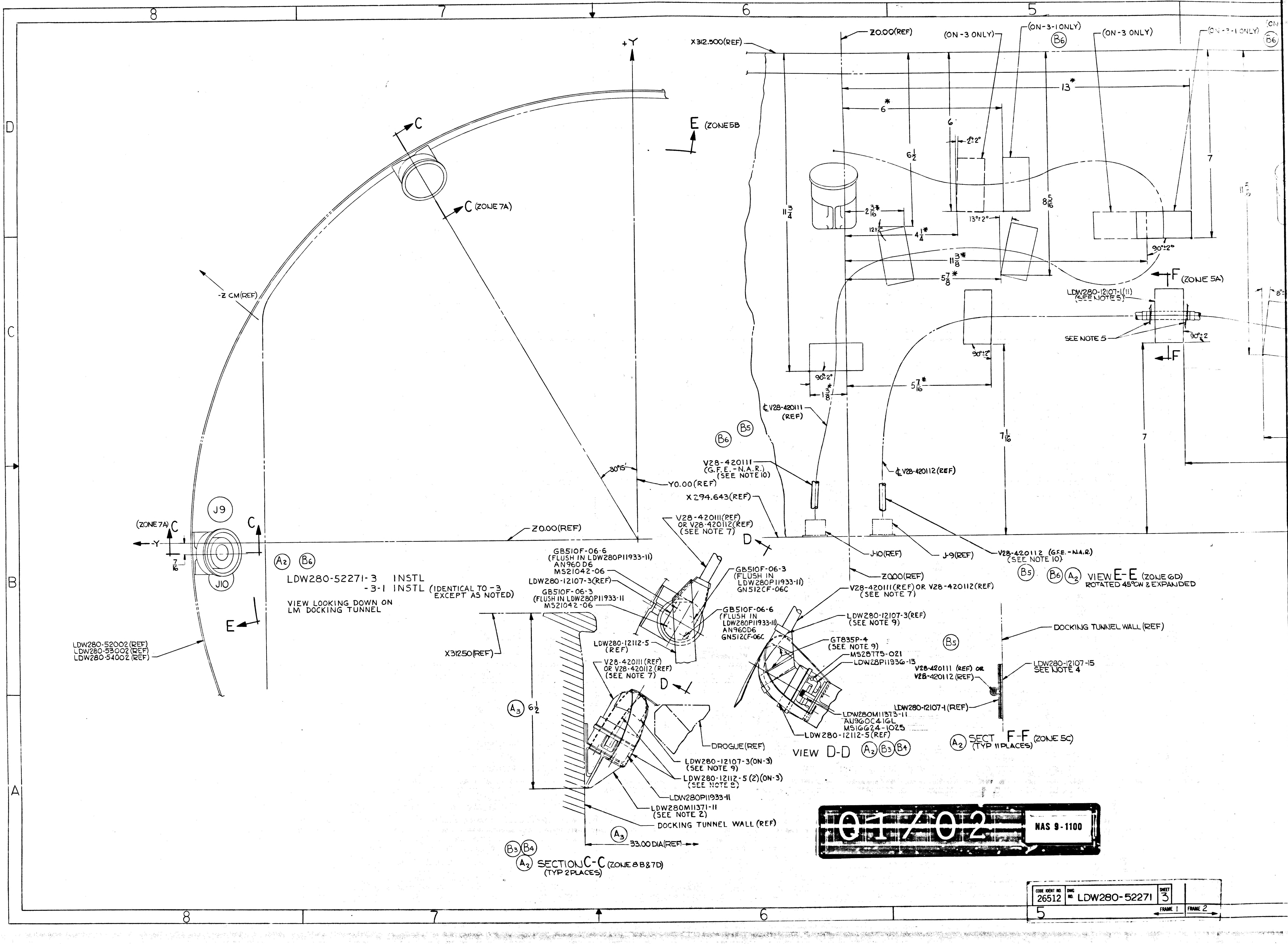

8
7
6
5
D
C
B
A
+Y
C
C (ZONE 7A)
E (ZONE 5B)
-Z CM(REF)
30°15'
Y0.00(REF)
Z0.00(REF)
(ZONE 7A) C
C
-Y
J9
J10
7/16
E
LDW280-52002(REF)
LDW280-53002(REF)
LDW280-54002(REF)
X312.500(REF)
Z0.00(REF)
(ON-3 ONLY)
(ON-3-1 ONLY)
(ON-3 ONLY)
(ON-3-1 ONLY)
B6
13*
6*
6
2°±2°
6 1/2
7
11 3/4
2 3/16*
12°±2°
4 1/4*
13°±2°
8 5/16
90°±2°
11 3/8*
5 7/8*
F (ZONE 5A)
LDW280-12107-1(11) (SEE NOTE 5)
SEE NOTE 5
30°±2
F
90°±2°
90°±2°
1 3/8*
5 7/16*
7 1/16
7
℄ V28-420111 (REF)
B5
B6
V28-420111 (G.F.E.-N.A.R.) (SEE NOTE 10)
℄ V28-420112(REF)
X294.643(REF)
D
J-10(REF)
J-9(REF)
V28-420112 (G.F.E.-N.A.R) (SEE NOTE 10)
Z0.00(REF)
B5 B6 A2 VIEW E-E (ZONE 6D) ROTATED 45°CW & EXPANDED
A2 B6
LDW280-52271-3 INSTL
-3-1 INSTL (IDENTICAL TO -3 EXCEPT AS NOTED)
VIEW LOOKING DOWN ON LM DOCKING TUNNEL
V28-420111(REF) OR V28-420112(REF) (SEE NOTE 7)
GB510F-06-6 (FLUSH IN LDW280P11933-11)
AN960D6
MS21042-06
LDW280-12107-3(REF)
GB510F-06-3 (FLUSH IN LDW280P11933-11
MS21042-06
GB510F-06-3 (FLUSH IN LDW280P11933-11) GN512CF-06C
GB510F-06-6 (FLUSH IN LDW280P11933-11) AN960D6 GN512CF-06C
LDW280-12112-5 (REF)
X31250(REF)
V28-420111(REF) OR V28-420112(REF) (SEE NOTE 7)
LDW280-12107-3(REF) (SEE NOTE 9)
GT835P-4 (SEE NOTE 9)
MS28775-021
LDW28P11936-13
B5
DOCKING TUNNEL WALL (REF)
V28-420111 (REF) OR V28-420112 (REF)
LDW280-12107-15 SEE NOTE 4
LDW280-12107-1 (REF)
LDW280M11373-11
AN960C416L
MS16624-1025
LDW280-12112-5(REF)
D
A3 6 1/2
DROGUE(REF)
VIEW D-D A2 B3 B4
A2 SECT F-F (ZONE 5C) (TYP 11 PLACES)
LDW280-12107-3(ON-3) (SEE NOTE 9)
LDW280-12112-5 (2)(ON-3) (SEE NOTE 8)
LDW280P11933-11
LDW280M11371-11 (SEE NOTE 2)
DOCKING TUNNEL WALL (REF)
A3
33.00 DIA(REF)
B3 B4
A2 SECTION C-C (ZONE 8 B & 7D) (TYP 2 PLACES)
FRAME 1
FRAME 2

01/02 NAS 9-1100

CODE IDENT NO	DWG NO	SHEET
26512	LDW280-52271	3

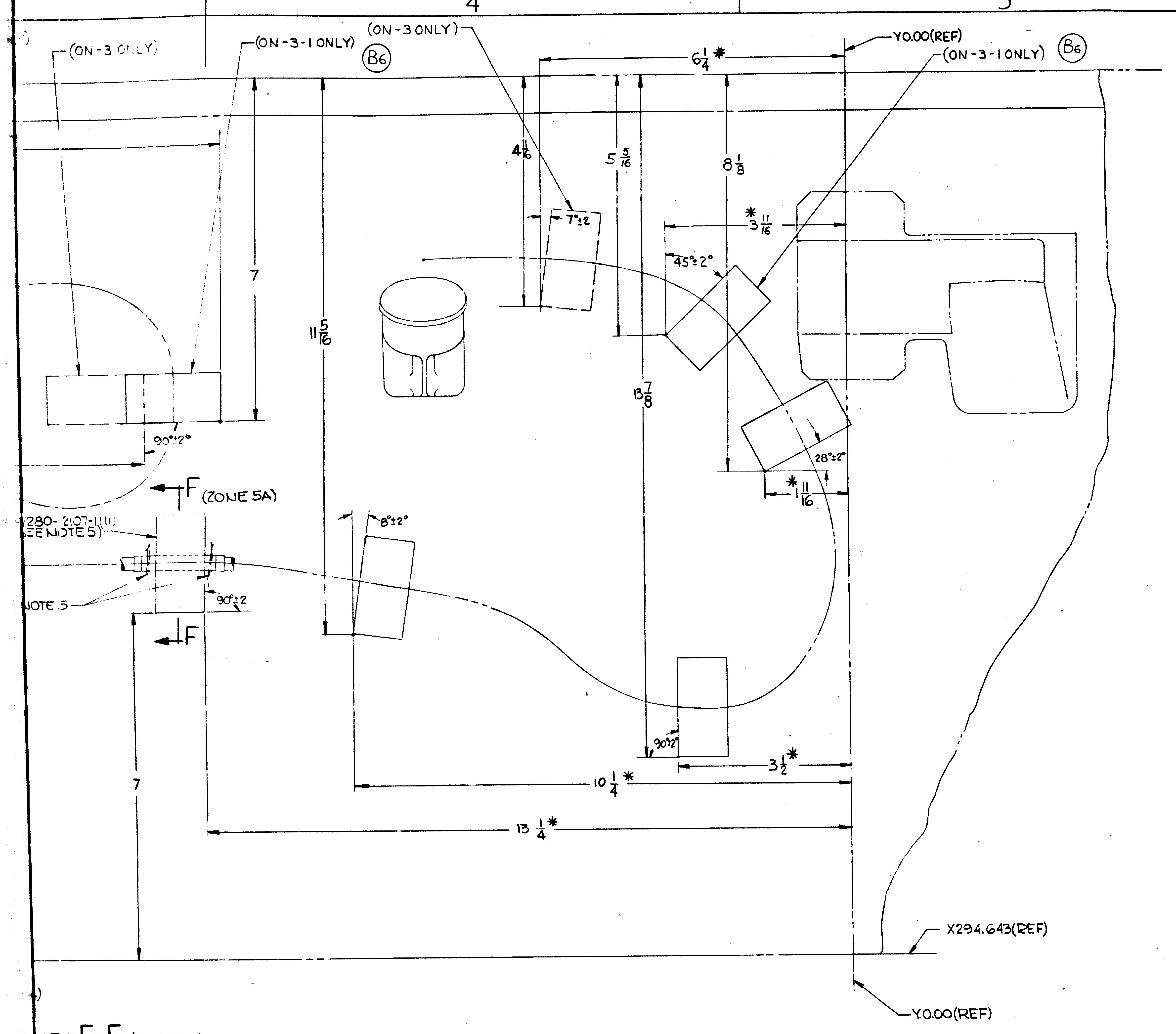

VIEW E-E (ZONE 6D)
ROTATED 45°CW & EXPANDED

TUNNEL WALL (REF)

SUPPLEMENTARY DATA UNLESS OTHERWISE SPECIFIED NOTES CHECKED ✓ APPLY TO THIS DWG.	
MARK PART NUMBER IN ACCORDANCE WITH MIL-STD-130.	
PART NUMBER AND ALL OTHER MARKINGS IN REGION MARKED ☒ USE BOTH SIDES IF NECESSARY.	
LENGTHS OF AN, NAS & MS AL ALY RIVETS SHORTER THAN 1 INCH ARE NOT SPECIFIED.	
INSTALL RIVETS IN ACCORDANCE WITH	

NOTES:

1. BOND TAPE TO TUNNEL WALL WITH RTV 731 PER LSP14-22601. (PAINT NEED NOT TO BE REMOVED FROM AREA TO BE BONDED (FOR LM-2(32) ONLY)
2. BOND LDW280M11371-11 TO TUNNEL WALL PER LSP-14-22500 CURE RANGE II
3. DIMENSIONS MARKED * ARE MEASURED ALONG THE CONTOUR
4. BOND LDW280-12107-15 11 PLACES TO TUNNEL WALL SEE SECT C-C & VIEW E-E) USING EPON 934 PER LSP14-22500 CURE RANGE I (ROOM TEMP. CURE PERMITTED.) THICKNESS REQUIREMENTS (OF ADHESIVE) WAIVED IN AREAS WHERE LDW280-12107-15 SITS OVER PROTRUDING HEAD OF RIVETS. EXCESS ADHESIVE SQUEEZED OUT SHALL BE REMOVED.
5. LDW280-12107-1 TO BE TIED TO V28-420107 (GFE NAR UMBILICAL 10PLACES) AND TO V28-420108 (GFE NAR) UMBILICAL 12 PLACES USING GT835AM-1 TIE CORD IN ACCORDANCE WITH LSP14-13313 PARA. 3.5.2 (a) THRU 3.5.2(d) AS SHOWN.
6. TOLERANCE FOR DIMENSIONS LOCATING LDW280-12107-1 & -15 (SEE VIEW E-E) IS ±1/8 INCH.
7. BEFORE INSERTING CONNECTOR INTO STOWED POSITION MOUNT, CONFIRM THAT THE AIR-LOCK ADAPTER ON THE UMBILICAL IS IN THE OPEN POSITION. THIS WILL ENABLE THE THREE FINGERS OF THE MOUNT TO PROPERLY ENGAGE THE CONNECTOR.
8. INSTALL LDW280-12112-5 STRAP (2) WITH VELCRO PILE ON SAME SIDE AS MS21042 AND/OR GN512CF NUT.
9. TAPE LDW280-12107-3 ASSY (2) TO CONNECTOR, AS SHOWN, USING GT835P-4. EACH END OF LDW280-12107-3 TO BE SECURED WITH ONE LENGTH OF TAPE; APPLY ONE REVOLUTION OF TAPE BEFORE INSERTING LDW280-12107-3, AND SECURE PART TO CONNECTOR UTILIZING A MINIMUM OF FOUR COMPLETE REVOLUTIONS OF TAPE AT EACH END.
10. CABLE IDENTIFICATION SLEEVING TO BE LOCATED ON CABLE SO AS NOT TO BE IN AREA OF VELCRO PADS OR ANY SHARP BENDS.
11. THIS DWG AFFECTED BY THE FOLLOWING LFMS SEE LFM FOR EFFECTIVITY AND MODIFICATION. LFM K137, LFM K106, LFM K100.

02/02 NAS 9-1100

GRUMMAN AIRCRAFT ENGRG CORP. BETHPAGE, L. I., NEW YORK

SIZE	CODE IDENT NO.		
J	26512	LDW280-52271	B
SCALE FULL		SHEET 3.00	

LDW280-52271 B

LDW280-52271 B

280-52271 SHEET 3

FRAME 1 FRAME 2

2FR

ENG 32.1 REV 3-65

GRUMMAN AEROSPACE CORPORATION

CODE IDENT NO. 26512

ENGINEERING ORDER

DWG. NO. LDW280-52271 | EO NO. C1

CONTROL INFO NO. LM-S-23599

(REF EO B9)

ADD REWORK INFO: FOR REMOVAL OF VELCRO TAPE PENDING REPLACEMENT INSTL LDW280-60102, IT IS NOT NECESSARY TO REMOVE EPON 934 EXCEPT THAT WHICH IS LOOSE OR EASILY REMOVABLE & BRUSH ALODINE ANY BARE METAL. THERE IS NO REPAINT REQMT.

NOTE: FOR EPON THAT IS LEFT IN PLACE, BE SURE TO SAND OR REMOVE ANY SHARP OR ROUGH EDGES TO PREVENT ANY THERMAL BLANKET TEARS. (OF COURSE, ANY EPON THAT INTERFERES WITH ANY SUBSEQUENT INSTL IS TO BE REMOVED AS REQD.)

DETAIL SPEC REQ ☐ CL II ENGRG CHG ☐ CL I ENGRG CHG ☒ LCD 3994

REASON FOR EO: REWORK INFO REQMT. (DIRR L7694 FOR LM-10)

DESCRIPTION OF EO: (REF EO B9) ADDED REWORK INFO.

GAEC EO RELEASE: W.R.H. 1-7-71

MODEL	PROCURING ACTIVITY NO.	GAEC UNIT NO.	SUB CONTR UNIT NO.
LM		LM-10 (40)	
		THRU	
		LM-13 (43)	

EFFECTIVITY: NM

DRAWING CHANGE REQD: REVISE DWG ☒ RECORD EO ☐

DISPOSITION OF PARTS: REWORK ☐ SCRAP ☒

APPROVED BY DATE 12/7/70

[illegible] 12/10/70			JW 1/7/71	KC 12/8/70	ALW 12/7/10	[illegible] 1-7-71	Both 12-19-70
MATLS		RELIAB. GROUP	GROUP LEADER	STRESS GROUP	LIAISON ENGRG	PROJ ENGRG	

PRIORITY: C

DRAWING TITLE: SUPPORT INSTL ~ A/S ~ M/S DOCKING TUNNEL ~ UMBILICAL

DRAWING NO. LDW280-52271

EO NO. C1

ISSUED BY LIAISON A. WILSON X86755 SECTION VDI GROUP NO. 0335 PL 25

01

NAS 9-1100

REVISIONS FOR CONTINUATION OF REVISIONS SEE SHEET 1.11

CHANGE LTR	ITEM NO.	SHEET NO.	ZONE	GRUMMAN INFO ONLY	DET SPEC	CLASS I	CLASS II	ENGRG ORDER	DESCRIPTION	EFFECTIVITY	DISPOSITION OF EXISTING PARTS		CHANGED BY AND DATE	ENGRG APPD	GOVT APPD
											REWORK	SCRAP			
A	1	1.00, 1.10, 1.11, 2.00, 2.01, 2.02, 2.03, 2.04, 3.00, 3.01, 4.00, 5.00	5B 6A 7A 8A 10A 12B 14A 24B					EO A1	SHEET 1.00 OF 12 WAS SHEET 1.00 OF 10 ADDED SHEET 1.10 ON-1 INSTL L/H DELETED -1125 ASF-4 & ADDED LSC269-224-4, GC12H-4 (4), GC12H-20(4), GB511J-08-2(4) AN960D8L(8), MS21042L08 (4), -1416 ASF-4 & -1395 ASF-4 AS SHOWN. R/H DELETED -1126 ASO-4 & ADDED LSC 269-224-4, -1394 ASO-4, -1417 ASO-4, GC12H-20(4), GB511J-08-2, AN960D8L(8), MS21042 L08 (4), DETAILS D & E	LM-2	✓		C. BAIS 1-20-67		
	2							LE0280-314	ON SH 3.01 ADDED NOTE 13.		NOT	REQD			
	3		3A 5A 18A 19B 20B					EO A3	ON SH 5.00 REMOVED LSC269-224-8 (REF) ADDED LSC269-113-8 ADDED LDW280P11598-15, GB511J-08-3 (2), AN960D8L (2), DELETED -1196ASF-8 & ADDED -1482ASF-8. REVISED CALLOUT LSC269-224-8 WAS LSC269-224-8(2). ON SH 4.00 REVISED COORDINATE, X 199.226 (REF) WAS X 198.85, ADDED SECTION C-C		✓				
	4		3A 15A					EO A4	TO-1 AND B/M REMOVED AN737TW22(2), ADDED AN735 D5 (1) & AN735 D7 (1)						
	5		17A					EO A5	FOR -1 INSTL: LDW280P11598-11 WAS LDW280M11159-1						
	6		24C					EO A6	ON -1 LDW280-11534-14 WAS -13						
	7		11B 22A					EO A7	ON-1 INSTL IN F/D ZONE 21A SH 5.00 -1208ASO-4 S/B -1679 ASO-4. IN F/D ZONE 22B SH 4.00 NAS654V2 (8) S/B NAS654V9 (8)						
	8		9A 9B 10B					EO A8	ON-1 INSTL ADDED LDW280M11174-1 (2), GS134J-127 (2), NAS654V2 (8) S/B NAS654V9 (8), -1208 ASO-4 S/B -1679 ASO-4						
	9							EO A9	NOT APPLICABLE (EO NOT RELEASED)	NOT REQD	NOT	REQD	JG		

CHG APPROVED

LTR	GROUP LDR	VEH DES INT	STRUCTURES	STRUCTURES	WEIGHTS
B					

GRUMMAN AIRCRAFT ENGRG CORP., BETHPAGE, L. I., NEW YORK

SIZE	CODE IDENT NO.		
B	26512	LDW280-52350	D

SCALE NONE

SHEET 1.10

ENG 77.16 3-66

01

NAS 9-1100

REVISIONS FOR CONTINUATION OF REVISIONS SEE SHEET

CHANGE LTR	ITEM NO.	SHEET NO.	ZONE	GRUMMAN INFO ONLY	DET SPEC	CLASS I	CLASS II	ENGRG ORDER	DESCRIPTION	EFFECTIVITY	DISPOSITION OF EXISTING PARTS		CHANGED BY AND DATE	ENGRG APPD	~~GOVT~~ APPD
											REWORK	SCRAP			
A	10	1.00, 1.10, 1.11, 2.00, 2.01, 2.02, 2.03, 2.04, 3.00, 3.01, 4.00, 5.00						EO A10	ADDED SH 1.11, ON-1 IN FLD & B/M LDW270M10007-79(1)(FUEL) WAS LDW270M10007-1(2); ADDED LDW270M10015-81(1) (OX.)	LM-2	✓		C. BAIS 1-20-67		
B	1		9B					EO B1	REF EO A8 ON-1 INSTL NAS654V14(8) WAS NAS654V9(8)						
	2		13A					EO B2	REF EO A10 ON-1 REMOVED LDW270M10007(2). ADDED GP10M-89 (1) & GP10M-207 (1). ADDED NOTE 12.						
	3								REF EO A8 "NAS654V2 (8) S/B NAS654V9 (8)" & 1208A50-4 S/B 1679A50-4 NOT APPLICABLE PREVIOUSLY INCORPORATED ON EO A7	NOT REQD	NOT	REQD			2/14/67
	4		9B 22A						REF EO A7 "ZONE 21A" S/B ZONE 22A & "ZONE 22B" S/B ZONE 9B						
	5		3B 15B						ADDED LDW360-52251-5 & -6	LM-2	✓				
C	1	2.02 5	22C				✓	EO C1	ON-1 IN F/D & BM. DELETED -1291AFD-6, -1190AFD-6, -1319AFD-6, 1320AFD-6 AND ADDED -583, -590, -585, -586.	LM-2	✓		FARRELL/BIANCHI 10/18/67		
	2						✓	EO C2	CANCELLED E.O. A8	LM-2	NOT	REQD			
	3	2.02 5	21C				✓	EO C3	ON-1 IN F/D & BM LDW280P16212-1 (1) WAS (2) LDW280P16212-5 (1) WAS LDW280P16212-1	LM-2	✓				
	4	3.00			✓			LEO280-513	ON-1 ADDED NOTE 15.	LM-2	✓				
	5							EO C5	CANCELLED BY EO C9	LM-2	NOT	REQD			
	6	2.03 4	9B 10C				✓	EO C6	ON-1 IN F/D & BM DELETED GS570J-6C(1), GR18A-6G4G(1), GS570J-4C(1). ADDED "SEE LDW270-51010 FOR ENGINE CONNECTIONS.	LM-2	✓				

CHG APPROVED

LTR	GROUP LDR	VEH DES INT	STRUCTURES	STRUCTURES	WEIGHTS
B	—	J. Pusatere 2/8	2-2		

GRUMMAN AIRCRAFT ENGRG CORP., BETHPAGE, L. I., NEW YORK

SIZE	CODE IDENT NO.		
B	26512	LDW280-52350	D Ⓟ
SCALE NONE		SHEET 1.11	

ENG 77.16 3-66

01 /

NAS 9-1100

REVISIONS FOR CONTINUATION OF REVISIONS SEE SHEET ______

CHANGE LTR	ITEM NO.	SHEET NO.	ZONE	GRUMMAN INFO ONLY	DET SPEC	CLASS I	CLASS II	ENGRG ORDER	DESCRIPTION	EFFECTIVITY	DISPOSITION OF EXISTING PARTS REWORK	DISPOSITION OF EXISTING PARTS SCRAP	CHANGED BY AND DATE	ENGRG APPD	GOVT APPD
C	7	2.00 2.02 4	4B 7B 8B				✓	EOC7 LCD19-1134	ON-1 INF/D & BM DELETED -724ASF-12(REF), -609ASF-10 ADDED -1822ASF-10, -1823ASF-10, -1825ASF-12, -1824ASF-4, -1826ASF-12, LSC269-234-2 & LSC269-240-2 ZONE 4B SH 4. DELETED -724ASF-12 & ADDED -1825ASF-12(REF), -1826ASF-12(REF) -1824ASF4(REF)	LM2	✓		BIANCHI / FARRELL 10/18/67		
	8	2.04 3.00 4 5	9B 10B 18B 23B				✓	EOC8 LCD-1078	ON-1 INF/D & BM DELETED GS570J-6C(2). ADDED GS13AJ-506(2) SEE NOTE 17, SEE NOTE 18, SEE NOTE 19, LDW270-52206-7(REF) SEE NOTE 16. ADDED NOTES 16, 17, 18 & 19. REVISED NOTE 6. ADDED TORQUE SEQUENCE NUMBERS TO BOTTOM COVERS OF FUEL & OX TANKS		✓				
	9						✓	EOC9 LCD-1244	CANCELLED EO C5		NOT	REQD			
	10	3.00					✓	EOC10 LCD-1078 (R)	ADDED NOTE 14.		✓				
D	1							EOD1	CANCELLED BY EO D2		NOT	REQD			
	2						✓	EOD2 LCD1572	CANCELLED EO D1		✓				
	3	NOTED					✓	EOD3 LCD-1572 & LCD-1843	ON-1 INF/D & BM SH. 2.00, 2.01, 2.02, 2.03, 2.04, 3.00, 4 & 5 ZONES 2A, 3A, 3B, 4B, 8A, 9A, 9B, 10A, 10B, 11B, 13B, 14A, 14B, 16B, 21A, 21B, 21C, 22A, 22B, 22C & 23B ADDED -3002 THRU -3019, -1554, -1555, LSC269-224-4(16) -228-4(1) -226-4(5) -240-22(1), LDW280-52984-18-3, LDW270M10042-13(4) LDW270M10043-11(4) LDW270M10044-11(4) LDW270-52204, GS13AJ-115(1), GS13AJ-110(2), GB511J-08-7(16), GB511J-08-8(4), MS21043L08(20), AN960C8L(40) DELETED -583, -590, -585, -586, -1059, -1209, -636, -1056, -1210, -1679, -534, -535, LSC269-218-4(2) -200-4(4) -224-4(1) -234-25(1) -205-4(2), LDW270-52206-5, -51207-1, -52206-1, -52206-7, -52206-3, GS570J-6C(2), GR18A-6G4G(2) GS13AJ-506(2), GS570J-4C(2), AN815(2) REVISED NOTE 6 & 11.		✓				

CHG APPROVED

LTR	GROUP LDR									

GRUMMAN AIRCRAFT ENGRG CORP., BETHPAGE, L. I., NEW YORK

SIZE	CODE IDENT NO.			
B	26512	LDW280-52350	D	(D)
SCALE	NONE		SHEET 1.12	

ENG 77.18 3-66

01 /

NAS 9-1100

REVISIONS

FOR CONTINUATION OF REVISIONS SEE SHEET ______

CHANGE LTR	ITEM NO.	SHEET NO.	ZONE	GRUMMAN INFO ONLY	DET SPEC	CLASS I	CLASS II	ENGRG ORDER	DESCRIPTION	EFFECTIVITY	DISPOSITION OF EXISTING PARTS REWORK	DISPOSITION OF EXISTING PARTS SCRAP	CHANGED BY AND DATE	ENGRG APPD	GOVT APPD
D	4	2.02 3.00 4 5	3B 9A 21C				✓	EO D4 LCD1843	ON-1 IN F/D & BM DELETED LSC269-224-4(2) & CLAMP ADDED LSC269-226-4(2), REF DIMS $2\frac{1}{16}$ & $1\frac{5}{16}$, BONDING INFORMATION. RELOCATED LDW280-52984-3 ADDED TO NOTE 6 TORQUE INFO FOR GB511J-08-7(16) & GB511J-08-8(4)	LM-2	✓		BIANCHI / FARRELL 10/18/67		
	5	2.04 3.01 4	9B 10B				✓	EO D5 LCD1894	ON-1 IN F/D & BM ADDED NOTE 20. GS13AJ-127 S/B GS13AK-127 (SEE NOTE 20)		✓				
	6							EO D6 LCD 1894	CANCELLED BY EO D10		NOT	REQD			
	7	3.01				✓		LEO280-708 LCD1961	ON-1 ADDED NOTE 31.		NOT	REQD			
	8							EO D8	CANCELLED BY EO D10		NOT	REQD			
	9							EO D9	CANCELLED BY EO D10		NOT	REQD			
	10					✓		EO D10 LCD1894	CANCELLED EO D6, D8 & D9		✓				
	11	1.00 3.00		A		✓		LCD1894 C.D	DELETED -1 INSTL & CREATED -3 INSTL & -5 & -7 ASSY'S CANCELLED NOTE 9,12,16,17,19,20,21,22,23,24,4 & 7 ADDED NOTES 25 THRU 32		✓				
	12	1.00							ADDED SH 1.12, 1.13 & 2.05						

CHG APPROVED LTR	GROUP LDR	VDI	STRUCTURES
D	10/18/67	J. Prestien 10/18	10-18

GRUMMAN AIRCRAFT ENGRG CORP., BETHPAGE, L. I., NEW YORK

SIZE	CODE IDENT NO.		
B	26512	LDW280-52350	D

SCALE NONE

SHEET 1.13

ENG 77.16 3-66

01

NAS 9-1100

J								LDW280-16000		TUBE	SEE DWG						
↑								↑ -3012ASO-4		↑	↑						
						1		-3006 ASF-4	E								
						1		-1195AFD-6	↑								
						1		-3002AFD-6									
						1		-1193AFD-6									
						1		-3003 AFD-6									
						1		-1191AFD-6									
						1		-3004AFD-6									
						1		-1287AFD-6									
						1		-3005AFD-6									
						1		-1187AFD-6									
						1		-1288AFD-6									
						1		-1290ACD-4									
						1		-611ASF-4									
						1		-1822 ASF-10									
						1		-3007 ASF-4									
						1		-3008ASF-4									
				1				-496ASO-20									
						1		-1140ASF-4									
						1		-1417ASO-4									
						1		-1395 ASF-4									
						1		-1289ACD-4									
						1		-3010ASF-4									
						1		-1482ASF-8									
						1		-3011 ASO-4									
↓						1		↓ -1416 ASF-4		↓	↓						
J						1		LDW280-16000		TUBE	SEE DWG						
J						1		LDW280-52350-7		OXTANK LINE ASSY	(WELDED)				W		
J						1		LDW280-52350-5	↓	FUEL TANK LINE ASSY	(WELDED)				W		
G								LDW280-52350-3	E	LINES INSTL							
CL				-7	-5	-3	CODE IDENT	PART NO.	I&T	NOMENCLATURE OR DESCRIPTION	MATERIAL	GOVT SPEC	COML SPEC	STOCK SIZE	PROCESS SYM	FINISH NO.	ZONE
QTY PER ASSEMBLY																	

CL = CLEANLINESS LEVEL PER LSP 14-0011

SYM OR NO.	PROCESS OR FINISH	GRUMMAN SPEC OR MILITARY SPEC	SYM OR NO.	PROCESS OR FINISH	GRUMMAN SPEC OR MILITARY SPEC	SYM OR NO.	PROCESS OR FINISH	GRUMMAN SPEC OR MILITARY SPEC
						W	WELD(FUSION)	MIL-W-8611

I & T: IDENTIFICATION AND TRACEABILITY IN ACCORDANCE WITH : NONE

GRUMMAN AIRCRAFT ENGRG CORP, BETHPAGE, L. I., NEW YORK

SIZE	CODE IDENT NO.		
B	26512	LDW280-52350	D
SCALE NONE		SHEET 2.00	

ENG 77.2 7-65

01 NAS 9-1100

CL				-7	-5	-3	CODE IDENT	PART NO.	I&T	NOMENCLATURE OR DESCRIPTION	MATERIAL	GOVT SPEC	COML SPEC	STOCK SIZE	PROCESS SYM	FINISH NO.	ZONE
								LDW280-16000									
J								↑ -3017ASO-4	E	TUBE	SEE DWG						
↑								-3018ASF-4	↑	↑	↑						
					1			-1211ASF-20									
				1				-1156ASO-20									
						1		-1197ASO-12		↓							
						1		-1102ASO-12		TUBE							
					1			-538		WELDED ASSY							
						1		-515		↑							
						1		-1577									
						1		-1576									
					1			-1575									
						1		-527									
				1				-1574									
				1				-1573									
				1				-1572									
					1			-1571		↓							
					1			-1570		WELDED ASSY							
						1		-1060ASF-4		TUBE							
						1		-3014ASO-4		↑							
						1		-1058ASF-4									
						1		-1057ASO-4									
						1		-1826ASF-12									
						1		-1055ASO-4									
						1		-3015ASO-4									
						1		-3013ASO-4									
						1		-3019ASF-4									
						1		-727ASO-12			↓						
↓						1		-3016ASO-4		↓	SEE DWG						
J						1		↓ -3009ASF-4	↓	TUBE	SEE DWG						
								LDW28C 16000	E								

QTY PER ASSEMBLY

SYM OR NO.	PROCESS OR FINISH	GRUMMAN SPEC OR MILITARY SPEC	SYM OR NO.	PROCESS OR FINISH	GRUMMAN SPEC OR MILITARY SPEC	SYM OR NO.	PROCESS OR FINISH	GRUMMAN SPEC OR MILITARY SPEC

I&T: IDENTIFICATION AND TRACEABILITY IN ACCORDANCE WITH : NONE

GRUMMAN AIRCRAFT ENGRG CORP, BETHPAGE, L. I., NEW YORK

SIZE	CODE IDENT NO.		
B	26512	LDW280-52350	D

SCALE NONE

SHEET 2.01

ENG 77.2 7-65

01

NAS 9-1100

LDW280-52350 E

MODEL OR END ITEM	NEXT ASSY	MODULE OR SER NO.	REQD PER MODULE OR END ITEM
PART NO.		GAEC SCH NO.	

MODEL OR END ITEM	NEXT ASSY	MODULE OR SER NO.	REQD PER MODULE OR END ITEM
PART NO.		GAEC SCH NO.	

MODEL OR END ITEM	NEXT ASSY	MODULE OR SER NO.	REQD PER MODULE OR END ITEM
LEM	LDW280-52001	LEM2(32)	1
PART NO. LDW280-52350-3		GAEC SCH NO. 30 —	

I&T(E) EXEMPT (5)

SH REV STATUS: FOR DESCRIPTION OF REV SEE SUBQ SH

SHEET	1.00	1.10	1.11	2.00	2.01	2.02	2.03	2.04	3.00
REV	E	D	D	D	D	E	E	E	E
SHEET	3.01	4.00	5.00	1.12	1.13	2.05	1.14		
REV	E	E	E	D	D	E	E		
SHEET									
REV									

LAST SECT LTR USED K

LAST DASH NO. USED -7

GRUMMAN REL INFO E

PRIM NO. JK(001)

450 MP-IE-12/9/7

UNLESS OTHERWISE SPECIFIED DIMENSIONS ARE IN INCHES.
TOLERANCE UNLESS SPECIFIED
FRACTIONS - DECIMALS - ANGLES
~ ~ ~

ORIG DWG AUTH
DETAIL SPEC REQUIREMENT ✓
CLASS II ENGRG CHANGE
CLASS I ENGRG CHANGE

CONTRACT NO. NAS9-1100
LINE ITEM 091
DOCUMENTATION TYPE II

DRAWN BY E.SWEENEY 8/29-66
WEIGHTS
LAYOUT BY P.COMMISSO
CHECKED BY
GR LEADER CHF. J.Wolf 9-12-66
V.D.I.
STRUCTURES 8W 9-21
STRUCTURES HILDEEMAN 9-
PROJ ENGR R.M. Carbee 9-
GROUP Bott. 10-10-66

GRUMMAN AIRCRAFT ENGRG CORP
BETHPAGE, L. I., NEW YORK

LINES INSTALLATION — PROPELLANT FEED SYSTEM, ASCENT STAGE

SIZE B
CODE IDENT NO. 26512
LDW280-52350 E
SCALE NONE
SHEET 1.00 OF 16

C.D.R. 10 SEPT 1966

ENG 77.1 12-65

01

NAS 9-1100

REVISIONS

CHANGE LTR	ITEM NO.	SHEET NO.	ZONE	GRUMMAN INFO ONLY PRIOR TO EVENT	DET SPEC	CLASS I	CLASS II	ENGRG ORDER	DESCRIPTION	EFFECTIVITY	DISPOSITION OF EXISTING PARTS		CHANGED BY AND DATE	ENGRG APPD	GOVT APPD
											REWORK	SCRAP			
		1.00							ADDED SH 1.14, LAST SECT LTR USED K WAS J SHT 1.00 OF 16 WAS SHT 1.00 OF 15						
E	1	5.00 2.05, 2.03 3.01	18B	A		✓		EO E1 LCD 1894	ON -5 ASSY ADDED LDW 280M11392-11 (1), MS 21042L3 (1), SEE NOTE 29. DELETED NAS 1003-4H (1) REVISED NOTE 29 ADDED " & -1575 FUEL (REF)	LM-2	✓		D. JACOBSON 12-6-67		
	2	4.00 2.05	8B	A				EO E2 LCD 1894	IN SECT F-F REMOVED ".005 MAX GAP PERMISSIBLE AFTER ASSY ON -5 ASSY ADDED LDW 280-51888-1 (1)						
	3	3.01		E				LEO 280-769 LCD 1961	DELETED NOTE 31		NOT	REQD			
	4						✓	EO E4	INCORRECT CHANGE NUMBER ISSUED ON LEO 280-769 E3 WAS E1	NOT REQD					
	5	3.01		A		✓		EO E5, LCD 1894	REVISED NOTE 26 ADDED STEP "A."	LM-2	✓				
	6	3.00					✓	EO E6	REVISED NOTE 10, MS 20995C32 WAS MS 20995F32						
	7	4.00 2.02 2.04 3.01	7B					EO E7	REMOVED GB511J-3-3(2) & SHIM PER MIL-S-22499 COMP I, TYPE 1, CLASS II (.093 MAX) ADDED GB 511J-3-5 (2) & SHIM AS REQD. .188 MAX (SEE NOTE 34) ADDED NOTE 34						
	8	5.00 2.05, 3.01	18B 25B	A		✓		EO E8 LCD 1894	ADDED MS 51957-4(2) (SEE NOTE 35) TWO PLACES ADDED NOTE 35						
	9	2.04					✓	EO E9	ON-5 ASSY LSC 270-826-11 WAS LSC 270-826-13 ON-7 ASSY LSC 270-826-13 WAS LSC 270-826-11						
	10	5.00 2.03, 2.05 3.01	24B 20B					EO 10	ADDED VIEW K-K ADDED LDW 280-16005-19 (1), MS 20613C4(3) MS 20427M6 (2) ADDED NOTE 36						

CHG APPROVED

LTR	GROUP LDR	VDI	STRUCTURES	STRUCTURES
E				

FOR CONTINUATION OF REVISIONS SEE SHEET ______

GRUMMAN AIRCRAFT ENGRG CORP, BETHPAGE, L. I., NEW YORK

SIZE	CODE IDENT NO.		
B	26512	LDW280-52350	E
SCALE NONE			SHEET 1.14

ENG 77.3 5-66

01

NAS 9-1100

CL				-7	-5	-3	CODE IDENT	PART NO.	I&T	NOMENCLATURE OR DESCRIPTION	MATERIAL	GOVT SPEC	COML SPEC	STOCK SIZE	PROCESS SYM	FINISH NO.	ZONE
								LDW280-16000									
J						1		-1825ASF-12	E	TUBE	SEE DWG						
						1		-1824ASF-4									
						1		-1823ASF-10									
J								-1394ASO-4		TUBE	SEE DWG						
								LDW280-16000									
J						7		LSC269-226-4		ELBOW	SEE NOTE 1						
A				2		6		GB511J-3-3		BOLT	STD PART						
						6		AN960C10L		WASHER	STD PART						
						2		AN815-4C		UNION	STD PART	(SEE NOTE 11)					
				4		24		AN960D10L		WASHER	STD PART						
A					8	80		AN960D8L		WASHER	STD PART						
A						1		AN735D7		CLAMP, HOSE	STD PART						
						1		AN735D5		CLAMP, HOSE	STD PART						
J						2		LSC269-222-4		TEE	SEE NOTE 1						
						17		LSC269-224-4		UNION							
						3		LSC269-228-4		TEE							
						1		LSC270-701-1		COUPLING ASSY							
				3	3	2		LSC269-206-20		UNION							
						1		-200-4									
						2		-200-12									
						2		-200-10		UNION							
				1	1			-365-1		TEE							
						1		-218-4		UNION							
						1		-240-2		TEE							
						2		LSC269-205-4		CAP	SEE NOTE 1	(SEE NOTE "11)					
J						1		LDW280P16212-5		BLOCK	SEE DWG						
A						1		LDW280P16221-17		SPACER							
A						1		LDW280P16212-3		BLOCK							
A						1		LDW280P16212-1		BLOCK							
A						1		LDW280P16216-1	E	BLOCK	SEE DWG						

QTY PER ASSEMBLY

SYM OR NO.	PROCESS OR FINISH	GRUMMAN SPEC OR MILITARY SPEC	SYM OR NO.	PROCESS OR FINISH	GRUMMAN SPEC OR MILITARY SPEC	SYM OR NO.	PROCESS OR FINISH	GRUMMAN SPEC OR MILITARY SPEC

I & T: IDENTIFICATION AND TRACEABILITY IN ACCORDANCE WITH : NONE

GRUMMAN AIRCRAFT ENGRG CORP, BETHPAGE, L. I., NEW YORK

SIZE	CODE IDENT NO.		
B	26512	LDW280-52350	E

SCALE NONE

SHEET 2.02

ENG 77.2 7-65

01

NAS 9-1100

CL	QTY PER ASSEMBLY							CODE IDENT	PART NO.	I&T	NOMENCLATURE OR DESCRIPTION	MATERIAL	GOVT SPEC	COML SPEC	STOCK SIZE	PROCESS SYM	FINISH NO.	ZONE
					-7	-5	-3											
A							1		LDW280P11598-11	E	BRACKET	SEE DWG						
A							1		LDW280P16221-11	E	SPACER	SEE DWG						
J							4		LDW280P16230-11	E	TUBE	SEE DWG						
							1		LDW280P11598-15	E	BRACKET	SEE DWG						
A							1		GC12H-5	E	CLAMP	GAEC STD						
A							1		GC12H-7	E	CLAMP							
A							6		G C12H-20	E	CLAMP							
							4		-12									
							1		-10									
							1		-8									
							8		-6									
A							28		GC12H-4		CLAMP							
A							16		GB511J-08-7									
J							2		GU10A-6D		UNION							
J							2		GE11B-6D		ELBOW							
A							4		GB511J-08-8									
J							1		GE11B-4D		ELBOW	GAEC STD						
J					2	2			NAS1081C3A5		SET SCREW	STD PART						
A							40		AN960C8L		WASHER							
A							20		MS21043L08		NUT							
A							3		MS21043L3		NUT	STD PART						
A					3	1	12		MS21042L3		NUT	STD PART						
A							44		MS21042L08		NUT	STD PART						
A					1				LDW280-16005-19		SUPPORT	SEE DWG						
A							1		LDW280-11534-14		BRACKET	SEE DWG						
J							1		LSC269-234-2		TEE	SEE NOTE 1						
J					1	1			LDW270M10070-11		NUT	TUBE ASSY						
							4		LDW270M10042-13		FLANGE							
							4		LDW270M10044-11		FLANGE							
J							4		LDW270M10043-11	E	ADAPTER	SEE DWG						

SYM OR NO.	PROCESS OR FINISH	GRUMMAN SPEC OR MILITARY SPEC	SYM OR NO.	PROCESS OR FINISH	GRUMMAN SPEC OR MILITARY SPEC	SYM OR NO.	PROCESS OR FINISH	GRUMMAN SPEC OR MILITARY SPEC

I&T: IDENTIFICATION AND TRACEABILITY IN ACCORDANCE WITH : NONE

GRUMMAN AIRCRAFT ENGRG CORP, BETHPAGE, L. I., NEW YORK

SIZE	CODE IDENT NO.		
B	26512	LDW280-52350	E

SCALE NONE

SHEET 2.03

ENG 77.2 7-65

01

NAS 9-1100

CL				7	5	-3	CODE IDENT	PART NO.	I&T	NOMENCLATURE OR DESCRIPTION	MATERIAL	GOVT SPEC	COML SPEC	STOCK SIZE	PROCESS SYM	FINISH NO.	ZONE
A						13		GB511J-08-2	E	BOLT	GAEC STD						
A						1		GB511J-08-11	↑	BOLT	↑						
A						25		GB511J-08-1	↓	BOLT	↓						
A					4	4		GB511J-08-3	E	BOLT	GAEC STD						
A						1		LDW360-52311-1		FUEL.OX TEMP. INSTL	SEE DWG						
J						1		LDW360-52251-6	E	TRANS. INSTL	SEE DWG.						
J						1		LDW360-52251-5	E	TRANS. INSTL	SEE DWG.						
A						1		GT511D-4-85	E	FLEX TUBE	GAEC STD						
A						1		GT511D-6-110	E	FLEX TUBE	↑						
↑						2		GB511J-3-29	↑	BOLT							
						2		GB511J-3-16		BOLT							
						2		GB511J-3-26		BOLT	↓						
↓						2		GB511J-3-28	↓	BOLT	GAEC STD						
A						AS REQD		~	E	SHIM		MIL-S-22499	COMP1, TYPE 1,	CLASS II			
A						1		LDW280-11534-17		BRACKET	SEE DWG						
A						2		GB511J-3-5	E	BOLT	GAEC STD						
A				1	1			GS570M-2-221	E	SEAL	GAEC STD						
				1	1			GS13AK-129.090	↑	SEAL							
J						4		GS13AJ-110		SEAL							
J						1		GS13AJ-115		SEAL							
J					1			LSC270-826-11		BELLOWS	SEE NOTE 1						
J				1				LSC270-826-13		BELLOWS	↑						
J						1		LSC269-224-8		UNION							
J						1		LSC269-240-22		TEE							
J						1		LSC269-209-12		45° ELBOW							
J						2		LSC269-202-12		ELBOW							
J						2		LSC269-113-4		SEAL							
J						4		LSC269-118-6		SEAL							
J						1		LSC269-113-12	↓	SEAL	↓						
J						2		LSC269-113-8	E	SEAL	SEE NOTE 1						

QTY PER ASSEMBLY

SYM OR NO.	PROCESS OR FINISH	GRUMMAN SPEC OR MILITARY SPEC	SYM OR NO.	PROCESS OR FINISH	GRUMMAN SPEC OR MILITARY SPEC	SYM OR NO.	PROCESS OR FINISH	GRUMMAN SPEC OR MILITARY SPEC

I & T: IDENTIFICATION AND TRACEABILITY IN ACCORDANCE WITH : NONE

GRUMMAN AIRCRAFT ENGRG CORP, BETHPAGE, L. I., NEW YORK

SIZE B
CODE IDENT NO. 26512
LDW280-52350 E ⓔ
SCALE NONE
SHEET 2.04

ENG 77.2 7-65

01

NAS 9-1100

				-7	-5	-3	CODE IDENT	PART NO.	I&T	NOMENCLATURE OR DESCRIPTION	MATERIAL	GOVT SPEC	COML SPEC	STOCK SIZE	PROCESS SYM	FINISH NO.	ZONE
				8	8			519273	E	BOLT	SEE NOTE 25						
				1	1			519266		CAN, ZERO G							
				1	1			519269		BAFFLE ASSY							
						2		515661		SEAL, COVER	SEE NOTE 25						
A				2				MS 20427 M6		RIVET	STD PART						
A				3				MS 20613 C4		RIVET	STD PART						
A						4		MS 51597-41		SCREW	STD PART						
A						2		GB511T-4H6		BOLT	GAEC STD						
A						12		GB511T-4H5		BOLT	GAEC STD						
A						96		GB511T-4H4		BOLT	GAEC STD						
A						2		NAS674V7H		BOLT	STD PART						
A				4	7			NAS1003-4H									
A				3				NAS1003-8H									
J				8	8			NAS1003-11H		BOLT	STD PART						
A					1			LDW280-51888-1		SUPPORT INSTL	SEE DWG						
A					1			LDW280-51201-1-1		RING INSTL	SEE DWG						
A				1				LDW280-51199-1		RING INSTL							
J				1	1			LDW280M16195-11		WASHER							
J					1			LDW280M16192-15		ORIFICE							
J				1				LDW280M16192-17		ORIFICE							
A						2		LDW280M11205-15		BOLT							
A						6		LDW280M11205-11		BOLT							
J				1	1			LDW280M11392-11		FITTING							
				1	1			LDW280M15025-13		COVER, TANK							
				1	1			LDW280M16193-15		GASKET							
J				4	4			LDW280M11380-11		SHIM							
A				1				LDW280M10978-1		MOUNT ASSY							
J						1		LDW280-52984-3		WELDED ASSY							
J						1		LDW280-52984-1	E	WELDED ASSY	SEE DWG						

QTY PER ASSEMBLY

SYM OR NO.	PROCESS OR FINISH	GRUMMAN SPEC OR MILITARY SPEC	SYM OR NO.	PROCESS OR FINISH	GRUMMAN SPEC OR MILITARY SPEC	SYM OR NO.	PROCESS OR FINISH	GRUMMAN SPEC OR MILITARY SPEC

I & T: IDENTIFICATION AND TRACEABILITY IN ACCORDANCE WITH : NONE

GRUMMAN AIRCRAFT ENGRG CORP, BETHPAGE, L. I., NEW YORK

SIZE	CODE IDENT NO.		
B	26512	LDW280-52350	E

SCALE NONE SHEET 2.05

ENG 77.2 7-66

01

NAS 9-1100

NOTES:

1. COMMERCIAL PARTS - SEE SPEC. CONTROL DRAWING BEFORE ORDERING.
2. TUBE NUMBERS & WELDED ASSY NUMBERS ARE DASH NUMBERS OF LSP280-16000.
3. INDUCTION BRAZE IN ACCORDANCE WITH LSP-14-6303 & LSP-14-6304. ALL LSC269-200 & 300 SERIES FITTINGS.
4. ~~PROPELLANT FEED VALVES & FITTINGS SHALL BE CLEANED TO LEVEL "J" OF LSP-14-0011. UPON INSTL. OF COMPONENTS INTO A SUBSYSTEM, LEVEL "G" OF LSP-14-0011 SHALL BE MAINTAINED.~~
5. THE FOLLOWING TUBES ARE NOT TO BE INSTALLED UNTIL AFTER COLD FLOW: -527, -609ASF-10, -611ASF-4, -1187AFD-6, -1291 AFD-6, -1287AFD-6, -1197ASO-12, -1196ASF-8, -1289AOD-4, -1140ASF-4, -1190AFD-6, -1191AFD-6, -1192 AFD-6, -1193AFD-6, -1194AFD-6, -1195AFD-6, -1102ASO-12, -636ASF-4.
6. TORQUE TANK BOLTS NO. GB511T-3H2 to 32-35 INCH POUNDS.
7. ~~BELLOWS NO. LSC270-826-11 & -13 SHALL BE CLEANED PER LSP270-0001A, TABLE I - LEVEL G.~~
8. ALL GAMAH JOINT CONNECTIONS SHALL BE MADE IN ACCORDANCE WITH LSP-14-17402.
9. ~~PROCEDURE FOR INSTALLING ORIFICE PLATES IN ASCENT STAGE PROPELLANT LINES:~~
   - ~~a) LOOSEN SUPPORT CLAMP BETWEEN ORIFICE & ENGINE BAY BELLOWS ASSY.~~
   - ~~b) REMOVE THE FOUR 1/4" RETAINING BOLTS SECURING THE ORIFICE PLATE & TWO ORIFICE FLANGES, (THREE (3) AN4C7A BOLTS & ONE (1) AN174C7A BOLT)~~
   - ~~c) ALTERNATELY ROTATE THE THREE (3) SPREADER BOLTS (AN4C6A) UNTIL THE TWO ORIFICE FLANGES ARE SEPARATED APPROX. 1/8".~~
   - ~~NOTE: IF IT IS DEEMED NECESSARY TO REPLACE THE TWO TEFLON "O" RING SEALS IN THE ORIFICE FLANGES, INCREASE THE FLANGE SEPARATION TO PERMIT SEAL REMOVAL & REPLACEMENT.~~
   - ~~d) GRASP THE ORIFICE PLATE TAB & LIFT UP APPROX. 1/16" TO FREE THE PLATE FROM THE INDEX PIN INSTALLED IN LDW270M10008-1 FLANGE ASSY & REMOVE ORIFICE PLATE.~~
   - ~~e) INSTALL NEW ORIFICE PLATE BY REVERSING PROCEDURE ABOVE. AFTER ALIGNING ORIFICE PLATE WITH INDEXING PIN, INSTALL THE LOOSE TOLERANCE AN174C7A BOLT BEFORE INSTALLING THE THREE (3) AN4C7A RETAINING BOLTS. TORQUE ALL FOUR (4) RETAINING BOLTS TO 70-80 INCH POUNDS.~~
10. LOCKWIRE IN ACCORDANCE MS33540, USING MS20995C32 LOCKWIRE.
11. AFTER COLD FLOW & PRIOR TO DELIVER OF VEHICLE, REMOVE AN815-4C (4), CUT ~~-1056ASO-4,~~ -1057ASO-4 & ~~-1058ASF04,~~ -1060ASF-4 & BRAZE LSC269-205-4 (4) AS SHOWN.
12. ~~GP10M-89 IS IDENTICAL TO LDW270M10007-79~~
    ~~GP10M-207 IS IDENTICAL TO LDW270M10015-81.~~
13. SUBSTITUTION OF NAS1132V, AN525-832R OR AN525-832 BOLTS FOR THE GB511J-08 BOLT IS PERMISSIBLE.
14. PROPELLANT FEED BELLOWS ARE TO BE INSTALLED PER LEI-280-008.
15. VERIFY PROPULSION SYSTEM INTEGRITY BY PERFORMING HELIUM LEAK TEST AT 40 ± 5 PSIG AS FOLLOWS:
    - A. CONNECT HELIUM SUPPLY TO GP9401 AND APPLY 40 ± 5 PSIG.
    - B. SHUT OFF HELIUM SUPPLY AND MONITOR FOR 15 MINUTES. NO DETECTABLE DECAY PERMITTED. IF LEAKAGE IS EVIDENT, RELIEVE PRESSURE, CORRECT AND RETEST.
    - C. AFTER SATISFACTORY COMPLETION OF DECAY TEST, REDUCE PRESSURE TO 10 ±5 PSIG AND ATTACH A WARNING TAG TO INDICATE THE SYSTEM IS CHARGED WITH 5-15 PSIG BLANKET PRESSURE.
    - D. CONNECT HELIUM SUPPLY TO GP9402, APPLY 40 ± 5 PSIG AND REPEAT STEPS "B" AND "C".
    - E. VERIFY THAT PROPULSION FUEL AND OXIDIZER INTERFACES JP9482 AND JP9480 ARE PLUGGED AND RCS INTERCONNECT VALVES (FUEL & OXIDIZER) ARE CLOSED. (TOTAL OF 8 RCS VALVES).
    - F. CONNECT HELIUM SUPPLY TO GP9422 AND APPLY 40 ± 5 PSIG.
    - G. REPEAT STEP "B" ABOVE.
    - H. OPEN PRIMARY AND SECONDARY SOLENOID LATCHING VALVES AND CONNECT HELIUM SUPPLY TO GP9406 AND APPLY 40 ± 5 PSIG.
    - I. REPEAT STEPS "B" AND "C" ABOVE AT GP9406, GP9442 AND GP9443.
16. ~~HOSE END FITTINGS ON LDW270-52206-1, -3, -5 & -7 HOSES ARE TO BE TORQUED TO 70-120 INCH POUNDS.~~
17. ~~GR18A-6646 FITTINGS TO BE TORQUED TO 72-125 INCH POUNDS. (FUEL) AND 270-300 INCH POUNDS (OX).~~
18. GE11B-6D FITTING TO BE TORQUED TO 72-125 INCH POUNDS.
    GE11B-4D FITTING TO BE TORQUED TO 40-65 INCH POUNDS.
19. ~~INSTALL BOLTS FINGER TIGHT & TORQUE IN SEQUENCE AS FOLLOWS:~~
    - ~~A. PHYSICAL LOCATION FOR START IS OPTIONAL~~
    - ~~B. TORQUE ALL BOLTS PER SEQUENCE TO 30 INCH POUNDS & REPEAT SEQUENCE, UNTIL BOLTS DO NOT TURN WHEN 30 INCH POUNDS IS APPLIED.~~
    - ~~C. REPEAT STEP "B" APPLYING 50 INCH POUNDS.~~
    - ~~D. REPEAT STEP "B" APPLYING 70-80 INCH POUNDS FOR FINAL TORQUE.~~
20. ~~SELECT SECONDARY DASH NUMBER OF SEAL IN ACCORDANCE WITH LPS-280-42.~~
21. ~~EVENLY TORQUE THE CLAMP BOLTS 8-10 INCH POUNDS OVER THE NUT LOCKING FEATURE REQUIREMENTS.~~
22. ~~MEASURE THE GAP BETWEEN EACH HALF OF THE CLAMP OF EACH SIDE AND AVERAGE TO DETERMINE SHIM THICKNESS, SHIM THICKNESS ON EACH SIDE TO BE THIS AVERAGE VALUE AND MADE FROM LAMINATED SHIM STOCK 5052-H39, QQA318, MS22499, COMP. I, TYPE I, CLASS II.~~
23. ~~REMOVE BOLTS & ADD REQUIRED SHIMS. REPLACE BOLTS & TORQUE 25-30 INCH POUNDS.~~
24. ~~SHIM AS REQUIRED USING LAMINATED SHIM STOCK 5072-H39, QQA318, MS22499, COMP. I, TYPE I, CLASS II.~~
25. AEROJET GENERAL PART NOs. 519269, 519266, 519372 & 515661 ARE PART OF LSC280-7.

GRUMMAN AIRCRAFT ENGRG CORP., BETHPAGE, L. I., NEW YORK

SIZE	CODE IDENT NO.		
B	26512	LDW280-52350	E
SCALE			SHEET 3.00

E

ENG 73.1 6-64

01

NAS 9-1100

26. STARTING AT ANY POINT, NUMBER THE BOLT POSITIONS CONSECUTIVELY FROM 1 THROUGH 60. INSTALL ALL BOLTS IN PLACE FINGER TIGHT, TORQUE ALL BOLTS IN SEQUENCE TO 15 INCH POUNDS. REPEAT SEQUENCE AS REQUIRED UNTIL BOLTS NO LONGER TURN WHEN 15 INCH POUNDS IS APPLIED. REPEAT THIS PROCEDURE USING 25 INCH POUNDS AND AT 50 INCH POUNDS. THEN TORQUE ALL BOLTS IN SEQUENCE TO 75 TO 80 INCH POUNDS. TORQUING SEQUENCE: 1,31,46,16,53,23,38,8,27,57,12,42,4,34,49,19,40,10,25,55,36,6,21,51,14,44,59,29,9,39,54,24,47,17,32,2,13,43,28,58,37,7,22 52,35,5,20,50,15,45,60,30,11,41,26,56,18,48,3 & 33. STEP "A". AFTER INITIAL INSTALLATION EACH BOLT PATTERN MUST BE RETORQUED IN THE TIGHTENING DIRECTION AND IN SEQUENCE TO PRINT VALUES AT 72 HOUR INTERVALS, REPEAT TWICE, I.E., THE INITIAL INSTALLATION PLUS TWO TORQUES. INSTALL LOCKWIRE.

27. INSTALL ORIFICE PLATE LDW280M16192 WITH ELECTRO ETCHED PART # FACING TOWARD THE ENGINE, STAKE IN PLACE PER [illegible].

28. ON ASSY. RECORD DIMENSION "C" TOLERANCE ON DIMENSION "C" IS TO BE "A" + "B" + .005 MAX.

29. ASSEMBLE LDW280M11392-11 STUD TO COVER WITH EPON 919 ON THREADS. (REMOVE EXCESS EPON 919) LDW280M11392-11 IS LOCATED ABOVE -1574 OX (REF), ℄-1575 FUEL (REF) OF ALIGNMENT FOR THIS STUD ONLY. TORQUE TO 45-48 INCH POUNDS ABOVE LOCKING OF NUT. EPON 919 PER LSP 14-14102.

30. UPON INSTALLATION OF -5 & -7 ASSY INTO -3 INSTL. APPLY SECONDARY SEALANT LED-520-34 (NITROSO) ON OXIDIZER COVER-TANK INTERFACE & LED-520-35 VISTANEX ON FUEL COVER-TANK INTERFACE PER LPC 280-46. LED-520 IS AN INTERIM PROCUREMENT DOCUMENT.

31. ~~BONDING TO BE IN ACCORDANCE WITH LSP390-001.~~

32. TORQUE GB511J-08-7 (16) & GB511J-08-8 (4) TO 12-15 INCH POUNDS.

33 LUBRICANT SHALL BE APPLIED IN DROPLETS OF 3/32 ± 1/32 OF AN INCH IN DIAMETER AND 1/2 ± 1/8 OF AN INCH APART, MINIMUM OF 2 DROPLETS ON SURFACE OR THREAD TO BE LUBRICATED

34. SHIM MATERIAL 2024T3 AL ALY SHT, QQ-A-250/4, FINISH 76
BOND SHIM TO LDW 280M 10667-1 USING EC-2216 PER LSP-14-22500 CURE RANGE I.

35. REMOVE MS 51957-41 SCREW PRIOR TO LEAK CHECK OF PRIMARY SEAL. AFTER CHECK HAS BEEN PERFORMED, REINSTALL SCREWS PER LPC-280-47, TORQUE TO 15-20 INCH POUNDS.

36. BOND LDW 280-16005-19 TO LDW 280M 10895-1 WITH EPON 934 PER LSP 14-22500 CURE RANGE I.

GRUMMAN AIRCRAFT ENGRG CORP., BETHPAGE, L. I., NEW YORK			
SIZE B	CODE IDENT NO. 26512	LDW280-52350	E
SCALE		SHEET 3.01	

ENG 73.1 6-64

01

NAS 9-1100

01/04 NAS 9-1100

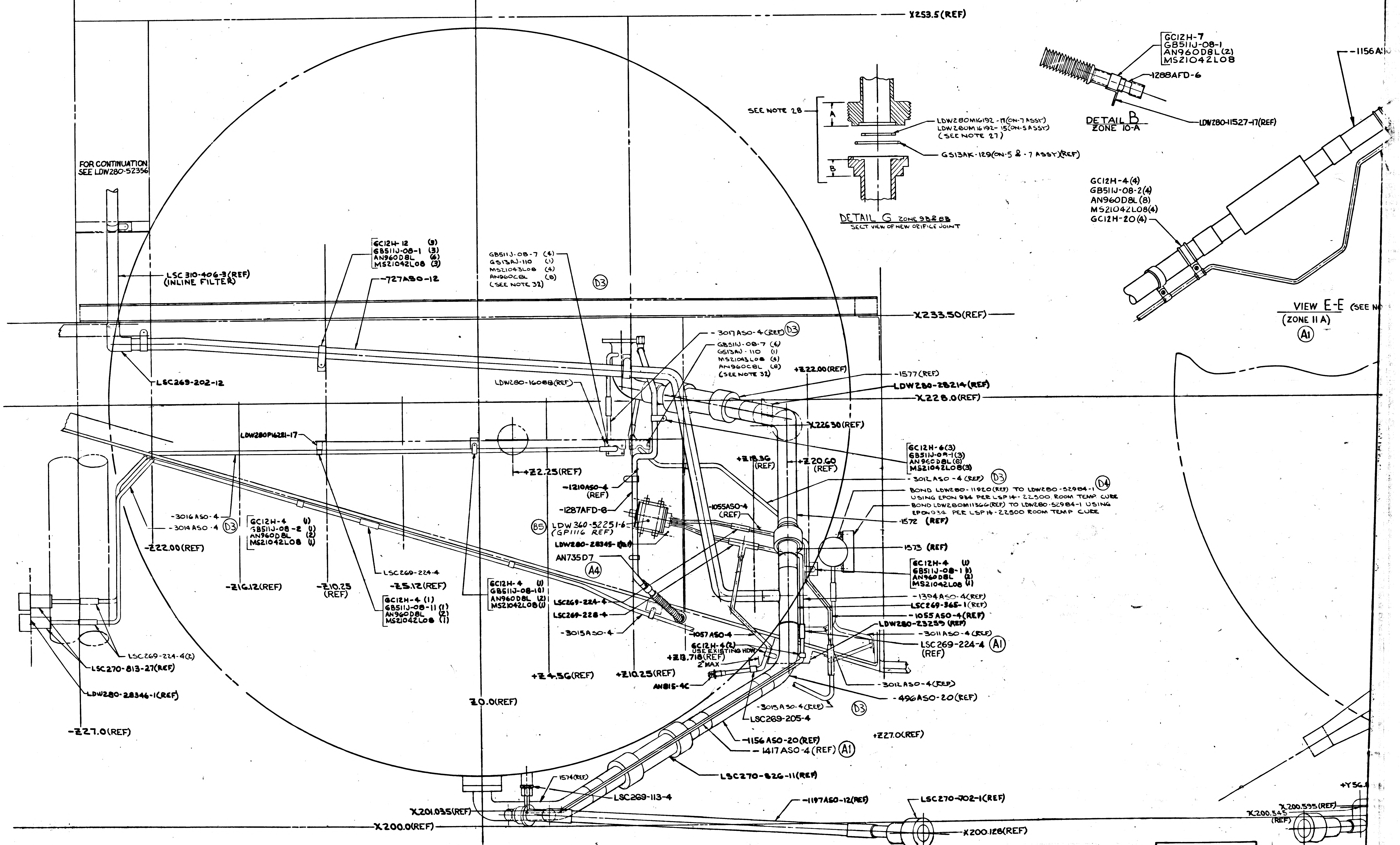
X253.5(REF)
FOR CONTINUATION SEE LDW280-52356
LSC 310-406-3(REF) (INLINE FILTER)
GC12H-12 (3)
GB511J-08-1 (3)
AN960D8L (6)
MS21042L08 (3)
-727ASO-12
GB511J-08-7 (4)
GS13AJ-110 (1)
MS21043L08 (4)
AN960C8L (8)
(SEE NOTE 32)
D3
X233.50(REF)
LSC269-202-12
LDW280-16088(REF)
-3017ASO-4(REF) D3
GB511J-08-7 (4)
GS13AJ-110 (1)
MS21043L08 (4)
AN960C8L (8)
(SEE NOTE 32)
+Z22.00(REF)
-1577(REF)
LDW280-28214(REF)
X228.0(REF)
X226.30(REF)
LDW280P16221-17
+Z2.25(REF)
+Z18.36 (REF)
+Z20.60 (REF)
GC12H-6(3)
GB511J-08-1(3)
AN960D8L(6)
MS21042L08(3)
-3012ASO-4(REF) D3
BOND LDW280-11920(REF) TO LDW280-52984-1 USING EPON 934 PER LSP14-22500 ROOM TEMP CURE D4
BOND LDW280M11366(REF) TO LDW280-52984-1 USING EPON934 PER LSP14-22500 ROOM TEMP CURE
-1572 (REF)
-1573 (REF)
-1210ASO-4 (REF)
-1287AFD-6
-1055ASO-4 (REF)
B5 LDW 360-52251-6 (GP1116 REF)
LDW280-28345-1(REF)
AN735D7
A4
-3016ASO-4
-3014ASO-4 D3
GC12H-4 (1)
GB511J-08-2 (1)
AN960D8L (2)
MS21042L08 (1)
-Z22.00(REF)
-Z16.12(REF)
-Z10.25 (REF)
LSC269-224-4
-Z5.12(REF)
GC12H-4 (1)
GB511J-08-11 (1)
AN960D8L (2)
MS21042L08 (1)
GC12H-4 (1)
GB511J-08-1 (1)
AN960D8L (2)
MS21042L08 (1)
LSC269-224-4
LSC269-228-4
-3015ASO-4
GC12H-4 (1)
GB511J-08-1 (1)
AN960D8L (2)
MS21042L08 (1)
-1394ASO-4(REF)
LSC269-365-1(REF)
-1055ASO-4(REF)
LDW280-23259(REF)
-3011ASO-4(REF)
LSC269-224-4 (REF) A1
-1057ASO-4
GC12H-4(2) USE EXISTING HDW
+Z13.718(REF)
2" MAX
AN815-4C
+Z4.56(REF)
+Z10.25(REF)
-3012ASO-4(REF)
-496ASO-20(REF)
-3015ASO-4(REF)
D3
LSC269-205-4
+Z27.0(REF)
-1156ASO-20(REF)
-1417ASO-4(REF) A1
LSC270-826-11(REF)
LSC269-224-4(2)
LSC270-813-27(REF)
LDW280-28346-1(REF)
-Z27.0(REF)
Z0.0(REF)
1574(REF)
LSC269-113-4
X201.035(REF)
X200.0(REF)
-1197ASO-12(REF)
LSC270-702-1(REF)
X200.128(REF)
X200.595(REF)
X200.545 (REF)
+Y56.
SEE NOTE 28
A
B
LDW280M16192-17(ON-7 ASSY)
LDW280M16192-15(ON-5 ASSY)
(SEE NOTE 27)
GS13AK-129(ON-5 & -7 ASSY)(REF)
DETAIL G ZONE 9B & 8B
SECT VIEW OF NEW ORIFICE JOINT
GC12H-7
GB511J-08-1
AN960D8L(2)
MS21042L08
-1288AFD-6
DETAIL B
ZONE 10-A
LDW280-11527-17(REF)
-1156A
GC12H-4(4)
GB511J-08-2(4)
AN960D8L(8)
MS21042L08(4)
GC12H-20(4)
VIEW E-E (SEE N
(ZONE 11 A)
A1

CODE IDENT NO. 26512

LDW280-52350 SHEET 4

12
11
10
9
8
+Y44.538 (REF)
X255.875 (REF)
FOR INSTALLATION OF PRESSURIZATION SYSTEM SEE DWG LDW280-52351
GC12H-7
GB511J-08-1
AN960D8L(2)
MS21042L08
188AFD-6
-1156ASO-20 (REF)
LDW280-11527-17(REF)
-1417 ASO-4 (REF)
LSC 280-7-54 (REF)
LSC 310-403-3(REF)
+Y17.25(REF)
-727ASO-12(REF)
LSC269-206-20
+Y21.47 (REF)
X225.84(REF)
GC12H-4 (1)
GB511J-08-1 (1)
AN960D8L (2)
MS21042L08 (1)
A7
-3016ASO-4(REF) (OX HI POINT BLEED)
LSC270-813-27(REF)
-3014 ASO-4(REF) (OX ΔP TEST POINT)
-1572 (ON-7)
D5
-1573 (ON-7)
LSC269-3651 (ON-5)
-1037ASO-4(REF)
-1055ASO-4
A1 -1394 ASO-4
-496ASO-20 (ON-7)
LSC 269-224-4
LSC269-222-4
X218.055
+Y35.0
X210.300
E
+Y22.0 (REF)
-1156ASO-20 (ON-7)
+Y24.840(REF)
-3015ASO-4(REF)
GC12H-4(3)
GB511J-08-3
AN960D8L(2)
MS21042L08
9.00(TRUE)
(ON-7)
GB511J-3-3 (2)
AN960D10L(4)
MS21042L3(2)
SHIM PER MIL-S-22499 COMP. TYPE I CLASS II
LDW280M15025-13(REF)
(ZONE 7C) F
E(ZONE 12C)
LDW280M10855-1(REF)
GS570V-1
+Y54.00(REF)
X202.855(REF)
+Y56.888(REF)
-1102ASO-12(REF)
F
+Y38.35(REF)
LSC269-206-20(3) SEE NOTE 7 & 14
LSC270-826-11
-1417 ASO-4
X201.035(REF)
X200.595(REF)
X200.545 (REF)
-1574 (ON-7)
X200.00(REF)
SEE LDW270-51010 FOR ENGINE CONNECTIONS
+Y10.50(REF)
X232.1(REF)
GE118-6D
GS570J-6C(2)
GS570J-6C(2)
GE118-6D (SEE NOTE 18)
GU10A-6D(3)
GS570J-6C(4)
C2 A8
-1577
-1576
LDW270M10042-13
LDW270M10044-11
LDW270M10043-11
-3002AFD-6(REF)
-3005AFD-6(REF)
-3003AFD-6(REF)
D5 A8 C2
-1287AFD-6(REF)
LDW280M16192-17
GS13AK-129-.090 (SEE DETAIL G ZONE 14C)
GT511D-6-110
SEE DETAIL B ZONE 13-C
IN
OUT
-3011ASO-4
LSC269-224-4(2)
-3012ASO-4
LDW280-52984-1
+Z27 BULKHEAD
D3 LDW280-52984-3
-3006ASF-4(REF)
LSC269-226-4(2)
-Y4.82(REF)
X239.400(REF)
LDW270-52204-3(REF)
GB511J-08-8 (4)
GS13AJ-115 (1)
MS21043L08 (4)
AN960C8L (8)
(SEE NOTE 32)
-Y10.500(REF)
GE118-4D
GS570J-4C(2) (SEE NOTE 18)
-3004AFD-6(REF)
-1140ASF-4 (REF)
LSC269-226-4(2)
LSC269-224-4(2)
-3010ASF-4(REF)
LDW270M10042-13
LDW270M10044-11
LDW270M10043-11
LDW280M16192-15 (ON-5)
GS13AK-129.090 (SEE DETAIL G ZONE 12B)
-1289AOD-4
B1
GT511D-4-85
-1290AOD-4
-1060ASF-4
-Y22.0
-3007ASF-4(REF)
LDW280-11527-17(REF)
GC12H-5
GB511J-08-1
AN960D8L(2)
MS21042L08
-Y17.25(REF)
-1822ASF-10
LDW270-28012-3 INSTALLATION(REF)
LSC269-206-20
LSC269-200-10(2)
-1826ASF-12
LSC269-234-2
-1824ASF-4
GS13AJ-127(2)
X229.18 (REF)
LDW280-28171-1 (REF)
-1571(ON-5)
-1570 (ON-5)
-3010ASF-4(REF)
A1 -1395ASF-4
LSC269-228-4
519266
LUBRICATE THDS. BODY & FAYING SURFACES (SEE NOTE 33)
E2
-1574 OX(REF)
-1575 FUEL(REF)
YO REF
X200.0(REF)
C6 C8 C7 C2 D3 D4 D11 D8 A1 A8

VIEW E-E (SEE NOTE 3)
(ZONE II A)
A1

LDW280-52350-3 INSTL.
-5 ASSY
-7 ASSY
VIEW LKG AFT FROM +Z 27.0

02/04 NAS 9-1100

8
7
6
5
4
LDW280M15025-13(REF)
.010-.030(2)
LDW270M10070-11(REF)
DETAIL J ZONE 7C
FOR INSTALLATION OF PRESSURIZATION SYSTEM SEE DWG LDW280-52351
-Y71.261(REF)
-X255.875 (REF)
519273(8) LUBRICATE THDS WITH DUPONT PR240 AC PER LSM14-6004 & TORQUE TO 12-15 IN. LBS (SEE NOTE 10 & 33)
519266
THDS, BODY & ...CES (SEE NOTE 33)
519269
NAS1003-11H (8)
LDW280M11380-11(4)
TANK COVER(REF)
LDW270M10070-11(TORQUE TO 70-90 FT. LBS)
LDW280M16195-11
LDW280M16193-15
NAS1081C3A6(2) (SEE DETAIL J ZONE 7C)
LDW280M15025-13(REF)
GS570M-2-221
-1574 OX(REF)
-1575 FUEL(REF)
SECT F-F (ZONE 6A & 11A) (TYP 2 PLACES)
E2
GC12H-4(4)
GB511J-08-2(4)
AN960D8L(8)
MS21042L08(4)
GC12H-20(4)
-1211 ASF-20 (REF)
-521 (REF)
-1416 ASF-4 (REF)
VIEW D-D (ZONE 7A)
A1
28012-3 ...ATION(REF)
LSC269-206-20
LSC269-200-10(2)
-1826 ASF-12
C7
LSC269-234-2
-1824 ASF-4
GS13AJ-127(2)
LSC280-7-53(REF)
-1822 ASF-10
LSC269-240-2
-1823 ASF-10
-1825 ASF-12
X229.418 (REF)
LSC269-200-12
-515
X228.0(REF)
E7
GB511J-3-5 (2)
AN960D10L (4)
MS21042L3(2)
SHIM AS REQD .188 MAX (SEE NOTE 34)
-28171-1 (REF)
-1571(ON-S)
-1570 (ON-S)
D11
-Y34.11(REF)
LSC269-365-1 (ON-S)
-538(ON-S)
LDW280-28206-1 (REF)
-Y36.2(REF)
X223.61
-Y42.2(REF)
X221.93(REF)
-Y38.25 -Y40.4 (REF) (REF)
-3019 ASF-4 (REF) (FUEL HI POINT BLEED)
LSC270-813-26(REF)
X220.58(REF)
-Y44.8(REF)
LDW280-28478(REF)
-3010ASF-4(REF)
-3010 ASF-4(REF) (FUEL ΔP TEST POINT)
X219.0(REF)
X218.35(REF)
-Y42.45(REF)
A1
-1395 ASF-4
LSC269-228-4
LSC269-224-4
LSC270-813-26 (REF)
GC12H-4
GB511J-08-1
AN960D8L(2)
MS21042L08
LSC269-206-20(3) (ON-S)
-1211 ASF-20 (ON-S)
-3007 ASF-4 (REF)
D3
-Y27.0
-1060 ASF-4
...280-11527-17(REF)
LSC270-826-13 (ON-S) (SEE NOTE 7 & 14)
-1416 ASF-4
A1
-11 (TRUE)(REF)
D (ZONE 5B)
LSC269-113-4
F (ZONE 7C)
LDW280M15025-13(REF)
-Y61.921(REF)
X202.764(REF)
X202.855(REF)
-1575 (ON-S)
D11
X201.035(REF)
F -Y73.527(REF)
X200.55(REF)
A3
-1482ASF-8(REF)
LSC270-701-1(REF)
-Y85.431(REF)
X199.469(REF)
X199.226 (REF)
A3
GC12H-12 (1)
GB511J-08-1 (1)
AN960D8L (2)
MS21042L08 (1)
LDW270-5...
D3
-1825ASF-4(REF)
-1824 ASF-4(REF)
-1826ASF-4(REF)
-1556(REF)
-1140 ASF-4(REF)
D3
GB511J-08-7 (4)
GS13AJ-110 (1)
MS21043L08 (4)
AN960C8L (8)
(SEE NOTE 32)
-515(REF)
X226.30 (REF)
-3007ASF-4
X223.61 (REF)
-538 (REF)
GC12H-8
GB511J-08-2
AN960D8L
MS21042L08
GC12H-4
GB511J-08-1
AN960D8L(2)
MS21042L08
B5
LDW 260-...
EPO BLEED P...
AN735D5
A4
GC12H-4(2)
GB511J-08-1(2)
AN960D8L(4)
MS21042L08(2)
-1211 ASF-20 (REF)
BOND LDW280M11366(REF) TO LDW280-52984-3 USING EPON934 PER LSP14-22500 ROOM TEMP CURE
-1060ASF-4(REF)
LSC269-205-4
2" MAX
+Z18.30 (REF)
AN815-4C
-3010ASF
-3019AS
LSC269-228-
+Z10.25(REF)
+Z27.0(REF)
-1058 ASF-4
LSC270-826-13 (REF)
-3006ASF-4
+Z13.718 (REF)
BOND LDW280-11920(REF) TO LDW280-52984-3 USING EPON934 PER LSP14-22500 ROOM TEMP CURE
-1416ASF-4(REF)
-1.5
...J-08-1
...D8L(2)
...42L08
8
7
6
5
4

03/04 NAS 9-1100

CODE IDENT NO. 26512
...W280-52350 SHEET 4

CODE IDENT NO. 26512
LDW280-52350 SHEET 4

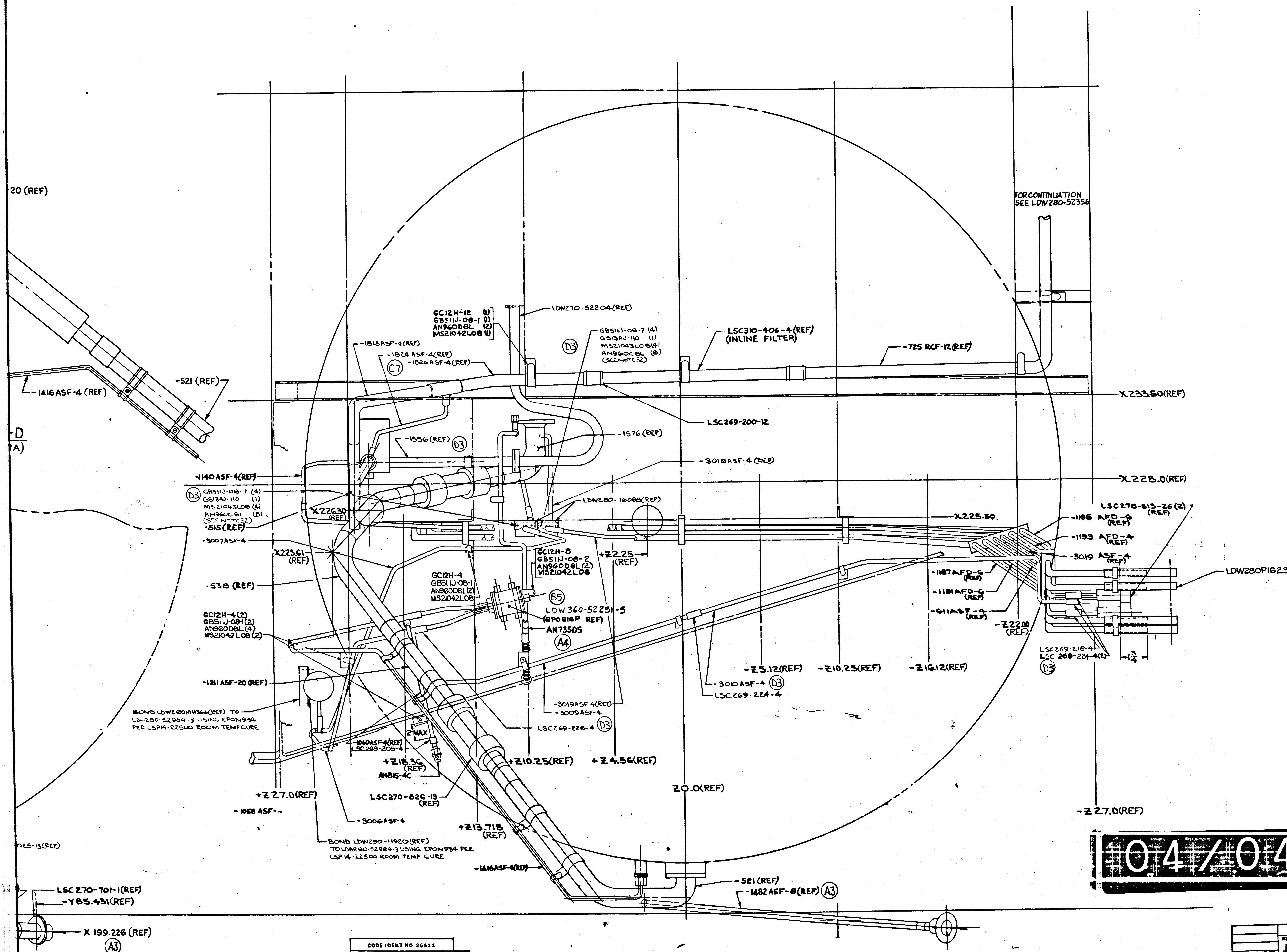

-20 (REF)
FOR CONTINUATION SEE LDW280-52356
GC12H-12 (1)
GB511J-08-1 (1)
AN960D8L (2)
MS21042L08 (1)
LDW270-52204(REF)
GB511J-08-7 (4)
GS13AJ-110 (1)
MS21043L08(4)
AN960C8L (8)
(SEE NOTE 32)
D3
LSC310-406-4(REF)
(INLINE FILTER)
-725 RCF-12(REF)
-1825ASF-4(REF)
-1824 ASF-4(REF)
C7
-1826ASF-4(REF)
-521 (REF)
-1416ASF-4 (REF)
-D
X233.50(REF)
LSC269-200-12
-1576 (REF)
-1556 (REF)
D3
-3018ASF-4(REF)
-1140ASF-4(REF)
X228.0(REF)
D3
GB511J-08-7 (4)
GS13AJ-110 (1)
MS21043L08 (4)
AN960C81 (8)
(SEE NOTE 32)
-515(REF)
X226.30
(REF)
LDW280-16088(REF)
X225.50
LSC270-813-26(2)
(REF)
-1195 AFD-6
(REF)
-1193 AFD-4
(REF)
-3019 ASF-4
(REF)
LDW280P16230-11(4)
-3007ASF-4
X223.61
(REF)
+Z2.25
(REF)
GC12H-8
GB511J-08-2
AN960D8L(2)
MS21042L08
-538 (REF)
GC12H-4
GB511J-08-1
AN960D8L(2)
MS21042L08
B5
LDW 360-52251-5
(GP0816P REF)
AN735D5
A4
-1187AFD-6
(REF)
-1181AFD-6
(REF)
-611ASF-4
(REF)
-Z22.00
(REF)
LSC269-218-4
LSC 268-224-4(2)
D3
1 3/4
GC12H-4(2)
GB511J-08-1(2)
AN960D8L(4)
MS21042L08(2)
-Z5.12(REF)
-Z10.25(REF)
-Z16.12(REF)
-3010ASF-4
D3
LSC269-224-4
-1211 ASF-20 (REF)
-3019ASF-4(REF)
-3009ASF-4
BOND LDW280M11366(REF) TO LDW280-52984-3 USING EPON934 PER LSP14-22500 ROOM TEMP CURE
LSC269-228-4
D3
2" MAX
-1060ASF-4(REF)
LSC269-205-4
+Z18.36
(REF)
AN815-4C
+Z10.25(REF)
+Z4.56(REF)
+Z27.0(REF)
Z0.0(REF)
-1058 ASF-
-3006ASF-4
LSC270-826-13
(REF)
-Z27.0(REF)
+Z13.718
(REF)
BOND LDW280-11920(REF) TO LDW280-52984-3 USING EPON934 PER LSP14-22500 ROOM TEMP CURE
-1416ASF-4(REF)
025-13(REF)
-521(REF)
-1482ASF-8(REF)
A3
LSC270-701-1(REF)
-Y85.431(REF)
X 199.226 (REF)
A3

MANUFACTURING OPERATIONS

UNLESS OTHERWISE SPECIFIED
NOTES CHECKED √ APPLY TO THIS DWG.

PART NUMBER AND ALL OTHER MARKINGS IN REGION MARKED ⊠ USE BOTH SIDES IF NECESSARY.	
FILLET AND INSIDE CORNER RADII TOLERANCES .016R TO .062R ± .010 .063R TO .250R ± .015 OVER .250R ± .030	
DEPTH SHOWN FOR TAPPED HOLES IS FULL THDS. 2-3 IMP THDS. BEYOND PERMISSIBLE.	
EXTERNAL THREAD LENGTH SHOWN INCLUDES 2 IMPERFECT THREADS MAX.	
DO NOT CADMIUM PLATE & PAINT HOLES OR SURFACES MARKED WITH DOUBLE ASTERISK.	
MISMATCH STEP OF ± .005 PERMISSIBLE DUE TO CHANGE OF CUTTERS AT INSIDE INTERSECTING SURFACES.	
DIAMETERS MARKED MUST BE CONCENTRIC WITHIN FULL INDICATOR READING	
HOLES MUST BE KEPT FREE OF CHROME PLATING SOLUTION.	
ALL DIMENSIONS SHOWN TO BE MET AFTER CADMIUM PLATING. THICKNESS OF PLATE .0003 MIN. TO .0005 MAX. MIN. THICKNESS TO BE .0002 ON THREADED AREAS. NO ALLOWANCE FOR PLATING IN HOLES	
125 √ SURFACE ROUGHNESS INCLUDING REAMED HOLES PER MIL-STD-10	
200 √ FOR ALL DRILLED HOLES	
REMOVE ALL BURRS. BREAK ALL EDGES .015-.031	
INSPECTION INFORMATION MINIMUM PERMISSIBLE AVERAGE EDGE DISTANCE MARKED IS	
SYMBOL √ DENOTES SURFACE TO BE MACHINED	
UNLESS OTHERWISE SPECIFIED TOLERANCE ON FLANGES IS ± 1/32	
LENGTHS OF AN, NAS & MS AL ALY RIVETS SHORTER THAN 1 INCH ARE NOT SPECIFIED.	
TOLERANCE ON LOFTED DELINEATIONS IS	

DWG SIZE 34 X

PRINTING INFO ONLY
FULL SIZE SHEET AREA (36 X)=
1/2 SIZE SHEET AREA (1/4 OF FULL)=
SQ. FT.
SQ. FT.

PRINT TRIM LINE

LDW280-52350 E

04/04

NAS 9-1100

CODE IDENT NO. 26512
LDW280-52350 SHEET 4

GRUMMAN AIRCRAFT ENGRG CORP., BETHPAGE, L. I., NEW YORK

MODEL OR END ITEM	SIZE	CODE IDENT NO.		
LEM2(32)	J	26512	LDW280-52350	E
	SCALE 1/2		SHEET 4	

⑤

4FK

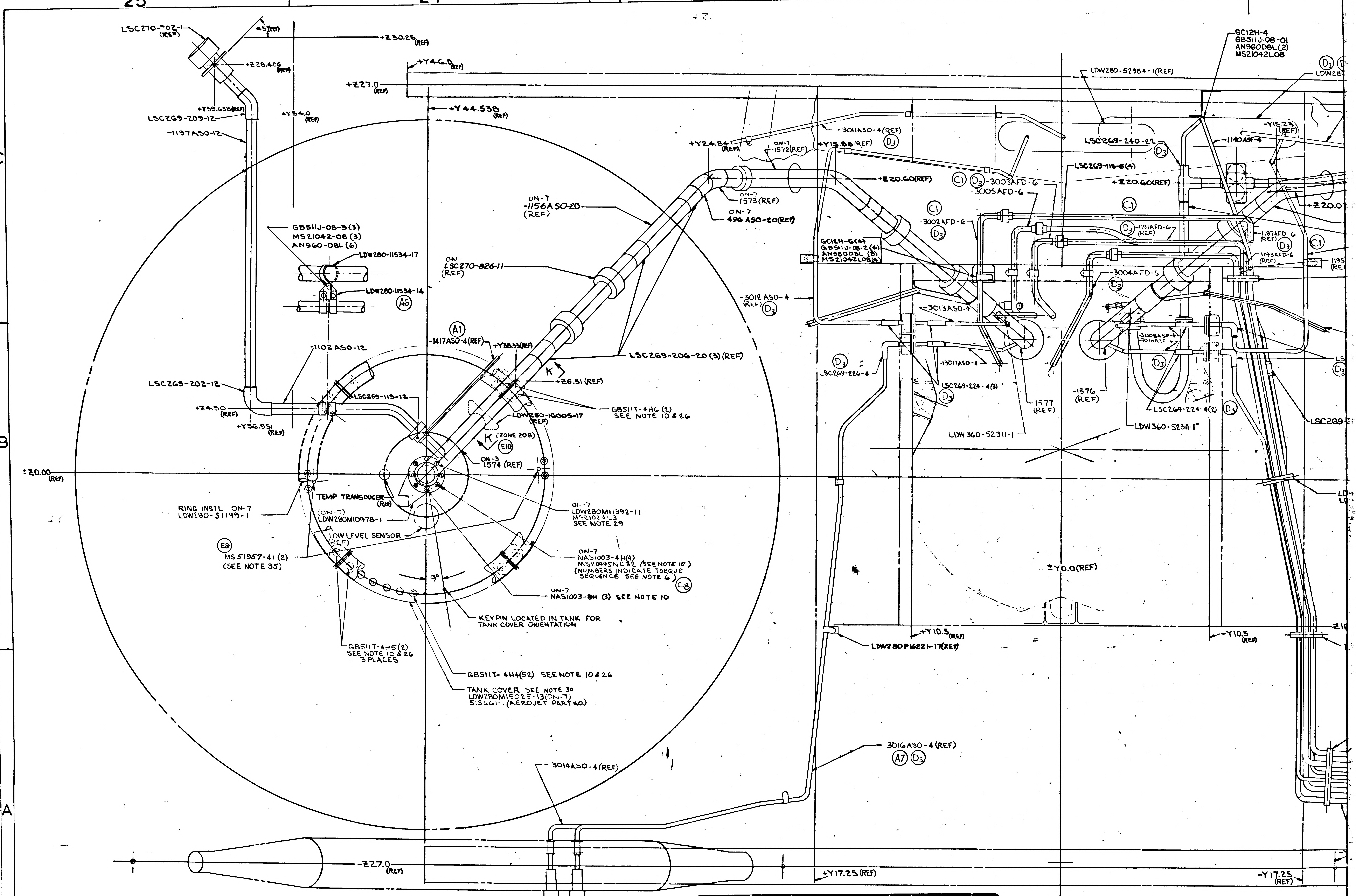
LSC270-702-1 (REF)
45° (REF)
+Z30.25 (REF)
+Z28.406 (REF)
+Y46.0 (REF)
+Z27.0 (REF)
+Y55.638 (REF)
LSC269-209-12
+Y54.0 (REF)
-1197AS0-12
+Y44.538 (REF)
GB511J-08-3 (3)
MS21042-08 (3)
AN960-DBL (6)
LDW280-11534-17
LDW280-11534-14
A6
ON-7 -1156AS0-20 (REF)
ON-7 LSC270-826-11 (REF)
A1
-1417AS0-4 (REF)
+Y38.33 (REF)
-1102AS0-12
LSC269-202-12
LSC269-113-12
+Z4.50 (REF)
+Y56.951 (REF)
K
+Z6.51 (REF)
LSC269-206-20 (3) (REF)
GB511T-4H6 (2) SEE NOTE 10 & 26
LDW280-16005-17 (REF)
K (ZONE 20B)
E10
ON-3 1574 (REF)
±Z0.00 (REF)
TEMP TRANSDUCER (REF)
(ON-7) LDW280M10978-1
RING INSTL ON-7 LDW280-51199-1
LOW LEVEL SENSOR (REF)
E8
MS51957-41 (2) (SEE NOTE 35)
ON-7 LDW280M11392-11 MS21024L3 SEE NOTE 29
ON-7 NAS1003-4H(4) MS20995NC32 (SEE NOTE 10) (NUMBERS INDICATE TORQUE SEQUENCE SEE NOTE 6)
C8
ON-7 NAS1003-8H (3) SEE NOTE 10
9°
KEYPIN LOCATED IN TANK FOR TANK COVER ORIENTATION
GB511T-4H5 (2) SEE NOTE 10 & 26 3 PLACES
GB511T-4H4 (52) SEE NOTE 10 & 26
TANK COVER SEE NOTE 30 LDW280M15025-13 (ON-7) 515661-1 (AEROJET PART NO.)
-3014AS0-4 (REF)
-Z27.0 (REF)
+Y24.84 (REF)
ON-7 -1572 (REF)
-3011AS0-4 (REF) D3
+Y15.88 (REF) D3
ON-7 1573 (REF)
ON-7 -496 AS0-20 (REF)
+Z20.60 (REF)
C1 D3 -3003AFD-6
-3005AFD-6
-3002AFD-6 C1 D3
GC12H-6 (4) GB511J-08-2 (4) AN960DBL (8) MS21042L08 (4)
-3012AS0-4 (REF) D3
-3013AS0-4
D3 LSC269-226-4
-13017AS0-4
LSC269-224-4 (3) D3
1577 (REF)
LDW360-52311-1
LDW280-52984-1 (REF)
LSC269-240-22 D3
LSC269-118-6 (4)
+Z20.60 (REF)
C1
D3 -1191AFD-6 (REF)
-3004AFD-6 D3
-3008ASF-4 -3018ASF-4
D3
-1576 (REF)
LSC269-224-4 (2) D3
LDW360-52311-1
±Y0.0 (REF)
+Y10.5 (REF)
LDW280P16221-17 (REF)
-Y10.5 (REF)
3016AS0-4 (REF) A7 D3
+Y17.25 (REF)
-Y17.25 (REF)
GC12H-4 GB511J-08-01 AN960DBL (2) MS21042L08
D3
-Y15.23 (REF)
-1140ASF-4
-1187AFD-6 (REF) D3
-1193AFD-6 (REF)
C1
+Z20.0
LSC269-

01/02

NAS 9-1100

VIEW LOOKING UP

CODE IDENT NO. 26512

LDW280-52350

5

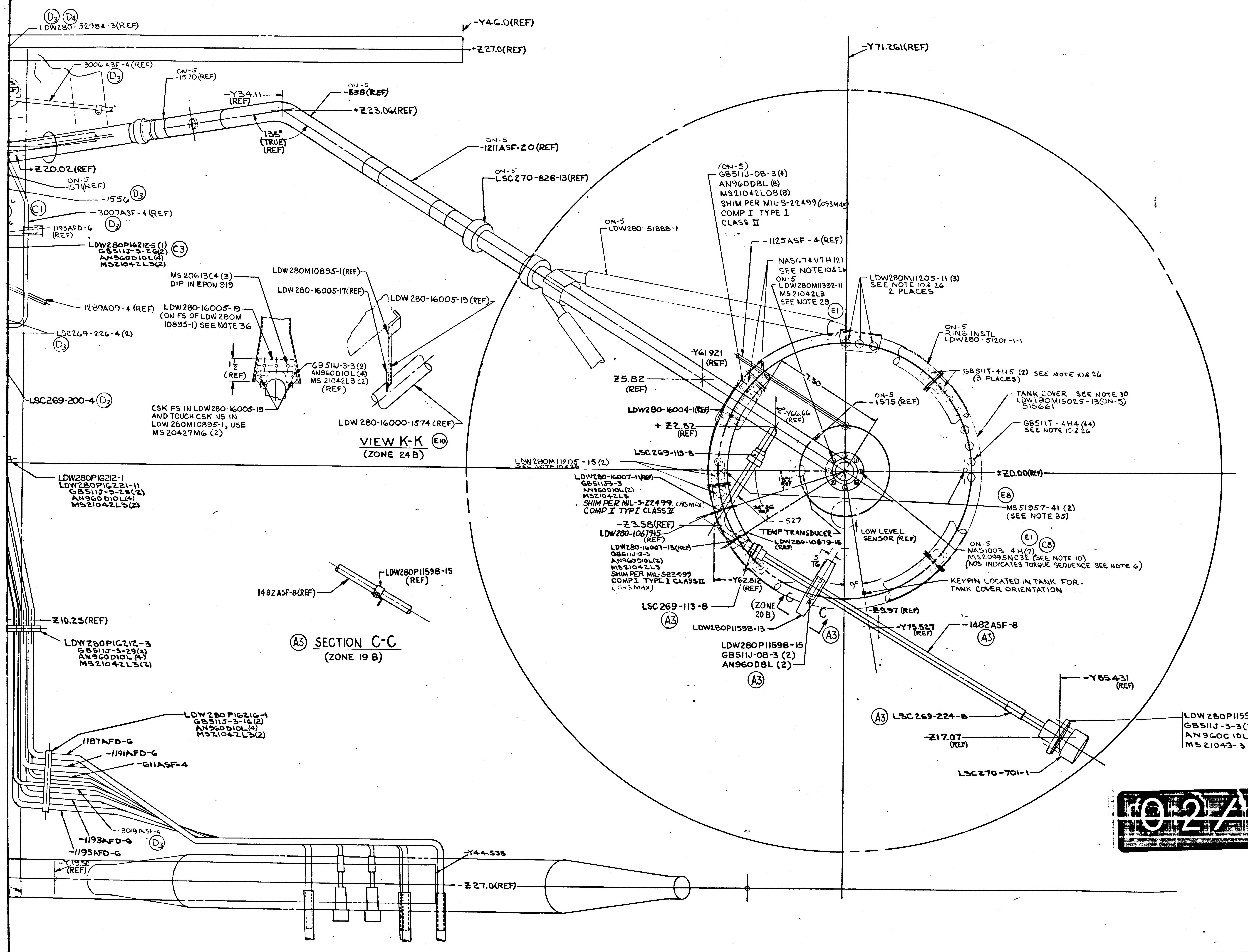
21
20
19
18
17
D3 D4
LDW280-52984-3(REF)
-Y46.0(REF)
+Z27.0(REF)
3006 ASF-4(REF)
D3
ON-5
-1570(REF)
-Y34.11
(REF)
ON-5
-538(REF)
+Z23.06(REF)
135°
(TRUE)
(REF)
ON-5
-1211ASF-20(REF)
+Z20.02(REF)
ON-5
-1571(REF)
-1556 D3
ON-5
LSC270-826-13(REF)
C1
-3007ASF-4(REF)
D3
1195AFD-6
(REF)
LDW280P16212-5 (1)
GB511J-3-26(2)
AN960D10L(4)
MS21042L3(2)
C3
ON-5
LDW280-51888-1
MS 20613C4 (3)
DIP IN EPON 919
LDW280M10895-1(REF)
LDW280-16005-17(REF)
LDW 280-16005-19 (REF)
1289A09-4 (REF)
LDW280-16005-19
(ON FS OF LDW280M
10895-1) SEE NOTE 36
LSC269-226-4(2)
D3
1 1/2
(REF)
GB511J-3-3(2)
AN960D10L(4)
MS 21042L3 (2)
(REF)
LSC269-200-4 D3
CSK FS IN LDW280-16005-19
AND TOUCH CSK NS IN
LDW280M10895-1, USE
MS 20427M6 (2)
LDW 280-16000-1574 (REF)
VIEW K-K E10
(ZONE 24B)
LDW280P16212-1
LDW280P16221-11
GB511J-3-28(2)
AN960D10L(4)
MS21042L3(2)
1482 ASF-8(REF)
LDW280P11598-15
(REF)
Z10.25(REF)
LDW280P16212-3
GB511J-3-29(2)
AN960D10L(4)
MS21042L3(2)
A3 SECTION C-C
(ZONE 19 B)
LDW280P16216-1
GB511J-3-16(2)
AN960D10L(4)
MS21042L3(2)
1187AFD-6
-1191AFD-6
-611ASF-4
-3019ASF-4
-1193AFD-6
D3
-1195AFD-6
-Y19.50
(REF)
-Y44.538
-Z27.0(REF)
(ON-5)
GB511J-08-3(4)
AN960D8L (8)
MS21042L08(8)
SHIM PER MIL-S-22499 (.093MAX)
COMP I TYPE I
CLASS II
-1125ASF-4(REF)
NAS674V7H(2)
SEE NOTE 10&26
ON-5
LDW280M11392-11
MS 21042L3
SEE NOTE 29
E1
-Y71.261(REF)
LDW280M11205-11 (3)
SEE NOTE 10& 26
2 PLACES
ON-5
RING INSTL
LDW280-51201-1-1
-Y61.921
(REF)
Z5.82
(REF)
7.30
GB511T-4H5 (2) SEE NOTE 10&26
(3 PLACES)
ON-5
-1575 (REF)
TANK COVER SEE NOTE 30
LDW280M15025-13(ON-5)
515661
LDW280-16004-1(REF)
-Y66.66
(REF)
+Z2.82
(REF)
GB511T-4H4 (44)
SEE NOTE 10 & 26
LSC269-113-8
LDW280M11205-15 (2)
SEE NOTE 10&26
18°2'
REF
±Z0.00(REF)
LDW280-16007-11(REF)
GB511J-3-3
AN960D10L(2)
MS21042L3
SHIM PER MIL-S-22499 (.093 MAX)
COMP I TYPI CLASS II
32°36'
REF
E8
MS51957-41 (2)
(SEE NOTE 35)
-Z3.58(REF)
LDW280-1067915
(REF)
-527
TEMP TRANSDUCER
LDW280-10679-15
(REF)
LOW LEVEL
SENSOR (REF)
E1 C8
LDW280-16007-13(REF)
GB511J-3-3
AN960D10L(2)
MS21042L3
SHIM PER MIL-S22499
COMP I TYPE I CLASS II
(.093 MAX)
ON-5
NAS1003-4H(7)
MS20995NC32 (SEE NOTE 10)
(NO'S INDICATES TORQUE SEQUENCE SEE NOTE 6)
5/16
-Y62.812
(REF)
9°
KEYPIN LOCATED IN TANK FOR.
TANK COVER ORIENTATION
LSC269-113-8
A3
(ZONE
20 B)
C
C
-Z9.97 (REF)
LDW280P11598-13
A3
-Y73.527
(REF)
-1482ASF-8
A3
LDW280P11598-15
GB511J-08-3 (2)
AN960D8L (2)
A3
-Y85.431
(REF)
A3 LSC269-224-8
LDW280P11598-11 A5
GB511J-3-3(3)
AN960C10L(6)
MS21043-3(3)
-Z17.07
(REF)
LSC270-701-1
A
B
C

MANUFACTURING OPERATIONS
UNLESS OTHERWISE SPECIFIED
NOTES CHECKED √ APPLY TO THIS DWG.

PART NUMBER AND ALL OTHER MARKINGS IN REGION MARKED ⊠ USE BOTH SIDES IF NECESSARY.

FILLET AND INSIDE CORNER RADII TOLERANCES
.016R TO .062R ± .010
.063R TO .250R ± .015
OVER .250R ± .030

DEPTH SHOWN FOR TAPPED HOLES IS FULL THDS. 2-3 IMP THDS. BEYOND PERMISSIBLE.

EXTERNAL THREAD LENGTH SHOWN INCLUDES 2 IMPERFECT THREADS MAX.

DO NOT CADMIUM PLATE & PAINT HOLES OR SURFACES MARKED WITH DOUBLE ASTERISK.

MISMATCH STEP OF ± .005 PERMISSIBLE DUE TO CHANGE OF CUTTERS AT INSIDE INTERSECTING SURFACES.

DIAMETERS MARKED MUST BE CONCENTRIC WITHIN FULL INDICATOR READING

HOLES MUST BE KEPT FREE OF CHROME PLATING SOLUTION.

ALL DIMENSIONS SHOWN TO BE MET AFTER CADMIUM PLATING. THICKNESS OF PLATE .0003 MIN. TO .0005 MAX. MIN. THICKNESS TO BE .0002 ON THREADED AREAS. NO ALLOWANCE FOR PLATING IN HOLES

125 SURFACE ROUGHNESS INCLUDING REAMED HOLES PER MIL-STD-10

200 FOR ALL DRILLED HOLES

REMOVE ALL BURRS. BREAK ALL EDGES .015-.031

INSPECTION INFORMATION MINIMUM PERMISSIBLE AVERAGE EDGE DISTANCE MARKED IS

SYMBOL √ DENOTES SURFACE TO BE MACHINED

UNLESS OTHERWISE SPECIFIED TOLERANCE ON FLANGES IS ± 1/32

LENGTHS OF AN, NAS & MS AL ALY RIVETS SHORTER THAN 1 INCH ARE NOT SPECIFIED.

TOLERANCE ON LOFTED DELINEATIONS IS

DWG SIZE 34 X

PRINTING INFO ONLY
FULL SIZE SHEET AREA (36 X) =
1/2 SIZE SHEET AREA (1/4 OF FULL) =
SQ. FT.
SQ. FT.

PRINT TRIM LINE

LDW280-52350 E

LDW280-52350 E

02/02

NAS 9-1100

	GRUMMAN AIRCRAFT ENGRG CORP., BETHPAGE, L. I., NEW YORK			
LEM 2(32)	SIZE J	CODE IDENT NO. 26512	LDW 280-52350	E
MODEL OR END ITEM	SCALE 1/2		SHEET 5.00	

(E)

2 FR

*

GRUMMAN AIRCRAFT ENGINEERING CORP.
CODE IDENT NO. 26512
ENGINEERING ORDER

ENG 32.1 REV 3-65

DWG. NO. LEO 280-
EO NO. 314
CONTROL INFO NO. LDW280-A2087

ON SH 3 OF THE FOLLOWING DWGS

DWG No. -	CHG NO	DWG No.	CHG NO	DWG NO	CHG NO
✓ LDW280-52350	A2	LDW280-52354	A1	LDW280-52358	A1
52351	A2	-52355	A2	-52359	A3
52352	A1	-52356	A1	LDW 280-52360	A2
LDW 280-52353	A1	LDW280 -52357	B2		

ADD THE FOLLOWING NOTE

‡ SUBSTITUTION OF NAS1132V*, AN525-832R* OR AN525-832-* BOLTS FOR THE GB511J-08-* BOLT IS PERMISSIBLE

‡ USE NEXT AVAILABLE NUMBER.

THIS IS A RE-ISSUE OF LEO 280-314 ~ INCOMPLETE CHANGE NO'S ON ORIG ISSUE

(5)

DETAIL SPEC REQ ☐ CL II ENGRG CHG ☐ CL I ENGRG CHG ☐

REASON FOR EO: HARDWARE NOT AVAILABLE

DESCRIPTION OF EO: ON SH 3 ADDED NOTE ‡ (‡)

GAEC EO RELEASE: 10/1

MODEL	EFFECTIVITY		
	PROCURING ACTIVITY NO.	GAEC UNIT NO.	SUB CONTR UNIT NO.
LM		LM-2 (32)	

DRAWING CHANGE REQD: ✓ REVISE DWG / RECORD EO

DISPOSITION OF PARTS: NOT REWORK / REQD SCRAP

APPROVED BY	JW	—	—	—	JW			
✓ DATE	10-11-66				10-11		10-12-66	10/15/66
	VDI	SUPPORT	RELIAB. GROUP	GROUP LEADER	STRESS GROUP	LIAISON ENGRG	PROJ ENGRG	

PRIORITY: C
DRAWING TITLE: LINES INSTALLATIONS
DRAWING NO: LEO-280-
EO NO. 314

ISSUED BY C.H. COHEN X7033
SECTION EQUIP LINES (VDI)
GROUP NO. 332
PL 35

01

NAS 9-1100

GRUMMAN AIRCRAFT ENGINEERING CORP.
CODE IDENT NO. 26512
*
ENGINEERING ORDER

ENG 22.2 REV 3-66

DWG. NO. LDW280-52350
EO NO. A3
CONTROL INFO NO. LDW280A-3082

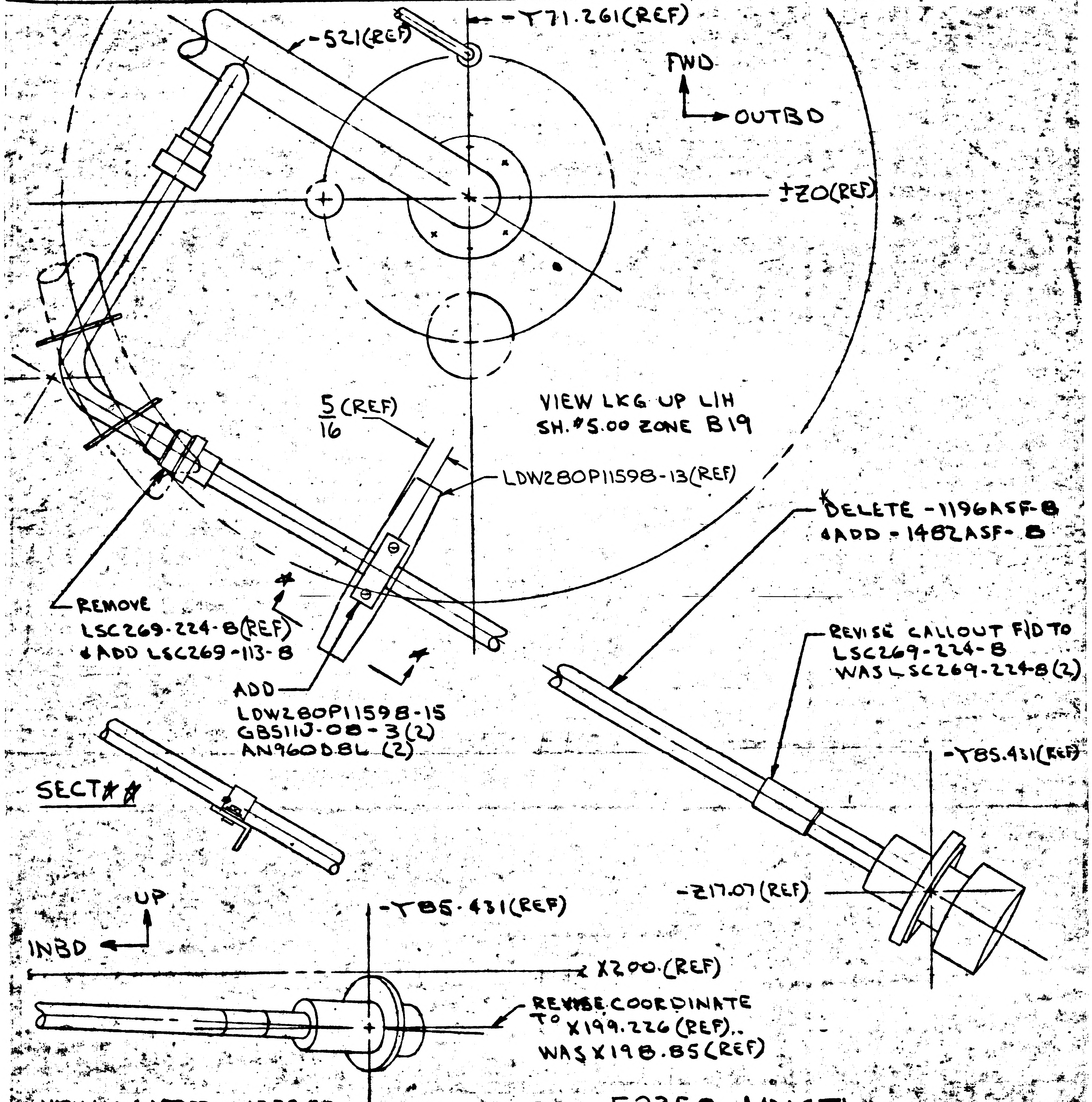
-521(REF)
-Y71.261(REF)
FWD
OUTBD
+Z0(REF)
VIEW LKG UP LIH
SH.#5.00 ZONE B19
5/16(REF)
LDW280P11598-13(REF)
*DELETE -1196ASF-8
&ADD -1482ASF-8
REMOVE
LSC269-224-8(REF)
&ADD LSC269-113-8
ADD
LDW280P11598-15
GB5113-08-3(2)
AN960D8L (2)
REVISE CALLOUT F/D TO
LSC269-224-8
WAS LSC269-224-8(2)
-Y85.431(REF)
SECT*#
-Z17.07(REF)
UP
INBD
-Y85.431(REF)
X200.(REF)
REVISE COORDINATE
TO X199.226(REF).
WAS X198.85(REF)

VIEW LKG AFT, FROM +Z27.00
SH. ~~#4.00~~ ZONE A5

LDW280-52350-1INSTL

*ALL TUBE NUMBERS ARE DASH NUMBERS OF LDW280-16000

NOTES
1. REVISE BIM IN ACCORDANCE WITH EO
2. REVISE ALL VIEWS IN ACCORDANCE WITH EO
*#3 USE NEXT AVAILABLE SECTION LETTER

DESCRIPTION OF EO CONT.
REVISED CALLOUT LSC269-224-8 WAS LSC269-224-8(2) ON SH#4.00 REVISED COORDINATE, X199.226(REF) WAS X198.85 ADDED SECT * *

DETAIL SPEC REQ | CL II ENGRG CHG | CL I ENGRG CHG

REASON FOR EO: NEW LINE REQD. DUE TO RELOCATION OF FILL & DRAIN DISCONNECT

DESCRIPTION OF EO: ON SH #5.00 REMOVED LSC269-224-8 (REF) ADDED LSC269-113-8 ADDED LDW280P11598-15, GB5113-08-3(2), AN960D8L(2) DELETED -1196ASF-8 & ADDED -1482ASF-8

GAEC EO RELEASE: FR 11/17/66

MODEL	EFFECTIVITY PROCURING ACTIVITY NO.	GAEC UNIT NO.	SUB CONTR UNIT NO.
LM		LM-2(32)	

DRAWING CHANGE REQD: REVISE DWG ✓ | RECORD EO
DISPOSITION OF PARTS: REWORK ✓ | SCRAP

APPROVED BY	JW	—	—	—	CW GW		emc	
DATE	11/9/66				11-9-66		11-11-66	11-17-66
1	VDI	SUPPORT	REL MP GROUP	GROUP LEADER	STRESS GROUP	LIAISON ENGRG	PROJ ENGRG	GOVT

PRIORITY: C
DRAWING TITLE: LINES INSTALLATION PROPELLANT FEED SYS R15
DRAWING NO. LDW280-52350
EO NO. A3

ISSUED BY ED BIANCHI X7033 SECTION EQUIP LINES GROUP NO. 332 PL 35

01 NAS 9-1100

ENG 32.1 REV 3-65

GRUMMAN AIRCRAFT ENGINEERING CORP.
CODE IDENT NO. 26512
ENGINEERING ORDER

DWG NO. LDW280-52350
EO NO. A4
CONTROL INFO NO. LDW280A 3644

ON LDW280-52350-1 INSTL

IN FIELD OF DWG (ZONE B4) & B/M REMOVE AN737TW22(1) AND ADD AN735D5(1)

IN FIELD OF DWG (ZONE B14) & BM REMOVE AN737TW22(1) AND ADD AN735D7(1)

5

DETAIL SPEC REQ ☐ CL II ENGRG CHG ☐ CL I ENGRG CHG ☐

REASON FOR EO: EXISTING CLAMP TOO LARGE

DESCRIPTION OF EO: TO -1 AND B/M REMOVED AN737TW22(2) ADDED AN735D5(1) & AN735D7(1)

GAEC EO RELEASE: LE 11/30

MODEL	PROCURING ACTIVITY NO.	GAEC UNIT NO	SUB CONTR UNIT NO
LM		LM2(32)	

DRAWING CHANGE REQD: REVISE DWG ✓ RECORD EO
DISPOSITION OF PARTS: REWORK ✓ SCRAP

APPROVED BY	Jw	—	—	—	EW Bw		RME	
DATE	11/22/66				11-23		11-29-66	11-29-66
1	VDI	SUPPORT	RELIAB GROUP	GROUP LEADER	STRESS GROUP	LIAISON ENGRG	PROJ ENGRG	GOVT

PRIORITY: C
DRAWING TITLE: LINES INSTALLATION PROPELLANT FEED SYSTEN ASCENT STAGE
DRAWING NO. LDW280-52350
EO NO A4

ISSUED BY GIRARDIN X7033/COMMISSO SECTION EQUIP LINES VDI GROUP NO. 332 PL 35

01 NAS 9-1100

ENG 32.1 REV 3-65

GRUMMAN AIRCRAFT ENGINEERING CORP.
CODE IDENT NO. 26512
ENGINEERING ORDER

DWG. NO. LDW280-52350
EO NO. A5
CONTROL INFO NO. LM-5-9868

FOR -1 INSTL:
IN B/M & FLD OF DWG LDW280M11159-1 S/B LDW280P11598-11.

5

DETAIL SPEC REQ		CL II ENGRG CHG		CL I ENGRG CHG	

REASON FOR EO
LDW280M11159-1 CANCELLED BY DCRF NO. 323-1246.

DESCRIPTION OF EO
FOR -1 INSTL:
LDW280P11598-11 WAS LDW280M11159-1.

GAEC EO RELEASE

MODEL	EFFECTIVITY: PROCURING ACTIVITY NO.	GAEC UNIT NO.	SUB CONTR UNIT NO.
LM		LM-2 (32)	

DRAWING CHANGE REQD: REVISE DWG	RECORD EO	DISPOSITION OF PARTS: REWORK	SCRAP
✓		✓	

APPROVED BY		—	—	—				
DATE	12/2/66				12-8-66	12-8-66	12-12-66	12-8-66
1	VDI	SUPPORT	RELIAB. GROUP	GROUP LEADER	STRESS GROUP	LIAISON ENGRG	PROJ ENGRG	~~GOVT~~

PRIORITY	DRAWING TITLE	DRAWING NO.	EO NO.
C	LINES INSTL PROPELLANT FEED SYSTEM - A/S	LDW280-52350	A5

ISSUED BY LIAISON J.MCGILL/CCA X6454 SECTION VDI GROUP NO. 335 PL 5

01 NAS 9-1100

ENG 32.1 REV 3-65

GRUMMAN AIRCRAFT ENGINEERING CORP.
CODE IDENT NO. 26512
ENGINEERING ORDER

DWG. NO. LDW280-52350
EO NO. A6
CONTROL INFO NO. LM-5-11333

IN F/D & B/M:

LDW280-11534-13 S/B LDW280-11534-14

REVISE PICTURE TO AGREE

RELEASED BY LIAISON

6

DETAIL SPEC REQ		CL II ENGRG CHG		CL I ENGRG CHG	

REASON FOR EO	DESCRIPTION OF EO	GAEC EO RELEASE
-13 INCORRECTLY DETAILED	ON-1: LDW280-11534-14 WAS-13	CE

MODEL	EFFECTIVITY		
	PROCURING ACTIVITY NO.	GAEC UNIT NO.	SUB CONTR UNIT NO.
LM		LM-2(32)	

DRAWING CHANGE REQD		DISPOSITION OF PARTS										
				APPROVED BY	WT			~	mjm	BH	RMC	
✓		✓		DATE	12/9/66			~	12-9-66	12-9-66	12-15-66	12-10-66
REVISE DWG	RECORD EO	REWORK	SCRAP	I	VDI	SUPPORT	RELIAB. GROUP	GROUP LEADER	STRESS GROUP	LIAISON ENGRG	PROJ ENGRG	~~GOVT~~

PRIORITY	DRAWING TITLE	DRAWING NO.	EO NO.
C	LINES INSTL.- PROPELLANT FEED SYS, A/S	LDW280-52350	A6

ISSUED BY F. STEINMETZ/P. GRUND x6454 12-9-66 SECTION V.D.I. GROUP NO. 335 PL 5

01

NAS 9-1100

ENG 32.1 REV 3-65

GRUMMAN AIRCRAFT ENGINEERING CORP.
CODE IDENT NO. 26512
ENGINEERING ORDER

DWG. NO. LDW280-52350
EO NO. A7
CONTROL INFO NO. LM-5-11392

IN F/D ZONE 21A SH. 5.00 -1208AS0-4 S/B -1679AS0-4

IN F/D ZONE 22B SH. 4.00 NAS654V2(8) S/B NAS654V9(8)

RELEASED BY LIAISON

NOTES
DO NOT INC ON DWG
1. NO PICTURE CHANGE
2. REVISE ALL VIEWS & B/M IN ACCORDANCE WITH EO
3. TUBE NUMBERS ARE DASH NUMBERS OF LDW280-16000

POST FEAT

DETAIL SPEC REQ		CL II ENGRG CHG		CL I ENGRG CHG	

REASON FOR EO	DESCRIPTION OF EO	GAEC EO RELEASE
REVISE FIELD OF DWG	ON-1 INSTL IN F/D ZONE 21A SH. 5.00 -1208AS0-4 S/B -1679AS0-4 IN F/D ZONE 22B SH. 4.00 NAS654V2(8) S/B NAS654V9(8)	Ⓡ 5 C UE

MODEL	EFFECTIVITY		
	PROCURING ACTIVITY NO.	GAEC UNIT NO.	SUB CONTR UNIT NO.
LM		LM-2	

DRAWING CHANGE REQD		DISPOSITION OF PARTS	
REVISE DWG	RECORD EO	REWORK	SCRAP
✓		✓	

APPROVED BY	WT				RH	CH	RMC (W)	RP
DATE	12/13/66				12-13-66	12-13	12-20-66	12/13/66
1	VDI	SUPPORT	RELIAB. GROUP	GROUP LEADER	STRESS GROUP	LIAISON ENGRG	PROJ ENGRG	[illegible]

PRIORITY	DRAWING TITLE	DRAWING NO.	EO NO.
C	LINES INSTL PROPELLANT FEED SYSTEM ASCENT STAGE	LDW280-52350	A7

ISSUED BY ED BIANCHI X7033
SECTION EQUIPLINES
GROUP NO. 332
PL 35

0 1

NAS 9-1100

GRUMMAN AIRCRAFT ENGINEERING CORP.
CODE IDENT NO. 26512
ENGINEERING ORDER

ING 33.2 REV 3-65

DWG. NO. LDW280-52350 | EO NO. A8
CONTROL INFO NO. LM-5 · 11454

*

IN ZONE 9B SHT 4 - ADD SPACERS & SEAL AND REVISE BOLT CALLOUT AS SHOWN

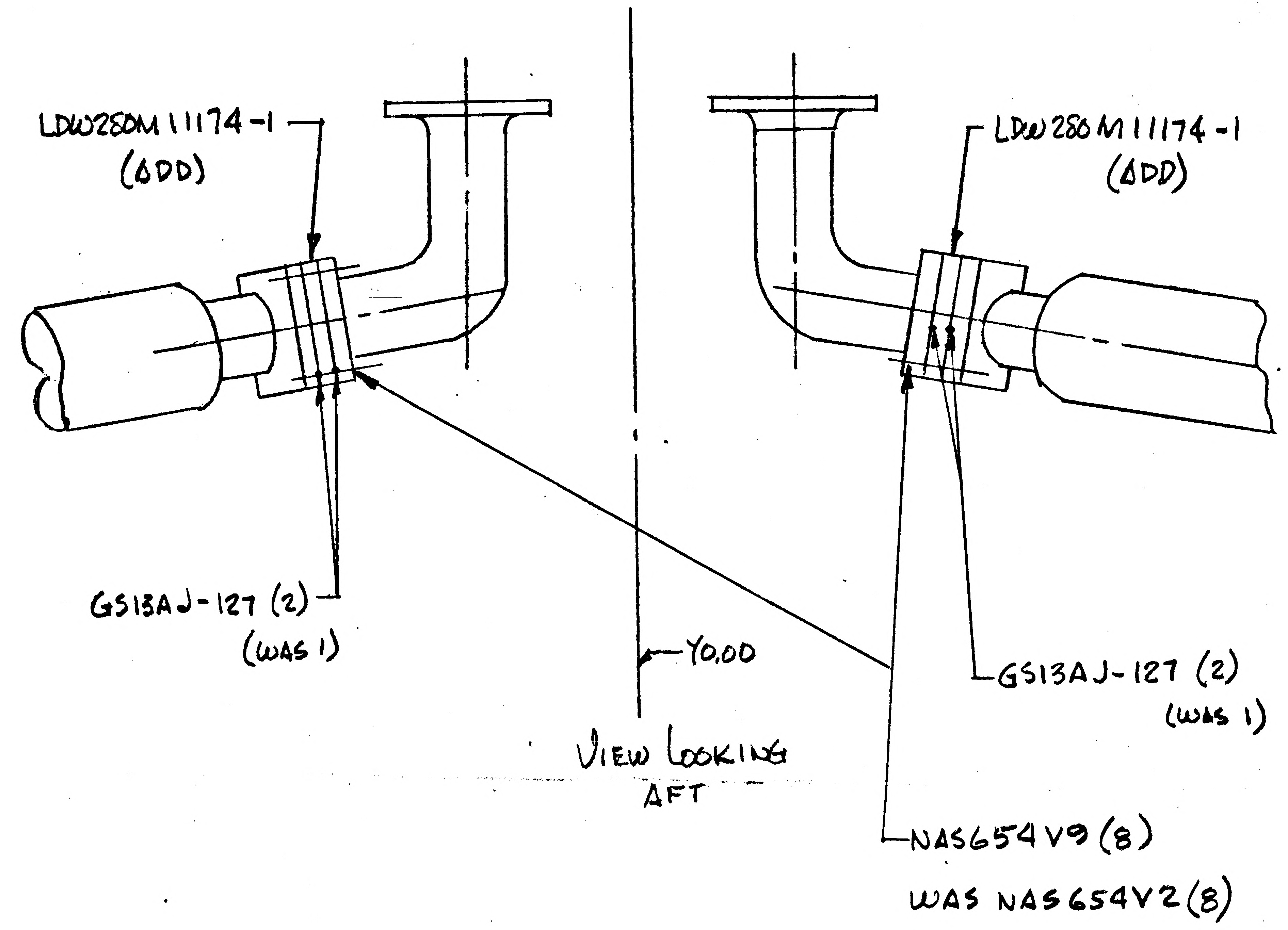

IN F/O ZONE 21A SH 5

1208A50-4 S/B 1679A50-4

RELEASED BY LIAISON

NOTE -
1- REVISE ALL VIEWS & B/M IN ACCORDANCE WITH EO
2- TUBE NUMBERS ARE DASH NUMBERS OF LDW 280-16000
3- PICTURE CHANGE

6

DETAIL SPEC REQ ☐ CL II ENGRG CHG ☐ CL I ENGRG CHG ☐

REASON FOR EO: SPACERS REQUIRED TO ENSURE ADEQUATE BELLOWS CAPABILITY UNDER PRESSURE. TO CHG TUBE CALLOUT

DESCRIPTION OF EO: ON-1 INSTL ADDED LDW280M11174-1 (2), GS13AJ-127(2), NAS654V2 (8) S/B NAS654V9(8); 1208A50-4 S/B 1679A50-4

GAEC EO RELEASE

MODEL	PROCURING ACTIVITY NO.	GAEC UNIT NO.	SUB CONTR UNIT NO.
LM		LM-2 (32)	

DRAWING CHANGE REQD: REVISE DWG ✓ RECORD EO
DISPOSITION OF PARTS: REWORK ✓ SCRAP

APPROVED BY		SUPPORT	RELIAB. GROUP	GROUP LEADER	STRESS GROUP	LIAISON ENGRG	PROJ ENGRG
				-		CH	
DATE	12/17/66			-	12/17	12-17	12-20-66
5	VDI						

PRIORITY: C
DRAWING TITLE: LINES INSTL PROPELLANT FEED SYSTEM ASCENT STAGE
DRAWING NO.: LDW280-52350
EO NO.: A8

ISSUED BY VALENTINE 12/17/66 X1441 SECTION VDI (PHILLIPS) GROUP NO. 335 PL 35

01 NAS 9-1100

ENG 32.1 REV 3-65

GRUMMAN AIRCRAFT ENGINEERING CORP.
CODE IDENT NO. 26512
ENGINEERING ORDER

DWG. NO. LDW280-52350 | EO NO. A10
CONTROL INFO NO. LM-5-12014

ON-1 INSTL.

IN FLD/DWG & B/M

LDW270M10007-1(2) S/B LDW270M10007-79 (1)(FUEL)

ADD LDW270M10015-81 (1)(OX.)

RELEASED BY LIAISON

6

DETAIL SPEC REQ	☐	CL II ENGRG CHG	☐	CL I ENGRG CHG	☐

REASON FOR EO
ORIFICE DETERMINED AT COLD FLOW TEST

DESCRIPTION OF EO
ON-1
IN FLD & B/M LDW270M10007-79 (1)(FUEL) WAS LDW270M10007-1 (2); ADDED LDW270M10015-81 (1)(OX.)

② GAEC C EO RELEASE
JK

MODEL	EFFECTIVITY PROCURING ACTIVITY NO.	GAEC UNIT NO.	SUB CONTR UNIT NO.
LM		LM-2 (32)	

DRAWING CHANGE REQD		DISPOSITION OF PARTS	
✓		✓	
REVISE DWG	RECORD EO	REWORK	SCRAP

APPROVED BY	JW	—	—	—	DV	DV		
DATE	12/30/66				1/4/67	1/4/67	12-30-66	12/17/66
5	VDI	SUPPORT	RELIAB. GROUP	GROUP LEADER	STRESS GROUP	LIAISON ENGRG	PROJ ENGRG	

PRIORITY	DRAWING TITLE	DRAWING NO.	EO NO.
C	LINES INSTL. PROPELLANT FEED SYSTEM ASCENT STAGE	LDW280-52350	A10

ISSUED BY LIAISON, P. HUSTED, 6452 SECTION V DI (EQUIP LINE) GROUP NO. 332 PL 35

01 NAS 9-1100

GRUMMAN AIRCRAFT ENGINEERING CORP.
CODE IDENT NO. 26512
ENGINEERING ORDER

ENG 32.1 REV 3-65

DWG NO. LDW280-52350
EO NO. B2
CONTROL INFO NO. LDW280A-4516

THIS IS A REVISION OF EO A10 (LM-5-12014)

ON-1
F/D & B/M REMOVE LDW270M10007-79 (FUEL) & LDW 270M 10015-81 (OXID)
ADD GP10M-89 (FUEL) (1)
GP10M-207 (OXID) (1)

ADD NOTE ✱ GP10M-89 IS IDENTICAL TO LDW270M10007-79
GP10M-207 IS IDENTICAL TO LDW270M10015-81

✱ NEXT CONSECUTIVE NO

DETAIL SPEC REQ	☐	CL II ENGRG CHG	☐	CL I ENGRG CHG	☐	✓

REASON FOR EO	DESCRIPTION OF EO	GAEC EO RELEASE
LDW270M10007 REPLACED BY GP10M (REF DCRF 323-283)	REF EO A10 ON-1 REMOVED LDW270M10007(2). ADDED GP10M-89(1) & GP10M-207 (1). ADDED NOTE ✱	C 9 F/K 12/22/6

MODEL	EFFECTIVITY: PROCURING ACTIVITY NO.	EFFECTIVITY: GAEC UNIT NO.	EFFECTIVITY: SUB CONTR UNIT NO.
LM		LM 2 (32)	

DRAWING CHANGE REQD: REVISE DWG	DRAWING CHANGE REQD: RECORD EO	DISPOSITION OF PARTS: REWORK	DISPOSITION OF PARTS: SCRAP
✓		✓	

	VD1	SUPPORT	RELIAB. GROUP	GROUP LEADER	STRESS GROUP	LIAISON ENGRG	PROJ ENGRG	~~GOVT~~
APPROVED BY	JW	—	—	—	—	—	RMC CUR	
DATE	12/21/6				—	—	12-21-66	12/21/66
1								

PRIORITY	DRAWING TITLE	DRAWING NO.	EO NO.
C	LINES INSTL PROPELLANT FEED SYSTEM- ASCENT STAGE	LDW280-52350	B2

ISSUED BY W KUTNER X7427
SECTION PROPULSION
GROUP NO. 345
PL 35

01 NAS 9-1100

ENG 322 REV 3-65

GRUMMAN AIRCRAFT ENGINEERING CORP.
CODE IDENT NO. 26512
ENGINEERING ORDER

DWG. NO. LDW280-52350
EO NO. C1
CONTROL INFO NO. LDW280A-4552

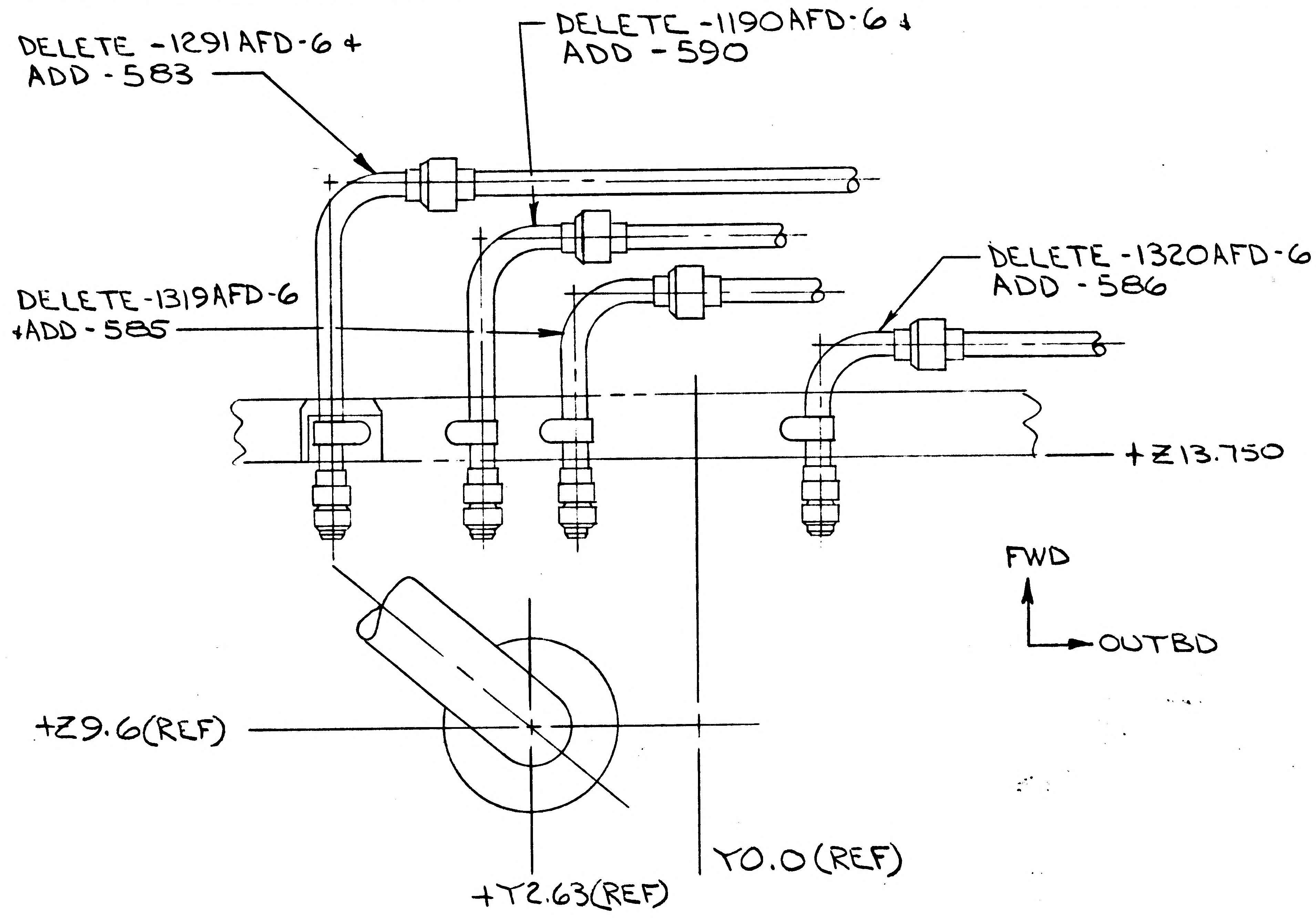
DELETE -1291AFD-6 + ADD -583
DELETE -1190AFD-6 + ADD -590
DELETE-1319AFD-6 +ADD-585
DELETE -1320AFD-6 + ADD -586
+Z13.750
FWD
OUTBD
+Z9.6(REF)
+Y2.63(REF)
Y0.0(REF)

VIEW LOOKING UP
(ZONE 20-C, SHEET 5.00)

LDW280-52350-1 INSTL

NOTES:
1. REVISE ALL VIEWS + B/M IN ACCORDANCE WITH EO
2. ALL TUBE NUMBERS ARE DASH NUMBERS OF LDW280-16000 IN FIELD + DESCRIPTION OF EO

5

DETAIL SPEC REQ ☐ CL II ENGRG CHG ☐ CL I ENGRG CHG ☐

REASON FOR EO: TO ACCEPT FLEX HOSE + TO PROVIDE ENGINE INSTL

DESCRIPTION OF EO: ON-1 INSTL
ZONE 20-C SH 5.00 DELETED -1291AFD-6, -1190AFD-6 -1319AFD-6, -1320AFD-6 + ADDED -583, -590, -585 + -586

GAEC EO RELEASE C
D E 1-11-7

MODEL	EFFECTIVITY		
	PROCURING ACTIVITY NO.	GAEC UNIT NO.	SUB CONTR UNIT NO.
LM		LM-2(32)	

DRAWING CHANGE REQD: REVISE DWG ✓ RECORD EO
DISPOSITION OF PARTS: REWORK ✓ SCRAP

APPROVED BY	JW	—	—	—	CW			
DATE	1/11/67				1/11/67		1-11-67	1-11-6
1	VD1	SUPPORT	RELIAB. GROUP	GROUP LEADER	STRESS GROUP	LIAISON ENGRG	PROJ ENGRG	~~GOVT~~

PRIORITY: C
DRAWING TITLE: LINES INSTL PROPELLANT FEED SYSTEM ASCENT STAGE
DRAWING NO. LDW280-52350
EO NO. C1

ISSUED BY ED BIANCHI X7033 SECTION EQUIPLINES GROUP NO. 332 PL 35

01 NAS 9-1100

ENG 32.1 REV 3-65

GRUMMAN AIRCRAFT ENGINEERING CORP.
CODE IDENT NO. 26512
ENGINEERING ORDER

DWG. NO. LDW280-52350
EO NO. C2
CONTROL INFO NO. LM-5-11594

CANCEL EO A8

RELEASED BY LIAISON

ENG. INFO:
PART NO. LDW280M11174-1 (2) HAS BEEN REMOVED FROM VEHICLE

DETAIL SPEC REQ		CL II ENGRG CHG		CL I ENGRG CHG	

REASON FOR EO	DESCRIPTION OF EO	GAEC C EO RELEASE
TO REMOVE SPACERS WHICH DID NOT PRODUCE ADEQUATE ENG. BELLOWS ALIGN. AS PREDICTED	CANCELLED E.O. A8	(L) LE 32 825

MODEL	EFFECTIVITY: PROCURING ACTIVITY NO.	GAEC UNIT NO.	SUB CONTR UNIT NO.
LM		LM-2 (32)	

DRAWING CHANGE REQD		DISPOSITION OF PARTS	
✓ REVISE DWG	RECORD EO	✓ REWORK	SCRAP

APPROVED BY				—	CW	CH	RHC	
DATE	1/12/67			—	1/12/67	1-12-67	1-16-67	1/12/67
5	VD1	SUPPORT	RELIAB. GROUP	GROUP LEADER	STRESS GROUP	LIAISON ENGRG	PROJ ENGRG	

PRIORITY	DRAWING TITLE	DRAWING NO.	EO NO.
C	LINES INSTL PROPELLANT FEED SYSTEM ASCENT STAGE	LDW280-52350	C2

ISSUED BY VALENTINE 1/12/67 x 1441 SECTION VD1 (PHILLIPS) GROUP NO. 335 PL 5

01 NAS 9-1100

B

ENG 32.1 REV 3-66

GRUMMAN AIRCRAFT ENGINEERING CORP.
CODE IDENT NO. 26512
ENGINEERING ORDER

*

DWG. NO. LDW280-52350
EO NO. C3
CONTROL INFO NO. LM5-11980

ON -1 INSTL LDW280P16212-1 (2) SHOULD BE (1); ADD LDW280P16212-5 (1)

IN F/D ON -1 INSTL (AREA -Y15.00, +Z14.00) (SHEET 5.00 ZONE 21-C) LDW280P16212-1 SHOULD BE LDW280P16212-5

RELEASED BY LIAISON

5

DETAIL SPEC REQ		CL II ENGRG CHG	✓	CL I ENGRG CHG	

REASON FOR EO: INSUFFICIENT CLEARANCE TO STRUCTURE

DESCRIPTION OF EO: ON -1 INSTL LDW280P16212-1 (1) WAS (2), ADDED LDW280P16212-5 (1); IN F/D (SH 5.00 ZONE 21-C) LDW280P16212-5 WAS LDW280P16212-1

GAEC C EO RELEASE: JK

MODEL	EFFECTIVITY		
	PROCURING ACTIVITY NO.	GAEC UNIT NO.	SUB CONTR UNIT NO.
LM		LM-2(32)	

DRAWING CHANGE REQD		DISPOSITION OF PARTS	
✓		✓	
REVISE DWG	RECORD EO	REWORK	SCRAP

APPROVED BY	JW	—	—	—	JF	CH	RMc	
DATE	3/14/67				3-11-67	3/1/67	3-14-67	3/11/67
1	VDI	SUPPORT	RELIAB. GROUP	GROUP LEADER	STRESS GROUP	LIAISON ENGRG	PROJ ENGRG	GOVT

PRIORITY	DRAWING TITLE	DRAWING NO.	EO NO.
C	INSTL LINES PROPELLANT FEED SYSTEM ASCENT STAGE	LDW280-52350	C3

ISSUED BY J. DeVITA X7033

SECTION EQUIP LINES (VDI)

GROUP NO. 332

PL 35

01

NAS 9-1100

ENG 32.2 REV 3-65

B

GRUMMAN AIRCRAFT ENGINEERING CORP.
CODE IDENT NO. 26512
ENGINEERING ORDER

DWG. NO. LEO 280
EO NO. 513
CONTROL INFO NO. LDW280A-5822

NOTE * : VERIFY PROPULSION SYSTEM INTEGRITY BY PERFORMING HELIUM LEAK TEST AT 40 ±5 PSIG AS FOLLOWS:

A. CONNECT HELIUM SUPPLY TO GP9401 AND APPLY 40 ±5 PSIG.
B. SHUT-OFF HELIUM SUPPLY AND MONITOR FOR 15 MINUTES. NO DETECTABLE DECAY PERMITTED. IF LEAKAGE IS EVIDENT, RELIEVE PRESSURE, CORRECT AND RETEST.
C. AFTER SATISFACTORY COMPLETION OF DECAY TEST, REDUCE PRESSURE TO 10 ±5 PSIG AND ATTACH A WARNING TAG TO INDICATE THE SYSTEM IS CHARGED WITH 5-15 PSIG BLANKET PRESSURE.
D. CONNECT HELIUM SUPPLY TO GP9402, APPLY 40 ±5 PSIG AND REPEAT STEPS 'B' AND 'C'.
E. VERIFY THAT PROPULSION FUEL AND OXIDIZER INTERFACES JP9482 AND JP9480 ARE PLUGGED AND RCS INTERCONNECT VALVES (FUEL & OXIDIZER) ARE CLOSED. (TOTAL OF 8 RCS VALVES).
F. CONNECT HELIUM SUPPLY TO GP9442 AND GP9443 AND APPLY 40 ±5 PSIG.
G. REPEAT STEP 'B' ABOVE.
H. OPEN PRIMARY AND SECONDARY SOLENOID LATCHING VALVES AND CONNECT HELIUM SUPPLY TO GP9406 AND APPLY 40 ±5 PSIG.
I. REPEAT STEPS 'B' AND 'C' ABOVE AT GP9406, GP9442 AND GP9443.

DWG NO.	TITLE	EFFECTIVITY	CHANGE NO.
✓ LDW280-51350	NOTED	LM-1 (31)	A8
✓ -52350	↕	LM-2 (32)	C4
-53350	↕	LM-3 (33)	A4
LDW280-54350	NOTED	LM-4 (34) THRU LM-15 (45)	A2

* USE NEXT AVAILABLE NOTE NUMBER

DETAIL SPEC REQ ☑ CL II ENGRG CHG ☐ CL I ENGRG CHG ☐

REASON FOR EO: THIS NOTE WAS ON WRONG DWG (LDW280-16000)

DESCRIPTION OF EO: TO -1 INSTL ADDED NOTE *

Ⓡ GAEC EO RELEASE: C 5 JK 3/13/7

MODEL	PROCURING ACTIVITY NO.	GAEC UNIT NO.	SUB CONTR UNIT NO.
LM		LM-1 (31)	
		THRU	
		LM-15 (45)	

DRAWING CHANGE REQD: REVISE DWG ✓ RECORD EO ☐

DISPOSITION OF PARTS: REWORK ✓ SCRAP ☐

		SUPPORT	RELIAB. GROUP	GROUP LEADER	STRESS GROUP	LIAISON ENGRG	PROJ ENGRG	
APPROVED BY		—	—				Dam	Bell
DATE	3/6/67			3/6/67	3 0		3/6/67	3-8-67
5	VDI							

PRIORITY: C

DRAWING TITLE: LINES INSTALLATION ASCENT STAGE ~ PROPULSION

DRAWING NO. LEO 280

EO NO. 513

ISSUED BY J. WOLF x 7033 SECTION VDI (EQ. LINES) GROUP NO. 332 PL 35

01

NAS 9-1100

B

ENG 32.2 REV 3-65

GRUMMAN AIRCRAFT ENGINEERING CORP.
CODE IDENT NO. 26512
ENGINEERING ORDER

DWG. NO. LDW280-52350
EO NO. C5
CONTROL INFO NO. LDW280A-6008

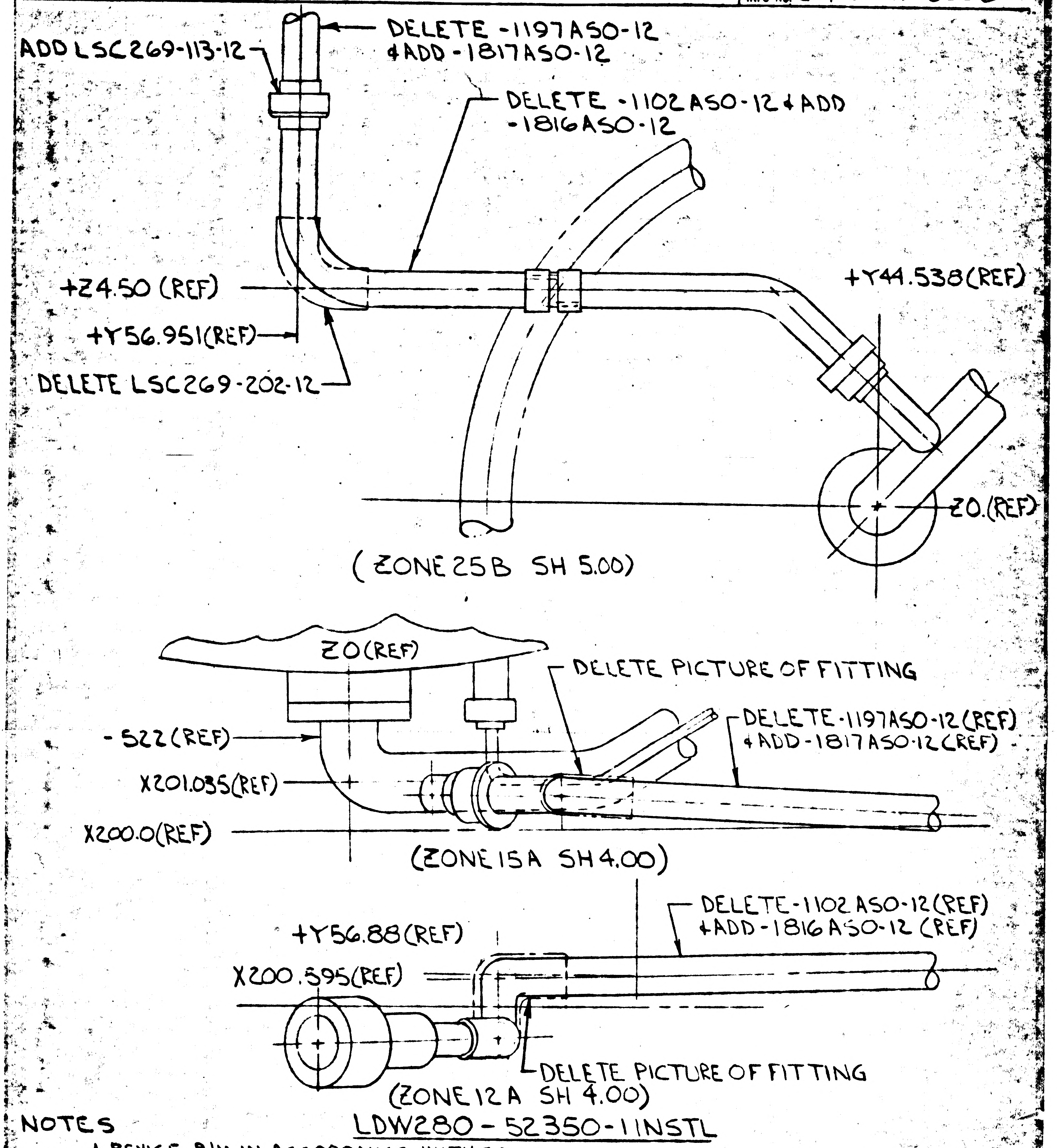

ADD LSC269-113-12
DELETE -1197ASO-12 & ADD -1817ASO-12
DELETE -1102ASO-12 & ADD -1816ASO-12
+Z4.50 (REF)
+Y56.951(REF)
DELETE LSC269-202-12
+Y44.538(REF)
Z0.(REF)
(ZONE 25B SH 5.00)
Z0(REF)
DELETE PICTURE OF FITTING
-522(REF)
DELETE-1197ASO-12(REF) & ADD-1817ASO-12(REF)
X201.035(REF)
X200.0(REF)
(ZONE 15A SH 4.00)
+Y56.88(REF)
DELETE-1102ASO-12(REF) & ADD-1816ASO-12 (REF)
X200.595(REF)
DELETE PICTURE OF FITTING
(ZONE 12A SH 4.00)

LDW280-52350-1 INSTL

NOTES
1. REVISE BIM IN ACCORDANCE WITH EO
2. ALL TUBE NUMBERS ARE DASH NUMBERS OF LDW280-16000 IN FIELD & DESCRIPTION OF EO

DESCRIPTION OF EO CONT
ADDED -1817ASO-12. DELETED PICTURE OF FITTING ZONE 12A SH 4.00 DELETED -1102ASO-12 & ADDED -1816ASO-12 DELETED PICTURE OF FITTING

DETAIL SPEC REQ		CL II ENGRG CHG	✓	CL I ENGRG CHG	LCD19-1209 5

REASON FOR EO: TO PERMIT REMOVAL OF LOWER ASCENT STAGE HEAT SHIELD

DESCRIPTION OF EO: ON -1 INSTL ZONE 25B SH 5.00 DELETED -1197ASO-12 & -1102ASO-12 & ADDED -1817ASO-12 & -1816ASO-12. DELETED LSC269-202-12 ADDED LSC269-113-2. ZONE 15A SH 4.00 DELETED -1197ASO-12(REF)

GAEC C EO RELEASE: JK 4/5/7

MODEL	PROCURING ACTIVITY NO.	GAEC UNIT NO.	SUB CONTR UNIT NO.
LM		LM-2 (32)	

DRAWING CHANGE REQD: REVISE DWG ✓ RECORD EO
DISPOSITION OF PARTS: REWORK ✓ SCRAP

APPROVED BY		—	—	JW	CW		Dam	
DATE	3/23			3/23/67	3/29/67		3/31/67	4-5-67
1	VD1	SUPPORT	RELIAB GROUP	GROUP LEADER	STRESS GROUP	LIAISON ENGRG	PROJ ENGRG	GOVT

PRIORITY: C
DRAWING TITLE: LINES INSTL PROPELLANT FEED SYS ASCENT STAGE
DRAWING NO. LDW280-52350
EO NO. C5

ISSUED BY ED BIANCHI X1392 SECTION EQUIP LINES GROUP NO. 332 PL25

01
NAS 9-1100

B	GRUMMAN AIRCRAFT ENGINEERING CORP. CODE IDENT NO. 26512 ENGINEERING ORDER	DWG. NO. LDW280-52350	EO NO. C6
GMO 32.2 REV 3-66	*	CONTROL INFO NO. LM-5-13190	

RELEASED BY LIAISON

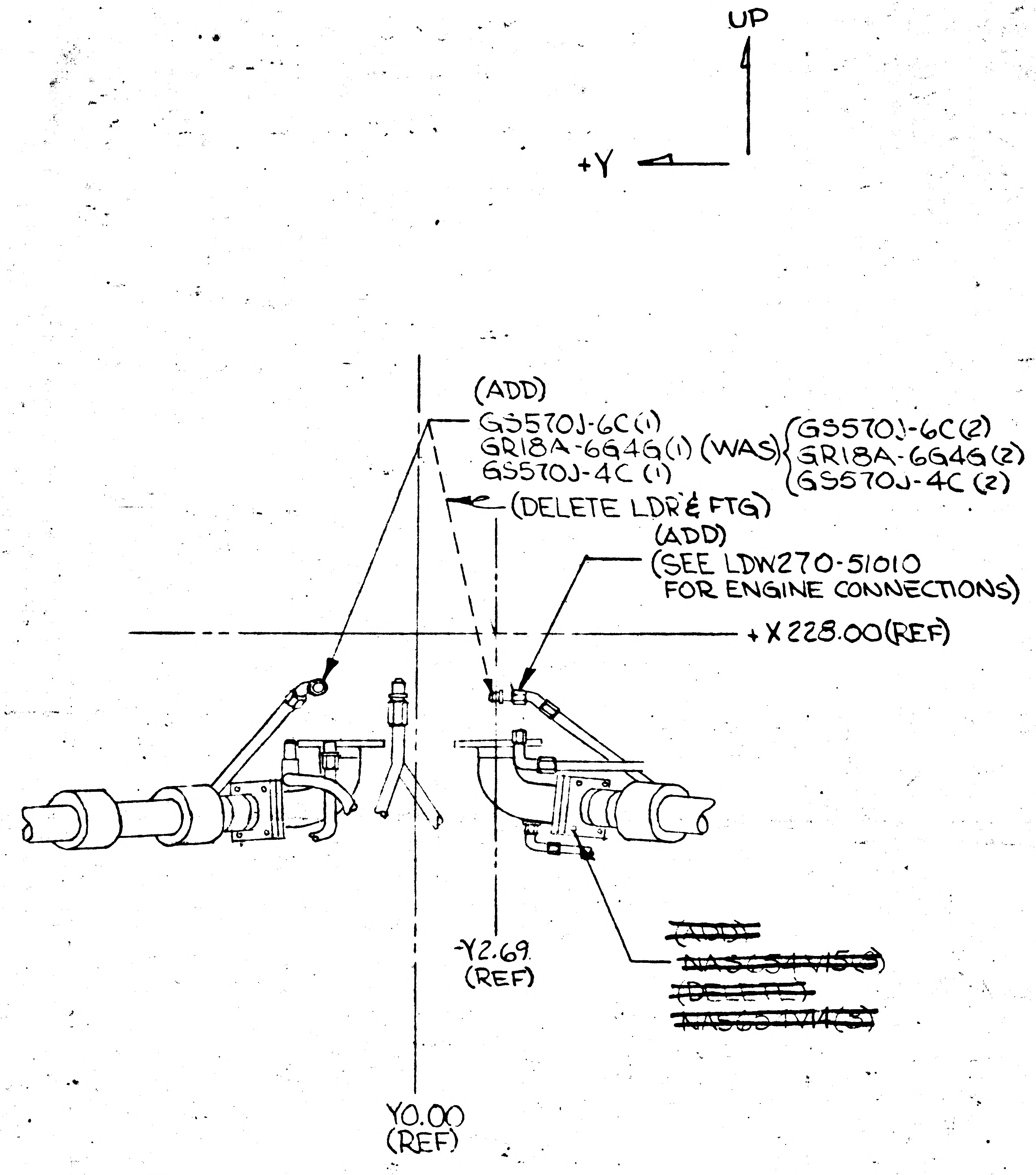
UP
+Y
(ADD)
GS570J-6C(1)
GR18A-6G4G(1) (WAS) GS570J-6C(2)
GS570J-4C (1)
GR18A-6G4G(2)
GS570J-4C (2)
(DELETE LDR & FTG)
(ADD)
(SEE LDW270-51010
FOR ENGINE CONNECTIONS)
+X 228.00(REF)
-Y2.69
(REF)
~~(ADD)~~
~~NAS634V15(3)~~
~~(DELETE)~~
~~NAS634V14(3)~~
Y0.00
(REF)

LDW280-52350-1INSTL
(VIEW LKG AFT FROM +Z27)
(SH4.00, ZONE 9A)

DETAIL SPEC REQ		CL II ENGRG CHG	✓	CL I ENGRG CHG	5

CHG BELLOWS REASON FOR EO FLANGE BOLT LENGTH & REVISE FITTINGS REQD TO AGREE WITH LDW270-51010-1INSTL.

DESCRIPTION OF EO ON-1: DELETED - GS570J-6C(1), GR18A-6G4G(1), GS570J-4C(1), ~~NAS634V14(3)~~, ~~ADDED NAS634V15(3)~~ ADDED "SEE LDW 270-51010 FOR ENGINE CONNECTIONS"

GAEC EO RELEASE: JK

MODEL	PROCURING ACTIVITY NO.	GAEC UNIT NO.	SUB CONTR UNIT NO.
LM		LM-2 (32)	

DRAWING CHANGE REQD		DISPOSITION OF PARTS		APPROVED BY	WT	—	—	—	JFK	CH	DAM	
✓		✓		DATE	4/15/67			—	4-20-67	4-18	4-25-67	4-20-67
REVISE DWG	RECORD EO	REWORK	SCRAP	1	VD1	SUPPORT	RELIAB. GROUP	GROUP LEADER	STRESS GROUP	LIAISON ENGRG	PROJ ENGRG	GOVT

PRIORITY	DRAWING TITLE	DRAWING NO.	EO NO.
C	LINES INSTL. - PROPELLANT FEED SYSTEM - ASCENT STAGE	LDW280-52350	C6

ISSUED BY BIDONDE X 1508 SECTION VD1(EQUIP LINES) GROUP NO. 332 PL 5

01

NAS 9-1100

GRUMMAN AIRCRAFT ENGINEERING CORP.
CODE IDENT NO. 26512
ENGINEERING ORDER

DWG. NO. LDW280-52350
EO NO. C7
CONTROL INFO NO. LDW280A-5989

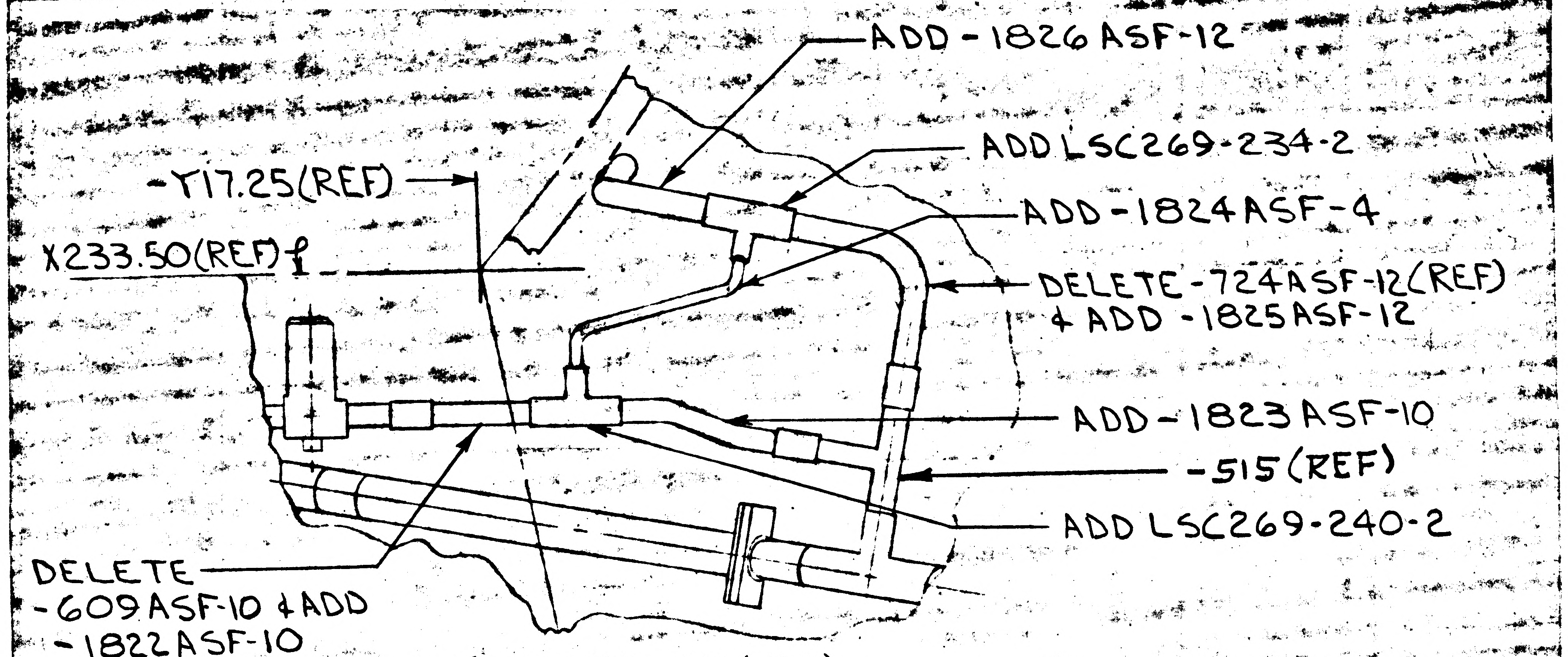

ADD -1826 ASF-12
ADD LSC269-234-2
-Y17.25(REF)
ADD -1824 ASF-4
X233.50(REF) ℄
DELETE -724 ASF-12(REF) + ADD -1825 ASF-12
ADD -1823 ASF-10
-515(REF)
ADD LSC269-240-2
DELETE -609 ASF-10 + ADD -1822 ASF-10

(ZONE 8B SH4.00)

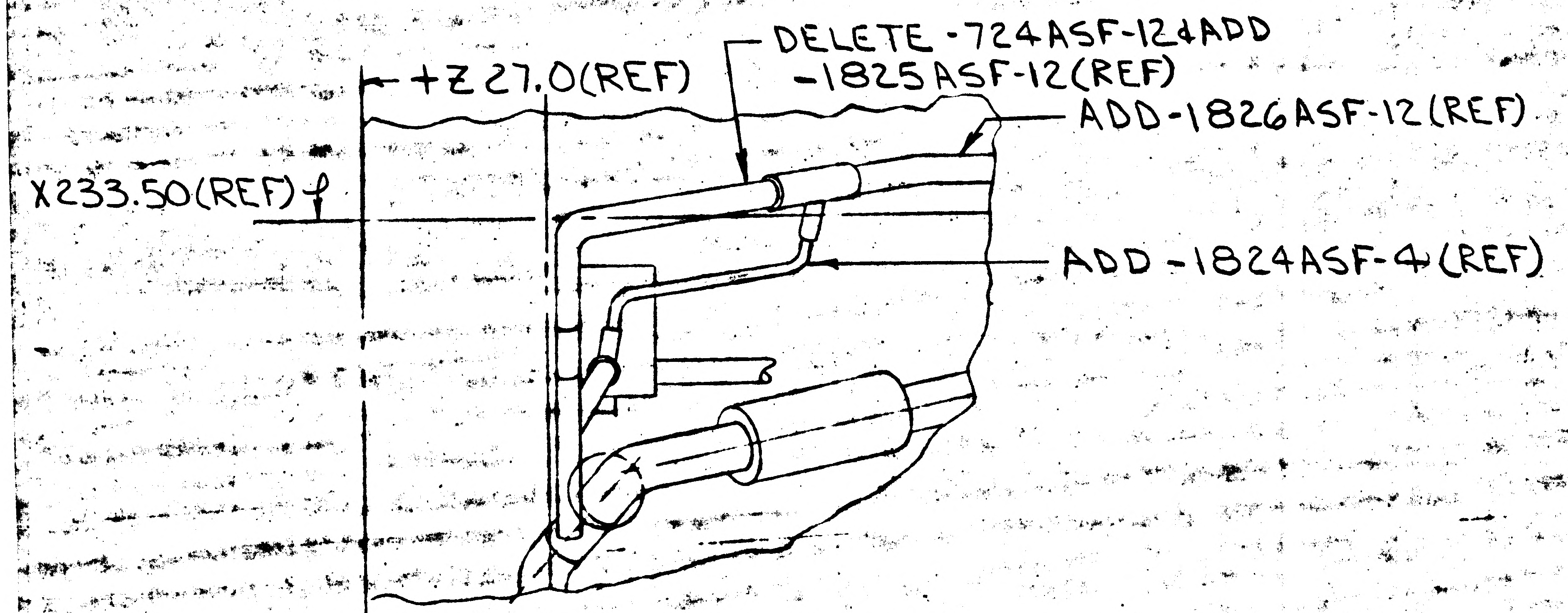

+Z27.0(REF)
DELETE -724 ASF-12 + ADD -1825 ASF-12(REF)
ADD -1826 ASF-12(REF)
X233.50(REF) ℄
ADD -1824 ASF-4(REF)

(ZONE 4B SH4.00)

LDW280-52350-1 INSTL

NOTES
1. ALL TUBE NUMBERS ARE DASH NUMBERS OF LDW280-16000 IN FIELD + DESCRIPTION OF EO
2. REVISE FID + BIM IN ACCORDANCE WITH EO

DESCRIPTION OF EO CONT
ZONE 4B SH4.00 DELETED -724 ASF-12 + ADDED -1825 ASF-12(REF) + -1826 ASF-12(REF), -1824 ASF-4(REF)

DETAIL SPEC RQR ☐ CL II ENGRG CHG ☑ CL I ENGRG CHG ☐ LCD-19-1134 5

REASON FOR EO
ADD HIGH POINT BLEED TO H'AL SOL VALVE FEED LINE AIS

DESCRIPTION OF EO
ON -1 INSTL
ZONE 8B SH4.00 DELETED -724 ASF-12(REF), -609 ASF-10 ADDED -1822 ASF-10, -1823 ASF-10, -1825 ASF-12, -1824 ASF-4 -1826 ASF-12, LSC269-234-2 + LSC269-240-2

GAEC EO RELEASE JK 4/21/7

MODEL	PROCURING ACTIVITY NO.	GAEC UNIT NO.	SUB CONTR UNIT NO.
LM		LM-2 (32)	

DRAWING CHANGE REQD: REVISE DWG ✓ RECORD EO
DISPOSITION OF PARTS: REWORK ✓ SCRAP

		PROJ ENGRG	RELIAB GROUP	GROUP LEADER	STRESS GROUP	LIAISON ENGRG	PROJ ENGRG	
APPROVED BY	JaP	QB		[illegible]	CW		Dam	B.T.
DATE	4/4/67	[illegible]		3/31/67	4-17-67		4/20/67	4-20-67
	VD1							

PRIORITY C
DRAWING TITLE LINES INSTL PROPELLANT FEED SYS ASCENT STAGE
DRAWING NO. LDW280-52350
EO NO. C7

ISSUED BY ED BIANCHI X1392 SECTION EQUIP-LINES GROUP NO. 332 PL 25

01 NAS 9-1100

01

NAS 9-1100

B

ENG 32.2 REV 3-66

GRUMMAN AIRCRAFT ENGINEERING CORP.

CODE IDENT NO. 26512

ENGINEERING ORDER

DWG. NO. LDW280-52350

EO NO. C8

CONTROL INFO NO. LDW280A - 6636

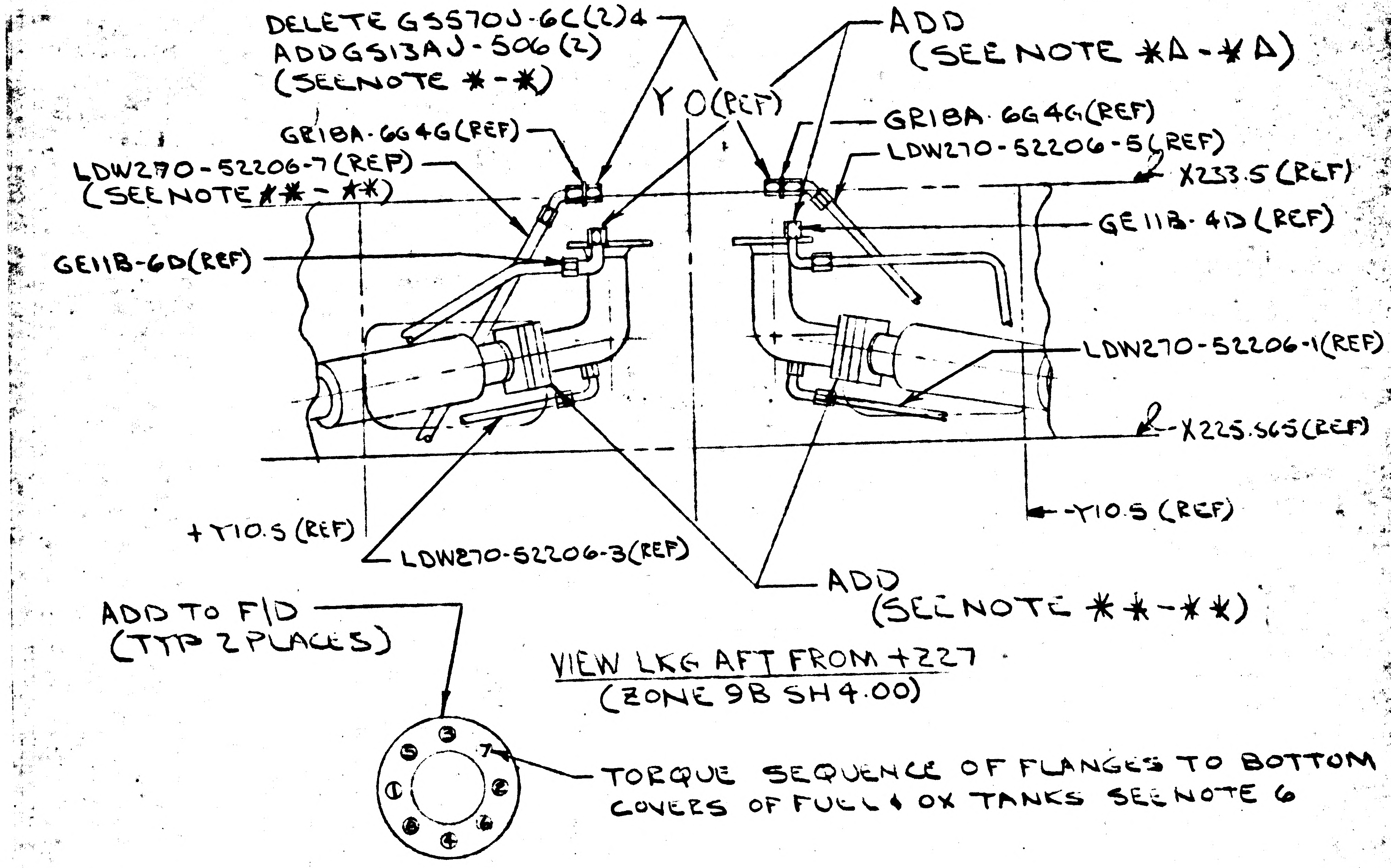
DELETE GS570J-6C(2)4
ADDGS13AJ-506(2)
(SEENOTE ✱-✱)
Y O(REF)
ADD
(SEE NOTE ✱Δ-✱Δ)
GR1BA-6G4G(REF)
LDW270-52206-7(REF)
(SEE NOTE ✱✱-✱✱)
GE11B-6D(REF)
GR1BA-6G4G(REF)
LDW270-52206-5(REF)
X233.5 (REF)
GE11B-4D(REF)
LDW270-52206-1(REF)
X225.565(REF)
-Y10.5 (REF)
+Y10.5 (REF)
LDW270-52206-3(REF)
ADD
(SEE NOTE ✱✱-✱✱)
ADD TO F/D
(TYP 2 PLACES)
3
7
1
5

VIEW LKG AFT FROM +227
(ZONE 9B SH 4.00)

TORQUE SEQUENCE OF FLANGES TO BOTTOM COVERS OF FUEL & OX TANKS SEE NOTE 6

ADD NOTES

✱✱-✱✱ HOSE END FITTINGS ON LDW270-52206-1-3-5 & -7 HOSES TO BE TORQUED TO 70-120 IN LBS

✱-✱ GR1BA-6G4G FITTINGS TO BE TORQUED TO 75-125 IN LBS(FUEL) & 270-300 IN LBS (OX)

✱Δ-✱Δ GE11B-6D FITTING TO BE TORQUED TO 75-125 IN. LBS.
GE11B-4D FITTING TO BE TORQUED TO 40-65 IN. LBS

REVISE NOTE 6 TO READ AS FOLLOWS:
INSTALL BOLTS FINGER TIGHT & TORQUE IN SEQUENCE AS FOLLOWS:
a) PHYSICAL LOCATION FOR START OF SEQUENCE (BOLT #1) IS OPTIONAL
b) TORQUE ALL BOLTS PER SEQUENCE TO 10 IN. LBS & REPEAT SEQUENCE UNTIL BOLTS DO NOT TURN WHEN 10 IN. LBS IS APPLIED
c) REPEAT STEP (b) APPLYING 20 IN. LBS
d) REPEAT STEP (b) APPLYING 32-35 IN. LBS FOR FINAL TORQUE

✱✱-✱✱ INSTALL BOLTS FINGER TIGHT & TORQUE IN SEQUENCE AS FOLLOWS
a) PHYSICAL LOCATION FOR START IS OPTIONAL
b) TORQUE ALL BOLTS PER SEQUENCE TO 30 IN LBS & REPEAT SEQUENCE UNTIL BOLTS DO NOT TURN WHEN 30 IN LBS IS APPLIED
c) REPEAT STEP b) APPLYING 50 IN LBS
d) REPEAT STEP b) APPLYING 70-80 IN LBS FOR FINAL TORQUE

✱✱-✱✱
✱-✱
✱Δ-✱Δ
✱✱-✱✱
USE NEXT AVAILABLE NOTE NUMBER

LDW280-52350-1 INSTL

5

DETAIL SPEC REQ	☐	CL II ENGRG CHG	✓	CL I ENGRG CHG	☐	LCD-1078

REASON FOR EO: TO REVISE TORQUE REQUIREMENTS

DESCRIPTION OF EO: NOTED

GAEC C EO RELEASE: JK 5/2/7

MODEL	PROCURING ACTIVITY NO.	GAEC UNIT NO.	SUB CONTR UNIT NO.
LM		LM-2(32)	

DRAWING CHANGE REQD: REVISE DWG	RECORD EO	DISPOSITION OF PARTS: REWORK	SCRAP
✓		✓	

APPROVED BY	Jaf			Jw	JY		Dam	al
DATE	4/28/67			4/28/67	4/28/67		5/1/67	5-1-67
1	VDI	SUPPORT	RELIAB. GROUP	GROUP LEADER	STRESS GROUP	LIAISON ENGRG	PROJ ENGRG	

PRIORITY: C

DRAWING TITLE: LINES INSTL PROPELLANT FEED STS ASCENT STAGE

DRAWING NO.: LDW280-52350

EO NO.: C8

ISSUED BY ED BIANCHI X1392 SECTION EQUIPLINES GROUP NO. 332 PL 25

B

ENG 32.1 REV 3-65

GRUMMAN AIRCRAFT ENGINEERING CORP.
CODE IDENT NO. 26512
ENGINEERING ORDER

DWG. NO. LDW280-52350		EO NO. C10
CONTROL INFO NO. LDW280A-6825		

ADD NOTE ✱--✱

PROPELLANT FEED LINE BELLOWS ARE TO BE INSPECTED PER LE1280-008

DETAIL SPEC REQ	☐	CL II ENGRG CHG	✓	CL I ENGRG CHG	☐	LCD-1078 5

REASON FOR EO	DESCRIPTION OF EO	Ⓡ GAEC C EO RELEASE
TO ADD NOTE FOR INSPECTING BELLOWS	NOTED	JK 5/17/7

MODEL	EFFECTIVITY			DRAWING CHANGE REQD		DISPOSITION OF PARTS		APPROVED BY	Jap			Jw			dam	
	PROCURING ACTIVITY NO.	GAEC UNIT NO.	SUB CONTR UNIT NO.	✓		✓		DATE	5/10/67			5/9/67	5.12		5/15/67	5/16/67
				REVISE DWG	RECORD EO	REWORK	SCRAP	1	YD1	SUPPORT	RELIAB GROUP	GROUP LEADER	STRESS GROUP	LIAISON ENGRG	PROJ ENGRG	
LM		LM-2 (32)														

PRIORITY	DRAWING TITLE	DRAWING NO.	EO NO.
C	LINES INSTL PROPELLANT FEED SYS ASCENT STAGE	LDW280-52350	C10

ISSUED BY ED BIANCHI X1392 SECTION EQUIPLINES GROUP NO. 332 PL 25

01 NAS 9-1100

ENG 32.1 REV 3-65

GRUMMAN AIRCRAFT ENGINEERING CORP.
CODE IDENT NO. 26512
ENGINEERING ORDER

B

DWG. NO. LDW280-52350
EO NO. D2
CONTROL INFO NO. LDW280A-7051

THIS EO CANCELS EO D1

DETAIL SPEC REQ	☐	CL II ENGRG CHG	☑	CL I ENGRG CHG	☐	LCD 1572	5

REASON FOR EO: ENGINE ELBOW CHANGES REQUIRE NEW ELBOW TO ENGINE CLAMP

DESCRIPTION OF EO: CANCELLED EO D1

Ⓡ GAEC EO RELEASE: JK 7/18/67 C

MODEL	EFFECTIVITY: PROCURING ACTIVITY NO.	EFFECTIVITY: GAEC UNIT NO.	EFFECTIVITY: SUB CONTR UNIT NO.
LM		LM-2 (32)	

DRAWING CHANGE REQD: REVISE DWG	DRAWING CHANGE REQD: RECORD EO	DISPOSITION OF PARTS: REWORK	DISPOSITION OF PARTS: SCRAP
✓		✓	

	VDI	SUPPORT	RELIAB. GROUP	GROUP LEADER	STRESS GROUP	LIAISON ENGRG	PROJ ENGRG	GOVT
APPROVED BY	Jal			F.NR	hw		Jms	JRP
DATE	7/8/67			7/8/67	7-11		7/11/67	7-18-67

PRIORITY	DRAWING TITLE	DRAWING NO.	EO NO.
C	LINES INSTALLATION PROP. FEED SYSTEM - ASCENT STAGE	LDW280-52350	D2

ISSUED BY VALENTINE 7/7/67 x7033
SECTION VEH. DES. INT.
GROUP NO. 335
PL 25

01

NAS 9-1100

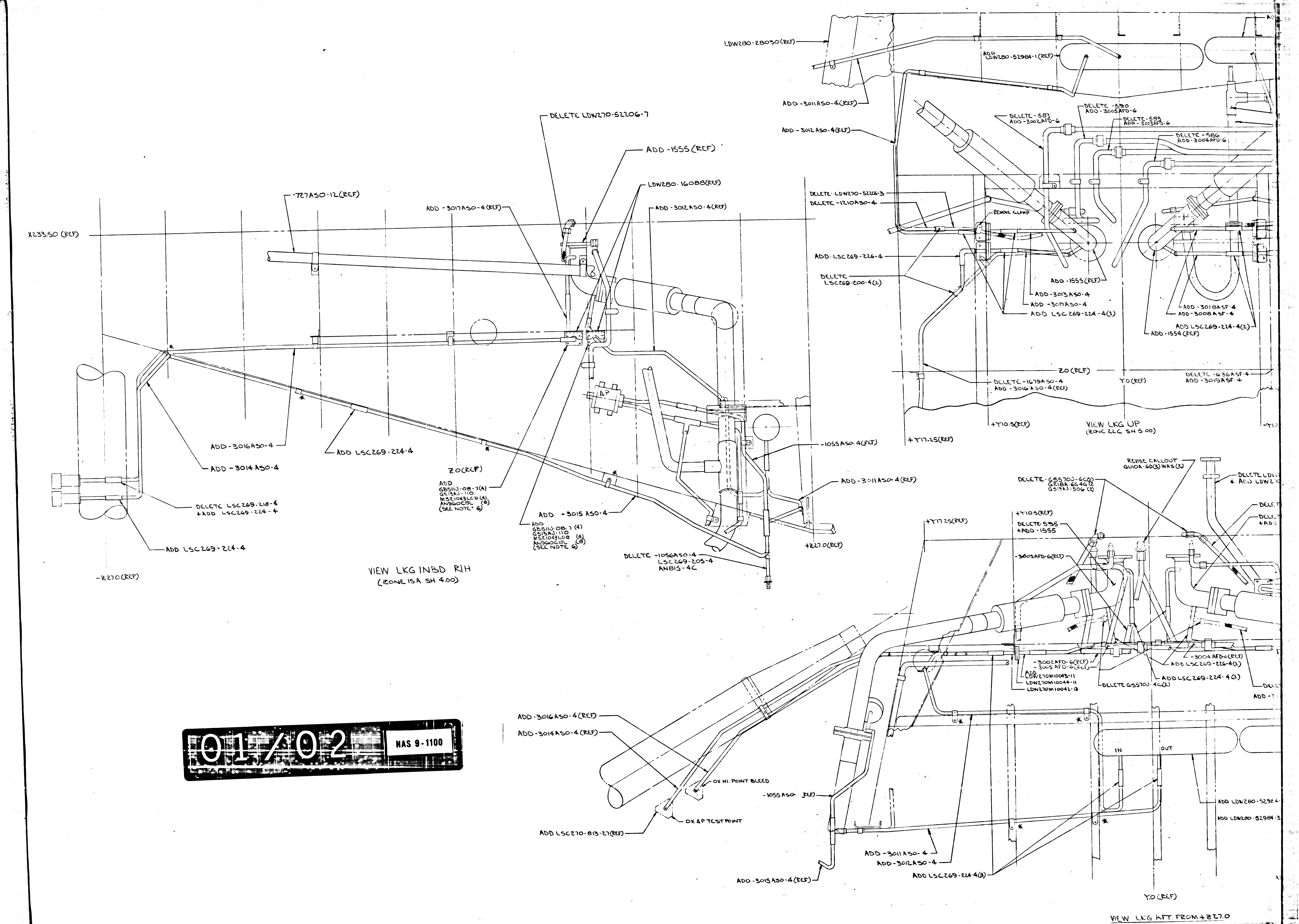
LDW280-28030(REF)
ADD LDW280-52984-1(REF)
ADD-3011ASO-4(REF)
ADD-3012ASO-4(REF)
DELETE-583 ADD-3002AFD-6
DELETE-590 ADD-3005AFD-6
DELETE-585 ADD-3003AFD-6
DELETE-586 ADD-3004AFD-6
DELETE-LDW270-52206-3
DELETE-1210ASO-4
REMOVE CLAMP
ADD-LSC269-226-4
DELETE LSC269-200-4(2)
ADD-1555(REF)
ADD-3013ASO-4
ADD-3017ASO-4
ADD LSC269-224-4(3)
ADD-3018ASF-4
ADD-3008ASF-4
ADD LSC269-224-4(2)
ADD-1554(REF)
Z0(REF)
Y0(REF)
DELETE-1679ASO-4
ADD-3016ASO-4(REF)
DELETE-636ASF-4
ADD-3019ASF-4
+Y10.5(REF)
+Y17.25(REF)
DELETE LDW270-52206-7
ADD-1555(REF)
LDW280-16088(REF)
-727ASO-12(REF)
ADD-3017ASO-4(REF)
ADD-3012ASO-4(REF)
X233.50(REF)
ΔP
-1055ASO-4(REF)
ADD-3011ASO-4(REF)
ADD-3016ASO-4
ADD-3014ASO-4
ADD LSC269-224-4
Z0(REF)
ADD GB511J-08-7(4) GS13AJ-110 MS21043LC8(4) AN960C8L (8) (SEE NOTE 6)
ADD -3015ASO-4
ADD GB511J-08-7(4) GS13AJ-110 MS21043L08 (4) AN960C8L (8) (SEE NOTE 6)
DELETE LSC269-218-4 +ADD LSC269-224-4
ADD LSC269-224-4
-Z270(REF)
+Z27.0(REF)
DELETE-1056ASO-4 LSC269-205-4 AN815-4C
REVISE CALLOUT GU10A-6D(3) WAS(2)
DELETE-GS570J-6C(2) GS18A-6C(2) GS13AJ-506(2)
+Y10.5(REF)
+Y17.25(REF)
DELETE-535 +ADD-1555
-3003AFD-6(REF)
-3004AFD-6(REF)
ADD LSC269-226-4(2)
ADD LSC269-224-4(2)
-3002AFD-6(REF) -3005AFD-6(REF)
ADD LDW270M10043-11 LDW270M10044-11 LDW270M10042-13
DELETE GS570J-4C(2)
ADD-3016ASO-4(REF)
ADD-3014ASO-4(REF)
OX HI. POINT BLEED
OX ΔP TEST POINT
ADD LSC270-813-27(REF)
-1055ASO-4(REF)
IN
OUT
ADD LDW280-52984-
ADD LDW280-52984-3
ADD-3011ASO-4
ADD-3012ASO-4
ADD LSC269-224-4(3)
ADD-3015ASO-4(REF)
Y0(REF)

VIEW LKG INBD R/H
(ZONE 15A SH 4.00)

VIEW LKG UP
(ZONE 22C SH 5.00)

VIEW LKG AFT FROM +Z27.0
(ZONE 9A SH 4.00)

01/02 NAS 9-1100

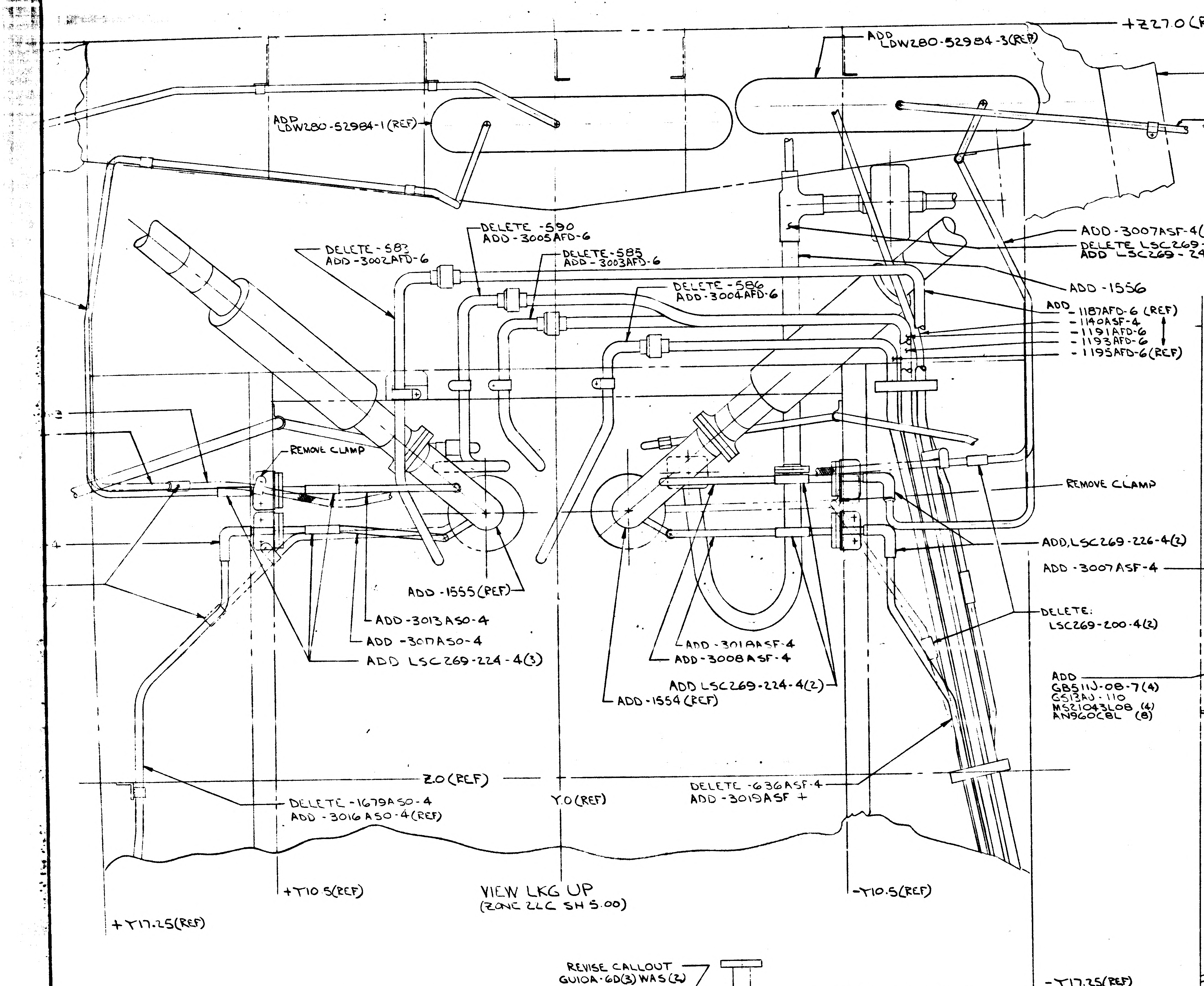
+Z27.0 (REF)
ADD LDW280-52984-3(REF)
LDW280-28030(REF)
ADD -3006ASF-4(REF)
ADD LDW280-52984-1(REF)
ADD -3007ASF-4(REF)
DELETE LSC269-234-25
ADD LSC269-240-22
DELETE -590
ADD -3005AFD-6
DELETE -583
ADD -3002AFD-6
DELETE -585
ADD -3003AFD-6
DELETE -586
ADD -3004AFD-6
ADD -1556
ADD -1187AFD-6 (REF)
-1190ASF-4
-1191AFD-6
-1193AFD-6
-1195AFD-6(REF)
REMOVE CLAMP
REMOVE CLAMP
ADD LSC269-226-4(2)
ADD -3007ASF-4
DELETE LSC269-200-4(2)
ADD GB511J-08-7(4)
GS13AJ-110
MS21043L08 (4)
AN960C8L (8)
ADD -1555(REF)
ADD -3013ASO-4
ADD -3017ASO-4
ADD LSC269-224-4(3)
ADD -3011ASF-4
ADD -3008ASF-4
ADD LSC269-224-4(2)
ADD -1554(REF)
Z0(REF)
DELETE -1679ASO-4
ADD -3016ASO-4(REF)
Y0(REF)
DELETE -636ASF-4
ADD -3015ASF +
+T10.5(REF)
-T10.5(REF)
+T17.25(REF)
-T17.25(REF)

VIEW LKG UP
(ZONE 2LC SH 5.00)

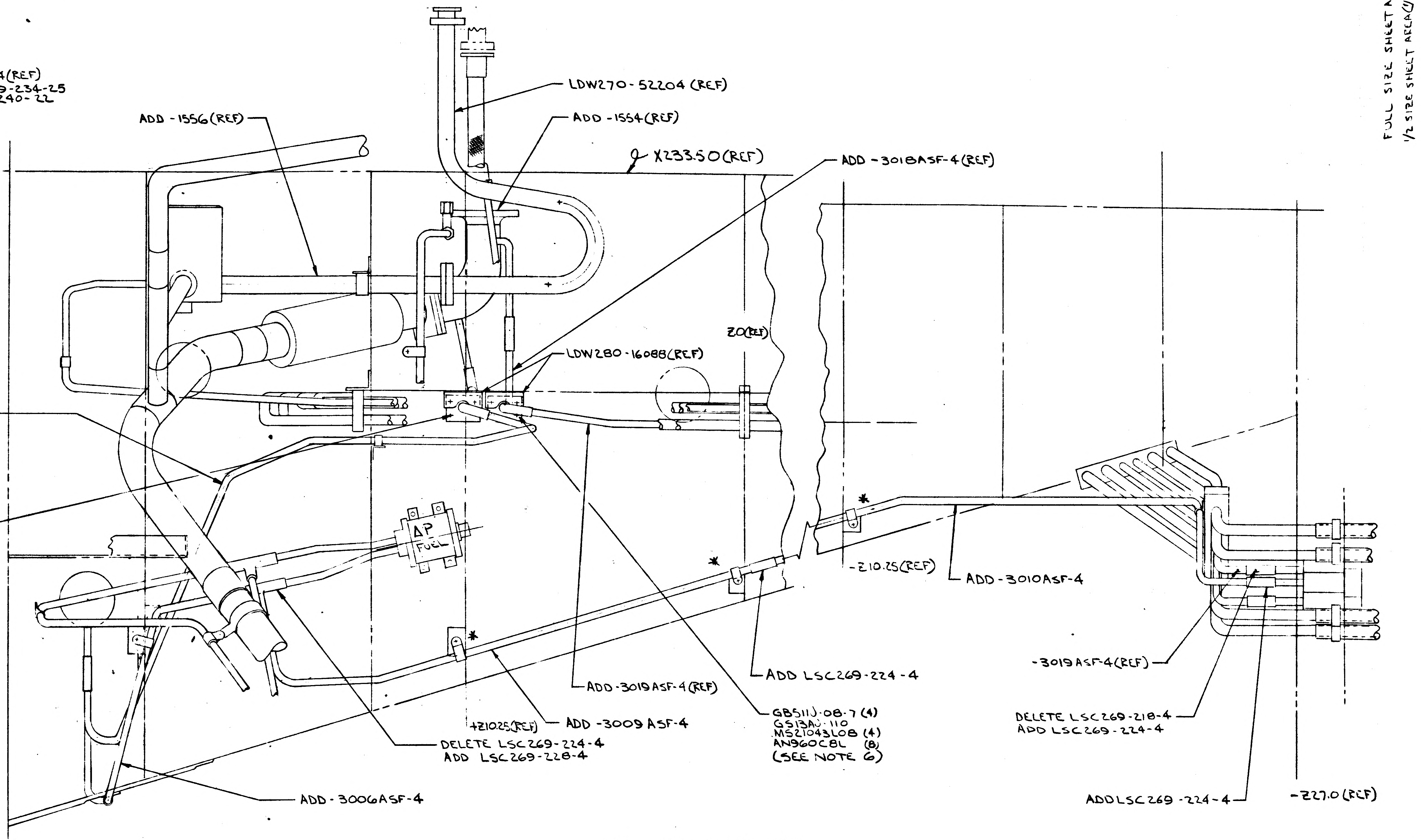
LDW270-52204 (REF)
ADD -1556(REF)
ADD -1554(REF)
X233.50(REF)
ADD -3018ASF-4(REF)
Z0(REF)
LDW280-16088(REF)
ΔP
FUEL
-Z10.25(REF)
ADD -3010ASF-4
-3019ASF-4(REF)
ADD LSC269-224-4
DELETE LSC269-218-4
ADD LSC269-224-4
ADD -3019ASF-4(REF)
GB511J-08-7 (4)
GS13AJ-110
MS21043L08 (4)
AN960C8L (8)
(SEE NOTE 6)
+Z10.25(REF)
ADD -3009ASF-4
DELETE LSC269-224-4
ADD LSC269-228-4
ADD -3006ASF-4
ADD LSC269-224-4
-Z27.0(REF)
+Z27.0(REF)

VIEW LKG INBD L/H
(ZONE 3B SH 4.00)

DELETE -1056ASO-4 & -1058ASF-4 FROM NOTE*11
* GC12H-4 CLAMPS INSTALLED PER LPC-280-22
ADD GB511J-08-7(16) & GB511J-08-8 TO NOTE 6

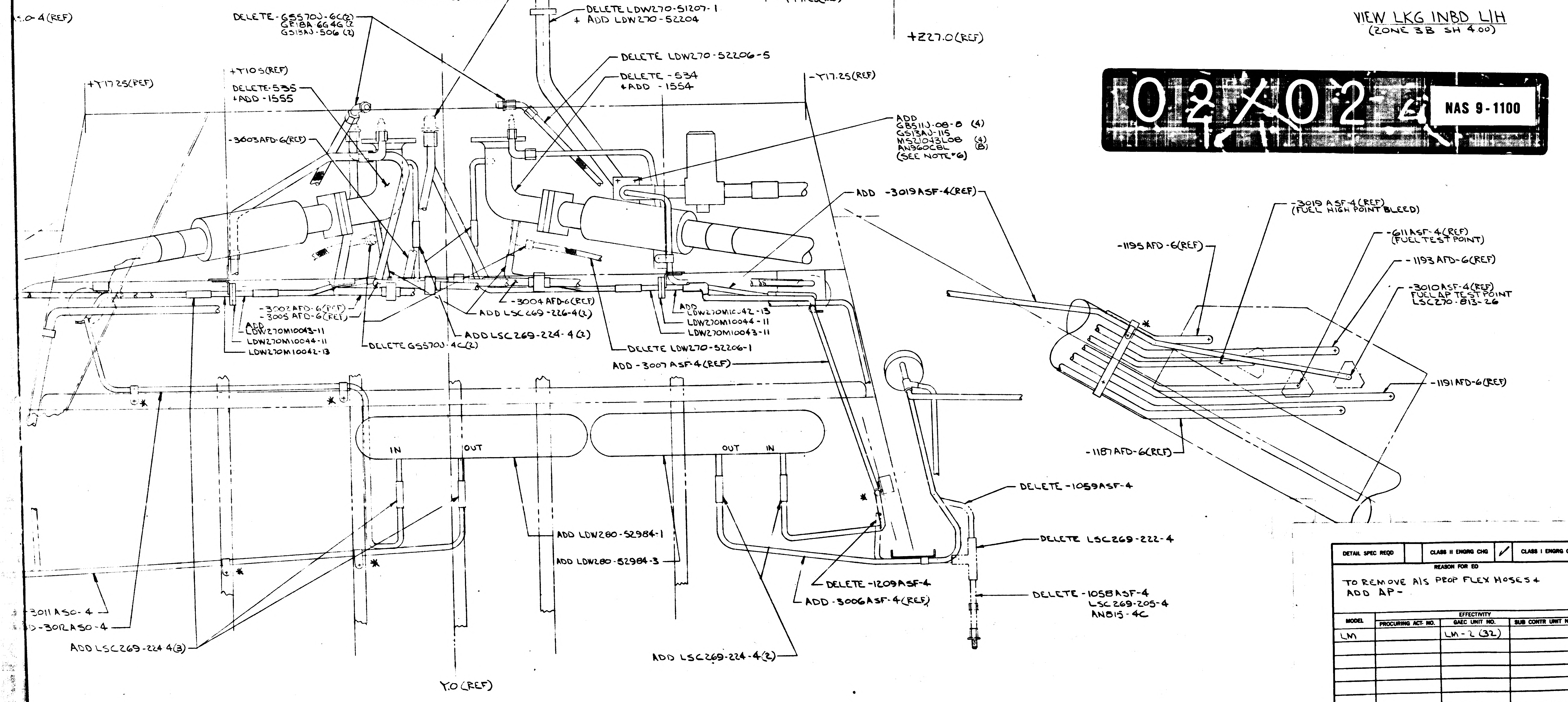
-T10.4(REF)
REVISE CALLOUT
GU10A-6D(3) WAS (2)
DELETE LDW270-51207-1
+ ADD LDW270-52204
DELETE -GS570J-6C(2)
GR18A-6646(2)
GS13AJ-506 (2)
DELETE LDW270-52206-5
+T10.5(REF)
DELETE -534
+ADD -1554
DELETE -535
+ADD -1555
+T17.25(REF)
-T17.25(REF)
-3003AFD-6(REF)
ADD
GB511J-08-8 (4)
GS13AJ-115
MS21043L08 (4)
AN960C8L (8)
(SEE NOTE 6)
ADD -3019ASF-4(REF)
-3002AFD-6(REF)
-3005AFD-6(REF)
ADD LDW270M10043-11
LDW270M10044-11
LDW270M10042-13
-3004AFD-6(REF)
ADD LSC269-226-4(2)
ADD LSC269-224-4(2)
DELETE GS570J-4C(2)
ADD LDW270M10042-13
LDW270M10044-11
LDW270M10043-11
DELETE LDW270-52206-1
ADD -3007ASF-4(REF)
IN
OUT
OUT
IN
ADD LDW280-52984-1
ADD LDW280-52984-3
DELETE -1059ASF-4
DELETE LSC269-222-4
DELETE -1209ASF-4
ADD -3006ASF-4(REF)
DELETE -1058ASF-4
LSC269-205-4
AN815-4C
ADD LSC269-224-4(2)
-3011ASO-4
-3012ASO-4
ADD LSC269-224-4(3)
Y0(REF)
-3019ASF-4(REF)
(FUEL HIGH POINT BLEED)
-1195AFD-6(REF)
-611ASF-4(REF)
(FUEL TEST POINT)
-1193AFD-6(REF)
-3010ASF-4(REF)
FUEL ΔP TEST POINT
LSC270-813-26
-1191AFD-6(REF)
-1187AFD-6(REF)

VIEW LKG AFT FROM +Z27.0
(ZONE 9A SH 4.00)

102X02 NAS 9-1100

NOTES
1. ALL TUBE NUMBERS ARE DASH NUMBERS OF LDW280-16000 IN F/D & DESCRIPTION OF EO
2. REVISE F/D & B/M IN ACCORDANCE WITH EO

LDW280-52350-1 INSTL

DESCRIPTION OF EO CONTINUED
ADDED LDW280-52984-1 & 3, LDW270M10042-13(4), LDW270M10044-11(4) LDW270M-10043-11(4) & LDW270-52204. DELETED LDW270-52206-5, -51207-1, -52206-1, -52206-7 & LDW270-52206-3. ADDED GS13AJ-115, GS13AJ-110(2), GB511J-08-7(16) GB511J-08-8(4), MS21043L08(20), AN960C8L(40) REVISED NOTE*11 & 6 DELETED GS570J-6C(2), GR18A-6646(2), GS13AJ-506(2), GS570J-4C(2) & AN815(2)

DETAIL SPEC REQD		CLASS II ENGRG CHG	✓	CLASS I ENGRG CHG		LCD-1572 & 1843

CONTROL INFO NO. LDW280A-7939

REASON FOR EO
TO REMOVE A/S PROP FLEX HOSES & ADD ΔP-

DESCRIPTION OF EO
-1 INSTL
ADDED -3002, -3003, -3004, -3005, -3006, -3007, -3008, -3009, -3010, -3011, -3012, -3013, -3014, -3015, -3016, -3017, 3018, -3019, -1554 & -1555 DELETED -583, -590, -585, -586, -1059, -1209, -636, -1056, -1210, -1679, -534 & -535 ADDED LSC269-224-4(16) -228-4(1) -226-4(5) -240-22(1) DELETED LSC269-218-4(2) -200-4(4) -224-4(1) -234-25(1) & -205-4(1)

GRUMMAN EO RELEASE: VK 7/25/67

MODEL	EFFECTIVITY PROCURING ACT. NO.	GAEC UNIT NO.	SUB CONTR UNIT NO.
LM		LM-2 (32)	

DRAWING REVISION REQD: REVISE DWG	RECORD EO	DISPOSITION OF PARTS: REWORK	SCRAP	DATE / BY	SUPPORT	RELIAB GROUP	GROUP LEADER	STRESS GROUP	LIAISON ENGRG	PROJ ENGR	~~GOVT~~
✓		✓		7/20/67 VD1			JW 7/24/67	CW 7/24/67		7/2	7/26/67

PRIORITY: C

DRAWING TITLE
LINES INSTALLATION
PROPELLANT FEED SYSTEM
ASCENT STAGE

ENGINEERING ORDER
DRAWING NO. LDW280-52350
EO NO. D3

ISSUED BY ED BIANCHI 7/24/67 X1392
SECTION EQUIP LINES GROUP NO. 332 PL 25
CODE IDENT NO. 26512
Ⓑ GRUMMAN AIRCRAFT ENGINEERING CORP
BETHPAGE, L. I., N. Y.

ENG 32.3 REV 3-65

ENG 32.2 REV 3-65

B

GRUMMAN AIRCRAFT ENGINEERING CORP.
CODE IDENT NO. 26512
ENGINEERING ORDER

*

DWG. NO. LDW280-52350		EO NO. D4	
CONTROL INFO NO. LDW280A - 8293			

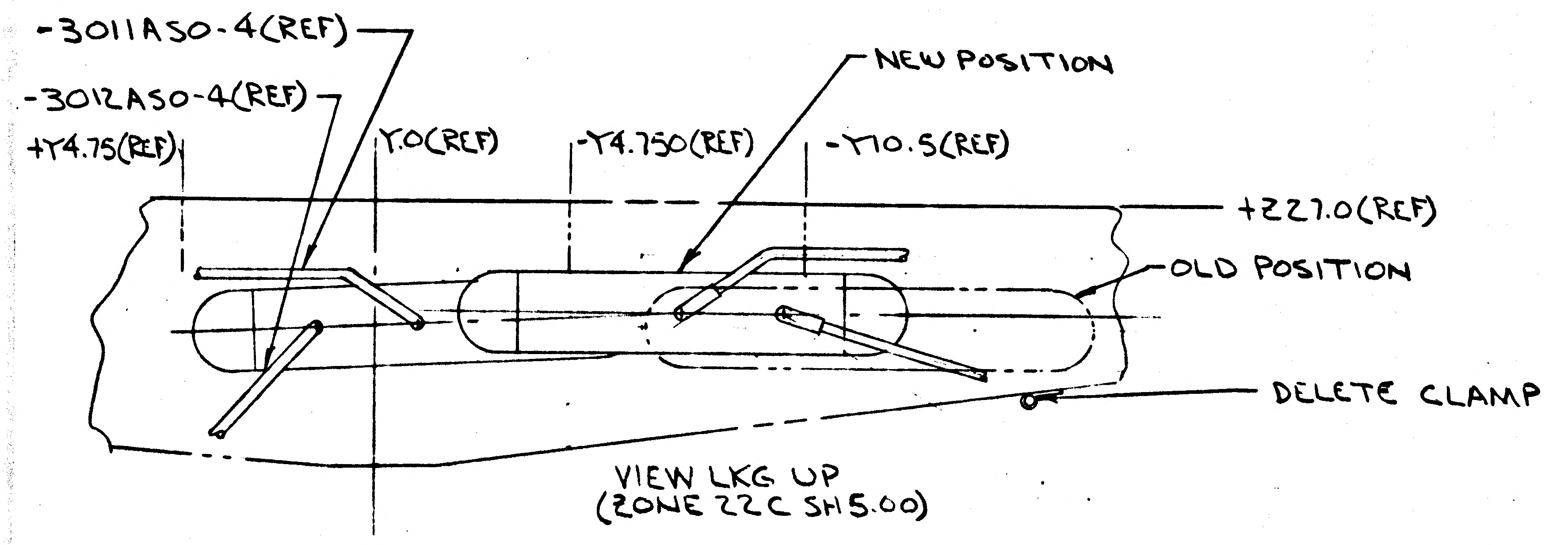

-3011ASO-4(REF)
-3012ASO-4(REF)
+Y4.75(REF)
Y.O(REF)
-Y4.750(REF)
-Y10.5(REF)
NEW POSITION
+Z27.0(REF)
OLD POSITION
DELETE CLAMP

VIEW LKG UP
(ZONE 22C SH5.00)

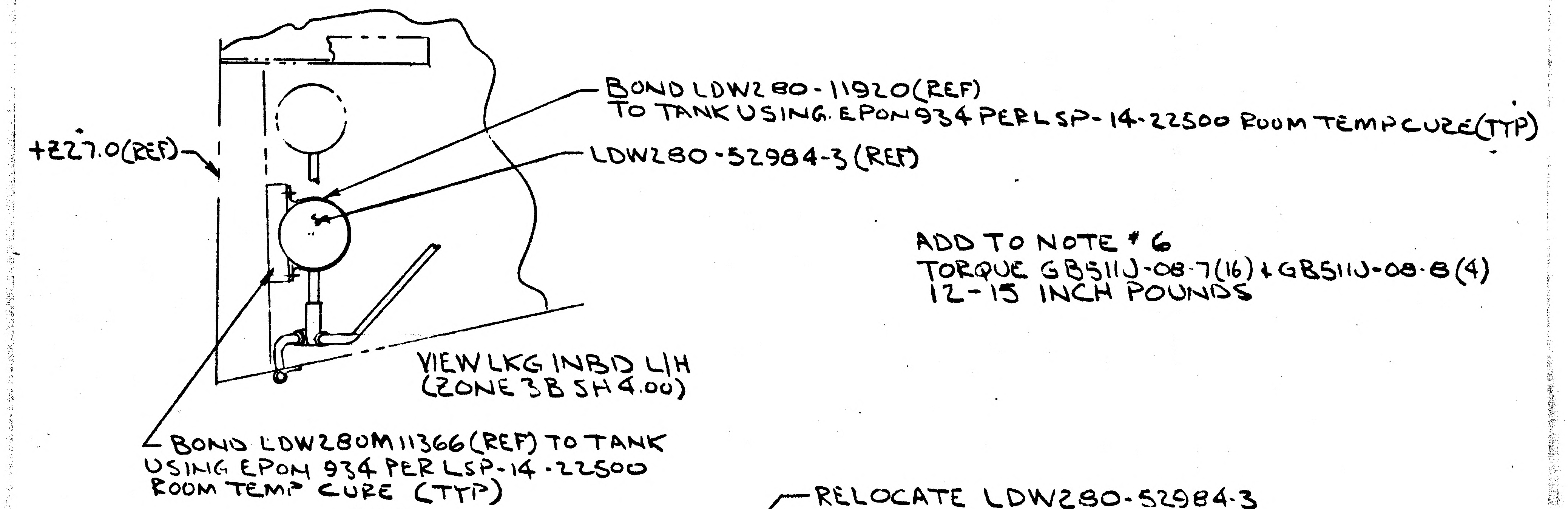

BOND LDW280-11920(REF)
TO TANK USING EPON 934 PER LSP-14-22500 ROOM TEMP CURE(TYP)
LDW280-52984-3(REF)
+Z27.0(REF)
BOND LDW280M11366(REF) TO TANK
USING EPON 934 PER LSP-14-22500
ROOM TEMP CURE (TYP)

VIEW LKG INBD L/H
(ZONE 3B SH 4.00)

ADD TO NOTE # 6
TORQUE GB511J-08-7(16) + GB511J-08-8(4)
12-15 INCH POUNDS

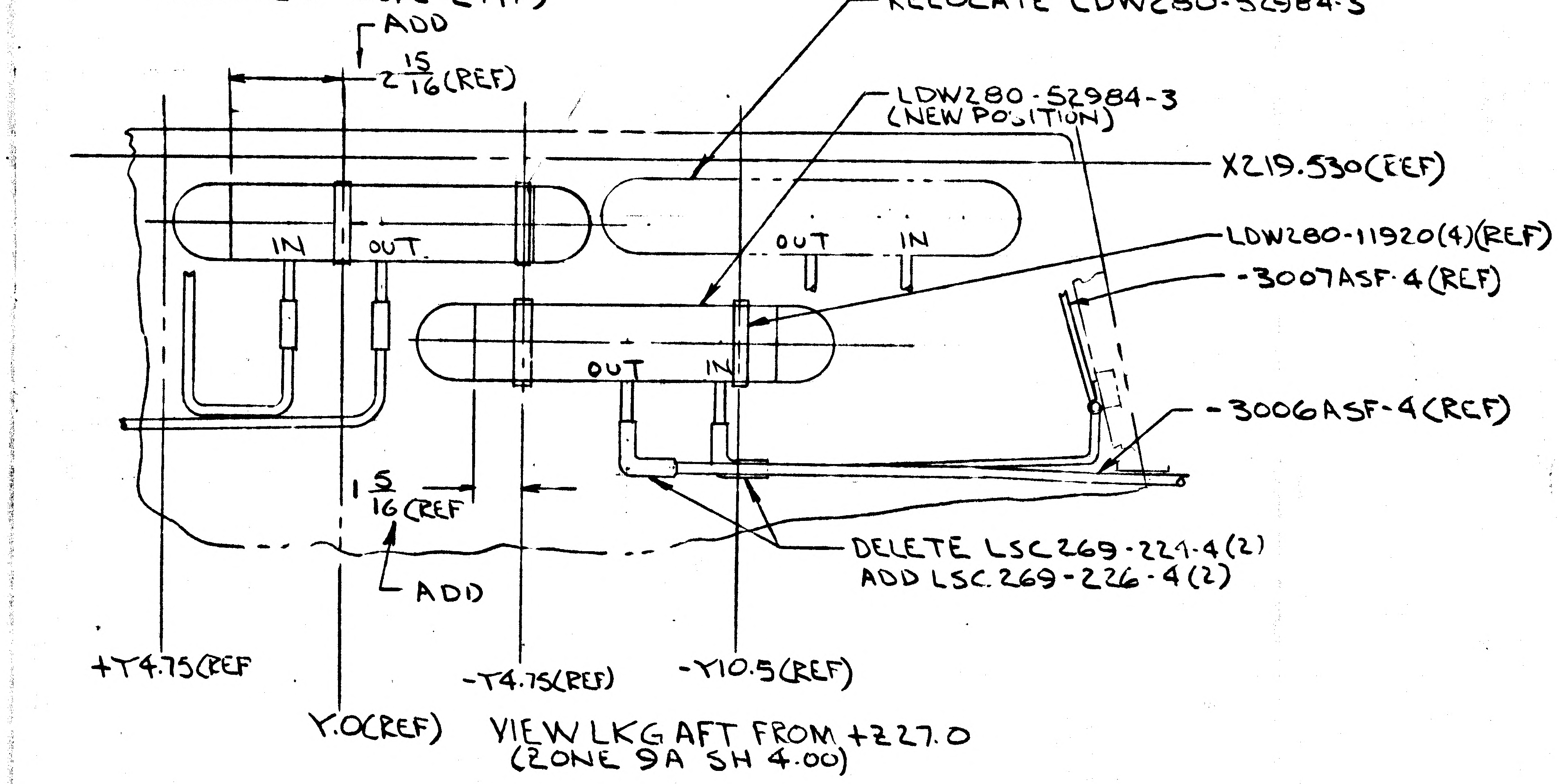

ADD
$2\frac{15}{16}$(REF)
RELOCATE LDW280-52984-3
LDW280-52984-3
(NEW POSITION)
X219.530(REF)
LDW280-11920(4)(REF)
-3007ASF-4(REF)
-3006ASF-4(REF)
IN
OUT
OUT
IN
OUT
IN
$1\frac{5}{16}$(REF
ADD
DELETE LSC269-221-4(2)
ADD LSC.269-226-4(2)
+Y4.75(REF
-Y4.75(REF)
-Y10.5(REF)
Y.O(REF)

VIEW LKG AFT FROM +Z27.0
(ZONE 9A SH 4.00)

DESCRIPTION OF EO CONT
ADDED TO NOTE 6 TORQUE INFO. FOR GB511J-08-7(16)
+ GB511J-08-8(4)

DETAIL SPEC REQ		CL II ENGRG CHG	✓	CL I ENGRG CHG		LCD 1843 OK						
REASON FOR EO TO RELOCTATE ΔP TANKS				DESCRIPTION OF EO ON-1 INSTL RELOCATED LDW280-52984-3, DELETED LSC269-224-4(2) ADDED LSC269-226-4(2) ADDED $2\frac{15}{16}$ + $1\frac{5}{16}$ REF DIMS. DELETED CLAMP, ADDED BONDING INFORMATION							GAEC EO RELEASE JK 8/4/7	
MODEL	EFFECTIVITY			DRAWING CHANGE REQD		DISPOSITION OF PARTS		APPROVED BY				
	PROCURING ACTIVITY NO.	GAEC UNIT NO.	SUB CONTR UNIT NO.	REVISE DWG	RECORD EO	REWORK	SCRAP	DATE				
LM		LM-2(32)		✓		✓			7/29/67 VD1	SUPPORT	RELIAB. GROUP	
									7/29/67 GROUP LEADER	7-31 STRESS GROUP	LIAISON ENGRG	
									8/1/67 PROJ ENGRG	8-1-67 GOVT		
				PRIORITY C	DRAWING TITLE LINES INSTL PROPELLANT FEED SYS ASCENT STAGE				DRAWING NO. LDW280-52350		EO NO. D4	

7/31/67
ISSUED BY ED BIANCHI X1392 SECTION EQUIP LINES GROUP NO. 332 PL 25

NAS 9-1100

01

B

ENG 32.1 REV 3-65

LFM

GRUMMAN AIRCRAFT ENGINEERING CORP.
CODE IDENT NO. 26512
ENGINEERING ORDER

*

DWG. NO. LDW280-52350
EO NO. D5
CONTROL INFO NO. LDW280A-8582

ZONE	9B	GS13AJ-127	S/B	GS13AK-127-XXX (SEE NOTE **)
"	9B	GS13AJ-127	S/B	GS13AK-127-XXX (SEE NOTE **)
ZONE	10B	GS13AJ-127	S/B	GS13AK-127-XXX (SEE NOTE **)

ADD NOTE **
SELECT SECONDARY DASH NUMBER OF SEAL
IN ACCORDANCE WITH LPC280-42

LDW280-52350-1 INSTL

DETAIL SPEC REQ ☐ CL II ENGRG CHG — CL I ENGRG CHG ✓ LCD 1894 5

REASON FOR EO: TO REDUCE PROPELLANT LEAKAGE

DESCRIPTION OF EO: ON-1 INSTL
ADDED NOTE **
GS13AJ-127 S/B GS13AK-127 (SEE NOTE **)

Ⓡ GAEC EO RELEASE C
JK 8/12/67

MODEL	PROCURING ACTIVITY NO. EI	GAEC UNIT NO.	SUB CONTR UNIT NO.
LM	LFM-31	LM-2 (32)	

DRAWING CHANGE REQD: REVISE DWG ✓ RECORD EO
DISPOSITION OF PARTS: REWORK ✓ SCRAP

	VD1	SUPPORT	RELIAB. GROUP	GROUP LEADER	STRESS GROUP	LIAISON ENGRG	PROJ ENGRG	~~GOVT~~
APPROVED BY	WMB			JW	FEP		WMB	
DATE	8/10/67			8/10/67	8/10		8/10/67	8-12-67

PRIORITY: C
DRAWING TITLE: LINES INSTL PROPELLANT FEED SYS ASCENT STAGE
DRAWING NO.: LDW280-52350
EO NO.: D5

ISSUED BY ED BIANCHI X1392 SECTION EQUIPLINES GROUP NO. 332 PL 25

01 / NAS 9-1100

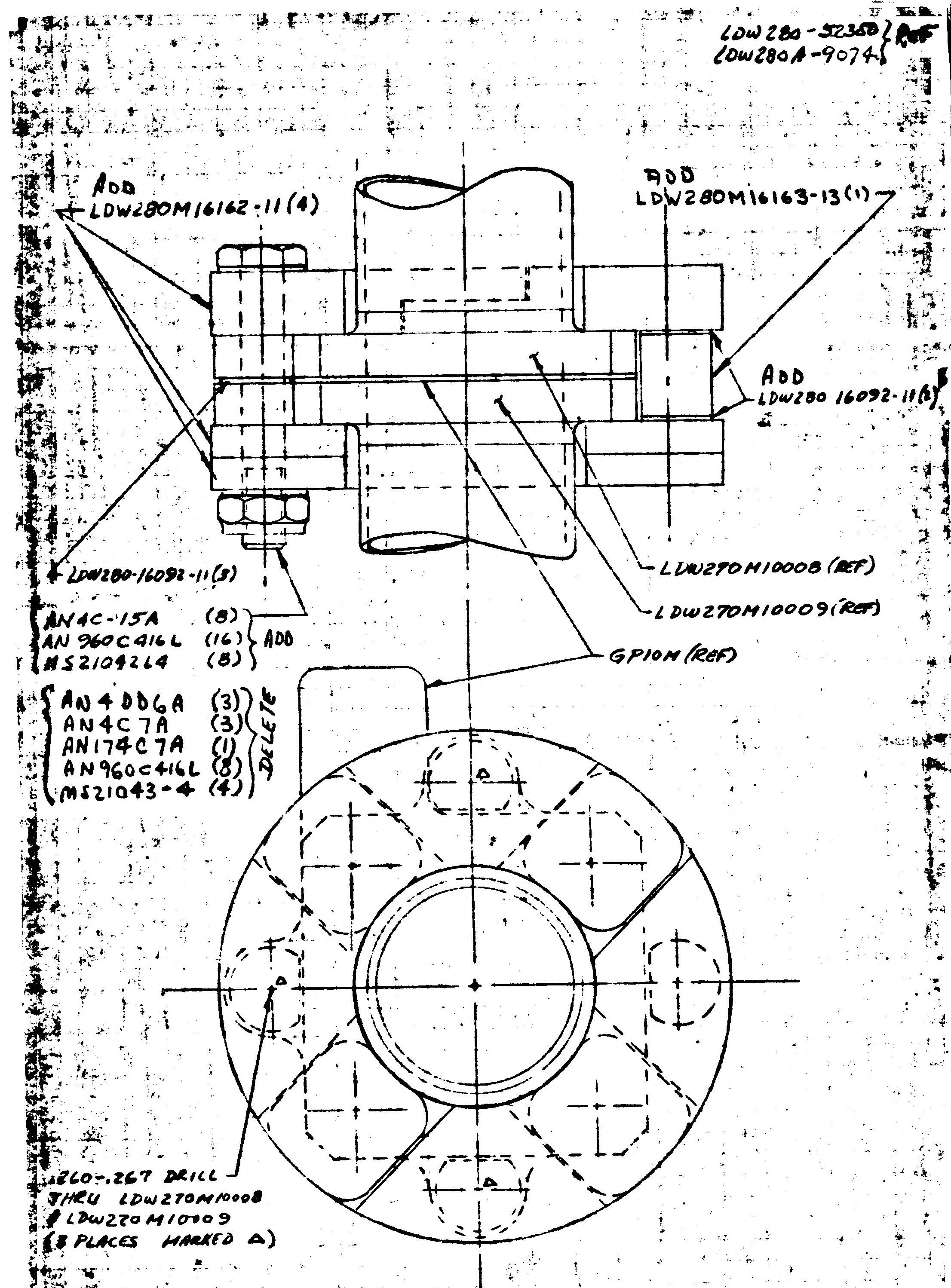
LDW280-52350 } REF
LDW280A-9074 }
ADD
LDW280M16162-11 (4)
ADD
LDW280M16163-13 (1)
ADD
LDW280 16092-11 (8)
LDW280-16092-11 (8)
LDW270M10008 (REF)
LDW270M10009 (REF)
GP10M (REF)
AN4C-15A (8)
AN960C416L (16)
MS21042L4 (8)
ADD
AN4DD6A (3)
AN4C7A (3)
AN174C7A (1)
AN960C416L (8)
MS21043-4 (4)
DELETE
.260-.267 DRILL
THRU LDW270M10008
& LDW270M10009
(8 PLACES MARKED △)

SECTION A-A (ZONE 12A, SH 4)
TYP 2 PLACES
ZONE 8B & 10B
(SEE NOTE 9 & ✱)
(REVISE SECTION A-A TO CONFIGURATION SHOWN ABOVE)

GRUMMAN AIRCRAFT ENGINEERING CORP.
CODE IDENT NO. 26512
ENGINEERING ORDER

DWG. NO.	LDW280-52350
EO NO.	D6
CONTROL INFO NO.	LDW280A-9074

THIS IS A REVISION OF EO C8
ON-1 INSTL - REVISE SECT A-A
ADD NOTES A✱-A✱ & DELETE NOTE ✱✱-✱✱ (REF EO C8)

SH 3.01 ADD NOTE A✱-A✱ FOR INSTL PROCEDURE OF BACK UP FLANGES [LDW280M16162-11] 2 PLACES IN THE MAIN TANK AREAS & INSTL OF BOLTS [NAS654V13] IN THE ENGINE BAY AREA

A✱-A✱
1. AFTER NOTE #9 HAS BEEN ACCOMPLISHED (WHICH STATES PROCEDURE FOR INSTALLING ORIFICE PLATES) THE BACK UP FLANGES WILL BE INSTALLED. SHIM, LDW280-16092-11, THICKNESS SHALL BE ADJUSTED AFTER NOTE 2 a, b & c HAVE BEEN COMPLIED WITH TO INSURE PROPER SPACER HEIGHT. (THIS DOES NOT APPLY FOR ENG BAY FLANGES)
2. FOLLOWING THE TORQUE SEQUENCE AS OUTLINED ON THE DWG (REF EO C8) INSTALL BOLTS AS SHOWN
   a. TORQUE ALL BOLTS IN SEQUENCE TO 20 IN-LBS AND REPEAT SEQUENCE UNTIL BOLTS DO NOT TURN WHEN 20 IN-LBS IS APPLIED
   b. REPEAT STEP a APPLYING 40 IN LBS
   c. REPEAT STEP a APPLYING 60 IN LBS
   d. REPEAT STEP a APPLYING 75-85 IN LBS FOR FINAL TORQUE
3. AFTER INITIAL INSTL. OF FINAL TORQUE, CHECK FOR FINAL TORQUE VALUE AFTER 72 HOURS USING PROCEDURES OF PARAGRAPH #2
4. REPEAT PARAGRAPH 3 AGAIN 72 HOURS LATER TO COMPLETE INSTL

IN FID & BIM
ZONE 9B
DELETE -1555 & ADD -1565
DELETE -1554 & ADD -1564
DELETE NAS654V9(8) & ADD NAS654V13(16)
MS21043-4(8) S1B (16)
AN960C416L(8) S1B (32)
ADD (SEE NOTE A✱-A✱)

NOTES
1. TUBE NUMBERS & WELDED ASSY NUMBERS ARE DASH NUMBERS OF LDW280-16000 IN FIELD & DESCRIPTION OF EO
2. A✱-A✱ = USE NEXT HIGHEST NOTE NUMBER

THIS IS AN ORIGINAL E.O.

B

DESCRIPTION OF EO CONT
ADDED -1565 & -1564, MS21043-4(8) S1B (16)
AN960C416L(8) S1B (32)

✓	LCD1894
REASON FOR EO	REDUCE PROPELLANT LEAKAGE
DESCRIPTION OF EO	ON-1 INSTL REVISED SECT A-A ADDED NOTE A✱-A✱ DELETED NOTE ✱✱-✱✱ (REF EO C8) DELETED AN4C7A (6) AN174C7A (2), AN960C416L (8) MS21043-4 (8) AN4DD6A (6), NAS654V9(8), -1555 & -1554
EO RELEASE	JK 9/7/7
EFFECTIVITY — BASIC UNIT NO.	LM-2 (32)
DRAWING CHANGE REQD	REVISE DWG ✓
DISPOSITION OF PARTS	REWORK ✓
APPROVED BY / DATE	9/7/7
	VDI
GROUP LEADER	9/6/67
STRESS GROUP	CW 9/6/67
PROJ ENGRG	9/6/67
PRIORITY	C
DRAWING TITLE	LINES INSTL PROPELLANT FEED SYS ASCENT STAGE
DRAWING NO.	LDW280-52350
EO NO.	D6

ISSUED BY ED BIANCHI X1392 SECTION EQUIP LINES GROUP NO. 332 PL. 25

01
NAS 9-1100

ENG 32.2 REV 3-65

B

GRUMMAN AIRCRAFT ENGINEERING CORP.
CODE IDENT NO. 26512
ENGINEERING ORDER

DWG. NO. LEO280
EO NO. 708
CONTROL INFO NO. LDW28DA9103

ADD THE FOLLOWING NOTE * TO THE DRAWINGS LISTED BELOW:

* BONDING TO BE INACCORDANCE WITH LSP 390-001

(* = USE NEXT AVAILABLE NOTE NUMBER)

DRAWING NUMBER	EFFECTIVITY	CHANGE NUMBER
LDW280 - 28363	LM-2(32) THRU LM-15(45)	B2
-51365	LM-2(32) THRU LM-15(45)	A8
-51368	LM-2(32)	A9
-51369	LM-2(32), LM-3(33)	A3
-52350	LM-2(32)	D7
-52352		A5
-52353		B2
-52355		C1
-52364		B6
-52609	LM-2(32)	A5
-53352	LM-3(33)	A9
-53353	LM-3(33)	B5
-53355	LM-3(33)	A7
-53364	LM-3(33) THRU LM-15(45)	B7
-53368	LM-3(33)	B7
-53609	LM-3(33)	A7
-54352	LM-4(34) THRU LM-15(45)	B6
-54353		B2
-54355		B5
LDW 280 - 54609	LM-4(34) THRU LM-15(45)	B7

DETAIL SPEC REQ ☐ CL II ENGRG CHG ☐ CL I ENGRG CHG ☑ LCD 1961

5

REASON FOR EO: TO UPDATE INSTL DWGS TO CURRENT BONDING REQUIREMENTS

DESCRIPTION OF EO: ADDED NOTE *

Ⓡ GAEC C EO RELEASE: VC 9/12/67

MODEL	PROCURING ACTIVITY NO.	GAEC UNIT NO.	SUB CONTR UNIT NO.
LM		NOTED	

DRAWING CHANGE REQD: REVISE DWG ✓ RECORD EO

DISPOSITION OF PARTS: NOT REQD (REWORK / SCRAP)

	VDI	SUPPORT	RELIAB. GROUP	GROUP LEADER	STRESS GROUP	LIAISON ENGRG	PROJ ENGRG	
APPROVED BY				JW				
DATE	9/8/67			9/8/67	9/11/67		9/11/67	9-12-67

PRIORITY: C

DRAWING TITLE: INSTL LINES ELECTRONIC & PIPING ASCENT STAGE & DESCENT STAGE

DRAWING NO. LEO 280

EO NO. 708

9-14-67
ISSUED BY J. DE VITA X1153 (9-7-67)
SECTION EQUIP LINES (VDI)
GROUP NO. 332
PL 25

ENG 32.1 REV 3-65

B

GRUMMAN AIRCRAFT ENGINEERING CORP.
CODE IDENT NO. 26512
ENGINEERING ORDER

DWG. NO. LDW280-52350
EO NO. D8
CONTROL INFO NO. LDW280A-9144

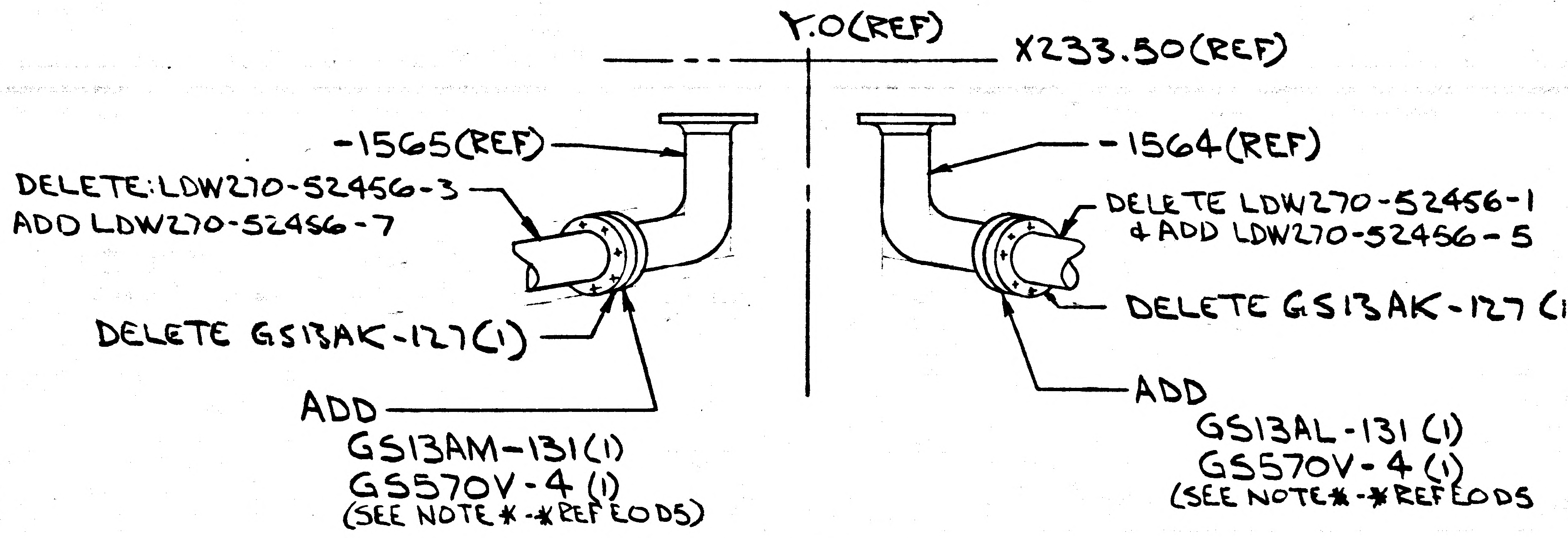
Y.O(REF)
X233.50(REF)
-1565(REF)
DELETE:LDW270-52456-3
ADD LDW270-52456-7
DELETE GS13AK-127(1)
ADD
GS13AM-131(1)
GS570V-4 (1)
(SEE NOTE*-*REF EODS)
-1564(REF)
DELETE LDW270-52456-1
+ ADD LDW270-52456-5
DELETE GS13AK-127 (1)
ADD
GS13AL-131 (1)
GS570V-4 (1)
(SEE NOTE*-*REF EODS

VIEW LKG AFT
(ZONE 9A)

LDW280-52350-1 INSTL

DETAIL SPEC REQ	☐	CL II ENGRG CHG	☐	CL I ENGRG CHG	☑ LCD 1894

REASON FOR EO: TO REDUCE PROPELLANT LEAKAGE

DESCRIPTION OF EO: ON-1
ADDED GS13AL-131(1), GS13AM-131(1) GS570V-4(2)
DELETED LDW270-52456-1&-3, ADDED LDW270-52456-5&-7
GS13AK-127 (2)

GAEC EO RELEASE: 9/15/67

MODEL	EFFECTIVITY: PROCURING ACTIVITY NO.	GAEC UNIT NO.	SUB CONTR UNIT NO.
LM		LM-2 (32)	

DRAWING CHANGE REQD: REVISE DWG	RECORD EO	DISPOSITION OF PARTS: REWORK	SCRAP
✓		✓	

		SUPPORT	RELIAB. GROUP	GROUP LEADER	STRESS GROUP	LIAISON ENGRG	PROJ ENGRG	GOVT
APPROVED BY	VD1			—	CW			
DATE	9/12/67			—	9/14/67		9/15/67	9-15-67

PRIORITY: C
DRAWING TITLE: LINES INSTL PROPELLANT FEED SYS ASCENT STAGE
DRAWING NO.: LDW280-52350
EO NO.: D8

9/15
ISSUED BY ED BIANCHI X1392 SECTION EQUIP LINES GROUP NO. 332 PL 25

'01

NAS 9-1100

GMD 32.3 REV 3-66 B

GRUMMAN AIRCRAFT ENGINEERING CORP.
CODE IDENT NO. 26512
ENGINEERING ORDER

DWG. NO. LDW280-52350 | EO NO. D9
CONTROL INFO NO. LDW280A-9138

THIS IS A REVISION OF E.O. D6

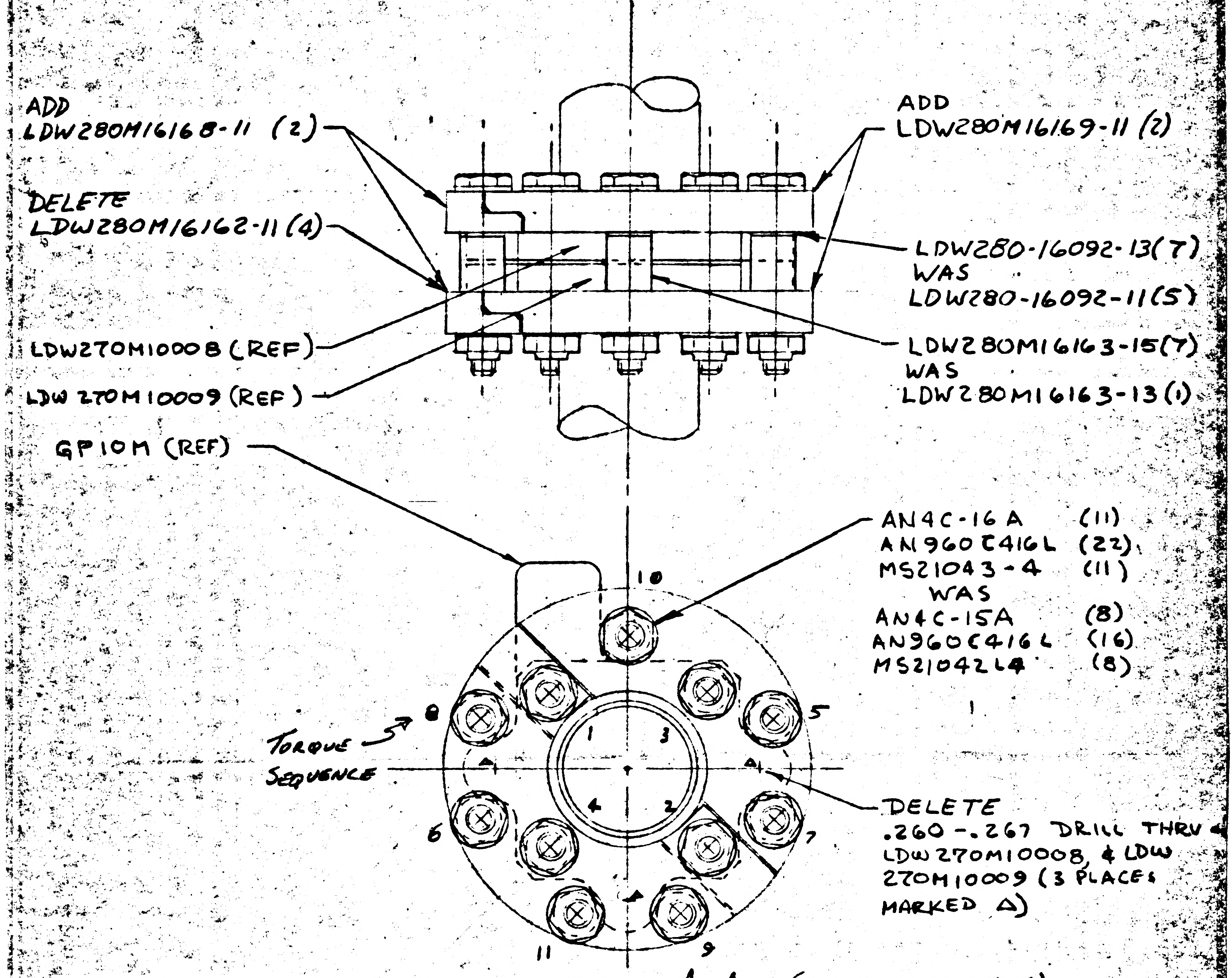

ADD
LDW280M16168-11 (2)
DELETE
LDW280M16162-11 (4)
LDW270M10008 (REF)
LDW 270M10009 (REF)
GP10M (REF)
ADD
LDW280M16169-11 (2)
LDW280-16092-13(7)
WAS
LDW280-16092-11(5)
LDW280M16163-15(7)
WAS
LDW280M16163-13(1)
AN4C-16A (11)
AN960C416L (22)
MS21043-4 (11)
WAS
AN4C-15A (8)
AN960C416L (16)
MS21042L4 (8)
TORQUE SEQUENCE
1
2
3
4
5
6
7
8
9
10
11
DELETE
.260-.267 DRILL THRU LDW270M10008, & LDW 270M10009 (3 PLACES MARKED △)

SECTION A-A (ZONE 12A, SH. 4)
TYP 2 PLACES
ZONE 8B & 10B

LDW280-52350-1 INSTL.

DESCRIPTION OF E.O.
ON -1 INSTL.
REVISED SECTION A-A
LDW280-16092-13(14) WAS -11(10)
LDW280M16163-15(14) WAS -13 (2)
ADDED LDW280M16168-11 (4) &
LDW280 M16169-11 (4)
DELETED LDW280M16162-11 (8)
AN4C-16A (22) WAS AN4C-15A (16)
AN960C416L (44) WAS (32)
MS21043-4 (22) WAS MS21042L4 (16)
DELETE .260-.267 HOLES (3)

DETAIL SPEC REQ		CL II ENGRG CHG		CL I ENGRG CHG	✓	LCD 1894

REASON FOR EO: TO REDUCE PROPELLENT LEAKAGE AT THE ORFICE FLANGE

DESCRIPTION OF EO: SEE "DESCRIPTION OF E.O" ABOVE

Ⓡ GAEC EO RELEASE: JK 9/18

MODEL	PROCURING ACTIVITY NO.	GAEC UNIT NO.	SUB CONTR UNIT NO.
LM		LM-2 (32)	

DRAWING CHANGE REQD: REVISE DWG ✓ | RECORD EO
DISPOSITION OF PARTS: REWORK ✓ | SCRAP

	VDI	SUPPORT	RELIAB GROUP	GROUP LEADER	STRESS GROUP	LIAISON ENGRG	PROJ ENGRG	GOVT
APPROVED BY				—				
DATE	9/12/67			—	9/15		9/15/67	9-16-67

PRIORITY: C
DRAWING TITLE: LINES INSTL. PROPULSION SYS. -N/S
DRAWING NO. LDW280-52350
EO NO. D9

ISSUED BY 9/15 C.H. COHEN X1392 SECTION EQUIP. LINES GROUP NO. 332 PL. 2

ENG 32.1 REV 3-65 B

GRUMMAN AIRCRAFT ENGINEERING CORP.
CODE IDENT NO. 26512 *
ENGINEERING ORDER

DWG. NO. LDW280-52350
EO NO. D10
CONTROL INFO NO. LDW280A-9842

THIS EO CANCELS EO D6. D8 & D9

LMLK

DETAIL SPEC REQ ☐ CL II ENGRG CHG ☐ CL I ENGRG CHG ✓ LCD 1894

5

REASON FOR EO: RE-WORK NOT REQUIRED FOR LMLK

DESCRIPTION OF EO: CANCELLED EO'S D6, D8 & D9

GAEC EO RELEASE: JC 10/17/67

MODEL	PROCURING ACTIVITY NO.	GAEC UNIT NO.	SUB CONTR UNIT NO.
LM		LM-2 (32)	

DRAWING CHANGE REQD: REVISE DWG ✓ RECORD EO ☐

DISPOSITION OF PARTS: REWORK ✓ SCRAP ☐

APPROVED BY		SUPPORT	RELIAB. GROUP	GROUP LEADER	STRESS GROUP	LIAISON ENGRG	PROJ ENGRG	~~GRP~~
DATE	10/17/67			10/17/67	BW 10-17		10/17/67	10-17-67
T	VDI							

PRIORITY: C

DRAWING TITLE: LINES INSTL PROPELLANT FEED SYS ASCENT STAGE

DRAWING NO.: LDW280-52350

EO NO.: D10

ISSUED BY ED BIANCHI X1392 SECTION EQUIPLINES GROUP NO. 332 PL 25

01

NAS 9-1100

GRUMMAN AIRCRAFT ENGINEERING CORP.
CODE IDENT NO. 26512
ENGINEERING ORDER

ENG 32.1 REV 3-65

DWG. NO.	LDW280-52350	EO NO.	E1
CONTROL INFO NO.	LDW280B0092		

IN F/D & B/M OF -5

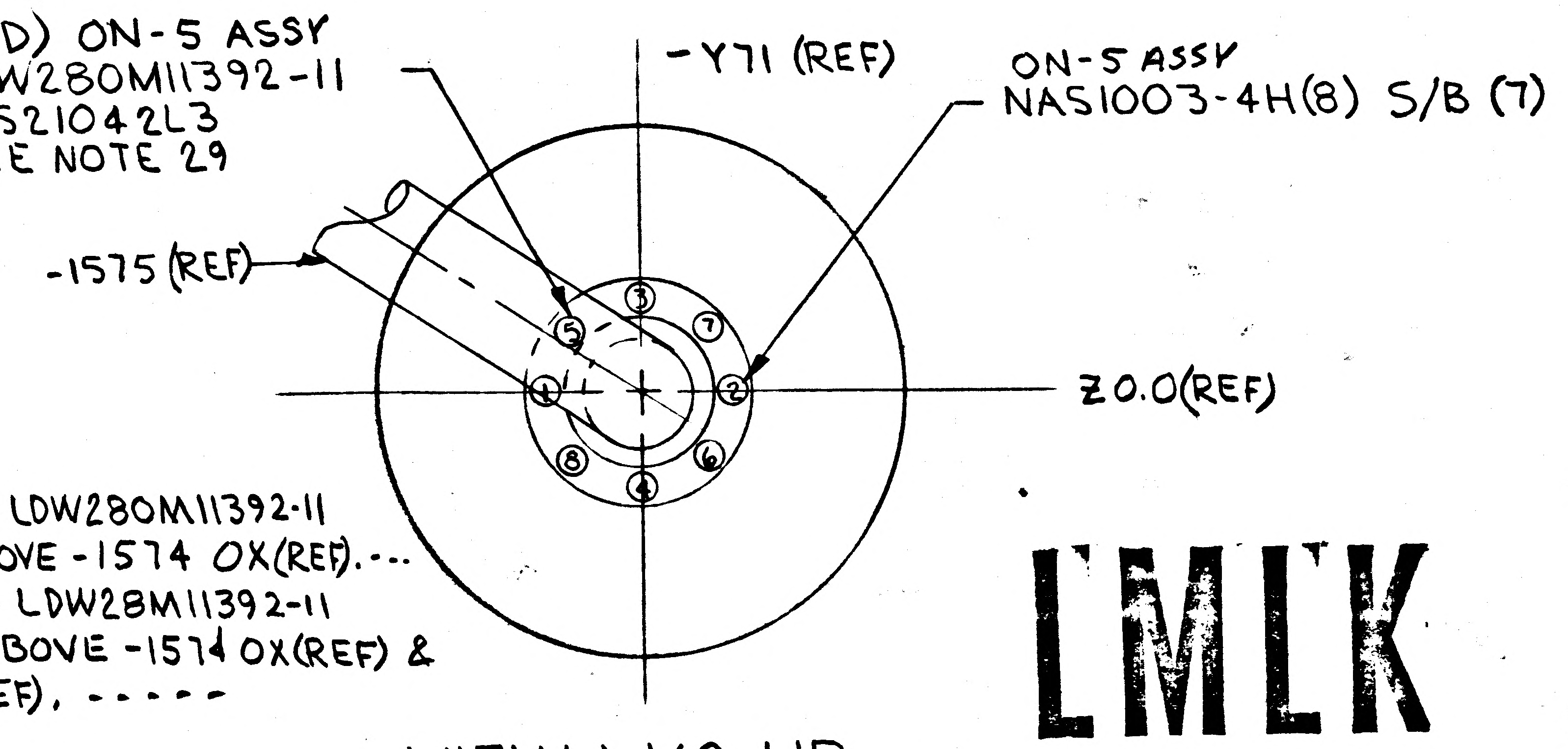
(ADD) ON-5 ASSY
LDW280M11392-11
MS21042L3
SEE NOTE 29

ON-5 ASSY
NAS1003-4H(8) S/B (7)

(REVISE)
NOTE 29. ----- LDW280M11392-11
IS LOCATED ABOVE -1574 OX(REF). ---
S/B ------- LDW28M11392-11
IS LOCATED ABOVE -1574 OX(REF) &
1575 FUEL(REF). -----

VIEW LKG UP
SH 5 ZONE 18B

LMLK

DESC. CONT. ADDED "& -1575 FUEL(REF)" TO NOTE 29.

DETAIL SPEC REQ		CL II ENGRG CHG		CL I ENGRG CHG	LCD 1894

⑤

REASON FOR EO	DESCRIPTION OF EO	Ⓡ GAEC EO RELEASE
BOLT WILL NOT FIT	IN F/D & BM ADDED LDW280M11392-11(1), MS21042L3(1), SEE NOTE 29. DELETED NAS1003-4H(1).	JC 10/27/67

MODEL	EFFECTIVITY			DRAWING CHANGE REQD		DISPOSITION OF PARTS		APPROVED BY								
	PROCURING ACTIVITY NO.	GAEC UNIT NO.	SUB CONTR UNIT NO.	✓		✓		DATE	10/26/67			10/26/67	10/26		10/26	10-27-67
LM		LM2 (32)		REVISE DWG	RECORD EO	REWORK	SCRAP	A	VDI	SUPPORT	RELIAB. GROUP	GROUP LEADER	STRESS GROUP	LIAISON ENGRG	PROJ ENGRG	

PRIORITY	DRAWING TITLE	DRAWING NO.	EO NO.
C	LINES INSTL- PROPELLANT FEED SYSTEM ASCENT STAGE	LDW280-52350	E1

11/3
ISSUED BY J FARRELL X 1392 SECTION VDI GROUP NO. 332 PL 25

01

NAS 9-1100

ENG 32.1 REV 3-65

GRUMMAN AIRCRAFT ENGINEERING CORP.
CODE IDENT NO. 26512
ENGINEERING ORDER

DWG. NO. LEO 280
EO NO. 769
CONTROL INFO NO. LDW280B0076

DELETE NOTE * FROM THE FOLLOWING DWGS

DRAWING NUMBER	EFFECTIVITY	CHANGE NUMBER	NOTE *
LDW280-52353 ✓	LM-2(32)	C1	8
-52354 ✓	LM-2(32)	A6	3
-52355 ✓	LM-2(32)	D1	8
-52356 ✓	LM-2 (32)	A8	5
-52351 ✓	LM-2 (32)	A9	5
-52350 ✓	LM-2(32)	E1	31
LDW280-52608	LM-2(32)	D2	7

5

DETAIL SPEC REQ ☐ CL II ENGRG CHG ☐ CL I ENGRG CHG ✓ LCD 1961

REASON FOR EO: BONDING NOTE NOT REQD

DESCRIPTION OF EO: DELETED NOTE *

GAEC EO RELEASE: C

MODEL	PROCURING ACTIVITY NO.	GAEC UNIT NO.	SUB CONTR UNIT NO.
LM		LM-2(32)	

DRAWING CHANGE REQD: REVISE DWG ✓ RECORD EO

DISPOSITION OF PARTS: NOT REWORK REQD SCRAP

APPROVED BY / DATE: E; VDI 10/24/67; SUPPORT; RELIAB. GROUP; GROUP LEADER 10/26/67; STRESS GROUP 10/27/67; LIAISON ENGRG; PROJ ENGRG 10/31/67; 10/30/67

PRIORITY: C
DRAWING TITLE: LINES INSTL PIPING ASCENT STAGE & DESCENT STAGE
DRAWING NO. LEO280
EO NO. 769

11-2-67
ISSUED BY J. DE VITA X1153 (10-25-67) SECTION EQUIP LINES (VDI) GROUP NO. 332 PL 25

01

NAS 9-1100

GRUMMAN AIRCRAFT ENGINEERING CORP.
CODE IDENT NO. 26512
ENGINEERING ORDER

ENG 32.1 REV 3-65

B

DWG. NO. LDW280-52350		EO NO. EZ	
CONTROL INFO NO. LDW280 B 0121			

FROM F/D SECT F-F
REMOVE .005 MAX GAP PERMISSIBLE AFTER ASSY

ADD TO B/M FOR -5 LDW280-51888-1 (QTY 1)

LMLK

3

DETAIL SPEC REQ		CL II ENGRG CHG		CL I ENGRG CHG	✓ LCD 1894

REASON FOR EO: TO REDUCE PROPELLANT LEAKAGE

DESCRIPTION OF EO: FROM F/D REMOVED .005 MAX GAP PERMISSIBLE AFTER ASSY, ADDED TO B/M FOR -5 LDW280-51888-1 (QTY-1)

Ⓡ GAEC EO RELEASE: ✓ JK 10/31/67

MODEL	EFFECTIVITY: PROCURING ACTIVITY NO.	GAEC UNIT NO.	SUB CONTR UNIT NO.
LM		LM-2 (32)	

DRAWING CHANGE REQD: REVISE DWG	RECORD EO	DISPOSITION OF PARTS: REWORK	SCRAP
✓		✓	

APPROVED BY	Gap			JW	CW AN		WRB	JBf
DATE	10/27/67			102767	10/30/67		10/30/67	10-31-67
A	VDI	SUPPORT	RELIAB. GROUP	GROUP LEADER	STRESS GROUP	LIAISON ENGRG	PROJ ENGRG	

PRIORITY	DRAWING TITLE	DRAWING NO.	EO NO.
C	LINES INSTL PROP. FEED SYS. ASCENT STAGE	LDW280-52350	EZ

11/06
ISSUED BY ED BIANCHI X1392 SECTION EQUIPLINES GROUP NO. 332 PL 25

01

NAS 9-1100

ENG 33.1 REV 3-65

GRUMMAN AIRCRAFT ENGINEERING CORP.
CODE IDENT NO. 26512
ENGINEERING ORDER

DWG. NO. LDW280-52350		EO NO. E4
CONTROL INFO NO. LM5-17229		

CHANGE NUMBER E3 WAS E1
REF LDW 280-52350
ON LEO 280-769

RELEASED BY LIAISON

DETAIL SPEC REQ	☐	CL II ENGRG CHG	☑	CL I ENGRG CHG	☐

REASON FOR EO: INCORRECT CHANGE No. ISSUED ON LEO 280-769

DESCRIPTION OF EO: CORRECTED CHANGE NUMBER FOR LEO 280-769 E3 WAS E1

GAEC EO RELEASE (5)

MODEL	PROCURING ACTIVITY NO.	GAEC UNIT NO.	SUB CONTR UNIT NO.
LM		NOT REQD	

DRAWING CHANGE REQD: REVISE DWG	RECORD EO	DISPOSITION OF PARTS: REWORK	SCRAP	APPROVED BY		SUPPORT	RELIAB. GROUP	GROUP LEADER	STRESS GROUP	LIAISON ENGRG	PROJ ENGRG	GAEC
✓		NOT	REQD	DATE	Jal 11/11/67 VIII				—	11-1-67	WEB 11/11/67	Botti 11-1-67

PRIORITY	DRAWING TITLE	DRAWING NO.	EO NO.
E	LINES INSTALLATION PROPELLANT FEED SYSTEM A/S	LDW280-52350	E4

ISSUED BY LIAISON, D. VALENZA SECTION ______ GROUP NO. ______ PL ______

01

NAS 9-1100

B

ENG 32.1 REV 3-65

GRUMMAN AIRCRAFT ENGINEERING CORP.
CODE IDENT NO. 26512
ENGINEERING ORDER

DWG. NO. LDW280-52350
EO NO. E5
CONTROL INFO NO. LDW280B0307

ADD TO NOTE 26 STEP a

"a" AFTER INITIAL INSTALLATION, EACH BOLT PATTERN MUST BE RETORQUED IN THE TIGHTENING DIRECTION AND IN SEQUENCE TO PRINT VALUES AT 72 HOUR INTERVALS, REPEAT TWICE, I.E, THE INITIAL INSTALLATION PLUS TWO TORQUES.

LMLK

DETAIL SPEC REQ		CL II ENGRG CHG		CL I ENGRG CHG	✓	LCD 1894	(5)

REASON FOR EO: TO REDUCE PROPELLANT LEAKAGE

DESCRIPTION OF EO: ADDED TO NOTE 26 STEP "a"

GAEC EO RELEASE (R): JK 11/7/67

MODEL	EFFECTIVITY		
	PROCURING ACTIVITY NO.	GAEC UNIT NO.	SUB CONTR UNIT NO.
LM		LM-2(32)	

DRAWING CHANGE REQD		DISPOSITION OF PARTS	
✓		✓	
REVISE DWG	RECORD EO	REWORK	SCRAP

APPROVED BY					CW			
DATE	11/6/67			11/06/67	11/6/67		11/6/67	11-7-67
A	VDI	SUPPORT	RELIAB. GROUP	GROUP LEADER	STRESS GROUP	LIAISON ENGRG	PROJ ENGRG	~~GOVT~~

PRIORITY	DRAWING TITLE	DRAWING NO.	EO NO.
C	LINES INSTL PROPELLANT FEED SYS ASCENT STAGE	LDW280-52350	E5

1/20

ISSUED BY ED BIANCHI X1392 SECTION EQUIPLINES GROUP NO. 332 PL 25

01

NAS 9-1100

ENG 32.1 REV 3-65

GRUMMAN AIRCRAFT ENGINEERING CORP.
CODE IDENT NO. 26512
ENGINEERING ORDER

DWG NO	LDW280-52350	EO NO.	E6
CONTROL INFO NO.	LM-5-17266		

IN NOTE 10 MS20995F32 S/B MS20995C32

RELEASED BY LIAISON

DETAIL SPEC REQ		CL II ENGRG CHG	✓	CL I ENGRG CHG		

REASON FOR EO	DESCRIPTION OF EO	GAEC EO RELEASE
CARBON STEEL SAFETY WIRE NOT ACCEPTABLE.	IN NOTE #10 MS20995C32 WAS MS20995F32.	② 3/4 JK

MODEL	EFFECTIVITY PROCURING ACTIVITY NO.	EFFECTIVITY GAEC UNIT NO.	EFFECTIVITY SUB CONTR UNIT NO.
LM		LM-2(32)	

DRAWING CHANGE REQD: REVISE DWG	DRAWING CHANGE REQD: RECORD EO	DISPOSITION OF PARTS: REWORK	DISPOSITION OF PARTS: SCRAP			SUPPORT	RELIAB. GROUP	GROUP LEADER	STRESS GROUP	LIAISON ENGRG	PROJ ENGRG	~~GOVT~~
✓		✓		APPROVED BY								
				DATE	11/11/67 VDI				11-9-67	11-8-67	11/11/67	11-9-67

PRIORITY	DRAWING TITLE	DRAWING NO.	EO NO.
C	LINES INSTC. A/S-PROP. FEED SYSTEM	LDW280-52350	E6

ISSUED BY LIAISON J. JARVIS SECTION VDI GROUP NO. 280 PL 25

01

NAS 9-1100

RELEASED BY LIAISON

ENG 32.1 REV. 3-66

GRUMMAN AIRCRAFT ENGINEERING CORP.
CODE IDENT NO. 26512
ENGINEERING ORDER

DWG. NO. LDW280-52350		EO NO. E7
CONTROL INFO NO. LM5-17240		

ON -3 INSTL   CHANGE SHIM CALLOUT AND HARDWARE AS SHOWN

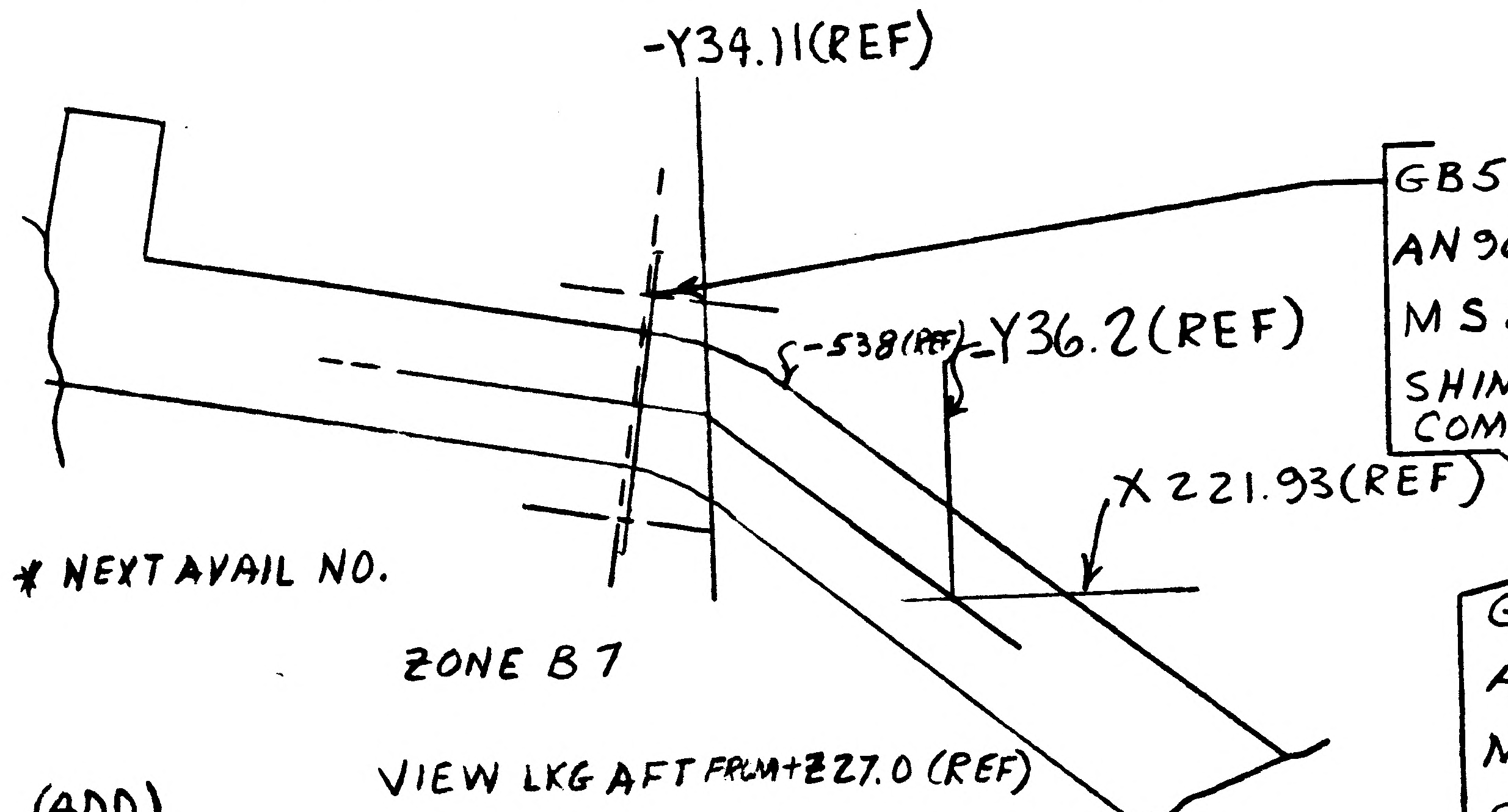

GB511J-3-3(2)
AN960D10L (4)
MS21042L3(2)
SHIM PER MIL-S-22499
COMP I TYPE 1 CLASS II
(.093 MAX)

SHOULD BE

GB511J-3-5 (2)
AN960D10L (4)
MS21042L3 (2)
SHIM AS REQD .188 MAX
(SEE NOTE *)

* NEXT AVAIL NO.

ZONE B7

VIEW LKG AFT FROM +Z27.0 (REF)

(ADD)
NOTE * SHIM MATERIAL 2024T3 AL ALLOY SHT QQ-A-250/4 FINISH 76 BOND SHIM TO LDW280M10667-1 USING EC2216 PER LSP 14-22500 CURE RANGE I

DETAIL SPEC REQ		CL II ENGRG CHG	✓	CL I ENGRG CHG

REASON FOR EO: RE DESIGN OF LINES MOVES FLANGE ON PIPE AWAY FROM MOUNTING STRUCTURE ON 27 BULKHEAD.

DESCRIPTION OF EO: -3 F/D+B/M GB511J-3-5(2) WAS GB511J-3-3(2). SHIM AS REQD .188 MAX (SEE NOTE *) WAS SHIM PER MIL-S-22499 COMP I TYPE 1 CLASS II .093 MAX. ADDED NOTE *

GAEC EO RELEASE: Ⓡ 5 JK 32

MODEL	EFFECTIVITY: PROCURING ACTIVITY NO.	GAEC UNIT NO.	SUB CONTR UNIT NO.
LM		LM-2 (32)	

DRAWING CHANGE REQD		DISPOSITION OF PARTS	
REVISE DWG	RECORD EO	REWORK	SCRAP
✓		✓	

APPROVED BY		SUPPORT	RELIAB. GROUP	GROUP LEADER	STRESS GROUP	LIAISON ENGRG	PROJ ENGRG	GOVT
DATE	11/11/67 VDI			—	11-9-67	11-3-67	11/11/67	11-10-67

PRIORITY	DRAWING TITLE	DRAWING NO.	EO NO.
C	LINES INSTL PROPELLANT FEED SYSTEM ASCENT STAGE	LDW280-52350	E7

ISSUED BY LIAISON J. GRASSIANO X86755 SECTION VDI GROUP NO. 280 PL 25

01

NAS 9-1100

ENG 32.2 REV 3-65

GRUMMAN AIRCRAFT ENGINEERING CORP.
CODE IDENT NO. 26512
ENGINEERING ORDER

DWG. NO. LDW280-52350		EO NO. E8
CONTROL INFO NO. LDW280B0394		

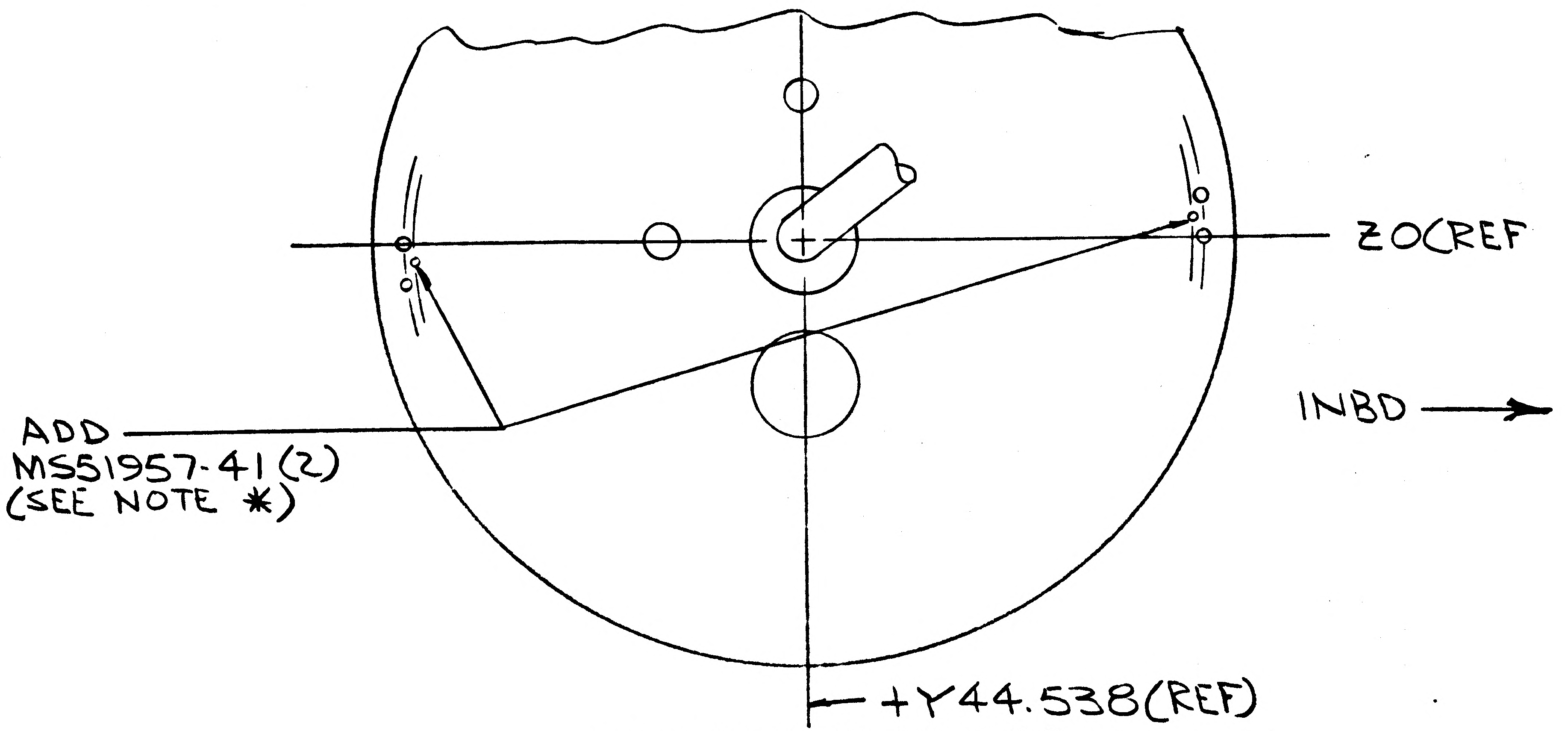

VIEW LKG UP OX SIDE
(ZONE 24B SH 5)

ADD NOTE *
* REMOVE MS51957-41 SCREW PRIOR TO LEAK CHECK OF PRIMARY SEAL. AFTER CHECK HAS BEEN PERFORMED, RE-INSTALL SCREWS PER LPC280-47, TORQUE TO 15-20 IN LBS.

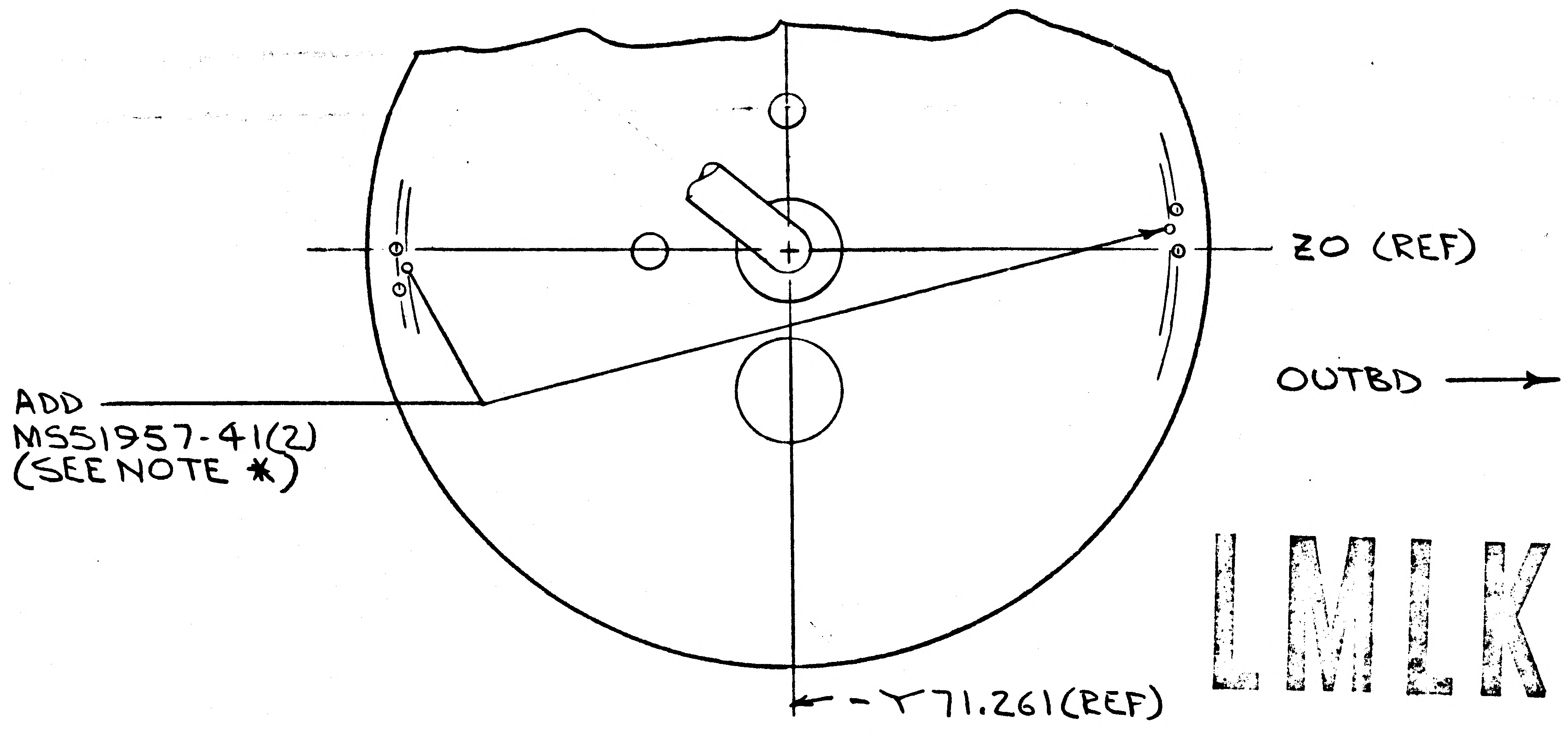

VIEW LKG UP FUEL SIDE
(ZONE 18B SH 5)

LMLK

LDW280-52350-1 INSTL

DETAIL SPEC REQ		CL II ENGRG CHG		CL I ENGRG CHG	✓LCD1894	(5)
REASON FOR EO: TO REDUCE PROPELLANT LEAKAGE					DESCRIPTION OF EO: ON-1 ADDED NOTE *, ADDED MS51957-41 (4)	GAEC EO RELEASE: C JK 11/14/67

MODEL	EFFECTIVITY: PROCURING ACTIVITY NO.	GAEC UNIT NO.	SUB CONTR UNIT NO.
LM		LM-2(32)	

DRAWING CHANGE REQD: REVISE DWG	RECORD EO	DISPOSITION OF PARTS: REWORK	SCRAP
✓		✓	

APPROVED BY	Jal							Botl	
DATE	11/13/67				11/13/67		11/13/67	11-13-67	
A	VDI	SUPPORT	RELIAB. GROUP	GROUP LEADER	STRESS GROUP	LIAISON ENGRG	PROJ ENGRG	~~SQPT~~	

PRIORITY	DRAWING TITLE	DRAWING NO.	EO NO.
C	LINES INSTL PROPELLANT FEED SYS ASCENT STAGE	LDW280-52350	E8

ISSUED BY ED BIANCHI X1392 SECTION EQUIPLINES (VDI) GROUP NO. 332 PL 25

01
NAS 9-1100

ENG 32.1 REV 3-65

GRUMMAN AIRCRAFT ENGINEERING CORP.
CODE IDENT NO. 26512
ENGINEERING ORDER

DWG. NO. LDW280-52350
EO NO. E9
CONTROL INFO NO. LM-5-17366

IN B/M (ON-5) LSC 270-826-13 (S/B) LSC 270-826-11;
(ON-7) LSC270-826-11 (S/B) LSC 270-826-13;

RELEASED BY LIAISON

DETAIL SPEC REQ ☐ CL II ENGRG CHG ☑ CL I ENGRG CHG ☐

REASON FOR EO: INCORRECT CALL OUTS IN B/M

DESCRIPTION OF EO: IN B/M
(ON-5) LSC270-826-11 (WAS) LSC270-826-13;
(ON-7) LSC270-826-13 (WAS) LSC270-826-11;

GAEC EO RELEASE: JM

MODEL	PROCURING ACTIVITY NO.	GAEC UNIT NO.	SUB CONTR UNIT NO.
LM		LM2 (32)	

DRAWING CHANGE REQD: REVISE DWG ✓ RECORD EO
DISPOSITION OF PARTS: REWORK ✓ SCRAP

			SUPPORT	RELIAB. GROUP	GROUP LEADER	STRESS GROUP	LIAISON ENGRG	PROJ ENGRG	
APPROVED BY	JHS				—			JGP	
DATE	12/2/67				—	11/17/67	11/16/67	12/2/67	11/18/67
	VDI								

PRIORITY: C
DRAWING TITLE: INSTL INSTL, PROPELLANT FEED SYSTEM, ASCENT STAGE
DRAWING NO.: LDW280-52350
EO NO.: E9

ISSUED BY LIAISON M.D. REYES X86755 SECTION VDI / J. WOLF GROUP NO. 335 PL 25

01

NAS 9-1100

RELEASED BY LIAISON

GRUMMAN AIRCRAFT ENGINEERING CORP.
CODE IDENT NO. 26512
ENGINEERING ORDER

ENG 32.2 REV 3-65

DWG NO. LDW280-52350	EO NO. E10
CONTROL INFO NO. LM-5-17319	

IN FLD & B/M (ON-7)

(ADD)
NOTE *
BOND LDW280-16005-19 TO LDW280M10895-1 WITH EPON 934 PER LSP 14-22500 CURE RANGE 1.

PLANNING INFOR. ONLY
INTEND ACCOMP VIA MRR 05-0613, REINDENTIFY MRR 05-0613-1 DOUBLER ON INSTL TO LDW280-16005 -19.

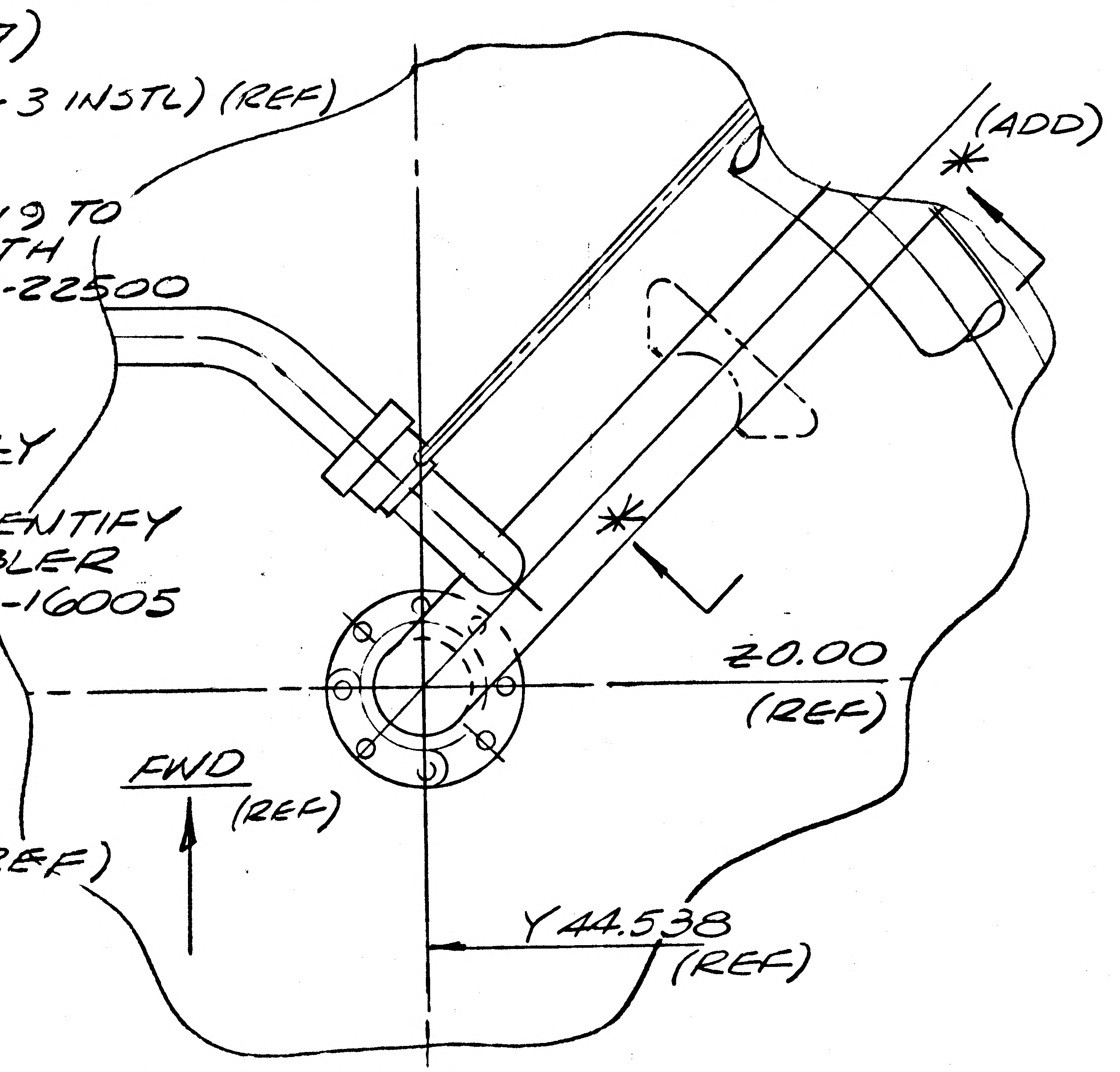
(ON-3 INSTL) (REF)
(ADD)
*
20.00
(REF)
FWD
(REF)
Y44.538
(REF)

VIEW LKG UP
RH SIDE (REF)

(ADD)
MS20613C4 (3)
DIP IN EPON 919

(ADD)
LDW280-16005-19
(ON FS OF LDW280M 10895-1) SEE NOTE *

(RWK FOR EXISTING HOLES)
CSK FS IN LDW280-16005-19 AND TOUCH CSK NS IN LDW280M10895-1, USE MS20427M6 (2)

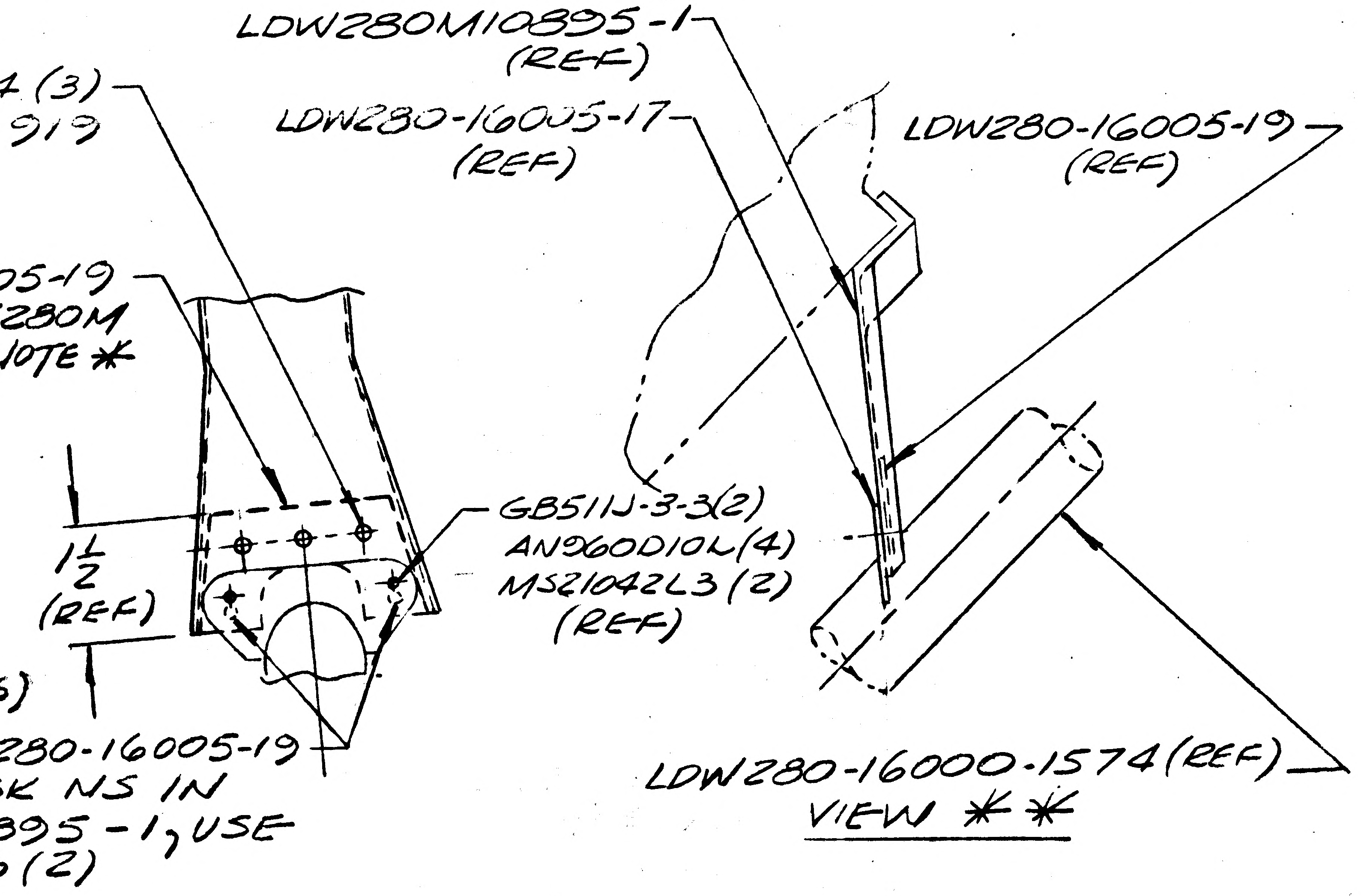
LDW280M10895-1
(REF)
LDW280-16005-17
(REF)
LDW280-16005-19
(REF)
1/2
(REF)
GB511J-3-3(2)
AN960D10L(4)
MS21042L3 (2)
(REF)
LDW280-16000-1574 (REF)

VIEW **

* & ** USE NEXT AVAIL NOTE # & LETTER

DETAIL SPEC REQ	☐	CL II ENGRG CHG	✓	CL I ENGRG CHG	☐

REASON FOR EO	DESCRIPTION OF EO	GAEC EO RELEASE
NEW MTG HOLES REQ'D IN LDW280M 10895, DUE TO RWK BY EO56 ON LDW280-16000.	IN FLD & B/M (ON-7) ADDED LDW280-16005-19, VIEW ** & NOTE *	Ⓡ C 32 05 035

MODEL	EFFECTIVITY: PROCURING ACTIVITY NO.	GAEC UNIT NO.	SUB CONTR UNIT NO.
LM		LM2 (32)	

DRAWING CHANGE REQD: REVISE DWG	RECORD EO	DISPOSITION OF PARTS: REWORK	SCRAP
✓	·	✓	

	APPROVED BY							
DATE	11/27/67				11-22-67	11-22-67	11/27/67	11/22/67
	VDI	SUPPORT	RELIAB. GROUP	GROUP LEADER	STRESS GROUP	LIAISON ENGRG	PROJ ENGRG	

PRIORITY	DRAWING TITLE	DRAWING NO.	EO NO.
C	LINES INSTL, PROPELLANT FEED SYSTEM, ASCENT STAGE	LDW280-52350	E10

ISSUED BY LIAISON M.D.REYES X86755 SECTION VDI/ J.WOLF GROUP NO. 335 PL 25

01
NAS 9-1100

ENG 32.1 REV 3-65

GRUMMAN AIRCRAFT ENGINEERING CORP.
CODE IDENT NO. 26512
ENGINEERING ORDER

DWG. NO. LDW280-52350
EO NO. F1
CONTROL INFO NO. LM-5-17440

IN FLD OF DWG (SHT 3.00)
REVISE
NOTE 15
f. CONNECT HELIUM SUPPLY TO GP9422 -- ETC
(S/B)
CONNECT HELIUM SUPPLY TO GP9442 & GP9443 -- -ETC

RELEASED BY LIAISON

DETAIL SPEC REQ		CL II ENGRG CHG	✓	CL I ENGRG CHG		(5)

REASON FOR EO: NOTE #15 INCORR INCORRECT AS PER LEO280-513

DESCRIPTION OF EO: IN FLD NOTE #15, f. CONNECT--ETC..GP9442 & GP9443-ETC (WAS) CONNECT---ETC-GP9422--ETC

GAEC EO RELEASE: (6) JK

MODEL	EFFECTIVITY: PROCURING ACTIVITY NO.	GAEC UNIT NO.	SUB CONTR UNIT NO.
LM		NONE	'

DRAWING CHANGE REQD: REVISE DWG ✓ RECORD EO
DISPOSITION OF PARTS: REWORK NOT SCRAP REQ'D

APPROVED BY	JAH			—	MBS	CR	JAP	JH
DATE	12/21/67			—	12/4/67	12/7/67	12/21/67	12-4-67
	VDI	SUPPORT	RELIAB. GROUP	GROUP LEADER	STRESS GROUP	LIAISON ENGRG	PROJ ENGRG	~~GOVT~~

PRIORITY: E
DRAWING TITLE: LINES INSTL, PROPELLANT FEED SYSTEM ASCENT STAGE
DRAWING NO.: LDW280-52350
EO NO.: F1

ISSUED BY & LIAISON M.O. REYES X86155 SECTION VDI / J. WOLF GROUP NO. 335 PL 25

01

NAS 9-1100

ENG 32.2 REV 3-65

GRUMMAN AIRCRAFT ENGINEERING CORP.
CODE IDENT NO. 26512
ENGINEERING ORDER

DWG. NO. LEO 280 | EO NO. 816
CONTROL INFO NO. LM-5-17618

TO THE FOLLOWING DRAWING'S ADD NOTE ✱ IN F/D

✱ NOTE
ANY TWO ADJACENT BOLTS MAY BE REMOVED, REINSTALLED AND TORQUED TO PRINT VALVUES WITHOUT REPEATING THE 72 HRS TORQUE CYCLE

DRAWING NO ✱	DRAWING TITLE	CHANGE NO.	EFFECTIVITY
✓ LDW 280-52608 -3 & -5	LINE INSTALLATION PROP. & PRESSURIZATION SYSTEM D/S	D6	LM-2 (32)
✓ LDW 280-53608 -3 & -5	LINE INSTALLATION PROP. & PRESSURIZATION SYSTEM D/S	E1	LM-3 (33)
✓ LDW 280-54608 -1, -3, -5, -19	LINE INSTALLATION PROP. & PRESSURIZATION SYSTEM D/S	D5	LM-4 (34) THRU LM-15 (45)
✓ LDW 280-52350 -3	LINES INSTALLATION PROPELLANT FEED SYSTEM A/S	F2	LM-2 (32)
LDW 280-53981 -1	LINE INSTALLATION PROPELLANT FEED SYSTEM A/S	B6	LM-3 (33)
LDW 280-54981 -1	LINE INSTALLATION PROPELLANT FEED SYSTEM A/S	B3	LM-4 (34) THRU LM-15 (45)

✱USE NEXT AVAILABLE NOTE NO.

RELEASED BY LIAISON (6)

DETAIL SPEC REQ ☐ | CL II ENGRG CHG ☑ | CL I ENGRG CHG ☐

REASON FOR EO: REMOVAL TECHNIQUE

DESCRIPTION OF EO: IN F/D ADDED NOTE ✱ FOR ✱

GAEC EO RELEASE: JC

MODEL	EFFECTIVITY: PROCURING ACTIVITY NO.	GAEC UNIT NO.	SUB CONTR UNIT NO.
LM		NOTED	

DRAWING CHANGE REQD: REVISE DWG ✓ | RECORD EO
DISPOSITION OF PARTS: REWORK ✓ | SCRAP

		SUPPORT	RELIAB. GROUP	GROUP LEADER	STRESS GROUP	LIAISON ENGRG	PROJ ENGRG	~~GOVT~~
APPROVED BY	JKS			—	DV	DV	JAP	[illegible]
DATE	12/21/67				12/14	12/14	12/21/67	12 15 67
12-14-67	VDI							

PRIORITY: C | DRAWING TITLE: NOTED | DRAWING NO.: LEO 280 | EO NO.: 816

ISSUED BY D. VALENZA/F.P. X86755 SECTION V.D.I. GROUP NO. 335 PL 25

01 /

NAS 9-1100

ENG 22.2 REV 3-65

GRUMMAN AIRCRAFT ENGINEERING CORP.
CODE IDENT NO. 26512
ENGINEERING ORDER

DWG. NO. LEO 280
EO NO. 843
CONTROL INFO NO. LM-5-17857

THIS LEO REVISES CHANGES LISTED ON LEO 280-816 FOR THE FOLLOWING DWGS.
TO THE FOLLOWING DRAWING'S REVISED NOTE *

* NOTE ANY TWO ADJACENT BOLTS MAY BE REMOVED, REINSTALLED AND TORQUED TO PRINT VALUES WITHOUT REPEATING THE TORQUE CYCLE ON REMAINING BOLT PATTERN.

WAS

ANY TWO ADJACENT BOLTS MAY BE REMOVED, REINSTALLED AND TORQUED TO PRINT VALUES WITHOUT REPEATING THE 72 HOURS TORQUE CYCLE.

DRAWING NO.	DRAWING TITLE	REVISED CHANGE NO.	REVISING CHANGE NO.	EFFECTIVITY
✓ LDW 280-52608 -3 & -5	LINE INSTALLATION PROP. & PRESSURIZATION SYSTEM D/S	D6	E1	LM-2 (32)
✓ LDW 280-53608 -3 & -5	LINE INSTALLATION PROP. & PRESSURIZATION SYSTEM D/S	E1	E3	LM-3 (33)
✓ LDW 280-54608 -1-3-5-19	LINE INSTALLATION PROP. & PRESSURIZATION SYSTEM D/S	D5	D9	LM-4 (34) THRU LM-15 (45)
✓ LDW 280-52350 -3	LINE INSTALLATION PROPELLANT FEED SYSTEM A/S	F2	F3	LM-2 (32)
LDW 280-53981 -1	LINE INSTALLATION PROPELLANT FEED SYSTEM A/S	B6	C1	LM-3 (33)
LDW 280-54981 -1	LINE INSTALLATION PROPELLANT FEED SYSTEM A/S	B3	C1	LM-4 (34) THRU LM-15 (45)

01

NAS 9-1100

RELEASED BY LIAISON

DETAIL SPEC REQ ☐	CL II ENGRG CHG ☑	CL I ENGRG CHG ☐		GAEC EO RELEASE ⑤

REASON FOR EO: REMOVAL TECHNIQUE & NOTE CLARIFICATION

DESCRIPTION OF EO: REF. (NOTED) CHG ON LEO 280-816 REVISED NOTE * WAS ANY TWO ADJACENT BOLTS MAY BE REMOVED, REINSTALLED AND TORQUED TO PRINT VALUES WITHOUT REPEATING THE 72 HOURS TORQUE CYCLE.

MODEL	PROCURING ACTIVITY NO.	GAEC UNIT NO.	SUB CONTR UNIT NO.
LM		NOTED ABOVE	

DRAWING CHANGE REQD		DISPOSITION OF PARTS	
REVISE DWG ✓	RECORD EO	REWORK ✓	SCRAP

APPROVED BY				—				
DATE	1/17/68				1-18-68	1-18-68	1/17/68	1/18/68
	VDI	SUPPORT	RELIAB. GROUP	GROUP LEADER	STRESS GROUP	LIAISON ENGRG	PROJ ENGRG	

PRIORITY: C
DRAWING TITLE: NOTED
DRAWING NO.: LEO 280
EO NO.: 843

ISSUED BY LIAISON J. McGILL / F.P. x86755 SECTION V.D.I. GROUP NO. 335 PL 25

GRUMMAN AIRCRAFT ENGINEERING CORP.
CODE IDENT NO. 26512
ENGINEERING ORDER

ENG 32.1 REV 3-65

DWG. NO. LDW 280-52350
EO NO. F4
CONTROL INFO NO. LDW 280B-6394

IN FIELD OF DWG REMOVE THE FOLLOWING % NOTES:

(ZONE 4A, SHEET 4)
"BOND LDW 280-11920 (REF) TO LDW 280-52984-3 USING EPON 934 PER LSP 14-22500 ROOM TEMP. CURE."

(ZONE 13B, SHEET 4)
"BOND LDW 280-11920 (REF) TO LDW 280-52984-1 USING EPON 934 PER LSP 14-22500 ROOM TEMP. CURE."

LFM

DETAIL SPEC REQ		CL II ENGRG CHG		CL I ENGRG CHG	✓	LCD# 3608 PKG #2 (5)

REASON FOR EO: REDESIGNED MOUNTING PROVISIONS FOR A/S ΔP ACCUMULATORS

DESCRIPTION OF EO: REMOVED THE FOLLOWING NOTES: "BOND LDW 280-11920 (REF) TO LDW 280-52983-1 USING EPON 934 PER LSP 14-22500 ROOM TEMP. CURE" AND "BOND LDW 280-11920 (REF) TO LDW 280-52983-3 USING EPON 934 PER LSP 14-22500 ROOM TEMP. CURE."

GAEC EO RELEASE: Ⓡ 12/4/68

MODEL	EFFECTIVITY ~~PROCURING ACTIVITY NO.~~	GAEC UNIT NO.	SUB CONTR UNIT NO.
LM	LFN# 301	LM-2 (32)	

DRAWING CHANGE REQD: REVISE DWG	RECORD EO	DISPOSITION OF PARTS: REWORK	SCRAP
✓		✓	

APPROVED BY		RLB			CW			
DATE	11/27/68	12/2/68		11/27/68	12/2/68		12/2/68	12-4-68
	VDI	~~SUPPORT~~ THERM	RELIAB. GROUP	GROUP LEADER	STRESS GROUP	LIAISON ENGRG	PROJ ENGRG	GOVT

PRIORITY	DRAWING TITLE	DRAWING NO.	EO NO.
C	LINES INSTALLATION - PROPELLANT FEED SYSTEM, ASCENT STAGE	LDW280-52350	F4

120268

ISSUED BY Geo. W. Rocklein x 86048 11/26/68 SECTION Veh. Des. Int. GROUP NO. 335 PL 25

01 NAS 9-1100

LDW280-52351 A

MODEL OR END ITEM	NEXT ASSY	MODULE OR SER NO.	REQD PER MODULE OR END ITEM
LEM	LDW280-52001	LEM-2 (32)	1
PART NO. LDW280-52351-1		GAEC SCH NO. 30—	

TO BE REDRAWN ON PRODUCTION FORMAT (5)

SH REV STATUS: FOR DESCRIPTION OF REV SEE SUBQ SH

SHEET	1.00	1.10	2.00	2.01			3.00		
REV	A	A	A	A			A		
SHEET	4.00		5.00						
REV	A		A						
SHEET									
REV									

LAST SECT LTR USED	B-B	GRUMMAN REL INFO. A	
		PRIM NO.	NK001
LAST DASH NO. USED	-1	450	MP-1A-12/28/

UNLESS OTHERWISE SPECIFIED DIMENSIONS ARE IN INCHES.
TOLERANCE UNLESS SPECIFIED
FRACTIONS - DECIMALS — ANGLES

ORIG DWG AUTH
DETAIL SPEC REQUIREMENT
CLASS II ENGRG CHANGE
CLASS I ENGRG CHANGE

CONTRACT NO. NAS 9-1100
LINE ITEM 091
DOCUMENTATION TYPE II

DRAWN BY	F. BREYER 8/29/66	WEIGHTS	L. Garcia 9/20/66
LAYOUT BY	J. DE VITA		
CHECKED BY			
GP. LDR	J. Woy 9/1/66		
V. D. I.	9/		
STRUCTURE	CW FEB for 9/12	PROJ ENGR	R.M. Brice 9-14
STRUCTURE	HILDERMAN 9/12	REL GROUP	Bot 9-22-66

(R)
GRUMMAN AIRCRAFT ENGRG CORP
BETHPAGE, L. I., NEW YORK

LINES INSTALLATION
HELIUM PRESSURIZATION SYSTEM

SIZE	CODE IDENT NO.		
B	26512	LDW280-52351	A (A)
SCALE NONE		SHEET 1 OF 7	

ENG 77.1 12-65

C.D.R. 10 SEPT. 1966.

01

NAS 9-1100

REVISIONS FOR CONTINUATION OF REVISIONS SEE SHEET ______

CHANGE LTR	ITEM NO.	SHEET NO.	ZONE	GRUMMAN INFO ONLY PRIOR TO EVENT	DET SPEC	CLASS I	CLASS II	ENGRG ORDER	DESCRIPTION	EFFECTIVITY	DISPOSITION OF EXISTING PARTS REWORK	DISPOSITION OF EXISTING PARTS SCRAP	CHANGED BY AND DATE	ENGRG APPD	GOVT APPD
		1.00							ADDED SH.1.10 LAST SECT LTR USED B-B WAS A-A. SH 1 OF 7 WAS SH 1 OF 6						
A	1	4.00 2.00 2.01	3C 7A					EO-A1	ON-1 INST ADDED LDW 280P16218-11(2), LDW280-16000-1343V-12 & -1342V-12, AN960D8L(4), MS21042L08(2), MS20470A2(12), GC12H-12(2), GB511J-08-1(2) & LSC269-200-12(2)	LM2(32)	✓		W. ROOS 12-21-67		
	2	3.00						LEO280-314	ADDED NOTE 9		NOT	REQD			
	3	5.00 3.00	13B 15B	3				EO-A3	ON-1 INSTL ADDED SEE NOTE 7 ADDED NOTE 7		✓				
	4	4.00 2.01 3.00	3C 7A	3				EO-A4 LCD 892	ON-1 INSTL-1733V-12 WAS -1343V-12, -1732V WAS -1342V-12, DELETED LSC269-200-12(2), ADDED LSC269-113-12(2) & NOTE 8						
	5	4.00 2.00	5A 9C	1			✓	EO-A5 LCD 1077	ON-1 INSTL LSC360-627-413(2) WAS LSC360-627-413 (REF)(2), ADDED LSC360-627-413(2) TEMP TRANSDUCER						
	6	4.00 2.00	5A 9C	6				EO-A6	REVISES EO-A5, ON-1 INSTL LSC360-605-413(2) WAS LDW360-627-413(2)		NOT	REQD			
	7	4.00 2.00	4B 8B	M				EO-A7 LCD 1031	ON-1 INST; REMOVED 732(REF), 459(REF)-460, -462, ADDED 1985(REF), 1988(REF), 1986 & 1987		✓				
	8	4.00 2.00 2.01	8B 7A	G				EO-A8 LCD 2169	ON-1 INSTL DELETED -1285ASH-6, ADDED -1726ASH-6, -4010ASH-6, LDW360-52264-3 INSTL, LSC269-258-1 & SECT B-B						
	9	3.00				✓		LEO280-769 LCD 1961	DELETE NOTE 5		NOT	REQD			

CHG APPROVED							
LTR	GROUP LDR	VDI			STRUCT	STRUCT	
A							

GRUMMAN AIRCRAFT ENGRG CORP., BETHPAGE, L. I., NEW YORK

SIZE	CODE IDENT NO.		
B	26512	LDW280-52351	A
SCALE NONE		SHEET 1.10	

ENG 77.16 3-66

01

NAS 9-1100

CL	QTY PER ASSEMBLY -1	CODE IDENT	PART NO.	I&T	NOMENCLATURE OR DESCRIPTION	MATERIAL	GOVT SPEC	COML SPEC	STOCK SIZE	PROCESS SYM	FINISH NO.	ZONE
L	2		LSC360-605-413	E	TEMP.TRANSDUCER	SEE DWG						
L	1		LSC360-52264-3	E	TRANSDUCER INSTL	SEE DWG						
K	2		LDW280P16218-11	E	PORT	SEE.DWG.						
			LDW280-16000									
L	1		-1732V-12	E	TUBE	SEE DWG.						
	1		-1733V-12									
	1		-1286ASH-8									
	1		-1285ASH-6									
	1		-1284ASH-6									
	1		-1034ASH-8									
	1		-1033ASH-8									
	1		-483ASH-8									
	1		-480ASH-8									
	1		-469ASH-8									
	1		-1986ASH-8									
	1		-461ASH-8									
	1		-1985ASH-8									
L	1		-452ASH-6	E	TUBE	SEE DWG						
			LDW280-16000									
			LDW280-52351-1	E	LINES INSTL							

CL = CLEANLINESS LEVEL

SYM OR NO.	PROCESS OR FINISH	GRUMMAN SPEC OR MILITARY SPEC	SYM OR NO.	PROCESS OR FINISH	GRUMMAN SPEC OR MILITARY SPEC	SYM OR NO.	PROCESS OR FINISH	GRUMMAN SPEC OR MILITARY SPEC

I & T: IDENTIFICATION AND TRACEABILITY IN ACCORDANCE WITH: NONE

GRUMMAN AIRCRAFT ENGRG CORP, BETHPAGE, L. I., NEW YORK

SIZE	CODE IDENT NO.		
B	26512	LDW280-52351	A

SCALE NONE

SHEET 2.00

ENG 77.2 7-65

01

NAS 9-1100

CL						-1	CODE IDENT	PART NO.	I&T	NOMENCLATURE OR DESCRIPTION	MATERIAL	GOVT SPEC	COML SPEC	STOCK SIZE	PROCESS SYM	FINISH NO.	ZONE
	QTY PER ASSEMBLY																
A						2		GC12H-12	E	CLAMP	GRM STD						
A						9		GC12H-8	E	CLAMP	GRM STD						
↑						6		GC12H-6	E	CLAMP	GRM STD						
						4		GB511J-08-3	E	BOLT	GRM STD						
						13		GB511J-08-1	E	BOLT	GRM. STD						
						12		MS20470-A2	E	RIVET	STD PART						
↓						17		MS21042L08	E	NUT	STD PART						
A						34		AN960D8L	E	WASHER	STD PART						
L						1		LSC 269-258-1	E	TEE	SEE NOTE*1						
L						2		LSC269-252-3	E	TEE	SEE NOTE*1						
↑						1		LSC269-234-9	E	TEE	↑						
						2		LSC269-228-6	E	TEE							
						4		LSC269-224-6	E	UNION							
↓						7		LSC269-200-8	E	UNION	↓						
L						2		LSC269204-8	E	TEE	SEE NOTE *1						
L						2		LSC 269-113-12	E	UNION	SEE NOTE*1						

SYM OR NO.	PROCESS OR FINISH	GRUMMAN SPEC OR MILITARY SPEC	SYM OR NO.	PROCESS OR FINISH	GRUMMAN SPEC OR MILITARY SPEC	SYM OR NO.	PROCESS OR FINISH	GRUMMAN SPEC OR MILITARY SPEC

I & T: IDENTIFICATION AND TRACEABILITY IN ACCORDANCE WITH : NONE

GRUMMAN AIRCRAFT ENGRG CORP, BETHPAGE, L. I., NEW YORK

SIZE B

CODE IDENT NO. 26512

LDW280-52351

A ①

SCALE NONE

SHEET 2.01

ENG 77.2 7-65

01

NAS 9-1100

NOTES:

1. COMMERCIAL PART: SEE SPECIFICATION CONTROL DRAWING BEFORE ORDERING.
2. INDUCTION BRAZE IN ACCORDANCE WITH LSP-14-6303 AND LSP-14-6304.
3. PROPELLANT FEED VALVES AND FITTINGS SHALL BE CLEANED TO LEVEL "L" OF LSP-14-0011. UPON INSTL OF COMPONENTS INTO A SUBSYSTEM. LEVEL "K" OF LSP-14-0011 SHALL BE MAINTAINED.
4. TUBE NUMBERS ARE DASH NUMBERS OF LDW280-16000
5. ~~BONDING TO BE INACCORDANCE WITH LSP390-001~~
6. TO BE REDRAWN ON PRODUCTION FORMAT AT A FUTURE DATE.
7. ANGULAR DEVIATION BETWEEN BRAZED FITTING, PRESSURIZATION TUBE OR TANK IS PERMISSIBLE, SO LONG AS JOINT INTEGRITY IS ACCEPTABLE BY PRESENT INSPECTION METHODS
8. ALL GAMAH JOINT CONNECTIONS SHALL BE IN ACCORDANCE WITH LSP-14-17402.
9. SUBSTITUTION OF NAS1132V*, AN525-832R*, OR AN525-832-* BOLTS FOR THE GB511J-08-* BOLT IS PERMISSIBLE

GRUMMAN AIRCRAFT ENGRG CORP., BETHPAGE, L. I., NEW YORK			
SIZE B	CODE IDENT NO. 26512	LDW280-52351	A Ⓐ
SCALE ~		SHEET 3.00	

ENG 73.1 6-64

01

NAS 9-1100

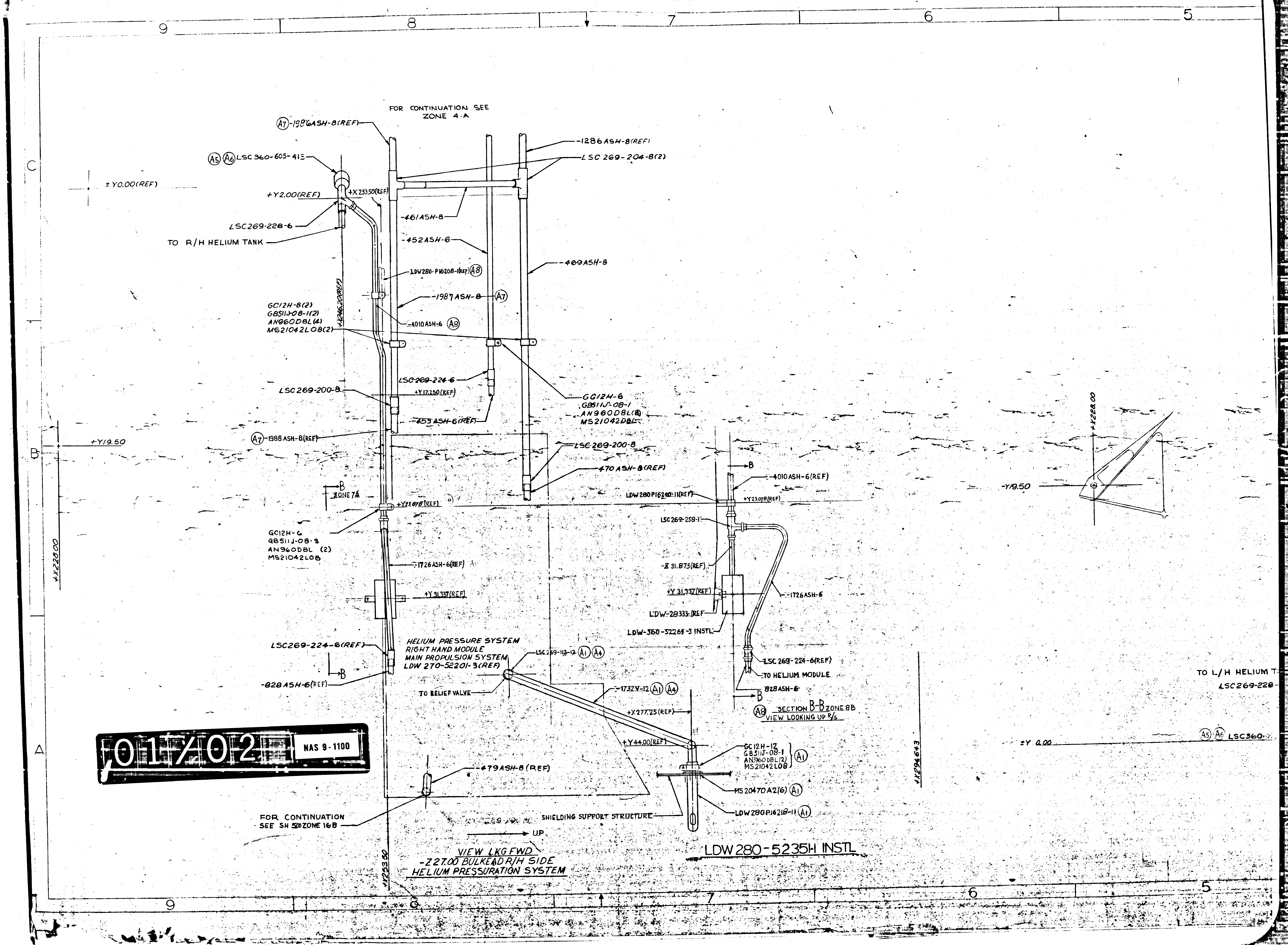
9
8
7
6
5
C
B
A
FOR CONTINUATION SEE ZONE 4-A
(A7) -1986ASH-8(REF)
-1286ASH-8(REF)
LSC 269-204-8(2)
(A5) (A6) LSC 360-605-413
±Y0.00(REF)
+Y2.00(REF)
+X253.50(REF)
-461ASH-8
LSC269-228-6
TO R/H HELIUM TANK
-452ASH-6
-469ASH-8
LDW280-P16208-1(REF) (A8)
-1987ASH-8 (A7)
+X246.20(REF)
GC12H-8(2)
GB511J-08-1(2)
AN960D8L(4)
MS21042L08(2)
-4010ASH-6 (A8)
LSC269-224-6
LSC269-200-8
+Y17.250(REF)
GC12H-6
GB511J-08-1
AN960D8L(2)
MS21042D8L
-453ASH-6(REF)
(A7) -1988ASH-8(REF)
+Y19.50
LSC269-200-8
-470ASH-8(REF)
B
ZONE 7A
+Y23.078(REF)
GC12H-6
GB511J-08-3
AN960D8L (2)
MS21042L08
+X228.00
-1726ASH-6(REF)
+Y31.337(REF)
LSC269-224-6(REF)
B
-828ASH-6(REF)
HELIUM PRESSURE SYSTEM
RIGHT HAND MODULE
MAIN PROPULSION SYSTEM
LDW 270-52201-3(REF)
LSC269-113-12 (A1) (A4)
TO RELIEF VALVE
-1732V-12 (A1) (A4)
+X277.25(REF)
+Y44.00(REF)
GC12H-12
GB511J-08-1
AN960D8L(2)
MS21042L08
(A1)
MS20470A2(6) (A1)
LDW280P16218-11 (A1)
-479ASH-8(REF)
FOR CONTINUATION
SEE SH 500 ZONE 16B
SHIELDING SUPPORT STRUCTURE
UP
+X253.50
VIEW LKG FWD
-Z27.00 BULKEAD R/H SIDE
HELIUM PRESSURATION SYSTEM
B
-4010ASH-6(REF)
LDW280P16240-11(REF)
+Y23.078(REF)
LSC269-258-T
-Z31.875(REF)
+Y31.337(REF)
LDW-28333-REF
LDW-360-52261-3 INSTL
-1726ASH-6
LSC269-224-6(REF)
TO HELIUM MODULE
828ASH-6
B
(A8) SECTION B-B ZONE 8B
VIEW LOOKING UP R/S
+X294.643
+X228.00
-Y19.50
TO L/H HELIUM T
LSC269-228
±Y 0.00
(A5) (A6) LSC360-

LDW280-5235H INSTL

01/02 NAS 9-1100

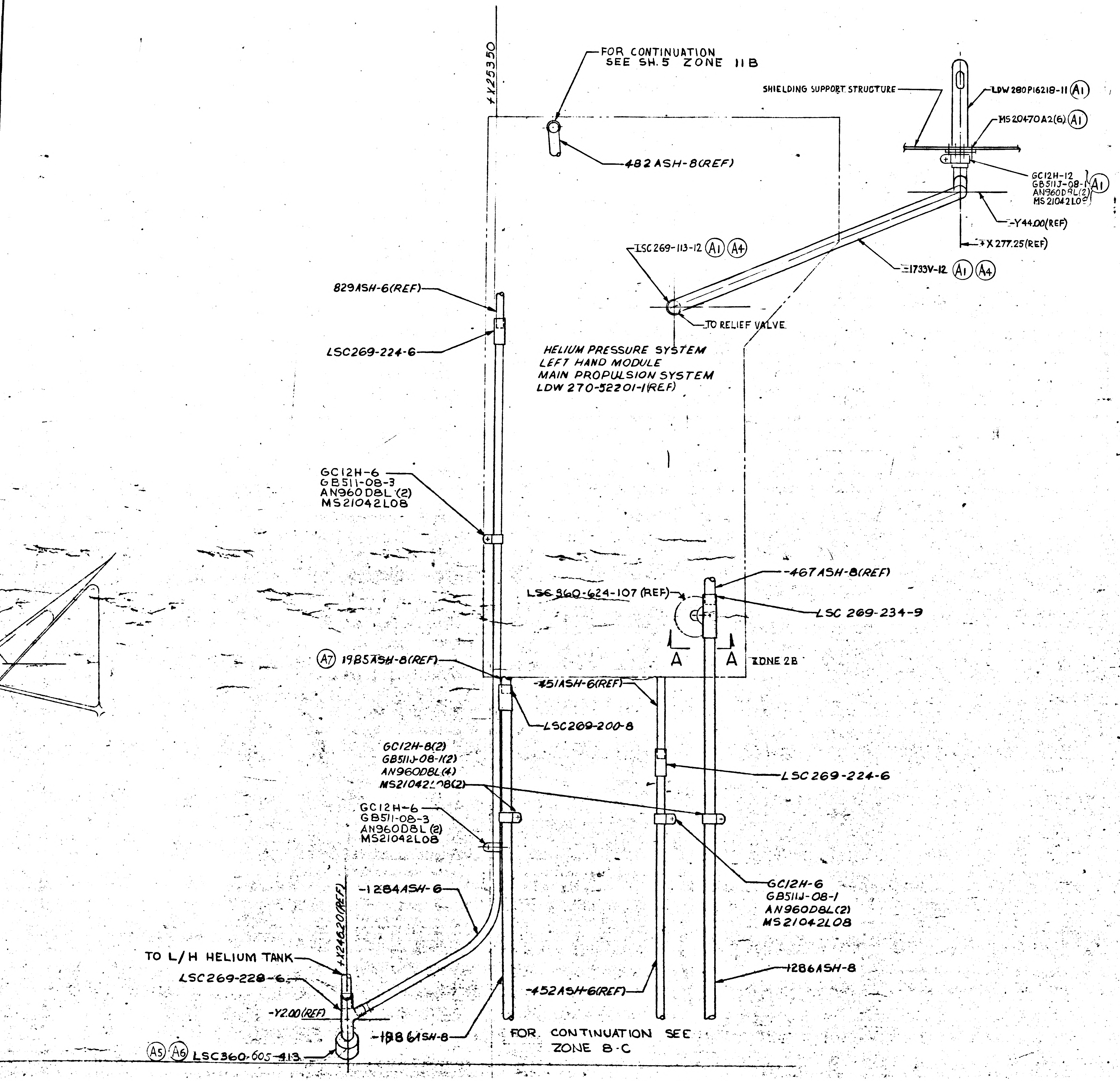
+X25350
FOR CONTINUATION SEE SH. 5 ZONE 11B
482 ASH-8(REF)
SHIELDING SUPPORT STRUCTURE
LDW 280P16218-11 (A1)
MS20470A2(6) (A1)
GC12H-12
GB511J-08-1
AN960D8L(2)
MS21042L08
(A1)
-Y44.00(REF)
+X 277.25(REF)
-1733V-12 (A1) (A4)
LSC269-113-12 (A1) (A4)
TO RELIEF VALVE
HELIUM PRESSURE SYSTEM
LEFT HAND MODULE
MAIN PROPULSION SYSTEM
LDW 270-52201-1(REF)
829ASH-6(REF)
LSC269-224-6
GC12H-6
GB511-08-3
AN960D8L (2)
MS21042L08
-467ASH-8(REF)
LSC 960-624-107 (REF)
LSC 269-234-9
A
A
ZONE 2B
(A7) 1985ASH-8(REF)
-451ASH-6(REF)
LSC269-200-8
GC12H-8(2)
GB511J-08-1(2)
AN960D8L(4)
MS21042L08(2)
LSC 269-224-6
GC12H-6
GB511-08-3
AN960D8L (2)
MS21042L08
GC12H-6
GB511J-08-1
AN960D8L(2)
MS21042L08
-1284ASH-6
+X246.20(REF)
TO L/H HELIUM TANK
LSC269-228-6
-Y2.00(REF)
-1886ASH-8
(A5) (A6) LSC360-605-413
-452ASH-6(REF)
1286ASH-8
FOR CONTINUATION SEE ZONE 8-C
UP
+X274.290

VIEW LKG FWD
-Z27.00 BULKHEAD L/H SIDE
HELIUM PRESSURIZATION SYSTEM

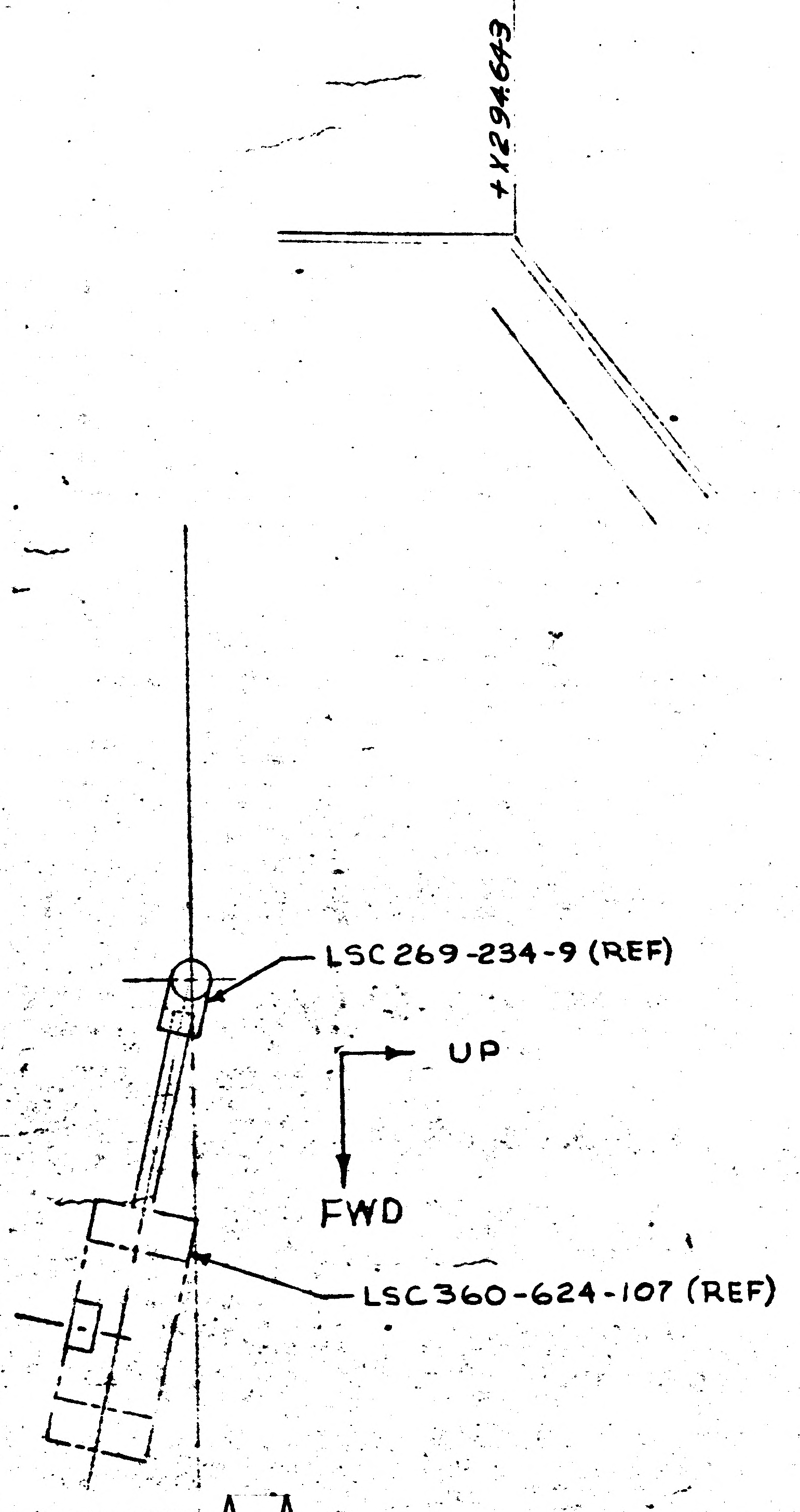
+X294.643
LSC 269-234-9 (REF)
UP
FWD
LSC 360-624-107 (REF)

SECTION A-A

ZONE B

MANUFACTURING OPERATIONS

UNLESS OTHERWISE SPECIFIED NOTES CHECKED √ APPLY TO THIS DWG.

PART NUMBER AND ALL OTHER MARKINGS IN REGION MARKED ⊠ USE BOTH SIDES IF NECESSARY.

FILLET AND INSIDE CORNER RADII TOLERANCES
.016R TO .062R ± .010
.063R TO .250R ± .015
OVER .250R ± .030

DEPTH SHOWN FOR TAPPED HOLES IS FULL THDS. 2-3 IMP THDS. BEYOND PERMISSIBLE.

EXTERNAL THREAD LENGTH SHOWN INCLUDES 2 IMPERFECT THREADS MAX.

DO NOT CADMIUM PLATE & PAINT HOLES OR SURFACES MARKED WITH DOUBLE ASTERISK.

MISMATCH STEP OF ± .005 PERMISSIBLE DUE TO CHANGE OF CUTTERS AT INSIDE INTERSECTING SURFACES.

DIAMETERS MARKED MUST BE CONCENTRIC WITHIN FULL INDICATOR READING

HOLES MUST BE KEPT FREE OF CHROME PLATING SOLUTION.

ALL DIMENSIONS SHOWN TO BE MET AFTER CADMIUM PLATING. THICKNESS OF PLATE .0003 MIN. TO .0005 MAX. MIN. THICKNESS TO BE .0002 ON THREADED AREAS. NO ALLOWANCE FOR PLATING IN HOLES

125 √ SURFACE ROUGHNESS INCLUDING REAMED HOLES PER MIL-STD-10

200 √ FOR ALL DRILLED HOLES

REMOVE ALL BURRS. BREAK ALL EDGES .015-.031

INSPECTION INFORMATION MINIMUM PERMISSIBLE AVERAGE EDGE DISTANCE MARKED IS

SYMBOL √ DENOTES SURFACE TO BE MACHINED

UNLESS OTHERWISE SPECIFIED TOLERANCE ON FLANGES IS ± 1/32

LENGTHS OF AN, NAS & MS AL ALY RIVETS SHORTER THAN 1 INCH ARE NOT SPECIFIED.

TOLERANCE ON LOFTED DELINEATIONS IS

DWG SIZE 34 X 90

PRINTING INFO ONLY
FULL SIZE SHEET AREA (36 X 107)= 33 SQ. FT.
1/2 SIZE SHEET AREA (1/4 OF FULL)= 8.3 SQ. FT.

PRINT TRIM LINE

LDW280-52351A

LDW280-52351A

02/02

NAS 9-1100

GRUMMAN AIRCRAFT ENGRG CORP., BETHPAGE, L. I., NEW YORK

LEM-2(32)	SIZE J	CODE IDENT NO. 26512	LDW280-52351	A
MODEL OR END ITEM	SCALE HALF		SHEET 4.00	

2 FR

THIS IS AN ORIGINAL DWG

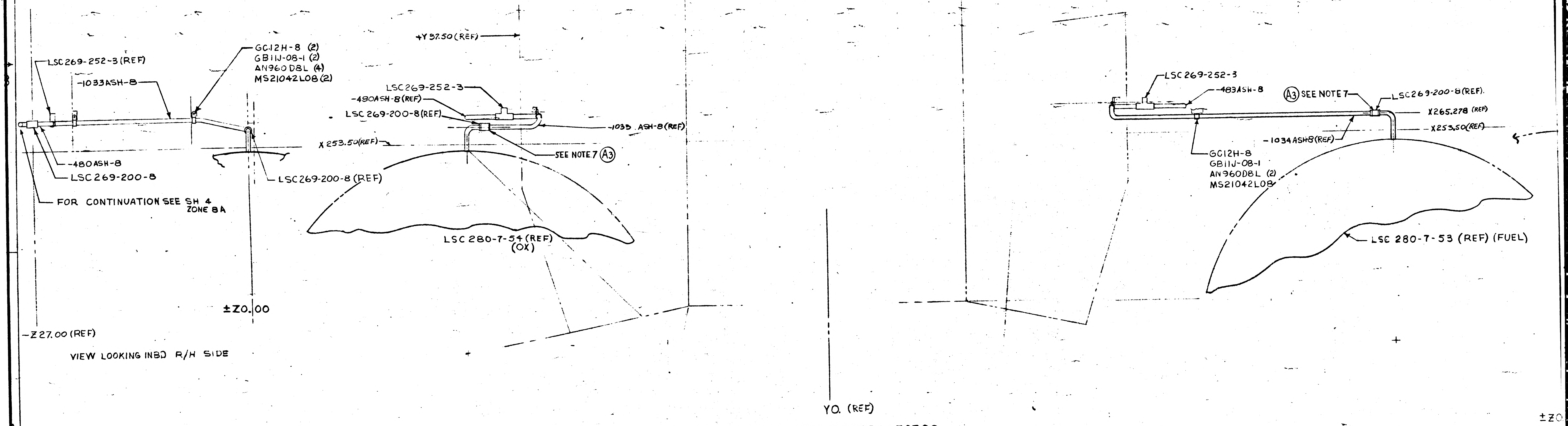
LSC269-252-3 (REF)
-1033ASH-8
GC12H-8 (2)
GB11J-08-1 (2)
AN960D8L (4)
MS21042L08 (2)
-480ASH-8
LSC269-200-8
FOR CONTINUATION SEE SH 4 ZONE 8A
LSC269-200-8 (REF)
±Z0.00
-Z27.00 (REF)
+Y37.50 (REF)
LSC269-252-3
-480ASH-8 (REF)
LSC269-200-8 (REF)
-1035 ASH-8 (REF)
X253.50 (REF)
SEE NOTE 7 (A3)
LSC280-7-54 (REF) (OX)
LSC269-252-3
-483ASH-8
(A3) SEE NOTE 7
LSC269-200-8 (REF).
X265.278 (REF)
X253.50 (REF)
-1034ASH8 (REF)
GC12H-8
GB11J-08-1
AN960D8L (2)
MS21042L08
LSC280-7-53 (REF) (FUEL)
YO. (REF)
±ZO

VIEW LOOKING INBD R/H SIDE

VIEW LOOKING AFT FROM +Z27.00

HELIUM PRESSURIZATION SYSTEM
EXT. MID SECTION

LDW280-52351-1 INSTL

01/02 NAS 9-1100

MANUFACTURING OPERATIONS UNLESS OTHERWISE SPECIFIED NOTES CHECKED ✓ APPLY TO THIS DWG.	
PART NUMBER AND ALL OTHER MARKINGS IN REGION MARKED ☒ USE BOTH SIDES IF NECESSARY.	
FILLET AND INSIDE CORNER RADII TOLERANCES .016R TO .062R ± .010 .063R TO .250R ± .015 OVER .250R ± .030	
DEPTH SHOWN FOR TAPPED HOLES IS FULL THDS. 2-3 IMP THDS. BEYOND PERMISSIBLE.	
EXTERNAL THREAD LENGTH SHOWN INCLUDES 2 IMPERFECT THREADS MAX.	
DO NOT CADMIUM PLATE & PAINT HOLES OR SURFACES MARKED WITH DOUBLE ASTERISK.	
MISMATCH STEP OF ± .005 PERMISSIBLE DUE TO CHANGE OF CUTTERS AT INSIDE INTERSECTING SURFACES.	
DIAMETERS MARKED MUST BE CONCENTRIC WITHIN FULL INDICATOR READING	
HOLES MUST BE KEPT FREE OF CHROME PLATING SOLUTION.	
ALL DIMENSIONS SHOWN TO BE MET AFTER CADMIUM PLATING. THICKNESS OF PLATE .0003 MIN. TO .0005 MAX. MIN. THICKNESS TO BE .0002 ON THREADED AREAS. NO ALLOWANCE FOR PLATING IN HOLES	
125 SURFACE ROUGHNESS INCLUDING REAMED HOLES PER MIL-STD-10	
200 FOR ALL DRILLED HOLES	
REMOVE ALL BURRS. BREAK ALL EDGES .015-.031	
INSPECTION INFORMATION MINIMUM PERMISSIBLE AVERAGE EDGE DISTANCE MARKED IS	
SYMBOL ƒ DENOTES SURFACE TO BE MACHINED	
UNLESS OTHERWISE SPECIFIED TOLERANCE ON FLANGES IS ± 1/32	
LENGTHS OF AN, NAS & MS AL ALY RIVETS SHORTER THAN 1 INCH ARE NOT SPECIFIED.	
TOLERANCE ON LOFTED DELINEATIONS IS	

DWG SIZE 34 X 70

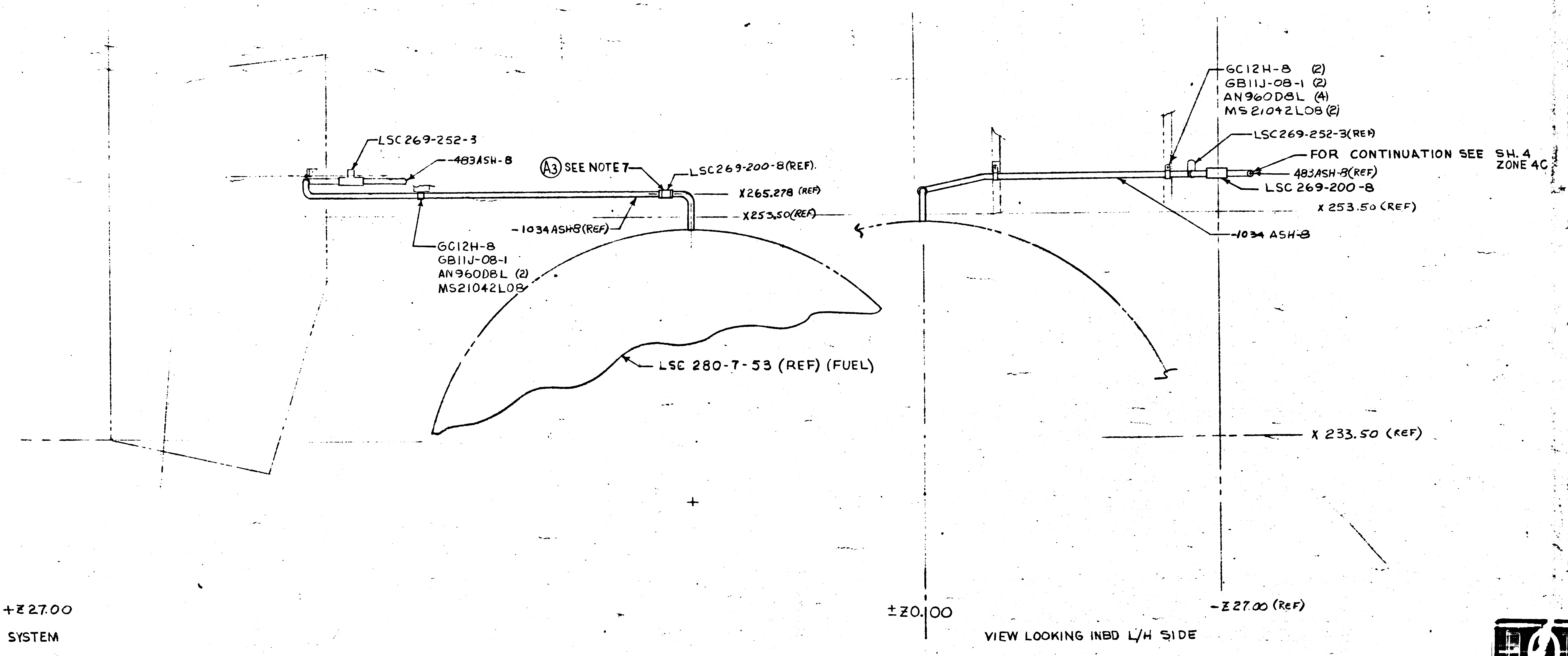
LSC269-252-3
483ASH-8
A3 SEE NOTE 7
LSC269-200-8(REF).
X265.278 (REF)
X253.50(REF)
-1034ASH8(REF)
GC12H-8
GB11J-08-1
AN960D8L (2)
MS21042L08
LSC 280-7-53 (REF) (FUEL)
GC12H-8 (2)
GB11J-08-1 (2)
AN960D8L (4)
MS21042L08 (2)
LSC269-252-3(REF)
FOR CONTINUATION SEE SH. 4 ZONE 4C
483ASH-8(REF)
LSC 269-200-8
X 253.50 (REF)
-1034 ASH-8
X 233.50 (REF)
±Z0.100
-Z27.00 (REF)

VIEW LOOKING INBD L/H SIDE

L (REF)

T FROM +Z 27.00

RIZATION SYSTEM
ECTION

51-1 INSTL

02/02

NAS 9-1100

LDW280-52351A

LEM-2(32)	GRUMMAN AIRCRAFT ENGRG CORP., BETHPAGE, L. I., NEW YORK			
MODEL OR END ITEM	SIZE J	CODE IDENT NO. 26512	LDW280-52351	A
	SCALE Quarter		SHEET 5 00	

THIS IS AN ORIGINAL DWG

01

ENG 32.2 REV 3-65

GRUMMAN AIRCRAFT ENGINEERING CORP.
CODE IDENT NO. 26512
ENGINEERING ORDER

DWG. NO. LDW280-52351 | EO NO. A1
CONTROL INFO NO. LDW280A-0565

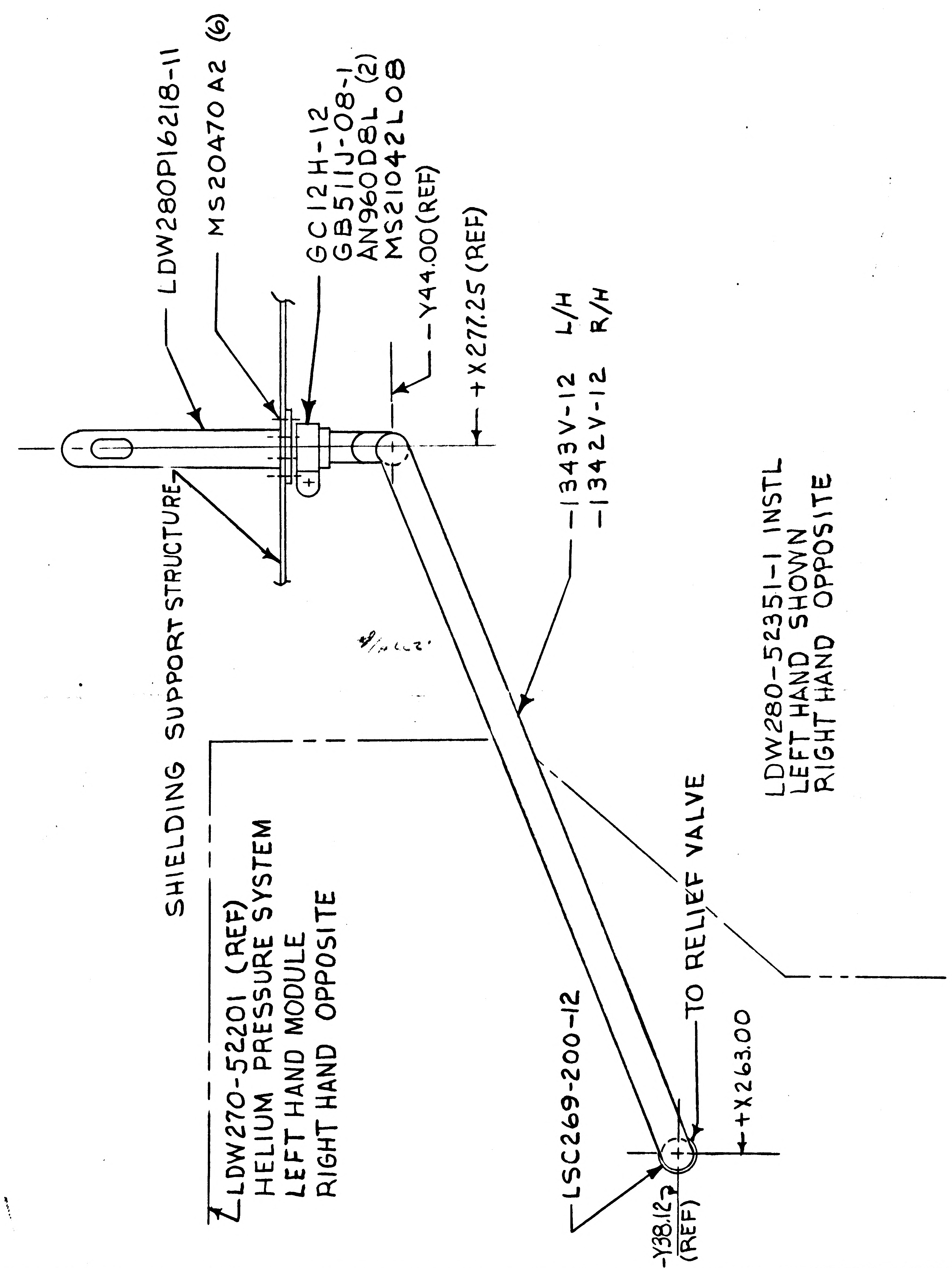

LDW280P16218-11
MS20470 A2 (6)
GC12H-12
GB511J-08-1
AN960D8L (2)
MS21042L08
-Y44.00 (REF)
+X277.25 (REF)
-1343V-12 L/H
-1342V-12 R/H
LDW280-52351-1 INSTL
LEFT HAND SHOWN
RIGHT HAND OPPOSITE
SHIELDING SUPPORT STRUCTURE
LDW270-52201 (REF)
HELIUM PRESSURE SYSTEM
LEFT HAND MODULE
RIGHT HAND OPPOSITE
TO RELIEF VALVE
LSC269-200-12
+X263.00
-Y38.12 (REF)

DETAIL SPEC REQ		CL II ENGRG CHG		CL I ENGRG CHG	

REASON FOR EO: ADDED HELIUM PRESSURATION VENT SYSTEM

DESCRIPTION OF EO: ADDED- TO -1 INSTL - LDW280P16218-11 (2) LDW280-16000-1343V-12 & 1342V-12 AN960D8L (4) MS21042L08 (2) MS20470A2 (12) GC12H-12 (2) GB511J-08-1 (2) & LSC 269-200-12 (2)

GAEC EO RELEASE: 5 10/4

MODEL	PROCURING ACTIVITY NO.	GAEC UNIT NO.	SUB CONTR UNIT NO.
LM		LM-2 (32)	

DRAWING CHANGE REQD: REVISE DWG	RECORD EO	DISPOSITION OF PARTS: REWORK	SCRAP
✓		✓	

APPROVED BY	JW	—	—	—	J			
DATE	9/20/66				9/23		10-1-66	10/1/66
9/20/66	VDI	SUPPORT	RELIAB. GROUP	GROUP LEADER	STRESS GROUP	LIAISON ENGRG	PROJ ENGRG	~~GOVT~~

PRIORITY: C
DRAWING TITLE: LINES INSTL HELIUM PRESSURIZATION SYSTEM
DRAWING NO. LDW280-52351
EO NO. A1

ISSUED BY F BREYER X6566 SECTION EQUIP LINES (VDI) GROUP NO. 332 PL 35

NAS 9-1100

GRUMMAN AIRCRAFT ENGINEERING CORP.
CODE IDENT NO. 26512
ENGINEERING ORDER

ENG 32.1 REV 3-65

DWG. NO. LEO 280-
EO NO. 314
CONTROL INFO NO. LDW280-A2087

ON SH 3 OF THE FOLLOWING DWGS

DWG No.	CHG NO	DWG No.	CHG NO	DWG NO	CHG NO
LDW280-52350	A2	LDW280-52354	A4	LDW280-52358	A1
52351	A2	-52355	A2	-52359	A3
52352	A1	-52356	A1	LDW 280-52360	A2
LDW 280-52353	A1	LDW280 -52357	B2		

ADD THE FOLLOWING NOTE

ǂ SUBSTITUTION OF NAS1132V*, AN525-832R* OR AN525-832-* BOLTS FOR THE GB511J-08-* BOLT IS PERMISSIBLE

* USE NEXT AVAILABLE NUMBER.

THIS IS A RE-ISSUE OF LEO 280-314 ~ INCOMPLETE CHANGE No'S ON ORIG ISSUE

(5)

DETAIL SPEC REQ ☐ CL II ENGRG CHG ☐ CL I ENGRG CHG ☐

REASON FOR EO: HARDWARE NOT AVAILABLE

DESCRIPTION OF EO: ON SH 3 ADDED NOTE ǂ(ǂ)

GAEC EO RELEASE: 10/17

MODEL	PROCURING ACTIVITY NO.	GAEC UNIT NO.	SUB CONTR UNIT NO.
LM		LM-2 (32)	

DRAWING CHANGE REQD: ✓ REVISE DWG; RECORD EO

DISPOSITION OF PARTS: NOT REWORK; REQD SCRAP

APPROVED BY ✓ DATE							
JW	—	—	—	FW			
10-11-66				10-12		10-12-66	10/15/66
VDI	SUPPORT	RELIAB. GROUP	GROUP LEADER	STRESS GROUP	LIAISON ENGRG	PROJ ENGRG	

PRIORITY: C

DRAWING TITLE: LINES INSTALLATIONS

DRAWING NO: LEO-280-

EO NO. 314

ISSUED BY C.H. COHEN X7033

SECTION EQUIP LINES (VDI) GROUP NO. 332 PL 35

01

NAS 9-1100

ENG 32.1 REV 3-65

GRUMMAN AIRCRAFT ENGINEERING CORP.
CODE IDENT NO. 26512
ENGINEERING ORDER

DWG. NO. LDW280-52351
EO NO. A3
CONTROL INFO NO. LM-5-11380

TO -1 INSTL. SH 3.00 ADD

NOTE ✱. ANGULAR DEVIATION BETWEEN BRAZED FITTING, PRESSURIZATION TUBE OR TANK FITTING IS PERMISSABLE. SO LONG AS JOINT INTEGRITY IS ACCEPTABLE BY PRESENT INSPECTION METHODS.

ON SH 5 ZONES 13-B & 15-B ADD: SEE NOTE ✱

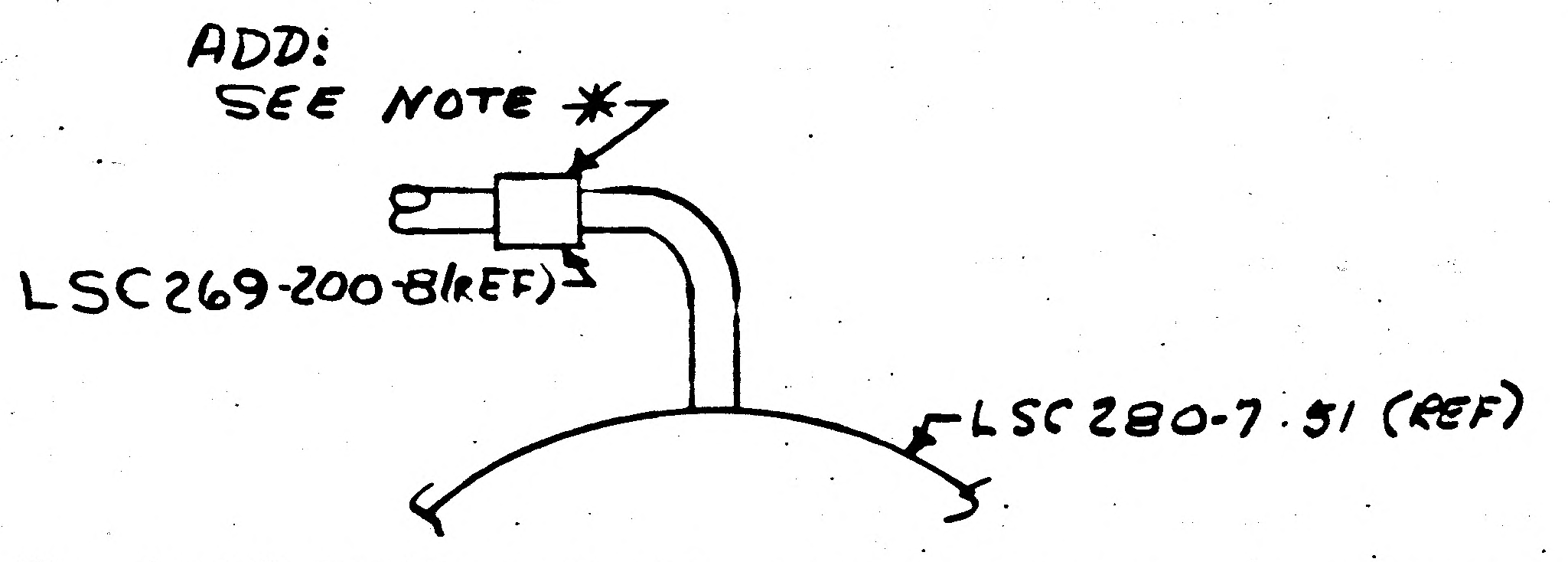

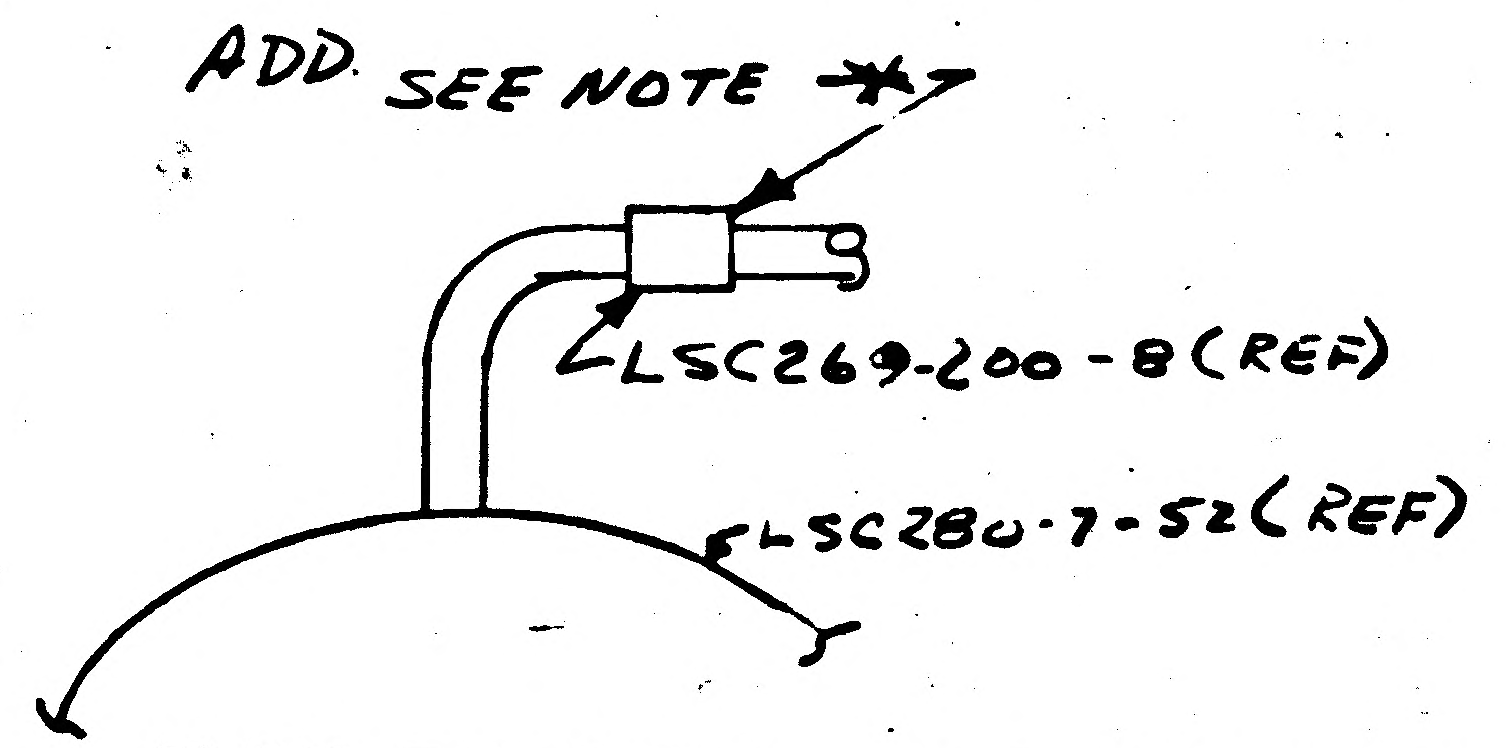

✱ USE THE NEXT AVAILABLE NUMBER

RELEASED BY LIAISON
(5)

DETAIL SPEC REQ		CL II ENGRG CHG		CL I ENGRG CHG	

REASON FOR EO: TO FACILITATE INSTL. OF PROPELLANT TANKS (DR#8-6)

DESCRIPTION OF EO:
ON -1 INSTL.
ON SH 3.00 ADDED: NOTE ✱
ON SH 5.00 ZONES 13B & 15B ADDED SEE NOTE ✱.

GAEC C EO RELEASE: CE

MODEL	EFFECTIVITY: PROCURING ACTIVITY NO.	GAEC UNIT NO.	SUB CONTR UNIT NO.
LM		LM-2 (32)	

DRAWING CHANGE REQD: REVISE DWG	RECORD EO	DISPOSITION OF PARTS: REWORK	SCRAP
✓		✓	

		SUPPORT	RELIAB. GROUP	GROUP LEADER	STRESS GROUP	LIAISON ENGRG	PROJ ENGRG	
APPROVED BY	JW CHL	—	—	—		JFJ	RMC (EW)	
DATE	12/12/66					12-12-66	12-15-66	12/12/66
3	VD1							

PRIORITY: C
DRAWING TITLE: LINES INSTALLATION HELIUM PRESSURIZATION SYSTEM
DRAWING NO. LDW280-52351
EO NO. A3

ISSUED BY F. BREVER X 7033
SECTION EQUIP LINES
GROUP NO. 332
PL 35

B

ENG 32 2 REV 3 65

CODE IDENT NO

ENGINEERING ORDER

*

A4

CONTROL INFO NO LDW280A 5240

* ALL GAMA [illegible]

* [illegible]

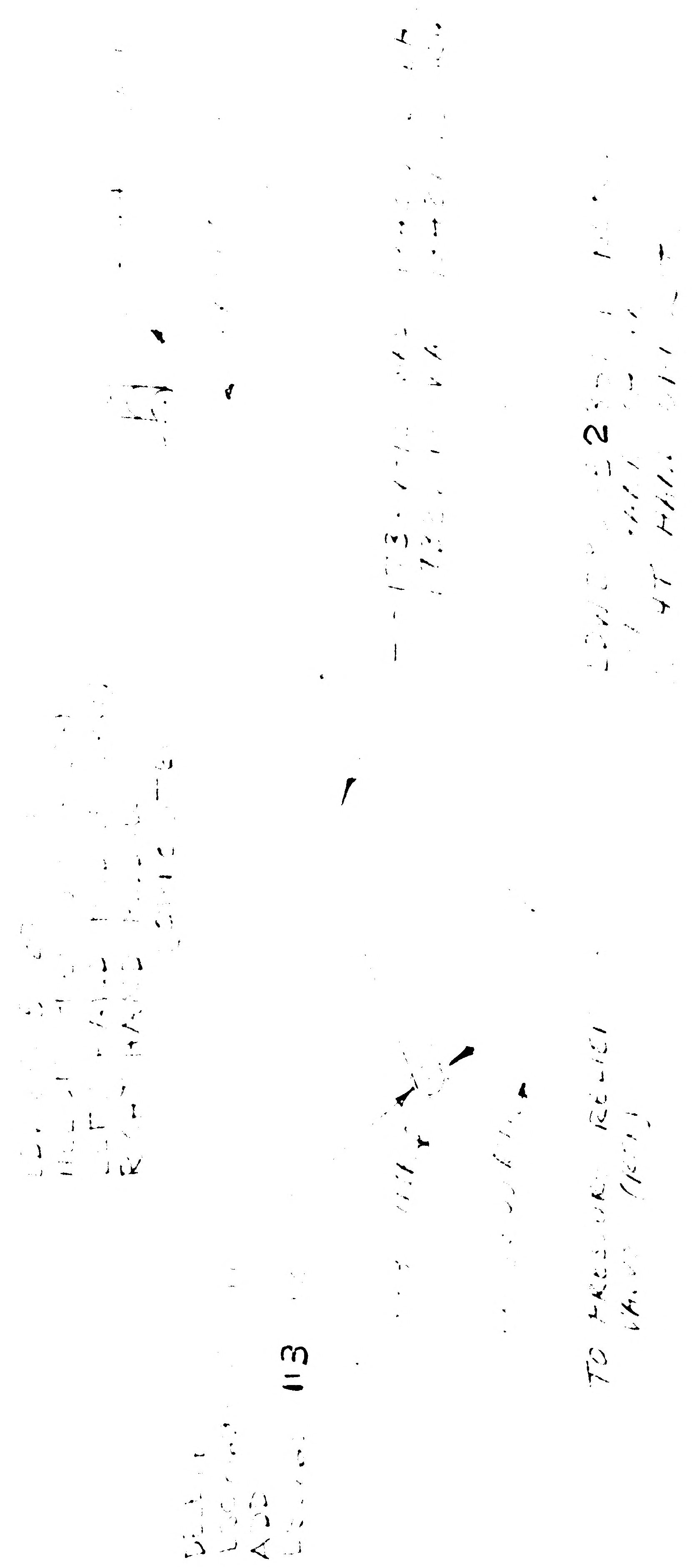

(5)

DETAIL SPEC REQ		CL II ENGRG CHG		CL I ENGRG CHG		LCR 892							
REASON FOR EO				DESCRIPTION OF EO									GAEC EO RELEASE
TO FACILITATE REMOVAL OF PRESSURE RELIEF VALVE				DN - , INSTL -1733V [illegible] -1242V-12 -1733V [illegible] -1242V-12 DELETED LSC229-210-12 (2) ADDED LSC229 113-12(2) & NOTE *									2/2/7
MODEL	EFFECTIVITY			DRAWING CHANGE REQD		DISPOSITION OF PARTS		APPROVED BY			JW/CHC	CW	
	PROCURING ACTIVITY NO	GAEC UNIT NO	SUB CONTR UNIT NO					DATE 1/25/67			1-24-67	1-30-67	1/24/67 2-1-67
LM		LM-2 (32)		✓ REVISE DWG	RECORD EO	✓ REWORK	SCRAP	3	VD1 SUPPORT	RELIAB. GROUP	GROUP LEADER	STRESS GROUP	LIAISON ENGRG / PROJ ENGRG / GOVT
				PRIORITY	DRAWING TITLE						DRAWING NO		EO NO
				C	LINES INSTL HELIUM PRESSURIZATION SYSTEM						LDW280-52351		A4

ISSUED BY [illegible] SECTION [illegible] GROUP NO. [illegible] PL 35

01

NAS 9-1100

B

ENG 32.1 REV 3-65

GRUMMAN AIRCRAFT ENGINEERING CORP.
CODE IDENT NO. 26512
ENGINEERING ORDER

DWG. NO. LDW280-52351
EO NO. A5
CONTROL INFO NO. LDW280A5575

ON -1 INSTL

IN F/D LSC360-627-413 (2) WAS LSC360-627-413 (REF) (2)

IN B/M ADD LSC360-627-413 (2) TEMP TRANSDUCER

5

DETAIL SPEC REQ		CL II ENGRG CHG	✓	CL I ENGRG CHG	LCR-19-1077

REASON FOR EO: INSTRUMENTATION DRAWING WAS NEVER CREATED TO INSTALL TRANSDUCER

DESCRIPTION OF EO:
ON-1 INSTL
IN F/D LSC360-627-413(2) WAS LSC360-627-413(REF)(2)
IN B/M ADDED LSC360-627-413(2) TEMP TRANSDUCER

GAEC EO RELEASE: 3/18/67

MODEL	EFFECTIVITY: PROCURING ACTIVITY NO.	GAEC UNIT NO.	SUB CONTR UNIT NO.
LM		LM-2(32)	

DRAWING CHANGE REQD: REVISE DWG ✓ RECORD EO
DISPOSITION OF PARTS: REWORK ✓ SCRAP

APPROVED BY				JW	GW		
DATE	2/16/67			2/16/67	2-20	3-11-67	3/16/67
1	VD1	SUPPORT	RELIAB. GROUP	GROUP LEADER	STRESS GROUP	LIAISON ENGRG	PROJ ENGRG

PRIORITY: C
DRAWING TITLE: LINES INSTALLATION HELIUM PRESSURIZATION SYSTEM
DRAWING NO. LDW280-52351
EO NO. A5

2-17-67
ISSUED BY J. DeVITA X7033
SECTION EQUIP LINES (VD1)
GROUP NO. 332
PL 35

01

NAS 9-1100

b ✱

ENG 32.1 REV 3-65

GRUMMAN AIRCRAFT ENGINEERING CORP.
CODE IDENT NO. 26512
ENGINEERING ORDER

DWG. NO. LDW280-52351		EO NO. A6
CONTROL INFO NO. LDW280A6260		

THIS EO REVISES EO A5

ON -1 INSTL IN F/D & B/M
LSC360-605-413(2) WAS LDW360-627-413(2)

DETAIL SPEC REQ	☐	CL II ENGRG CHG	☑	CL I ENGRG CHG	☐

5

REASON FOR EO: TO MATCH LEVEL III SCHEMATIC

DESCRIPTION OF EO: REVISED EO A5 ON -1 INSTL IN F/D & B/M LSC 360-605-413(2) WAS LDW360-627-413(2)

Ⓟ GAEC C EO RELEASE: JK 4/11/7

MODEL	EFFECTIVITY: PROCURING ACTIVITY NO.	GAEC UNIT NO.	SUB CONTR UNIT NO.
LM		LM-2(32)	

DRAWING CHANGE REQD: REVISE DWG	RECORD EO	DISPOSITION OF PARTS: REWORK	SCRAP	APPROVED BY / DATE					GROUP LEADER	STRESS GROUP	LIAISON ENGRG	PROJ ENGRG	~~GOVT~~
✓		NOT	REQD	DATE	4/4/67				4/4/67			Dam 4/7/67	4-11-67
				6	VDI	SUPPORT	RELIAB. GROUP						

PRIORITY: C
DRAWING TITLE: LINES INSTALLATION HELIUM PRESSURIZATION SYSTEM
DRAWING NO.: LDW280-52351
EO NO.: A6

ISSUED BY: 4-4-67 J. DE VITA X1153
SECTION: EQUIP LINES (VDI)
GROUP NO. 332
PL 25

01
NAS 9-1100

ENG 32.1 REV 3-65

GRUMMAN AIRCRAFT ENGINEERING CORP.
CODE IDENT NO. 26512
ENGINEERING ORDER

DWG. NO. LDW280-52351
EO NO. A7
CONTROL INFO NO. LDW280A 9432

ON LDW 280-52351-1 INSTALL. REMOVE LDW 280-16000-732ASH-8 (REF) & ADD LDW 280-16000-1985ASH-8(REF). REMOVE LDW 280-16000-459ASH-8 (REF) & ADD LDW 280-16000-1988ASH-8 (REF).
REMOVE LDW 280-16000-462ASH-8 & ADD LDW 280-16000-1986ASH-8.
REMOVE LDW 280-16000-460ASH-8 & ADD LDW 280-16000-1987ASH-8.

DESCRIPTION OF EO (CONTD)
LDW 280-16000-1985ASH-8 (REF). REMOVED LDW280-16000-459ASH-8 (REF) & ADDED LDW 280-16000-1988ASH-8 (REF).
REMOVED LDW280-16000-462ASH-8 & ADDED LDW280-16000-1986ASH-8.
REMOVED LDW280-16000-460ASH-8 & ADDED LDW 280-16000-1987 ASH-8.

DETAIL SPEC REQ ☐ CL II ENGRG CHG ✓ CL I ENGRG CHG ☐ LCD 1031

GAEC EO RELEASE: JK 10/3/67

REASON FOR EO: TO INSTALL FAIRCHILD-HILLER REGULATOR

DESCRIPTION OF EO: ON LDW280-52351-1 INSTALL REMOVED LDW280-16000-732ASH-8 (REF) & ADDED (CONTD)

MODEL	PROCURING ACTIVITY NO.	GAEC UNIT NO.	SUB CONTR UNIT NO.
LM		LM2 (32)	

DRAWING CHANGE REQD: REVISE DWG ✓ RECORD EO ☐

DISPOSITION OF PARTS: REWORK ✓ SCRAP ☐

APPROVED BY	Perotti							
DATE	9/26/67	9/27			9.29		9/27	10 3 67
M	PROP	VDI	RELIAB. GROUP	GROUP LEADER	STRESS GROUP	LIAISON ENGRG	PROJ ENGRG	CONT

PRIORITY: C

DRAWING TITLE: LINES INSTALLATION-HELIUM PRESSURIZATION SYSTEM

DRAWING NO. LDW280-52351

EO NO. A7

ISSUED BY A.HENDRICKS 9-26-67 X1471 10/6

SECTION PROPULSION

GROUP NO. 270

PL 25

01

NAS 9-1100

GRUMMAN AIRCRAFT ENGINEERING CORP.
CODE IDENT NO. 26512
ENGINEERING ORDER

EOD 38.2 REV 3-66

DWG. NO. LDW280-52351 EO NO. A8
CONTROL INFO NO. LDW280A9895

TUBE NUMBERS ARE DASH NUMBERS OF LDW280-16000 IN F/D & DESCRIPTION OF E.O.

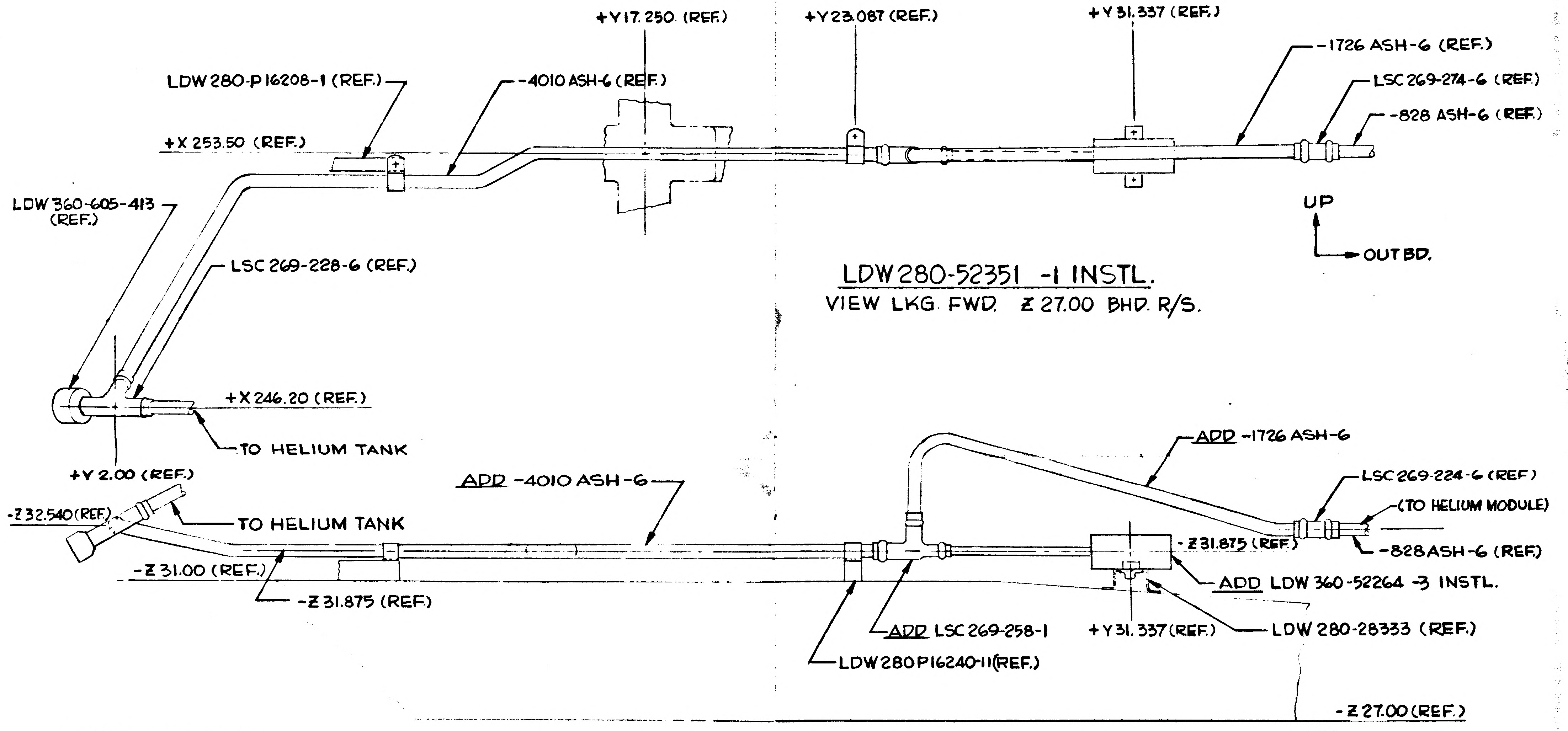
+Y17.250 (REF.)
+Y23.087 (REF.)
+Y31.337 (REF.)
-1726 ASH-6 (REF.)
LDW280-P16208-1 (REF.)
-4010 ASH-6 (REF.)
LSC269-274-6 (REF.)
-828 ASH-6 (REF.)
+X253.50 (REF.)
LDW360-605-413 (REF.)
LSC269-228-6 (REF.)
UP
OUTBD.
+X246.20 (REF.)
TO HELIUM TANK
+Y 2.00 (REF.)
ADD -4010 ASH-6
ADD -1726 ASH-6
LSC269-224-6 (REF.)
(TO HELIUM MODULE)
-Z32.540 (REF.)
TO HELIUM TANK
-Z31.875 (REF.)
-828 ASH-6 (REF.)
ADD LDW360-52264-3 INSTL.
-Z31.00 (REF.)
-Z31.875 (REF.)
ADD LSC269-258-1
+Y31.337 (REF.)
LDW280-28333 (REF.)
LDW280P16240-11 (REF.)
-Z27.00 (REF.)
AFT
OUTB'D.

LDW280-52351 -1 INSTL.
VIEW LKG FWD. Z 27.00 BHD. R/S.

VIEW LKG UP R/S.

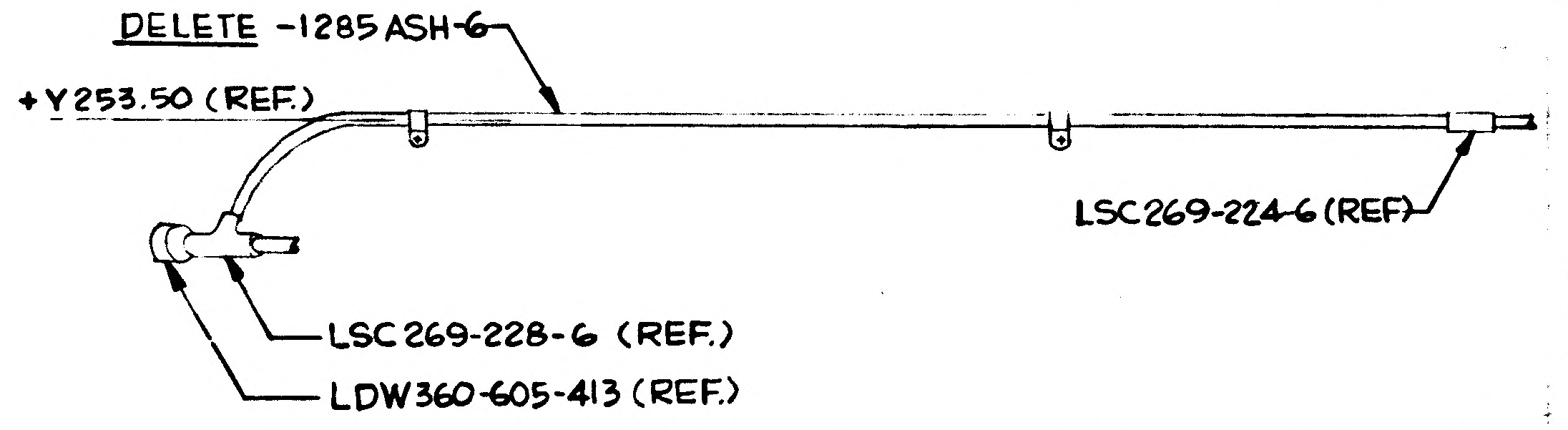
DELETE -1285 ASH-6
+Y253.50 (REF.)
LSC269-224-6 (REF)
LSC269-228-6 (REF.)
LDW360-605-413 (REF.)

VIEW LKG FWD. Z27.00 BHD. R/S.

WAS

DETAIL SPEC REQ	☐	CL II ENGRG CHG	☑	CL I ENGRG CHG	☐	LCD 2169

REASON FOR EO	DESCRIPTION OF EO	GAEC EO RELEASE
RELOCATION OF PRESSURE TRANSDUCER TO FACILITATE REPLACEMENT INSTL	ON -1 INSTL; DELETED: -1285 ASH-6, ADDED: -1726 ASH-6 -4010 ASH-6, LDW360-52264-3 INSTL, & LSC269-258-1.	5

MODEL	PROCURING ACTIVITY NO.	GAEC UNIT NO.	SUB CONTR UNIT NO.	DRAWING CHANGE REQD		DISPOSITION OF PARTS		APPROVED BY / DATE		SUPPORT	RELIAB. GROUP	GROUP LEADER	STRESS GROUP	LIAISON ENGRG	PROJ ENGRG	
				✓ REVISE DWG	RECORD EO	✓ REWORK	SCRAP		10/19/67			10-9-67	10/11/67		10/19/67	10-20-67
LM		LM-2 (32)						G	VD1							

PRIORITY C
DRAWING TITLE: LINES INSTL - HELIUM PRESSURAZATION SYSTEM
DRAWING NO LDW280-52351
EO NO. A8

10/27 ISSUED BY J. DeVITA X1153 SECTION EQUIPT LINES (VD1) GROUP NO. 332 PL 25

01

NAS 9-1100

ENG 32.1 REV 3-65

GRUMMAN AIRCRAFT ENGINEERING CORP.
CODE IDENT NO. 26512
ENGINEERING ORDER

DWG. NO. LEO 280
EO NO. 769
CONTROL INFO NO. LDW280B0076

DELETE NOTE * FROM THE FOLLOWING DWGS

DRAWING NUMBER	EFFECTIVITY	CHANGE NUMBER	NOTE *
LDW280-52353 ✓	LM-2(32)	C1	8
-52354 ✓	LM-2(32)	A6	3
-52355 ✓	LM-2(32)	D1	8
-52356 ✓	LM-2 (32)	A8	5
-52351 ✓	LM-2 (32)	A9	5
-52350	LM-2 (32)	E1	31
LDW 280-52608	LM-2(32)	D2	7

DETAIL SPEC REQ ☐ CL II ENGRG CHG ☐ CL I ENGRG CHG ☑ LCD 1961 5

REASON FOR EO: BONDING NOTE NOT REQD

DESCRIPTION OF EO: DELETED NOTE *

GAEC EO RELEASE: JK 10/31/7

MODEL	PROCURING ACTIVITY NO.	GAEC UNIT NO.	SUB CONTR UNIT NO.
LM		LM-2(32)	

DRAWING CHANGE REQD: REVISE DWG ✓ RECORD EO

DISPOSITION OF PARTS: REWORK NOT SCRAP REQD

APPROVED BY	JRS			HJW	WJD		WRP	
DATE	10/26/67			10/26/67	10/27/67		10/28/67	10/30/67
	E	VDI	SUPPORT	RELIAB. GROUP	GROUP LEADER	STRESS GROUP	LIAISON ENGRG	PROJ ENGRG

PRIORITY: C

DRAWING TITLE: LINES INSTL PIPING ASCENT STAGE & DESCENT STAGE

DRAWING NO. LEO280

EO NO. 769

11-2-67

ISSUED BY J. DE VITA X 1153 (10-25-67)

SECTION EQUIP LINES (VDI)

GROUP NO. 332 PL 25

01

NAS 9-1100

ENG 32.1 REV 3-65

GRUMMAN AIRCRAFT ENGINEERING CORP.
CODE IDENT NO. 26512
ENGINEERING ORDER

DWG. NO. LDW 280-52351		EO NO. B1
CONTROL INFO NO. LDW 280 B 1980		

ADD TO F/D & B/M ON-1 INSTL

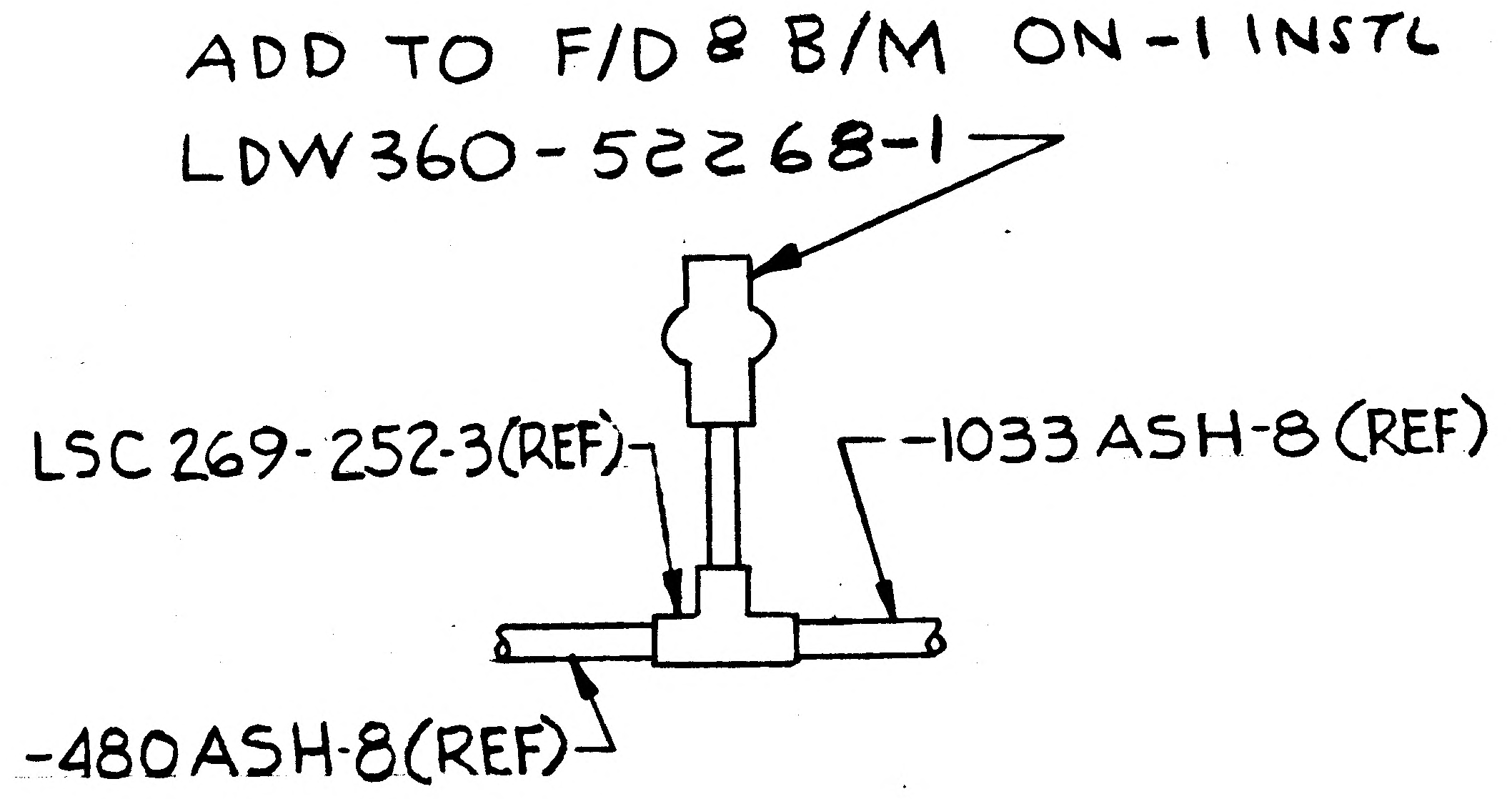
LDW360-52268-1
LSC 269-252-3(REF)
-1033 ASH-8 (REF)
-480 ASH-8 (REF)

SHT. 5.00 (ZONE 13 B)

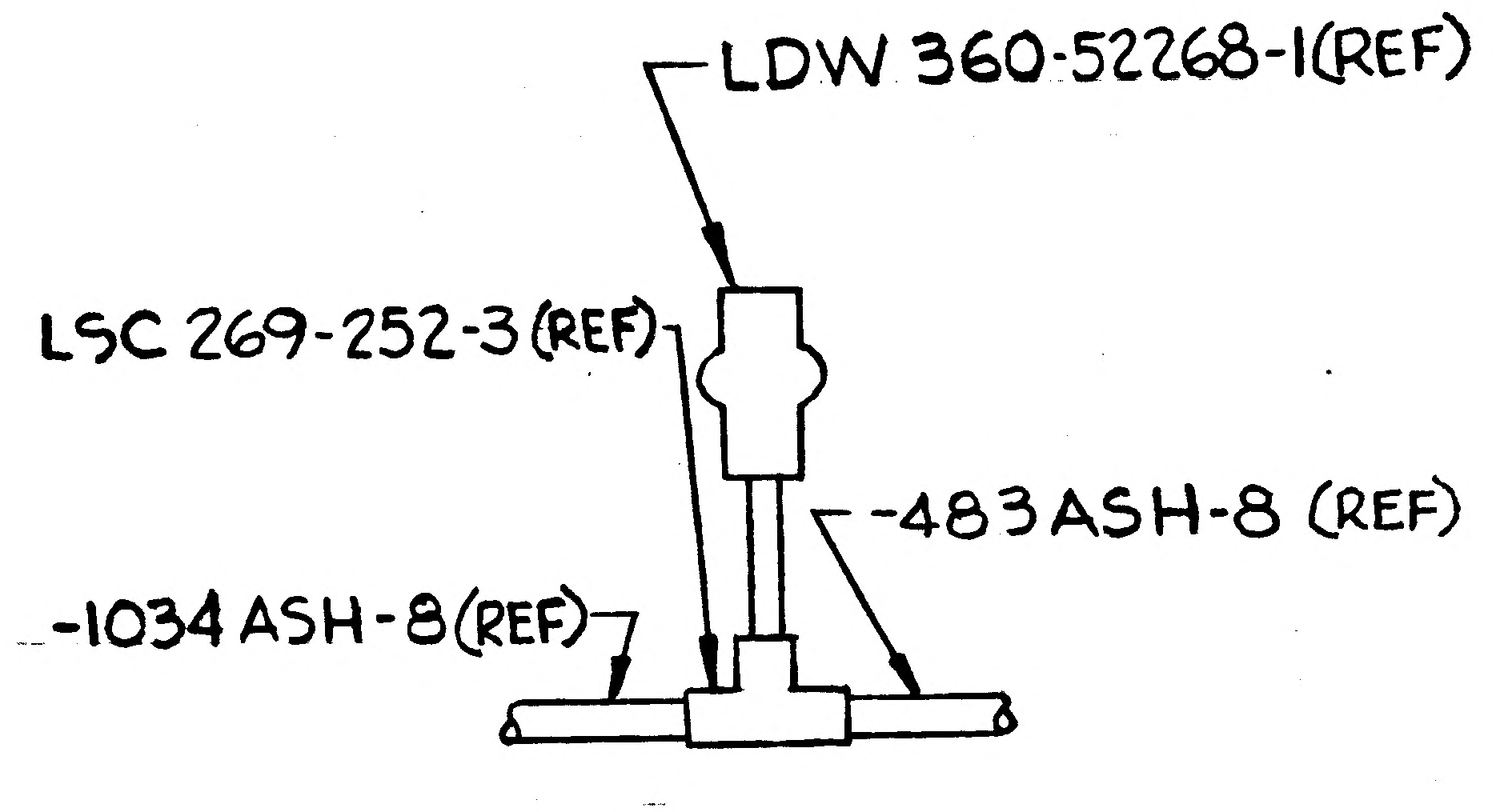
LDW 360-52268-1(REF)
LSC 269-252-3 (REF)
-483 ASH-8 (REF)
-1034 ASH-8 (REF)

SHT. 5.00 (ZONE 11 B)

LDW280-53351-1 INSTL

5

DETAIL SPEC REQ	✓	CL II ENGRG CHG		CL I ENGRG CHG	

REASON FOR EO: TO CORRECT NHA OF LDW360-52268-1 (CDR LIST)

DESCRIPTION OF EO: ADDED TO F/D & B/M LDW360-52268-1 ON-1 INSTL

GAEC EO RELEASE: H.F 2/6/68

EFFECTIVITY

MODEL	PROCURING ACTIVITY NO.	GAEC UNIT NO.	SUB CONTR UNIT NO.
LM		LM-2 (32)	

DRAWING CHANGE REQD: REVISE DWG	RECORD EO	DISPOSITION OF PARTS: REWORK	SCRAP
✓		✓	

	VDI	SUPPORT	RELIAB. GROUP	GROUP LEADER	STRESS GROUP	LIAISON ENGRG	PROJ ENGRG	
APPROVED BY								
DATE	2/2/68			2/2	2-5		2/2/68	

PRIORITY: C

DRAWING TITLE: LINES INSTALLATION HELIUM PRESSURIZATION SYSTEM

DRAWING NO. LDW280-52351

EO NO. B1

ISSUED BY J. DE VITA x1154 2-2-68 SECTION EQUIP. LINES (VDI) GROUP NO. 332 PL 25

01

NAS 9-1100

LDW280-52352 A

MODEL OR END ITEM	NEXT ASSY	MODULE OR SER NO	REQD PER MODULE OR END ITEM
LM	LDW280-52001	L M-2	1 EA
PART NO		GAEC SCH NO.	
LDW280-52352-14-3		30	

TO BE REDRAWN IN PRODUCTION FORMAT (5

SH REV STATUS FOR DESCRIPTION OF REV SEE SUBQ SH

SHEET	1	2.00	2.01	2.02	3.00	4.00	5.00	6.00	1.10
REV	A	A	A	A	A	A	A	A	A
SHEET									
REV									
SHEET									
REV									

LAST SECT LTR USED ~

LAST DASH NO USED -3

GRUMMAN REL INFO. A

PRIM NO ✓(00.)

331 [illegible]

UNLESS OTHERWISE SPECIFIED DIMENSIONS ARE IN INCHES

TOLERANCE UNLESS SPECIFIED FRACTIONS - DECIMALS - ANGLES

— — —

ORIG DWG AUTH

DETAIL SPEC REQUIREMENT ✓

CLASS II ENGRG CHANGE

CLASS I ENGRG CHANGE

CONTRACT NO NAS 9-1100

LINE ITEM 050

DOCUMENTATION TYPE II

DRAWN BY	R.B.DONDE	WEIGHTS	[illegible] 9-28
LAYOUT BY	R.BIDONDE 9/66		
CHECKED BY			
GR. LDR	J Way 9/19/66		
V.D.I.	[illegible] 7/20		
STRUCT.	[illegible] 9-20	PROJ ENGR	R M Carbee 9-21
STRUCT	Alderman 9/21	[illegible]	B. H. 10-3-66

GRUMMAN AIRCRAFT ENGRG CORP
BETHPAGE, L. I., NEW YORK

LINES INSTALLATION
ENVIRONMENTAL CONTROL SUB-
SYSTEM - CABIN

SIZE B

CODE IDENT NO. 26512

LDW280-52352 A

SCALE NONE

SHEET 1 OF 9

THIS IS AN ORIGINAL DRAWING

01

NAS 9-1100

REVISIONS FOR CONTINUATION OF REVISIONS SEE SHEET ______

CHANGE LTR	ITEM NO.	SHEET NO.	ZONE	GRUMMAN INFO ONLY PRIOR TO EVENT	DET SPEC	CLASS I	CLASS II	ENGRG ORDER	DESCRIPTION	EFFECTIVITY	DISPOSITION OF EXISTING PARTS		CHANGED BY AND DATE	ENGRG APPD	GOVT APPD
											REWORK	SCRAP			
		1.00							ADDED SH. 1.10 SH. 1 OF 9 WAS SH. 1 OF 8.						
A	1	3.00						LEO280-314	ADDED NOTE 6	LM-2 (32)	NOT	REQ'D	H. BARUCH 16 DEC 1967		
	2	2.01, 6.00	25A 34B	1				E.O. A2	ON-1, LDW280-16009-25 (1) WAS -15 (1)		✓				
	3	5.00 4.00 2.00 2.01	14B 17B 8B	1				E.O. A3	ON-1 INSTL -1668, -1669, -1670, & -1671 WAS -764, -1124, -1128, & -1129, RESPECTIVELY; -1711 WAS -1089.						
	4	4.00 2.02	2B				✓	E.O. A4 LCD 1552	ON-3 INSTL -2025 (REF) WAS -1098 (REF); ADDED CLAMPS PER LPC 280-21; ON-1 INSTL, ADDED: "APPLY GS830H SHRINK TUBE COMPLETELY ENCLOSING PLUMBING CONNECTION. NO METAL PROTRUSIONS ALLOWED WHICH MAY SNAG OR OTHERWISE DAMAGE THE SPACESUIT." ON -1, ADDED GS830 H, AS REQ'D.						
	5					✓		LEO280-708 LCD 1961	CANCELLED BY E.O. A9 (LEO280-770)		NOT	REQ'D			
	6	5.00 2.02	15C 17C				✓	E.O. A6	ON-1, ADDED: GC500J-D4T (3), GC500J-D9T (3), GB511J-08-1 (3), AN960D8L (6), MS21042L08 (3), & LDW280-10607-15 (REF).		✓				
	7	5.00 2.02	15C 17C					E.O. A7	(REF E.O. A6) ON-1; GC500J-D9T (3) SHOULD BE GC500-AA 1WD09 (3)						
	8	4.00 2.02	2B	E		✓		E.O. A8 LCD 2223 CCA 745	(REF E.O. A4) ON -1 INSTL, REMOVED; NOTE: "APPLY GS803H SHRINK TUBE COMPLETELY ENCLOSING PLUMBING CONNECTION. NO METAL PROTRUSION ALLOWED WHICH MAY SNAG OR OTHERWISE DAMAGE THE SPACESUIT." & GS830H						
	9			E				LEO280-770 LCD 1961 ⓔ	CANCELS E.O. A5 (LEO 280-708)						

CHG APPROVED LTR	GROUP LDR	VDI		STRUCT	STRUCT
A					

GRUMMAN AIRCRAFT ENGRG CORP., BETHPAGE, L. I., NEW YORK

SIZE B | CODE IDENT NO. 26512 | LDW280-52352 | A Ⓐ

SCALE NONE | SHEET 1.10

ENG 77.16 3-66

01

NAS 9-1100

CL	QTY PER ASSEMBLY				-3	-1	CODE IDENT	PART NO.	I&T	NOMENCLATURE OR DESCRIPTION	MATERIAL	GOVT SPEC	COML SPEC	STOCK SIZE	PROCESS SYM	FINISH NO.	ZONE
N						1		-1095ECC-6	E	TUBE ASSY	SEE DWG						
↕						1		-1093ECC-4	↕	↕	↕						
↕						1		-1092ECC-4	↕	↕	↕						
↕						1		-1091ECC-4	↕	↕	↕						
↕						1		-1090ECC-4	E	TUBE ASSY	SEE DWG						
↕						1		-1711 ECC-4	E	TUBE ASSY	SEE DWG						
↕						1		-1088ECC-4	↕	↕	↕						
↕						1		-1087ECC-4	↕	↕	↕						
↕						1		-1086ECC-4	↕	↕	↕						
↕						1		-1085ECC-4	E	TUBE ASSY	SEE DWG						
↕						1		-1044ECC-4	E	TUBE ASSY	SEE DWG						
↕						1		-1043ECC-4	E	TUBE ASSY	SEE DWG						
↕						1		-1668ECC-4	E	TUBE ASSY	SEE DWG						
↕						1		-760ECC-4	E	TUBE ASSY	SEE DWG						
↕						1		-758ECC-4	E	TUBE ASSY	SEE DWG						
↕						1		-755ECC-4	↕	↕	↕						
↕						1		-754ECC-4	↕	↕	↕						
↕						1		-753ECC-4	↕	↕	↕						
↕						1		-751ECC-4	E	TUBE ASSY	SEE DWG						
N						1		-745ECC-6	E	TUBE ASSY	SEE DWG						
								LDW280-16000-									
N								LDW280-52352-3	E	LINES INSTL (A)							
E								LDW280-52352-3	E	LINES INSTL.							

CL: CLEANLINESS LEVEL

SYM OR NO.	PROCESS OR FINISH	GRUMMAN SPEC OR MILITARY SPEC	SYM OR NO.	PROCESS OR FINISH	GRUMMAN SPEC OR MILITARY SPEC	SYM OR NO.	PROCESS OR FINISH	GRUMMAN SPEC OR MILITARY SPEC

I & T: IDENTIFICATION AND TRACEABILITY IN ACCORDANCE WITH : NONE

GRUMMAN AIRCRAFT ENGRG CORP, BETHPAGE, L. I., NEW YORK

SIZE	CODE IDENT NO.		
B	26512	LDW280-52352	A (A)
SCALE NONE		SHEET 2.00	

ENG 77.2 7-65

01

NAS 9-1100

N						1		LDW330M10023-11	E	ORIFICE	SEE DWG						
						1		LDW330M10022-17									
						1		LDW330M10022-5									
						1		LDW330M10022-3		ORIFICE	SEE DWG						
						1		LDW280-16009-25		FLEX HOSE ASSY	SEE DWG						
						1		LDW280-16009-9									
						2		LDW280-16009-7									
						1		LDW280-16009-5									
						1		LDW280-16009-3	E	FLEX HOSE ASSY	SEE DWG						
						1		-1313ECC-4	E	TUBE ASSY	SEE DWG						
						1		-1312ECC-4									
						1		-1311ECC-4									
						1		-1310ECC-6									
						1		-1263ECC-6									
						1		-1255ECC-6									
						1		-1254ECC-6									
						1		-1252ECC-4	E	TUBE ASSY	SEE DWG						
						1		-1671ECC-4	E	TUBE ASSY	SEE DWG						
						1		-1670ECC-4									
						1		-1127ECC-4									
						1		-1669ECC-4									
						1		-1123ECC-4	E	TUBE ASSY	SEE DWG						
N					1			-1097 OLP-4	E	TUBE ASSY	SEE DWG						
CL					-3	-1	CODE IDENT	PART NO.	I&T	NOMENCLATURE OR DESCRIPTION	MATERIAL	GOVT SPEC	COML SPEC	STOCK SIZE	PROCESS SYM	FINISH NO.	ZONE
	QTY PER ASSEMBLY																

SYM OR NO.	PROCESS OR FINISH	GRUMMAN SPEC OR MILITARY SPEC	SYM OR NO.	PROCESS OR FINISH	GRUMMAN SPEC OR MILITARY SPEC	SYM OR NO.	PROCESS OR FINISH	GRUMMAN SPEC OR MILITARY SPEC

I & T: IDENTIFICATION AND TRACEABILITY IN ACCORDANCE WITH : NONE

GRUMMAN AIRCRAFT ENGRG CORP, BETHPAGE, L. I., NEW YORK

SIZE	CODE IDENT NO.		
B	26512	LDW 280-52352	A Ⓐ
SCALE NONE		SHEET 2.01	

ENG 77.2 7-66

01

NAS 9-1100

A						3		MS21042L08	E	NUT	STD. PART						
A						3		GB511J-08-1	E	BOLT	GRUMMAN STD						
A						3		GC500AA-1WD09	E	CLAMP	GRUMMAN STD						
A						3		GC500J-D4T	E	CLAMP	GRUMMAN STD						
A						6		AN960D8L	E	WASHER	STD. PART						
A						2		AN960D916L	E	WASHER	STD. PART						
↑									↑								
						2		LSC330-225-1		DISCONNECT	SEE NOTE #4						
						2		LSC269-199-1016		SEAL	↑						
						2		LSC269-174-1		CROSS, REDUCER							
						1		LSC269-159-1		TEE, REDUCER							
						2		LSC269-135-6		TEE, REDUCER							
						2		LSC269-124-4									
						2		LSC269-119-4		NUT							
↓						9		LSC269-118-6	↓	SEAL	↓						
A					2	44		LSC269-118-4	E	SEAL	SEE NOTE #4						
CL					-3	-1	CODE IDENT	PART NO.	I&T	NOMENCLATURE OR DESCRIPTION	MATERIAL	GOVT SPEC	COML SPEC	STOCK SIZE	PROCESS SYM	FINISH NO.	ZONE
	QTY PER ASSEMBLY																

SYM OR NO.	PROCESS OR FINISH	GRUMMAN SPEC OR MILITARY SPEC	SYM OR NO.	PROCESS OR FINISH	GRUMMAN SPEC OR MILITARY SPEC	SYM OR NO.	PROCESS OR FINISH	GRUMMAN SPEC OR MILITARY SPEC

I&T: IDENTIFICATION AND TRACEABILITY IN ACCORDANCE WITH : NONE

GRUMMAN AIRCRAFT ENGRG CORP, BETHPAGE, L. I., NEW YORK

SIZE B | CODE IDENT NO. 26512 | LDW280-52352 | A

SCALE NONE | SHEET 2.02

ENG 77.2 7-65

01

NAS 9-1100

NOTES:

1. TUBE NUMBERS ARE DASH NUMBERS OF LDW280-16000.
2. TUBE ASSYS & FITTINGS TO BE CLEANED TO LEVEL "N" OF LSP 14-0011 PRIOR TO INSTL OXYGEN SYSTEM TO BE MAINTAINED TO LEVEL "N" OTHER SYSTEMS TO LEVEL "E"
3. ALL GAMAH JOINT CONNECTIONS SHALL BE MADE IN ACCORDANCE WITH LSP 14-17402
4. COMMERCIAL PART; SEE SPECIFICATION CONTROL DRAWING BEFORE ORDERING.
5. SUBSTITUTION OF AN742D4, AN742D6 FOR GC500J-4DT, GC500J-6DT & GC12H-5 CLAMPS FOR GC500J-5DT CLAMPS IS PERMISSIBLE.
6. SUBSTITUTION OF NAS1132V *, AN525-832R *, OR AN525-832- * BOLTS, FOR THE GB511J-08 - *, BOLT IS PERMISSIBLE.

GRUMMAN AIRCRAFT ENGRG CORP., BETHPAGE, L. I., NEW YORK			
SIZE B	CODE IDENT NO. 26512	LDW280-52352	A
SCALE		SHEET 3.00	

ENG 73.1 6-64

01 NAS 9-1100

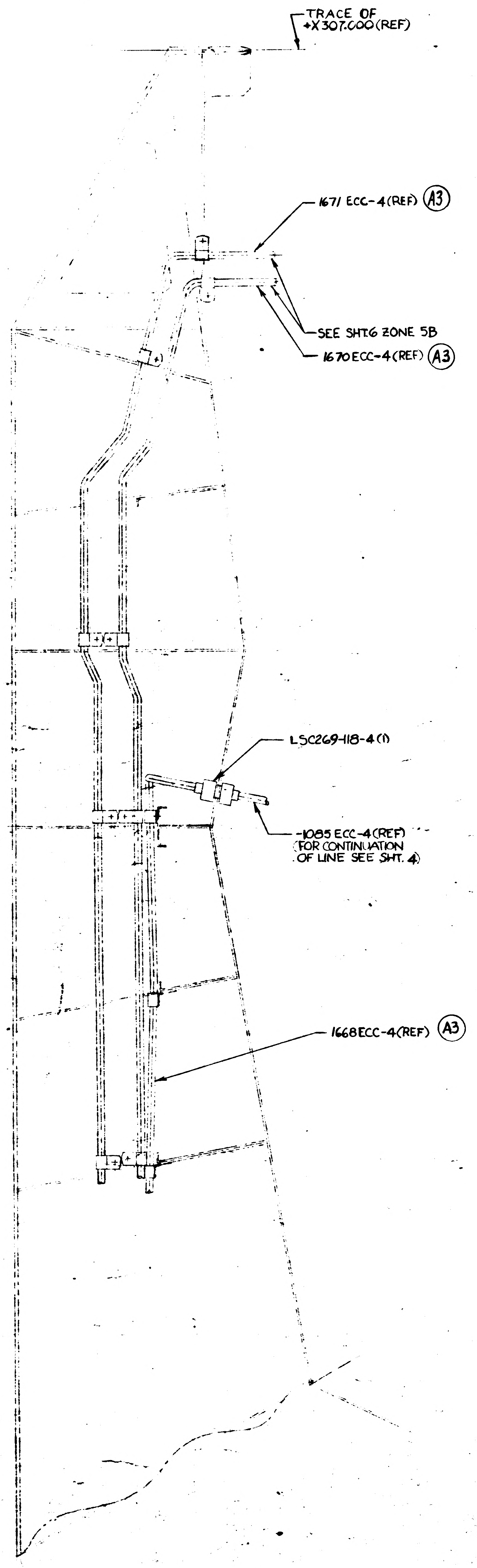
TRACE OF
+X307.000 (REF)
1671 ECC-4 (REF) (A3)
SEE SHT.6 ZONE 5B
1670 ECC-4 (REF) (A3)
LSC269-118-4 (1)
-1085 ECC-4 (REF)
(FOR CONTINUATION
OF LINE SEE SHT. 4)
1668 ECC-4 (REF) (A3)

VIEW A-A
(½ SCALE)

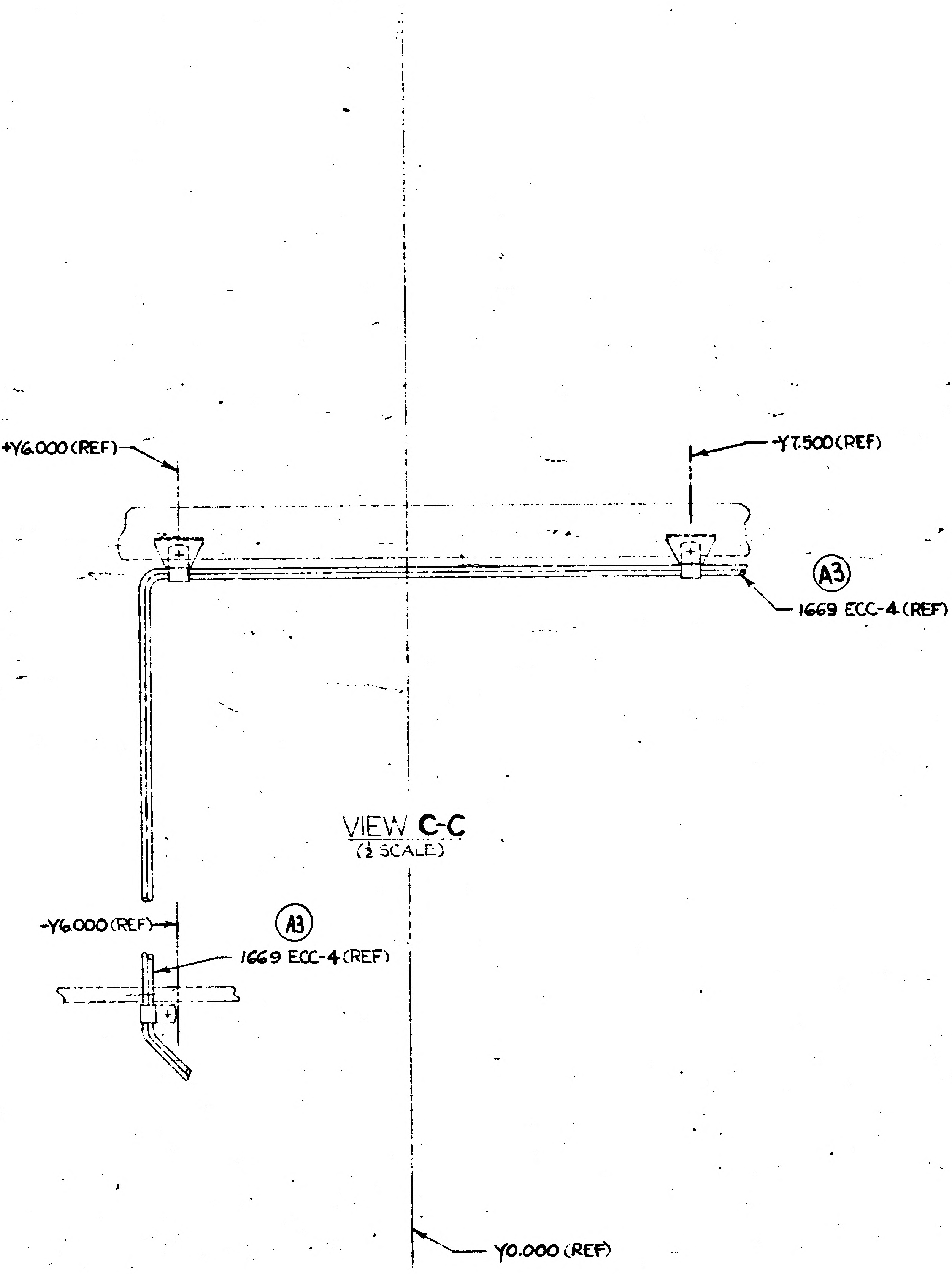
+Y6.000 (REF)
-Y7.500 (REF)
(A3)
1669 ECC-4 (REF)
-Y6.000 (REF)
(A3)
1669 ECC-4 (REF)
Y0.000 (REF)

VIEW C-C
(½ SCALE)

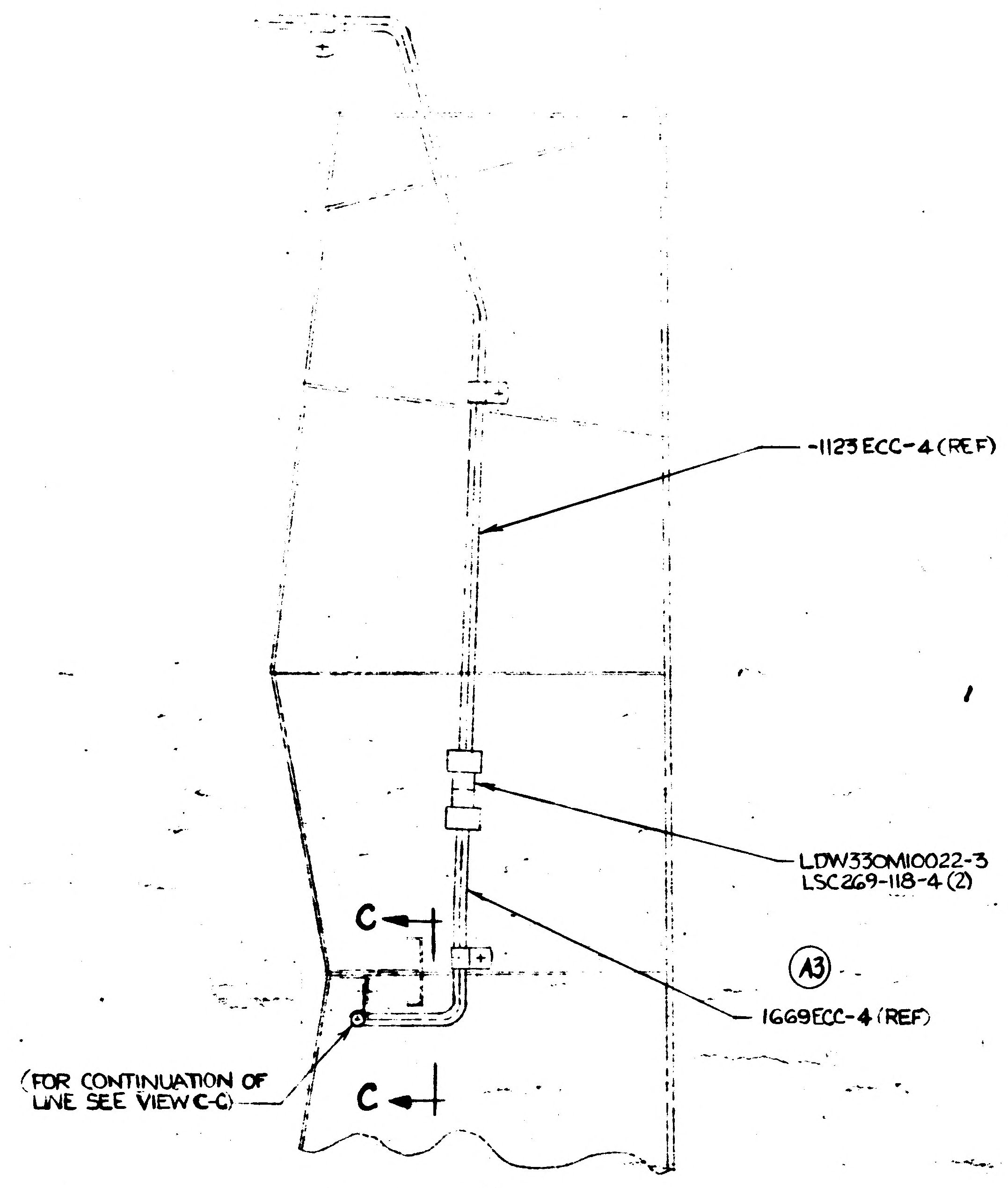
-1123 ECC-4 (REF)
LDW330M10022-3
LSC269-118-4 (2)
C
C
(A3)
1669 ECC-4 (REF)
(FOR CONTINUATION OF
LINE SEE VIEW C-C)

VIEW B-B
(½ SCALE)

01/03 NAS 9-1100

-1123 ECC-4 (REF)

LDW330M10022-3
LSC269-118-4 (2)

(A3)
669ECC-4 (REF)

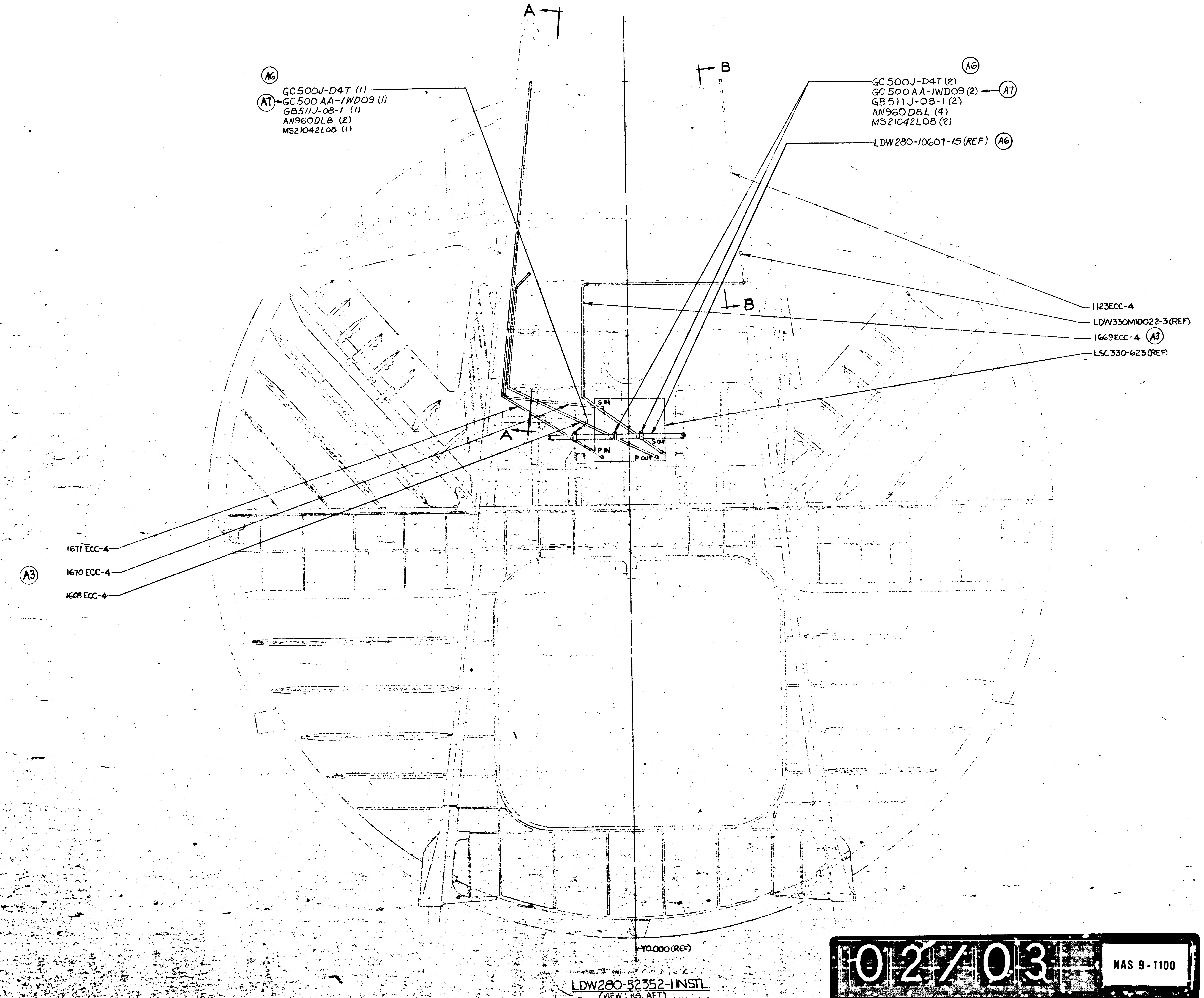
A
B
(A6)
GC500J-D4T (1)
(A7) GC500 AA-1WD09 (1)
GB511J-08-1 (1)
AN960DL8 (2)
MS21042L08 (1)
(A6)
GC500J-D4T (2)
GC500AA-1WD09 (2) (A7)
GB511J-08-1 (2)
AN960D8L (4)
MS21042L08 (2)
LDW280-10607-15 (REF) (A6)
B
1123ECC-4
LDW330M10022-3 (REF)
1669ECC-4 (A3)
LSC330-623 (REF)
S IN
S OUT
P IN
P OUT
A
1671 ECC-4
(A3)
1670 ECC-4
1668 ECC-4
Y0.000 (REF)

LDW280-52352-1 INSTL.
(VIEW LKG. AFT)

02/03

NAS 9-1100

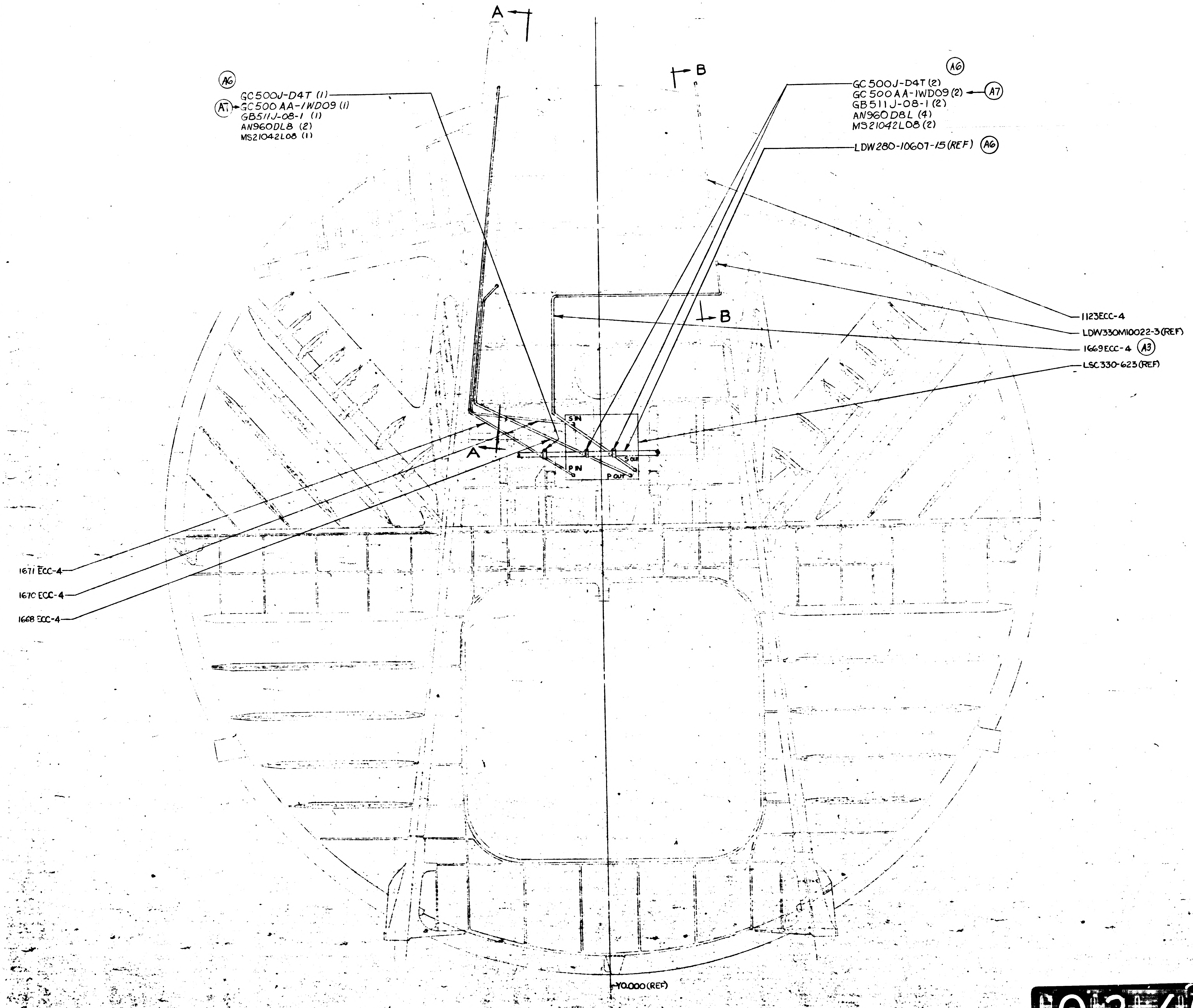
A
A
B
B
A6
GC500J-D4T (1)
A7
GC500 AA-1WD09 (1)
GB511J-08-1 (1)
AN960DL8 (2)
MS21042L08 (1)
A6
GC500J-D4T (2)
GC500AA-1WD09 (2)
A7
GB511J-08-1 (2)
AN960D8L (4)
MS21042L08 (2)
LDW280-10607-15 (REF)
A6
1123ECC-4
LDW330M10022-3 (REF)
1669ECC-4
A3
LSC330-623 (REF)
S IN
S OUT
P IN
P OUT
1671 ECC-4
1670 ECC-4
1668 ECC-4
Y0.000 (REF)

LDW280-52352-1 INSTL.
(VIEW LKG. AFT)

MANUFACTURING OPERATIONS
UNLESS OTHERWISE SPECIFIED
NOTES CHECKED ✓ APPLY TO THIS DWG.

PART NUMBER
AND ALL OTHER MARKINGS
IN REGION MARKED ☒
USE BOTH SIDES IF NECESSARY.

FILLET AND INSIDE CORNER
RADII TOLERANCES
.016R TO .062R ± .010
.063R TO .250R ± .015
OVER .250R ± .030

DEPTH SHOWN FOR TAPPED HOLES IS FULL THDS. 2-3 IMP THDS. BEYOND PERMISSIBLE.

EXTERNAL THREAD LENGTH SHOWN INCLUDES 2 IMPERFECT THREADS MAX.

DO NOT CADMIUM PLATE & PAINT HOLES OR SURFACES MARKED WITH DOUBLE ASTERISK.

MISMATCH STEP OF ± .005 PERMISSIBLE DUE TO CHANGE OF CUTTERS AT INSIDE INTERSECTING SURFACES.

DIAMETERS MARKED MUST BE CONCENTRIC WITHIN FULL INDICATOR READING

HOLES MUST BE KEPT FREE OF CHROME PLATING SOLUTION.

ALL DIMENSIONS SHOWN TO BE MET AFTER CADMIUM PLATING. THICKNESS OF PLATE .0003 MIN. TO .0005 MAX. MIN. THICKNESS TO BE .0002 ON THREADED AREAS. NO ALLOWANCE FOR PLATING IN HOLES

$\sqrt[125]{}$ SURFACE ROUGHNESS INCLUDING REAMED HOLES PER MIL-STD-10

$\sqrt[200]{}$ FOR ALL DRILLED HOLES

REMOVE ALL BURRS. BREAK ALL EDGES .015-.031

INSPECTION INFORMATION MINIMUM PERMISSIBLE AVERAGE EDGE DISTANCE MARKED IS

SYMBOL $\not f$ DENOTES SURFACE TO BE MACHINED

UNLESS OTHERWISE SPECIFIED TOLERANCE ON FLANGES IS ± 1/32

LENGTHS OF AN, NAS & MS AL ALY RIVETS SHORTER THAN 1 INCH ARE NOT SPECIFIED.

TOLERANCE ON LOFTED DELINEATIONS IS

DWG. SIZE 34 X

03/03
NAS 9-1100

GRUMMAN AIRCRAFT ENGRG CORP., BETHPAGE, L. I., NEW YORK
LEM
MODEL OR END ITEM
SIZE J
CODE IDENT NO. 26512
LDW280-5[illegible]52
SCALE ½ & NOTED
SHEET 3 OF 3

THIS IS AN ORIGINAL DRAWING

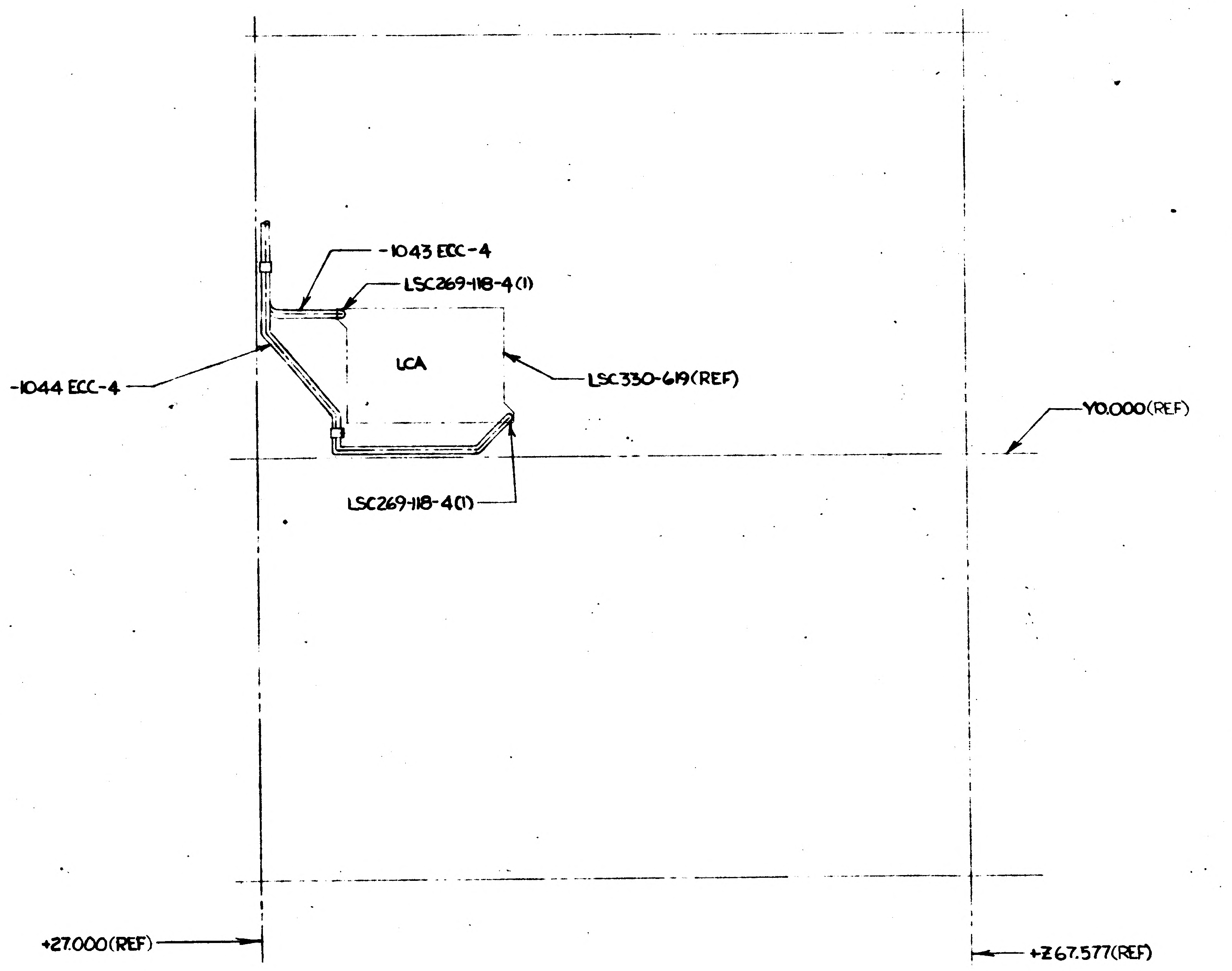
-1043 ECC-4
LSC269-118-4(1)
-1044 ECC-4
LCA
LSC330-619(REF)
Y0.000(REF)
LSC269-118-4(1)
+27.000(REF)
+Z67.577(REF)

LDW280-52352-1 INSTL
(CABIN FLOOR-PLAN VIEW)

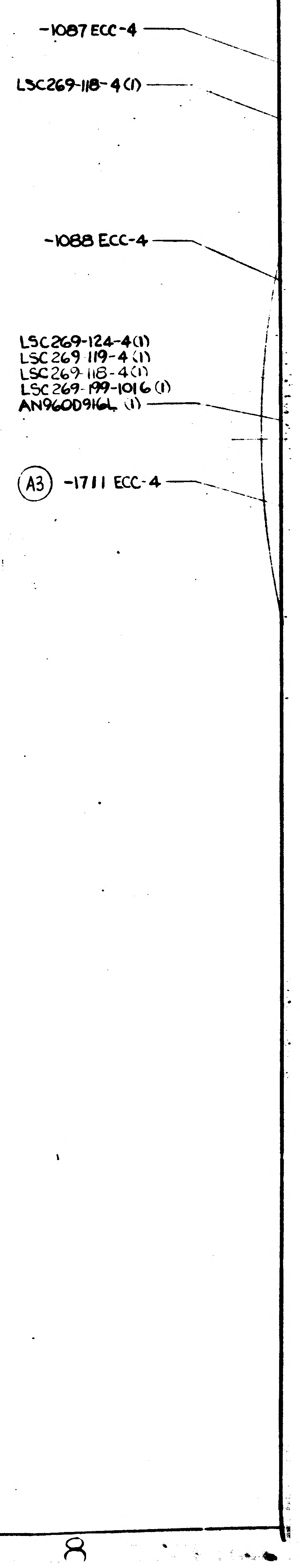
-1087 ECC-4
LSC269-118-4(1)
-1088 ECC-4
LSC269-124-4(1)
LSC269-119-4(1)
LSC269-118-4(1)
LSC269-199-1016(1)
AN960D916L (1)
A3
-1711 ECC-4

3/3

011/03 NAS 9-1100

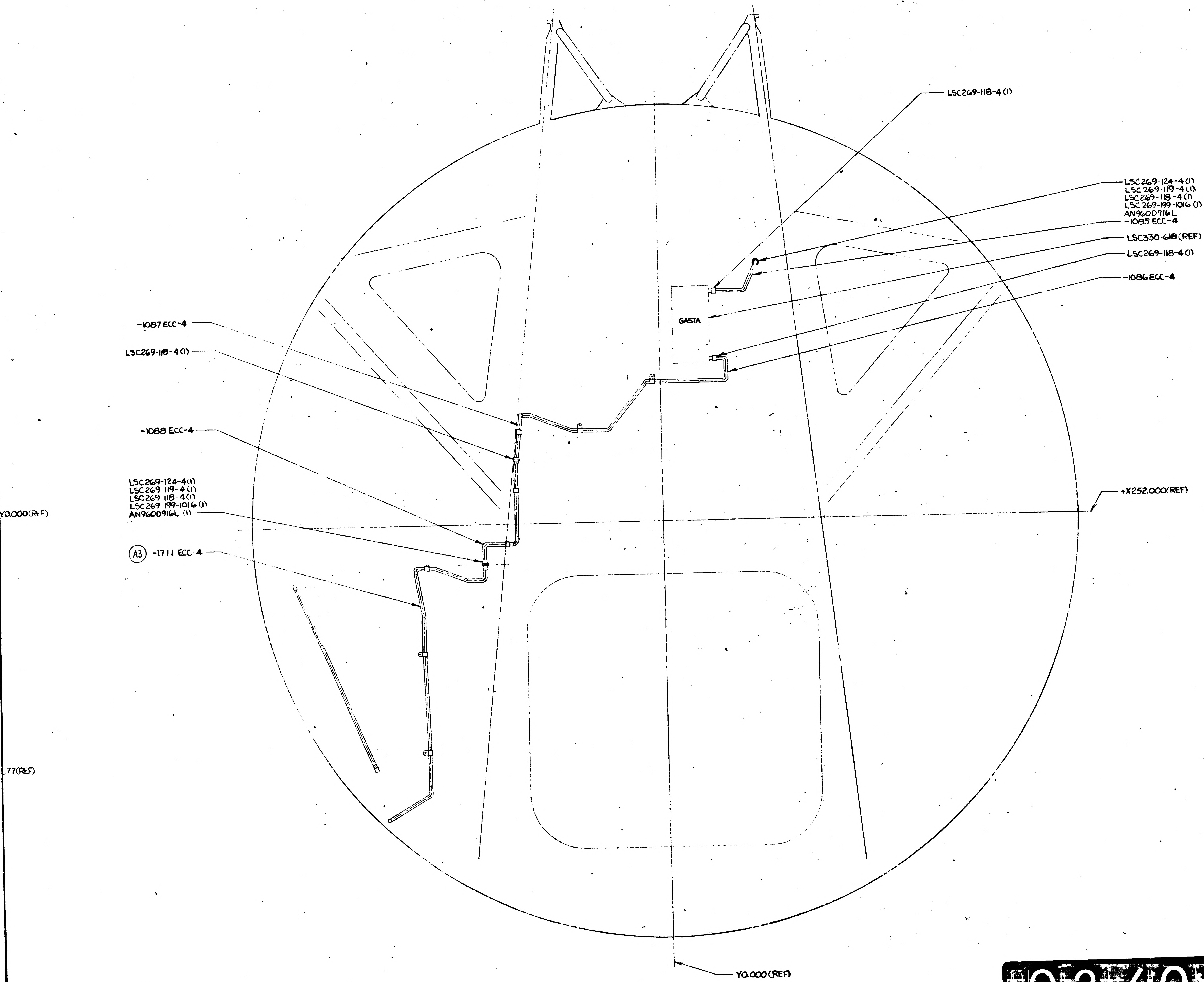
LSC269-118-4(1)
LSC269-124-4(1)
LSC269-119-4(1)
LSC269-118-4(1)
LSC269-199-1016(1)
AN960D916L
-1085 ECC-4
LSC330-618(REF)
LSC269-118-4(1)
-1086 ECC-4
GASTA
-1087 ECC-4
LSC269-118-4(1)
-1088 ECC-4
LSC269-124-4(1)
LSC269-119-4(1)
LSC269-118-4(1)
LSC269-199-1016(1)
AN960D916L (1)
A3 -1711 ECC-4
Y0.000(REF)
77(REF)
+X252.000(REF)
Y0.000(REF)

LDW280-52352-1 INSTL.
(VIEW LKS OUTBD.-FRONT FACE)

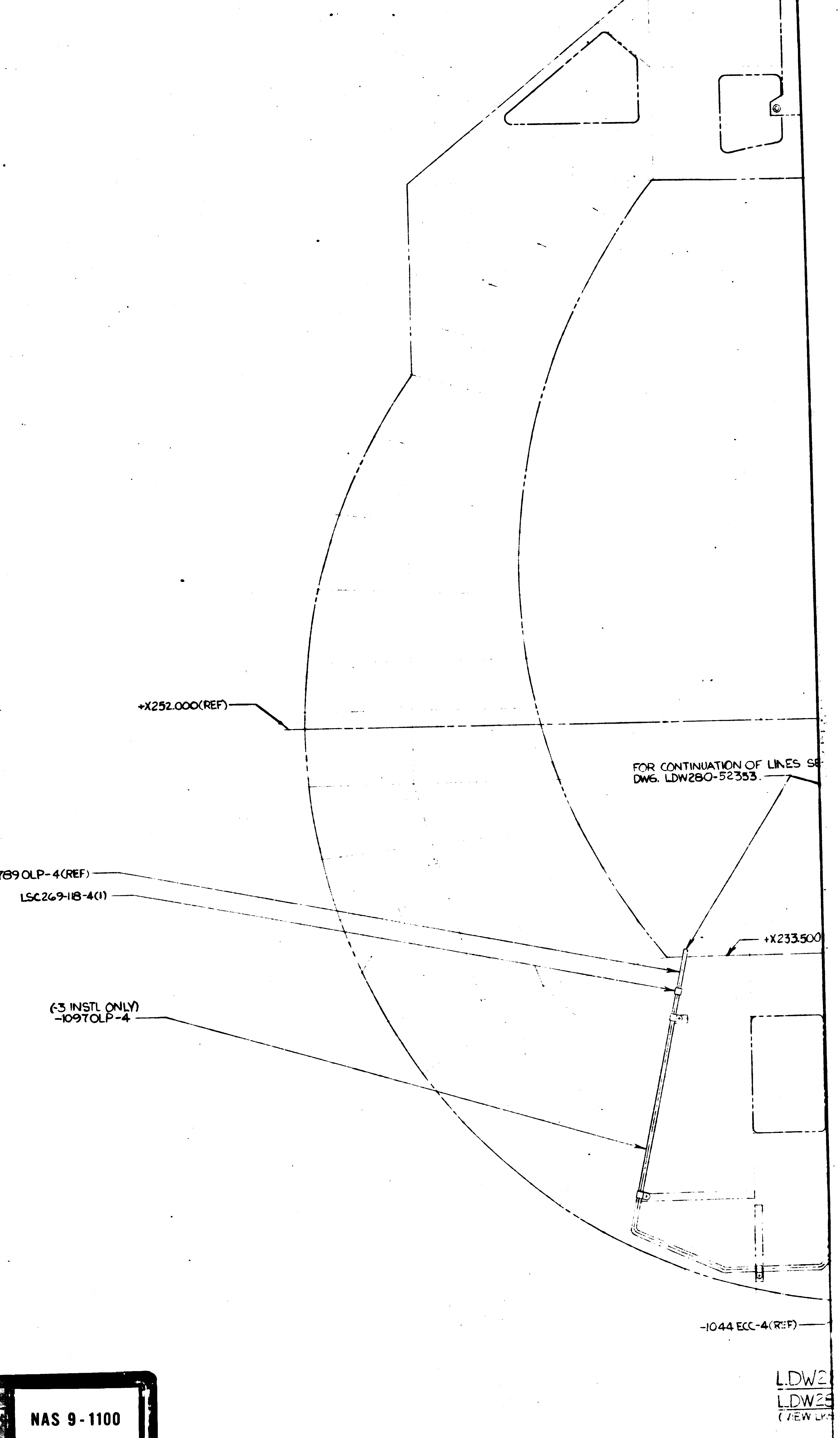
+X252.000(REF)
FOR CONTINUATION OF LINES SE
DWG. LDW280-52353.
-789 OLP-4(REF)
LSC269-118-4(1)
+X233.500
(-3 INSTL ONLY)
-1097 OLP-4
-1044 ECC-4(REF)

LDW2
LDW2
(VIEW LK

102/103 NAS 9-1100

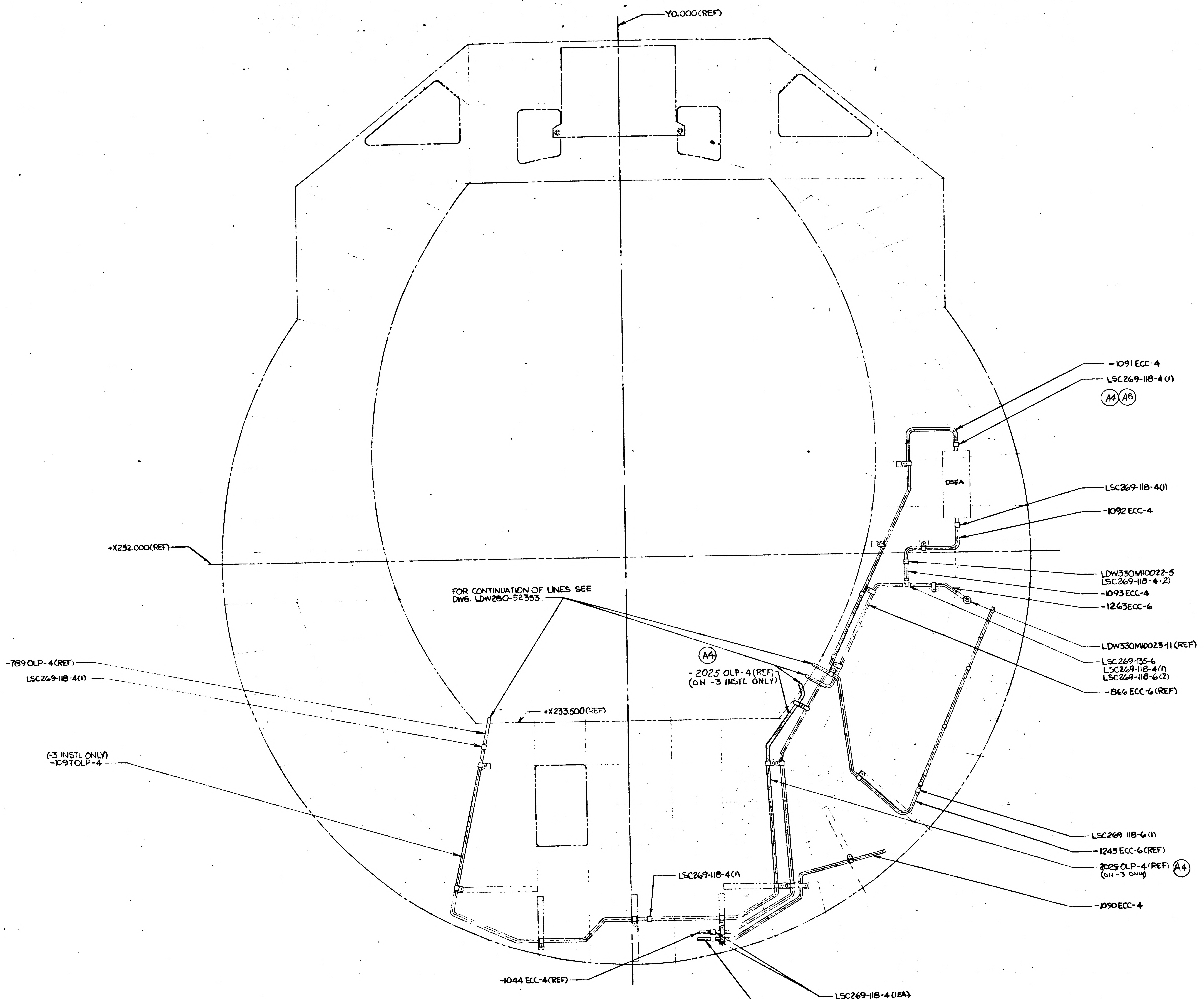
Y0.000(REF)
+X252.000(REF)
FOR CONTINUATION OF LINES SEE DWG. LDW280-52353.
-789 OLP-4(REF)
LSC269-118-4(1)
(-3 INSTL ONLY)
-1097OLP-4
+X233.500(REF)
A4
-2025 OLP-4(REF)
(ON -3 INSTL ONLY)
-1091 ECC-4
LSC269-118-4(1)
A4
A8
DSEA
LSC269-118-4(1)
-1092 ECC-4
LDW330M10022-5
LSC269-118-4(2)
-1093 ECC-4
-1263ECC-6
LDW330M10023-11(REF)
LSC269-135-6
LSC269-118-4(1)
LSC269-118-6(2)
-866 ECC-6(REF)
LSC269-118-6(1)
-1245 ECC-6(REF)
-2025 OLP-4(REF)
(ON -3 ONLY)
A4
-1090 ECC-4
LSC269-118-4(1)
-1044 ECC-4(REF)
LSC269-118-4(1EA.)
-1043 ECC-4 (REF)

LDW280-52352-3 O_2 INSTL.

LDW280-52352-1 INSTL.

(VIEW LKG. AFT - +Z27.000 BHD.)

MANUFACTURING OPERATIONS

UNLESS OTHERWISE SPECIFIED NOTES CHECKED √ APPLY TO THIS DWG.

- PART NUMBER AND ALL OTHER MARKINGS IN REGION MARKED ▭ USE BOTH SIDES IF NECESSARY.
- FILLET AND INSIDE CORNER RADII TOLERANCES
  - .016R TO .062R ± .010
  - .063R TO .250R ± .015
  - OVER .250R ± .030
- DEPTH SHOWN FOR TAPPED HOLES IS FULL THDS. 2-3 IMP THDS. BEYOND PERMISSIBLE.
- EXTERNAL THREAD LENGTH SHOWN INCLUDES 2 IMPERFECT THREADS MAX.
- DO NOT CADMIUM PLATE & PAINT HOLES OR SURFACES MARKED WITH DOUBLE ASTERISK.
- MISMATCH STEP OF ± .005 PERMISSIBLE DUE TO CHANGE OF CUTTERS AT INSIDE INTERSECTING SURFACES.
- DIAMETERS MARKED MUST BE CONCENTRIC WITHIN FULL INDICATOR READING
- HOLES MUST BE KEPT FREE OF CHROME PLATING SOLUTION.
- ALL DIMENSIONS SHOWN TO BE MET AFTER CADMIUM PLATING. THICKNESS OF PLATE .0003 MIN. TO .0005 MAX. MIN. THICKNESS TO BE .0002 ON THREADED AREAS. NO ALLOWANCE FOR PLATING IN HOLES
- 125 √ SURFACE ROUGHNESS INCLUDING REAMED HOLES PER MIL-STD-10
- 200 √ FOR ALL DRILLED HOLES
- REMOVE ALL BURRS. BREAK ALL EDGES .015-.031
- INSPECTION INFORMATION MINIMUM PERMISSIBLE AVERAGE EDGE DISTANCE MARKED IS
- SYMBOL √ DENOTES SURFACE TO BE MACHINED
- UNLESS OTHERWISE SPECIFIED TOLERANCE ON FLANGES IS ± 1/32
- LENGTHS OF AN, NAS & MS AL ALY RIVETS SHORTER THAN 1 INCH ARE NOT SPECIFIED.
- TOLERANCE ON LOFTED DELINEATIONS IS

DWG SIZE 34

031/031

NAS 9-1100

	GRUMMAN AIRCRAFT ENGRG CORP., BETHPAGE, L. I., NEW YORK		
LEM	SIZE J	CODE IDENT NO. 26512	LDW280-5 35
MODEL OR END ITEM	SCALE		SHEET 4

THIS IS AN ORIGINAL DRAWING

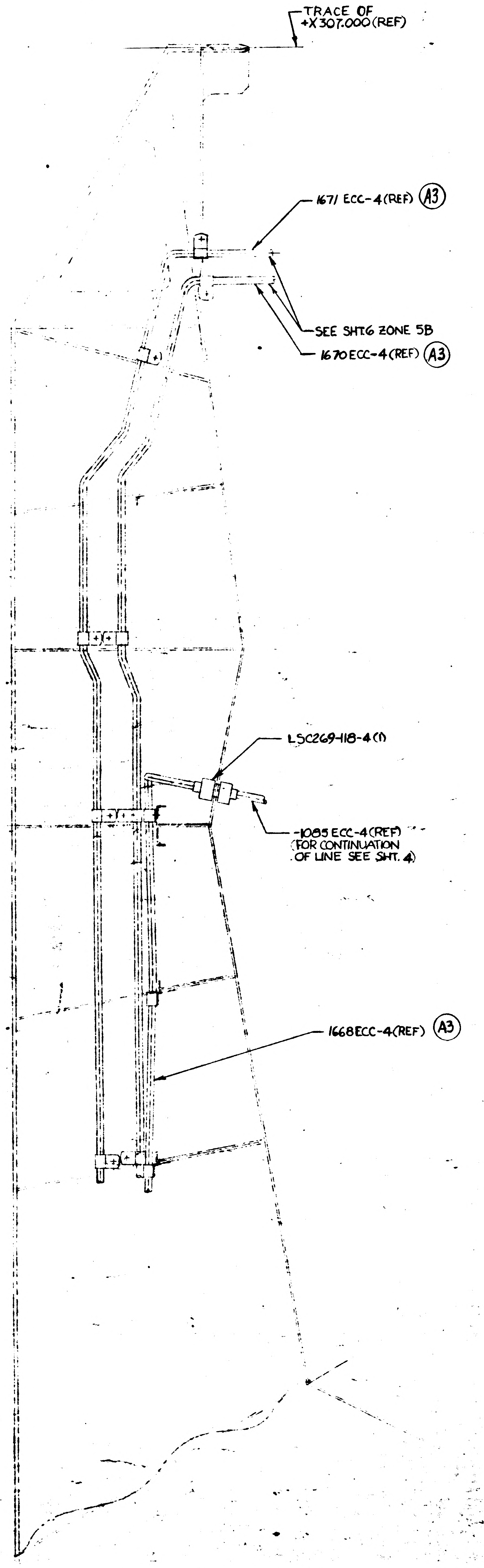
TRACE OF
+X307.000(REF)
1671 ECC-4(REF) (A3)
SEE SHT.6 ZONE 5B
1670 ECC-4(REF) (A3)
LSC269-118-4(1)
-1085 ECC-4(REF)
(FOR CONTINUATION
OF LINE SEE SHT. 4)
1668ECC-4(REF) (A3)

VIEW A-A
(½ SCALE)

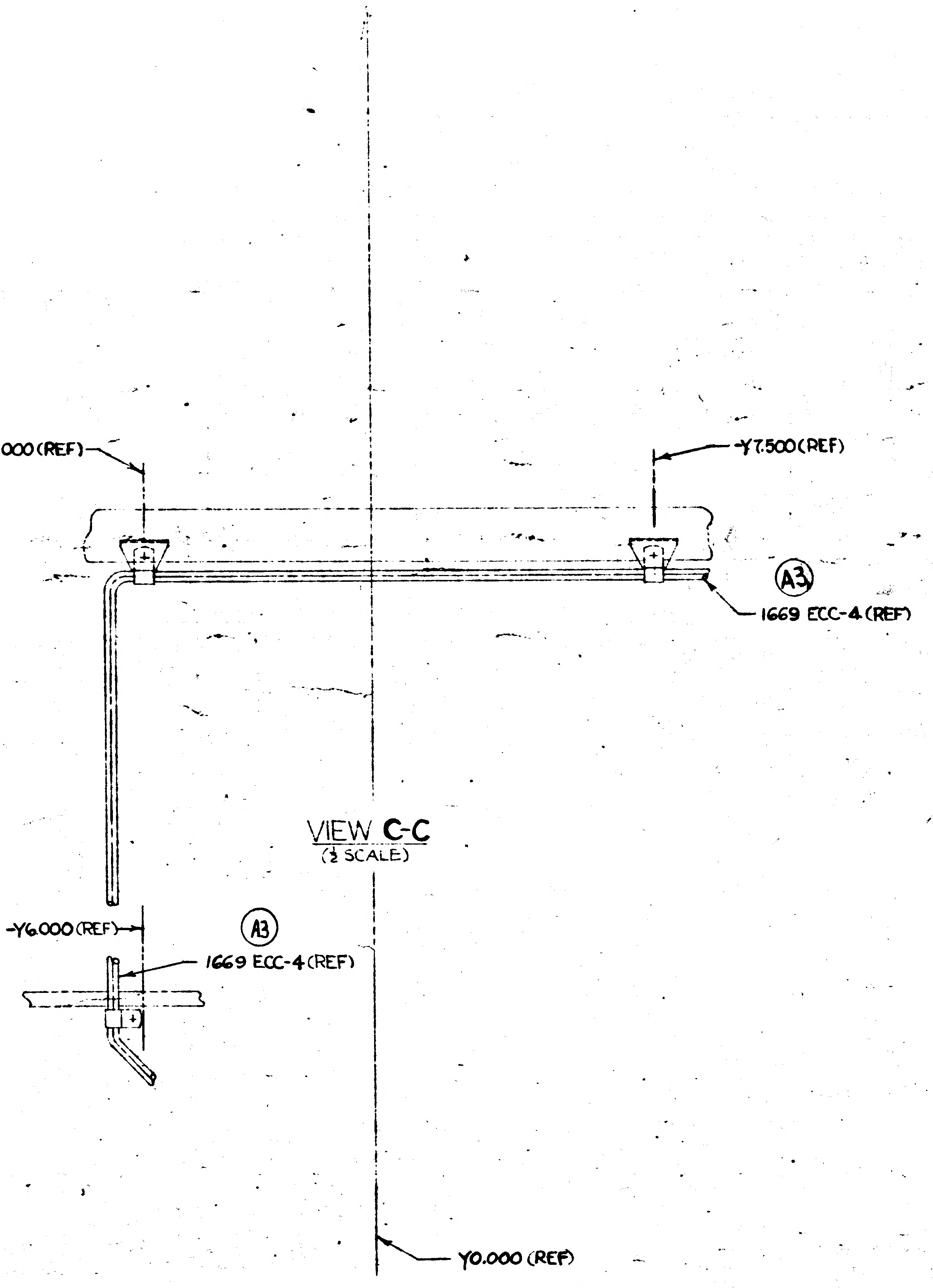
+Y6.000(REF)
-Y7.500(REF)
(A3)
1669 ECC-4(REF)
-Y6.000(REF)
(A3)
1669 ECC-4(REF)
Y0.000(REF)

VIEW C-C
(½ SCALE)

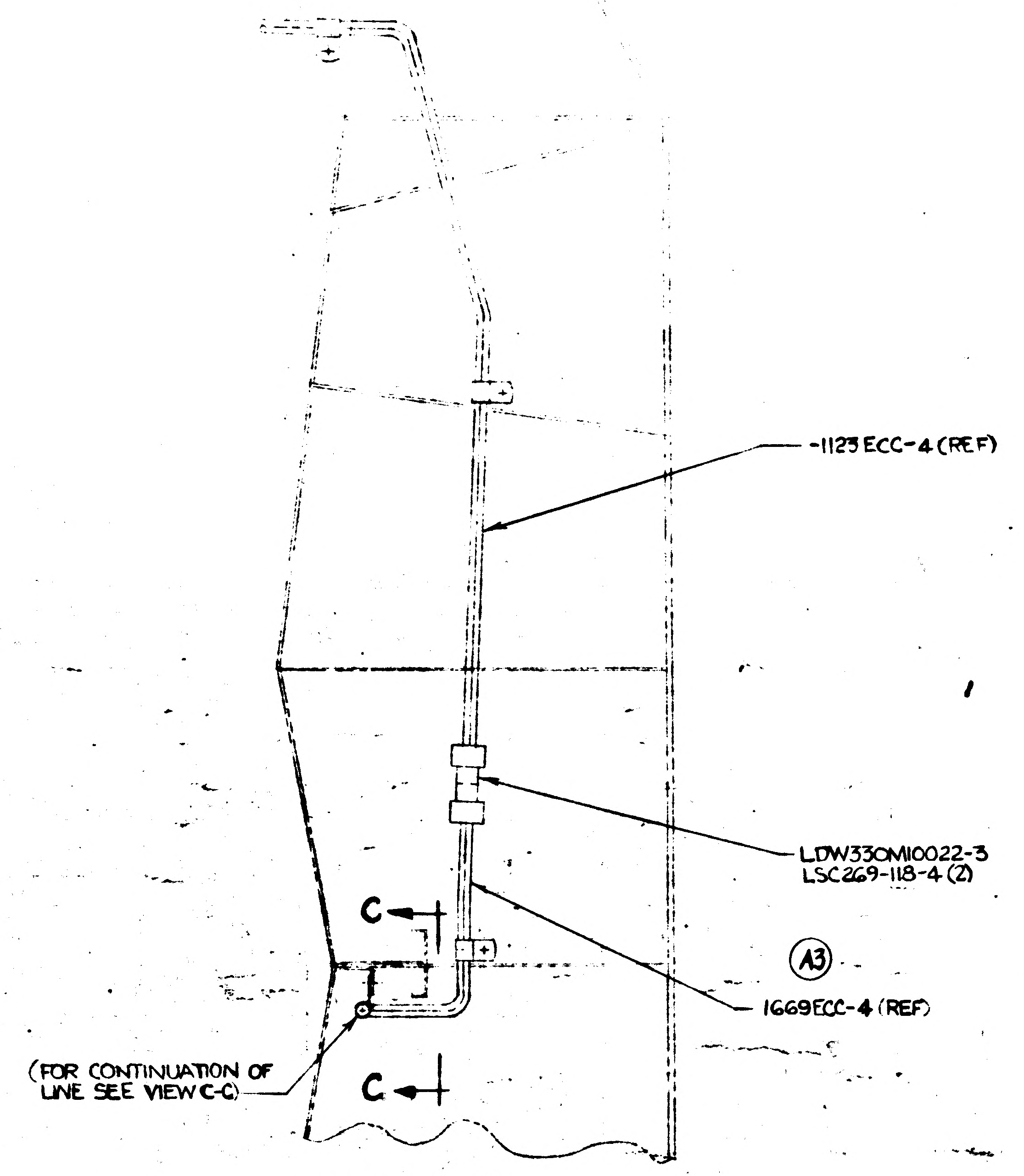
-1123 ECC-4(REF)
LDW330M10022-3
LSC269-118-4(2)
(A3)
1669ECC-4(REF)
C
C
(FOR CONTINUATION OF
LINE SEE VIEW C-C)

VIEW B-B
(½ SCALE)

01/03 NAS 9-1100

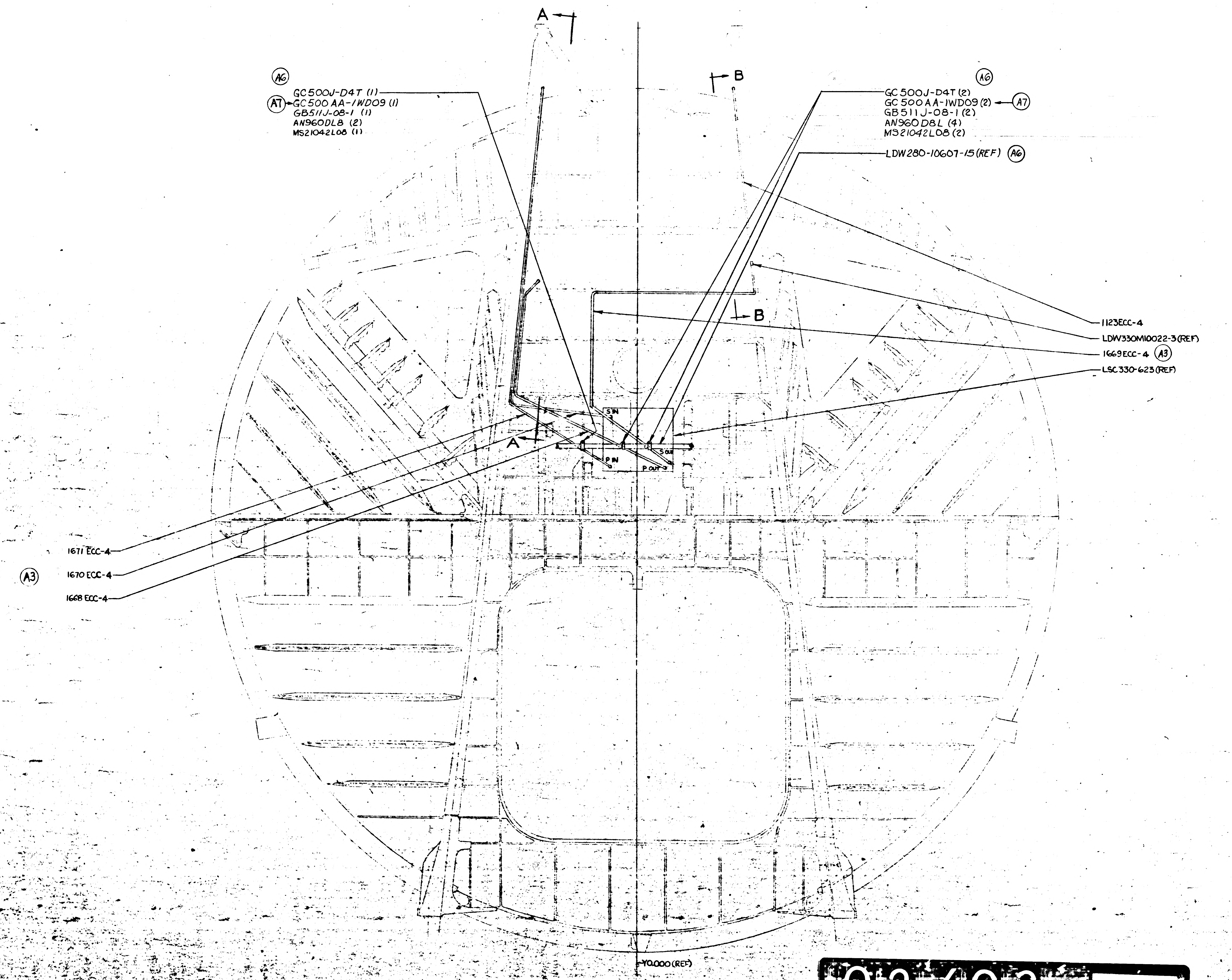
A
B
A6
GC500J-D4T (1)
A7
GC500 AA-1WD09 (1)
GB511J-08-1 (1)
AN960DL8 (2)
MS21042L08 (1)
A6
GC500J-D4T (2)
GC500 AA-1WD09 (2)
A7
GB511J-08-1 (2)
AN960D8L (4)
MS21042L08 (2)
LDW280-10607-15 (REF)
A6
1123ECC-4
LDW330M10022-3 (REF)
1669ECC-4
A3
LSC330-623 (REF)
S IN
S OUT
P IN
P OUT
1671 ECC-4
A3
1670 ECC-4
1668 ECC-4
Y0.000 (REF)

LDW280-52352-1 INSTL.
(VIEW LKG. AFT)

02/03

NAS 9-1100

LEM

MODEL OR END ITEM

17 16 15 14 13

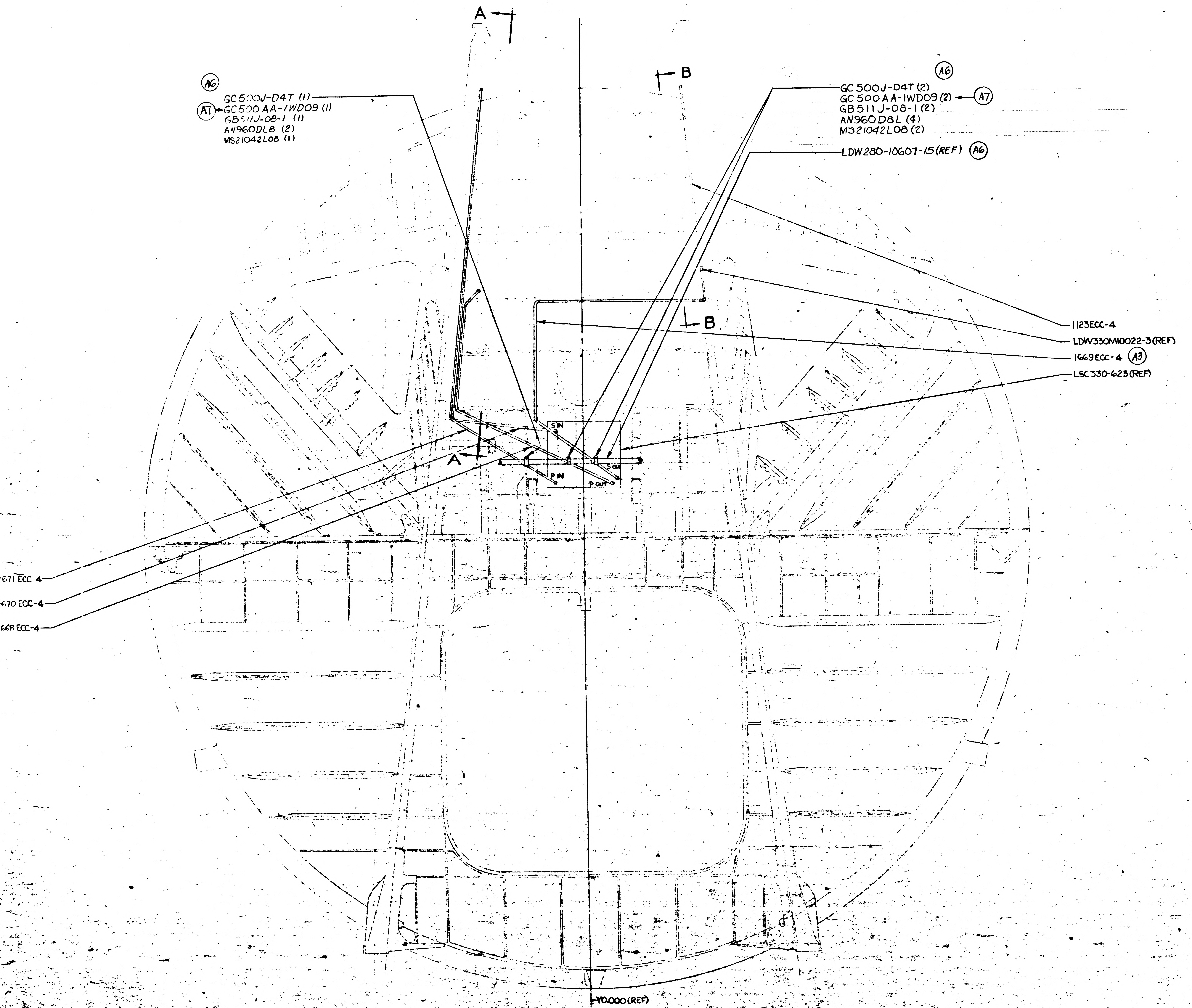
A
A
B
B
(A6)
GC500J-D4T (1)
(A7) GC500 AA-1WD09 (1)
GB511J-08-1 (1)
AN960DL8 (2)
MS21042L08 (1)
(A6)
GC500J-D4T (2)
GC500AA-1WD09 (2) (A7)
GB511J-08-1 (2)
AN960D8L (4)
MS21042L08 (2)
LDW280-10607-15 (REF) (A6)
1123ECC-4
LDW330M10022-3(REF)
1669ECC-4 (A3)
LSC330-623(REF)
S IN
S OUT
P IN
P OUT
671 ECC-4
670 ECC-4
668 ECC-4
Y0.000 (REF)

LDW280-52352-1 INSTL.
(VIEW LKG. AFT)

MANUFACTURING OPERATIONS UNLESS OTHERWISE SPECIFIED NOTES CHECKED √ APPLY TO THIS DWG.	
PART NUMBER AND ALL OTHER MARKINGS IN REGION MARKED ⊠ USE BOTH SIDES IF NECESSARY.	8
FILLET AND INSIDE CORNER RADII TOLERANCES .016R TO .062R ± .010 .063R TO .250R ± .015 OVER .250R ± .030	7
DEPTH SHOWN FOR TAPPED HOLES IS FULL THDS. 2-3 IMP THDS. BEYOND PERMISSIBLE.	
EXTERNAL THREAD LENGTH SHOWN INCLUDES 2 IMPERFECT THREADS MAX.	
DO NOT CADMIUM PLATE & PAINT HOLES OR SURFACES MARKED WITH DOUBLE ASTERISK.	
MISMATCH STEP OF ± .005 PERMISSIBLE DUE TO CHANGE OF CUTTERS AT INSIDE INTERSECTING SURFACES.	
DIAMETERS MARKED MUST BE CONCENTRIC WITHIN FULL INDICATOR READING	
HOLES MUST BE KEPT FREE OF CHROME PLATING SOLUTION.	
ALL DIMENSIONS SHOWN TO BE MET AFTER CADMIUM PLATING. THICKNESS OF PLATE .0003 MIN. TO .0005 MAX. MIN. THICKNESS TO BE .0002 ON THREADED AREAS. NO ALLOWANCE FOR PLATING IN HOLES	
125 √ SURFACE ROUGHNESS INCLUDING REAMED HOLES PER MIL-STD-10	
200 √ FOR ALL DRILLED HOLES	
REMOVE ALL BURRS. BREAK ALL EDGES .015-.031	
INSPECTION INFORMATION MINIMUM PERMISSIBLE AVERAGE EDGE DISTANCE MARKED IS	
SYMBOL ƒ DENOTES SURFACE TO BE MACHINED	
UNLESS OTHERWISE SPECIFIED TOLLRANCE ON FLANGES IS ± 1/32	
LENGTHS OF AN, NAS & MS AL ALY RIVETS SHORTER THAN 1 INCH ARE NOT SPECIFIED.	
TOLERANCE ON LOFTED DELINEATIONS IS	

DWG SIZE 34 X

03/03

NAS 9-1100

	GRUMMAN AIRCRAFT ENGRG CORP., BETHPAGE, L. I., NEW YORK			
LEM	SIZE J	CODE IDENT NO. 26512	LDW280-52352	A
MODEL OR END ITEM	SCALE 1/2 & NOTED		SHEET 5.00	

17 16 15 14 13 THIS IS AN ORIGINAL DRAWING

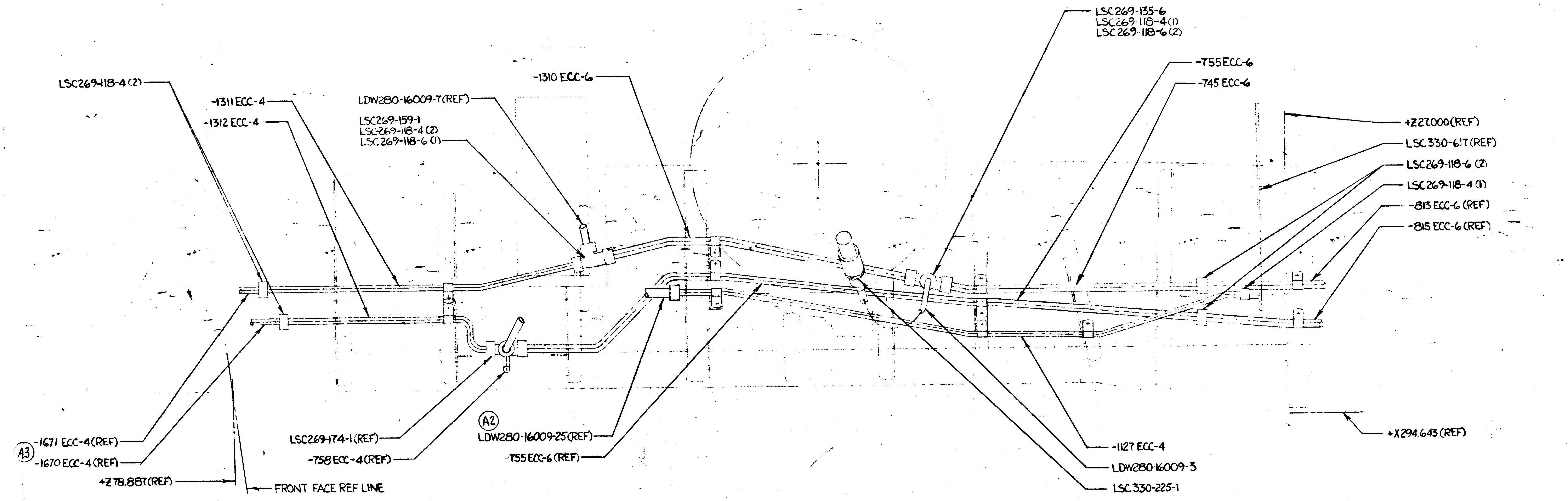
LSC269-118-4 (2)
-1311 ECC-4
-1312 ECC-4
LDW280-16009-7(REF)
LSC269-159-1
LSC269-118-4 (2)
LSC269-118-6 (1)
-1310 ECC-6
LSC269-135-6
LSC269-118-4(1)
LSC269-118-6(2)
-755ECC-6
-745 ECC-6
+Z27.000(REF)
LSC330-617(REF)
LSC269-118-6 (2)
LSC269-118-4 (1)
-813 ECC-6 (REF)
-815 ECC-6 (REF)
A3
-1671 ECC-4(REF)
-1670 ECC-4(REF)
+Z78.887(REF)
FRONT FACE REF LINE
LSC269-174-1(REF)
-758 ECC-4(REF)
A2
LDW280-16009-25(REF)
-755 ECC-6(REF)
+X294.643 (REF)
-1127 ECC-4
LDW280-16009-3
LSC330-225-1

LDW280-52352-1 INSTL
(VIEW LKG. OUTBD.-RH. SIDE)

LSC330-617 (REF

-754 ECC-4

-753 ECC-4

LDW330M10022-17

+Z27.000(RE

01/03 NAS 9-1100

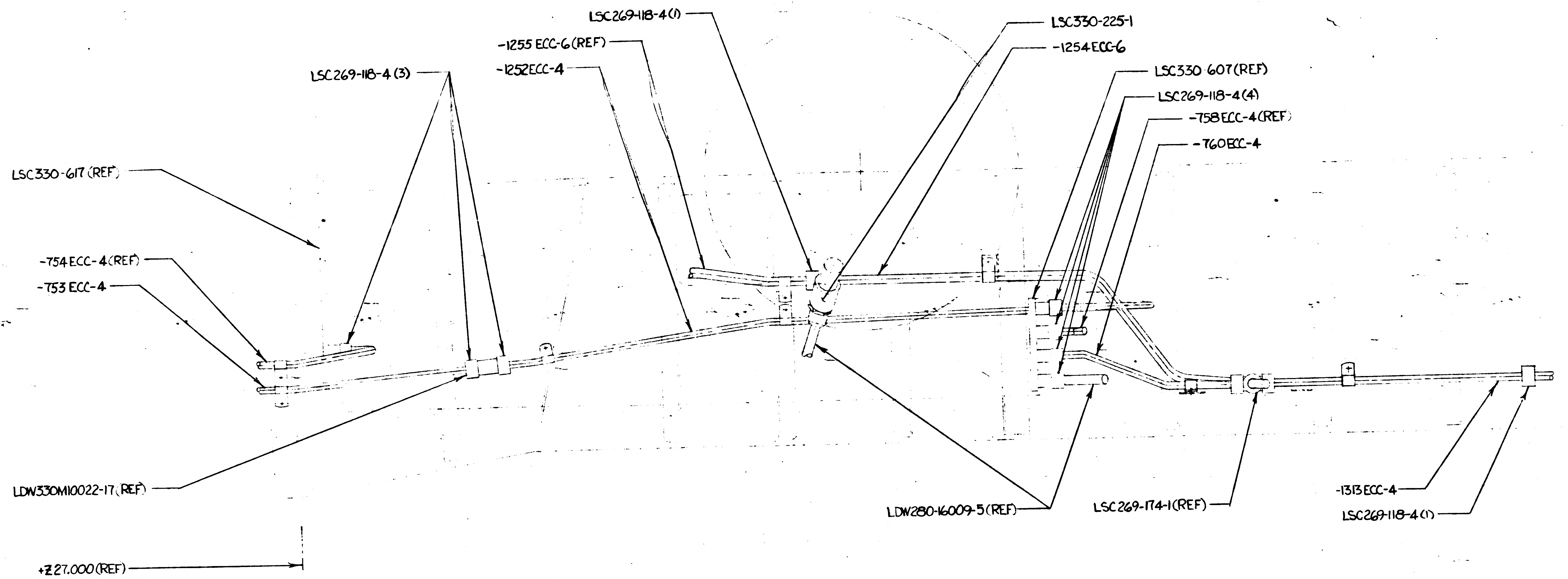
LSC269-118-4(1)
-1255 ECC-6(REF)
-1252ECC-4
LSC269-118-4 (3)
LSC330-617 (REF)
-754 ECC-4(REF)
-753 ECC-4
LDW330M10022-17(REF)
+Z27.000(REF)
LSC330-225-1
-1254ECC-6
LSC330 607(REF)
LSC269-118-4(4)
-758ECC-4(REF)
-760ECC-4
LDW280-16009-5(REF)
LSC269-174-1(REF)
-1313ECC-4
LSC269-118-4(1)

LDW280-52352-1 INSTL.
(VIEW LKS OUTBD. LH SIDE)

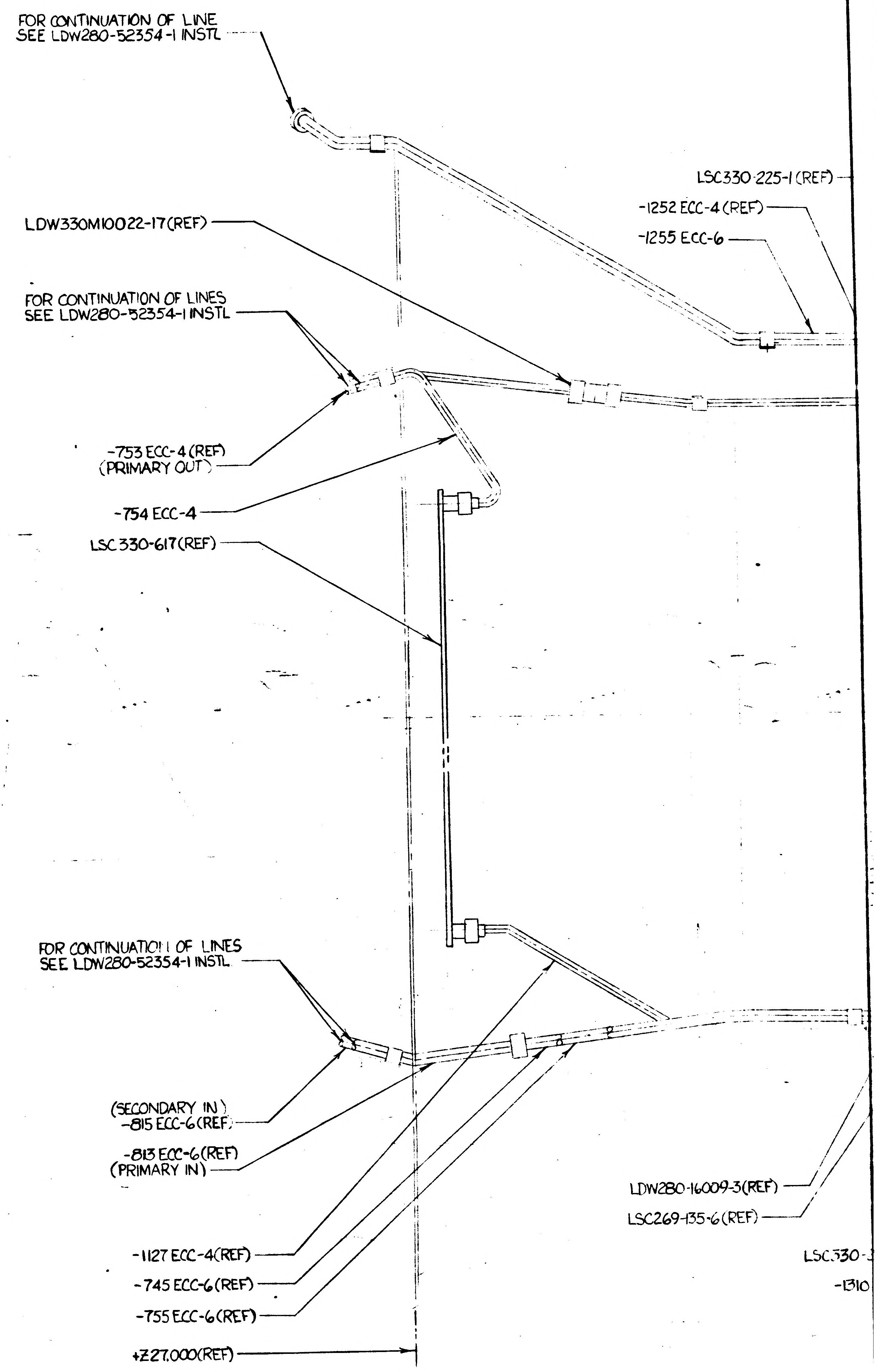
FOR CONTINUATION OF LINE
SEE LDW280-52354-1 INSTL
LSC330-225-1 (REF)
-1252 ECC-4 (REF)
-1255 ECC-6
LDW330M10022-17(REF)
FOR CONTINUATION OF LINES
SEE LDW280-52354-1 INSTL
-753 ECC-4 (REF)
(PRIMARY OUT)
-754 ECC-4
LSC330-617(REF)
FOR CONTINUATION OF LINES
SEE LDW280-52354-1 INSTL
(SECONDARY IN)
-815 ECC-6(REF)
-813 ECC-6(REF)
(PRIMARY IN)
-1127 ECC-4(REF)
-745 ECC-6(REF)
-755 ECC-6(REF)
+Z27.000(REF)
LDW280-16009-3(REF)
LSC269-135-6(REF)
LSC330-
-1310

02/03 NAS 9-1100

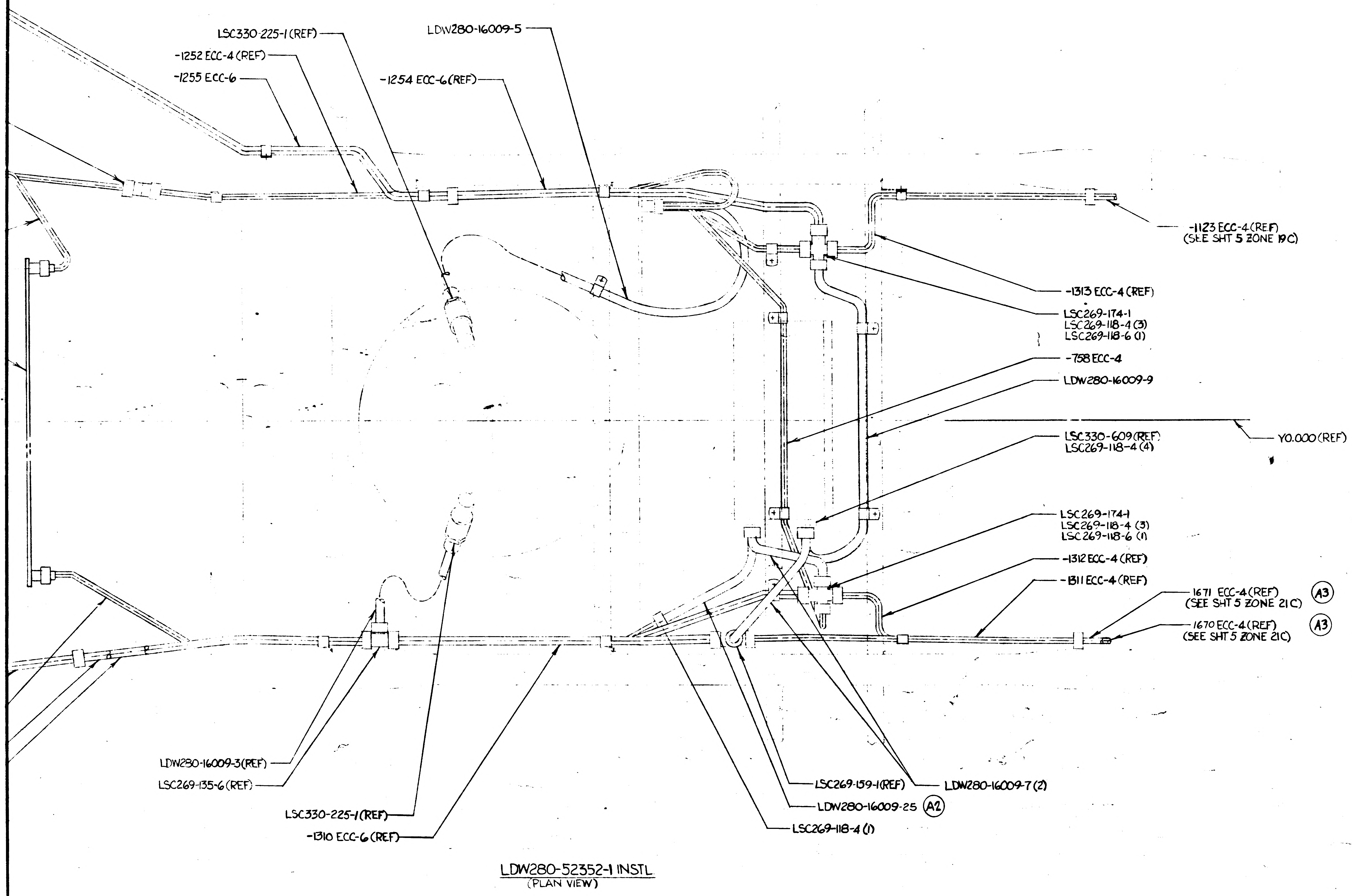
27
26
25
24
LSC330-225-1 (REF)
LDW280-16009-5
-1252 ECC-4 (REF)
-1255 ECC-6
-1254 ECC-6 (REF)
-1123 ECC-4 (REF)
(SEE SHT 5 ZONE 19C)
-1313 ECC-4 (REF)
LSC269-174-1
LSC269-118-4 (3)
LSC269-118-6 (1)
-758 ECC-4
LDW280-16009-9
LSC330-609 (REF)
LSC269-118-4 (4)
Y0.000 (REF)
LSC269-174-1
LSC269-118-4 (3)
LSC269-118-6 (1)
-1312 ECC-4 (REF)
-1311 ECC-4 (REF)
1671 ECC-4 (REF)
(SEE SHT 5 ZONE 21C)
A3
1670 ECC-4 (REF)
(SEE SHT 5 ZONE 21C)
A3
LDW280-16009-3 (REF)
LSC269-135-6 (REF)
LSC330-225-1 (REF)
-1310 ECC-6 (REF)
LSC269-159-1 (REF)
LDW280-16009-7 (2)
LDW280-16009-25
A2
LSC269-118-4 (1)

LDW280-52352-1 INSTL
(PLAN VIEW)

23

MANUFACTURING OPERATIONS UNLESS OTHERWISE SPECIFIED NOTES CHECKED √ APPLY TO THIS DWG.	
PART NUMBER AND ALL OTHER MARKINGS IN REGION MARKED ▭ USE BOTH SIDES IF NECESSARY.	
FILLET AND INSIDE CORNER RADII TOLERANCES .016R TO .062R ± .010 .063R TO .250R ± .015 OVER .250R ± .030	
DEPTH SHOWN FOR TAPPED HOLES IS FULL THDS. 2-3 IMP THDS. BEYOND PERMISSIBLE.	
EXTERNAL THREAD LENGTH SHOWN INCLUDES 2 IMPERFECT THREADS MAX.	
DO NOT CADMIUM PLATE & PAINT HOLES OR SURFACES MARKED WITH DOUBLE ASTERISK.	
MISMATCH STEP OF ± .005 PERMISSIBLE DUE TO CHANGE OF CUTTERS AT INSIDE INTERSECTING SURFACES.	
DIAMETERS MARKED MUST BE CONCENTRIC WITHIN FULL INDICATOR READING	
HOLES MUST BE KEPT FREE OF CHROME PLATING SOLUTION.	
ALL DIMENSIONS SHOWN TO BE MET AFTER CADMIUM PLATING. THICKNESS OF PLATE .0003 MIN. TO .0005 MAX. MIN. THICKNESS TO BE .0002 ON THREADED AREAS. NO ALLOWANCE FOR PLATING IN HOLES	
125√ SURFACE ROUGHNESS INCLUDING REAMED HOLES PER MIL-STD-10	
200√ FOR ALL DRILLED HOLES	
REMOVE ALL BURRS. BREAK ALL EDGES .015-.031	
INSPECTION INFORMATION MINIMUM PERMISSIBLE AVERAGE EDGE DISTANCE MARKED IS	
SYMBOL √ DENOTES SURFACE TO BE MACHINED	
UNLESS OTHERWISE SPECIFIED TOLERANCE ON FLANGES IS ± 1/32	
LENGTHS OF AN, NAS & MS AL ALY RIVETS SHORTER THAN 1 INCH ARE NOT SPECIFIED.	
TOLERANCE ON LOFTED DELINEATIONS IS	

03/03

NAS 9-1100

	GRUMMAN AIRCRAFT ENGRG CORP., BETHPAGE, L. I., NEW YORK			
LEM	SIZE J	CODE IDENT NO. 26512	LDW280-52352	A
MODEL OR ENG ITEM	SCALE 1/2		SHEET 6.00	

27 26 25 24 23

THIS IS AN ORIGINAL DRAWIN

ENG 32.1 REV 3-65

GRUMMAN AIRCRAFT ENGINEERING CORP.
CODE IDENT NO. 26512
ENGINEERING ORDER

DWG. NO. LEO 280-
EO NO. 314
CONTROL INFO NO. LDW280-A2087

ON SH 3 OF THE FOLLOWING DWGS

DWG No.-	CHG NO	DWG No.	CHG NO	DWG NO	CHG NO
✓ LDW280-52350	A2	LDW280-52354	A4	LDW280-52358	A1
✓ 52351	A2	-52355	A2	-52359	A3
✓ 52352	A1	-52356	A1	LDW 280-52360	A2
LDW 280-52353	A1	LDW280 - 52357	B2		

ADD THE FOLLOWING NOTE

ǂ SUBSTITUTION OF NAS1132V*, AN525-832R* OR AN525-832-* BOLTS FOR THE GB511J-08-* BOLT IS PERMISSIBLE

* USE NEXT AVAILABLE NUMBER.

THIS IS A RE-ISSUE
OF LEO 280-314 ~
INCOMPLETE CHANGE NO'S
ON ORIG ISSUE

(5)

DETAIL SPEC REQ		CL II ENGRG CHG		CL I ENGRG CHG	

REASON FOR EO: HARDWARE NOT AVAILABLE

DESCRIPTION OF EO: ON SH 3 ADDED NOTE ǂ (ǂ)

GAEC EO RELEASE: 10/17

MODEL	EFFECTIVITY PROCURING ACTIVITY NO.	GAEC UNIT NO.	SUB CONTR UNIT NO.
LM		LM-2 (32)	

DRAWING CHANGE REQD		DISPOSITION OF PARTS		APPROVED BY							
✓		NOT	REQD	✓ DATE	JW 10-14-66	—	—	—	EW 10-12		10-12-66 10/15/66
REVISE DWG	RECORD EO	REWORK	SCRAP		VDI	SUPPORT	RELIAB. GROUP	GROUP LEADER	STRESS GROUP	LIAISON ENGRG	PROJ ENGRG

PRIORITY	DRAWING TITLE	DRAWING NO	EO NO.
C	LINES INSTALLATIONS	LEO - 280-	314

ISSUED BY C.H. COHEN X7033 SECTION EQUIP LINES (VDI) GROUP NO. 332 PL 35

ENG 32.1 REV 3-66

GRUMMAN AIRCRAFT ENGINEERING CORP.
CODE IDENT NO. 26512
ENGINEERING ORDER

DWG NO LDW280-52352		EO NO. A2
CONTROL INFO NO. LDW280A-3628		

REMOVE LDW280-16009-15 FROM -1 INSTL. (ZONES 25A & 34B) & REPLACE WITH LDW280-16009-25 ON -1 INSTL.

REWORK NOTE: NO PICTURE CHANGE ON DWG. REQD.

DETAIL SPEC REQ		CL II ENGRG CHG		CL I ENGRG CHG		LAV307-379 3

REASON FOR EO INSTL. LONGER FLEX HOSE TO FACILITATE HOOK-UP OF ABORT SENSOR COLD PLATE (MOCKUP WAS INCORRECT)	DESCRIPTION OF EO ON -1 REMOVED LDW280-16009-15(1) & ADDED LDW280-16009-25(1)	GAEC EO RELEASE C FR 11/23/66

MODEL	EFFECTIVITY			DRAWING CHANGE REQD		DISPOSITION OF PARTS		APPROVED BY								
	PROCURING ACTIVITY NO.	GAEC UNIT NO.	SUB CONTR UNIT NO.	✓		✓		DATE	11/22/66	—	—	—	BW 11-23		RMC 11-23-66	Bott 11-23-66
LM		LM-2(32)		REVISE DWG	RECORD EO	REWORK	SCRAP	1	YD1	SUPPORT	RELIAB. GROUP	GROUP LEADER	STRESS GROUP	LIAISON ENGRG	PROJ ENGRG	
				PRIORITY C		DRAWING TITLE LINES INSTL. - ECS - CABIN						DRAWING NO. LDW280-52352				EO NO. A2

ISSUED BY BIDONDE X7033 SECTION VD1 (EQUIP. LINES) GROUP NO. 332 PL 35

01 NAS 9-1100

4087 4088 4089

B

GRUMMAN AIRCRAFT ENGINEERING CORP.
CODE IDENT NO. 26512
ENGINEERING ORDER

DWG NO. LDW280-52352
EO NO. A3
CONTROL INFO NO. LDW280A-4089

ON-1:
DELETE -764 ECC-4 & ADD -1668 ECC-4 AS REPLACEMENT (SHT 5 ZONE 16 B).
DELETE -1124 ECC-4 & ADD -1669 ECC-4 " " " "
DELETE -1128 ECC-4 & ADD -1670 ECC-4 " " " "
DELETE -1129 ECC-4 & ADD -1671 ECC-4 " " " "
DELETE -1089 ECC-4 & ADD -1711 ECC-4 " " (SHT 6 ZONE 24 A)

REWORK NOTE: NO PICTURE CHANGE TO DWG. REQD.

(5)

DETAIL SPEC REQ ☐ CL II ENGRG CHG ☐ CL I ENGRG CHG ☐

REASON FOR EO: HEAT SHIELD INTERFERENCE AT TRACKING LIGHT COLD PLATE - F/F

DESCRIPTION OF EO: ON-1: DELETED -764, -1124, -1128 & -1129 ECC-4. & -1089 ECC-4 ADDED -1668, -1669, -1670 & -1671 ECC-4, -1711 ECC-4

GAEC C EO RELEASE: VE 1/19/67

MODEL	EFFECTIVITY: PROCURING ACTIVITY NO.	GAEC UNIT NO.	SUB CONTR UNIT NO.
LM		LM-2(32)	

DRAWING CHANGE REQD: REVISE DWG	RECORD EO	DISPOSITION OF PARTS: REWORK	SCRAP
✓			✓

APPROVED BY		—	—	—	CW			
DATE	1/12/67				1/12/67		1/16/67	1/16/67
1	VD1	SUPPORT	RELIAB. GROUP	GROUP LEADER	STRESS GROUP	LIAISON ENGRG	PROJ ENGRG	~~CUST~~

PRIORITY	DRAWING TITLE	DRAWING NO.	EO NO.
C	LINES INSTL. - ECS - CABIN	LDW280-52352	A3

ISSUED BY BIDONDE X7033 SECTION VD1 (EQUIP. LINES) GROUP NO. 332 PL 35

01

NAS 9-1100

B
ENG 32.2 REV 3-65

GRUMMAN AIRCRAFT ENGINEERING CORP.
CODE IDENT NO. 26512
ENGINEERING ORDER *

DWG. NO. LDW 280-52352	EO NO. A4
CONTROL INFO NO. LDW 280A 7831	

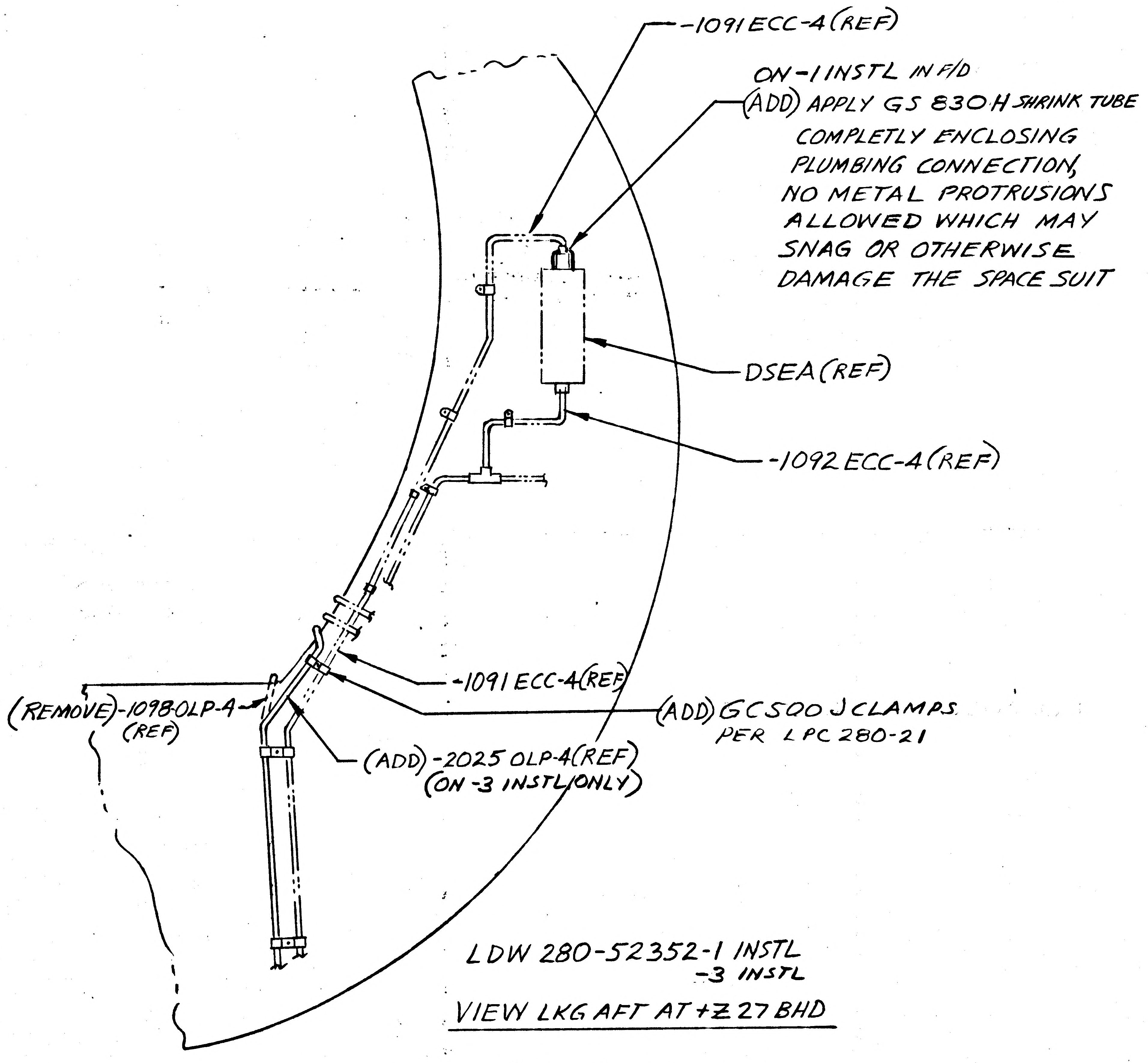

-1091 ECC-4 (REF)
ON-1 INSTL IN F/D
(ADD) APPLY GS 830 H SHRINK TUBE COMPLETLY ENCLOSING PLUMBING CONNECTION, NO METAL PROTRUSIONS ALLOWED WHICH MAY SNAG OR OTHERWISE DAMAGE THE SPACE SUIT
DSEA (REF)
-1092 ECC-4 (REF)
-1091 ECC-4 (REF)
(ADD) GC500 J CLAMPS PER LPC 280-21
(REMOVE) -1098 OLP-4 (REF)
(ADD) -2025 OLP-4 (REF) (ON -3 INSTL ONLY)

LDW 280-52352-1 INSTL
-3 INSTL

VIEW LKG AFT AT +Z 27 BHD

NOTE: ALL LINE DASH NO'S ARE DASH NO'S OF LDW 280-16000
ON -1 INSTL IN B/M (ADD) GS830H SHRINK TUBING (AS REQD)

DETAIL SPEC REQ		CL II ENGRG CHG	✓	CL I ENGRG CHG		LCD 1552							
REASON FOR EO CORRECTION OF EQUIPMENT PHYSICAL HAZARDS						DESCRIPTION OF EO ON-3 INSTL IN F/D -2025 OLP-4 (REF) (WAS) -1098 OLP-4 (REF) ADDED PICTURE OF CLAMPS AND NOTE: APPLY GS830H SHRINK TUBING --- SPACESUIT. ON-1 INST IN B/M ADDED GS830H - AS REQD							Ⓡ GAEC C EO RELEASE 7-14
MODEL	EFFECTIVITY					DRAWING CHANGE REQD		DISPOSITION OF PARTS		APPROVED BY			
	PROCURING ACTIVITY NO.	GAEC UNIT NO.	SUB CONTR UNIT NO.							DATE	7/11/67 VDI	7/11/67 MATL	RELIAB. GROUP
LM		LM-2 (32)				✓ REVISE DWG	RECORD EO	✓ REWORK	SCRAP				

APPROVED BY / DATE	7/10/67 GROUP LEADER	7-11 STRESS GROUP	LIAISON ENGRG	7/11/67 PROJ ENGRG	7-14-67 ~~GOVT~~	
PRIORITY C	DRAWING TITLE LINES INSTL - ENVIRONMENTAL CONTL - CABIN			DRAWING NO. LDW 280-52352		EO NO. A4

ISSUED BY L. BALDASSIN X1153 SECTION EQUIP LINES GROUP NO. 332 PL 25

01
NAS 9-1100

01

NAS 9-1100

ENG 32.2 REV 3-65

B

GRUMMAN AIRCRAFT ENGINEERING CORP.
CODE IDENT NO. 26512
ENGINEERING ORDER

DWG. NO. LE0280

EO NO. 708

CONTROL INFO NO. LDW280A9103

ADD THE FOLLOWING NOTE * TO THE DRAWINGS LISTED BELOW:

* BONDING TO BE INACCORDANCE WITH LSP390-001

(* = USE NEXT AVAILABLE NOTE NUMBER)

DRAWING NUMBER	EFFECTIVITY	CHANGE NUMBER
LDW280 - 28363	LM-2(32) THRU LM-15(45)	B2
- 51365	LM-2(32) THRU LM-15(45)	A8
- 51368	LM-2(32)	A9
- 51369	LM-2(32), LM-3(33)	A3
- 52350	LM-2(32)	D7
- 52352		A5
- 52353		B2
- 52355		C1
- 52364		B6
- 52609	LM-2(32)	A5
- 53352	LM-3(33)	A9
- 53353	LM-3(33)	B5
- 53355	LM-3(33)	A7
- 53364	LM-3(33) THRU LM-15(45)	B7
- 53368	LM-3(33)	B7
- 53609	LM-3(33)	A7
- 54352	LM-4(34) THRU LM-15(45)	B6
- 54353		B2
- 54355		B5
LDW280 - 54609	LM-4(34) THRU LM-15(45)	B7

DETAIL SPEC REQ	☐	CL II ENGRG CHG	☐	CL I ENGRG CHG	☑ LCD 1961

5

REASON FOR EO: TO UPDATE INSTL DWGS TO CURRENT BONDING REQUIREMENTS

DESCRIPTION OF EO: ADDED NOTE *

GAEC C EO RELEASE: 9/12/67

MODEL	EFFECTIVITY: PROCURING ACTIVITY NO.	GAEC UNIT NO.	SUB CONTR UNIT NO.
LM		NOTED	

DRAWING CHANGE REQD: REVISE DWG ✓ RECORD EO

DISPOSITION OF PARTS: NOT REQD REWORK SCRAP

	VDI	SUPPORT	RELIAB. GROUP	GROUP LEADER	STRESS GROUP	LIAISON ENGRG	PROJ ENGRG	
APPROVED BY								
DATE	9/6/67			9/8/67	9/9/67		9/11/67	9-12-67

PRIORITY: C

DRAWING TITLE: INSTL LINES ELECTRONIC & PIPING ASCENT STAGE & DESCENT STAGE

DRAWING NO. LEO 280

EO NO. 708

9-14-67
ISSUED BY J. DeVITA X1153 (9-7-67)

SECTION EQUIP LINES (VDI)

GROUP NO. 332

PL 25

GRUMMAN AIRCRAFT ENGINEERING CORP.
CODE IDENT NO. 26512
ENGINEERING ORDER
ENG 32.1 REV 3-65

DWG. NO. LDW 280-52352
EO NO. A7
CONTROL INFO NO. LM-5-17001

THIS IS A REVISION OF EO A6

GC500J-D9T(1) S/B GC500AA-1WD09(1)
GC500J-D9T(2) S/B GC500AA-1WD09(2)

RELEASED BY LIAISON

DETAIL SPEC REQ ☐ CL II ENGRG CHG ☑ CL I ENGRG CHG ☐

REASON FOR EO: GC500J-D9T NOT AVAILABLE

DESCRIPTION OF EO: ON-1 GC500AA-1WD09(3) WAS GC500J-D9T(3)

GAEC EO RELEASE: 5 (32) 05

MODEL	PROCURING ACTIVITY NO.	GAEC UNIT NO.	SUB CONTR UNIT NO.
LM		LM-2(32)	

DRAWING CHANGE REQD: REVISE DWG ✓ RECORD EO

DISPOSITION OF PARTS: REWORK ✓ SCRAP

	APPROVED BY	SUPPORT	RELIAB. GROUP	GROUP LEADER	STRESS GROUP	LIAISON EN	PROJ ENGRG	~~GOVT~~
				—	JFJ	CH	WPB	
DATE	9/26/67 VDI 9/28/67			—	9-26-67	9-26-67	9/28/67	9/26/67

PRIORITY: C
DRAWING TITLE: LINES INSTL-ECS-A/S CABIN
DRAWING NO. LDW280-52352
EO NO. A7

ISSUED BY LIAISON T. WALSH SECTION EQUIP LINES GROUP NO. 332 PL 5

01

NAS 9-1100

GRUMMAN AIRCRAFT ENGINEERING CORP.
CODE IDENT NO. 26512
ENGINEERING ORDER

ENG 32.1 REV 3-65

DWG. NO. LDW280-52352		EO NO.	A8
CONTROL INFO NO.	LDW280A-9975		

THIS IS A REVISON OF EO A-4

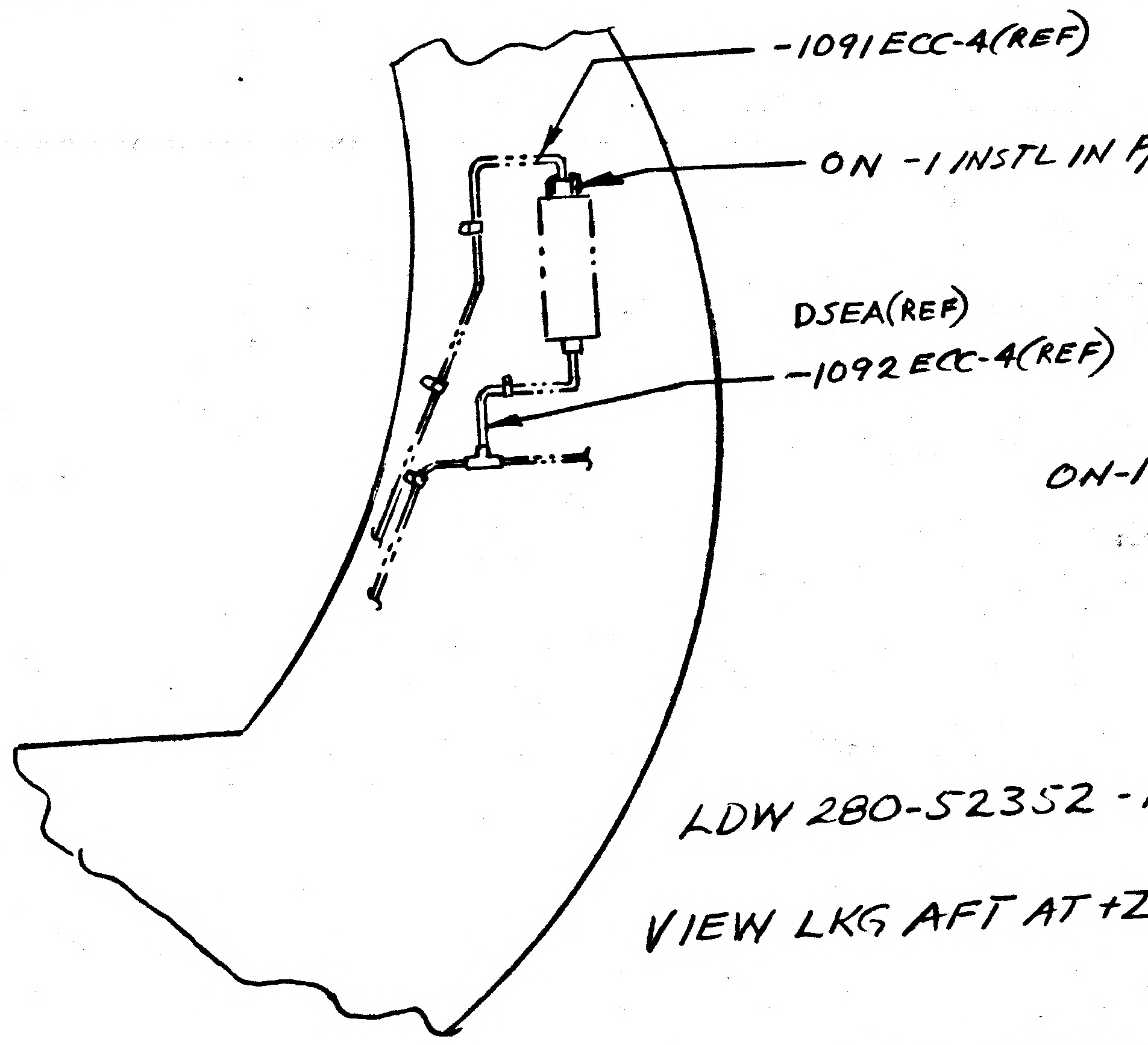

(REMOVE) GS830H SHRINK TUBE COMPLETELY ENCLOSING PLUMBINC CONNECTION. NO METAL PROTRUSIONS ALLOWED WHICH MAY SNAG OR OTHERWISE DAMAGE THE SPACE SUIT

ON-1 INSTL IN B/M (REMOVE) GS830H SHRINK TUBE (QTY) AS REQD

LDW 280-52352 -1 INSTL

VIEW LKG AFT AT +Z 27 BHD

DETAIL SPEC REQ		CL II ENGRG CHG		CL I ENGRG CHG	✓ LCD 2223 CCA 745

REASON FOR EO	DESCRIPTION OF EO
SHRINK TUBE NOT REQD	ON -1 INSTL IN F/D & B/M REMOVED GS830H SHRINK TUBE & NOTE: COMPLETELY ENCLOSING PLUMBING CONNECTION. NO METAL PROTRUSIONS ALLOWED WHICH MAY SNAG OR OTHERWISE DAMAGE THE SUIT.

Ⓡ GAEC EO RELEASE 5 C JK 10/27/67

EFFECTIVITY			
MODEL	PROCURING ACTIVITY NO.	GAEC UNIT NO.	SUB CONTR UNIT NO.
LM		LM 2(32)	

DRAWING CHANGE REQD		DISPOSITION OF PARTS										
				APPROVED BY								
				DATE	10/23/67				10/23/67	10-23	10/24/67	10-27-67
✓ REVISE DWG	RECORD EO	✓ REWORK	SCRAP	E	VDI	SUPPORT	RELIAB. GROUP		GROUP LEADER	STRESS GROUP	LIAISON ENGRG	PROJ ENGRG

PRIORITY	DRAWING TITLE	DRAWING NO.	EO NO.
C	LINES INSTL - ENVIRONMENTAL CONTL - CABIN	LDW280-52352	A8

10/28
ISSUED BY L. BALDASSIN x 1392

SECTION EQUIP LINES

GROUP NO. 332

PL 25

0 1

NAS 9-1100

GRUMMAN AIRCRAFT ENGINEERING CORP.
CODE IDENT NO. 26512
ENGINEERING ORDER

ENG 32.1 REV 3-65

DWG. NO. LED 280
EO NO. 770
CONTROL INFO NO. LDW280B0077

PARTIAL CANCELLATION

THIS EO CANCELS CHANGES LISTED ON LEO280-708 FOR THE FOLLOWING DRAWINGS: ONLY

CANCELLED CHANGE NO.	DRAWING NUMBER	EFFECTIVITY	CANCELLING CHANGE NO.
A5	LDW280-52352	LM-2(32)	A9
A5	-52609	LM-2(32)	A7
A8	-51365	LM-2(32) THRU LM-15(45)	B1
B6	-52364	LM-2(32)	B7
A9	-51368	LM-2(32)	B1
A3	LDW280-51369	LM-2(32), LM-3(33)	A4

DETAIL SPEC REQ ☐ CL II ENGRG CHG ☐ CL I ENGRG CHG ✓ LCD 1961

5

REASON FOR EO: BONDING NOTE NOT REQD

DESCRIPTION OF EO: CANCELS NOTED CHG ON LEO280-708.

GAEC C. EO RELEASE

MODEL	EFFECTIVITY: PROCURING ACTIVITY NO.	GAEC UNIT NO.	SUB CONTR UNIT NO.
LM		NOTED	

DRAWING CHANGE REQD: REVISE DWG ✓ RECORD EO

DISPOSITION OF PARTS: REWORK ✓ SCRAP

	APPROVED BY	SUPPORT	RELIAB. GROUP	GROUP LEADER	STRESS GROUP	LIAISON ENGRG	PROJ ENGRG	~~GOVT.~~
DATE	10/26/67			10/26/67	10/27/67		10/28/67	10/30/67
E	VDI							

PRIORITY: C

DRAWING TITLE: LINES INSTL PIPING-ASCENT STAGE & DESCENT STAGE

DRAWING NO. LEO 280

EO NO. 770

ISSUED BY J. DeVITA X1153 (10-25-67) 11-2-67

SECTION EQUIP LINES (VDI) GROUP NO. 332 PL 25

01

NAS 9-1100

QTY PER ASSEMBLY							CODE IDENT	PART NO.	I&T	NOMENCLATURE OR DESCRIPTION	MATERIAL	GOVT SPEC	COML SPEC	STOCK SIZE	PROCESS SYM	FINISH NO.	ZONE
C.I.			-7	-5	-3	-1											
								LDW 280-16000									
N			1					-1317 ECW-4	E	TUBE ASSY	SEE DWG						
			1					-1316 OLP-4									
						1		-1113 ECC-6									
						1		-1112 ECC-6									
						1		-1111 ECC-6									
						1		-1110 ECC-6									
					1			-2025 OLP-4									
			1					-1315 OLP-4									
			1					-1314 ECW-4									
						1		-1047 ECC-6									
						1		-1046 ECC-4									
						1		-1045 ECC-4									
						1		-924 ECC-4									
						1		-923 ECC-4									
						1		-922 ECC-4									
						1		-921 ECC-4									
						1		-920 ECC-4									
						1		-919 ECC-4									
						1		-918 ECC-4									
						1		-917 ECC-4									
						1		-916 ECC-4									
						1		-915 ECC-4									
						1		-914 ECC-4									
						1		-913 ECC-4									
						1		-912 ECC-4									
						1		-911 ECC-4									
						1		-909 ECC-4									
						1		-908 ECC-4									
N						1		-907 ECC-4	E	TUBE ASSY	SEE DWG						
								LDW 280-16000									

SYM OR NO.	PROCESS OR FINISH	GRUMMAN SPEC OR MILITARY SPEC	SYM OR NO.	PROCESS OR FINISH	GRUMMAN SPEC OR MILITARY SPEC	SYM OR NO.	PROCESS OR FINISH	GRUMMAN SPEC OR MILITARY SPEC

I & T: IDENTIFICATION AND TRACEABILITY IN ACCORDANCE WITH : NONE

GRUMMAN AIRCRAFT ENGRG CORP, BETHPAGE, L. I., NEW YORK

SIZE	CODE IDENT NO.		
B	26512	LDW280-52353	B
SCALE NONE			SHEET 2.03

ENG 77.2 7-65

01

NAS 9-1100

ZL			-7	-5	-3	-1	CODE IDENT	PART NO.	I&T	NOMENCLATURE OR DESCRIPTION	MATERIAL	GOVT SPEC	COML SPEC	STOCK SIZE	PROCESS SYM	FINISH NO.	ZONE
								LDW280-16000									
N			1			1		-781 ECC-6	E	TUBE ASSY	SEE DWG						
						1		-1949 ECW-4									
					1			-1441 OLP-4									
						1		-1245 ECC-6									
			1					-1151 ECW-4									
					1			-1167 OLP-5									
				1				-1165 ECC-6									
						1		-1164 ECW-4									
						1		-1163 ECW-4									
						1		-1162 ECC-6									
						1		-1161 OLP-4									
						1		-1160 ECC-6									
						1		-1154 ECC-4									
N						1		-1153 ECW-4	E	TUBE ASSY	SEE DWG						
								LDW280-16000									

QTY PER ASSEMBLY

SYM OR NO.	PROCESS OR FINISH	GRUMMAN SPEC OR MILITARY SPEC	SYM OR NO.	PROCESS OR FINISH	GRUMMAN SPEC OR MILITARY SPEC	SYM OR NO.	PROCESS OR FINISH	GRUMMAN SPEC OR MILITARY SPEC

I & T: IDENTIFICATION AND TRACEABILITY IN ACCORDANCE WITH: NONE

GRUMMAN AIRCRAFT ENGRG CORP, BETHPAGE, L. I., NEW YORK

SIZE	CODE IDENT NO.		
B	26512	LDW280-52353	B

SCALE NONE

SHEET 2.04

ENG 77.2 7-65

01

NAS 9-1100

CL			-7	-5	-3	-1	CODE IDENT	PART NO.	I&T	NOMENCLATURE OR DESCRIPTION	MATERIAL	GOVT SPEC	COML SPEC	STOCK SIZE	PROCESS SYM	FINISH NO.	ZONE
C				1				LDW280-16079-1	E	CLAMP	SEE DWG						
N						1		LDW330M10022-15	E	RESTRICTOR	SEE DWG						
			2					LSC 269-148-4		ADAPTER		SEE NOTE 6					
						1		-173-1		TEE REDUCER							
						1		-159-1		TEE REDUCER							
						2		-145-6		CROSS							
						2		-137-6		TEE REDUCER							
						3		-135-6		TEE REDUCER							
						1		-133-6		TEE							
						1		-133-4		TEE							
				1		5		-131-6		TEE							
			5			3		-131-4		TEE							
						6		-124-6		UNION							
					1			-124-5		UNION							
						7		-124-4		UNION							
						11		-119-6		NUT							
					1			-119-5		NUT							
						8		-119-4		NUT							
				18		68		-118-6		SEAL							
					1			-118-5		SEAL							
N			2		4	110		LSC 269 -118-4	E	SEAL	SEE DWG	SEE NOTE 6					

QTY PER ASSEMBLY

SYM OR NO.	PROCESS OR FINISH	GRUMMAN SPEC OR MILITARY SPEC	SYM OR NO.	PROCESS OR FINISH	GRUMMAN SPEC OR MILITARY SPEC	SYM OR NO.	PROCESS OR FINISH	GRUMMAN SPEC OR MILITARY SPEC

I & T: IDENTIFICATION AND TRACEABILITY IN ACCORDANCE WITH : NONE

GRUMMAN AIRCRAFT ENGRG CORP, BETHPAGE, L. I., NEW YORK

SIZE	CODE IDENT NO.		
B	26512	LDW280-52353	B

SCALE NONE

SHEET 2.05

ENG 77.2 7-65

01

NAS 9-1100

CL			-7	-5	-3	-1	CODE IDENT	PART NO.	I&T	NOMENCLATURE OR DESCRIPTION	MATERIAL	GOVT SPEC	COML SPEC	STOCK SIZE	PROCESS SYM	FINISH NO.	ZONE
C						1		NAS 43 DD3-32	E	SPACER	STD PART						
						3		NAS 43 DD3-24		SPACER							
						5		NAS 43 DD3-20		SPACER							
					2	4		NAS 43 DD3-16		SPACER							
			5					MS 21919 DH2		CLAMP							
			2		1	13		MS 21042 L08		NUT	STD PART						
			AS REQD		AS REQD	AS REQD		MS 20995 F32		LOCKWIRE	STD PART						
						11		AN 960 D1216L		WASHER	STD PART						
						1		AN 960 D1016L		WASHER							
						8		AN 960 D916L		WASHER							
			16	8	4	196		AN 960 D8L		WASHER	STD PART						
				8		101		GC500J-D6T		CLAMP	GRUM STD						
					2			GC500J-D5T		CLAMP							
					5	80		GC500J-D4T		CLAMP							
						4		GB511J-08-6		SCREW							
				2				GB511J-08-14		SCREW							
						1		GB511J-08-4									
						6		GB511J-08-9									
						9		GB511J-08-7									
						5		GB511J-08-5									
				2		3		GB511J-08-2									
			16	4	4	158		GB511J-08-1		SCREW	GRUM STD						
						10		LSC269-199-1019		SEAL	SEE DWG	NOTE 6					
						1		LSC269-199-1017		SEAL	SEE DWG	NOTE 6					
C						7		LSC269-199-1016	E	SEAL	SEE DWG	NOTE 6					
C			1					LSC269-199-1011	E	SEAL	SEE DWG	NOTE 6					

QTY PER ASSEMBLY

SYM OR NO.	PROCESS OR FINISH	GRUMMAN SPEC OR MILITARY SPEC	SYM OR NO.	PROCESS OR FINISH	GRUMMAN SPEC OR MILITARY SPEC	SYM OR NO.	PROCESS OR FINISH	GRUMMAN SPEC OR MILITARY SPEC

I & T: IDENTIFICATION AND TRACEABILITY IN ACCORDANCE WITH : NONE

GRUMMAN AIRCRAFT ENGRG CORP, BETHPAGE, L. I., NEW YORK

SIZE	CODE IDENT NO.		
B	26512	LDW280-52353	B
SCALE NONE			SHEET 2.06

ENG 77.2 7-65

01

NAS 9-1100

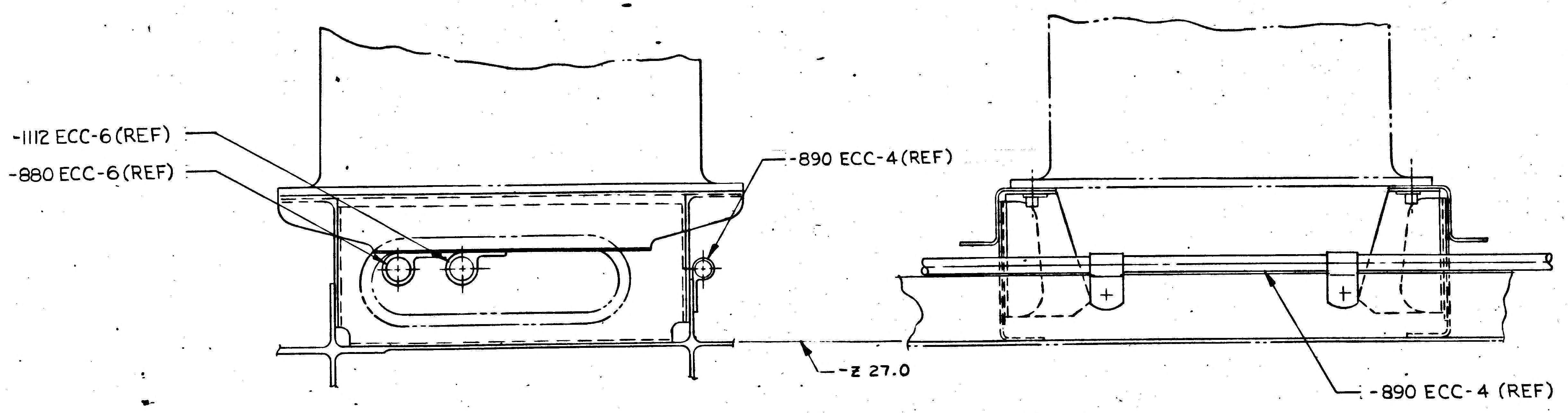

-1112 ECC-6 (REF)
-880 ECC-6 (REF)
-890 ECC-4 (REF)
-Z 27.0
-890 ECC-4 (REF)

VIEW C-C
FULL SCALE

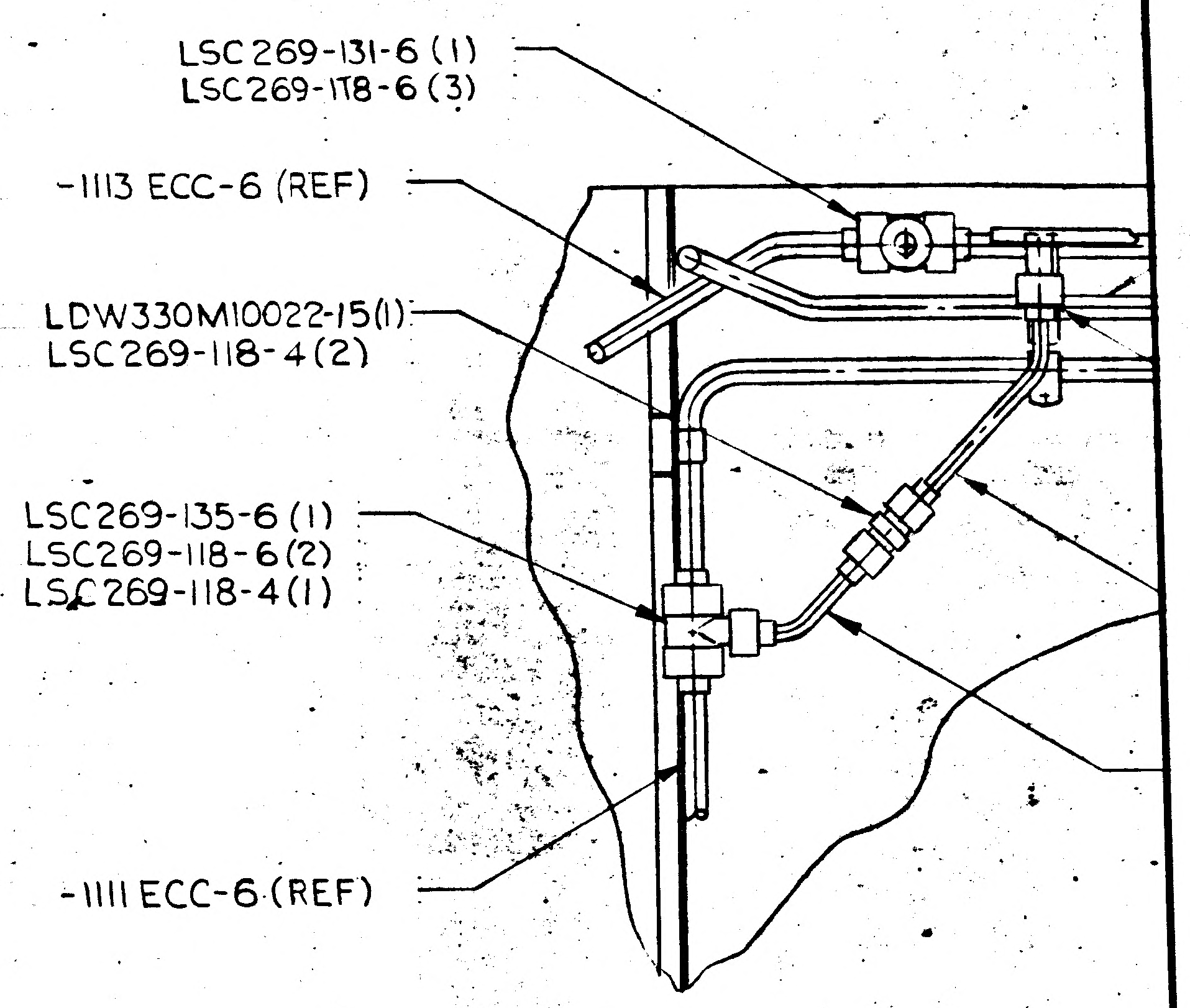

LSC269-131-6 (1)
LSC269-118-6 (3)
-1113 ECC-6 (REF)
LDW330M10022-15(1)
LSC269-118-4 (2)
LSC269-135-6 (1)
LSC269-118-6 (2)
LSC269-118-4 (1)
-1111 ECC-6 (REF)

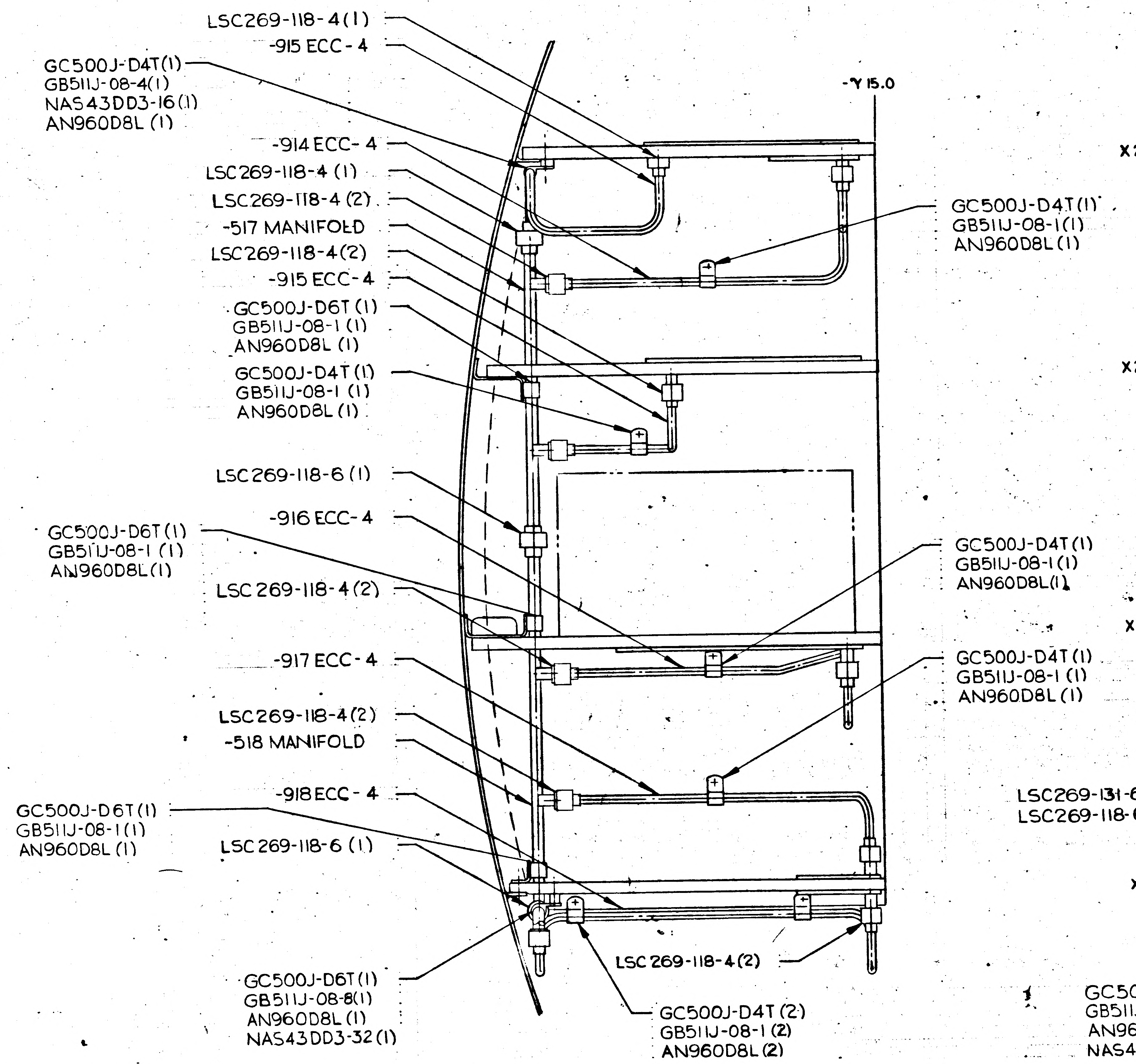

LSC269-118-4 (1)
-915 ECC-4
GC500J-D4T(1)
GB511J-08-4(1)
NAS43DD3-16(1)
AN960D8L (1)
-Y 15.0
-914 ECC-4
LSC269-118-4 (1)
LSC269-118-4 (2)
-517 MANIFOLD
LSC269-118-4 (2)
-915 ECC-4
GC500J-D6T (1)
GB511J-08-1 (1)
AN960D8L (1)
GC500J-D4T (1)
GB511J-08-1 (1)
AN960D8L (1)
GC500J-D4T (1)
GB511J-08-1 (1)
AN960D8L (1)
LSC269-118-6 (1)
-916 ECC-4
GC500J-D6T (1)
GB511J-08-1 (1)
AN960D8L (1)
LSC269-118-4 (2)
GC500J-D4T (1)
GB511J-08-1 (1)
AN960D8L (1)
-917 ECC-4
GC500J-D4T (1)
GB511J-08-1 (1)
AN960D8L (1)
LSC269-118-4 (2)
-518 MANIFOLD
-918 ECC-4
GC500J-D6T (1)
GB511J-08-1 (1)
AN960D8L (1)
LSC269-118-6 (1)
LSC269-118-4 (2)
GC500J-D6T (1)
GB511J-08-8 (1)
AN960D8L (1)
NAS43DD3-32 (1)
GC500J-D4T (2)
GB511J-08-1 (2)
AN960D8L (2)

SECTION K-K
HALF SCALE

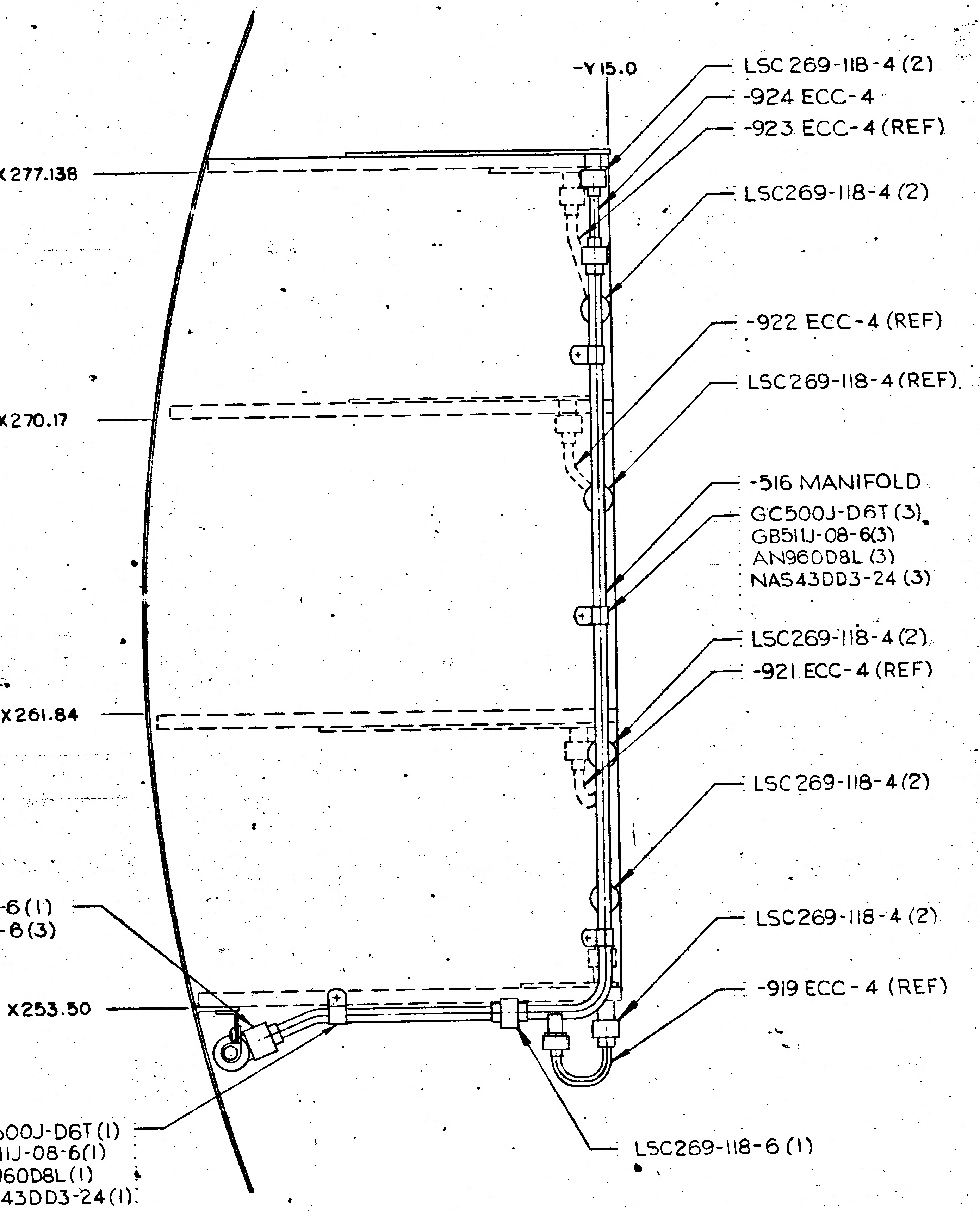

X 277.138
X 270.17
X 261.84
X 253.50
LSC269-131-6 (1)
LSC269-118-8 (3)
-Y 15.0
LSC269-118-4 (2)
-924 ECC-4
-923 ECC-4 (REF)
LSC269-118-4 (2)
-922 ECC-4 (REF)
LSC269-118-4 (REF)
-516 MANIFOLD
GC500J-D6T (3)
GB511J-08-6(3)
AN960D8L (3)
NAS43DD3-24 (3)
LSC269-118-4 (2)
-921 ECC-4 (REF)
LSC269-118-4 (2)
LSC269-118-4 (2)
-919 ECC-4 (REF)
GC500J-D6T (1)
GB511J-08-6 (1)
AN960D8L (1)
NAS43DD3-24 (1)
LSC269-118-6 (1)

SECTION J-J
HALF SCALE

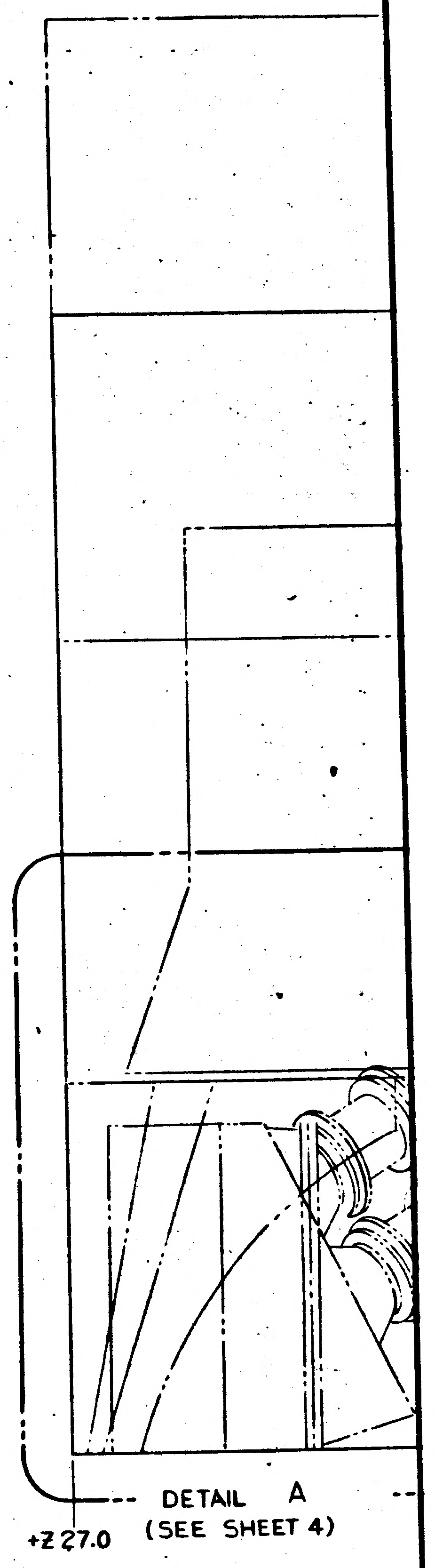

DETAIL A
(SEE SHEET 4)
+Z 27.0

VIEW LK

01/03

NAS 9-1100

8 7 6 5 4

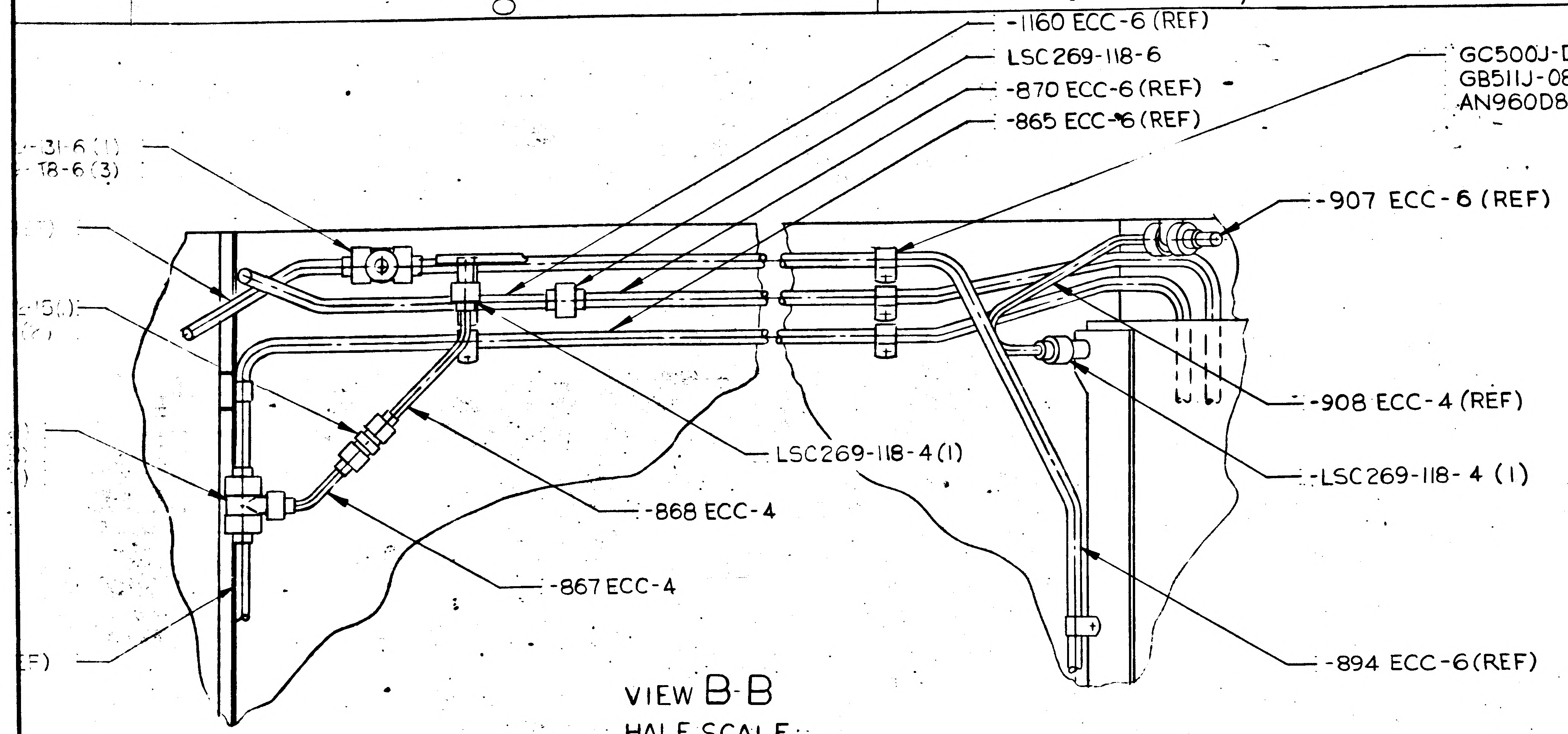
-1160 ECC-6 (REF)
LSC269-118-6
-870 ECC-6 (REF)
-865 ECC-6 (REF)
GC500J-D6T (6)
GB511J-08-1 (6)
AN960D8L (6)
-131-6 (1)
-118-6 (3)
-907 ECC-6 (REF)
-908 ECC-4 (REF)
LSC269-118-4 (1)
LSC269-118-4 (1)
-868 ECC-4
-867 ECC-4
-894 ECC-6 (REF)

VIEW B-B
HALF SCALE

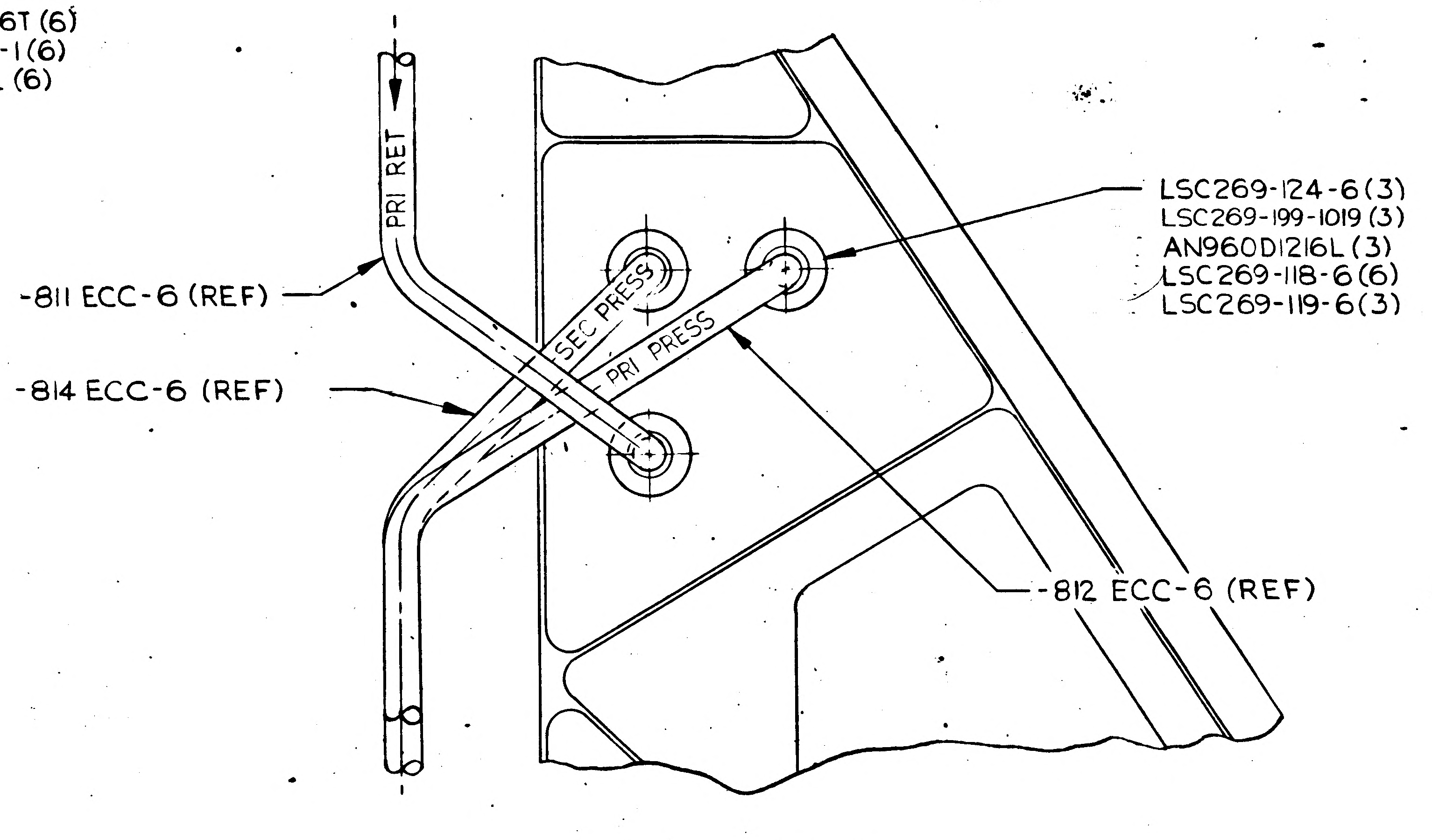
PRI RET
SEC PRESS
PRI PRESS
-811 ECC-6 (REF)
-814 ECC-6 (REF)
LSC269-124-6 (3)
LSC269-199-1019 (3)
AN960D1216L (3)
LSC269-118-6 (6)
LSC269-119-6 (3)
-812 ECC-6 (REF)

VIEW D-D
FULL. SCALE

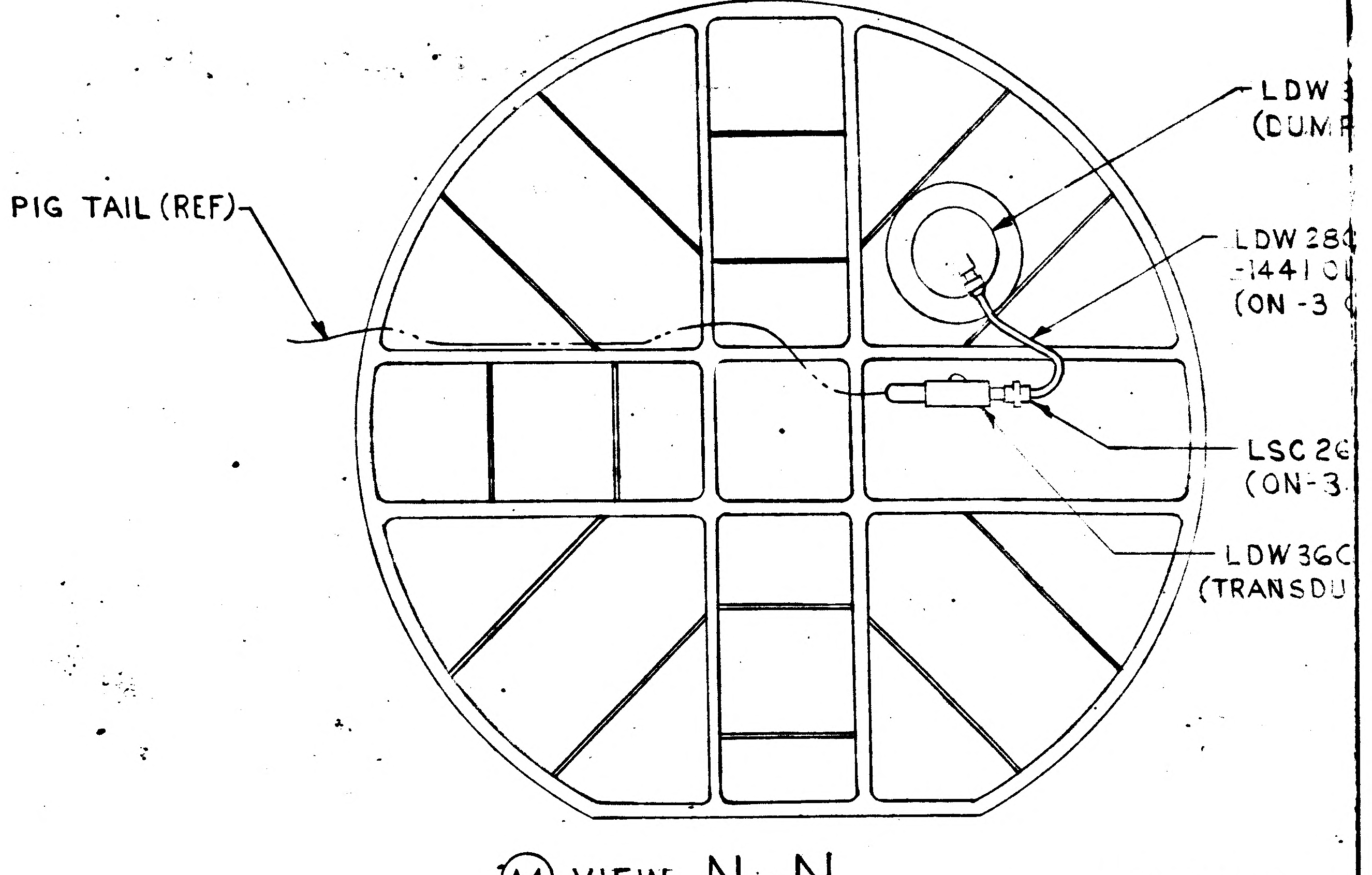
PIG TAIL (REF)
LDW
(DUMP
LDW 28
-1441
(ON-3
LSC 26
(ON-3
LDW 3GC
(TRANSDU

(A4) VIEW N-N
(ZONE 3B)
SCALE: NONE
LKG UP AT DOCKING HATCH

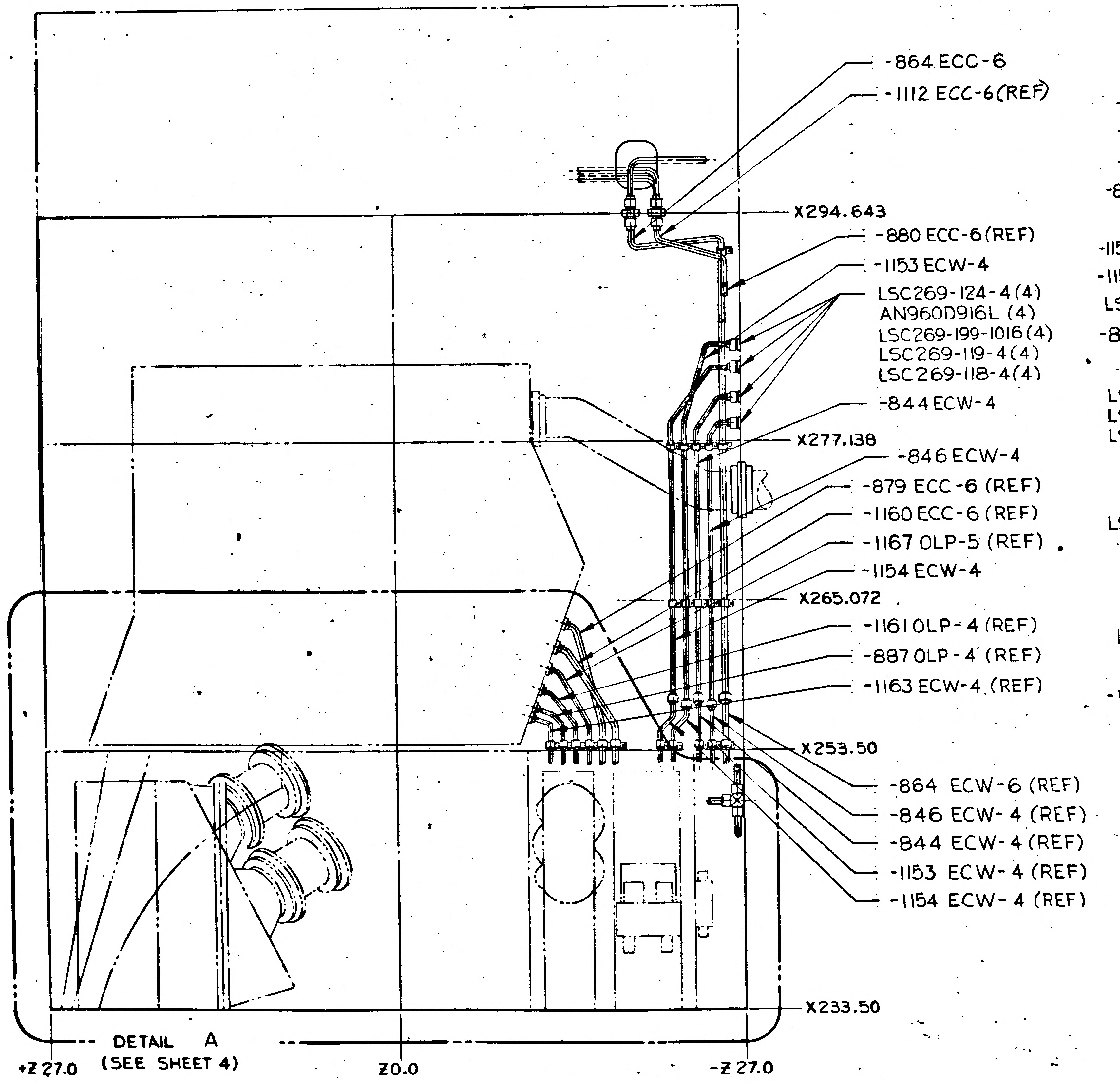
-864 ECC-6
-1112 ECC-6 (REF)
X294.643
-880 ECC-6 (REF)
-1153 ECW-4
LSC269-124-4 (4)
AN960D916L (4)
LSC269-199-1016 (4)
LSC269-119-4 (4)
LSC269-118-4 (4)
-844 ECW-4
X277.138
-846 ECW-4
-879 ECC-6 (REF)
-1160 ECC-6 (REF)
-1167 OLP-5 (REF)
-1154 ECW-4
X265.072
-1161 OLP-4 (REF)
-887 OLP-4 (REF)
-1163 ECW-4 (REF)
X253.50
-864 ECW-6 (REF)
-846 ECW-4 (REF)
-844 ECW-4 (REF)
-1153 ECW-4 (REF)
-1154 ECW-4 (REF)
X233.50
DETAIL A
(SEE SHEET 4)
+Z 27.0
Z0.0
-Z 27.0

VIEW LKG OUTB'D - RIGHT SIDE

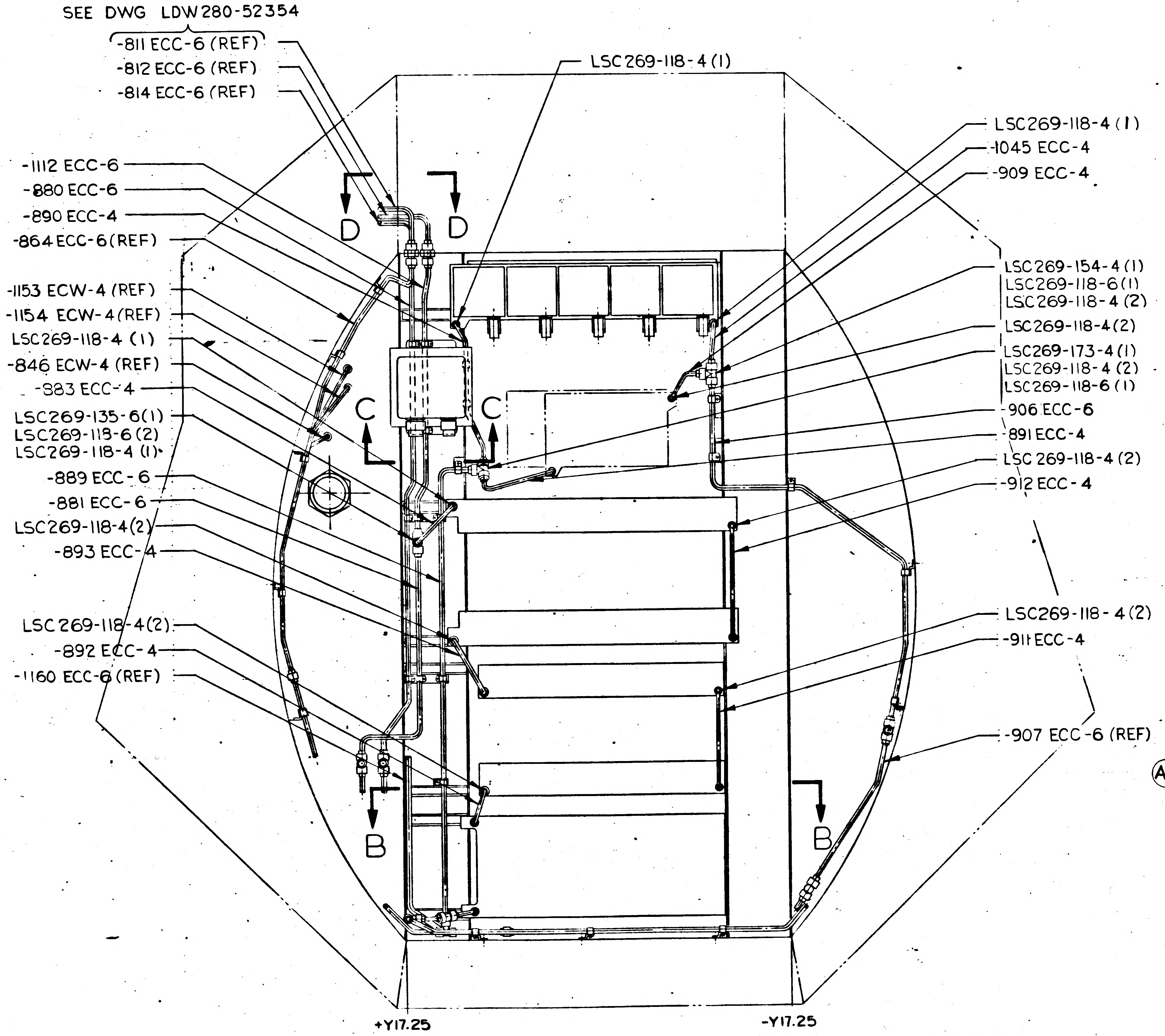
SEE DWG LDW280-52354
-811 ECC-6 (REF)
-812 ECC-6 (REF)
-814 ECC-6 (REF)
LSC269-118-4 (1)
-1112 ECC-6
-880 ECC-6
-890 ECC-4
-864 ECC-6 (REF)
-1153 ECW-4 (REF)
-1154 ECW-4 (REF)
LSC269-118-4 (1)
-846 ECW-4 (REF)
-883 ECC-4
LSC269-135-6 (1)
LSC269-118-6 (2)
LSC269-118-4 (1)
-889 ECC-6
-881 ECC-6
LSC269-118-4 (2)
-893 ECC-4
LSC269-118-4 (2)
-892 ECC-4
-1160 ECC-6 (REF)
LSC269-118-4 (1)
-1045 ECC-4
-909 ECC-4
LSC269-154-4 (1)
LSC269-118-6 (1)
LSC269-118-4 (2)
LSC269-118-4 (2)
LSC269-173-4 (1)
LSC269-118-4 (2)
LSC269-118-6 (1)
-906 ECC-6
-891 ECC-4
LSC 269-118-4 (2)
-912 ECC-4
LSC269-118-4 (2)
-911 ECC-4
-907 ECC-6 (REF)
D
D
C
C
B
B
+Y17.25
-Y17.25

VIEW LKG AFT
Z27 BHD

LDW280-52353-1 INSTL
-3 INSTL NOTED

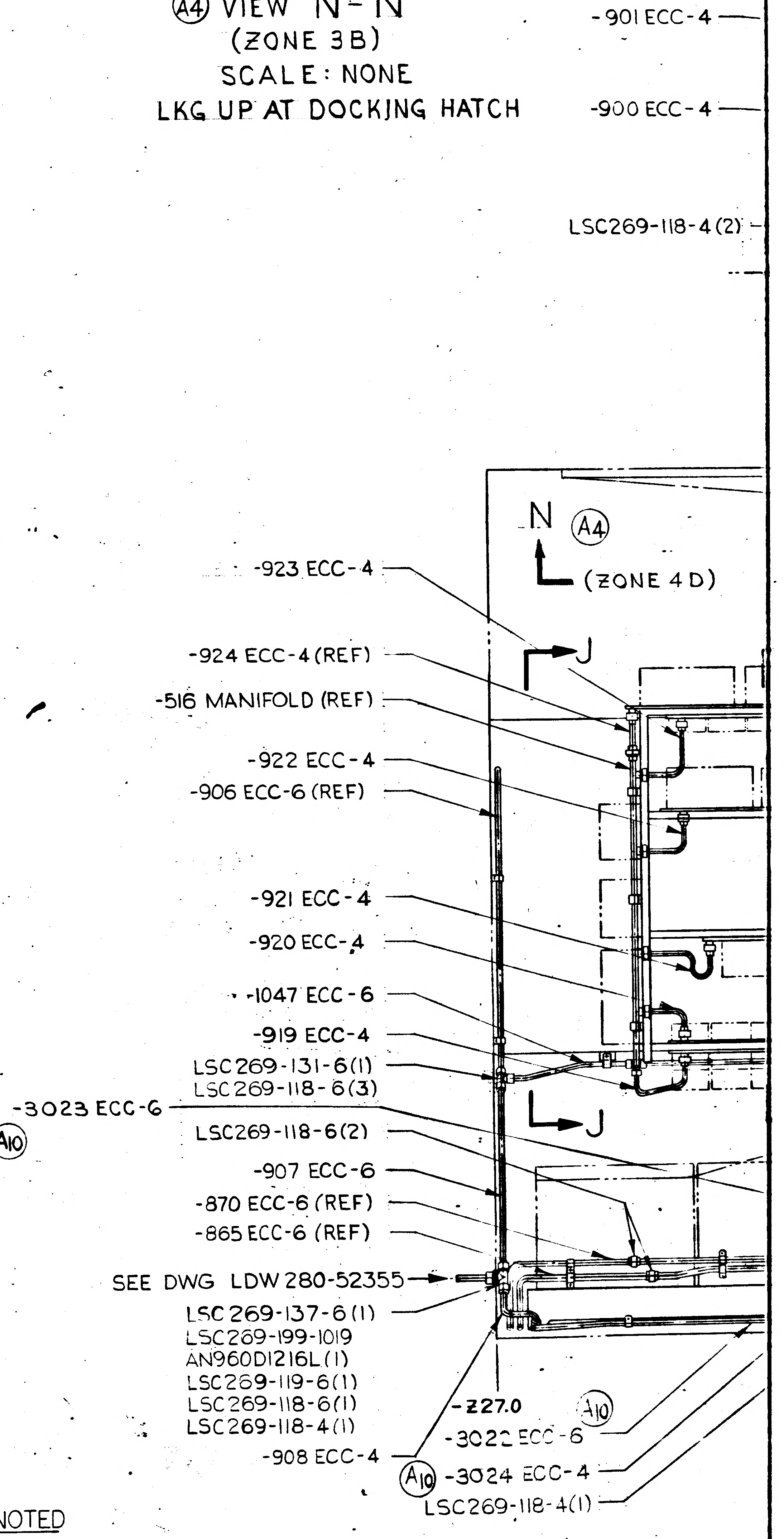
-901 ECC-4
-900 ECC-4
LSC269-118-4 (2)
N (A4)
(ZONE 4D)
J
J
-923 ECC-4
-924 ECC-4 (REF)
-516 MANIFOLD (REF)
-922 ECC-4
-906 ECC-6 (REF)
-921 ECC-4
-920 ECC-4
-1047 ECC-6
-919 ECC-4
LSC269-131-6 (1)
LSC269-118-6 (3)
-3023 ECC-6
(A10)
LSC269-118-6 (2)
-907 ECC-6
-870 ECC-6 (REF)
-865 ECC-6 (REF)
SEE DWG LDW280-52355
LSC269-137-6 (1)
LSC269-199-1019
AN960D1216L (1)
LSC269-119-6 (1)
LSC269-118-6 (1)
LSC269-118-4 (1)
-908 ECC-4
-Z27.0
(A10)
-3022 ECC-6
(A10) -3024 ECC-4
LSC269-118-4 (1)

VIEW LKG C

02/03 NAS 9-1100

8 7 6 5 4

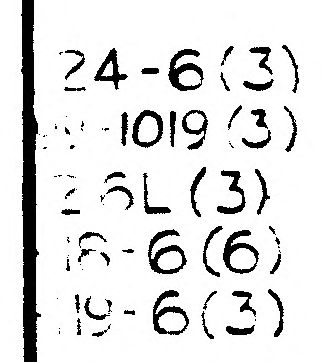
24-6(3)
-1019(3)
-6L(3)
-6-6(6)
-19-6(3)

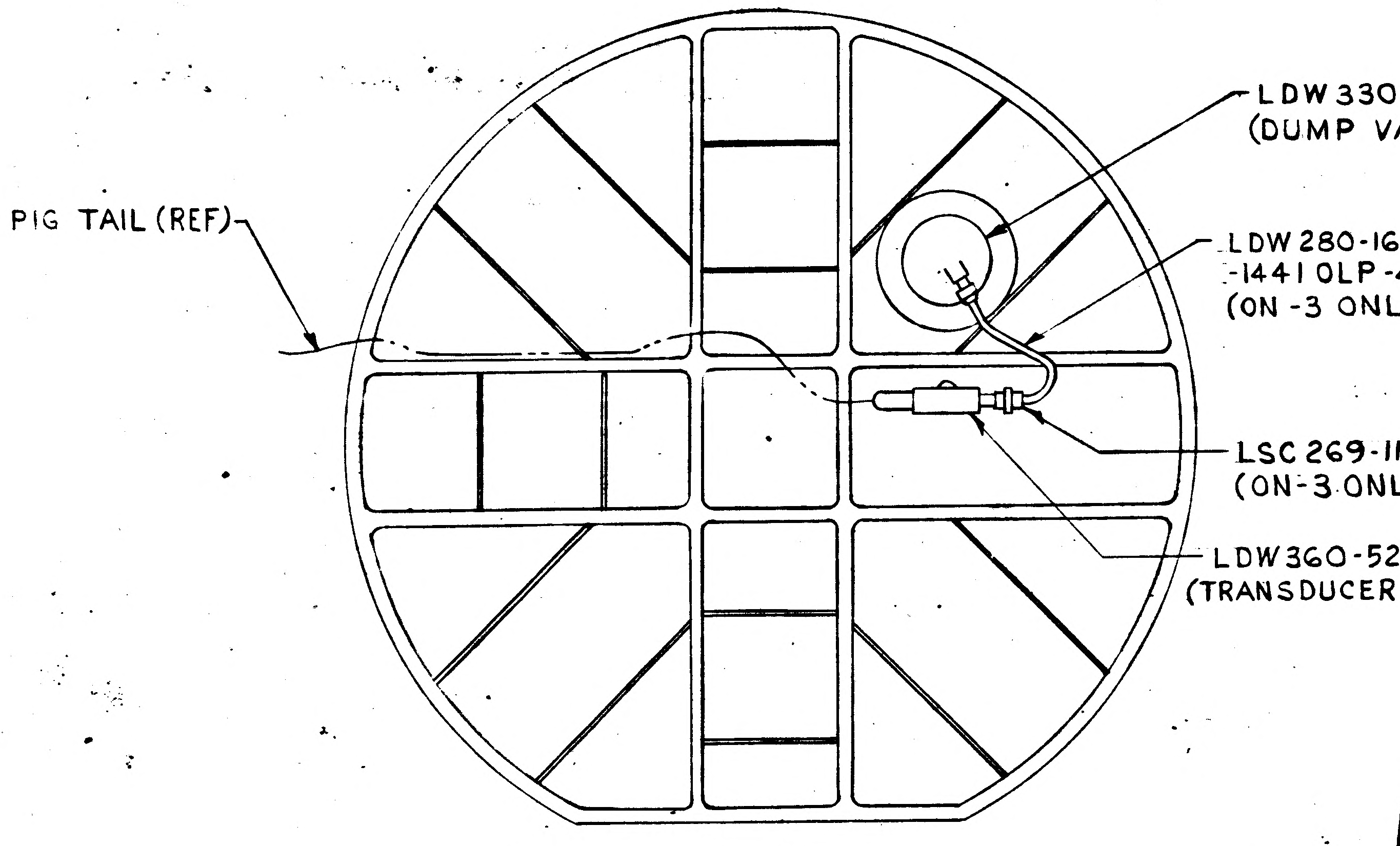
PIG TAIL (REF)
LDW 330-51011 (REF)
(DUMP VALVE INSTL)
LDW 280-16000
-1441 OLP-4
(ON -3 ONLY)
LSC 269-118-4 (2)
(ON-3 ONLY)
LDW360-52287(REF)
(TRANSDUCER INSTL)

Ⓐ4 VIEW N-N
(ZONE 3B)
SCALE: NONE
LKG UP AT DOCKING HATCH

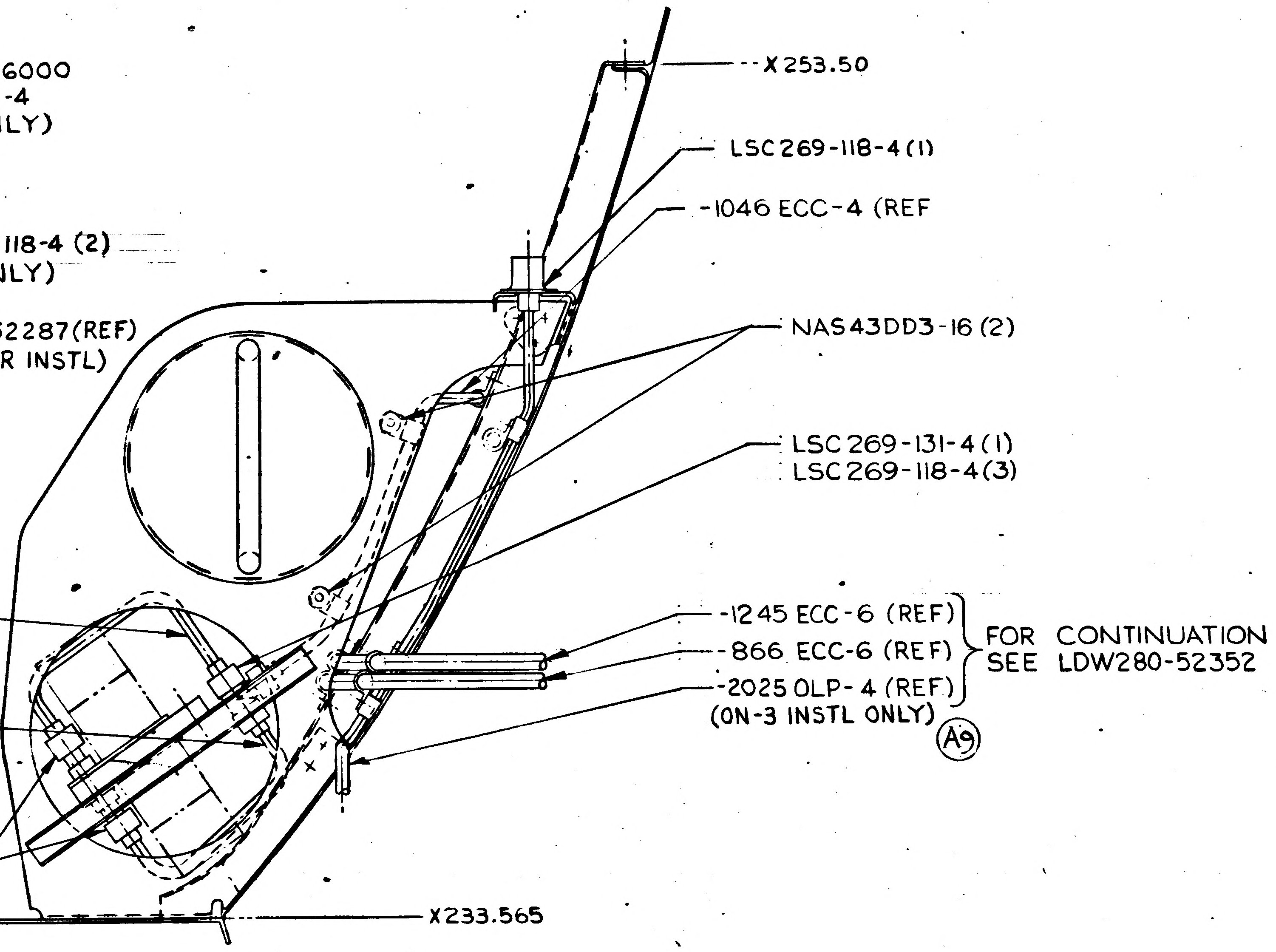
X 253.50
LSC 269-118-4 (1)
-1046 ECC-4 (REF)
NAS43DD3-16 (2)
LSC 269-131-4 (1)
LSC 269-118-4 (3)
-901 ECC-4
-900 ECC-4
LSC269-118-4 (2)
-1245 ECC-6 (REF)
-866 ECC-6 (REF)
-2025 OLP-4 (REF)
(ON-3 INSTL ONLY)
FOR CONTINUATION
SEE LDW280-52352
Ⓐ9
X233.565
-Y17.25

VIEW M-M
HALF SCALE

Ⓐ9

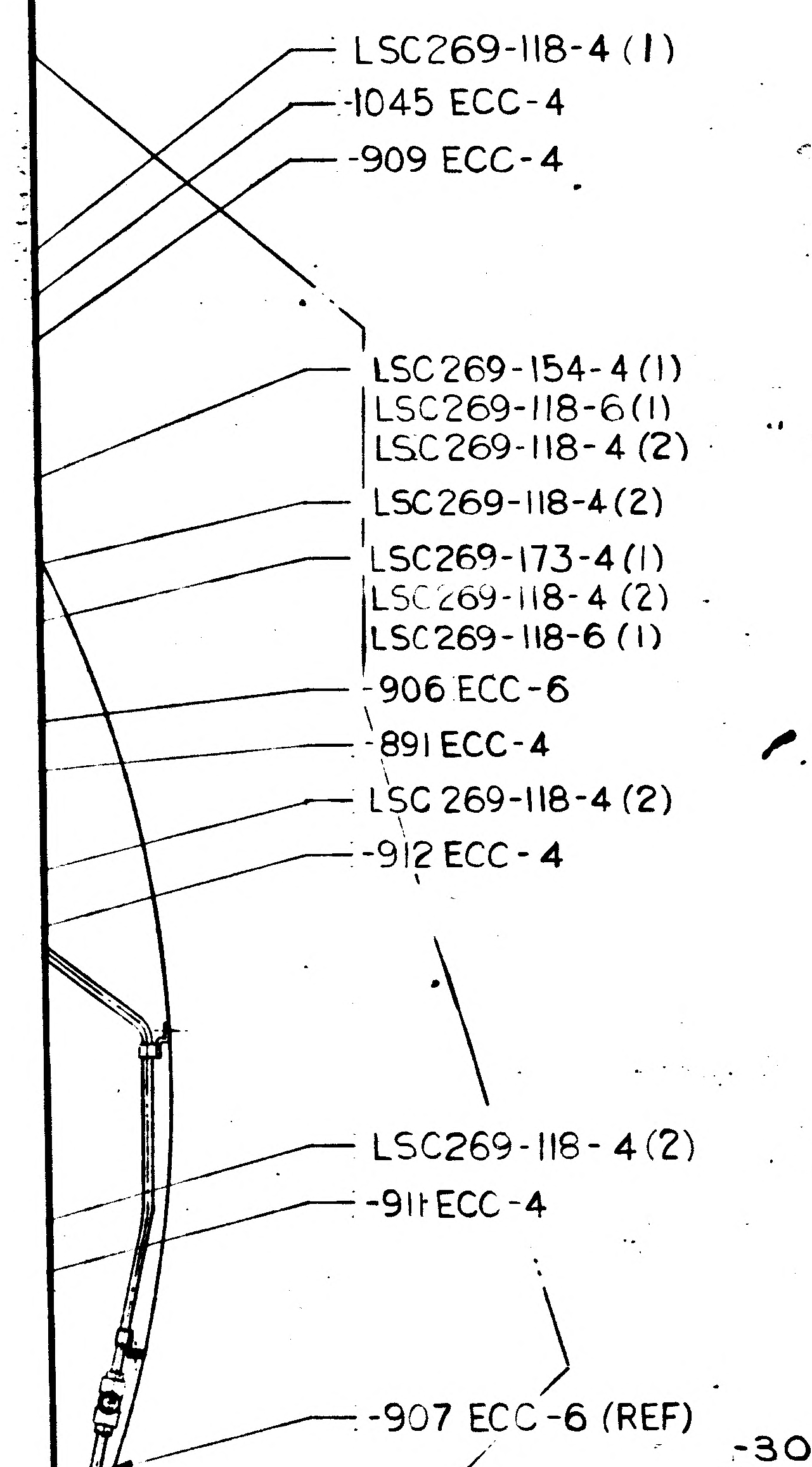
LSC269-118-4 (1)
-1045 ECC-4
-909 ECC-4
LSC269-154-4 (1)
LSC269-118-6 (1)
LSC269-118-4 (2)
LSC269-118-4 (2)
LSC269-173-4 (1)
LSC269-118-4 (2)
LSC269-118-6 (1)
-906 ECC-6
-891 ECC-4
LSC 269-118-4 (2)
-912 ECC-4
LSC269-118-4 (2)
-911 ECC-4
-907 ECC-6 (REF)

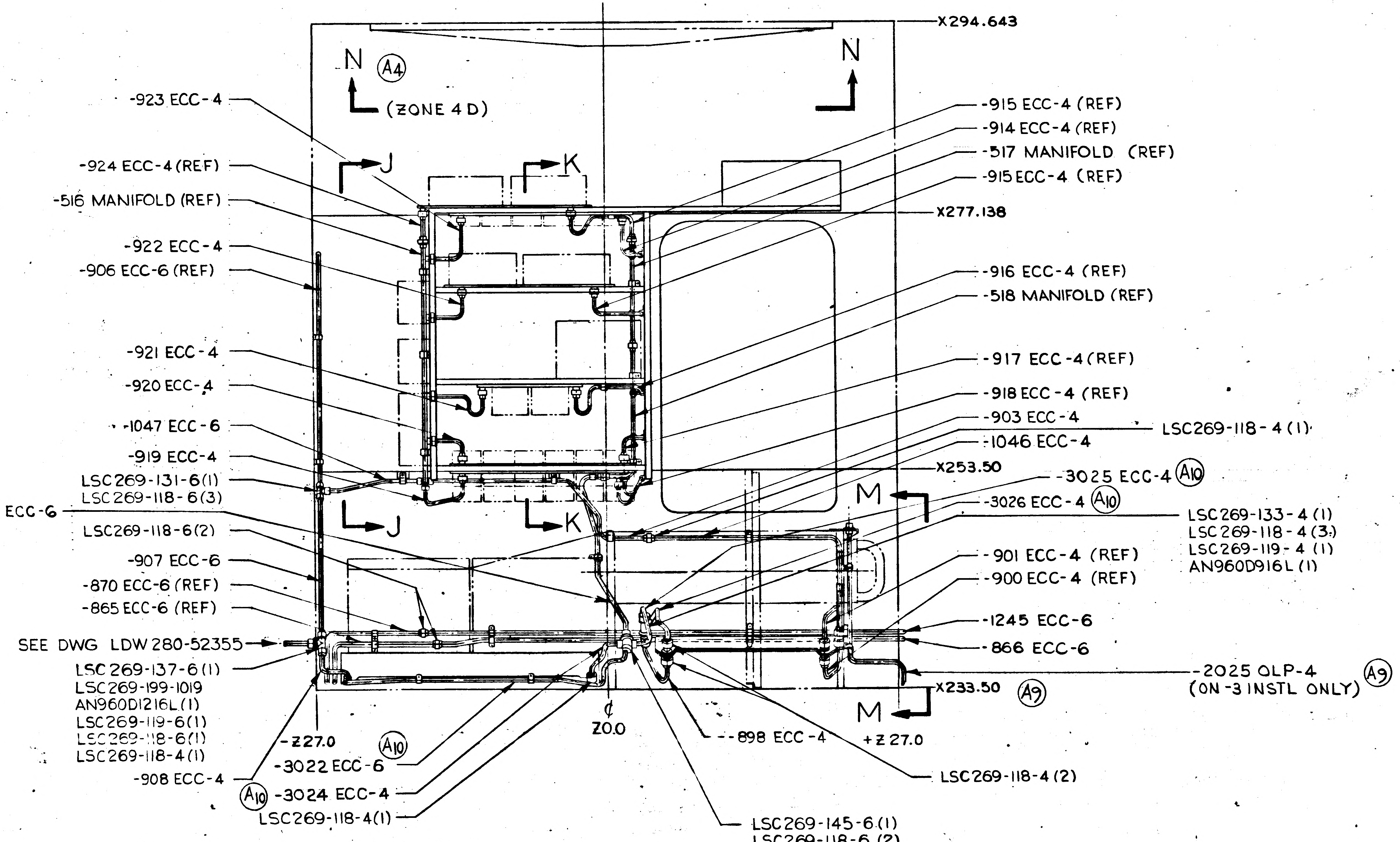
X294.643
N Ⓐ4
(ZONE 4 D)
N
-923 ECC-4
-924 ECC-4 (REF)
-516 MANIFOLD (REF)
-922 ECC-4
-906 ECC-6 (REF)
-921 ECC-4
-920 ECC-4
-1047 ECC-6
-919 ECC-4
LSC269-131-6(1)
LSC269-118-6(3)
-3023 ECC-6
Ⓐ10
LSC269-118-6(2)
-907 ECC-6
-870 ECC-6 (REF)
-865 ECC-6 (REF)
SEE DWG LDW 280-52355
LSC 269-137-6 (1)
LSC269-199-1019
AN960D1216L(1)
LSC269-119-6(1)
LSC269-118-6(1)
LSC269-118-4(1)
-908 ECC-4
-Z27.0
Ⓐ10
-3022 ECC-6
Ⓐ10 -3024 ECC-4
LSC269-118-4(1)
J
K
J
K
Z0.0
-915 ECC-4 (REF)
-914 ECC-4 (REF)
-517 MANIFOLD (REF)
-915 ECC-4 (REF)
X277.138
-916 ECC-4 (REF)
-518 MANIFOLD (REF)
-917 ECC-4 (REF)
-918 ECC-4 (REF)
-903 ECC-4
LSC269-118-4 (1)
-1046 ECC-4
X253.50
-3025 ECC-4 Ⓐ10
-3026 ECC-4 Ⓐ10
M
LSC269-133-4 (1)
LSC269-118-4 (3)
LSC269-119-4 (1)
AN960D916L (1)
-901 ECC-4 (REF)
-900 ECC-4 (REF)
-1245 ECC-6
-866 ECC-6
-2025 OLP-4
(ON -3 INSTL ONLY) Ⓐ9
M
X233.50 Ⓐ9
-898 ECC-4
+Z 27.0
LSC269-118-4 (2)
LSC269-145-6 (1)
LSC269-118-6 (2)
LSC269-118-4 (2)
LSC269-119-6 (1)
AN960D1216L (1)

VIEW LKG OUTB'D - LEFT SIDE

LDW280-52353-1 INSTL
-3 INSTL NOTED

03/03

NAS 9-1100

MANUFACTURING OPERATIONS
UNLESS OTHERWISE SPECIFIED
NOTES CHECKED √ APPLY TO THIS DWG.

PART NUMBER
AND ALL OTHER MARKINGS
IN REGION MARKED ⊠
USE BOTH SIDES IF NECESSARY.

FILLET AND INSIDE CORNER
RADII TOLERANCES
.016R TO .062R ± .010
.063R TO .250R ± .015
OVER .250R ± .030

DEPTH SHOWN FOR TAPPED HOLES IS FULL THDS. 2-3 IMP THDS. BEYOND PERMISSIBLE.

EXTERNAL THREAD LENGTH SHOWN INCLUDES 2 IMPERFECT THREADS MAX.

DO NOT CADMIUM PLATE & PAINT HOLES OR SURFACES MARKED WITH DOUBLE ASTERISK.

MISMATCH STEP OF ± .005 PERMISSIBLE DUE TO CHANGE OF CUTTERS AT INSIDE INTERSECTING SURFACES.

DIAMETERS MARKED
MUST BE CONCENTRIC WITHIN
FULL INDICATOR
READING

HOLES MUST BE KEPT FREE OF CHROME PLATING SOLUTION.

ALL DIMENSIONS SHOWN TO BE MET AFTER CADMIUM PLATING. THICKNESS OF PLATE .0003 MIN. TO .0005 MAX. MIN. THICKNESS TO BE .0002 ON THREADED AREAS. NO ALLOWANCE FOR PLATING IN HOLES

125 √ SURFACE ROUGHNESS INCLUDING REAMED HOLES PER MIL-STD-10

200 √ FOR ALL DRILLED HOLES

REMOVE ALL BURRS.
BREAK ALL EDGES .015-.031

INSPECTION INFORMATION
MINIMUM PERMISSIBLE
AVERAGE EDGE DISTANCE
MARKED IS

SYMBOL √ DENOTES SURFACE TO BE MACHINED

UNLESS OTHERWISE SPECIFIED TOLERANCE ON FLANGES IS ± 1/32

LENGTHS OF AN, NAS & MS AL ALY RIVETS SHORTER THAN 1 INCH ARE NOT SPECIFIED.

TOLERANCE ON LOFTED DELINEATIONS IS

DWG SIZE 34 X
PRINTING INFO ONLY
FULL SIZE SHEET AREA (36 X)= SQ. FT.
1/2 SIZE SHEET AREA (1/4 OF FULL)= SQ. FT.
PRINT TRIM LINE

D C B A

LDW280-52353 B
LDW280-52353 B

GRUMMAN AIRCRAFT ENGRG CORP., BETHPAGE, L. I., NEW YORK

MODEL OR END ITEM	SIZE	CODE IDENT NO.		
	J	26512	LDW280-52353	B
	SCALE 1/4			SHEET 4.00

Ⓑ

THIS IS AN ORIGINAL DRAWING

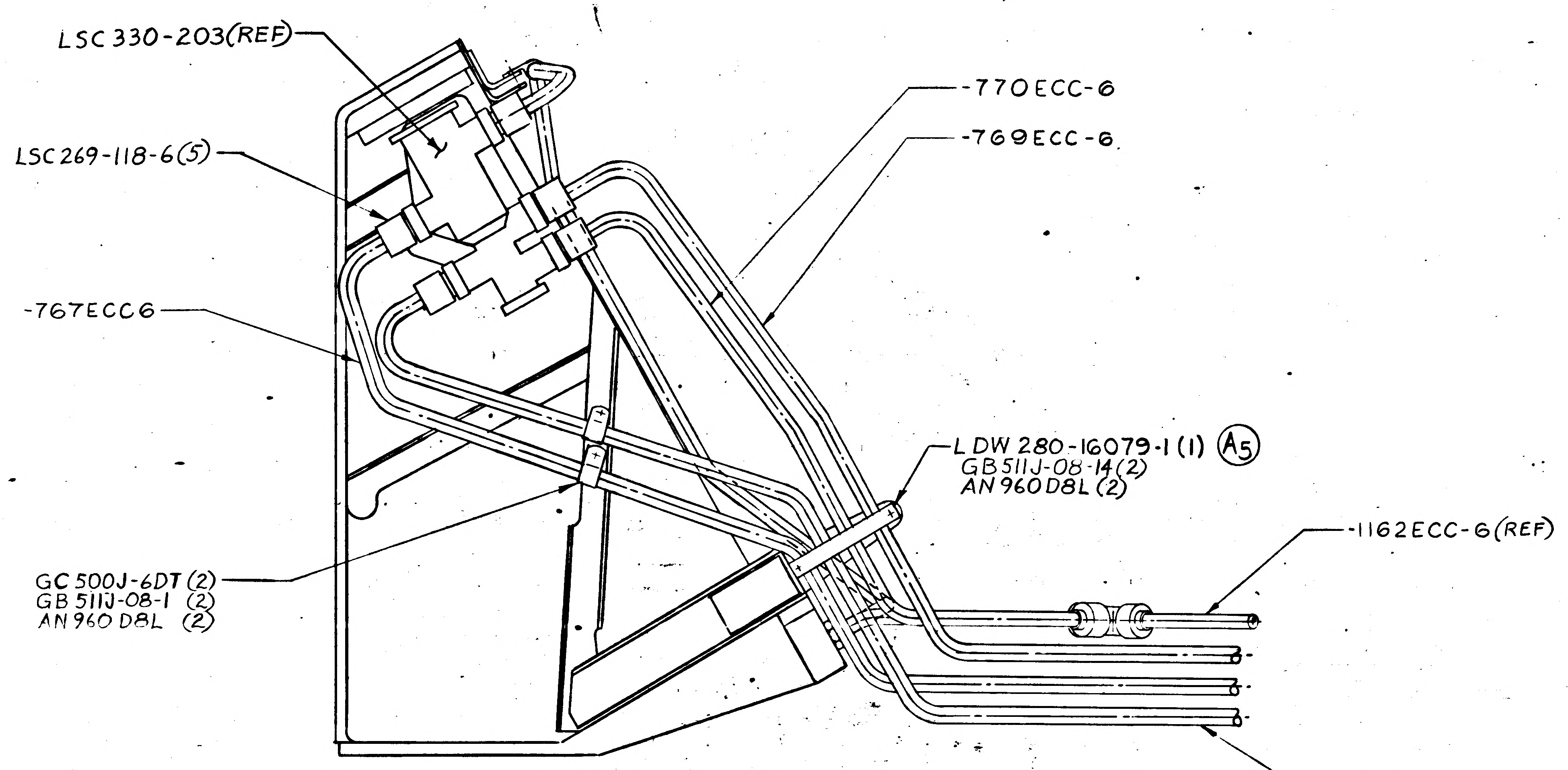
LSC 330-203(REF)
LSC 269-118-6(5)
-767ECC6
GC 500J-6DT (2)
GB 511J-08-1 (2)
AN 960 D8L (2)
-770ECC-6
-769ECC-6
LDW 280-16079-1 (1) A5
GB511J-08-14(2)
AN 960D8L (2)
-1162ECC-6(REF)
-766ECC-6

VIEW F-F
HALF SCALE

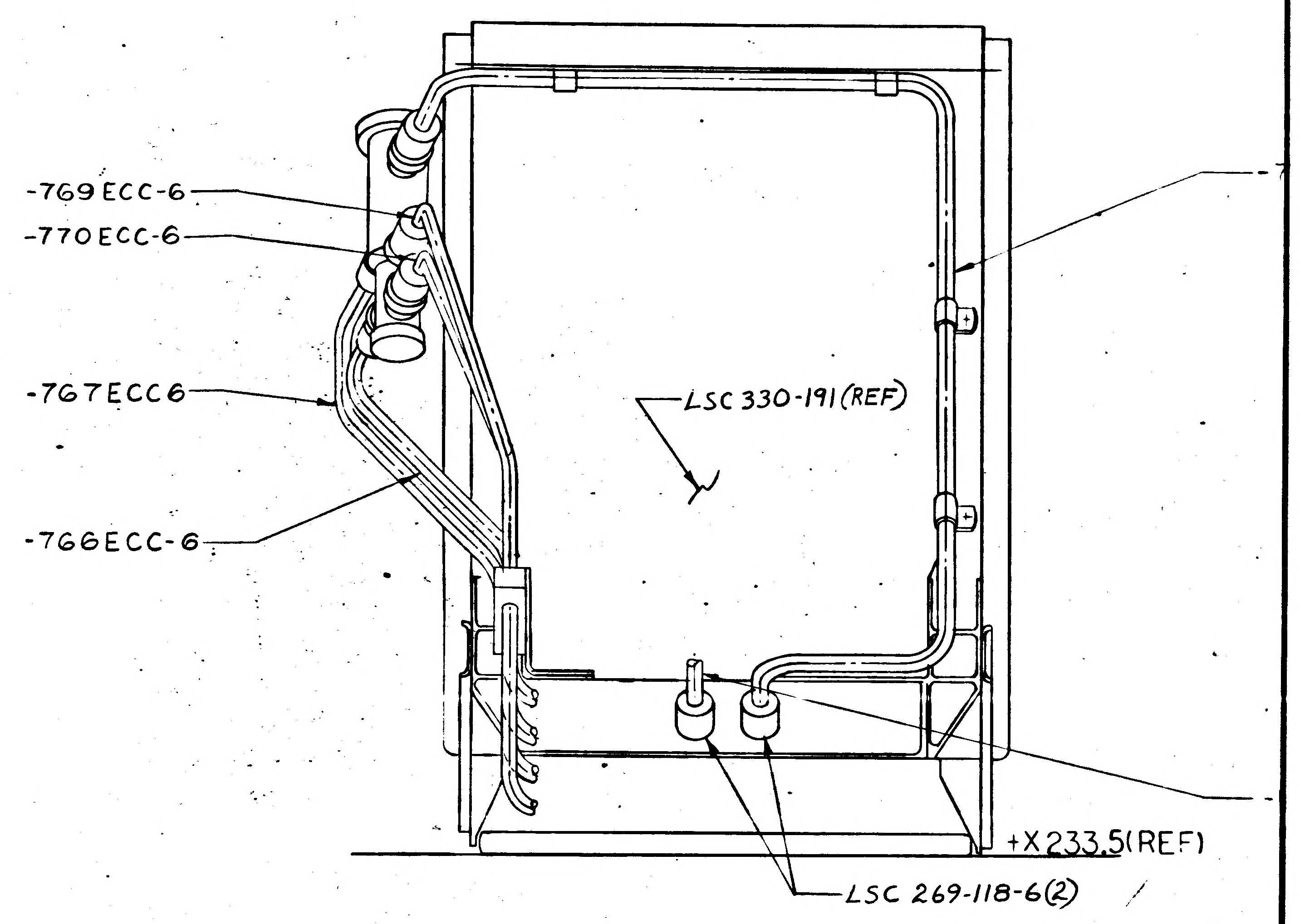
-769 ECC-6
-770 ECC-6
-767ECC6
-766ECC-6
LSC 330-191(REF)
+X233.5(REF)
LSC 269-118-6(2)

VIEW G-G
HALF SCALE

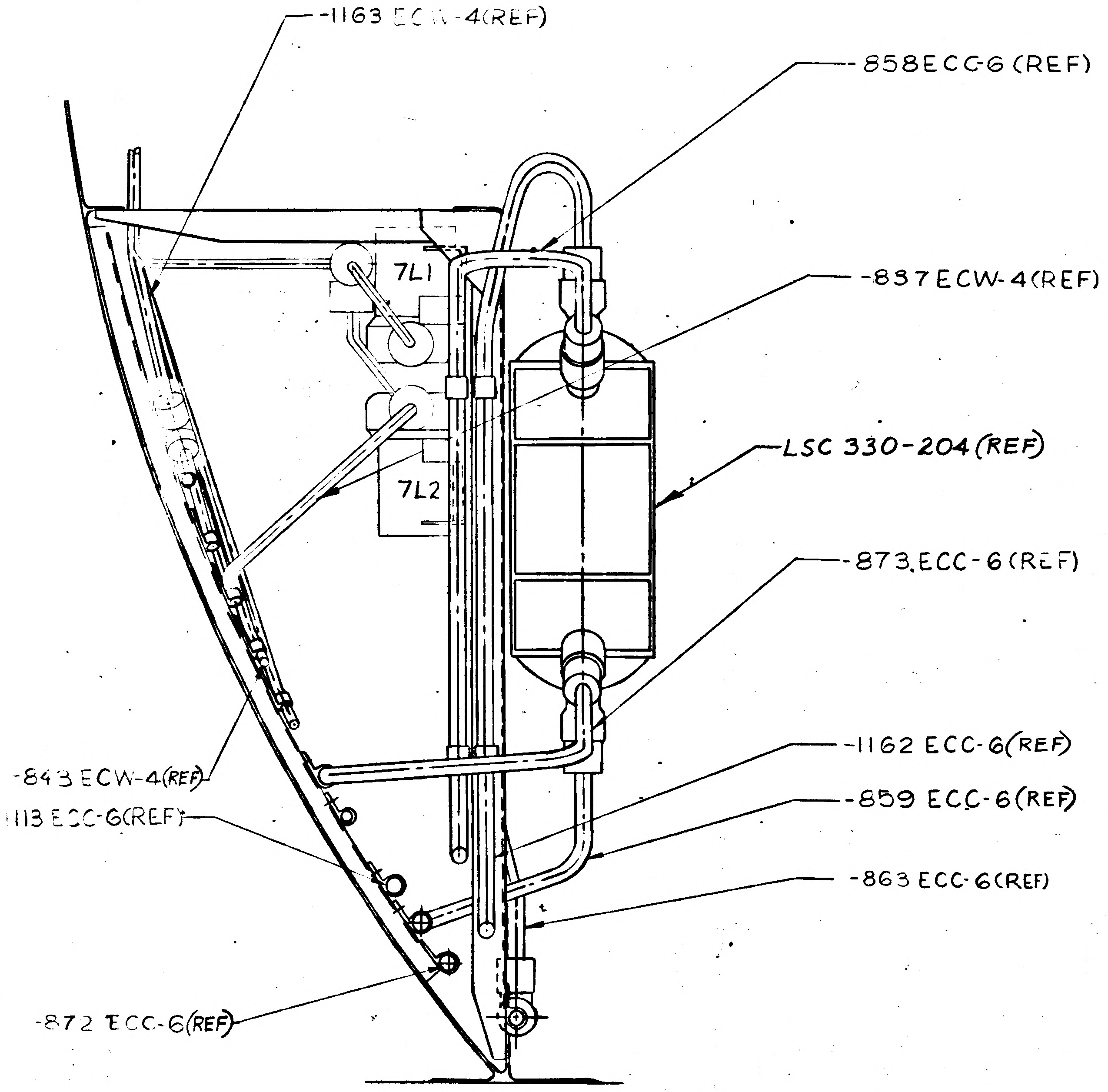
-1163 ECW-4(REF)
-858ECC-6 (REF)
-837 ECW-4(REF)
LSC 330-204(REF)
-873 ECC-6 (REF)
7L1
7L2
-843 ECW-4(REF)
-1113 ECC-6(REF)
-1162 ECC-6(REF)
-859 ECC-6(REF)
-863 ECC-6(REF)
-872 ECC-6(REF)

VIEW L-L
HALF SCALE

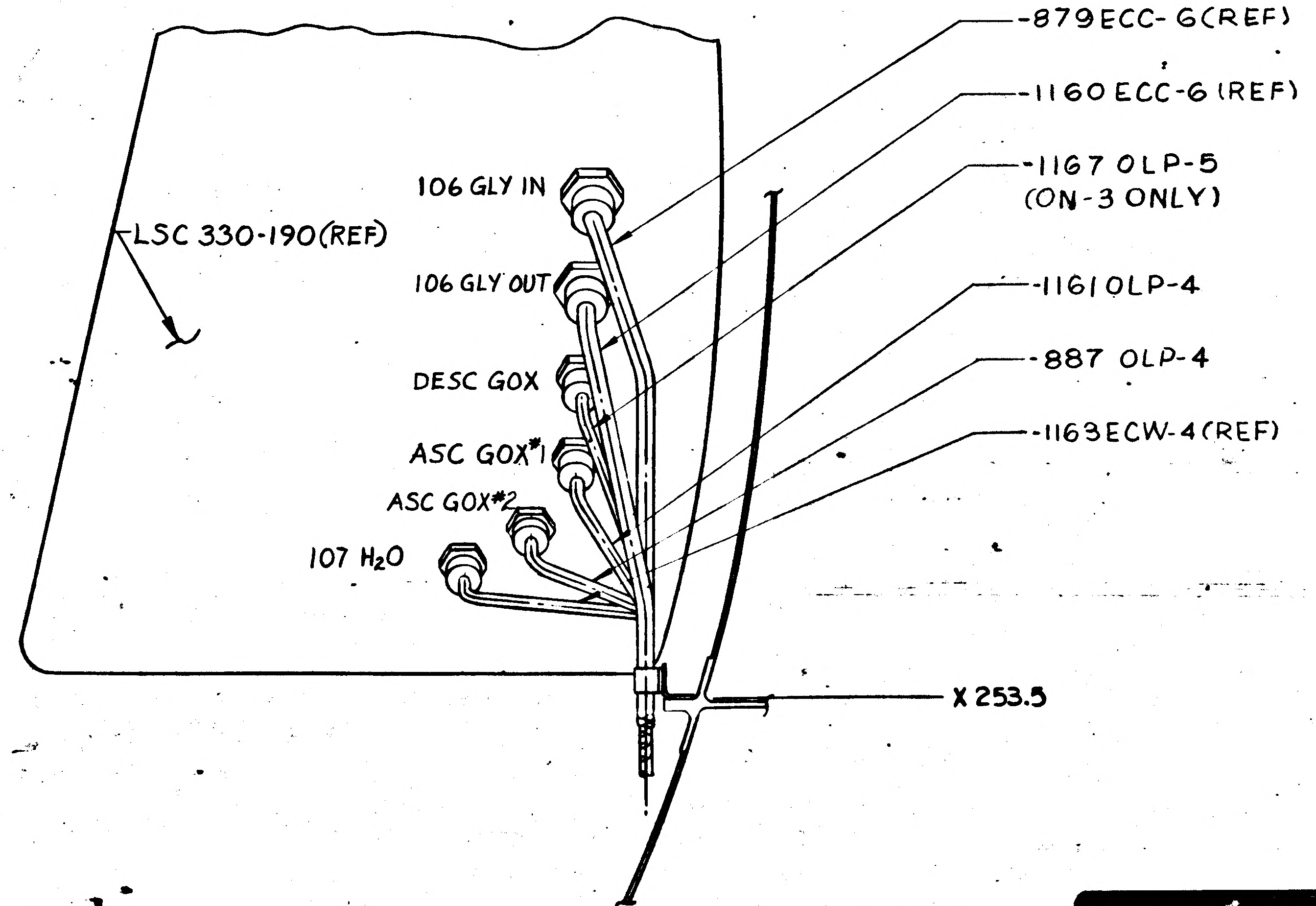
LSC 330-190(REF)
106 GLY IN
106 GLY OUT
DESC GOX
ASC GOX #1
ASC GOX #2
107 H₂O
-879 ECC-6(REF)
-1160 ECC-6 (REF)
-1167 OLP-5
(ON-3 ONLY)
-1161 OLP-4
-887 OLP-4
-1163ECW-4(REF)
X 253.5

VIEW E-E
HALF SCALE

011/03 NAS 9-1100

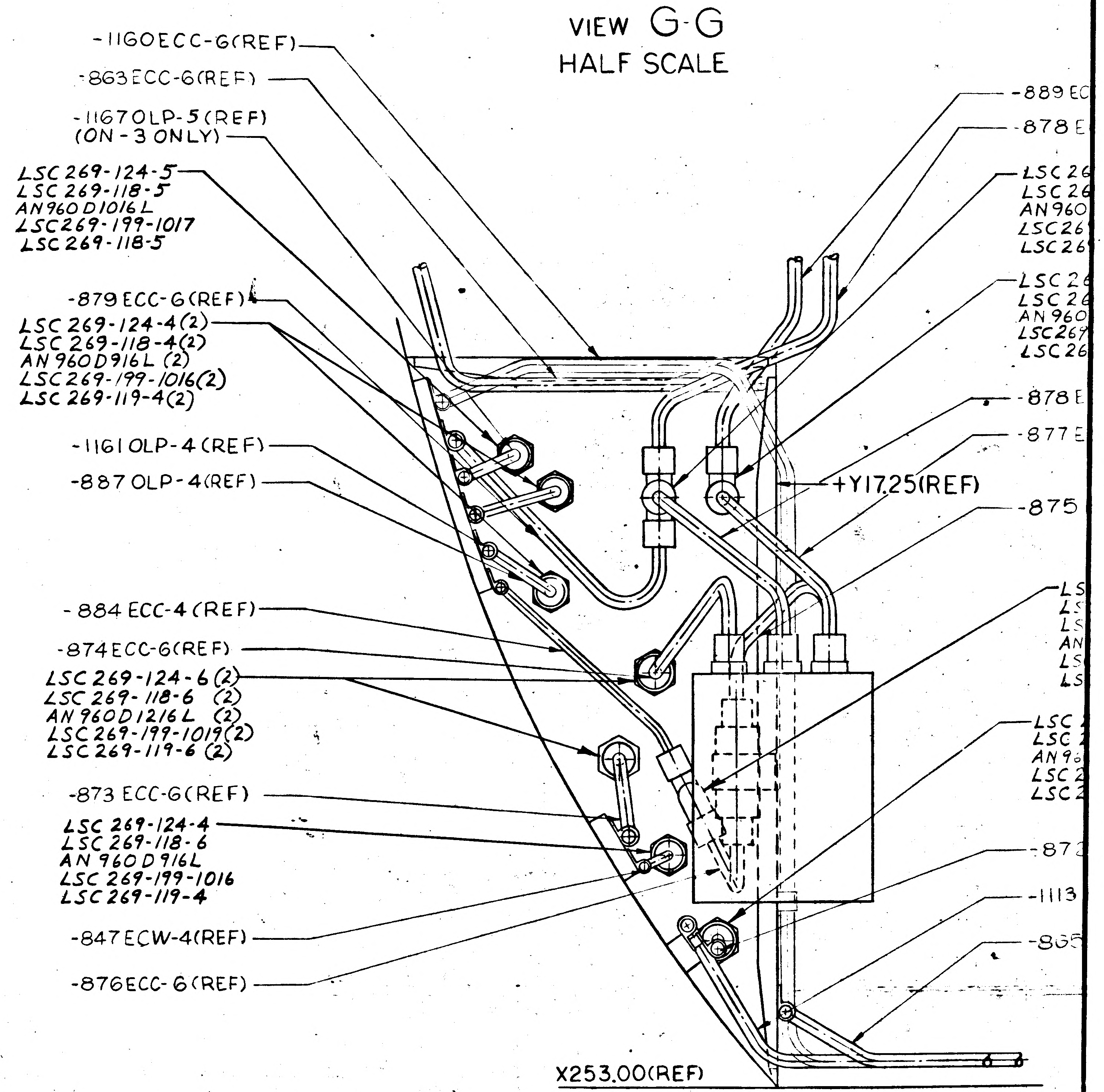
-1160ECC-6(REF)
-863ECC-6(REF)
-1167OLP-5(REF)
(ON-3 ONLY)
LSC 269-124-5
LSC 269-118-5
AN960D1016L
LSC269-199-1017
LSC 269-118-5
-879 ECC-6(REF)
LSC 269-124-4(2)
LSC 269-118-4(2)
AN 960D916L (2)
LSC269-199-1016(2)
LSC 269-119-4(2)
-1161 OLP-4 (REF)
-887 OLP-4(REF)
-884 ECC-4 (REF)
-874ECC-6(REF)
LSC 269-124-6(2)
LSC 269-118-6 (2)
AN 960D1216L (2)
LSC 269-199-1019(2)
LSC 269-119-6 (2)
-873 ECC-6(REF)
LSC 269-124-4
LSC 269-118-6
AN 960D916L
LSC 269-199-1016
LSC 269-119-4
-847ECW-4(REF)
-876ECC-6(REF)
-889 EC
-878 E
LSC 26
LSC 26
AN960
LSC26
LSC26
-878 E
-877 E
+Y17.25(REF)
-875
-87
-1113
-865
X253.00(REF)

SECTION H-H
HALF SCALE

18
17
16
15
14
A7 -1949 ECW-4 (REF)
A7 LSC 269-118-4 (2)
LDW 280-52353-7 ASSY
B5 A8
LSC 269-131-4
LSC 269-118-4
-841 ECW-4 (REF)
-838 ECW-4
-887 OLP-4 (REF)
-878 ECC-6 (REF)
-768 ECC-6
-859 ECC-6 (REF)
-872 ECC-6 (REF)
LSC 269-131-6 (1)
LSC 269-118-6 (3)
-767 ECC-6 (REF)
-766 ECC-6 (REF)
-770 ECC-6 (REF)
-769 ECC-6 (REF)
-1165 ECC-6
LSC 269-131-4 (1)
LSC 269-118-4 (3)
-875 ECC-6 (REF)
LSC 269-118-6 (4)
-877 ECC-6 (REF)
-840 ECW-4 (REF)
-856 ECC-6 (REF)
-1162 ECC-6 (REF)
LSC 330-10021 (REF)
F
G
-768 ECC-6 (REF)
-1950 ECW-4 (REF) A7
LSC 330-420 (REF)
LDW 280-52353-5 ASSY
-1165 ECC-6 (REF)
+X 233.5 (REF)
LSC 269-118-6 (2)
EF)
LSC 269-118-6 (2)
-879 ECC-6
106 GLY IN
-1160 ECC-6
106 GLY OUT
-1167 OLP-5 (ON-3 ONLY)
LSC 269-118-5 (1)
DESCENT GOX
LSC 269-118-4 (3)
-887 OLP-4
ASCENT GOX #1
1163 ECW-4
ASCENT GOX #2
107-H2O
LSC 269-118-4 (2)
LSC 269-118-4 (3)
-853 OLP-4
-854 OLP-4
-852 OLP-4
-855 ECC-6
LSC 269-118-6 (2)
H/X III
PLSS OXYGEN
-857 ECW-4
-789 OLP-4 (ON-3 ONLY)
A7 -1949 ECW-4
+Z 27.00 (REF)
A3 -1432 ECW-4 (REF)
A3 -1433 ECC-4 (REF)
X 253.5 (REF)
E
LSC 269-118-4 (4)
SEE SHT #4
WATER BOILER SEC
WATER BOILER PRIMARY
ASCENT WATER TANK R/S
ASCENT WATER L/S
PRI FROM PTA, IMU
GC500J-6DT (2)
GB511J-08-2 (1)
AN960D8L (2)
MS21042L08 (1)
-831 ECW-4
-1164 ECW-4
H
L
LSC 269-118-6 (1)
-1154 ECW-4
-1153 ECW-4
-844 ECW-4
-846 ECW-4
-864 ECW-6
LSC 269-118-4 (4)
LSC 269-118-6 (4)
GC500J-4DT (4)
GB511J-08-1 (4)
AN960D8L (4)
GC500J-6DT (3)
GB511J-08-1 (3)
AN960D8L (3)
-840 ECW-4
GC500J-5DT (1)
GB511J-08-1 (1)
AN960D8L (1)
-877 ECC-6 (REF)
-878 ECC-6 (REF)
GC500J-4DT (3)
GB511J-08-1 (3)
AN960D8L (3)
GC500J-6DT (8)
GB511J-08-1 (8)
AN960D8L (8)
-874 ECC-6 (REF)
-875 ECC-6 (REF)
-884 ECC-6 (REF)
FILTER ASSY LSC 330-222
-876 ECC-6
DESCENT WATER TANK
COOLANT RECIRCULATOR ASSY LSC 330-290 (REF)
-872 ECC-6
-1160 ECC-6 (REF)
-1113 ECC-6
X 233.5 (REF)
-865 ECC-6 (REF)
-Z 27.00 (REF)
GC500J-4DT (2)
GB511J-08-1 (2)
AN960D8L (2)
GC500J-6DT (2)
NAS 43DD-3-16 (1)
GB11J-08-6 (1)
AN960D8L (1)
-873 ECC-6 (REF)
LSC 269-135-6 (REF)
LSC 269-131-6 (1)
LSC 269-118-6 (3)
-863 ECC-6
LSC 269-118-6 (4)
-1111 ECC-6
REGENERATIVE H/X LSC 330-204 (REF)
B5 A8
-1162 ECC-6
-850 ECW-4
-837 ECW-4
-843 ECW-4
-859 ECC-6
-1110 ECC-6
-858 ECW-4
-845 ECW-4
℄ Z 0.0
LSC 269-118-6 (3)
-851 ECW-4
-836 ECW-4
LSC 293-131-6 (1)
LSC 293-118-6 (3)
GC500J-6DT (7)
GB511J-08-1 (7)
AN960D8L (7)
GC500J-4DT (7)
GB511J-08-1 (7)
AN960D8L (7)
GC500J-4DT (9)
GB511J-08-1 (9)
AN960D8L (9)
GC500J-4DT (4)
GB511J-08-1 (2)
AN960D8L (2)
NAS43DD3-24 (2)
GC500J-6DT (3)
GB511J-08-1 (3)
AN960D8L (3)
-856 ECC-6 (REF)
LSC 269-118-6 (3)
FOR CONTINUATION SEE DWG LDW 280-52352
-783 ECC-6 (REF)
-782 ECC-6 (REF)
-781 ECC-6 (REF)
-780 ECC-4 (REF)
-778 OLP-4 (REF)
A7 -1950 ECW-4 (REF)
LSC 269-148-4 (REF)
-774 ECW-4 (REF)
-775 ECW-4 (REF)
LSC 269-118-4 (11)
-1151 ECW-4 (REF)
180 OLP-4 (REF)
-776 ECW-4 (REF)
A7 LSC 269-131-4 (1)
LSC 269-118-4 (1)
A7 -1948 ECW-4 (REF)
-779 ECW-4 (REF)
-847 ECW-4
B5 A8
-889 ECC-6 (REF)
-878 ECC-6 (REF)
LSC 269-145-6
LSC 269-118-6 (3)
AN960D1216L
LSC 267-177-1019
LSC 269-119-6
LSC 269-133-6
LSC 269-118-6 (2)
AN960D1216L
LSC 267-177-1019
LSC 269-119-6
-876 ECC-6 (REF)
-877 ECC-6 (REF)
+Y 17.25 (REF)
-875 ECC-6 (REF)
LSC 269-137-6
LSC 269-199-1019
LSC 269-119-6
AN960D1216L
LSC 269-118-6
LSC 269-118-4
LSC 269-124-6
LSC 269-118-6
AN960D1216L
LSC 267-177-1019
LSC 269-119-6
-872 ECC-6 (REF)
-1113 ECC-6 (REF)
-865 ECC-6 (REF)

DETAIL "A"
HALF SCALE

H-H
CALE

02/03
NAS 9-1100

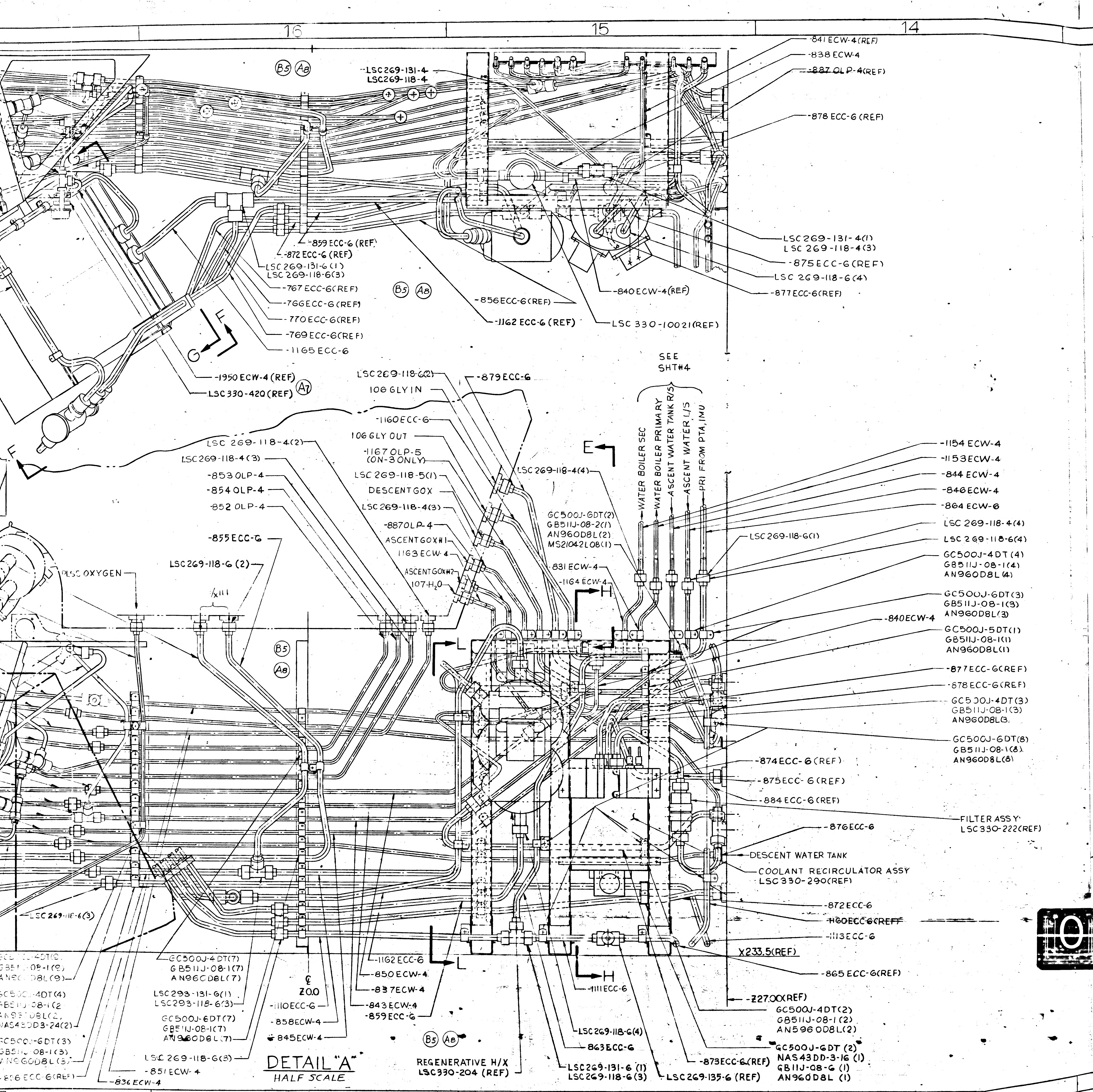
16
15
14
13
(B5) (A8)
-LSC269-131-4
LSC269-118-4
-841 ECW-4(REF)
-838 ECW-4
-887 OLP-4(REF)
-878 ECC-6 (REF)
-859 ECC-6 (REF)
-872 ECC-6 (REF)
LSC 269-131-6 (1)
LSC 269-118-6(3)
-767 ECC-6(REF)
-766 ECC-6 (REF)
-770 ECC-6(REF)
-769 ECC-6(REF)
-1165 ECC-6
(B5) (A8)
-856 ECC-6(REF)
-1162 ECC-6 (REF)
-840 ECW-4(REF)
LSC 330-10021(REF)
LSC 269-131-4(1)
LSC 269-118-4(3)
-875 ECC-6(REF)
LSC 269-118-6(4)
-877 ECC-6(REF)
G
F
-1950 ECW-4 (REF)
LSC 330-420 (REF)
(A7)
F
LSC269-118-6(2)
-879 ECC-6
106 GLY IN
-1160 ECC-6
106 GLY OUT
-1167 OLP-5
(ON-3 ONLY)
LSC 269-118-5(1)
DESCENT GOX
LSC 269-118-4(3)
-887 OLP-4
ASCENT GOX #1
1163 ECW-4
ASCENT GOX #2
107-H₂O
LSC 269-118-4(2)
LSC269-118-4(3)
-853 OLP-4
-854 OLP-4
-852 OLP-4
-855 ECC-6
LSC269-118-6 (2)
PLSS OXYGEN
/x111
E
LSC 269-118-4(4)
GC500J-6DT(2)
GB511J-08-2(1)
AN960D8L(2)
MS21042L08(1)
831 ECW-4
-1164 ECW-4
H
SEE
SHT#4
WATER BOILER SEC
WATER BOILER PRIMARY
ASCENT WATER TANK R/S
ASCENT WATER L/S
PRI FROM PTA, IMU
LSC 269-118-6(1)
-1154 ECW-4
-1153 ECW-4
-844 ECW-4
-846 ECW-4
-864 ECW-6
LSC 269-118-4(4)
LSC 269-118-6(4)
GC500J-4DT(4)
GB511J-08-1(4)
AN960D8L(4)
GC500J-6DT(3)
GB511J-08-1(3)
AN960D8L(3)
-840 ECW-4
GC500J-5DT(1)
GB511J-08-1(1)
AN960D8L(1)
-877 ECC-6(REF)
-878 ECC-6(REF)
GC500J-4DT(3)
GB511J-08-1(3)
AN960D8L(3)
GC500J-6DT(8)
GB511J-08-1(8)
AN960D8L(8)
L
(B5)
(A8)
-874 ECC-6 (REF)
-875 ECC-6 (REF)
-884 ECC-6 (REF)
-876 ECC-6
FILTER ASSY
LSC330-222(REF)
DESCENT WATER TANK
COOLANT RECIRCULATOR ASSY
LSC330-290(REF)
-872 ECC-6
~~-1160 ECC-6(REF)~~
-1113 ECC-6
X233.5(REF)
-865 ECC-6(REF)
-Z27.00(REF)
LSC269-118-6(3)
GC500J-4DT(9)
GB511J-08-1(9)
AN960D8L(9)
GC500J-4DT(4)
GB511J-08-1(2)
AN960D8L(2)
NAS43DD3-24(2)
GC500J-6DT(3)
GB511J-08-1(3)
AN960D8L(3)
-856 ECC-6(REF)
-836 ECW-4
GC500J-4DT(7)
GB511J-08-1(7)
AN960D8L(7)
LSC293-131-6(1)
LSC293-118-6(3)
GC500J-6DT(7)
GB511J-08-1(7)
AN960D8L(7)
LSC 269-118-6(3)
-851 ECW-4
℄
Z0.0
-1110 ECC-6
-858 ECW-4
-845 ECW-4
-1162 ECC-6
-850 ECW-4
-837 ECW-4
-843 ECW-4
-859 ECC-6
L
(B5) (A8)
REGENERATIVE H/X
LSC330-204 (REF)
-1111 ECC-6
H
LSC269-118-6(4)
863 ECC-6
LSC269-131-6 (1)
LSC269-118-6(3)
LSC269-135-6 (REF)
-873 ECC-6 (REF)
GC500J-4DT(2)
GB511J-08-1(2)
AN596 0D8L(2)
GC500J-6DT (2)
NAS43DD-3-16 (1)
GB11J-08-6 (1)
AN960D8L (1)
7

DETAIL "A"
HALF SCALE

MANUFACTURING OPERATIONS
UNLESS OTHERWISE SPECIFIED
NOTES CHECKED ✓ APPLY TO THIS DWG.

- PART NUMBER AND ALL OTHER MARKINGS IN REGION MARKED ▭ USE BOTH SIDES IF NECESSARY.
- FILLET AND INSIDE CORNER RADII TOLERANCES
  - .016R TO .062R ± .010
  - .063R TO .250R ± .015
  - OVER .250R ± .030
- DEPTH SHOWN FOR TAPPED HOLES IS FULL THDS. 2-3 IMP THDS. BEYOND PERMISSIBLE.
- EXTERNAL THREAD LENGTH SHOWN INCLUDES 2 IMPERFECT THREADS MAX.
- DO NOT CADMIUM PLATE & PAINT HOLES OR SURFACES MARKED WITH DOUBLE ASTERISK.
- MISMATCH STEP OF ± .005 PERMISSIBLE DUE TO CHANGE OF CUTTERS AT INSIDE INTERSECTING SURFACES.
- DIAMETERS MARKED MUST BE CONCENTRIC WITHIN FULL INDICATOR READING
- HOLES MUST BE KEPT FREE OF CHROME PLATING SOLUTION.
- ALL DIMENSIONS SHOWN TO BE MET AFTER CADMIUM PLATING. THICKNESS OF PLATE .0003 MIN. TO .0005 MAX. MIN. THICKNESS TO BE .0002 ON THREADED AREAS. NO ALLOWANCE FOR PLATING IN HOLES
- 125 √ SURFACE ROUGHNESS INCLUDING REAMED HOLES PER MIL-STD-10
- 200 √ FOR ALL DRILLED HOLES
- REMOVE ALL BURRS. BREAK ALL EDGES .015-.031
- INSPECTION INFORMATION MINIMUM PERMISSIBLE AVERAGE EDGE DISTANCE MARKED IS
- SYMBOL √ DENOTES SURFACE TO BE MACHINED
- UNLESS OTHERWISE SPECIFIED TOLERANCE ON FLANGES IS ± 1/32
- LENGTHS OF AN, NAS & MS AL ALY RIVETS SHORTER THAN 1 INCH ARE NOT SPECIFIED.
- TOLERANCE ON LOFTED DELINEATIONS IS

DWG SIZE 34 X

D

C

B

PRINTING INFO ONLY
FULL SIZE SHEET AREA (36 X)= SQ. FT.
1/2 SIZE SHEET AREA (1/4 OF FULL)= SQ. FT.

PRINT TRIM LINE

LDW280-52353 B

LDW280-52353 B

03/03

NAS 9-1100

GRUMMAN AIRCRAFT ENGRG CORP., BETHPAGE, L. I., NEW YORK

SIZE	CODE IDENT NO.		
J	26512	LDW280-52353	B

MODEL OR END ITEM | SCALE 1/4 | SHEET 5.00

B

13

THIS IS AN ORIGINAL DRAWING

30 29 28 27

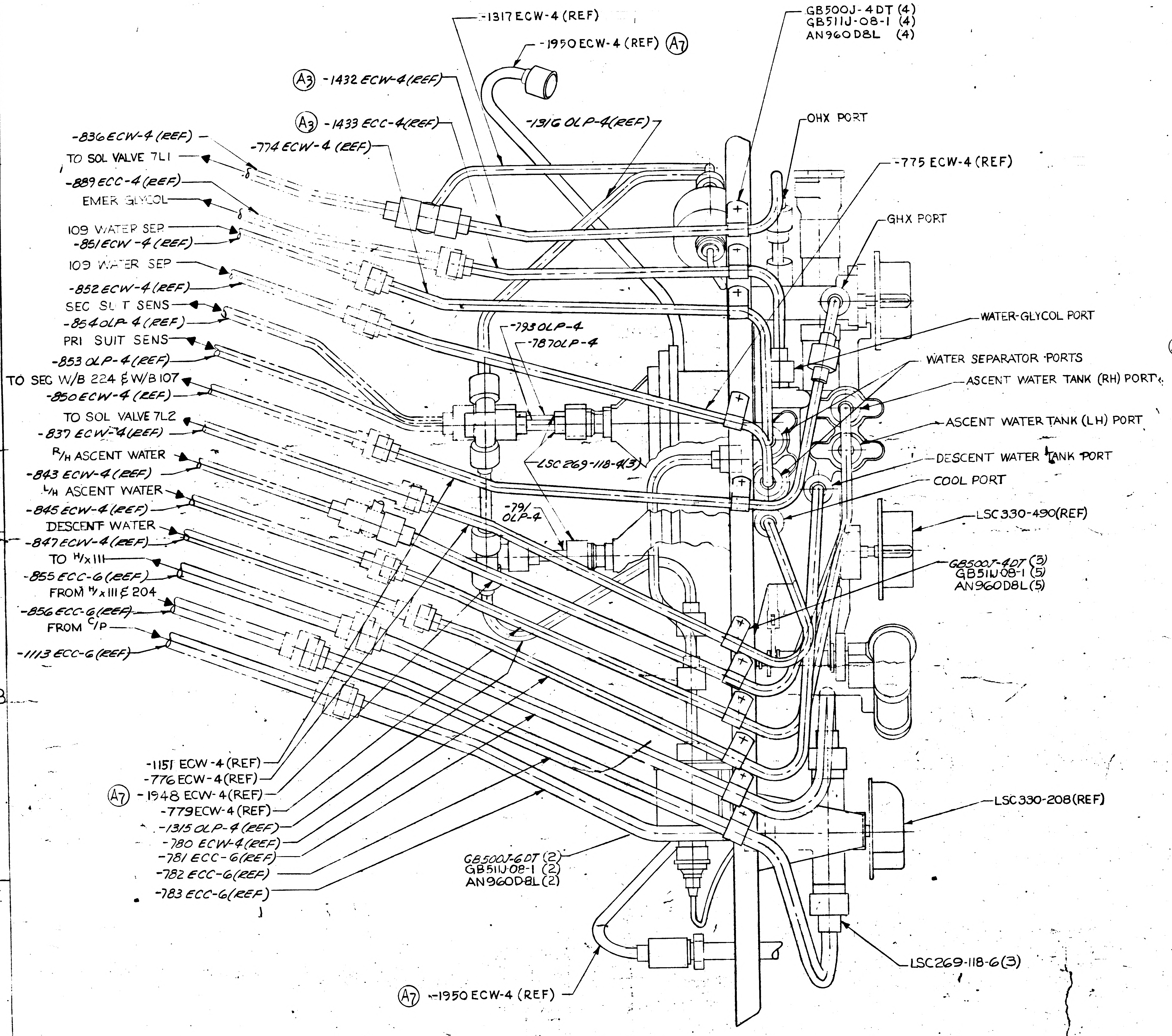
-1317 ECW-4 (REF)
-1950 ECW-4 (REF) (A7)
GB500J-4DT (4)
GB511J-08-1 (4)
AN960D8L (4)
(A3) -1432 ECW-4 (REF)
(A3) -1433 ECC-4 (REF)
-1316 OLP-4 (REF)
OHX PORT
-836 ECW-4 (REF)
TO SOL VALVE 7L1
-774 ECW-4 (REF)
-775 ECW-4 (REF)
-889 ECC-4 (REF)
EMER GLYCOL
GHX PORT
109 WATER SEP
-851 ECW-4 (REF)
109 WATER SEP
-852 ECW-4 (REF)
SEC SUIT SENS
-854 OLP-4 (REF)
WATER-GLYCOL PORT
-793 OLP-4
-787 OLP-4
PRI SUIT SENS
-853 OLP-4 (REF)
WATER SEPARATOR PORTS
TO SEC W/B 224 & W/B 107
ASCENT WATER TANK (RH) PORT
-850 ECW-4 (REF)
TO SOL VALVE 7L2
ASCENT WATER TANK (LH) PORT
-837 ECW-4 (REF)
LSC 269-118-4 (3)
R/H ASCENT WATER
DESCENT WATER TANK PORT
-843 ECW-4 (REF)
COOL PORT
L/H ASCENT WATER
-845 ECW-4 (REF)
-791 OLP-4
LSC 330-490 (REF)
DESCENT WATER
-847 ECW-4 (REF)
TO H/x 111
-855 ECC-6 (REF)
GB500J-4DT (5)
GB511J-08-1 (5)
AN960D8L (5)
FROM H/x 111 & 204
-856 ECC-6 (REF)
FROM C/P
-1113 ECC-6 (REF)
-1151 ECW-4 (REF)
-776 ECW-4 (REF)
(A7) -1948 ECW-4 (REF)
-779 ECW-4 (REF)
LSC 330-208 (REF)
-1315 OLP-4 (REF)
-780 ECW-4 (REF)
-781 ECC-6 (REF)
GB500J-6DT (2)
GB511J-08-1 (2)
AN960D8L (2)
-782 ECC-6 (REF)
-783 ECC-6 (REF)
LSC 269-118-6 (3)
(A7) -1950 ECW-4 (REF)

VIEW LKG INBD

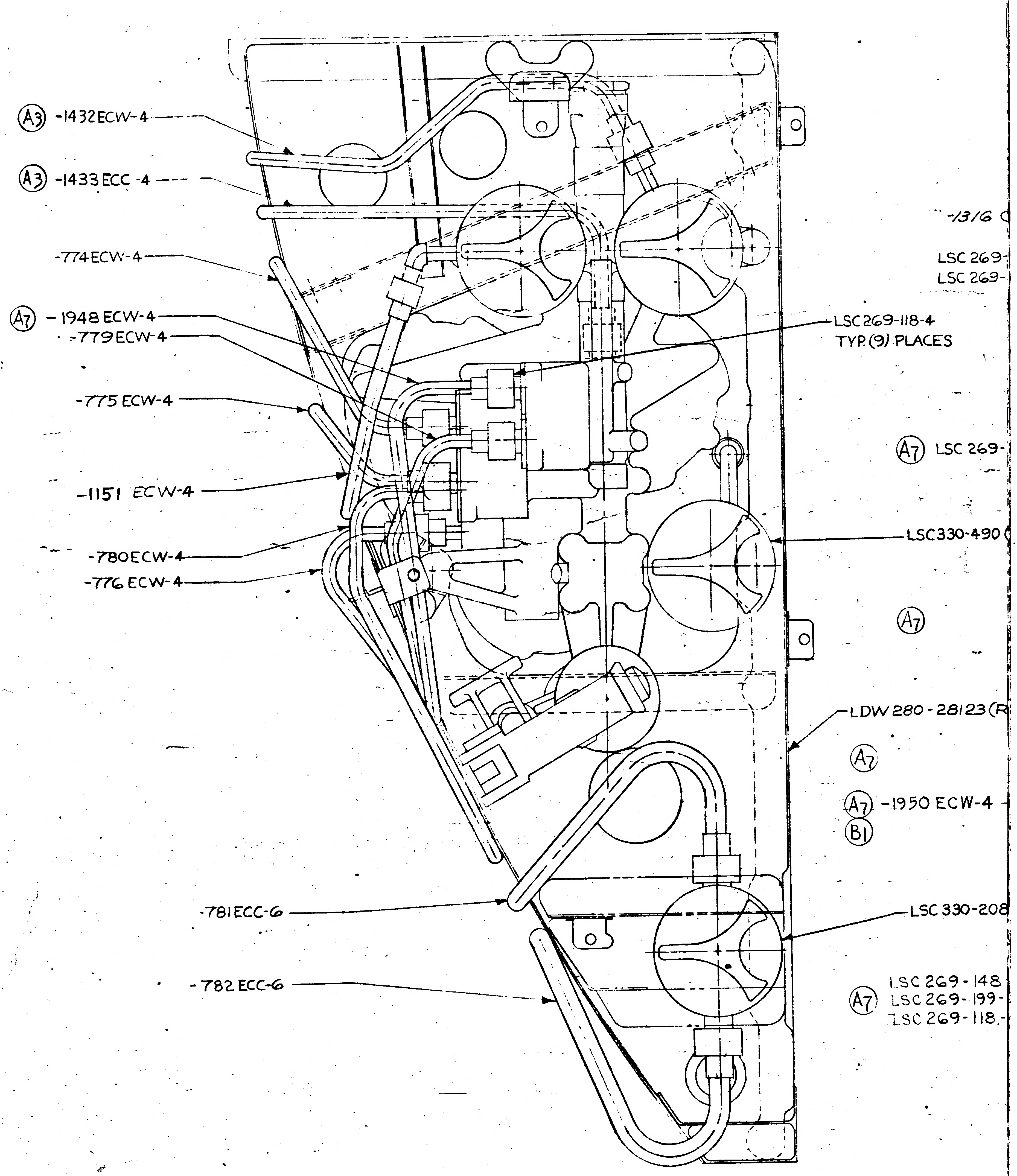
(A3) -1432 ECW-4
(A3) -1433 ECC-4
-1316
-774 ECW-4
LSC 269-
LSC 269-
(A7) -1948 ECW-4
-779 ECW-4
LSC 269-118-4
TYP. (9) PLACES
-775 ECW-4
(A7) LSC 269-
-1151 ECW-4
LSC 330-490
-780 ECW-4
-776 ECW-4
(A7)
LDW 280-28123 (R
(A7)
(A7) -1950 ECW-4
(B1)
-781 ECC-6
LSC 330-208
-782 ECC-6
(A7) LSC 269-148
LSC 269-199-
LSC 269-118-

VIEW LKG AFT

01/02 NAS 9-1100

30 29 28 27

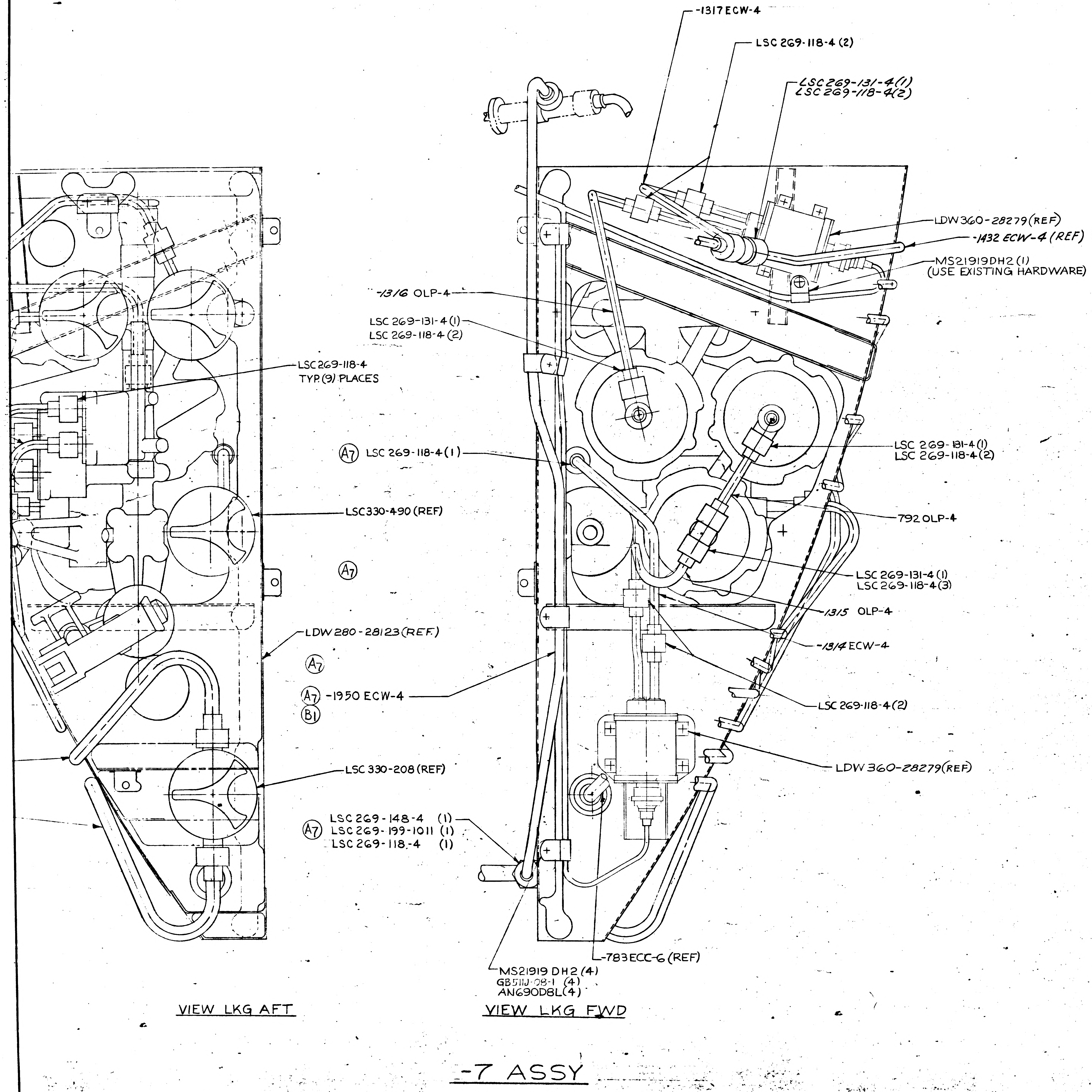
-1317 ECW-4
LSC 269-118-4 (2)
LSC 269-131-4 (1)
LSC 269-118-4 (2)
LDW 360-28279 (REF)
-1432 ECW-4 (REF) (A3)
MS21919DH2 (1)
(USE EXISTING HARDWARE)
-1316 OLP-4
LSC 269-131-4 (1)
LSC 269-118-4 (2)
LSC269-118-4
TYP. (9) PLACES
(A7) LSC 269-118-4 (1)
LSC 269-131-4 (1)
LSC 269-118-4 (2)
LSC330-490 (REF)
792 OLP-4
(A7)
LSC 269-131-4 (1)
LSC 269-118-4 (3)
-1315 OLP-4
LDW 280-28123 (REF.)
-1314 ECW-4
(A7)
(A7) -1950 ECW-4
(B1)
LSC 269-118-4 (2)
LDW 360-28279 (REF)
LSC 330-208 (REF)
(A7) LSC 269-148-4 (1)
LSC 269-199-1011 (1)
LSC 269-118-4 (1)
-783 ECC-6 (REF)
MS21919 DH2 (4)
GB511J-08-1 (4)
AN690D8L (4)
VIEW LKG AFT
VIEW LKG FWD

-7 ASSY

02/02 NAS 9-1100

LDW280-52353 B

MANUFACTURING OPERATIONS

UNLESS OTHERWISE SPECIFIED
NOTES CHECKED √ APPLY TO THIS DWG.

PART NUMBER AND ALL OTHER MARKINGS IN REGION MARKED ⊠ USE BOTH SIDES IF NECESSARY.

FILLET AND INSIDE CORNER RADII TOLERANCES
.016R TO .062R ± .010
.063R TO .250R ± .015
OVER .250R ± .030

DEPTH SHOWN FOR TAPPED HOLES IS FULL THDS. 2-3 IMP THDS. BEYOND PERMISSIBLE.

EXTERNAL THREAD LENGTH SHOWN INCLUDES 2 IMPERFECT THREADS MAX.

DO NOT CADMIUM PLATE & PAINT HOLES OR SURFACES MARKED WITH DOUBLE ASTERISK.

MISMATCH STEP OF ± .005 PERMISSIBLE DUE TO CHANGE OF CUTTERS AT INSIDE INTERSECTING SURFACES.

DIAMETERS MARKED MUST BE CONCENTRIC WITHIN FULL INDICATOR READING

HOLES MUST BE KEPT FREE OF CHROME PLATING SOLUTION.

ALL DIMENSIONS SHOWN TO BE MET AFTER CADMIUM PLATING. THICKNESS OF PLATE .0003 MIN. TO .0005 MAX. MIN. THICKNESS TO BE .0002 ON THREADED AREAS. NO ALLOWANCE FOR PLATING IN HOLES

125 √ SURFACE ROUGHNESS INCLUDING REAMED HOLES PER MIL-STD-10

200 √ FOR ALL DRILLED HOLES

REMOVE ALL BURRS. BREAK ALL EDGES .015-.031

INSPECTION INFORMATION MINIMUM PERMISSIBLE AVERAGE EDGE DISTANCE MARKED IS

SYMBOL √ DENOTES SURFACE TO BE MACHINED

UNLESS OTHERWISE SPECIFIED TOLERANCE ON FLANGES IS ± 1/32

LENGTHS OF AN, NAS & MS AL ALY RIVETS SHORTER THAN 1 INCH ARE NOT SPECIFIED.

TOLERANCE ON LOFTED DELINEATIONS IS

DWG SIZE 34 X

PRINTING INFO ONLY
FULL SIZE SHEET AREA (36 X)=
1/2 SIZE SHEET AREA (1/4 OF FULL)=
SQ. FT.
SQ. FT.

PRINT TRIM LINE

LDW280-52353 B

GRUMMAN AIRCRAFT ENGRG CORP., BETHPAGE, L. I., NEW YORK

SIZE	CODE IDENT NO.		
J	26512	LDW280-52353	B

MODEL OR END ITEM
SCALE FULL
SHEET 6

(B)

THIS IS AN ORIGINAL DRAWING

*

GRUMMAN AIRCRAFT ENGINEERING CORP.
CODE IDENT NO. 26512
ENGINEERING ORDER

ENG 32.1 REV 3-65

DWG. NO. LEO 280-
EO NO. 314
CONTROL INFO NO. LDW280-A2087

ON SH 3 OF THE FOLLOWING DWGS

DWG No.	CHG NO	DWG No.	CHG NO	DWG NO	CHG NO
✓ LDW280-52350	A2	LDW280-52354	A4	LDW280-52358	A1
✓ 52351	A2	-52355	A2	-52359	A3
✓ 52352	A1	-52356	A1	LDW 280-52360	A2
✓ LDW 280-52353	A1	LDW280 - 52357	B2		

ADD THE FOLLOWING NOTE

‡ SUBSTITUTION OF NAS1132V*, AN525-832R* OR AN525-832-* BOLTS FOR THE GB511J-08-* BOLT IS PERMISSIBLE

‡ USE NEXT AVAILABLE NUMBER.

THIS IS A RE-ISSUE OF LEO 280-314 ~ INCOMPLETE CHANGE NO'S ON ORIG ISSUE

(5)

DETAIL SPEC REQ		CL II ENGRG CHG		CL I ENGRG CHG	

REASON FOR EO: HARDWARE NOT AVAILABLE

DESCRIPTION OF EO: ON SH 3 ADDED NOTE ‡ (‡)

GAEC EO RELEASE: 10/17

MODEL	PROCURING ACTIVITY NO.	GAEC UNIT NO.	SUB CONTR UNIT NO.
LM		LM-2 (32)	

DRAWING CHANGE REQD: REVISE DWG ✓ | RECORD EO

DISPOSITION OF PARTS: REWORK NOT | SCRAP REQD

APPROVED BY	VDI	SUPPORT	RELIAB. GROUP	GROUP LEADER	STRESS GROUP	LIAISON ENGRG	PROJ ENGRG	
	JW	—	—	—	EW			
✓ DATE	10-11-66				10-12		10-12-66	10/15/66

PRIORITY: C
DRAWING TITLE: LINES INSTALLATIONS
DRAWING NO: LEO - 280-
EO NO. 314

ISSUED BY C.H. COHEN X7033
SECTION EQUIP LINES (VDI)
GROUP NO. 332
PL 35

01

NAS 9-1100

GRUMMAN AIRCRAFT ENGINEERING CORP.
CODE IDENT NO. 26512
ENGINEERING ORDER *

ENG 32.1 REV 3-66

DWG. NO. LDW280-52353		EO NO A2	
CONTROL INFO NO. LDW280A-3374			

ADD GENERAL NOTE *:
ALL LSC269-119-4, -5 & -6 JAM NUTS SHALL BE LOCKWIRED IN ACCORDANCE WITH MS33540, USING MS20995F32 LOCKWIRE.

* USE NEXT AVAILABLE NOTE No. 5

DETAIL SPEC REQ		CL II ENGRG CHG		CL I ENGRG CHG										
REASON FOR EO				DESCRIPTION OF EO									®	GAEC & EO RELEASE
TO PROVIDE NOTE FOR LOCKWIRING INFO				IN GENERAL NOTES ADDED NOTE *									DE	11/15
MODEL	EFFECTIVITY			DRAWING CHANGE REQD		DISPOSITION OF PARTS		APPROVED BY	JW	—	—	—	CW	
	PROCURING ACTIVITY NO.	GAEC UNIT NO.	SUB CONTR UNIT NO.	✓		✓		DATE	11/15/66				11/15/66	
LM		LM-2(32)		REVISE DWG	RECORD EO	REWORK	SCRAP	5	VDI	SUPPORT	RELIAB GROUP	GROUP LEADER	STRESS GROUP	LIAISON ENGRG
				PRIORITY C	DRAWING TITLE LINES INSTALLATION ENVIRONMENTAL CONTROL							DRAWING NO LDW280-52353		

RMc	11-15-66	PROJ ENGRG
	11-15-66	~~GOVT~~
EO NO. A2		

ISSUED BY DAN. CAROLEO EX:7033 SECTION EQUIP. LINES/(VDI) GROUP NO. 332 PL 35

01 NAS 9-1100

ENG 33.2 10-63 * **GRUMMAN AIRCRAFT ENGINEERING CORP.**
CODE IDENT NO. 26512
ENGINEERING ORDER

D LOW 280-52353 | EO NO. A3
CON INFO NO. LOW280A-3099

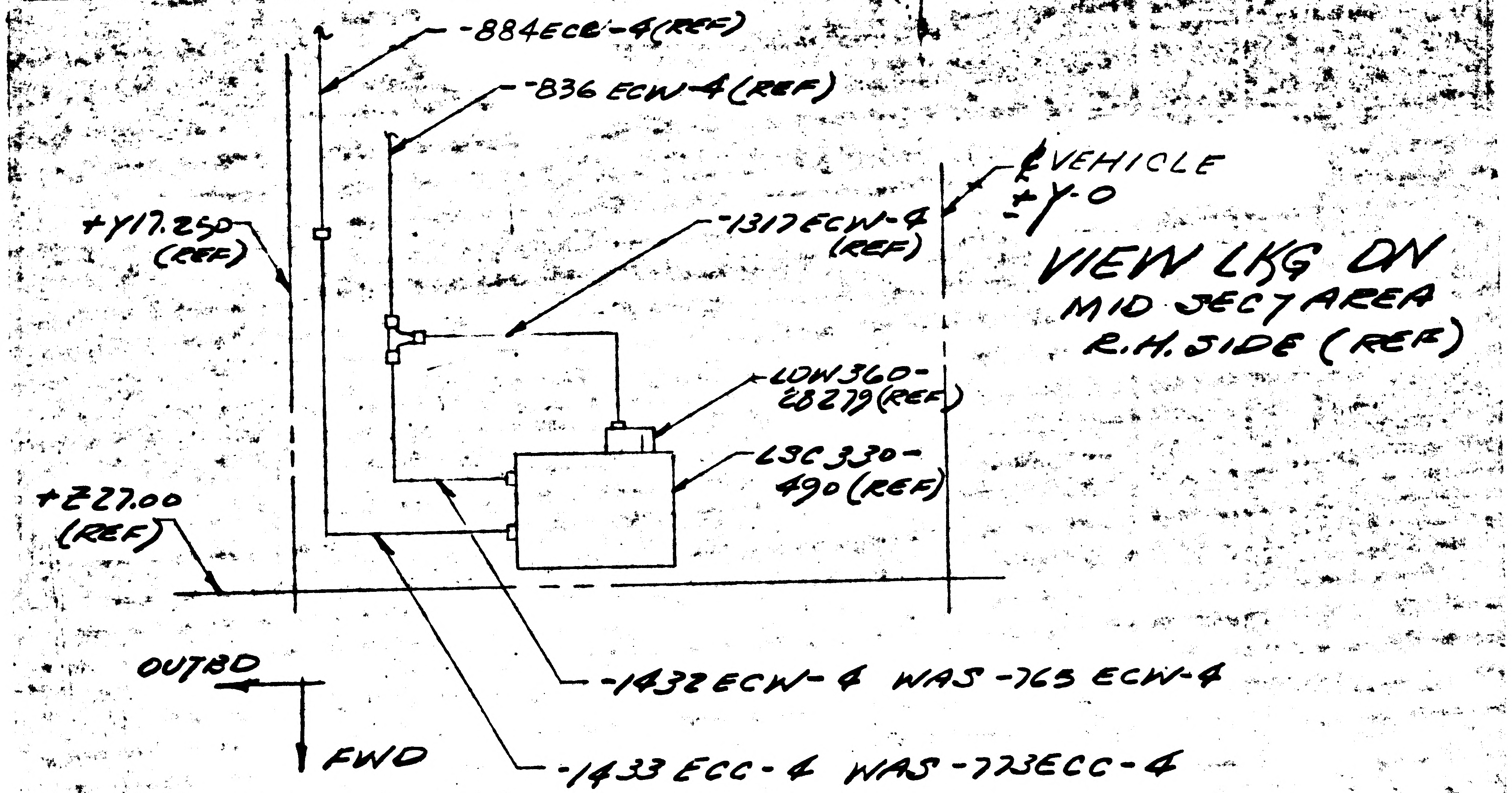
-884ECC-4(REF)
-836 ECW-4(REF)
℄VEHICLE ±Y-0
+Y17.250 (REF)
-1317ECW-4 (REF)
VIEW LKG DN MID SECT AREA R.H. SIDE (REF)
LDW360-28279(REF)
LSC330-490(REF)
+Z27.00 (REF)
OUTBD
FWD
-1432ECW-4 WAS -765 ECW-4
-1433 ECC-4 WAS -773ECC-4

ON SH 6.00 ZONE 29C REVISE LINE #3 AS SHN ABOVE:
-1432 ECW-4 WAS -765 ECW-4
-1433 ECC-4 WAS -773 ECC-4

ZONE 26C REVISE C/O -1432ECW-4 (REF) WAS -765 ECW-4.

ZONE 30C REVISE C/O -1432 ECW-4(REF) WAS -765 ECW-4 (REF) & -1433 ECC-4 (REF) WAS -773 ECW-4 (REF)

ON SH 5.00 ZONE 18B REVISE C/O -1432 ECW-4 (REF) WAS -765 ECW-4(REF) & -1433 ECC-4 WAS -773 ECC-4 (REF)

ON SH 2.00 B/M ON-1 & -3 LINES INSTL WAS LINES ASSY

2.02 B/M ON-7 LINES ASSY, -1432 ECW-4 WAS -765 ECW-4. & -1433 ECC-4 WAS -773 ECC-4; -773 ECC-4 WAS SHN ON -5 ASSY

DETAIL SPEC REQ		CL II ENGRG CHG	✓	CL I ENGRG CHG					9

REASON FOR EO	DESCRIPTION OF EO	GAEC C EO RELEASE
LINE CHG REQD TO CLEAR UMBILICAL HOSES	NOTED ABOVE	ER 11/19/66

MODEL	EFFECTIVITY: PROCURING ACTIVITY NO.	GAEC UNIT NO.	SUB CONTR UNIT NO.	DRAWING CHANGE REQD: REVISE DWG	RECORD EO	DISPOSITION OF PARTS: REWORK	SCRAP
LM		LM-2 (32)		✓		✓	

APPROVED BY	JW	—	—	—	CW		PMC	
DATE	11/2/66				11/15/66		11-17-66	11/17/66
1	VDI	RELIAB. GROUP	GROUP LEADER	STRESS GROUP	LIAISON ENGRG	PROJ ENGRG		

PRIORITY	DRAWING TITLE	DRAWING NO	EO NO.
C	LINES INSTL ENVIRONMENTAL CONTROL SUBSYSTEM INTERNAL M/S	LDW280-52353	A3

ISSUED BY N. NIELSEN 7033 11-7-66 GROUP EQ. LINES GROUP 332 PL 35

01 NAS 9-1100

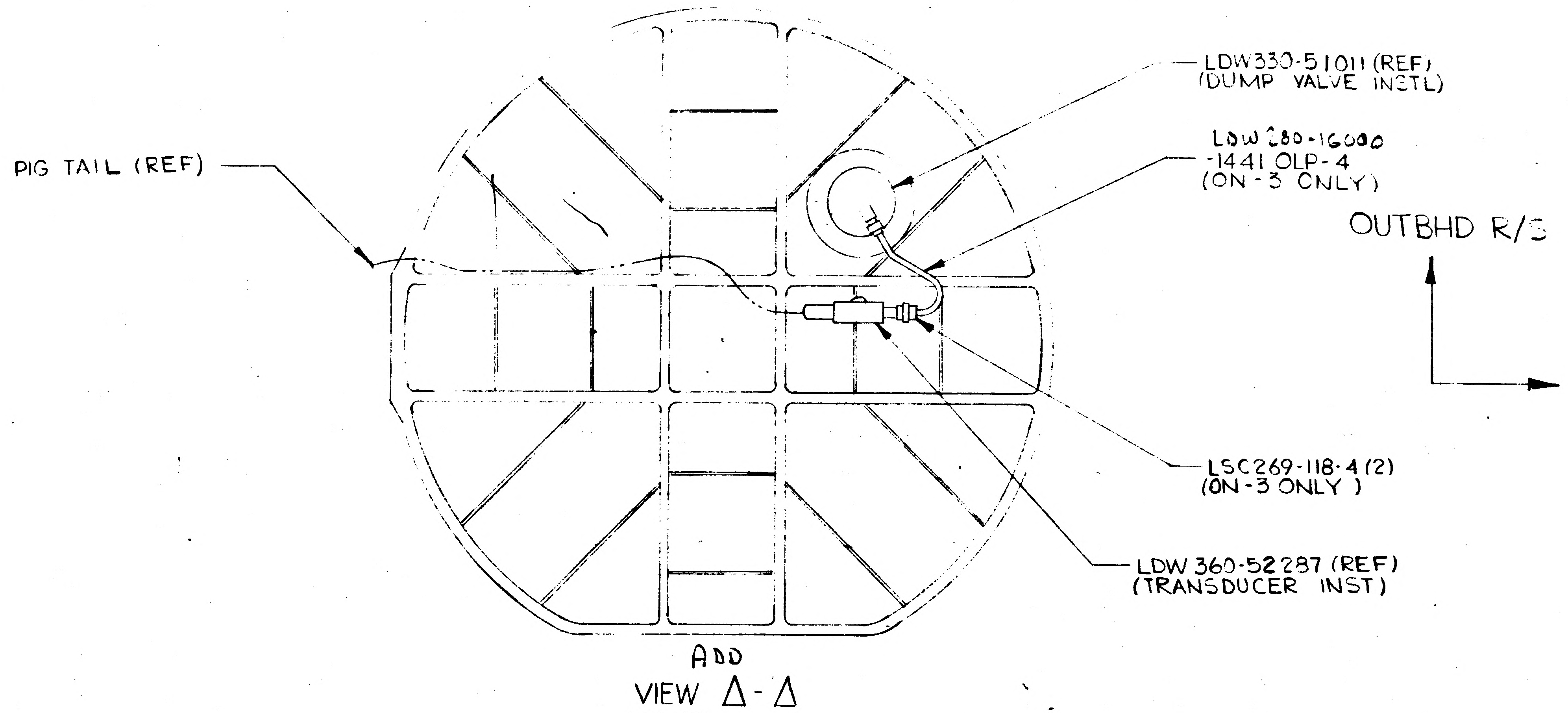
LDW330-51011 (REF)
(DUMP VALVE INSTL)
LDW 280-16000
-1441 OLP-4
(ON -3 ONLY)
OUTBHD R/3
FWD
PIG TAIL (REF)
LSC269-118-4 (2)
(ON -3 ONLY)
LDW 360-52287 (REF)
(TRANSDUCER INST)

ADD
VIEW Δ-Δ
(ZONE - -)
SCALE NONE
LKG UP AT DOCKING HATCH

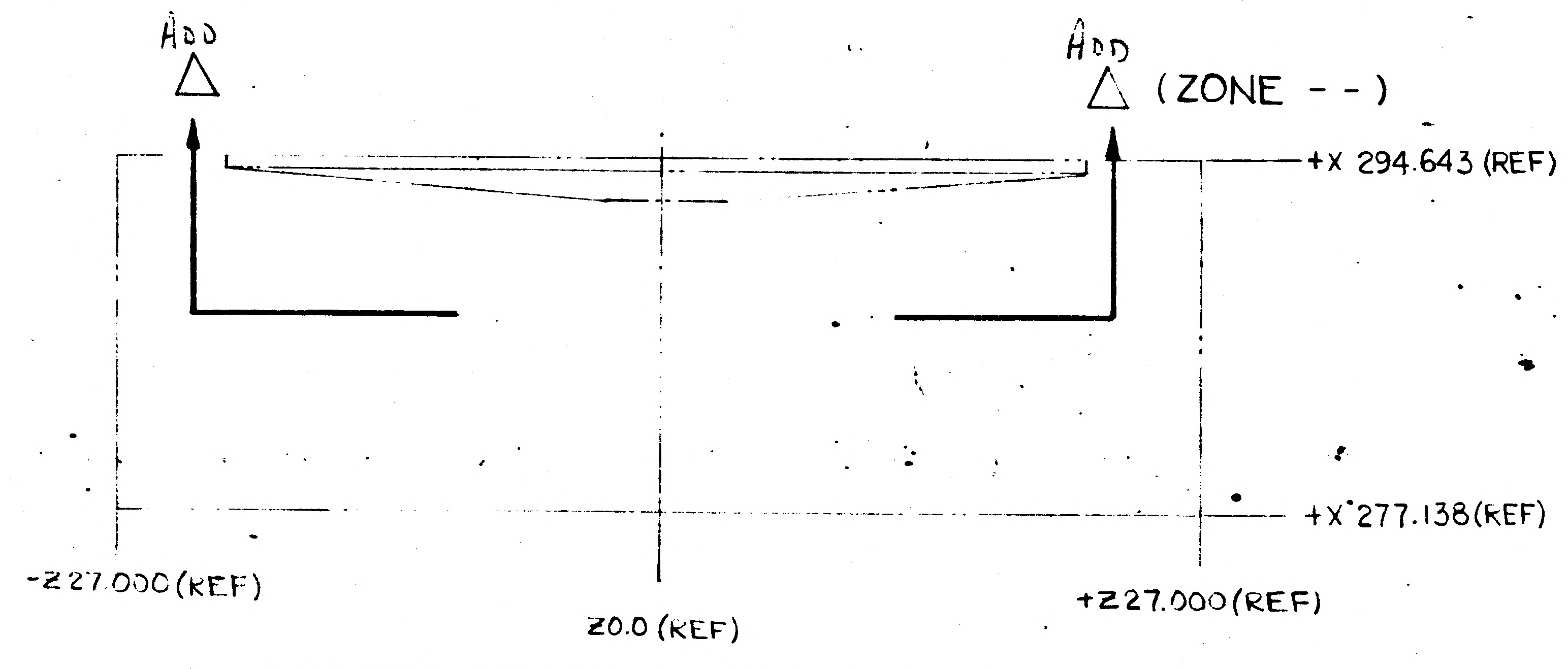
ADD
Δ
ADD
Δ (ZONE - -)
+X 294.643 (REF)
+X 277.138 (REF)
-Z 27.000 (REF)
Z0.0 (REF)
+Z 27.000 (REF)

LDW280-52353-3 INSTALLATION
VIEW LKG OUTBD-LH SIDE (SH 3 ZONE B3)

~~THIS VIEW SHOWN, ADD SECTIONAL~~
~~CUT AND DETAIL OF SECTION~~
~~TO SHOW TUBE INSTALLATION~~
~~THIS VIEW ON SHEET 3 (ZONE B3)~~

IN FIELD OF DRAWING (AS SHOWN)
AND B/M ADD:
LDW280-16000-1441OLP-4. LINE
AND LSC269-118-4 (2), SEALS
(ON -3 INSTALLATION)

Δ : USE NEXT AVAILABLE SECTION LETTER

NAS 9-1100

5

DETAIL SPEC REQD		CLASS II ENGRG CHG		CLASS I ENGRG CHG				CONTROL INFO NO LDW280A5093		
REASON FOR EO TO ADD VIEW OF DOCKING HATCH, OXYGEN LINE INSTL				DESCRIPTION OF EO FOR -3 INSTL IN F/D & B/M ADDED VIEW Δ-Δ, LDW280-16000-1441OLP-4 LSC269-118-4 (2)						GRUMMAN EO RELEASE 2/1/67
MODEL	EFFECTIVITY PROCURING ACT NO	GAEC UNIT NO	SUB CONTR UNIT NO	DRAWING REVISION REQD ✓ REVISE DWG	RECORD EO	DISPOSITION OF PARTS ✓ REWORK	SCRAP	BY / DATE 1/31/67 VDI	— SUPPORT	— RELIAB GROUP
								1-31-67 GROUP LEADER	STRESS GROUP	LIAISON ENGRG
								2-1-67 PROJ ENGR	~~GOVT~~	
LM		LM-2 (32)		PRIORITY C	DRAWING TITLE LINES INSTALLATION ENVIRONMEMTAL CONTROL SUB-SYSTEM INTERNAL MID-SECTION			ENGINEERING ORDER DRAWING NO LDW280-52353		EO NO A4

EX: 7033

ISSUED BY DAN. CAROLEO SECTION EQUIP. LNES/VDI GROUP NO 332 PL 35

CODE IDENT NO 26512

GRUMMAN AIRCRAFT ENGINEERING CORP
BETHPAGE L I N Y

ENG 32 3 REV 3 65

B

ENG 32.1 REV 3-65

GRUMMAN AIRCRAFT ENGINEERING CORP.
CODE IDENT NO. 26512
83
ENGINEERING ORDER

DWG. NO. LDW280-52353
EO NO. A5
CONTROL INFO NO. LDW280A-7194

ON-5 ASSY

(ADD) IN B/M & F/D LDW280-16079-1 (1 REQD)

(WAS) LDW280P16217-1 (1 REQD)

IN GENERAL NOTES:
NOTE #5: SUBSTITUTION ----AND GC12H FOR GB511J CLAMPS ---
S/B SUBSTITUTION ----AND GC12H OR AN742D FOR GC500J CLAMPS---

DETAIL SPEC REQ		CL II ENGRG CHG	✓	CL I ENGRG CHG		LCD 19-1288A 5

REASON FOR EO: EXISTING MATL UNACCEPTABLE

DESCRIPTION OF EO: SEE ABOVE

Ⓡ GAEC EO RELEASE C JK 5/29/7

MODEL	PROCURING ACTIVITY NO.	GAEC UNIT NO.	SUB CONTR UNIT NO.
LM		LM 2 (32)	

DRAWING CHANGE REQD: REVISE DWG ✓ RECORD EO ☐

DISPOSITION OF PARTS: REWORK ✓ SCRAP ☐

APPROVED BY	Jap			JW					
DATE	5/25/67			4/5/67	5.25		5/26/67	5/27/67	
1	VDI	SUPPORT	RELIAB. GROUP	GROUP LEADER	STRESS GROUP	LIAISON ENGRG	PROJ ENGRG	GOVT	

PRIORITY: C

DRAWING TITLE: LINES INSTL - ENVIRONMENTAL CONTL INTERNAL MID-SECTION

DRAWING NO.: LDW280-52353

EO NO.: A5

ISSUED BY L. BALDASSIN x 1392 SECTION EQUIP LINES/VDI GROUP NO. 332 PL 25

01

NAS 9-1100

C *

GRUMMAN AIRCRAFT ENGINEERING CORP.
CODE IDENT NO. 26512
ENGINEERING ORDER

ENG 32.1 REV 3-65

DWG. NO. LDW280 52353
EO NO. A6
CONTROL INFO NO. LM5-13551

REVISE NOTE 5 SHEET 3 TO READ

SUBSTITUTION OF NAS 1132V OR AN525-8 FOR GB511J BOLT AND GC12H FOR GC500J CLAMP IS PERMISSIBLE

WAS

SUBSTITUTION OF NAS1132V OR AN525-8 FOR GB511J BOLT AND GC12H FOR GB511J CLAMP IS PERMISSIBLE

RELEASED BY LIAISON

DETAIL SPEC REQ	☐	CL II ENGRG CHG	☑	CL I ENGRG CHG	☐

REASON FOR EO: DWG ERROR

DESCRIPTION OF EO: REVISED NOTE 5 GC500J CLAMP WAS GB511J CALLOUT

GAEC EO RELEASE: VC 5

MODEL	EFFECTIVITY: PROCURING ACTIVITY NO.	GAEC UNIT NO.	SUB CONTR UNIT NO.
LM		LM2(32)	

DRAWING CHANGE REQD: REVISE DWG ✓ RECORD EO

DISPOSITION OF PARTS: REWORK ✓ SCRAP

	VDE	SUPPORT	RELIAB. GROUP	GROUP LEADER	STRESS GROUP	LIAISON ENGRG	PROJ ENGRG	~~GOVT~~
APPROVED BY	WT			~	JF	EMB	WPC	
DATE	6/22/67			~	6-22-67	6/22/67	6/27	6/28/67

PRIORITY: C

DRAWING TITLE: LINES INSTALLATION ENVIRONMENT CONTROL SUBSYS INTERNAL MID SECT

DRAWING NO. LDW280-52353

EO NO. A6

ISSUED BY E ROSADO x1508

SECTION EQUIP LINES

GROUP NO. 332

PL 5

01
NAS 9-1100

B *

ENG 33.2 REV 3-66

GRUMMAN AIRCRAFT ENGINEERING CORP.

CODE IDENT NO. 26512

ENGINEERING ORDER

DWG. NO. LDW280-52353 EO NO. A1

CONTROL INFO NO. LDW280A-6892

ON -7 ASSY IN F/D & B/M REMOVE LDW280-16000-784ECW-4, -1948 ECW-4 WAS -778ECW-4, ADD LDW280-16000-1950 ECW-4 TUBE ASSY (1), LSC269-131-4 (1) TEE, LSC269-118-4 (3) SEAL, LSC269-199-1011 (1) SEAL, LSC269-148-4 (1) ADAPTER, REMOVE LSC269-118-4 (1)
ON -1 INSTL IN F/D & B/M ADD LDW280-16000-1949ECW-4 (1) TUBE ASSY, LSC269-118-4(2) SEAL

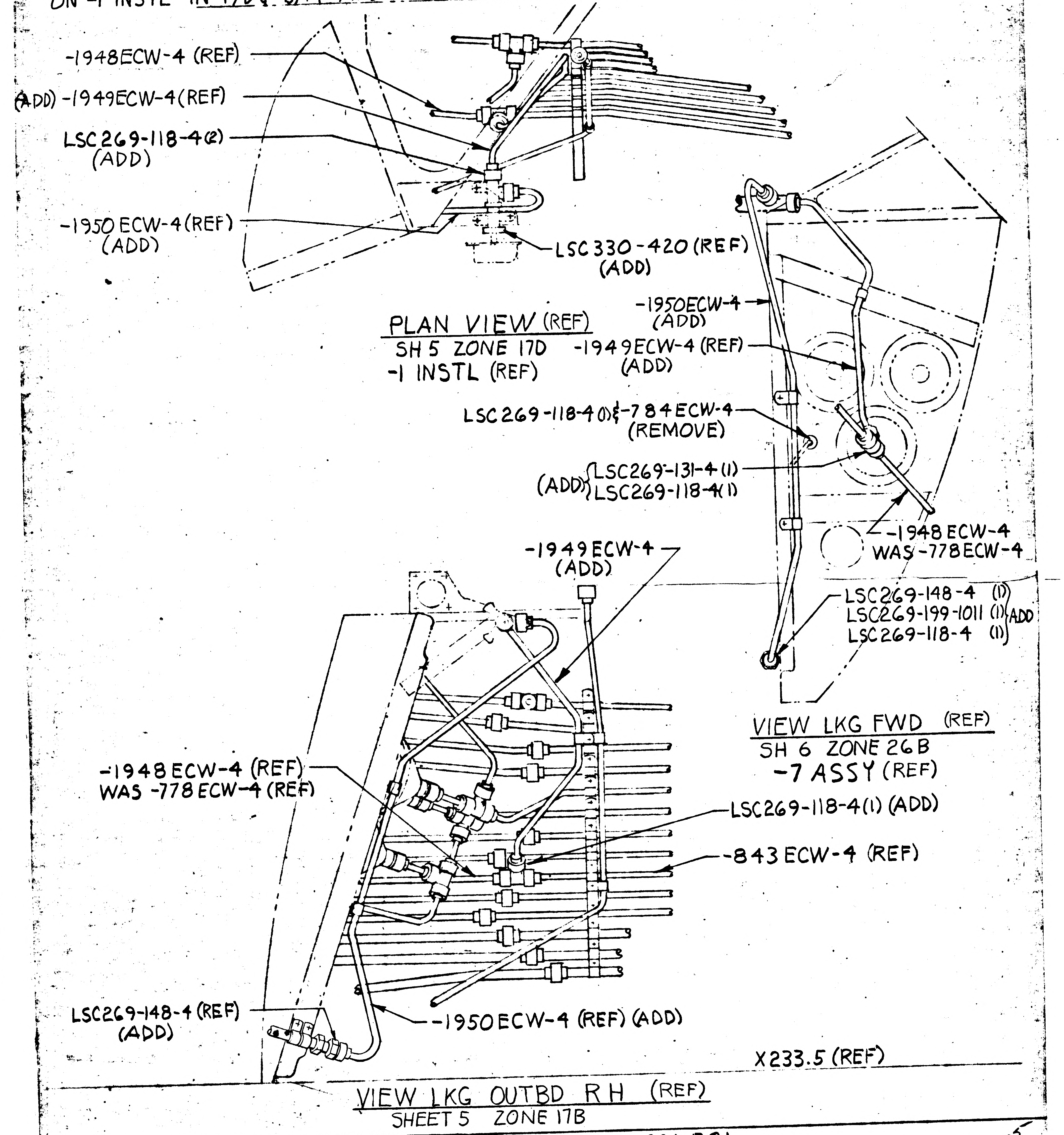
-1948ECW-4 (REF)
(ADD) -1949ECW-4(REF)
LSC269-118-4(2) (ADD)
-1950 ECW-4(REF) (ADD)
LSC330-420 (REF) (ADD)
PLAN VIEW (REF)
SH 5 ZONE 17D
-1 INSTL (REF)
-1950ECW-4 (ADD)
-1949ECW-4 (REF) (ADD)
LSC269-118-4(1) & -784ECW-4 (REMOVE)
(ADD) LSC269-131-4(1) LSC269-118-4(1)
-1948 ECW-4 WAS -778ECW-4
LSC269-148-4 (1) LSC269-199-1011 (1) LSC269-118-4 (1) ADD
VIEW LKG FWD (REF)
SH 6 ZONE 26B
-7 ASSY (REF)
-1949 ECW-4 (ADD)
-1948 ECW-4 (REF) WAS -778 ECW-4 (REF)
LSC269-118-4(1) (ADD)
-843 ECW-4 (REF)
LSC269-148-4 (REF) (ADD)
-1950ECW-4 (REF) (ADD)
X233.5 (REF)
VIEW LKG OUTBD RH (REF)
SHEET 5 ZONE 17B

DETAIL SPEC REQ		CL II ENGRG CHG		CL I ENGRG CHG	✓	LCD 1429 CCA 581	Ⓡ GAEC EO RELEASE C 5

REASON FOR EO: TO PROVIDE HIGH PRESSURE WATER TO PLSS HOSE

DESCRIPTION OF EO: NOTED

JK 6/27/7

EFFECTIVITY: MODEL	PROCURING ACTIVITY NO.	GAEC UNIT NO.	SUB CONTR UNIT NO.
LM		LM-2 (32)	

DRAWING CHANGE REQD		DISPOSITION OF PARTS	
REVISE DWG	RECORD EO	REWORK	SCRAP
✓		✓	

APPROVED BY	JaP			gw	CW			
DATE	6/19/67			6/17/67	6/20/67		6/21	6/27/67
	VDI	SUPPORT	RELIAB GROUP	GROUP LEADER	STRESS GROUP	LIAISON ENGRG	PROJ ENGRG	

PRIORITY: C

LINES INSTL TUNNEL

DRAWING TITLE: ECS A/S

DRAWING NO.: LDW280-52353

EO NO.: A1

ISSUED BY HUGH RYAN X1392 6-15-67 SECTION VDI(EQUIP LINES) GROUP NO. 332 25

01
NAS 9-1100

ENG 32.2 REV 3-65

GRUMMAN AIRCRAFT ENGINEERING CORP.
CODE IDENT NO. 26512
ENGINEERING ORDER

DWG. NO. LDW 280-52353	EO NO. A8
CONTROL INFO NO. LDW 280A 7408	

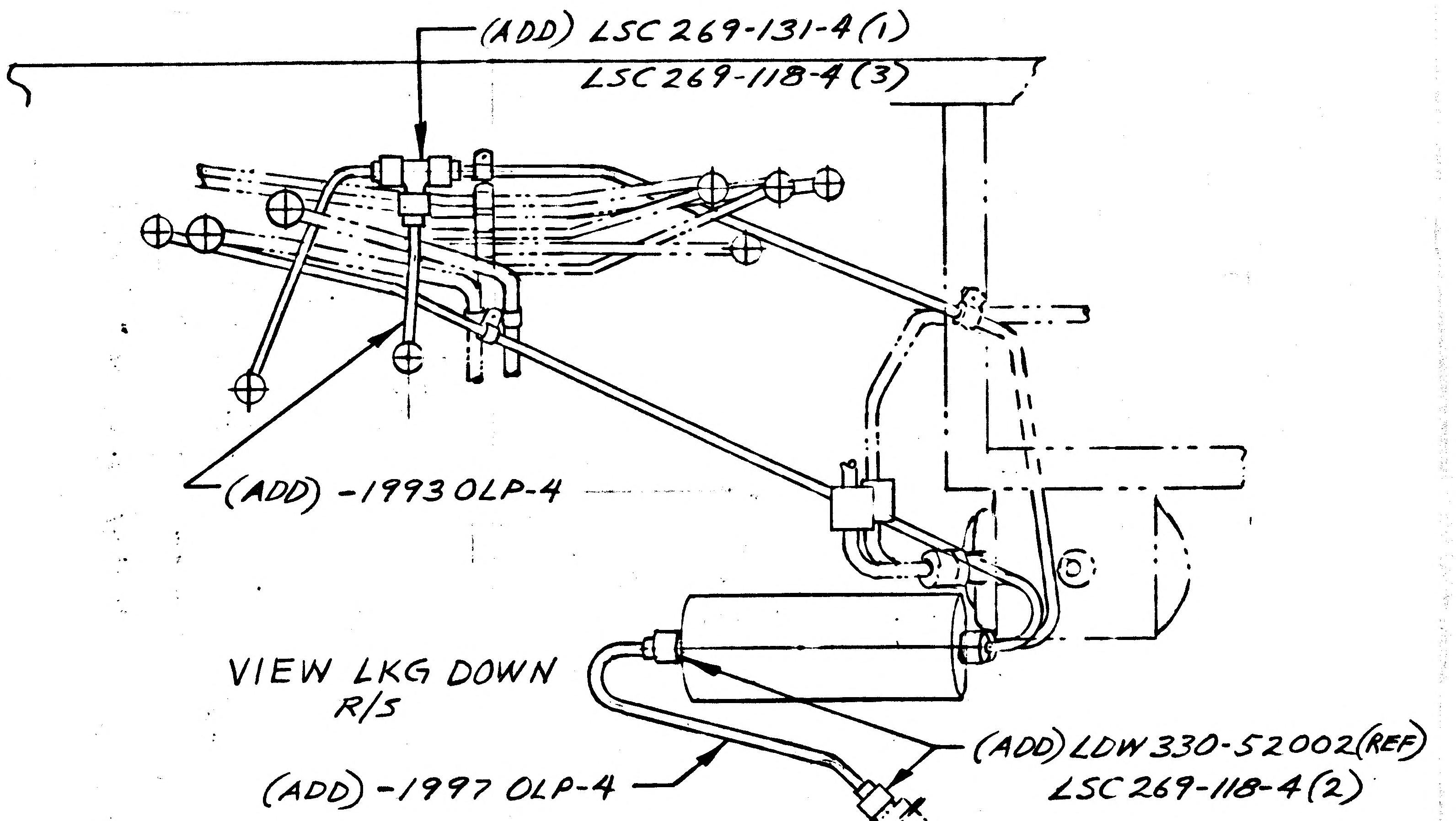
(ADD) LSC 269-131-4(1)
LSC 269-118-4(3)
(ADD) -1993 OLP-4
(ADD) -1997 OLP-4
(ADD) LDW 330-52002(REF)
LSC 269-118-4(2)

VIEW LKG DOWN
R/S

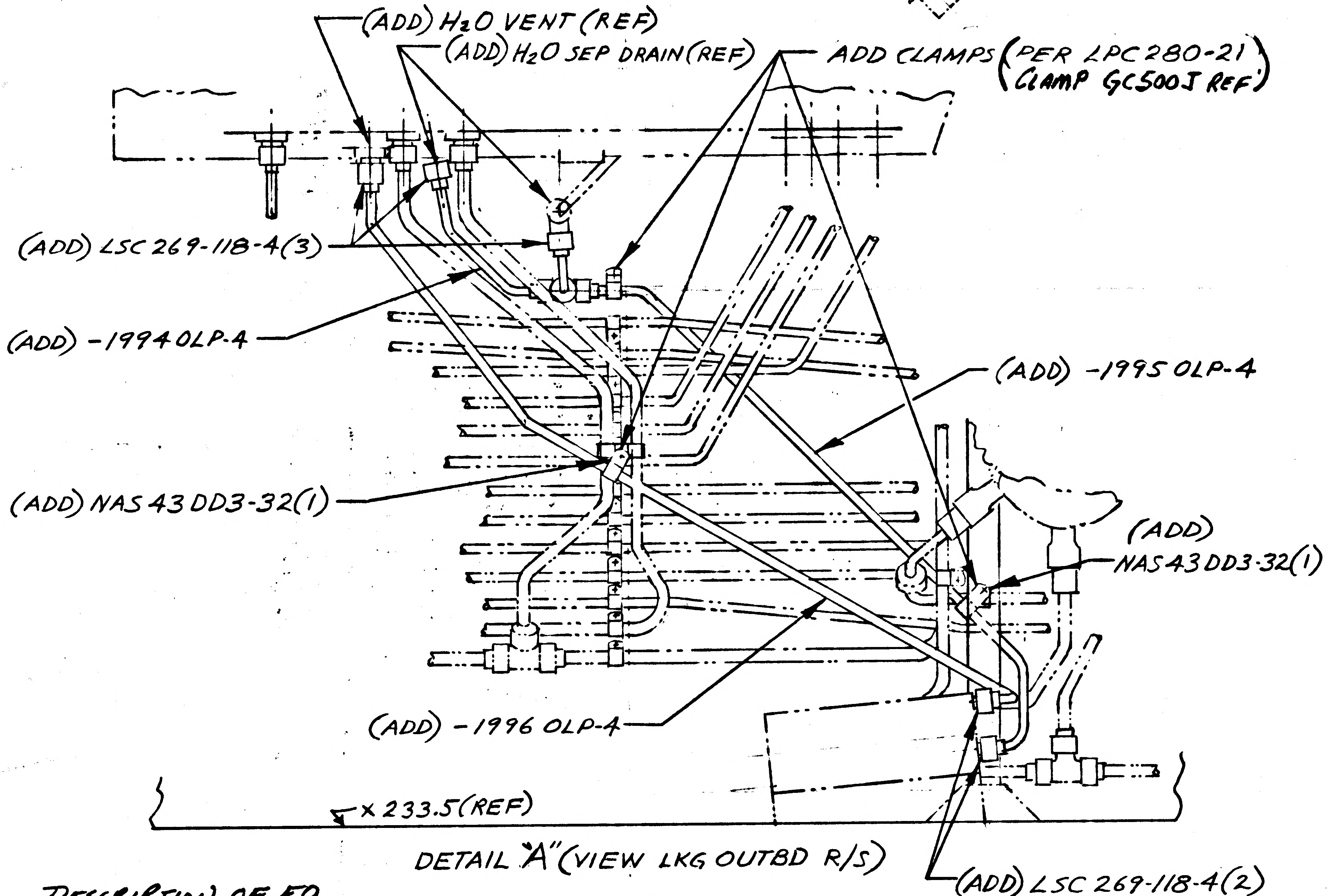
(ADD) H2O VENT (REF)
(ADD) H2O SEP DRAIN (REF)
ADD CLAMPS (PER LPC 280-21) (CLAMP GC500J REF)
(ADD) LSC 269-118-4(3)
(ADD) -1994 OLP-4
(ADD) -1995 OLP-4
(ADD) NAS 43 DD3-32(1)
(ADD) NAS 43 DD3-32(1)
(ADD) -1996 OLP-4
x 233.5 (REF)
(ADD) LSC 269-118-4(2)

DETAIL "A" (VIEW LKG OUTBD R/S)

DESCRIPTION OF EO
IN F/D REVISE VIEW LKG DWN R/S & DETAIL "A" (VIEW LKG OUTBD R/S)
ON -1 INSTL IN F/D & B/M (ADD) LDW 280-16000-1993 OLP-4, -1994 OLP-4, -1995 OLP-4, -1996 OLP-4
-1997 OLP-4 TUBE ASSY (1) EA, LSC 269-131-4(1) TEE, LSC 269-118-4(10) SEAL, NAS 43DD3-32(2)
ADDED LDW 330-52002(REF), H_2O VENT(REF) H_2O SEP DRAIN(REF)

DETAIL SPEC REQ		CL II ENGRG CHG	✓	CL I ENGRG CHG		LCD 1516

REASON FOR EO	DESCRIPTION OF EO	GAEC EO RELEASE
TO PROVIDE LINES INSTL FOR WATER ACCUMULATOR	SEE ABOVE	JK 6/30/67

MODEL	EFFECTIVITY			DRAWING CHANGE REQD		DISPOSITION OF PARTS		APPROVED BY								
	PROCURING ACTIVITY NO.	GAEC UNIT NO.	SUB CONTR UNIT NO.	REVISE DWG	RECORD EO	REWORK	SCRAP	DATE	6/27 VDI	SUPPORT	RELIAB. GROUP	GROUP LEADER	STRESS GROUP	LIAISON ENGRG	PROJ ENGRG	GOVT
LM		LM-2 (32)		✓		✓						JW 6/27/67	ZW 6/29/67		6/28	Bott 6-29-67

PRIORITY	DRAWING TITLE	DRAWING NO.	EO NO.
C	LINES INSTL - ENVIRONMENTAL CONTL INTERNAL MID SECTION	LDW 280-52353	A8

ISSUED BY L. BALDASSIN X1153 SECTION EQUIP LINES GROUP NO. 332 PL 25

01 NAS 9-1100

B

ENG 32.2 REV 3-66

GRUMMAN AIRCRAFT ENGINEERING CORP.
CODE IDENT NO. 26512
ENGINEERING ORDER

DWG. NO.	LDW280-52353	EO NO.	A9
CONTROL INFO NO.	LDW 280A-7078		

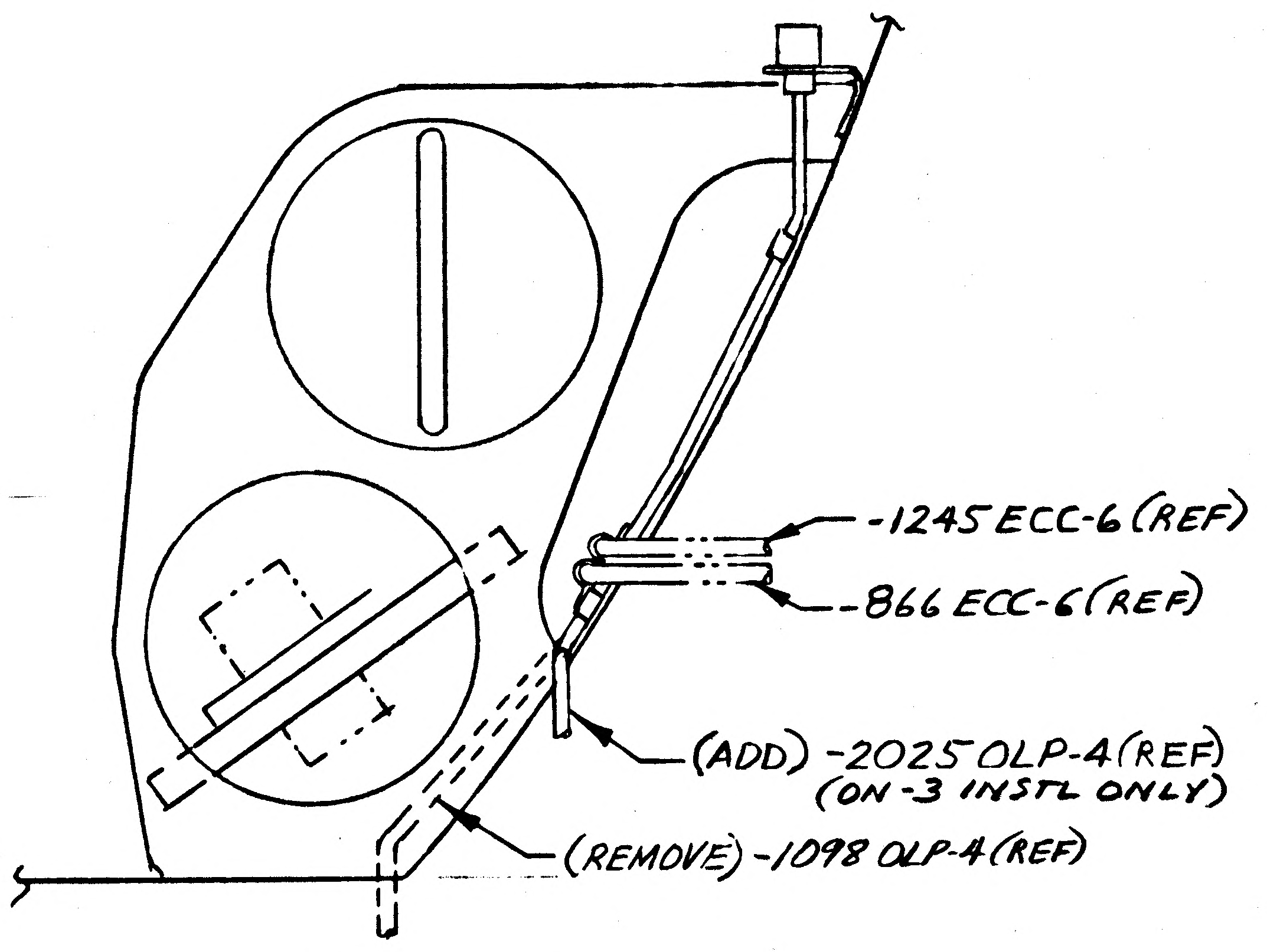
-1245 ECC-6 (REF)
-866 ECC-6 (REF)
(ADD) -2025 OLP-4 (REF) (ON -3 INSTL ONLY)
(REMOVE) -1098 OLP-4 (REF)

VIEW M-M
(REF)

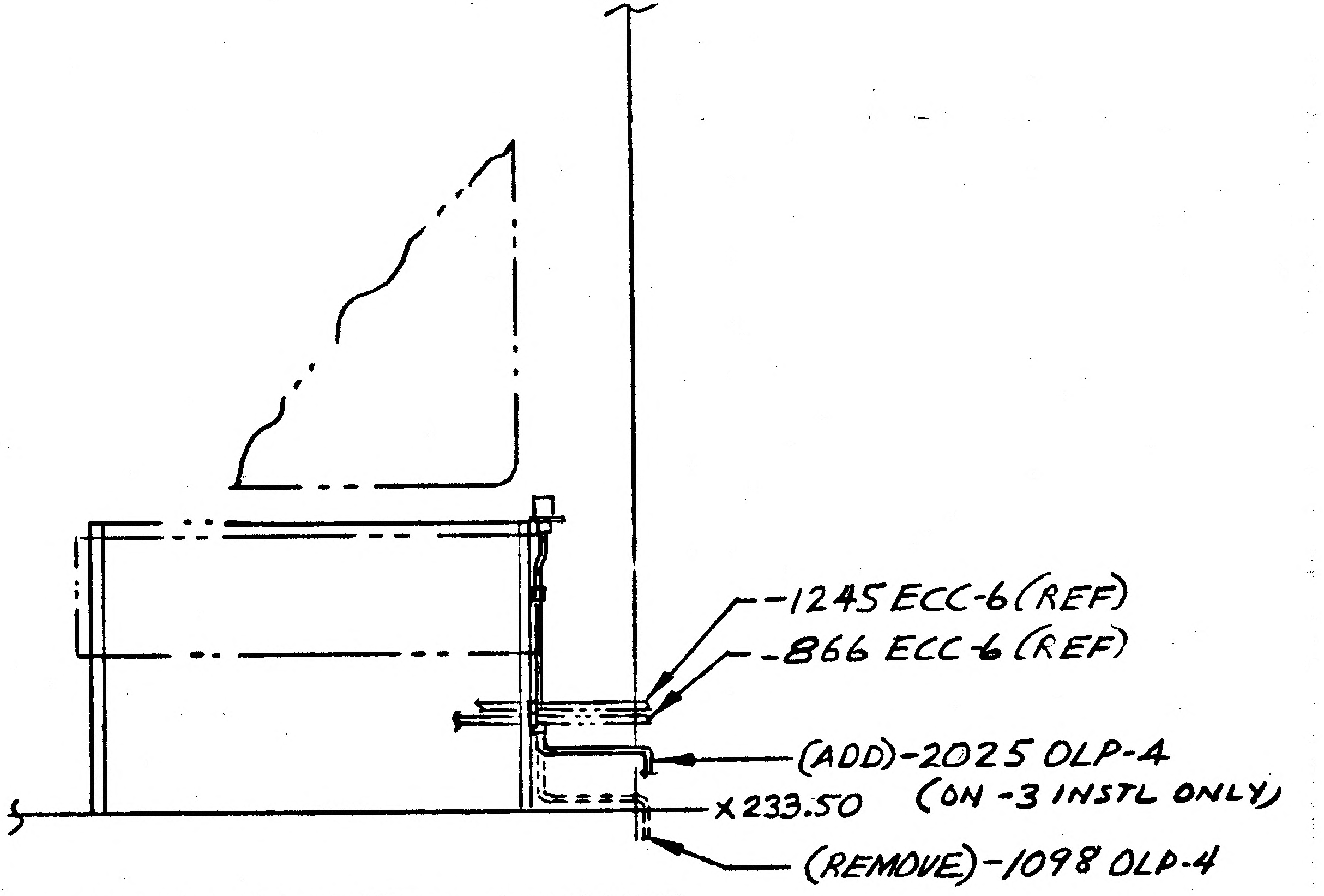
+227
-1245 ECC-6 (REF)
-866 ECC-6 (REF)
(ADD)-2025 OLP-4 (ON -3 INSTL ONLY)
X233.50
(REMOVE)-1098 OLP-4

VIEW LKG OUTBD LEFTSIDE
(REF)

NOTE: ALL LINE NO'S ARE DASH NO'S OF LDW 280-16000

DETAIL SPEC REQ ☐ CL II ENGRG CHG ☑ CL I ENGRG CHG ☐ LCD 1552

REASON FOR EO: CORRECTION OF EQUIPMENT PHYSICAL HAZARDS

DESCRIPTION OF EO: IN F/D & B/M ON -3 INSTL, -2025 OLP-4 (WAS) -1098 OLP-4 CORRECTED PICTURE IN VIEW M-M & VIEW LKG OUTBD L.S -2025 OLP-4(REF)(WAS)-1098 OLP-4(REF)

GAEC EO RELEASE: JL 7-14

MODEL	PROCURING ACTIVITY NO.	GAEC UNIT NO.	SUB CONTR UNIT NO.
LM		LM-2 (32)	

DRAWING CHANGE REQD: REVISE DWG	RECORD EO	DISPOSITION OF PARTS: REWORK	SCRAP
✓		✓	

		SUPPORT	RELIAB. GROUP	GROUP LEADER	STRESS GROUP	LIAISON ENGRG	PROJ ENGRG	
APPROVED BY	WPB			JW				
DATE	7/11/67			7/10/67	7-12		7/12	7-14-67
	YDI							

PRIORITY: C

DRAWING TITLE: LINES INSTL-ENVIRONMENTAL CONTL INTERNAL MID-SECTION

DRAWING NO.: LDW 280-52353

EO NO.: A9

L. BALDASSIN X1153

SECTION EQUIP LINES GROUP NO. 332 PL 25

B

ENG 32.2 REV 3-65

GRUMMAN AIRCRAFT ENGINEERING CORP.
CODE IDENT NO. 26512
ENGINEERING ORDER

DWG. NO. LDW280-52353		EO NO. A10	
CONTROL INFO NO. LDW280A-8159			

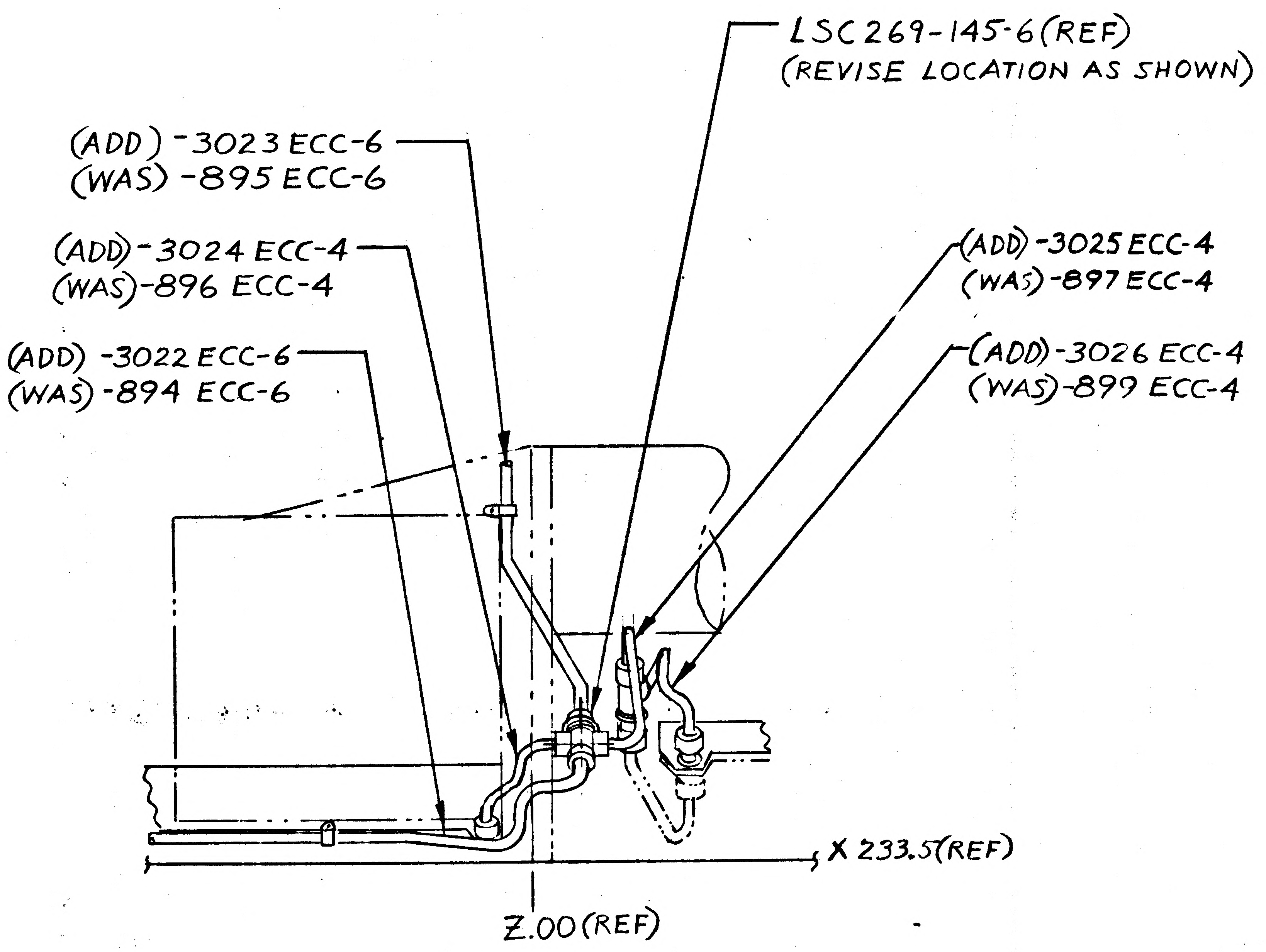
LSC269-145-6 (REF)
(REVISE LOCATION AS SHOWN)
(ADD) -3023 ECC-6
(WAS) -895 ECC-6
(ADD) -3024 ECC-4
(WAS) -896 ECC-4
(ADD) -3022 ECC-6
(WAS) -894 ECC-6
(ADD) -3025 ECC-4
(WAS) -897 ECC-4
(ADD) -3026 ECC-4
(WAS) -899 ECC-4
X 233.5 (REF)
Z.00 (REF)

VIEW LKG OUTBD LEFT SIDE (REF)

ON -1 INSTL IN F/D REVISE PICTURE AS SHOWN

NOTE: ALL TUBE ASSY NUMBERS ARE DASH NUMBERS OF LDW 280-16000

DETAIL SPEC REQ	☐	CL II ENGRG CHG	✓	CL I ENGRG CHG	☐	LCD 1903

REASON FOR EO: IMPROVED SERVICING OF DFI STRAIN & TEMP SIGNAL CONDITIONER

DESCRIPTION OF EO: ON-1 INSTL IN B/M & F/D ADDED LDW280-16000-3023 ECC-6 (WAS) -895 ECC-6, -3024 ECC-4 (WAS) -896 ECC-4, -3022 ECC-6 (WAS) -894 ECC-6, -3025 ECC-4 (WAS) -897 ECC-4, -3026 ECC-4 (WAS) -899 ECC-4 & REVISED PICTURE

Ⓡ GAEC EO RELEASE: JK 7/25/7

MODEL	PROCURING ACTIVITY NO.	GAEC UNIT NO.	SUB CONTR UNIT NO.
LM		LM-2 (32)	

DRAWING CHANGE REQD: REVISE DWG	RECORD EO	DISPOSITION OF PARTS: REWORK	SCRAP
✓		✓	

	VDI	SUPPORT	RELIAB. GROUP	GROUP LEADER	STRESS GROUP	LIAISON ENGRG	PROJ ENGRG	GOVT
APPROVED BY	[illegible]			[illegible]	[illegible]		[illegible]	[illegible]
DATE	7/21/67			7/21/67	7/21		7/24	7-25-67

PRIORITY: C

DRAWING TITLE: LINES INSTL - ENVIRONMENTAL CONTL INTERNAL MID SECTION.

DRAWING NO.: LDW280-52353

EO NO.: A10

5 c

7-24-67
ISSUED BY L. BALDASSIN X1392 SECTION EQUIP LINES GROUP NO. 332 PL 25

01 NAS 9-1100

B

ENG 32.1 REV 3-65

GRUMMAN AIRCRAFT ENGINEERING CORP.
CODE IDENT NO. 26512
ENGINEERING ORDER

*

DWG. NO. LDW280-52353		EO NO. B1
CONTROL INFO NO. LDW280A-8195		

THIS EO IS A REVISION OF EO A7
REVISE PICTURE OF ROUTING OF LDW280-16000-1950ECW-4

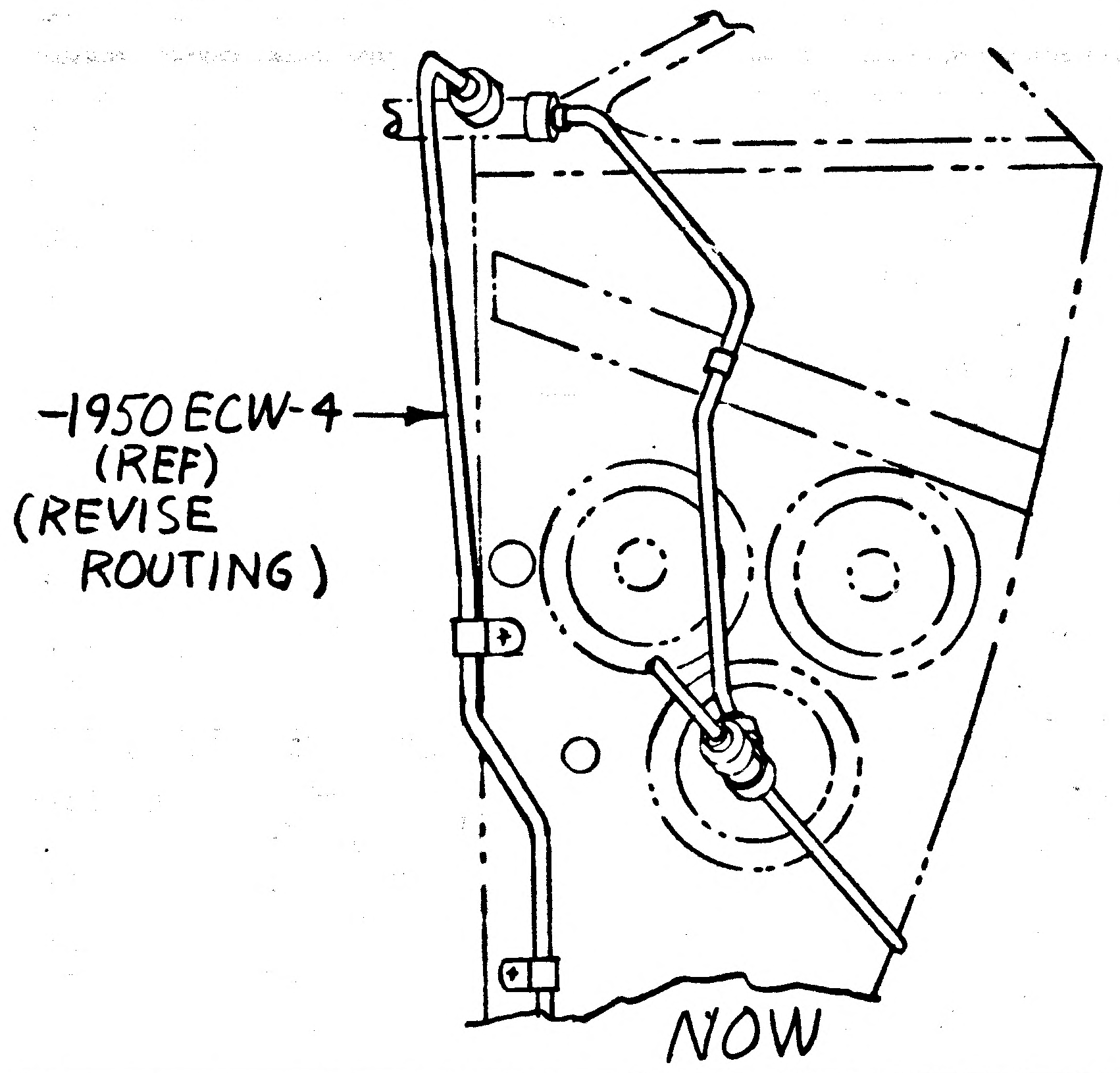

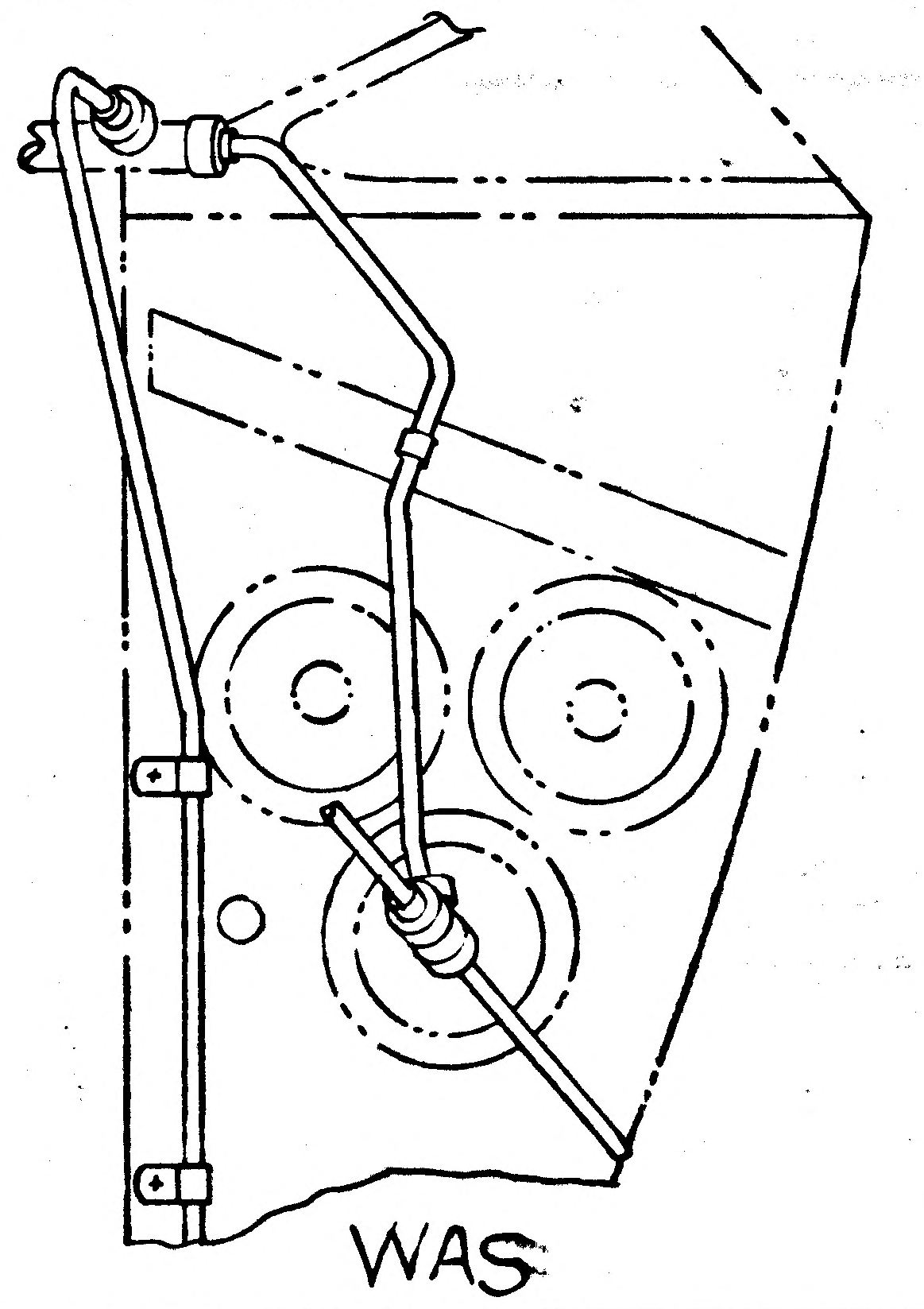

DETAIL SPEC REQ	☐	CL II ENGRG CHG	☐	CL I ENGRG CHG	☒	LCD 1429, CCA 581

5

REASON FOR EO	DESCRIPTION OF EO	Ⓡ GAEC EO RELEASE C
LINE INTERFERENCE	REF EO A7 REVISED PICTURE OF ROUTING OF LDW 280 -16000 -1950 ECW-4	JK 7/26/7

MODEL	EFFECTIVITY: PROCURING ACTIVITY NO.	GAEC UNIT NO.	SUB CONTR UNIT NO.
LM		LM-2 (32)	

DRAWING CHANGE REQD: REVISE DWG	RECORD EO	DISPOSITION OF PARTS: REWORK	SCRAP
✓		✓	

APPROVED BY	Jaf			JW	bw			
DATE	7/24/67			7/24/67	7-24		7/21	7-26-67
	VDI	SUPPORT	RELIAB. GROUP	GROUP LEADER	STRESS GROUP	LIAISON ENGRG	PROJ ENGRG	~~GOVT~~

PRIORITY	DRAWING TITLE	DRAWING NO.	EO NO.
C	LINES INSTL ECS INTERNAL MID-SECTION A/S	LDW280-52353	B1

7/27/67
ISSUED BY HUGH RYAN X1392 7-23-67 SECTION VDI (EQUIP LINES) GROUP NO. 332 PL 25

01

NAS 9-1100

ENG 32.2 REV 3-65

B

GRUMMAN AIRCRAFT ENGINEERING CORP.
CODE IDENT NO. 26512
ENGINEERING ORDER

DWG. NO. LEO280 EO NO. 708
CONTROL INFO NO. LDW280A9103

ADD THE FOLLOWING NOTE * TO THE DRAWINGS LISTED BELOW:

* BONDING TO BE INACCORDANCE WITH LSP 390-001

(* = USE NEXT AVAILABLE NOTE NUMBER)

DRAWING NUMBER	EFFECTIVITY	CHANGE NUMBER
LDW280 - 28363	LM-2(32) THRU LM-15(45)	B2
- 51365	LM-2(32) THRU LM-15(45)	A8
- 51368	LM-2(32)	A9
- 51369	LM-2(32), LM-3(33)	A3
- 52350	LM-2(32)	D7
- 52352		A5
- 52353		B2
- 52355		C1
- 52364		B6
- 52609	LM-2(32)	A5
- 53352	LM-3(33)	A9
- 53353	LM-3(33)	B5
- 53355	LM-3(33)	A1
- 53364	LM-3(33) THRU LM-15(45)	B7
- 53368	LM-3(33)	B7
- 53609	LM-3(33)	A7
- 54352	LM-4(34) THRU LM-15(45)	B6
- 54353		B2
- 54355		B5
LDW 280 - 54609	LM-4(34) THRU LM-15(45)	B7

DETAIL SPEC REQ ☐ CL II ENGRG CHG ☐ CL I ENGRG CHG ☑ LCD 1961 5

REASON FOR EO: TO UPDATE INSTL DWGS TO CURRENT BONDING REQUIREMENTS

DESCRIPTION OF EO: ADDED NOTE *

GAEC C EO RELEASE: 9/12/67

MODEL	PROCURING ACTIVITY NO.	GAEC UNIT NO.	SUB CONTR UNIT NO.
LM		NOTED	

DRAWING CHANGE REQD: REVISE DWG ✓ RECORD EO

DISPOSITION OF PAR'S: NOT REQD (REWORK / SCRAP)

APPROVED BY		SUPPORT	RELIAB. GROUP	GROUP LEADER	STRESS GROUP	LIAISON ENGRG	PROJ ENGRG	
DATE	9/8/67 VDI			9/8/67	9/9/67		9/11/67	9-12-67

PRIORITY: C

DRAWING TITLE: LINES INSTL ELECTRONIC & PIPING ASCENT STAGE & DESCENT STAGE

DRAWING NO. LEO 280

EO NO. 708

9-14-67
ISSUED BY J. DE VITA X1153 (9-7-67) SECTION EQUIP LINES (VDI) GROUP NO. 332 PL 25

01
NAS 9-1100

ENG 32.1 REV 3-65

GRUMMAN AIRCRAFT ENGINEERING CORP.
CODE IDENT NO. 26512
ENGINEERING ORDER

DWG. NO. LEO 280
EO NO. 769
CONTROL INFO NO. LDW280B0076

DELETE NOTE * FROM THE FOLLOWING DWGS

DRAWING NUMBER	EFFECTIVITY	CHANGE NUMBER	NOTE *
LDW280-52353 ✓	LM-2(32)	C1	8
-52354	LM-2(32)	A6	3
-52355	LM-2(32)	D1	8
-52356	LM-2 (32)	A8	5
-52351	LM-2 (32)	A9	5
-52350	LM-2(32)	E1	31
LDW280-52608	LM-2(32)	D2	7

DETAIL SPEC REQ ☐ CL II ENGRG CHG ☐ CL I ENGRG CHG ☑ LCD 1961

5

REASON FOR EO: BONDING NOTE NOT REQD

DESCRIPTION OF EO: DELETED NOTE *

Ⓡ GAEC EO RELEASE C

MODEL	PROCURING ACTIVITY NO.	GAEC UNIT NO.	SUB CONTR UNIT NO.
LM		LM-2(32)	

DRAWING CHANGE REQD: ✓ REVISE DWG / RECORD EO

DISPOSITION OF PARTS: NOT REQD (REWORK / SCRAP)

APPROVED BY								
DATE	10/24/67			10/26/67	10/27/67		10/28/67	10/30/67
E	VDI	SUPPORT	RELIAB. GROUP	GROUP LEADER	STRESS GROUP	LIAISON ENGRG	PROJ ENGRG	

PRIORITY: C
DRAWING TITLE: LINES INSTL PIPING ASCENT STAGE & DESCENT STAGE
DRAWING NO. LEO280
EO NO. 769

11-2-67
ISSUED BY J. DE VITA X1153 (10-25-67)
SECTION EQUIP LINES (VDI)
GROUP NO. 332
PL 25

01

NAS 9-1100

ENG 32.1 REV 3-65

GRUMMAN AIRCRAFT ENGINEERING CORP.
CODE IDENT NO. 26512

ENGINEERING ORDER

DWG. NO. LDW280-52353	EO NO. C2
CONTROL INFO NO. LDW280B-0399	

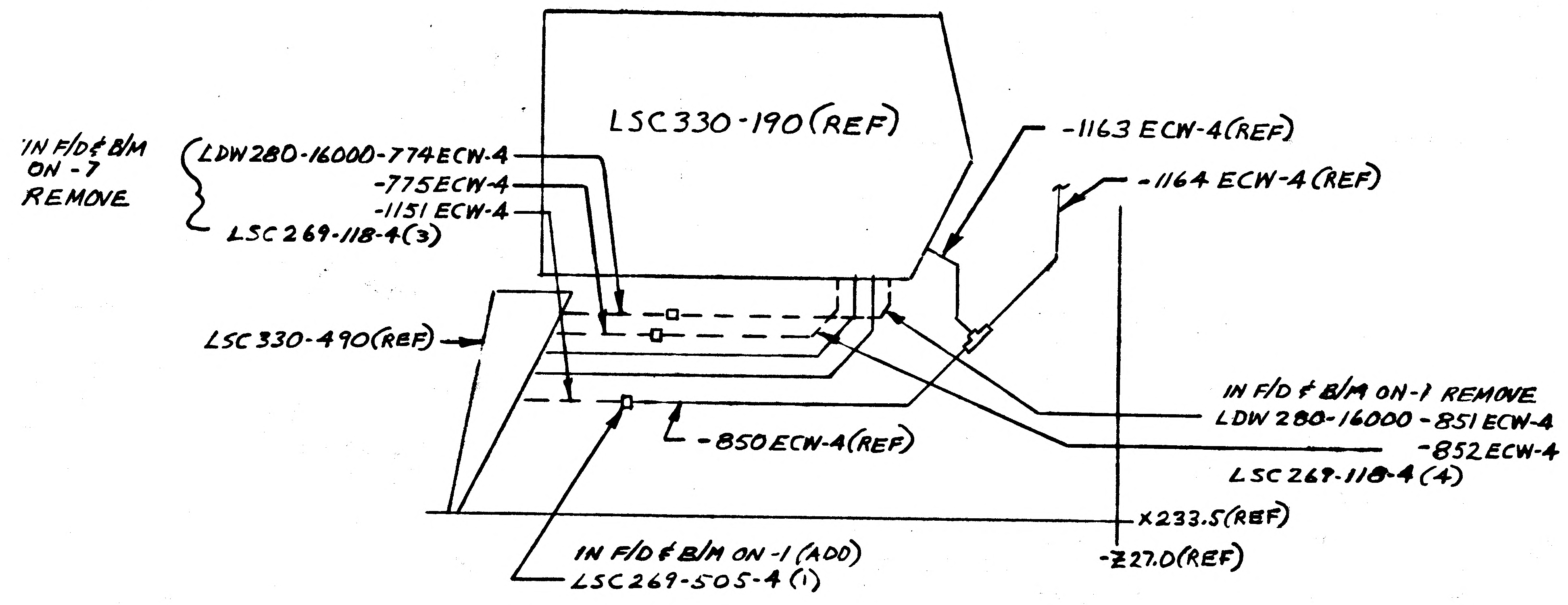

LSC330-190(REF)
IN F/D & B/M ON -7 REMOVE
LDW280-16000-774ECW-4
-775ECW-4
-1151 ECW-4
LSC269-118-4(3)
-1163 ECW-4(REF)
-1164 ECW-4(REF)
LSC330-490(REF)
IN F/D & B/M ON-1 REMOVE
LDW280-16000-851 ECW-4
-852ECW-4
LSC269-118-4(4)
-850ECW-4(REF)
X233.5(REF)
-Z27.0(REF)
IN F/D & B/M ON-1 (ADD)
LSC269-505-4(1)

-1 INSTL DETAIL "A"
SH5 ZONE 16A

CORRECT ALL VIEWS TO AGREE

DETAIL SPEC REQ		CL II ENGRG CHG		CL I ENGRG CHG	✓	LCD 2223 CCA 745

REASON FOR EO: CONVERT LM-2 TO UNMANNED FLIGHT

DESCRIPTION OF EO: ON-1 IN F/D & B/M REMOVED LDW280-16000-851ECW-4, -852ECW-4, LSC269-118-4(4) ADDED LSC269-505-4(1)
ON-7 IN F/D & B/M REMOVED LDW280-16000-774ECW-4, -775ECW-4, -1151ECW-4, LSC269-118-4(3)

GAEC EO RELEASE

MODEL	EFFECTIVITY: PROCURING ACTIVITY NO.	GAEC UNIT NO.	SUB CONTR UNIT NO.
LM		LM-2 (32)	

DRAWING CHANGE REQD: REVISE DWG	RECORD EO	DISPOSITION OF PARTS: REWORK	SCRAP
✓		✓	

APPROVED BY		SUPPORT	RELIAB. GROUP	GROUP LEADER	STRESS GROUP	LIAISON ENGRG	PROJ ENGRG	
DATE	11/30/67			11/30/67	12/1/67 CW		11/30/67	12-4-67
A	VDI							

PRIORITY	DRAWING TITLE	DRAWING NO.	EO NO.
C	LINES INSTL - ENVIRONMENTAL CONT'L INTERNAL MID-SECT	LDW280-52353	C2

12/4
ISSUED BY L. BALDASSIN X1392 SECTION EQUIP LINES GROUP NO. 332 PL 25

01

NAS 9-1100

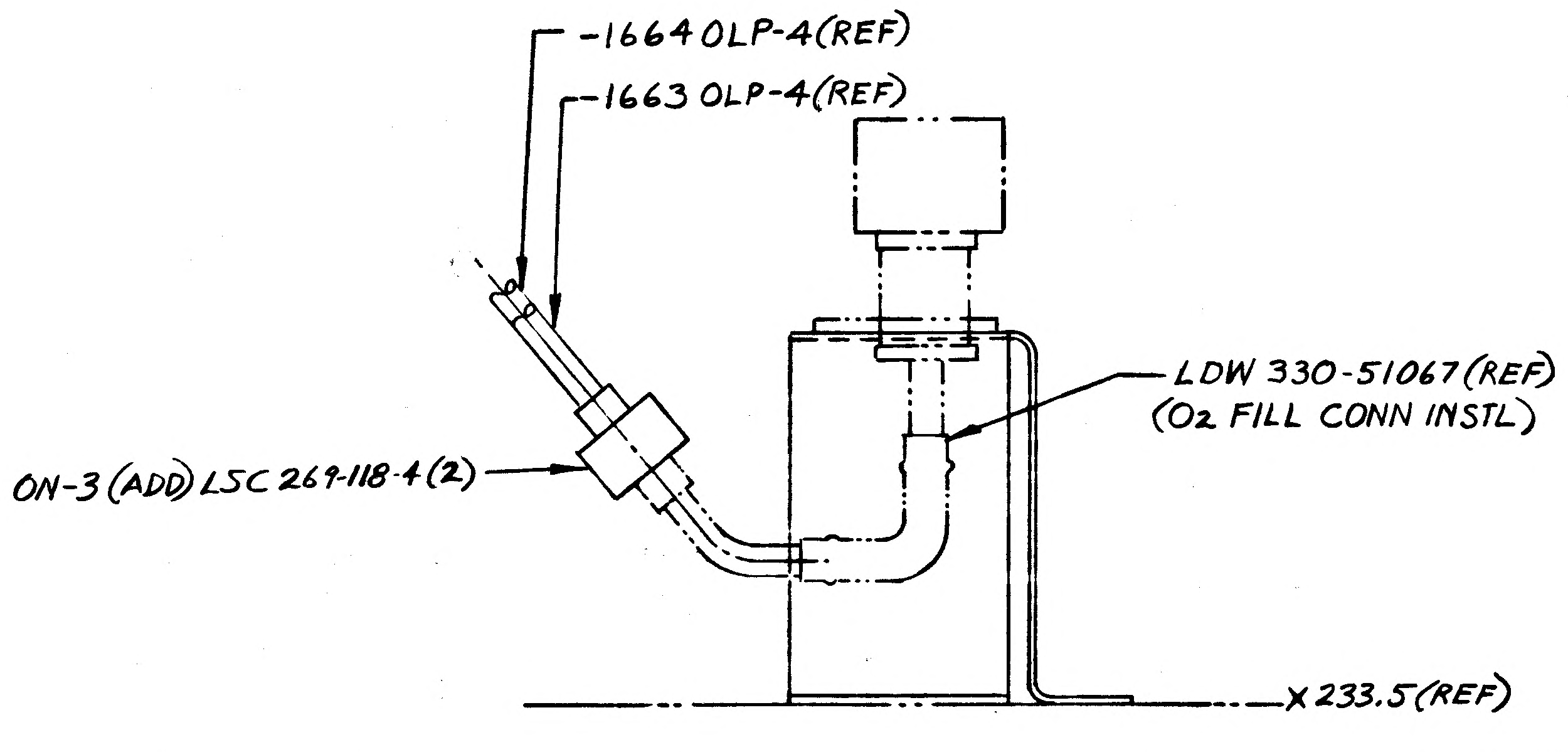
-1664 OLP-4(REF)
-1663 OLP-4(REF)
LDW 330-51067(REF)
(O2 FILL CONN INSTL)
ON-3 (ADD) LSC 269-118-4(2)
X233.5(REF)

(ADD) SECTION ✱-✱
-3 INSTL ONLY

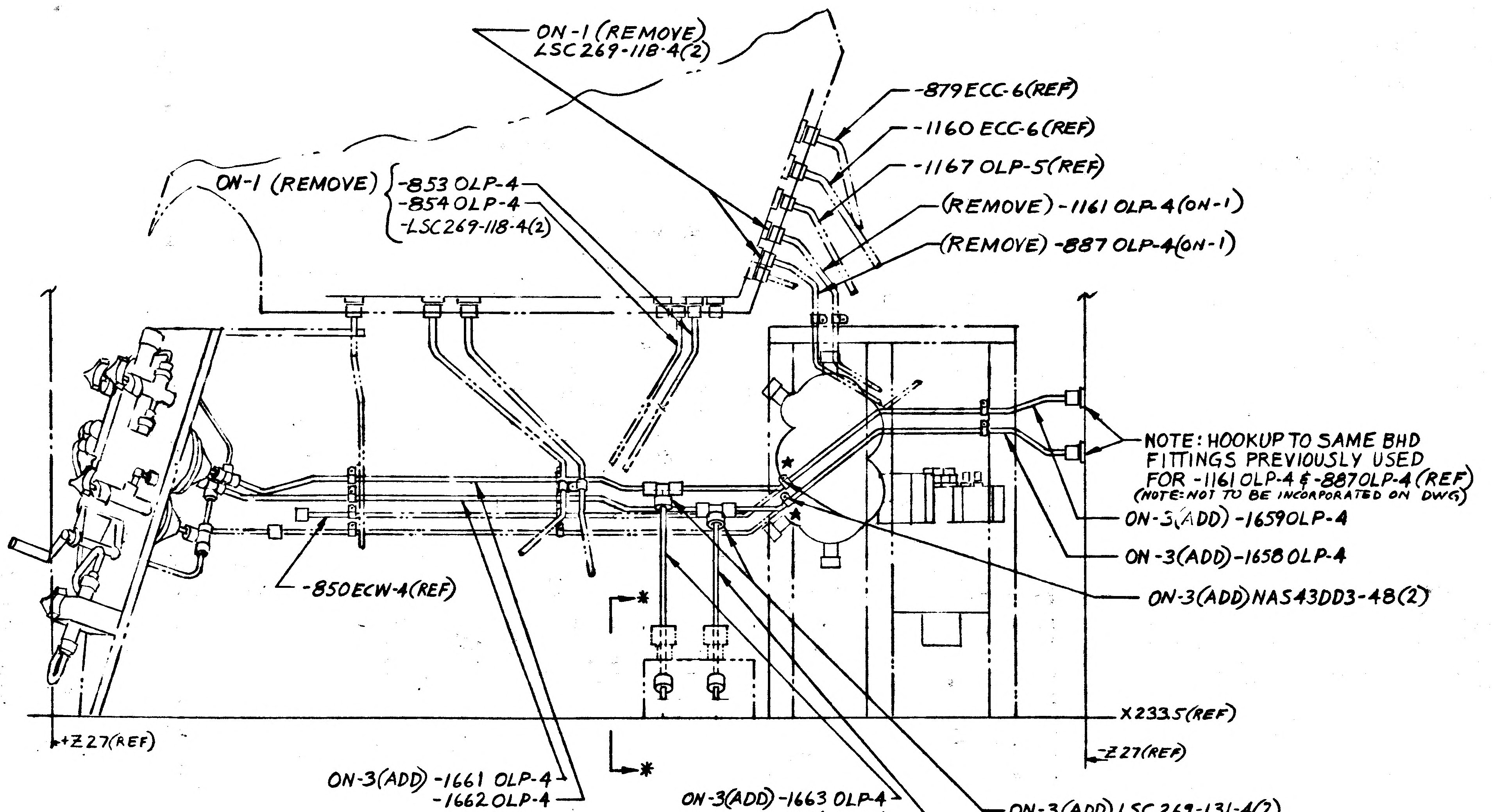
ON-1 (REMOVE)
LSC 269-118-4(2)
-879 ECC-6(REF)
-1160 ECC-6(REF)
-1167 OLP-5(REF)
(REMOVE) -1161 OLP-4(ON-1)
(REMOVE) -887 OLP-4(ON-1)
ON-1 (REMOVE) {-853 OLP-4 -854 OLP-4 -LSC 269-118-4(2)
NOTE: HOOKUP TO SAME BHD FITTINGS PREVIOUSLY USED FOR -1161 OLP-4 & -887 OLP-4 (REF)
(NOTE: NOT TO BE INCORPORATED ON DWG)
ON-3(ADD) -1659 OLP-4
ON-3(ADD) -1658 OLP-4
ON-3(ADD) NAS43DD3-48(2)
-850 ECW-4(REF)
X233.5(REF)
Z27(REF)
Z27(REF)
ON-3(ADD) -1661 OLP-4 -1662 OLP-4
ON-3(ADD) -1663 OLP-4 -1664 OLP-4
ON-3(ADD) LSC 269-131-4(2) LSC 269-118-4(6)

DETAIL "A"
SH 5 ZONE 16A

NOTE:
1. ✱ INSTALL GC500J-D4T CLAMPS PER LPC 280-21
2. CORRECT ALL VIEWS IN F/D TO AGREE WITH VIEW ON E.O.
3. ALL TUBE DASH NO'S ARE DASH NO'S OF LDW 280-16000

PRINTING INFO ONLY
FULL SIZE SHEET AREA 30X42 = 8.75 SQ FT
1/2 SIZE SHEET AREA = 2.19 SQ FT

DESCRIPTION OF E.O.

ON-1 INSTL REMOVED LDW280-16000-887 OLP-4, -853 OLP-4, -854 OLP-4
-1161 OLP-4, LSC 269-118-4 (4)
CORRECTED OTHER VIEWS TO AGREE
ON-3 INSTL ADDED LDW 280-16000-1658 OLP-4, -1659 OLP-4, -1661 OLP-4, -1662 OLP-4,
-1663 OLP-4, -1664 OLP-4, LSC 269-131-4(2) LSC 269-118-4(8) NAS 43DD3-48(2)
ADDED CLAMPS GC500J-D4T PER LPC 280-21(2) & SECTION ✱ ✱ (SEE NOTE) TO -3 INSTL

DETAIL SPEC REQD		CLASS II ENGRG CHG		CLASS I ENGRG CHG	✓	LCD 2223 CCA 745							CONTROL INFO NO.	LDW 280 B 0740
REASON FOR EO CONVERSION OF LM-2 FOR UNMANNED FLIGHT					DESCRIPTION OF EO NOTED ABOVE								GRUMMAN EO RELEASE JK 12/8/67	
MODEL	EFFECTIVITY PROCURING ACT. NO.	GAEC UNIT NO.	SUB CONTR UNIT NO.		DRAWING REVISION REQD		DISPOSITION OF PARTS		BY					
LM		LM-2 (32)			✓		✓		DATE 12/7/67			11/16/67	11/7/67	12/7/67 / 12-8-67
					REVISE DWG	RECORD EO	REWORK	SCRAP	A VD1	SUPPORT	RELIAB GROUP	GROUP LEADER	STRESS GROUP	LIAISON ENGRG / PROJ ENGR
					PRIORITY C	DRAWING TITLE LINES INSTALLATION-ENVIRONMENTAL CONTROL SUBSYSTEM-TUNNEL					ENGINEERING ORDER DRAWING NO. LDW 280-52353			EO NO. C3
12/8 ISSUED BY L.BALDASSIN		SECTION EQUIP LINES		GROUP NO. 332	PL 25	CODE IDENT NO. 26512		GRUMMAN AIRCRAFT ENGINEERING CORP BETHPAGE, L. I., N. Y.						

ENG 32.3 REV 3-65

01 NAS 9-1100

RELEASED BY LIAISON

GRUMMAN AIRCRAFT ENGINEERING CORP.
CODE IDENT NO. 26512
ENGINEERING ORDER

DWG. NO.	LDW280-52353	EO NO.	C4
CONTROL INFO NO.	LM5-13779		

THIS EO REVISES EO C3
ON-3

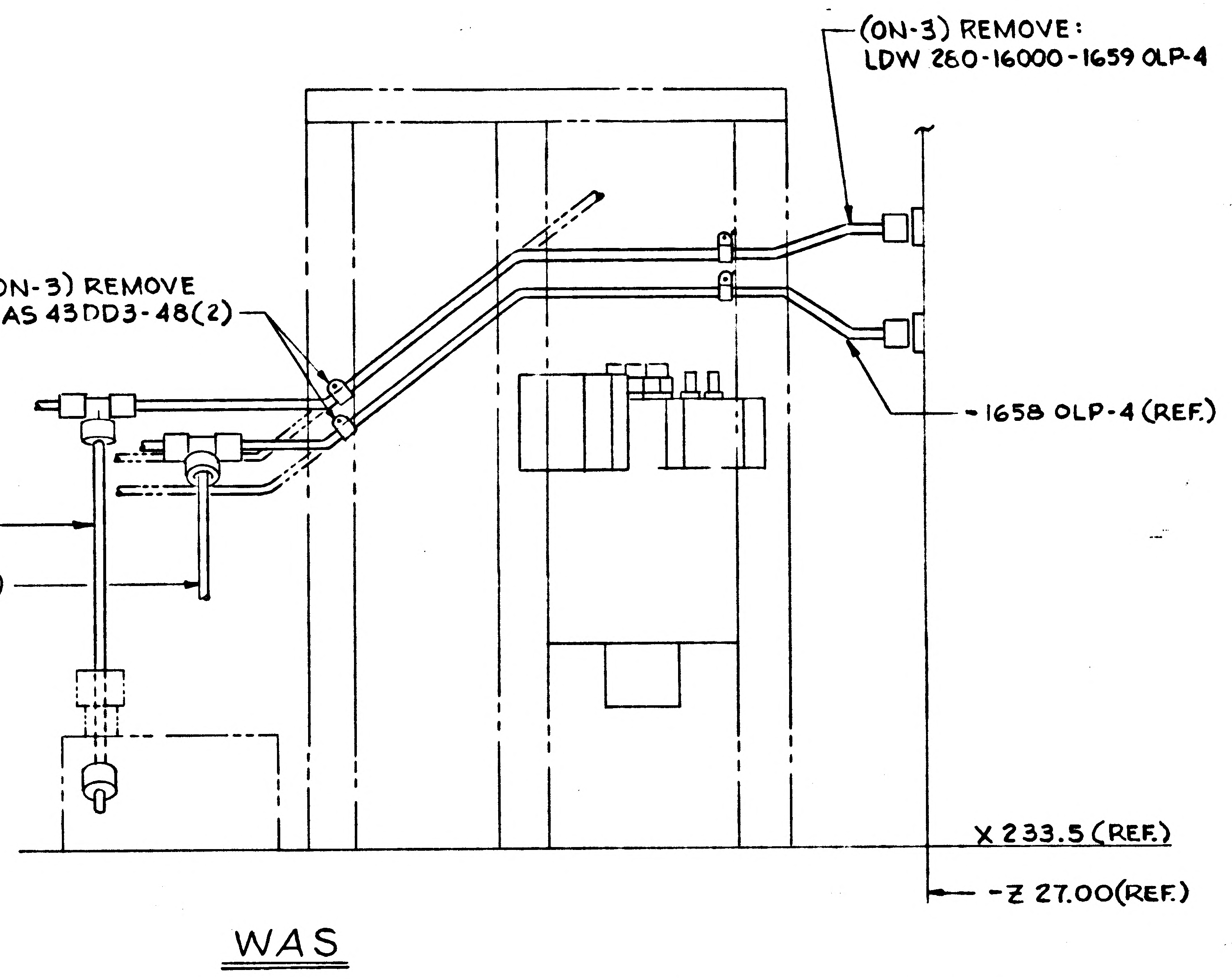
(ON-3) REMOVE:
LDW 280-16000-1659 OLP-4
(ON-3) REMOVE
NAS 43DD3-48(2)
-1658 OLP-4 (REF.)
(ON-3) REMOVE:
LDW 280-16000-1663 OLP-4
-1664 OLP-4 (REF.)
X 233.5 (REF.)
-Z 27.00(REF.)
WAS

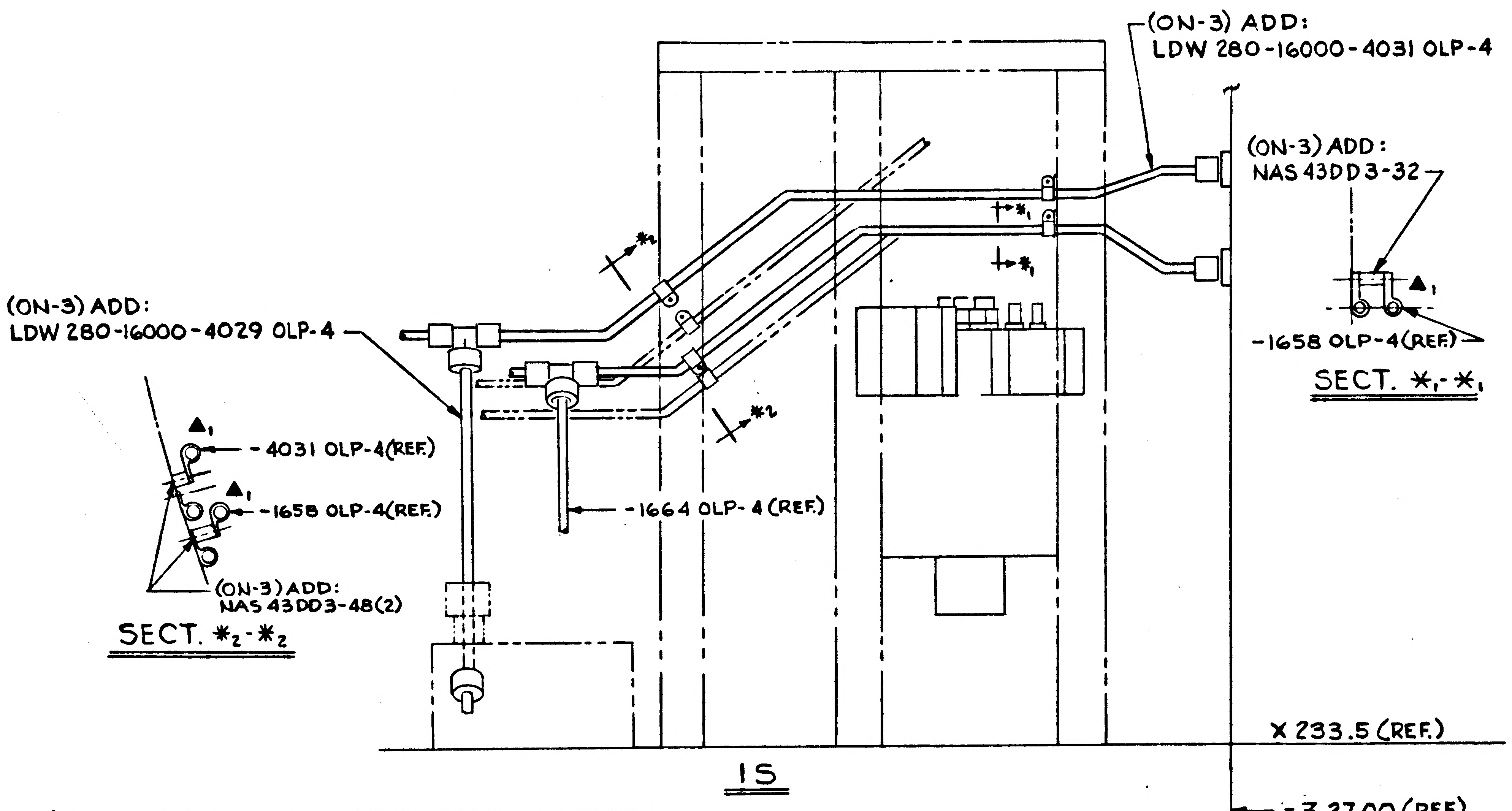
(ON-3) ADD:
LDW 280-16000-4031 OLP-4
(ON-3) ADD:
NAS 43DD3-32
▲1
-1658 OLP-4(REF.)
SECT. *1-*1
*1
*2
(ON-3) ADD:
LDW 280-16000-4029 OLP-4
▲1
-4031 OLP-4(REF.)
▲1
-1658 OLP-4(REF.)
(ON-3) ADD:
NAS 43DD3-48(2)
SECT. *2-*2
-1664 OLP-4 (REF.)
X 233.5 (REF.)
-Z 27.00 (REF.)
IS

$*_1$ & $*_2$: USE NEXT AVAILABLE SECTION LETTER.

$▲_1$: ADD GC500J CLAMPS PER LPC 280-21 (REF. NOTE 5).

DETAIL SPEC REQ		CL II ENGRG CHG	✓	CL I ENGRG CHG		(5)

REASON FOR EO	DESCRIPTION OF EO	GAEC EO RELEASE
TO AGREE WITH DETAIL CHANGE LDW 280-16000 EOV7. NEW LINE CONFIG. REQD FOR LM-2	(ON-3 INSTL) ADDED: NAS 43DD3-48(2), NAS 43DD3-32, -4031 OLP-4, -4029 OLP-4, SECT. *1 & *2. -1663 OLP-4, -1659 OLP-4 REMOVED. ADDED NAS 43DD3-48(2).	VC

MODEL	EFFECTIVITY			DRAWING CHANGE REQD		DISPOSITION OF PARTS									
	PROCURING ACTIVITY NO.	GAEC UNIT NO.	SUB CONTR UNIT NO.	REVISE DWG	RECORD EO	REWORK	SCRAP	APPROVED BY							
								DATE	2/27/68				1-17-68	1-17-68	1/22/68	1/16/68
LM		LM-2(32)		✓		✓			VDI	SUPPORT	RELIAB. GROUP	GROUP LEADER	STRESS GROUP	LIAISON ENGRG	PROJ ENGRG	GOVT

PRIORITY	DRAWING TITLE	DRAWING NO.	EO NO.
C	LINES INSTALLATION-ENVIRONMENTAL CONTROL SUBSYSTEM-TUNNEL	LDW 280-52353	C4

ISSUED BY CIPOLLA LIASON SECTION YDI GROUP NO. 280 PL 25

01
NAS 9-1100

LDW280-52354 A

MODEL OR END ITEM	NEXT ASSY	MODULE OR SER NO.	REQD PER MODULE OR END ITEM
PART NO.		GAEC SCH NO.	

MODEL OR END ITEM	NEXT ASSY	MODULE OR SER NO.	REQD PER MODULE OR END ITEM
PART NO.		GAEC SCH NO.	

LEM	LDW280-52001	LEM2(32)	1
MODEL OR END ITEM	NEXT ASSY	MODULE OR SER NO.	REQD PER MODULE OR END ITEM
PART NO. LDW280-52354-1		GAEC SCH NO. 30-	

TO BE REDRAWN ON PRODUCTION FORMAT (5)

SH REV STATUS: FOR DESCRIPTION OF REV SEE SUBQ SH

SHEET	1.00	2.00	2.01	3.00	1.10		4.00		
REV	A	A	A	A	A		A		
SHEET									
REV									
SHEET									
REV									

LAST SECT LTR USED D-D

LAST DASH NO. USED -1

GRUMMAN REL INFO A

PRIM NO. K/001

320 MP-TA-1/1/8

UNLESS OTHERWISE SPECIFIED DIMENSIONS ARE IN INCHES.

TOLERANCE UNLESS SPECIFIED

FRACTIONS - DECIMALS – ANGLES

~ ~ ~

ORIG DWG AUTH

DETAIL SPEC REQUIREMENT

CLASS II ENGRG CHANGE

CLASS I ENGRG CHANGE

CONTRACT NO. NAS9-1100

LINE ITEM 050

DOCUMENTATION TYPE II

DRAWN BY E. BIANCHI 9/66

LAYOUT BY D. Commisso

CHECKED BY

GR. LDR. JW/ [illegible] 9/10/66

VDI [illegible] 9/2

STRUC CW EB NW 9-16

STRUC. Hillerman 9-16

WEIGHTS Rabeck 9-29

PROJ ENGR R.M. Carbee 9-17

REL GROUP Bott. 10-4-66

GRUMMAN AIRCRAFT ENGRG CORP

BETHPAGE, L. I., NEW YORK

LINES INSTALLATION

ENVIRONMENTAL CONTROL SUB-SYSTEM MID-SECTION EXT.

SIZE B

CODE IDENT NO. 26512

LDW280-52354 A

SCALE NONE

SHEET 1.00 OF 6

ENG 77.1 12-65

C.D.R. 10 SEPT 1966

01

NAS 9-1100

REVISIONS

CHANGE LTR	ITEM NO.	SHEET NO.	ZONE	GRUMMAN INFO ONLY	DET SPEC	CLASS I	CLASS II	ENGRG ORDER	DESCRIPTION	EFFECTIVITY	DISPOSITION OF EXISTING PARTS		CHANGED BY AND DATE	ENGRG APPD	GOVT APPD
											REWORK	SCRAP			
									ADDED SH 1.10; LAST SECT LTR USED D-D WAS C-C, SH 1 OF 6 WAS SH 1 OF 5						
A	1.	2.00						EO-A1	REMOVE -817 ECW-4	LM2-32		✓	W.C. ROOS. DEC.19 -67		
	2	4.00 3.00 2.01	3A 3C 4B					EO-A2	ON-1 INSTL ADDED LDW 280P16221-15(3), DELETED GB511J-08-1, ADDED GB511J-08-2(3). SEE NOTE 8. ADDED SECT D-D ADDED NOTE 8 LDW 280P16221-13 (7 WAS 11)		✓				
	3	3.00		6				EO-A3	(REVISION OF EO-A2), NOTE 8 WAS "BONDED TO STRUCTURE PER LSP-14-22602."		NOT	REQ'D			
	4	3.00						LEO 280-314	ADD NOTE #9						
	5	4.00 2.01	8A	6				EO-A5	ON-1 INSTL: REMOVED LDW 280-16009-11; IN SECT B-B REMOVED: LDW280-16009-11 & ADDED LDW280-16009-27(REF)		✓				
	6	3.00		E		✓		LEO280-769 LCD 1961	DELETED: NOTE 3		NOT	REQ'D			
	7	4.00 2.01	8A	H				EO-A7 LCD 2223	ON-1 INSTL: DELETED LDW 280-16009-27(REF), ADDED LSC269-161-4 & LSC 269-117-4.		✓				

FOR CONTINUATION OF REVISIONS SEE SHEET ______

GRUMMAN AIRCRAFT ENGRG CORP, BETHPAGE, L. I., NEW YORK

SIZE	CODE IDENT NO.		
B	26512	LDW 280-52354	A
SCALE NONE		SHEET 1.10	

ENG 77.3 5-66

01

NAS 9-1100

QTY PER ASSEMBLY							CODE IDENT	PART NO.	I&T	NOMENCLATURE OR DESCRIPTION	MATERIAL	GOVT SPEC	COML SPEC	STOCK SIZE	PROCESS SYM	FINISH NO.	ZONE
C1.						-1											
								LDW280-16000	E	TUBE ASSY	SEE DWG						
N						1		-806ECC-4									
						1		-801 ECC-4									
						1		-1109 ECW-4									
						1		-1101 N-4									
						1		-1082ECW-4									
						1		-1035 ECC-6									
						1		-1007ECW-4									
						1		-816ECW-4									
						1		-815ECC-6									
						1		-814ECC-6									
						1		-813ECC-6									
						1		-812ECC-6									
						1		-811ECC-6									
						1		-810 ECW-4									
						1		-1318N-4									
						1		-805ECC-6									
						1		-804ECC-4									
						1		-802ECC-4									
						1		-800ECC-4									
						1		-798N-4									
N						1		-749 N-4									
								LDW280-16000		TUBE ASSY							
								LDW280-52354-1	E	LINES INSTL.	SEE DWG						

C1 CLEANLINESS LEVEL

SYM OR NO.	PROCESS OR FINISH	GRUMMAN SPEC OR MILITARY SPEC	SYM OR NO.	PROCESS OR FINISH	GRUMMAN SPEC OR MILITARY SPEC	SYM OR NO.	PROCESS OR FINISH	GRUMMAN SPEC OR MILITARY SPEC

I & T: IDENTIFICATION AND TRACEABILITY IN ACCORDANCE WITH : NONE

GRUMMAN AIRCRAFT ENGRG CORP, BETHPAGE, L. I., NEW YORK

SIZE	CODE IDENT NO.		
B	26512	LDW280-52354	A
SCALE NONE		SHEET 2.00	

(9)

ENG 77.2 7-65

01

NAS 9-1100

							CODE IDENT	PART NO.	I&T	NOMENCLATURE OR DESCRIPTION	MATERIAL	GOVT SPEC	COML SPEC	STOCK SIZE	PROCESS SYM	FINISH NO.	ZONE
N						1		LSC269-117-4	E	NUT	SEE NOTE 1						
N						1		LSC269-161-4	E	PLUG	SEE NOTE 1						
A						10		GC500-D6T	E	CLAMP	GRUMMAN STD						
A						25		GC500-D4T	E	CLAMP	GRUMMAN STD						
A						40		MS21042L08	E	NUT	STD PART						
A						80		AN960D8L		WASHER	STD. PART						
A						7		GB511J-08-6		BOLT	GAEC STD						
A						8		GB511J-08-2		BOLT	GAEC STD						
A																	
N						1		LDW330M10022-19		ORIFICE	SEE DWG						
A						7		LDW280P16221-13		SPACER	SEE DWG						
A						3		LDW280P16221-15		SPACER	SEE DWG						
N						4		LSC269-119-4		NUT	SEE NOTE #1						
						1		LSC269-159-1		TEE							
						4		LSC269-124-4		UNION							
						5		LSC269-118-6		SEAL							
N						20		LSC269-118-4	E	SEAL	SEE NOTE #1						
						-1											
QTY PER ASSEMBLY																	

SYM OR NO.	PROCESS OR FINISH	GRUMMAN SPEC OR MILITARY SPEC	SYM OR NO.	PROCESS OR FINISH	GRUMMAN SPEC OR MILITARY SPEC	SYM OR NO.	PROCESS OR FINISH	GRUMMAN SPEC OR MILITARY SPEC

I&T: IDENTIFICATION AND TRACEABILITY IN ACCORDANCE WITH : NONE

GRUMMAN AIRCRAFT ENGRG CORP, BETHPAGE, L. I., NEW YORK

SIZE	CODE IDENT NO.		
B	26512	LDW280-52354	A
SCALE NONE		SHEET 2, 01	

ENG 77.2 7-65

01

NAS 9-1100

NOTES:

1 COMMERCIAL PART: SEE SPECIFICATION CONTROL DRAWING BEFORE ORDERING

2 TUBE NUMBERS ARE DASH NUMBERS OF LDW 280-16000

~~3 BONDING TO BE IN ACCORDANCE WITH LSP 390-001~~

4 TUBE ASSEMBLIES AND FITTINGS SHALL BE CLEANED TO LEVEL "N" OF LSP-14-0011
PRIOR TO INSTL & LEVEL "E" SHALL BE MAINTAINED ON FINAL INSTL

5 SUBSTITUTION OF NAS 1132 V OR AN 525-8 FOR THE GB511J BOLT IS PERMISSIBLE.

6 SUBSTITUTION OF AN 742 D4 & AN 742D6 FOR THE GC500-D4T & GC500-DT6 CLAMPS IS PERMISSIBLE.

7. TUBE CONNECTIONS SHALL BE MADE PER LSP-14-17402

8 ALL LDW 280P16221-13 & -15 SPACERS TO BE BONDED TO STRUCTURE WITH EPON 934 PER LSP-14-22602.

9 SUBSTITUTION OF NAS 1132 V*, AN525-832 R* OR AN525-832-* BOLT FOR THE GB511J-08-* BOLT IS PERMISSIBLE.

GRUMMAN AIRCRAFT ENGRG CORP., BETHPAGE, L. I., NEW YORK			
SIZE B	CODE IDENT NO. 26512	LDW280-52354	A
SCALE NONE		SHEET 3.00	(A)

ENG 72.1 6-64

01 NAS 9-1100

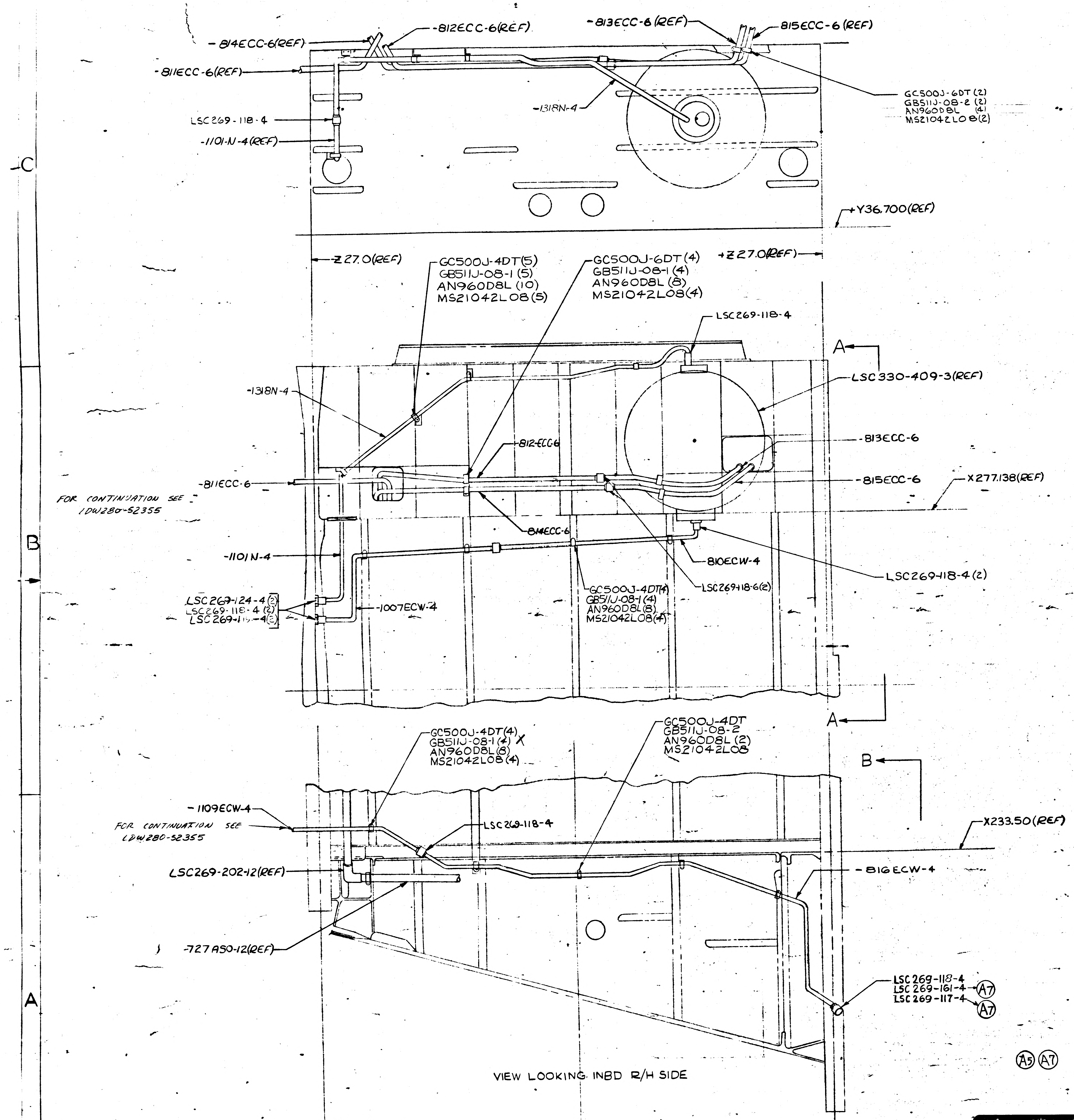
-814ECC-6(REF)
-812ECC-6(REF)
-813ECC-6(REF)
-815ECC-6(REF)
-811ECC-6(REF)
-1318N-4
LSC269-118-4
-1101-N-4(REF)
GC500J-6DT(2)
GB511J-08-2(2)
AN960D8L (4)
MS21042L08(2)
Y36.700(REF)
Z27.0(REF)
Z27.0(REF)
GC500J-4DT(5)
GB511J-08-1(5)
AN960D8L(10)
MS21042L08(5)
GC500J-6DT(4)
GB511J-08-1(4)
AN960D8L(8)
MS21042L08(4)
LSC269-118-4
A
LSC330-409-3(REF)
-1318N-4
-812ECC-6
-813ECC-6
-811ECC-6
-815ECC-6
X277.138(REF)
FOR CONTINUATION SEE LDW280-52355
-814ECC-6
-1101N-4
-810ECW-4
LSC269-118-6(2)
LSC269-118-4(2)
LSC269-124-4(2)
LSC269-118-4(2)
LSC269-1--4(2)
-1007ECW-4
GC500J-4DT(4)
GB511J-08-1(4)
AN960D8L(8)
MS21042L08(4)
A
GC500J-4DT(4)
GB511J-08-1(4) X
AN960D8L(8)
MS21042L08(4)
GC500J-4DT
GB511J-08-2
AN960D8L(2)
MS21042L08
B
-1109ECW-4
FOR CONTINUATION SEE LDW280-52355
LSC269-118-4
X233.50(REF)
LSC269-202-12(REF)
-816ECW-4
-727A50-12(REF)
LSC269-118-4
LSC269-161-4 A7
LSC269-117-4 A7
A5 A7
B

VIEW LOOKING INBD R/H SIDE

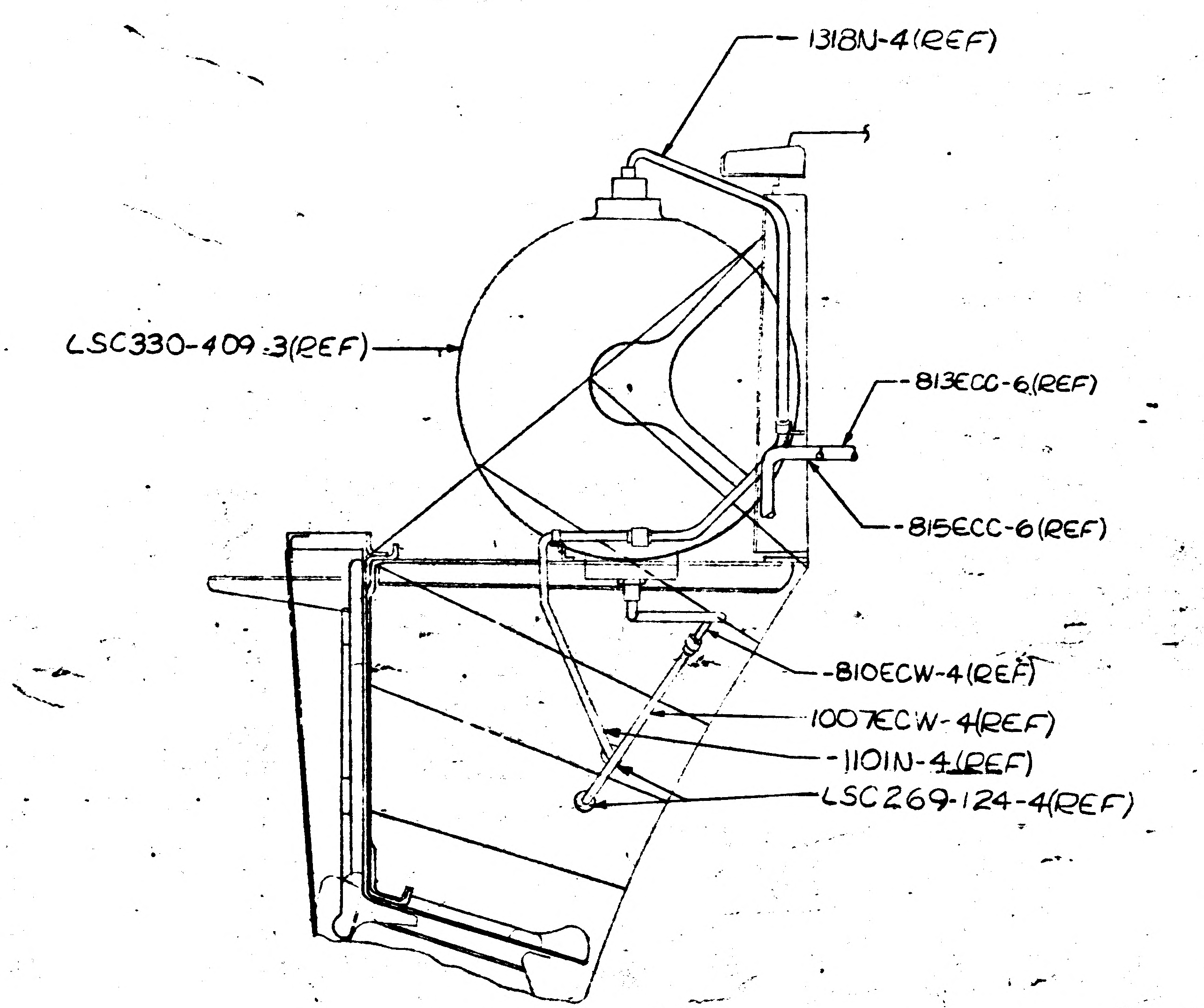
-1318N-4(REF)
LSC330-409-3(REF)
-813ECC-6(REF)
-815ECC-6(REF)
-810ECW-4(REF)
1007ECW-4(REF)
-1101N-4(REF)
LSC269-124-4(REF)

PARTIAL VIEW A-A

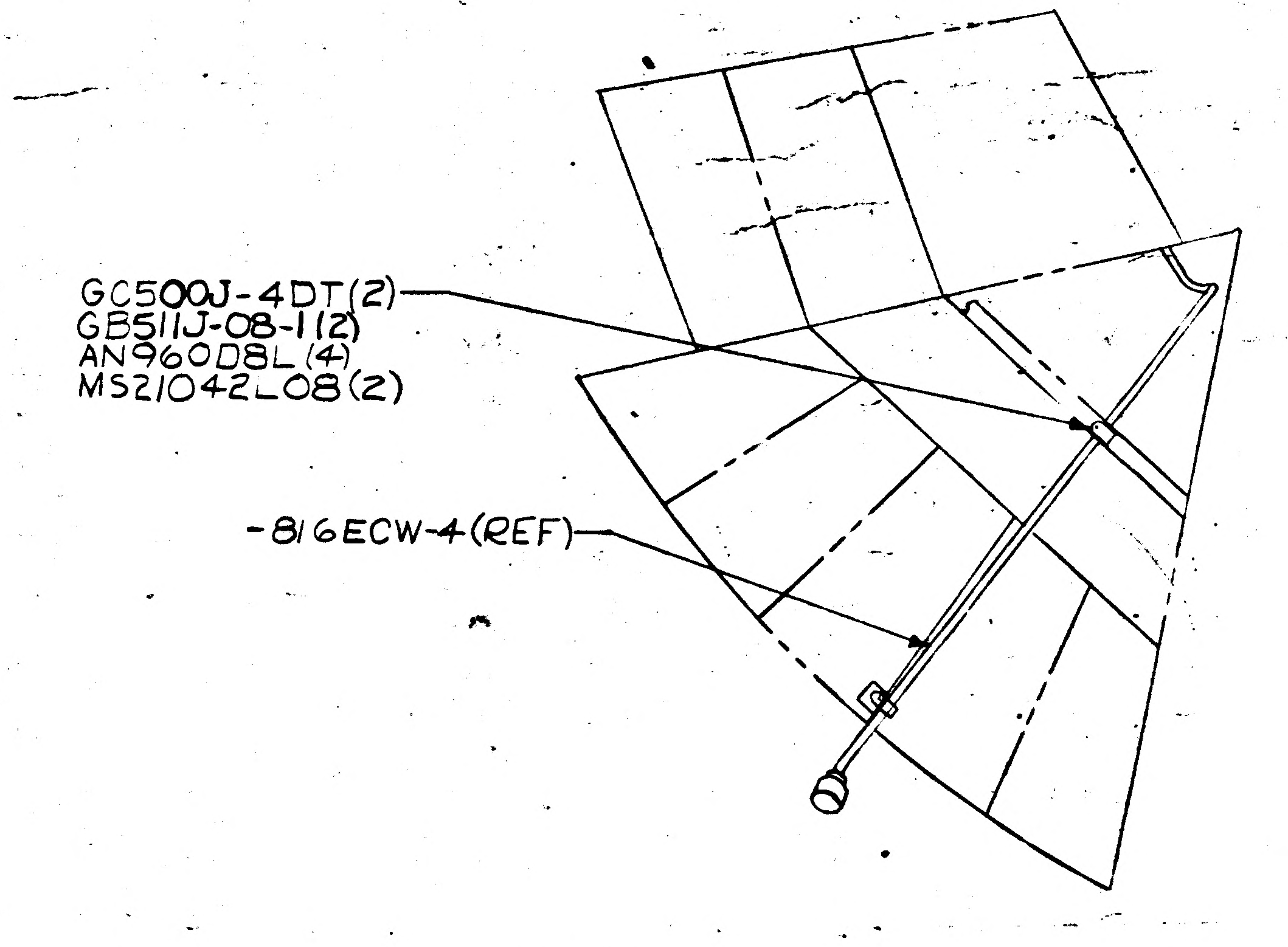
GC500J-4DT(2)
GB511J-08-1(2)
AN960D8L(4)
MS21042L08(2)
-816ECW-4(REF)
A5 A7

PARTIAL VIEW B-B

-1082ECW-4(REF)
-798N4(REF)
LSC269-124

01/03 NAS 9-1100

CODE IDENT NO 26512
LDW280-52354 SHEET 4

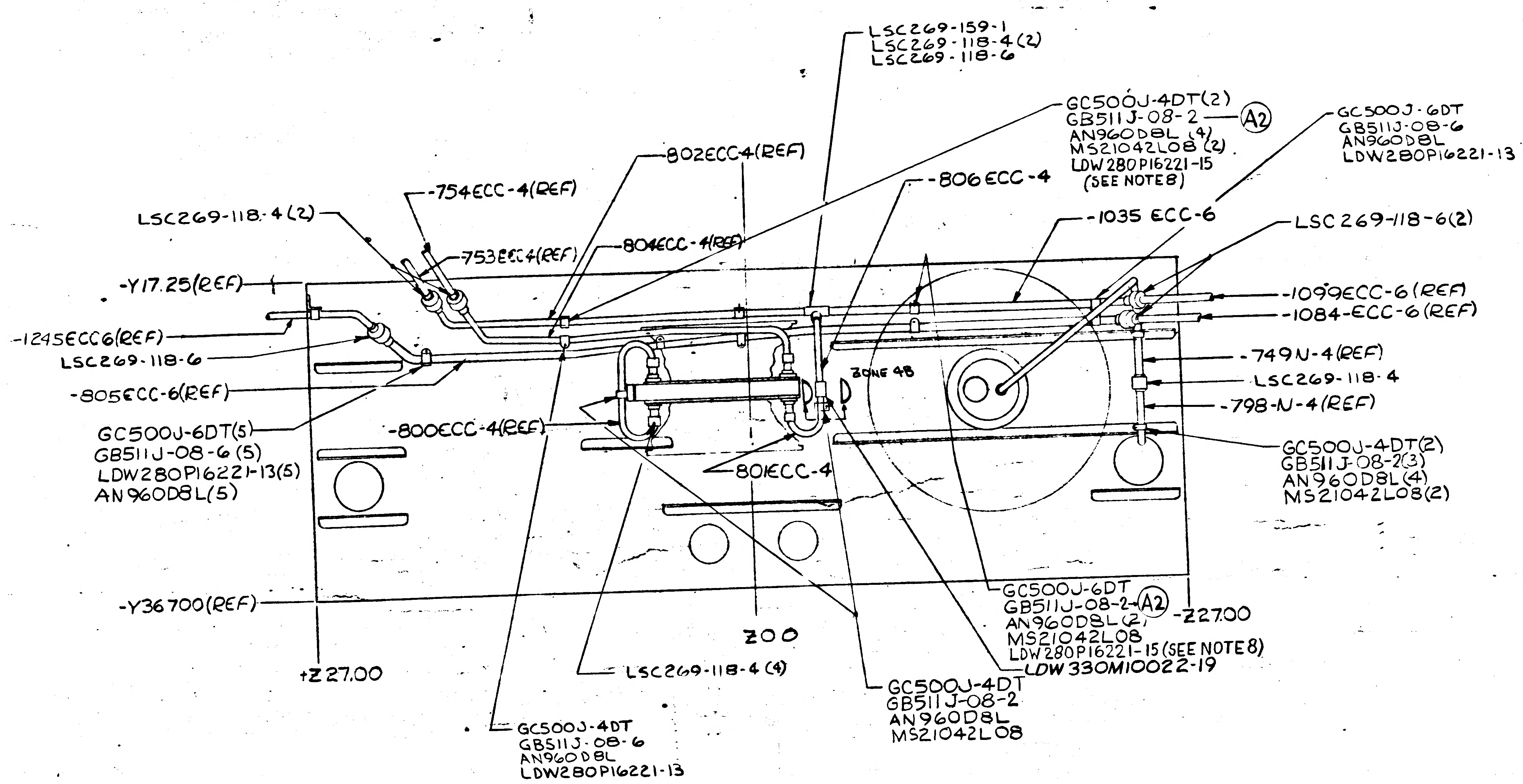
LSC269-159-1
LSC269-118-4(2)
LSC269-118-6
GC500J-4DT(2)
GB511J-08-2 (A2)
AN960D8L(4)
MS21042L08(2)
LDW280P16221-15
(SEE NOTE 8)
GC500J-6DT
GB511J-08-6
AN960D8L
LDW280P16221-13
-802ECC4(REF)
-806ECC-4
-754ECC-4(REF)
LSC269-118-4(2)
-753ECC4(REF)
-804ECC-4(REF)
-1035 ECC-6
LSC 269-118-6(2)
-Y17.25(REF)
-1099ECC-6(REF)
-1084-ECC-6(REF)
-1245ECC6(REF)
LSC269-118-6
-805ECC-6(REF)
-749N-4(REF)
LSC269-118-4
-798-N-4(REF)
ZONE 4B
GC500J-6DT(5)
GB511J-08-6(5)
LDW280P16221-13(5)
AN960D8L(5)
-800ECC-4(REF)
801ECC-4
GC500J-4DT(2)
GB511J-08-2(3)
AN960D8L(4)
MS21042L08(2)
-Y36700(REF)
Z00
GC500J-6DT
GB511J-08-2 (A2)
AN960D8L(2)
MS21042L08
LDW280P16221-15 (SEE NOTE 8)
LDW330M10022-19
-Z27.00
+Z27.00
LSC269-118-4(4)
GC500J-4DT
GB511J-08-2
AN960D8L
MS21042L08
GC500J-4DT
GB511J-08-6
AN960D8L
LDW280P16221-13

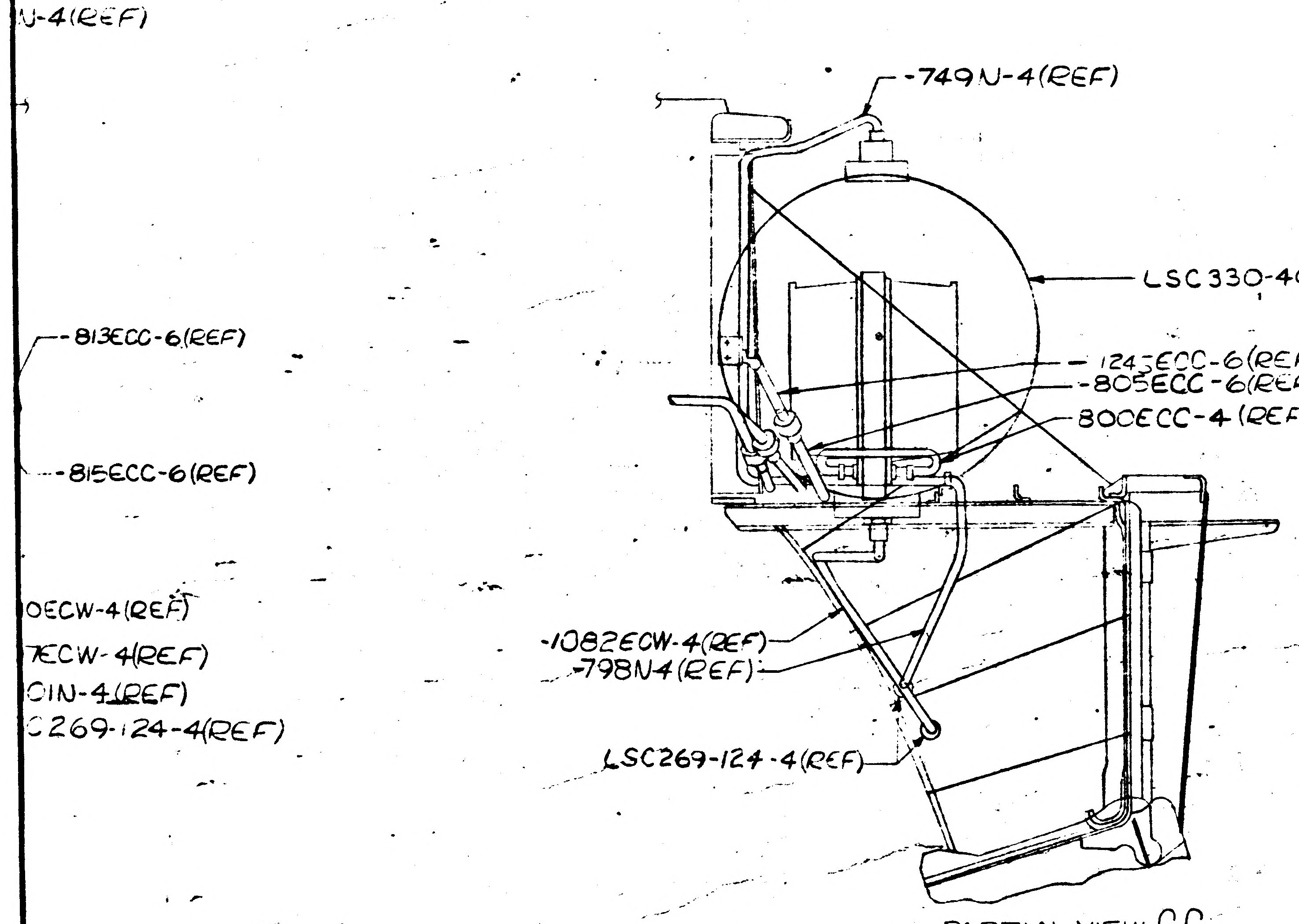
N-4(REF)
-749N-4(REF)
LSC330-4093(REF)
-813ECC-6(REF)
-1245ECC-6(REF)
-805ECC-6(REF)
800ECC-4(REF)
-815ECC-6(REF)
0ECW-4(REF)
ECW-4(REF)
-1082ECW-4(REF)
-798N4(REF)
CIN-4(REF)
C269-124-4(REF)
LSC269-124-4(REF)

PARTIAL VIEW C-C

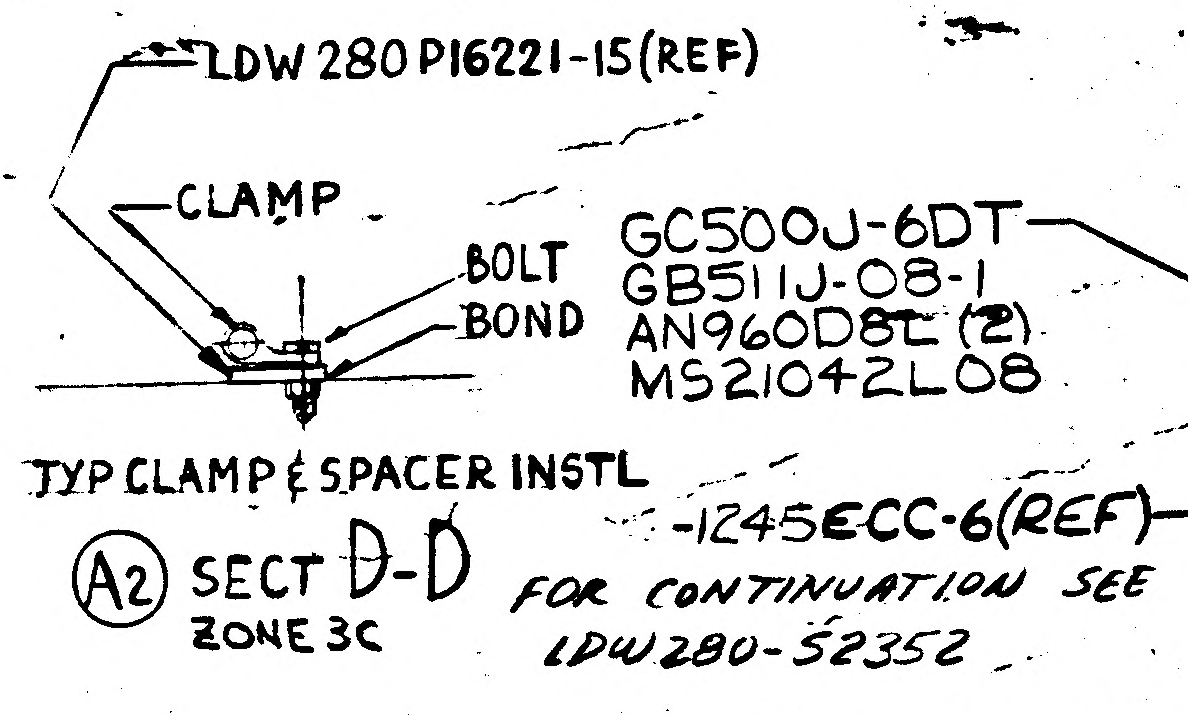
LDW280P16221-15(REF)
CLAMP
BOLT
BOND
GC500J-6DT
GB511J-08-1
AN960D8L(2)
MS21042L08
TYP CLAMP & SPACER INSTL
(A2) SECT D-D
ZONE 3C
-1245ECC-6(REF)
FOR CONTINUATION SEE
LDW280-52352

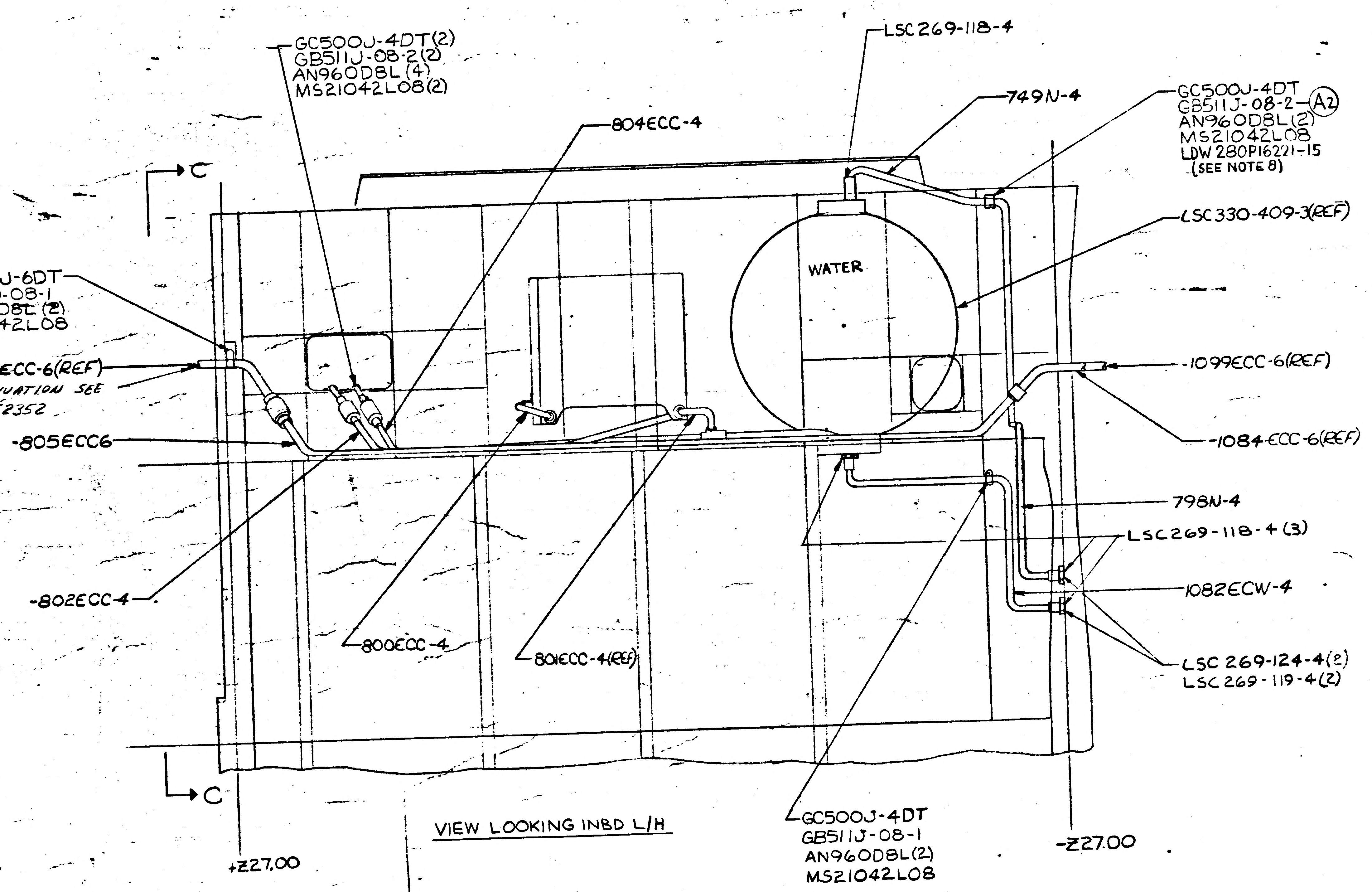
GC500J-4DT(2)
GB511J-08-2(2)
AN960D8L(4)
MS21042L08(2)
LSC269-118-4
804ECC-4
749N-4
GC500J-4DT
GB511J-08-2 (A2)
AN960D8L(2)
MS21042L08
LDW280P16221-15
(SEE NOTE 8)
LSC330-409-3(REF)
C
WATER
-1099ECC-6(REF)
-1084-ECC-6(REF)
-805ECC6
798N-4
LSC269-118-4(3)
1082ECW-4
-802ECC-4
800ECC-4
801ECC-4(REF)
LSC 269-124-4(2)
LSC 269-119-4(2)
C
+Z27.00
-Z27.00
GC500J-4DT
GB511J-08-1
AN960D8L(2)
MS21042L08

VIEW LOOKING INBD L/H

FOR CONTINUATION SEE LDW290-52355

02/031 NAS 9-1100

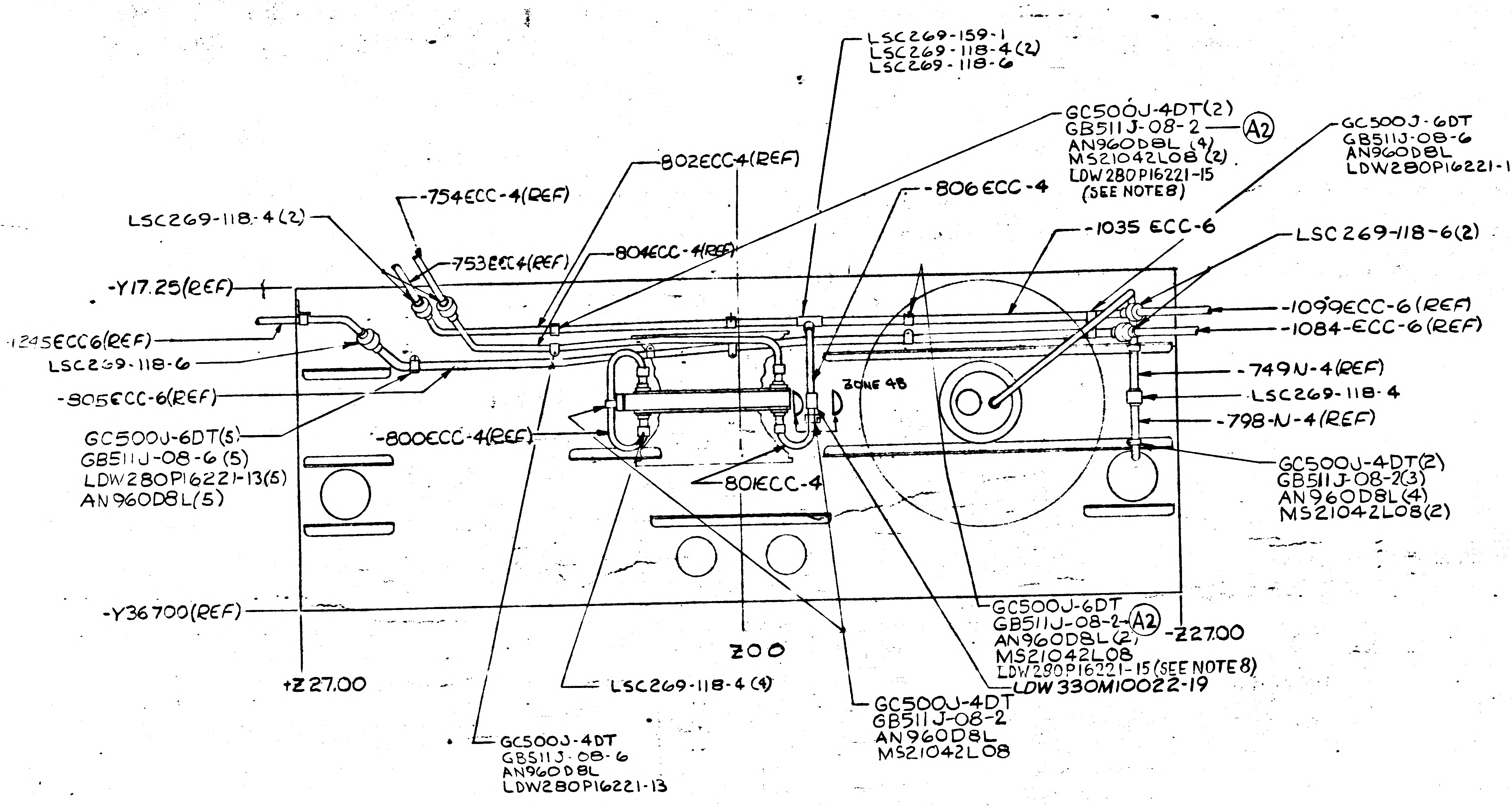
LSC269-159-1
LSC269-118-4(2)
LSC269-118-6
GC500J-4DT(2)
GB511J-08-2 (A2)
AN960D8L (4)
MS21042L08 (2)
LDW280P16221-15
(SEE NOTE 8)
GC500J-6DT
GB511J-08-6
AN960D8L
LDW280P16221-13
802ECC4(REF)
-754ECC-4(REF)
-806ECC-4
LSC269-118-4(2)
-753ECC4(REF)
-804ECC-4(REF)
-1035 ECC-6
LSC 269-118-6(2)
-Y17.25(REF)
-1245ECC6(REF)
LSC269-118-6
-805ECC-6(REF)
GC500J-6DT(5)
GB511J-08-6 (5)
LDW280P16221-13(5)
AN960D8L(5)
-800ECC-4(REF)
801ECC-4
ZONE 4B
-1099ECC-6(REF)
-1084-ECC-6(REF)
-749N-4(REF)
LSC269-118-4
-798-N-4(REF)
GC500J-4DT(2)
GB511J-08-2(3)
AN960D8L(4)
MS21042L08(2)
-Y36700(REF)
+Z27.00
Z00
LSC269-118-4 (4)
GC500J-6DT
GB511J-08-2 (A2)
AN960D8L(2)
MS21042L08
LDW280P16221-15 (SEE NOTE 8)
LDW330M10022-19
-Z27.00
GC500J-4DT
GB511J-08-2
AN960D8L
MS21042L08
GC500J-4DT
GB511J-08-6
AN960D8L
LDW280P16221-13

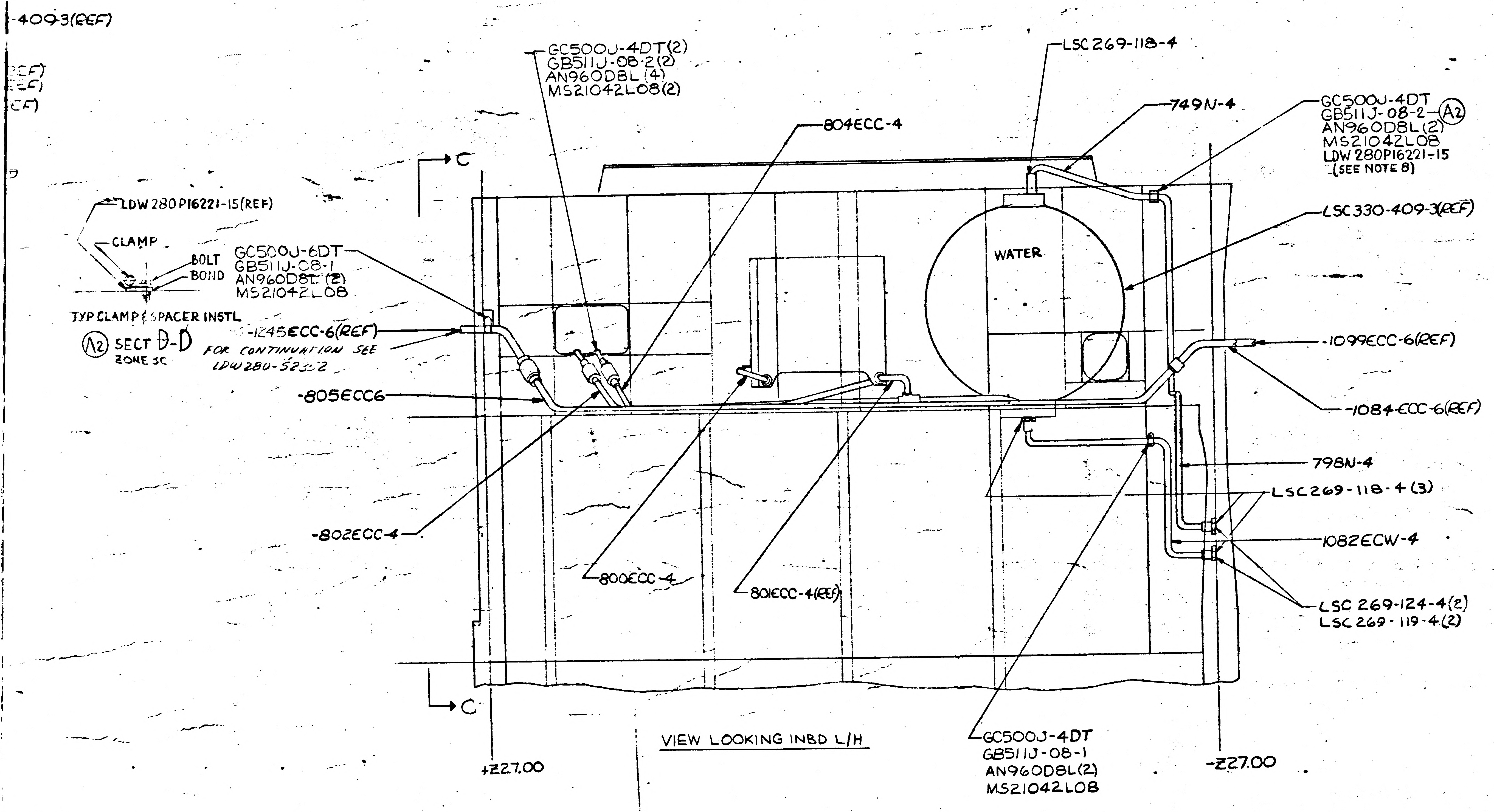
-4093(REF)
GC500J-4DT(2)
GB511J-08-2(2)
AN960D8L (4)
MS21042L08(2)
804ECC-4
LSC269-118-4
749N-4
GC500J-4DT
GB511J-08-2 (A2)
AN960D8L(2)
MS21042L08
LDW280P16221-15
(SEE NOTE 8)
LSC330-409-3(REF)
C
LDW280P16221-15(REF)
CLAMP
BOLT
BOND
GC500J-6DT
GB511J-08-1
AN960D8L (2)
MS21042L08
TYP CLAMP & SPACER INSTL
(A2) SECT D-D
ZONE 3C
-1245ECC-6(REF)
FOR CONTINUATION SEE LDW280-52352
WATER
-1099ECC-6(REF)
-805ECC6
-1084-ECC-6(REF)
798N-4
LSC269-118-4 (3)
-802ECC-4
1082ECW-4
800ECC-4
801ECC-4(REF)
LSC 269-124-4(2)
LSC 269-119-4(2)
C
VIEW LOOKING INBD L/H
+Z27.00
GC500J-4DT
GB511J-08-1
AN960D8L(2)
MS21042L08
-Z27.00

FOR CONTINUATION SEE LDW280-52355

MANUFACTURING OPERATIONS UNLESS OTHERWISE SPECIFIED NOTES CHECKED √ APPLY TO THIS DWG.	
PART NUMBER AND ALL OTHER MARKINGS IN REGION MARKED ▨ USE BOTH SIDES IF NECESSARY.	
FILLET AND INSIDE CORNER RADII TOLERANCES .016R TO .062R ± .010 .063R TO .250R ± .015 OVER .250R ± .030	
DEPTH SHOWN FOR TAPPED HOLES IS FULL THDS. 2-3 IMP THDS. BEYOND PERMISSIBLE.	
EXTERNAL THREAD LENGTH SHOWN INCLUDES 2 IMPERFECT THREADS MAX.	
DO NOT CADMIUM PLATE & PAINT HOLES OR SURFACES MARKED WITH DOUBLE ASTERISK.	
MISMATCH STEP OF ± .005 PERMISSIBLE DUE TO CHANGE OF CUTTERS AT INSIDE INTERSECTING SURFACES.	
DIAMETERS MARKED MUST BE CONCENTRIC WITHIN FULL INDICATOR READING	
HOLES MUST BE KEPT FREE OF CHROME PLATING SOLUTION.	
ALL DIMENSIONS SHOWN TO BE MET AFTER CADMIUM PLATING. THICKNESS OF PLATE .0003 MIN. TO .0005 MAX. MIN. THICKNESS TO BE .0002 ON THREADED AREAS. NO ALLOWANCE FOR PLATING IN HOLES	
125 √ SURFACE ROUGHNESS INCLUDING REAMED HOLES PER MIL-STD-10	
200 √ FOR ALL DRILLED HOLES	
REMOVE ALL BURRS. BREAK ALL EDGES .015-.031	
INSPECTION INFORMATION MINIMUM PERMISSIBLE AVERAGE EDGE DISTANCE MARKED IS	
SYMBOL √ DENOTES SURFACE TO BE MACHINED	
UNLESS OTHERWISE SPECIFIED TOLERANCE ON FLANGES IS ± 1/32	
LENGTHS OF AN, NAS & MS AL ALY RIVETS SHORTER THAN 1 INCH ARE NOT SPECIFIED.	
TOLERANCE ON LOFTED DELINEATIONS IS	

DWG SIZE 34 X 90

PRINTING INFO ONLY
FULL SIZE SHEET AREA (36 X 102) = 25.5 SQ. FT.
1/2 SIZE SHEET AREA (1/4 OF FULL) = 6.7 SQ. FT.

PRINT TRIM LINE

LDW280-52354A

LDW280-52354 A

03703

NAS 9-1100

CODE IDENT NO. 26512	SHEET
LDW280-52354	4

GRUMMAN AIRCRAFT ENGRG CORP., BETHPAGE, L. I., NEW YORK

	SIZE	CODE IDENT NO.		
LEM-2	J	26512	LDW280-52354	A
MODEL OR END ITEM	SCALE 1/4		SHEET 4	

(A)

3FR

THIS IS AN ORIGINAL DWG

ENG 32.1 REV 3-65 *

GRUMMAN AIRCRAFT ENGINEERING CORP.
CODE IDENT NO. 26512
ENGINEERING ORDER

DWG. NO. LDW280-52354
EO NO. A1
CONTROL INFO NO. LDW280-A0738

REMOVE -817ECW-4 FROM BILL OF MATERIALS

DETAIL SPEC REQ		CL II ENGRG CHG		CL I ENGRG CHG		3

REASON FOR EO: INCORRECT NUMBER ASSIGNED TO FLEX HOSE

DESCRIPTION OF EO: NOTED

GAEC EO RELEASE: FR 9/28/66

MODEL	EFFECTIVITY		
	PROCURING ACTIVITY NO.	GAEC UNIT NO.	SUB CONTR UNIT NO.
LM		LM-2(32)	

DRAWING CHANGE REQD		DISPOSITION OF PARTS	
✓			✓
REVISE DWG	RECORD EO	REWORK	SCRAP

APPROVED BY	JW				BW		RMC (EW)
DATE ✓	9/27/66	10-3			9-22-66		9-28
	VDI	~~SUPPORT~~ WP	RELIAB. GROUP	GROUP LEADER	STRESS GROUP	LIAISON ENGRG	PROJ ENGRG

9/27/66

PRIORITY	DRAWING TITLE	DRAWING NO.	EO NO.
C	ENVIRONMENTAL CONTROL SUB-SYS A/S MID-SECT EXT	LDW280-52354	A1

ISSUED BY E. BIANCHI X 6566 SECTION EQUIP LINES VDI GROUP NO. 332 PL 35

01

NAS 9-1100

01

ENG 32.2 REV 3-65

*

GRUMMAN AIRCRAFT ENGINEERING CORP.

CODE IDENT NO. 26512

ENGINEERING ORDER

DWG. NO. LDW280-52354

EO NO. A2

CONTROL INFO NO. LDW280A-0846

ON SHEET 2.01 OF BILL OF MATERIALS REVISE QUANTITY OF LDW280P16221-13 TO 7 WAS 11

ON SHEET 3.00 ADDED NOTE ✱✱ ALL LDW280P16221-13 & -15 SPACERS TO BE BONDED TO STRUCTURE PER LSP-14-22602

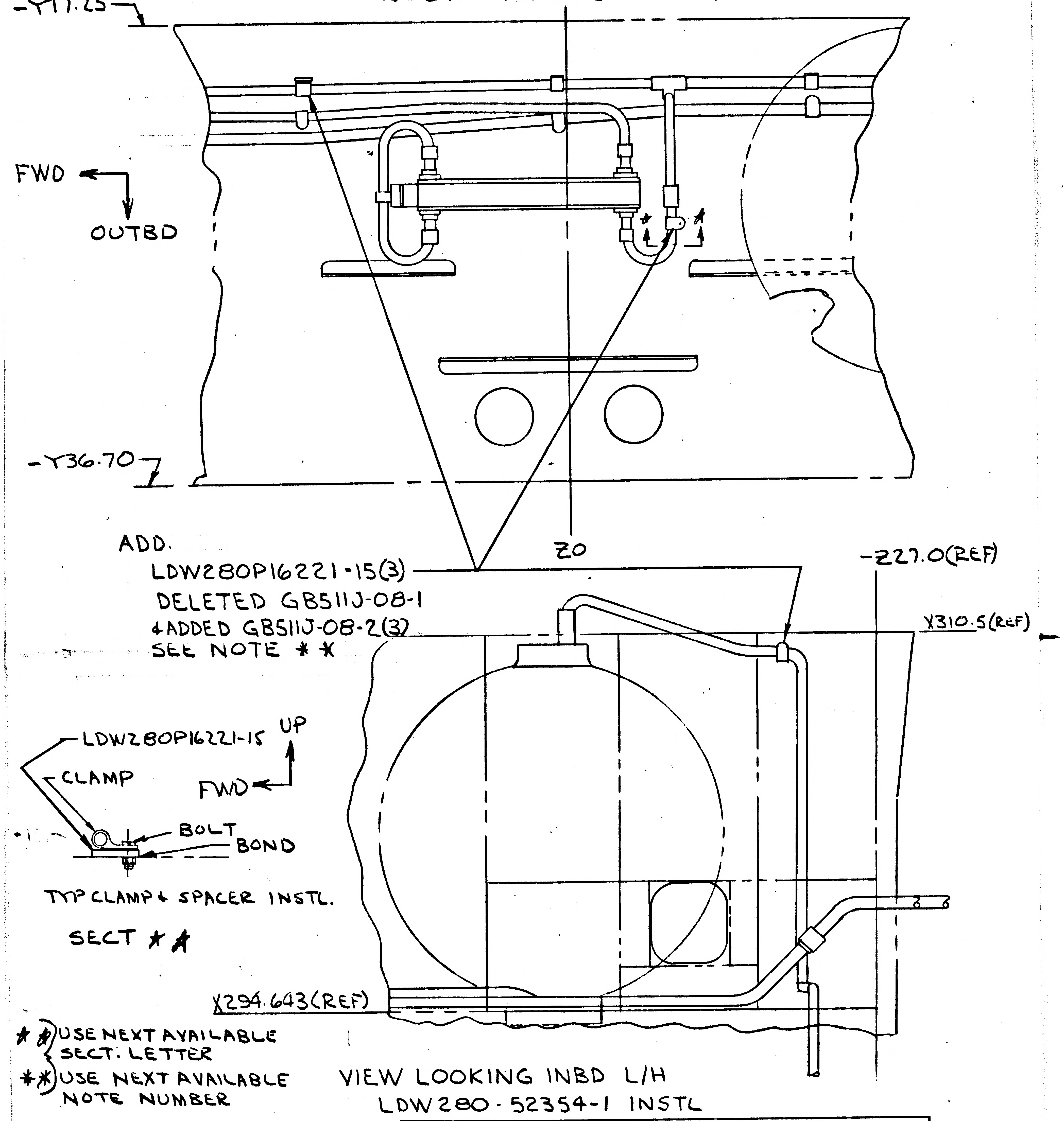

-Y17.25
FWD
OUTBD
-Y36.70
Z0
ADD.
LDW280P16221-15(3)
DELETED GB511J-08-1
& ADDED GB511J-08-2(3)
SEE NOTE ✱✱
-Z27.0(REF)
Y310.5(REF)
LDW280P16221-15
CLAMP
UP
FWD
BOLT
BOND
TYP CLAMP & SPACER INSTL.
SECT ★★
X294.643(REF)

★★) USE NEXT AVAILABLE SECT. LETTER

✱✱) USE NEXT AVAILABLE NOTE NUMBER

VIEW LOOKING INBD L/H
LDW280-52354-1 INSTL

CONT. OF DESCRIPTION OF EO
ADDED NOTE ✱✱ TO SHEET 3.00
ADDED SECT ★★

(5)

DETAIL SPEC REQ		CL II ENGRG CHG		CL I ENGRG CHG	

REASON FOR EO: TO PROVIDE CLEARANCE BETWEEN PLUMBING & STRUCTURE

DESCRIPTION OF EO: ON-1
ON SHEET 4 ADDED LDW280P16221-15(3)
DELETED GB511J-08-1 & ADDED GB511J-08-2(3)
REVISED QUANTITY OF LDW280P16221-13 TO 7 WAS 11

GAEC EO RELEASE: LE 10/17

MODEL	PROCURING ACTIVITY NO.	GAEC UNIT NO.	SUB CONTR UNIT NO.
LM		LM-2(32)	

DRAWING CHANGE REQD: REVISE DWG	RECORD EO	DISPOSITION OF PARTS: REWORK	SCRAP
✓		✓	

	VDI	SUPPORT	RELIAB. GROUP	GROUP LEADER	STRESS GROUP	LIAISON ENGRG	PROJ ENGRG	
APPROVED BY	JW	–	–	–	BW		PMC (WP)	
DATE	10-11-66				10-14		10-15-66	10-15-66

PRIORITY	DRAWING TITLE	DRAWING NO.	EO NO.
C	ENVIRONMENTAL CONTROL SUB-SYS MID-SECTION EXT.	LDW280-52354	A2

ISSUED BY ED BIANCHI SECTION EQUIPLINES GROUP NO. 332 PL 35

NAS 9-1100

ENG 32.1 REV 3-66

GRUMMAN AIRCRAFT ENGINEERING CORP.
CODE IDENT NO. 26512
ENGINEERING ORDER

DWG. NO. LDW280-52354
EO NO. A3
CONTROL INFO NO. LM-5-9708

THIS IS A REVISION OF EO A2

IN FLD/EO A2

NOTE ** ALL LDW280P16221-13 & -15 SPACERS TO BE BONDED TO STRUCTURE PER LSP-14-22602

S/B

NOTE ** ALL LDW280P16221-13 & -15 SPACERS TO BE BONDED TO STRUCTURE WITH EPON 934 PER LSP-14-22500

DETAIL SPEC REQ		CL II ENGRG CHG		CL I ENGRG CHG	

REASON FOR EO: TO MAKE THIS ASS'Y COMPATABLE WITH THE BONDING PROCESS USED ON LM VEHICLES.

DESCRIPTION OF EO: REF EO A2
IN FLD/EO ADDED TO NOTE ** "WITH EPON 934"

GAEC EO RELEASE: LG

MODEL	PROCURING ACTIVITY NO.	GAEC UNIT NO.	SUB CONTR UNIT NO.
LM		LM-2 (32)	

DRAWING CHANGE REQD		DISPOSITION OF PARTS	
REVISE DWG	RECORD EO	REWORK	SCRAP
✓		NOT	REQD

APPROVED BY	JW	—	—	—	NM	CH	RMC	
DATE	11/28				11-14-66	11-14-66	11-16-66	11-14-66
6	VDI	SUPPORT	RELIAB. GROUP	GROUP LEADER	STRESS GROUP	LIAISON ENGRG	PROJ ENGRG	~~GOVT~~

PRIORITY: C
DRAWING TITLE: LINES INSTALLATION, ENVIRONMENTAL CONTROL S/B SYSTEM MID-SECTION EXT.
DRAWING NO.: LDW280-52354
EO NO.: A3

ISSUED BY LIAISON, P. HUSTED, 6452 SECTION EQUIP. LINES GROUP NO. 332 PL 35

*

GRUMMAN AIRCRAFT ENGINEERING CORP.
CODE IDENT NO. 26512
ENGINEERING ORDER

ENG 32.1 REV 3-65

DWG. NO. LEO280- | EO NO. 314
CONTROL INFO NO. LDW280-A20[illegible]7

ON SH 3 OF THE FOLLOWING DWGS

DWG No.–	CHG NO	DWG No.	CHG NO	DWG NO	CHG NO
✓ LDW280-52350	A2	✓ LDW280-52354	A4	LDW280-52358	A1
✓ 52351	A2	-52355	A2	-52359	A3
✓ 52352	A1	-52356	A1	LDW 280-52360	A2
✓ LDW 280-52353	A1	LDW280 - 52357	B2		

ADD THE FOLLOWING NOTE

‡ SUBSTITUTION OF NAS1132V*, AN525-832R* OR AN525-832-* BOLTS FOR THE GB511J-08-* BOLT IS PERMISSIBLE

‡ USE NEXT AVAILABLE NUMBER.

THIS IS A RE-ISSUE OF LEO 280-314 ~ INCOMPLETE CHANGE NO'S ON ORIG ISSUE

(5)

DETAIL SPEC REQ	☐	CL II ENGRG CHG	☐	CL I ENGRG CHG	☐

REASON FOR EO: HARDWARE NOT AVAILABLE

DESCRIPTION OF EO: ON SH 3 ADDED NOTE *(‡)

GAEC EO RELEASE: 10/17

MODEL	PROCURING ACTIVITY NO.	GAEC UNIT NO.	SUB CONTR UNIT NO.
LM		LM-2 (32)	

DRAWING CHANGE REQD: REVISE DWG ✓ | RECORD EO

DISPOSITION OF PARTS: REWORK NOT | SCRAP REQD

	VDI	SUPPORT	RELIAB. GROUP	GROUP LEADER	STRESS GROUP	LIAISON ENGRG	PROJ ENGRG
APPROVED BY	JW	—	—	—	FW		
✓ DATE	10-14-66				10-17		10-12-66 10/15/66

PRIORITY: C

DRAWING TITLE: LINES INSTALLATIONS

DRAWING NO: LEO-280-

EO NO.: 314

ISSUED BY C.H. COHEN X7033 SECTION EQUIP LINES (VDI) GROUP NO. 332 PL 35

ENG 32.1 REV 3-65

GRUMMAN AIRCRAFT ENGINEERING CORP.
CODE IDENT NO. 26512
ENGINEERING ORDER

DWG. NO. LDW280-52354
EO NO. A5
CONTROL INFO NO. LDW280A-4467

REMOVE LDW280-16009-11 FROM BIM

SECT B-B ZONE 8A SH400
REMOVE LDW280-16009-11 FROM F/D
& ADD LDW280-16009-27(REF)

5

DETAIL SPEC REQ ☐ CL II ENGRG CHG ☐ CL I ENGRG CHG ☐

REASON FOR EO: TO MAKE DWG AGREE WITH INSTL

DESCRIPTION OF EO: ON-1 INSTL
REMOVED LDW280-16009-11 FROM BIM SECT B-B-ZONE 8A SH 400 REMOVED LDW280-16009-11 FROM F/D & ADD LDW280-16009-27(REF)

GAEC C EO RELEASE: LE 12/19/66

MODEL	PROCURING ACTIVITY NO.	GAEC UNIT NO.	SUB CONTR UNIT NO.
LM		LM-2(32)	

DRAWING CHANGE REQD: REVISE DWG ✓ RECORD EO
DISPOSITION OF PARTS: REWORK ✓ SCRAP

APPROVED BY	JW/CHC	—	—	—	mjm			
DATE	12-16-66				12-16-66		12-17-66	12-19-66
6	VD1	SUPPORT	RELIAB. GROUP	GROUP LEADER	STRESS GROUP	LIAISON ENGRG	PROJ ENGRG	GOVT

PRIORITY: C
DRAWING TITLE: LINES INSTL ENVIRONMENTAL CONTROL SUB-SYS EXT-MID-SECT
DRAWING NO.: LDW280-52354
EO NO.: A5

ISSUED BY ED BIANCHI X7033 SECTION EQUIPLINES GROUP NO. 332 PL 35

01

NAS 9-1100

ENG 32.1 REV 3-65

GRUMMAN AIRCRAFT ENGINEERING CORP.
CODE IDENT NO. 26512
ENGINEERING ORDER

DWG. NO. LEO 280
EO NO. 769
CONTROL INFO NO. LDW280B0076

DELETE NOTE * FROM THE FOLLOWING DWGS

DRAWING NUMBER	EFFECTIVITY	CHANGE NUMBER	NOTE *
LDW280-52353 ✓	LM-2(32)	C1	8
-52354 ✓	LM-2(32)	A6	3
-52355	LM-2(32)	D1	8
-52356	LM-2 (32)	A8	5
-52351	LM-2 (32)	A9	5
-52350	LM-2(32)	E1	31
LDW280-52608	LM-2(32)	D2	7

DETAIL SPEC REQ		CL II ENGRG CHG		CL I ENGRG CHG	✓ LCD 1961

REASON FOR EO: BONDING NOTE NOT REQD

DESCRIPTION OF EO: DELETED NOTE *

GAEC EO RELEASE: C

MODEL	PROCURING ACTIVITY NO.	GAEC UNIT NO.	SUB CONTR UNIT NO.
LM		LM-2(32)	

DRAWING CHANGE REQD: REVISE DWG	RECORD EO	DISPOSITION OF PARTS: REWORK	SCRAP	APPROVED BY / DATE		SUPPORT	RELIAB. GROUP	GROUP LEADER	STRESS GROUP	LIAISON ENGRG	PROJ ENGRG	
✓		NOT	REQD	E	VDI 10/24/67			10/26/67	10/27/67		10/28/67	10/30-67

PRIORITY: C
DRAWING TITLE: LINES INSTL PIPING ASCENT STAGE & DESCENT STAGE
DRAWING NO.: LEO280
EO NO.: 769

11-2-67
ISSUED BY J. DE VITA X1153 (10-25-67) SECTION EQUIP LINES (VDI) GROUP NO. 332 PL 25

01

NAS 9-1100

ENG 32.1 REV 3-65 B

GRUMMAN AIRCRAFT ENGINEERING CORP.
CODE IDENT NO. 26512
ENGINEERING ORDER *

DWG. NO. LDW280-52354		EO NO. A7
CONTROL INFO NO. LDW280B0205			

ON-1 INSTL

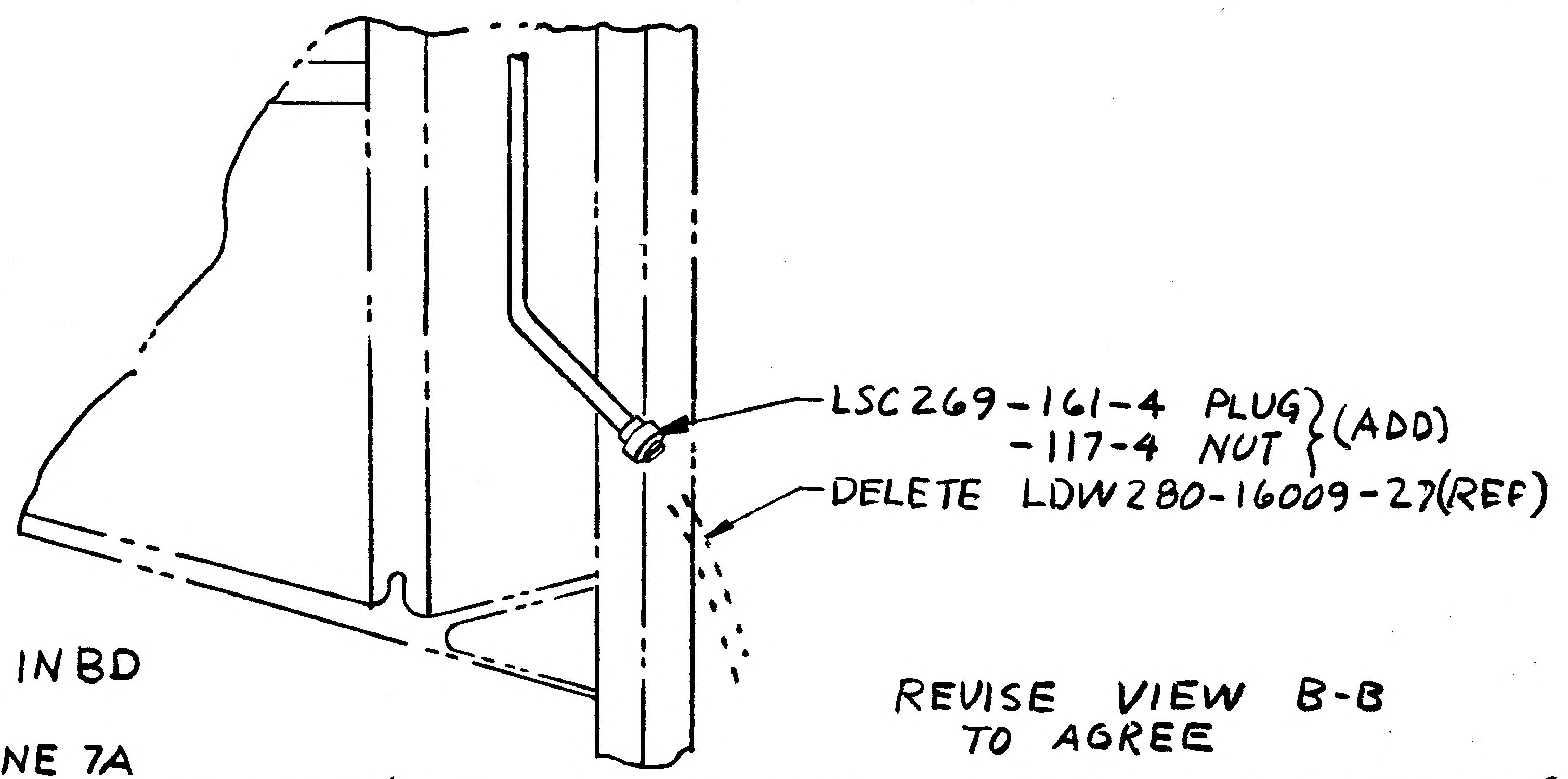

VIEW LOOKING INBD
R/H SIDE
SHEET 4 ZONE 7A

REVISE VIEW B-B
TO AGREE

DETAIL SPEC REQ		CL II ENGRG CHG		CL I ENGRG CHG	✓ LCD 2223	(5)

REASON FOR EO: DELETE H_2O LINE THROUGH CUTTER

DESCRIPTION OF EO:
ON-1 INSTL
DELETED LDW280-16009-27(REF)
ADDED LSC269-161-4 & -117-4

GAEC EO RELEASE: JK 11/2/67

MODEL	PROCURING ACTIVITY NO.	GAEC UNIT NO.	SUB CONTR UNIT NO.
LM		LM-2(32)	

DRAWING CHANGE REQD: REVISE DWG	RECORD EO	DISPOSITION OF PARTS: REWORK	SCRAP
✓		✓	

	VDI	SUPPORT	RELIAB. GROUP	GROUP LEADER	STRESS GROUP	LIAISON ENGRG	PROJ ENGRG	
APPROVED BY					CW			
DATE	11/1/67			11/1/67	11/1/67		11/1/67	11-2-67
H								

PRIORITY	DRAWING TITLE	DRAWING NO.	EO NO.
C	LINES INSTL ECS EXTERNAL MIDSECT A/S	LDW280-52354	A7

11-3-67
ISSUED BY HUGH RYAN X1392 11-1-67 SECTION VDI(EQUIP LINES) GROUP NO. 332 PL 25

01

NAS 9-1100

REVISIONS

CHANGE LTR	ITEM NO.	SHEET NO.	ZONE	GRUMMAN INFO ONLY	DET SPEC	CLASS I	CLASS II	ENGRG ORDER	DESCRIPTION	EFFECTIVITY	DISPOSITION OF EXISTING PARTS		CHANGED BY AND DATE	ENGRG APPD	GOVT APPD
											REWORK	SCRAP			
A	1	6.00	17C					A1	IN FLD (ON-1 INSTL. ADDED: SHIM AS REQD. .080 MAX--ETC (2 PLACES)	LM-2	✓		F BREYER 12/5/66		
	2	3.00						A2	ADDED NOTE: #5. SUBSTITUTION OF NAS1132V*, AN525-832R* OR AN525-832-* BOLTS FOR THE GB511J-08-* BOLT IS PERMISSIBLE.		✓				
	3	2.02 7.00	 26B	LAV330-344					ADDED: TO B/M & F/D LDW330M10023-5		✓				
	4	4.00 2.02 5.00 2.03 2.00 6.00	3B 6A 9B 18C	LAV330-447					ON-1 INSTL. DELETE PICTURE OF LSC330-224 (REF) & LDW280-16000-946ECW-4. FROM B/M & F/D ADDED: F/D & B/M LDW280-16000-1640ECW-4 & -1657 ECC-6, LSC269-161-4, LSC269-117-4 & LSC269-118-4 LDW360-21265-3 (2) (REF), LDW360-52276-1 & LDW360-52275-1		✓				
	5	4.00 2.03 2.02	3C						ON-1 INSTL F/D & B/M REMOVE LDW330M10028-3 ADDED: LDW330M10028-5		✓				
	6	4.00	3B 3C 4B 4C 6B						ON-1 INSTL. REVISED PICTURE OF LINES & CLAMP LOCATION TO AGREE WITH VEHICLE. DWG. CORR. ONLY		NOT	REQD		12-13-66	
		5.00	8A 8B 9A 9B 10B												
		6.00	17C												
	7	1.00							ON SH 1.00 ADDED SH 1.01 SH 1.00 OF 12 WAS SH 1.00 OF 11	LM-2	NOT	REQD			

FOR CONTINUATION OF REVISIONS SEE SHEET

GRUMMAN AIRCRAFT ENGRG CORP, BETHPAGE, L. I., NEW YORK			
SIZE B	CODE IDENT NO. 26512	LDW280-52355	A
SCALE NONE			SHEET 1.01

ENG 77.3 5-65

01

NAS 9-1100

								LDW280-16000		TUBE ASSY	SEE DWG						
N						1		-965 ECC-6	E								
						1		-964 ECW-4									
						1		-963 ECW-4									
						1		-1734 ECW-4									
						1		-961 ECW-4									
						1		-960 N-4									
						1		-959 N-4									
						1		-958 ECW-4									
						1		-957 ECW-4									
						1		-1806 ECC-6									
						1		-1807 ECC-6									
						1		-954 ECC-6									
						1		-953 ECW-4									
						1		-952 ECW-4									
						1		-951 N-4									
						1		-950 ECC-6									
						1		-1724 ECW-4									
								-1735 ECW-4									
						1		-945 ECC-6									
						1		-2009 ECC-6									
						1		-1271 ECC-6									
						1		-1836 ECC-4									
						1		-941 ECW-4									
						1		-2067 ECC-6									
					1			-938 OLP-4									
					1			-937 OLP-4									
N						1		-1265 ECC-6	E								
								LDW280-16000		TUBE ASSY	SEE DWG						
								LDW280-52355-3	E	LINES INSTL							
								LDW280-52355-1	E	LINES INSTL							
CL					-3	-1	CODE IDENT	PART NO.	I&T	NOMENCLATURE OR DESCRIPTION	MATERIAL	GOVT SPEC	COML SPEC	STOCK SIZE	PROCESS SYM	FINISH NO.	ZONE
QTY PER ASSEMBLY																	

CL = CLEANLINESS LEVEL

SYM OR NO.	PROCESS OR FINISH	GRUMMAN SPEC OR MILITARY SPEC	SYM OR NO.	PROCESS OR FINISH	GRUMMAN SPEC OR MILITARY SPEC	SYM OR NO.	PROCESS OR FINISH	GRUMMAN SPEC OR MILITARY SPEC

I & T: IDENTIFICATION AND TRACEABILITY IN ACCORDANCE WITH : NONE

GRUMMAN AIRCRAFT ENGRG CORP, BETHPAGE, L. I., NEW YORK

SIZE	CODE IDENT NO.		
B	26512	LDW280-52355	B (B)

SCALE NONE

SHEET 2.00

ENG 77.2 7-65

01

NAS 9-1100

CL					-3	-1	CODE IDENT	PART NO.	I&T	NOMENCLATURE OR DESCRIPTION	MATERIAL	GOVT SPEC	COML SPEC	STOCK SIZE	PROCESS SYM	FINISH NO.	ZONE
								LDW280-16000									
N						1		-2010 ECC-6	E	TUBE ASSY	SEE DWG						
						1		-1273 ECC-6									
						1		-1175 ECC-6									
						1		-1174 ECC-6									
					1			-1173 OLP-4									
					1			-1172 OLP-4									
					1			-1171 OLP-4									
						1		-1170 ECC-6									
					1			-1169 OLP-4									
						1		-2000 ECW-4									
						1		-1099 ECC-6									
						1		-1084 ECC-6									
						1		-994 ECC-4									
						1		-981 ECC-4									
						1		-979 ECC-6									
						1		-978 ECC-6									
						1		-977 ECC-6									
					1			-976 OLP-5									
						1		-1269 ECC-6									
						1		-1264 ECC-6									
						1		-973 ECC-6									
						1		-972 ECC-6									
						1		-971 ECC-6									
						1		-970 ECC-6									
						1		-969 ECC-4									
						1		-968 ECC-6									
						1		-967 ECC-6									
N						1		-966 ECC-6	E	TUBE ASSY	SEE DWG						
								LDW280-16000									

QTY PER ASSEMBLY

SYM OR NO.	PROCESS OR FINISH	GRUMMAN SPEC OR MILITARY SPEC	SYM OR NO.	PROCESS OR FINISH	GRUMMAN SPEC OR MILITARY SPEC	SYM OR NO.	PROCESS OR FINISH	GRUMMAN SPEC OR MILITARY SPEC

I&T: IDENTIFICATION AND TRACEABILITY IN ACCORDANCE WITH : NONE

GRUMMAN AIRCRAFT ENGRG CORP, BETHPAGE, L. I., NEW YORK

SIZE B | CODE IDENT NO. 26512 | LDW280-52355 | B

SCALE NONE | SHEET 2.01

ENG 77.2 7-65

01

NAS 9-1100

CL					-3	-1	CODE IDENT	PART NO.	I&T	NOMENCLATURE OR DESCRIPTION	MATERIAL	GOVT SPEC	COML SPEC	STOCK SIZE	PROCESS SYM	FINISH NO.	ZONE
QTY PER ASSEMBLY																	
N						1		LDW360-52276-1	E	TRANSDUCER INSTL	SEE DWG						
N						1		LDW360-21265-1	E	TRANSDUCER INSTL	SEE DWG						
N						1		LDW330M10028-5	E	ORIFICE	SEE DWG						
N						1		LDW330M10023-5	E	ORIFICE	SEE DWG						
N						1		LDW360-52275-1	E	TRANSDUCER INSTL	SEE DWG						
A						1		LDW280P16220-3	E	CLAMP, LINE SUPPORT	SEE DWG						
						1		LDW280P16213-3									
						3		LDW280P16213-1									
						5		LDW280P16211-1									
						2		LDW280P16210-1									
						2		LDW280P16209-1									
						3		LDW280P16208-1									
						1		LDW280P16207-1									
						1		LDW280P16206-1									
A						7		LDW280P16204-1	E	CLAMP, LINE SUPPORT	SEE DWG						
								LDW280-16000		TUBE ASSY	SEE DWG						
N						1		-1837ECC-4	E								
						1		-2014ECC-6									
						1		-1839ECC-4									
						1		-1268ECC-6									
						1		-1277ECC-6									
						1		-1276ECC-6									
						1		-1184ECC-6									
						1		-1274ECC-6									
						1		-1270ECC-6									
						1		-1267ECC-6									
						1		-1266ECC-6									
						1		-1272ECC-6									
						1		-1178ECC-6									
N						1		-1838ECC-4	E								
								LDW280-16000		TUBE ASSY	SEE DWG						

SYM OR NO.	PROCESS OR FINISH	GRUMMAN SPEC OR MILITARY SPEC	SYM OR NO.	PROCESS OR FINISH	GRUMMAN SPEC OR MILITARY SPEC	SYM OR NO.	PROCESS OR FINISH	GRUMMAN SPEC OR MILITARY SPEC

I&T: IDENTIFICATION AND TRACEABILITY IN ACCORDANCE WITH : NONE

GRUMMAN AIRCRAFT ENGRG CORP, BETHPAGE, L. I., NEW YORK

SIZE	CODE IDENT NO.		
B	26512	LDW280-52355	B
SCALE NONE		SHEET 2.02	

ENG 77.2 7-65

01

NAS 9-1100

01/02

NAS 9-1100

6
5
4
3
SECTION N-N
-1836 ECC-4(REF)
-1174 ECC-6(REF)
-2010 ECC-6(REF)
-950 ECC-6(REF)
-1184 ECC-6(REF)
-1277 ECC-6(REF)
-954 ECC-6(REF)
LDW280P16208-1(REF)
SECTION G-G
-1836 ECC-4(REF)
-1174 ECC-6(REF)
2010 ECC-6(REF)
-941 ECW-4(REF)
-950 ECC-6(REF)
-1184 ECC-6 (REF)
-1276 ECC-6(REF)
-954 ECC-6(REF)
LDW280P16206-1(REF)
FOR CONTINUATION OF LINES SEE SH 5.00 ZONE 9-A
SEE SH.200
LDW280P16207-1(1)
GC500J-D4T (1)
GC500J-D6T (1)
GB51IJ-08-25(2)
AN960 DBL(4)
MS21042L08(2)
-950 ECC-6
-1184 ECC-6
LSC269-118-6
-1267 ECC-6
-2010 ECC-6
-1174 ECC-6(REF)
-1278 ECC-6(REF)
LSC 269-131-6(2)
LSC 269-118-6(4)
LDW280P16208-1(3)
GB51IJ-08-22(6)
AN960DBL(12)
MS21042L08(6)
-1836 ECC-4(REF)
LSC 269-118-4
N
-2010 ECC-6(REF)
-1277 ECC-6
-954 ECC-6
GC500J-D6T
GB51IJ-08-1
AN960DBL(2)
MS21042L08
LSC269-118-6
-1276 ECC-6
-967 ECC-6
LSC 269-118-6(2)
LSC 269-118-4(2) (-3 ONLY)
LSC 269-118-5(-3 ONLY)
-951 N-4
-952 ECW-4
-953 ECW-4
GC500J-L4T(2)
GB51IJ-08-1(2)
AN960DBL(4)
MS21042L08(2)
LDW280P16206-1(1)
GB51IJ-08-22(2)
AN960DBL(4)
MS21042L08(2)
GC500J-D4T(7)
GB51IJ-08-K(7)
AN960DBL(14)
MS21042L08(7)
-811 ECC-6(REF)
-994 ECC-4
-1184 ECC-6(REF)
-950 ECC-6(REF)
GC500J-D6T(1)
GB51IJ-08-1(2)
AN960DBL(4)
MS21042L08(2)
LDW280P16209-1(2)
GC500J-D4T(2)
GB51IJ-08-14(2)
GB51IJ-08-15(2)
AN960DBL(8)
MS21042L08(4)
LSC269-118-6(2)
G
-954 ECC-6(REF)
C
LSC 269-135-6
LSC 269-118-6(2)
LSC 269-118-4
-941 ECW-4(REF)
-963 ECW-4
-945 ECC-6
-1724 ECW-4
LSC 269-131-4
LSC 269-118-4(3)
GT15A-1 SEE NOTE 7
-964 ECW-4
LSC269-118-4(5)
FOR CONTINUATION OF LINE RUN SEE DWG LDW280-52354
-941 ECW-4
-1837 ECC-4
LSC 269-118-4
LDW3-0M1008 5
-2009 ECC-6
-2007 ECC-6
LSC 269-118-6
-1836 ECC-4
-2014 ECC-6
LSC269-118-6(4)
GC500J-D4T(3)
GB51IJ-08-1(3)
AN960DBL(6)
MS21042L08(3)
-1100 ECN-4
LSC269-118-4
+Y 17.250
-2000 ECW-4
-1174 ECC-6
LSC269-118-6(2)
LDW360-21265-3(REF)
LDW360-21265-3
LSC 330-425-1-3
LSC 269-118-4(2)
LDW280-16070-1
GB51IJ-08-1(2)
AN960DBL(2)
LSC 330-224 (REF)
+X 310.50
-1838 ECC-4
-1839 ECC-4
LDW280-16070-1
GB51IJ-08-1(2)
AN960DBL(2)
LINES IN THIS AREA CONTINUED ON SH 8.00
-937 OLP-5
-1108 ECW-4(REF)
FOR CONTINUATION SEE DWG LDW280-52354
GC500J-D4T(2)
GB51IJ-08-1(2)
AN960DBL(4)
MS21042L08(2)
(-3 ONLY)
-1760 OLP-5
(-3 ONLY)
GC500J-D5T(1)
GB51IJ-08-1(1)
AN960DBL(2)
MS21042L08(1)
(-3 ONLY)
-964 ECC-6
-971 ECC-6
LSC 269-118-4
-970 ECC-6
LSC 330-214 PRI PRESSURE (REF)
LSC 330-214 PRI RETURN (REF)
LDW 360-52276-1
SEE SH.200
LSC 269-131-6(2)
LSC 269-118-6(9)
+X 241.50(REF)
+X 246.50(REF)
+X 244.88(REF)
-Z 32.00 (REF)
-963 ECC-6
-977 ECC-6
-1277 ECC-6 (REF)
-Z 27.00
SECTION B-B
+X 253.50
+X 294.643
LDW280-52355-1 INSTL.
LDW280-52355-3 INSTL. (O_2 SYSTEM)
VIEW LOOKING FORWARD
-Z 27.00 BULKHEAD RIGHT HAND SIDE
-811 ECC-6(REF)
-1174 ECC-6(REF)
-Z 29.50
-941 ECW-4(REF)
-1276 ECC-6(REF)
-2009 ECC-6(REF)
-1836 ECC-4(REF)
-941 ECW-4(REF)
-2007 ECC-6(REF)
-2009 ECC-6(REF)
-1836 ECC-4(REF)
-Z 27.00
SECTION C-C

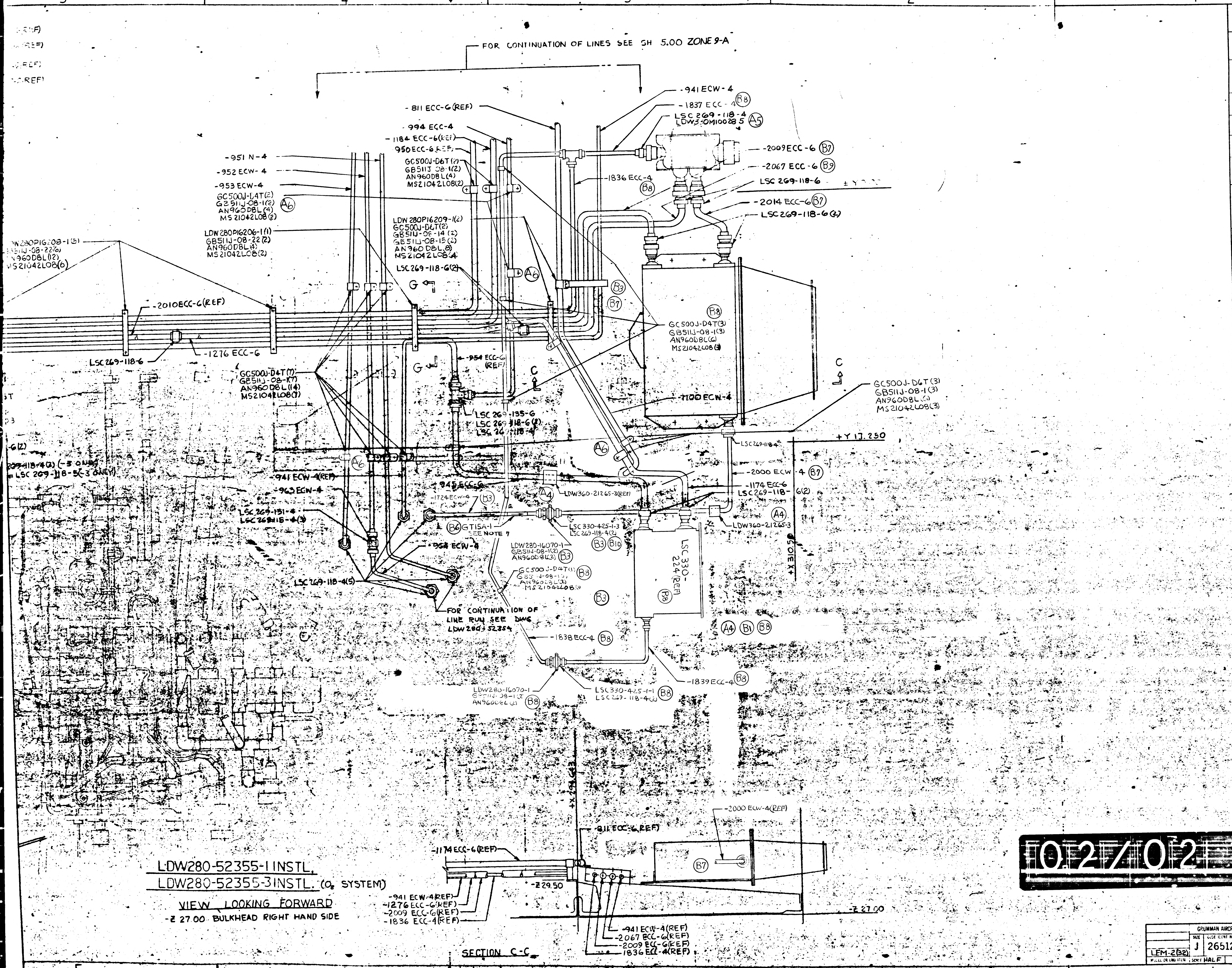

FOR CONTINUATION OF LINES SEE SH 5.00 ZONE 9-A
-941 ECW-4
-1837 ECC-4 (B8)
LSC 269-118-4
LDW3-OM10028 5 (A5)
-811 ECC-6(REF)
-994 ECC-4
-1184 ECC-6(REF)
950 ECC-6 REF
GC500J-D6T(2)
GB511J-08-1(2)
AN960D8L(4)
MS21042L08(2)
-951 N-4
-952 ECW-4
-953 ECW-4
GC500J-D4T(2)
GB511J-08-1(2)
AN960D8L(4)
MS21042L08(2) (A6)
-2009 ECC-6 (B7)
-2067 ECC-6 (B9)
-1836 ECC-4 (B8)
LSC 269-118-6
-2014 ECC-6 (B7)
LSC 269-118-6(2)
LDW 280P16209-1(2)
GC500J-D6T(2)
GB511J-08-14(2)
GB511J-08-15(2)
AN960D8L(8)
MS21042L08(4)
LDW280P16206-1(1)
GB511J-08-22(2)
AN960D8L(4)
MS21042L08(2)
LSC 269-118-6(2)
G
-2010 ECC-6(REF)
LSC 269-118-6
-1276 ECC-6
GC500J-D4T(3)
GB511J-08-1(3)
AN960D8L(6)
MS21042L08(3)
(B8) (B3) (B7) (A6)
-954 ECC-6 (REF)
C
GC500J-D4T(7)
GB511J-08-1(7)
AN960D8L(14)
MS21042L08(7)
LSC 269-135-6
LSC 269-118-6(2)
LSC 269-118-4
-1100 ECN-4
GC500J-D6T(3)
GB511J-08-1(3)
AN960D8L(6)
MS21042L08(3)
+Y 17.250
LSC 269-118-4
-2000 ECW-4 (B7)
-1174 ECC-6
LSC 269-118-6(2)
(A4)
LDW360-21265-3
-941 ECW-4(REF)
-963 ECW-4
-945 ECC-6
LDW360-21265-3(REF)
-1724 ECW-4
LSC 269-131-4
LSC 269-118-4(3)
(B6) GT15A-1 SEE NOTE 7
-958 ECW-4
LSC 330-425-1-3
LSC 269-118-4(2)
(B3) (B10)
LDW280-16070-1
GB511J-08-1(2)
AN960D8L(2)
GC500J-D4T(3)
GB511J-08-1(3)
AN960D8L(3)
MS21042L08(3)
LSC 330-224(REF)
+X 310.95
LSC 269-118-4(5)
FOR CONTINUATION OF LINE RUN SEE DWG LDW280-52354
-1838 ECC-4 (B8)
(A4) (B1) (B8)
-1839 ECC-4 (B8)
LDW280-16070-1
GB511J-08-1(2)
AN960D8L(2) (B8)
LSC 330-425-1-1
LSC 269-118-4(2) (B8)
+X 294.613
-2000 ECW-4(REF)
-811 ECC-6(REF)
-1174 ECC-6(REF)
-Z 29.50
(B7)
-Z 27.00
-941 ECW-4(REF)
-1276 ECC-6(REF)
-2009 ECC-6(REF)
-1836 ECC-4(REF)
-941 ECW-4(REF)
-2067 ECC-6(REF)
-2009 ECC-6(REF)
-1836 ECC-4(REF)

LDW280-52355-1 INSTL,
LDW280-52355-3 INSTL. (O_2 SYSTEM)

VIEW LOOKING FORWARD
-Z 27.00 BULKHEAD RIGHT HAND SIDE

SECTION C-C

MANUFACTURING OPERATIONS

02/02 NAS 9-1100

GRUMMAN AIRCRAFT ENGRG CORP., BETHPAGE, L.I., NEW YORK

LEM-2(B2)	J	26512	LDW280-52355 B
SCALE HALF			SHEET 4.00

LDW280-52355 B

THIS IS AN ORIGINAL DRAWING

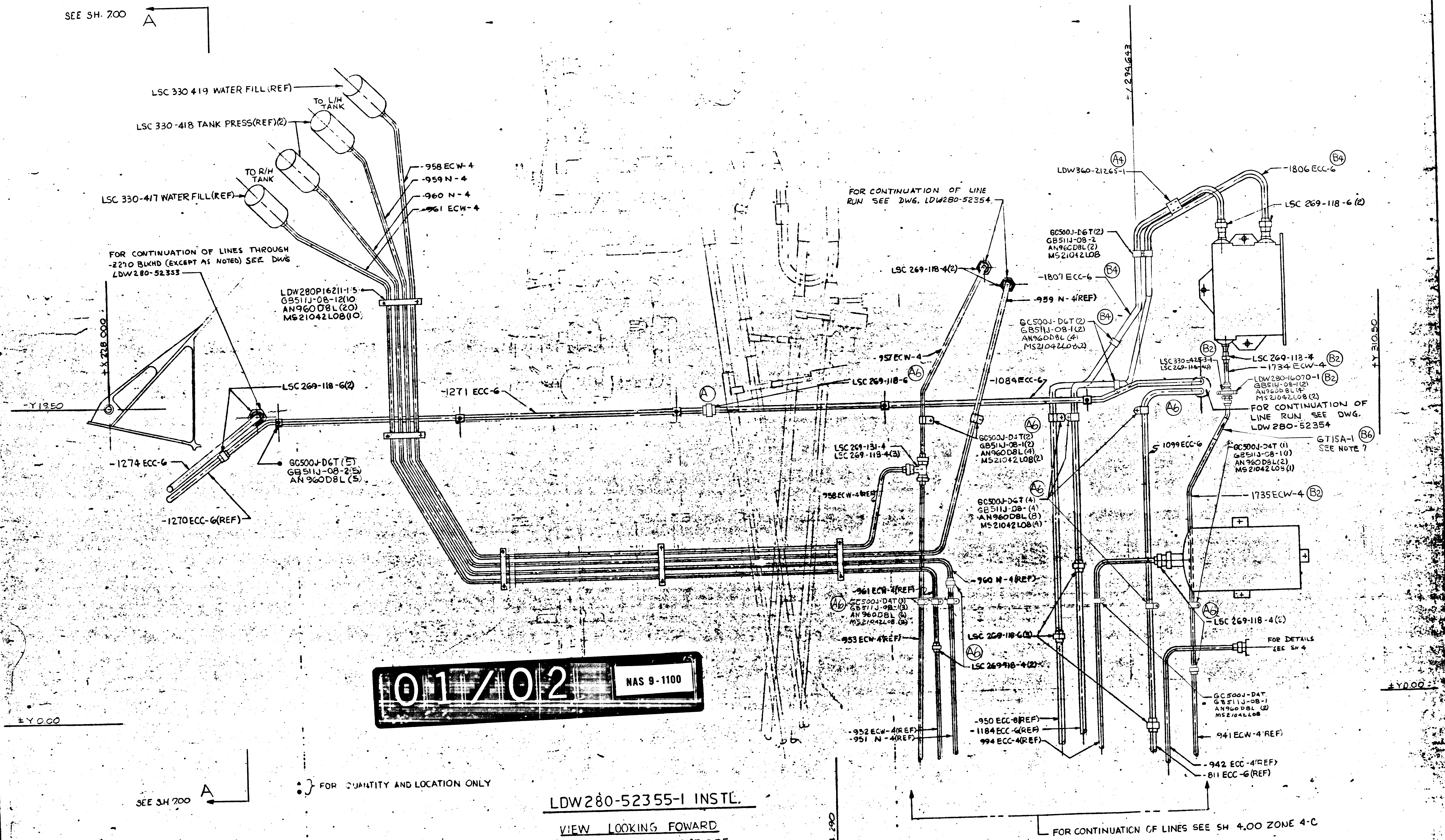
SEE SH. 7.00
A
LSC 330 419 WATER FILL (REF)
TO L/H TANK
LSC 330-418 TANK PRESS (REF)(2)
TO R/H TANK
LSC 330-417 WATER FILL (REF)
-958 ECW-4
-959 N-4
-960 N-4
-961 ECW-4
FOR CONTINUATION OF LINES THROUGH -Z27.0 BLKHD (EXCEPT AS NOTED) SEE DWG LDW280-52353
+X 228.000
-Y 13.50
LDW280P16211-1(5)
GB511J-08-12(10)
AN960D8L(20)
MS21042L08(10)
LSC 269-118-6(2)
-1271 ECC-6
-1274 ECC-6
GC500J-D6T(5)
GB511J-08-2(5)
AN960D8L(5)
-1270 ECC-6(REF)
FOR CONTINUATION OF LINE RUN SEE DWG. LDW280-52354
LSC 269-118-4(2)
-959 N-4(REF)
-957 ECW-4
LSC 269-118-6
A6
A
-1084 ECC-6
LDW360-21265-1
A4
-1806 ECC-6
B4
LSC 269-118-6(2)
GC500J-D6T(2)
GB511J-08-2
AN960D8L(2)
MS21042L08
-1807 ECC-6
B4
GC500J-D6T(2)
GB511J-08-1(2)
AN960D8L(4)
MS21042L08(2)
B4
B2
LSC 330-425-3-1
LSC 269-118-4(2)
LSC 269-113-4
B2
-1734 ECW-4
LDW280-16070-1
B2
GB511J-08-1(2)
AN960D8L(4)
MS21042L08(2)
FOR CONTINUATION OF LINE RUN SEE DWG. LDW280-52354
A6
GT15A-1
B6
SEE NOTE 7
+Y 310.50
+Y 294.643
GC500J-D4T(2)
GB511J-08-1(2)
AN960D8L(4)
MS21042L08(2)
A6
LSC 269-131-4
LSC 269-118-4(3)
1099 ECC-6
GC500J-D4T (1)
GB511J-08-1(1)
AN960D8L(2)
MS21042L08(1)
958 ECW-4(REF)
A6
GC500J-D6T (4)
GB511J-08-(4)
AN960D8L(8)
MS21042L08(4)
-1735 ECW-4
B2
-960 N-4(REF)
-961 ECW-4(REF)
A6
GC500J-D4T(3)
GB511J-08-1(3)
AN960D8L(6)
MS21042L08(3)
-953 ECW-4(REF)
LSC 269-118-6(3)
A6
LSC 269-118-4(2)
A6
LSC 269-118-4(2)
FOR DETAILS SEE SH 4
±Y0.00
GC500J-D4T
GB511J-08-1
AN960D8L (2)
MS21042L08
-950 ECC-8(REF)
-1184 ECC-6(REF)
994 ECC-4(REF)
-952 ECW-4(REF)
-951 N-4(REF)
941 ECW-4(REF)
-942 ECC-4(REF)
-811 ECC-6(REF)
±Y0.00
+X 274.290
FOR CONTINUATION OF LINES SEE SH 4.00 ZONE 4-C
SEE SH 7.00
A
•} FOR QUANTITY AND LOCATION ONLY
12
11
10
9
8
C
B
A

01/02 NAS 9-1100

LDW280-52355-1 INSTL.

VIEW LOOKING FOWARD

-Z 27.00 BULKHEAD - LEFT HAND SIDE

11 10 9 8 7

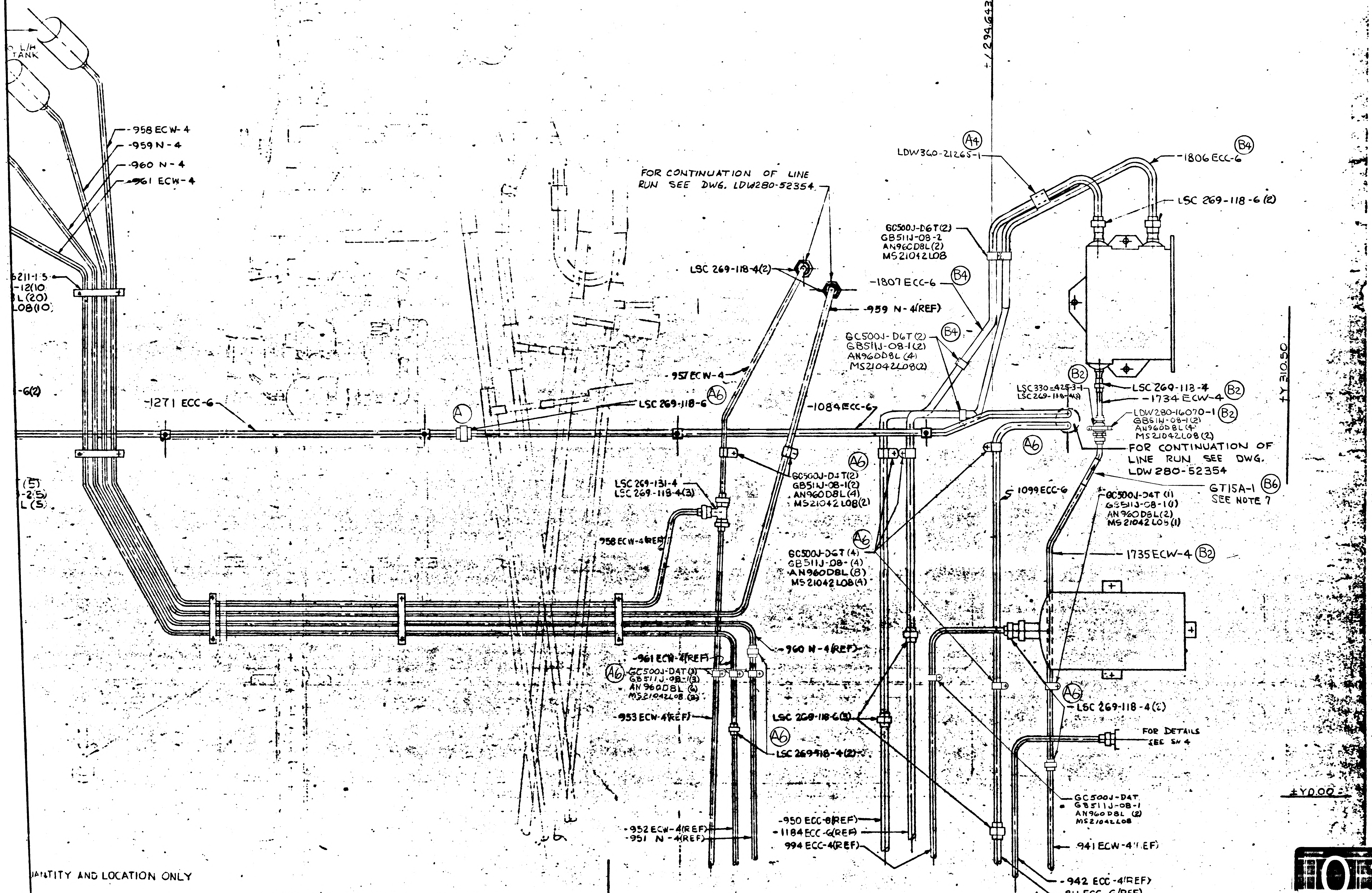

L/H TANK
-958 ECW-4
-959 N-4
-960 N-4
-961 ECW-4
6211-1-5
-12(10
L(20)
L08(10)
-6(2)
(5)
-2(5)
L(5)
-1271 ECC-6
A
FOR CONTINUATION OF LINE RUN SEE DWG. LDW280-52354
LSC 269-118-4(2)
-959 N-4(REF)
-957 ECW-4
A6
LSC 269-118-6
-1084 ECC-6
LSC 269-131-4
LSC 269-118-4(3)
958 ECW-4(REF)
GC500J-D4T(2)
GB511J-08-1(2)
AN960D8L(4)
MS21042L08(2)
A4
LDW360-21265-1
B4
-1806 ECC-6
LSC 269-118-6(2)
GC500J-D6T(2)
GB511J-08-2
AN960D8L(2)
MS21042L08
-1807 ECC-6
GC500J-D6T(2)
GB511J-08-1(2)
AN960D8L(4)
MS21042L08(2)
B2
LSC 330-425-3-1
LSC 269-118-4(2)
LSC 269-113-4
-1734 ECW-4
LDW280-16070-1
GB511J-08-1(2)
AN960D8L(4)
MS21042L08(2)
FOR CONTINUATION OF LINE RUN SEE DWG. LDW280-52354
1099 ECC-6
GT15A-1
B6
SEE NOTE 7
GC500J-D4T(1)
GB511J-08-1(1)
AN960D8L(2)
MS21042L05(1)
GC500J-D6T(4)
GB511J-08-(4)
AN960D8L(8)
MS21042L08(4)
1735 ECW-4
-961 ECW-4(REF)
-960 N-4(REF)
GC500J-D4T(3)
GB511J-08-1(3)
AN960D8L(6)
MS21042L08(3)
-953 ECW-4(REF)
LSC 269-118-6(3)
LSC 269-118-4(2)
LSC 269-118-4(2)
FOR DETAILS SEE SH 4
GC500J-D4T
GB511J-08-1
AN960D8L (2)
MS21042L08
-952 ECW-4(REF)
-951 N-4(REF)
-950 ECC-8(REF)
-1184 ECC-6(REF)
994 ECC-4(REF)
941 ECW-4(REF)
-942 ECC-4(REF)
-811 ECC-6(REF)
+Z 294.643
+Y 310.50
±Y0.00

ANTITY AND LOCATION ONLY

FOR CONTINUATION OF LINES SEE SH 4.00 ZONE 4-C

+X 274.290

LDW280-52355-1 INSTL.

VIEW LOOKING FOWARD

-Z 27.00 BULKHEAD - LEFT HAND SIDE

MANUFACTURING OPERATIONS
UNLESS OTHERWISE SPECIFIED
NOTES CHECKED ✓ APPLY TO THIS DWG.

- PART NUMBER AND ALL OTHER MARKINGS IN REGION MARKED ▭ USE BOTH SIDES IF NECESSARY.
- FILLET AND INSIDE CORNER RADII TOLERANCES
  - .016R TO .062R ± .010
  - .063R TO .250R ± .015
  - OVER .250R ± .030
- DEPTH SHOWN FOR TAPPED HOLES IS FULL THDS. 2-3 IMP THDS. BEYOND PERMISSIBLE.
- EXTERNAL THREAD LENGTH SHOWN INCLUDES 2 IMPERFECT THREADS MAX.
- DO NOT CADMIUM PLATE & PAINT HOLES OR SURFACES MARKED WITH DOUBLE ASTERISK.
- MISMATCH STEP OF ± .005 PERMISSIBLE DUE TO CHANGE OF CUTTERS AT INSIDE INTERSECTING SURFACES.
- DIAMETERS MARKED MUST BE CONCENTRIC WITHIN FULL INDICATOR READING
- HOLES MUST BE KEPT FREE OF CHROME PLATING SOLUTION.
- ALL DIMENSIONS SHOWN TO BE MET AFTER CADMIUM PLATING. THICKNESS OF PLATE .0003 MIN. TO .0005 MAX. MIN. THICKNESS TO BE .0002 ON THREADED AREAS. NO ALLOWANCE FOR PLATING IN HOLES
- 125 √ SURFACE ROUGHNESS INCLUDING REAMED HOLES PER MIL-STD-10
- 250 √ FOR ALL DRILLED HOLES
- REMOVE ALL BURRS. BREAK ALL EDGES .005-.015
- INSPECTION INFORMATION MINIMUM PERMISSIBLE AVERAGE EDGE DISTANCE MARKED IS
- SYMBOL ƒ DENOTES SURFACE TO BE MACHINED
- UNLESS OTHERWISE SPECIFIED TOLERANCE ON FLANGES IS ± 1/32
- LENGTHS OF AN, NAS & MS AN RIVETS SHORTER THAN [illegible] NOT SPECIFIED.
- TOLERANCE ON LOFTED DELINEATIONS IS [illegible]

DWG SIZE 36 X
PRINTING AREA ONLY

LDW280-52355 B

02/02 NAS 9-1100

	GRUMMAN AIRCRAFT ENGRG CORP., BETHPAGE, L.I., NEW YORK			
LEM-2(32)	SIZE J	CODE IDENT NO. 26512	LDW280-52355	B
MODEL OR END ITEM	SCALE HALF		SHEET 5.00	

③

THIS IS AN A ORIGINAL DRAWING

01/02 NAS 9-1100

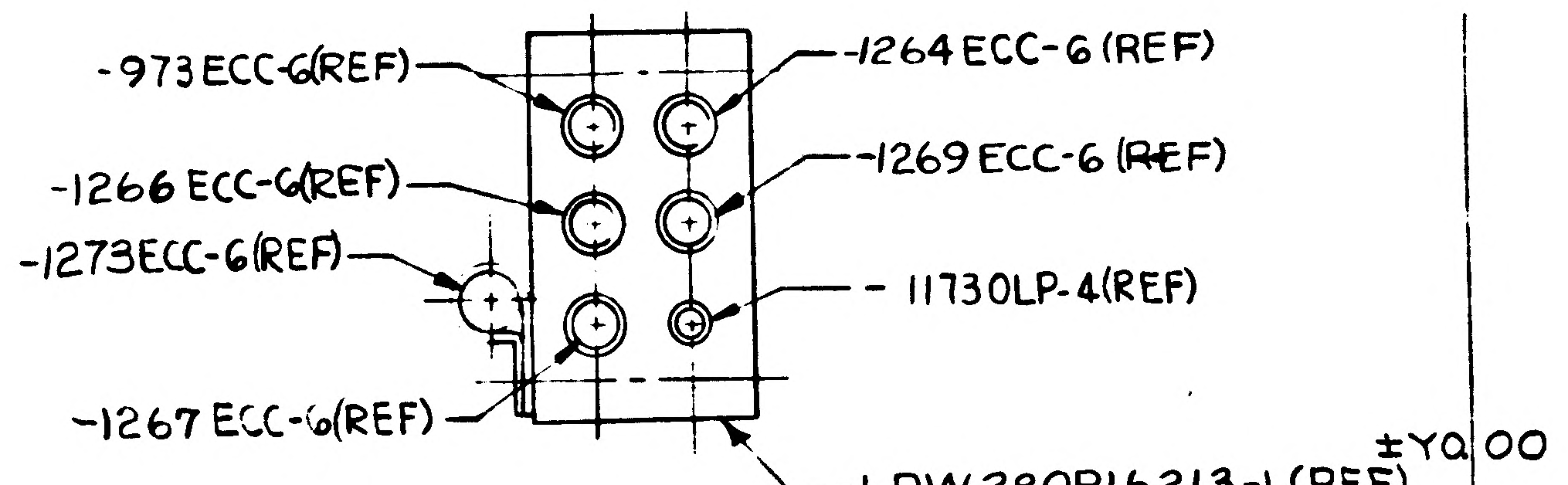
-973 ECC-6(REF)
-1264 ECC-6 (REF)
-1266 ECC-6(REF)
-1269 ECC-6 (REF)
-1273ECC-6(REF)
- 11730LP-4(REF)
-1267 ECC-6(REF)
LDW 280P16213-1 (REF)
±Y0.00

SECTION P-P

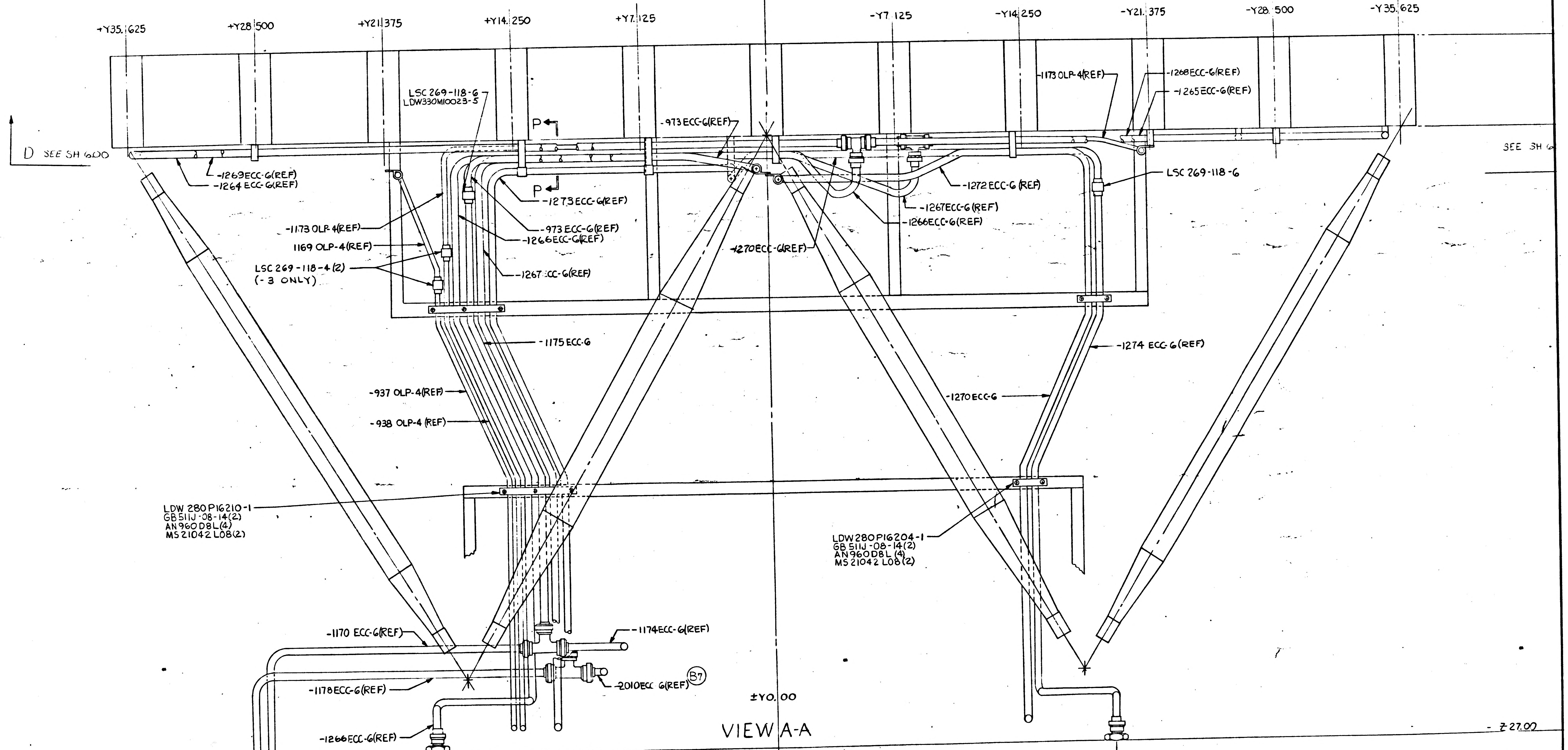
+Y35.625
+Y28.500
+Y21.375
+Y14.250
+Y7.125
-Y7.125
-Y14.250
-Y21.375
-Y28.500
-Y35.625
D SEE SH 600
SEE SH 6
LSC 269-118-6
LDW330M10023-5
P
P
-973 ECC-6(REF)
-1173 OLP-4(REF)
-1268ECC-6(REF)
-1265ECC-6(REF)
-1269ECC-6(REF)
-1264 ECC-6(REF)
-1273ECC-6(REF)
-1272 ECC-6 (REF)
LSC 269-118-6
-1267ECC-6(REF)
-1266ECC-6(REF)
-1173 OLP-4(REF)
1169 OLP-4(REF)
LSC 269-118-4(2)
(-3 ONLY)
-973 ECC-6(REF)
-1266ECC-6(REF)
-1267 ECC-6(REF)
-1270ECC-6(REF)
-1175 ECC-6
-1274 ECC-6(REF)
-937 OLP-4(REF)
-938 OLP-4 (REF)
-1270 ECC-6
LDW 280P16210-1
GB511J-08-14(2)
AN960D8L(4)
MS21042 L08(2)
LDW280P16204-1
GB 511J-08-14(2)
AN960D8L(4)
MS21042 L08(2)
-1170 ECC-6(REF)
-1174ECC-6(REF)
-1178ECC-6(REF)
-2010ECC 6(REF)
B7
±Y0.00
-1266ECC-6(REF)
-Z27.00
PRESSURE TO D/S
RETURN FROM D/S
+Y19.00 (REF)
FLOW
-Y19.00(REF)
RETURN

VIEW A-A

LDW280-52355-1 INSTL.

LDW280-52355-3 INSTL.

VIEW LOOKING DOWN

+X 235.00

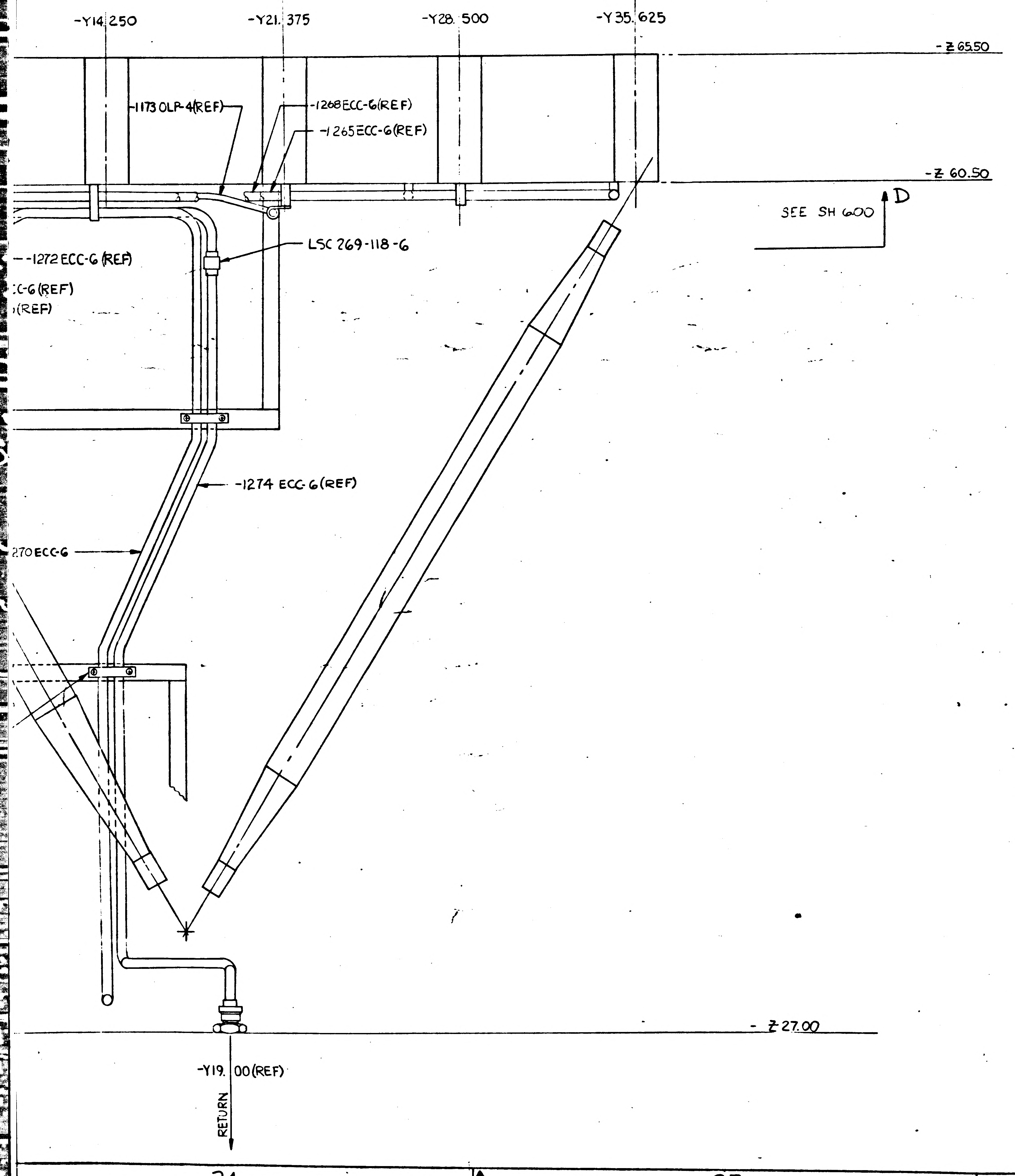

MANUFACTURING OPERATIONS
UNLESS OTHERWISE SPECIFIED
NOTES CHECKED √ APPLY TO THIS DWG.

PART NUMBER AND ALL OTHER MARKINGS IN REGION MARKED ▭ USE BOTH SIDES IF NECESSARY.

FILLET AND INSIDE CORNER RADII TOLERANCES
.016R TO .062R ± .010
.063R TO .250R ± .015
OVER .250R ± .030

DEPTH SHOWN FOR TAPPED HOLES IS FULL THDS. 2-3 IMP THDS. BEYOND PERMISSIBLE.

EXTERNAL THREAD LENGTH SHOWN INCLUDES 2 IMPERFECT THREADS MAX.

DO NOT CADMIUM PLATE & PAINT HOLES OR SURFACES MARKED WITH DOUBLE ASTERISK.

MISMATCH STEP OF ± .005 PERMISSIBLE DUE TO CHANGE OF CUTTERS AT INSIDE INTERSECTING SURFACES.

DIAMETERS MARKED MUST BE CONCENTRIC WITHIN FULL INDICATOR READING

HOLES MUST BE KEPT FREE OF CHROME PLATING SOLUTION.

ALL DIMENSIONS SHOWN TO BE MET AFTER CADMIUM PLATING. THICKNESS OF PLATE .0003 MIN. TO .0005 MAX. MIN. THICKNESS TO BE .0002 ON THREADED AREAS. NO ALLOWANCE FOR PLATING IN HOLES

125 √ SURFACE ROUGHNESS INCLUDING REAMED HOLES PER MIL-STD-10

200 √ FOR ALL DRILLED HOLES

REMOVE ALL BURRS. BREAK ALL EDGES .015-.031

INSPECTION INFORMATION MINIMUM PERMISSIBLE AVERAGE EDGE DISTANCE MARKED IS

SYMBOL √ DENOTES SURFACE TO BE MACHINED

UNLESS OTHERWISE SPECIFIED TOLERANCE ON FLANGES IS ± 1/32

LENGTHS OF AN, NAS & MS AL ALY RIVETS SHORTER THAN 1 INCH ARE NOT SPECIFIED.

TOLERANCE ON LOFTED DELINEATIONS IS

DWG SIZE 34 X

PRINTING INFO ONLY
FULL SIZE SHEET AREA (36 X)= SQ. FT.
1/2 SIZE SHEET AREA (1/4 OF FULL)= SQ. FT.

PRINT TRIM LINE

LDW280-52355B

LDW280-52355B

02/02

NAS 9-1100

GRUMMAN AIRCRAFT ENGRG CORP., BETHPAGE, L. I., NEW YORK

MODEL OR END ITEM	SIZE	CODE IDENT NO.		
LEM-2(32)	J	26512	LDW280-52355	B

SCALE HALF
SHEET 7.00

THIS IS AN ORIGINAL DRAWING

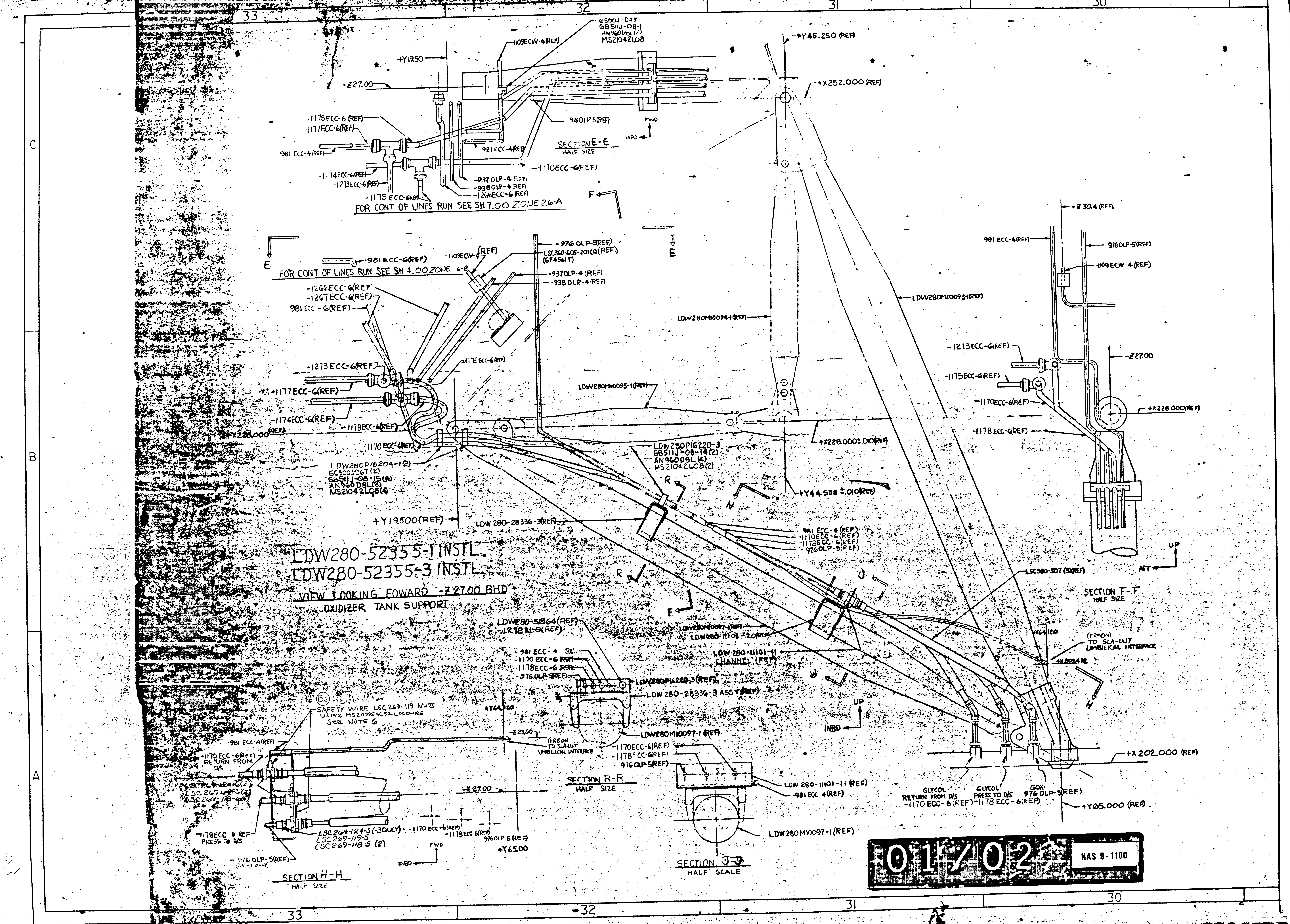

LDW280-52355-1 INSTL
LDW280-52355-3 INSTL
VIEW LOOKING FOWARD -Z27.00 BHD
OXIDIZER TANK SUPPORT
SECTION E-E
HALF SIZE
FOR CONT OF LINES RUN SEE SH 7.00 ZONE 26-A
FOR CONT OF LINES RUN SEE SH 4.00 ZONE 6-B
G500J-D6T
GB511J-08-1
AN960D8L(2)
MS21042L08
-1109ECW-4(REF)
+Y19.50
-Z27.00
-1178ECC-6(REF)
-1177ECC-6(REF)
981 ECC-4(REF)
-1174ECC-6(REF)
-1273ECC-6(REF)
-1175 ECC-6(REF)
-9760LP 5(REF)
981 ECC-4(REF)
-1170ECC-6(REF)
-9370LP-4 (REF)
-9380LP-4 (REF)
-1266ECC-6 (REF)
FWD
INBD
F
E
+Y45.250 (REF)
+X252.000(REF)
LDW280M10093-1(REF)
LDW280M10094-1(REF)
LDW280M10095-1(REF)
-976 OLP-5(REF)
-1109ECW-4(REF)
LSC360-605-2011(1)(REF)
(GF4561T)
-9370LP-4 (REF)
-938 OLP-4 (REF)
-981 ECC-6(REF)
-1266ECC-6(REF)
-1267ECC-6(REF)
981 ECC-6(REF)
-1273 ECC-6(REF)
-1175 ECC-6(REF)
-1177ECC-6(REF)
-1174ECC-6(REF)
-1178ECC-6(REF)
+X228.000(REF)
-1170 ECC-6(REF)
LDW280P16204-1(2)
GC500JD6T(2)
GB511J-08-15(4)
AN960D8L(8)
MS21042L08(4)
LDW280P16220-3
GB511J-08-14(2)
AN960D8L(4)
MS21042L08(2)
+X228.000±.010(REF)
+Y44.538±.010(REF)
+Y19500(REF)
LDW 280-28336-3(REF)
R
H
981 ECC-4(REF)
-1170ECC-6(REF)
-1178ECC-6(REF)
-9760LP-5(REF)
LSC330-507(3)(REF)
J
LDW280M10097-1(REF)
LDW280-11101-20(REF)
LDW 280-11101-11
CHANNEL (REF)
(FREON)
TO SLA-LUT
UMBILICAL INTERFACE
+X202.000 (REF)
+Y64.120
GLYCOL
RETURN FROM D/S
-1170 ECC-6(REF)
GLYCOL
PRESS TO D/S
-1178 ECC-6(REF)
GOX
976 OLP-5(REF)
+Y65.000 (REF)
-Z30.4(REF)
-981 ECC-4(REF)
9760LP-5(REF)
-1109ECW-4(REF)
-1273ECC-6(REF)
-1175ECC-6(REF)
-1170ECC-6(REF)
-1178ECC-6(REF)
-Z27.00
+X228.000(REF)
UP
AFT
SECTION F-F
HALF SIZE
LDW280-51364(REF)
-LR78 N-8(REF)
-981 ECC-4 (REF)
-1170 ECC-6 (REF)
-1178ECC-6(REF)
-976OLP-5(REF)
LDW280P16220-3(REF)
LDW 280-28336-3 ASSY(REF)
LDW280M10097-1(REF)
-1170ECC-6(REF)
-1178ECC-6(REF)
976OLP-5(REF)
UP
INBD
SECTION R-R
HALF SIZE
LDW 280-11101-11 (REF)
-981 ECC 4(REF)
LDW280M10097-1(REF)
SECTION J-J
HALF SCALE
B5
SAFETY WIRE LSC269-119 NUTS
USING MS20995NC32 LOCKWIRE
SEE NOTE 6
+Y64.120
-Z23.00
(FREON
TO SLA-LUT
UMBILICAL INTERFACE
-981 ECC-4(REF)
-1170ECC-6(REF)
RETURN FROM
D/S
LSC269-124-5
LSC269-119-5
LSC269-118-5
-Z27.00
LSC269-124-5(-3 ONLY)
LSC269-119-5
LSC269-118-5 (2)
-1170 ECC-6(REF)
-1178ECC 6(REF)
9760LP 5(REF)
+Y65.00
-1178ECC 6 REF
PRESS TO D/S
-976 OLP-5(REF)
(ON -3 ONLY)
FWD
INBD
SECTION H-H
HALF SIZE
33
32
31
30
C
B
A

01/02

NAS 9-1100

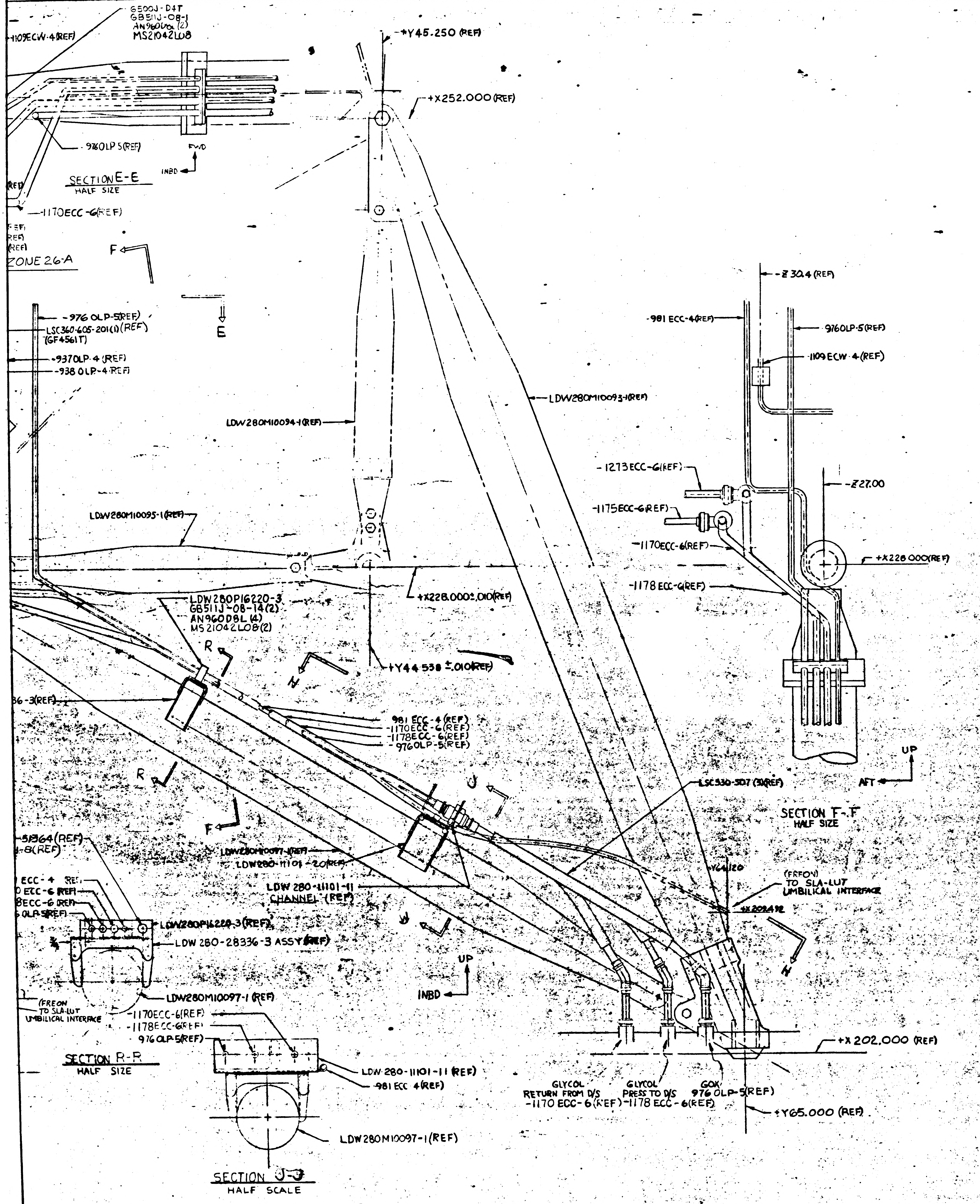
G500J-D4T
GB511J-08-1
AN960D8L(2)
MS21042L08
-1109ECW-4(REF)
+Y45.250 (REF)
+X252.000 (REF)
-976OLP5(REF)
FWD
INBD
SECTION E-E
HALF SIZE
(REF)
-1170ECC-6(REF)
ZONE 26-A
F
E
-976 OLP-5(REF)
LSC360-605-201(1)(REF)
(GF4561T)
-937OLP-4 (REF)
-938 OLP-4 (REF)
LDW280M10094-1(REF)
LDW280M10093-1(REF)
LDW280M10095-1(REF)
+X228.000±.010(REF)
LDW280P16220-3
GB511J-08-14(2)
AN960D8L(4)
MS21042L08(2)
R
H
+Y44.538 ±.010(REF)
36-3(REF)
981 ECC-4 (REF)
-1170ECC-6(REF)
-1178ECC-6(REF)
-976OLP-5(REF)
R
F
J
-51364(REF)
-8(REF)
LDW280M10097-1(REF)
LDW280-11101-20(REF)
LDW 280-11101-11
CHANNEL (REF)
ECC-4 (REF)
ECC-6 (REF)
8ECC-6 (REF)
OLP-5(REF)
LDW280P16220-3(REF)
LDW 280-28336-3 ASSY(REF)
LDW280M10097-1 (REF)
(FREON
TO SLA-LUT
UMBILICAL INTERFACE
-1170ECC-6(REF)
-1178ECC-6(REF)
976OLP-5(REF)
SECTION R-R
HALF SIZE
LDW 280-11101-11 (REF)
-981 ECC 4(REF)
LDW280M10097-1(REF)
SECTION J-J
HALF SCALE
UP
INBD
J
-Z30.4 (REF)
-981 ECC-4(REF)
976OLP-5(REF)
-1109ECW-4(REF)
-1273ECC-6(REF)
-Z27.00
-1175ECC-6(REF)
-1170ECC-6(REF)
+X228.000(REF)
-1178ECC-6(REF)
UP
AFT
LSC330-507 (3)(REF)
SECTION F-F
HALF SIZE
+Y64.120
(FREON)
TO SLA-LUT
UMBILICAL INTERFACE
+X209.492
H
+X 202.000 (REF)
GLYCOL
RETURN FROM D/S
-1170 ECC-6(REF)
GLYCOL
PRESS TO D/S
-1178 ECC-6(REF)
GOX
976 OLP-5(REF)
+Y65.000 (REF)

MANUFACTURING OPERATIONS
UNLESS OTHERWISE SPECIFIED
NOTES CHECKED ✓ APPLY TO THIS DWG.

PART NUMBER AND ALL OTHER MARKINGS IN REGION MARKED ▭ USE BOTH SIDES IF NECESSARY.

FILLET AND INSIDE CORNER RADII TOLERANCES
.016R TO .062R ± .010
.063R TO .250R ± .015
OVER .250R ± .030

DEPTH SHOWN FOR TAPPED HOLES IS FULL THDS 2-3 IMP THDS. BEYOND PERMISSIBLE.

EXTERNAL THREAD LENGTH SHOWN INCLUDES 2 IMPERFECT THREADS MAX.

DO NOT CADMIUM PLATE & PAINT HOLES OR SURFACES MARKED WITH DOUBLE ASTERISK.

MISMATCH STEP OF ± .005 PERMISSIBLE DUE TO CHANGE OF CUTTERS AT INSIDE INTERSECTING SURFACES.

DIAMETERS MARKED MUST BE CONCENTRIC WITHIN FULL INDICATOR READING

HOLES MUST BE KEPT FREE OF CHROME PLATING SOLUTION.

ALL DIMENSIONS SHOWN TO BE MET AFTER CADMIUM PLATING. THICKNESS OF PLATE .0003 MIN. TO .0005 MAX. MIN. THICKNESS TO BE .0002 ON THREADED AREAS. NO ALLOWANCE FOR PLATING IN HOLES

125 √ SURFACE ROUGHNESS INCLUDING REAMED HOLES PER MIL-STD-10

200 √ FOR ALL DRILLED HOLES

REMOVE ALL BURRS. BREAK ALL EDGES .015-.031

INSPECTION INFORMATION MINIMUM PERMISSIBLE AVERAGE EDGE DISTANCE MARKED IS

SYMBOL ƒ DENOTES SURFACE TO BE MACHINED

UNLESS OTHERWISE SPECIFIED TOLERANCE ON FLANGES IS ± 1/32

LENGTHS OF AN, NAS & MS AL ALY RIVETS SHORTER THAN 1 INCH ARE NOT SPECIFIED.

TOLERANCE ON LOFTED DELINEATIONS IS

DWG SIZE 34 X

02702

NAS 9-1100

LDW280-52355 B

GRUMMAN AIRCRAFT ENGRG CORP., BETHPAGE, L. I., NEW YORK

SIZE	CODE IDENT NO.		
J	26512	LDW280-52355	B

LEM-2(32)
MODEL OR ENG ITEM
SCALE HALF
SHEET 8.00

THIS IS AN ORIGINAL DRAWING

LDW280-52355 C

MODEL OR END ITEM	NEXT ASSY	MODULE OR SER NO.	REQD PER MODULE OR END ITEM
PART NO.		GAEC SCH NO.	

MODEL OR END ITEM	NEXT ASSY	MODULE OR SER NO.	REQD PER MODULE OR END ITEM
PART NO.		GAEC SCH NO.	

MODEL OR END ITEM	NEXT ASSY	MODULE OR SER NO.	REQD PER MODULE OR END ITEM
LEM	LDW280-52001	LEM-2 (32)	1 EACH
PART NO. LDW280-52355-1 & -3		GAEC SCH NO. 30	

TO BE REDRAWN ON PRODUCTION FORMAT

SH REV STATUS: FOR DESCRIPTION OF REV SEE SUBQ SH

SHEET	1.00	1.10	1.11		2.00	2.01	2.02	2.03	3.00
REV	C	A	C		B	B	B	C	C
SHEET	4.00		5.00		6.00		7.00		8.00
REV	B		B		C		B		B
SHEET									
REV									

LAST SECT LTR USED	R-R	GRUMMAN REL INFO C	
LAST DASH NO. USED	-3	PRIM NO.	JK (001)
		320	WP-16 C-19/3/7

UNLESS OTHERWISE SPECIFIED DIMENSIONS ARE IN INCHES.
TOLERANCE UNLESS SPECIFIED
FRACTIONS - DECIMALS - ANGLES
~ ~ ~

ORIG DWG AUTH

DETAIL SPEC REQUIREMENT	
CLASS II ENGRG CHANGE	
CLASS I ENGRG CHANGE	

CONTRACT NO. NAS 9-1100 | LINE ITEM 050 | DOCUMENTATION TYPE II (5)

DRAWN BY	F. BREYER 8/29/66	WEIGHTS	[illegible] 9-20
LAYOUT BY	J. DEVIJA		
CHECKED BY			
GP. LDR.	Chg J. Wolf 9/7/66		
VDI	[illegible] 9/9		
STRUCTURES	[illegible] 9/10/66 for	PROJ ENGR	R.M. Carbee 9-13
STRUCTURES	R. HILDEBRAHN	REL GROUP	Botts 9-22-66

GRUMMAN AIRCRAFT ENGRG CORP
BETHPAGE, L. I., NEW YORK

LINES INSTALLATION
ENVIRONMENTAL CONTROL SUB-SYSTEM-AFT EQUIPMENT BAY

SIZE	CODE IDENT NO.		
B	26512	LDW280-52355	C
SCALE NONE		SHEET 1.00 OF 13	

ENG 77.1 12-65

C.D.R 10 SEPT 1966

01 NAS 9-1100

REVISIONS

CHANGE LTR	ITEM NO.	SHEET NO.	ZONE	GRUMMAN INFO ONLY	DET SPEC	CLASS I	CLASS II	ENGRG ORDER	DESCRIPTION	EFFECTIVITY	DISPOSITION OF EXISTING PARTS		CHANGED BY AND DATE	ENGRG APPD	APPD
											REWORK	SCRAP			
B	1	4.00 2.03	3B				✓	EO B1	ON-1 INSTL DELETED GB511J-08-1, AN960D8L(2), MS21042L08; ADDED OPEN HOLE IN GC500J-D6T TO .250(1/4), AN525-416-18, NAS43DD4-40, AN960D416L.	LM-2	✓		J. DE VITA 9-29-67		
	2	5.00 2.00 2.03	9B					EO B2 LCD 838	ON-1 INSTL DELETED -962 ECW-4; ADDED -1734 ECW-4, -1735 ECW-4, LDW280-16070-1, LSC330-425-3-1, LSC269-118-4(2), AN960D8L(4), MS21042L08(2)						
	3	4.00 2.00 2.01 2.02 2.03	3B					EO B3 LCD 838	ON-1 INSTL DELETED -948 ECW-4, -1100 ECW-4, -1640 ECW-4, LSC269-117-4, LSC269-118-4(2), LSC269-131-4, LSC269-161-4; ADDED -1724 ECW-4, -1725 ECW-4, LDW280-16070-1, LSC330-425-1-1, GB511J-08-1(2), AN960D8L(2)						
	4	5.00 2.00 2.03	9B					EO B4 LCD 1109	ON-1 INSTL DELETED -955 ECC-6, -956 ECC-6; ADDED -1806 ECC-6, -1807 ECC-6, GC500J-D6T(2), GB511J-08-1(2), AN960D8L(4), MS21042L08(2)		NOT	REQD			
	5	8.00 2.03 3.00	33A					EO B5 LCD 1078	ON-1 & -3 INSTL IN SECTION H-H ADDED MS20995NC32 LOCKWIRE AS REQD FOR LSC269-119 NUTS & NOTE #6		✓				
	6	5.00 4.00 2.03 3.00	9B 3B					EO B6 LCD 838	ON-1 INSTL ADDED GT15A-1 AS REQD TO -1735 ECW-4 & -1724 ECW-4 & NOTE #7						
	7	4.00 7.00 2.00 2.01 2.02 2.03	3B 25A			✓		EO B7 LCD 1714	ON-1 INSTL DELETED -944 ECC-6, -1177 ECC-6, -1725 ECW-4; ADDED -2000 ECW-4, -2009 ECC-6, -2010 ECC-6, -2014 ECC-6, LSC269-118-6(1)						
	8	4.00 2.00 2.02 2.03	3B 3C					EO B8 LCD 1594	ON-1 INSTL DELETED -942 ECC-4, -1657 ECC-6, GC500J-D6T, AN525-416-18, NAS43DD4-40, AN960D416L; ADDED -1836 ECC-4, -1837 ECC-4, -1838 ECC-4, -1839 ECC-4, LDW280-16070-1, GB511J-08-1(6), AN960D8L(10), LSC330-425-1-1, LSC269-131-4, LSC269-118-4(5), LSC330-224(REF), GC500J-D4T(4), MS21042L08(4)						
	9	4.00 2.00	3C					EO B9 LCD 1714	-ON-1 INSTL DELETED -1275 ECC-6; ADDED -2067 ECC-6						
	10	4.00 2.03	3B					EO B10 LCD 1714	ON-1 INSTL DELETED LSC330-425-1-1(1), ADDED LSC330-425-1-3(1)						
C	1	3.00						LEO280-708 LCD 1964	ADDED NOTE #8		NOT	REQD			
	2	6.00 2.03	17C				✓	EO C2	ON-1 INSTL ADDED GC500J-D6T(2), GB511J-08-1(1), GB511J-08-5(1), AN960D8L(3), MS21042L08(1), NAS43DD3-16(1)		✓				
	3	1.00						BoC Ⓡ	ON SH 1.00 ADDED SH 1.11; SH 1 OF 13 WAS SH 1 OF 12		NOT	REQD			

FOR CONTINUATION OF REVISIONS SEE SHEET ________

GRUMMAN AIRCRAFT ENGRG CORP, BETHPAGE, L. I., NEW YORK

SIZE	CODE IDENT NO.		
B	26512	LDW280-52355	C
SCALE NONE			SHEET 1.11

Ⓒ

ENG 77.3 5-66

01

NAS 9-1100

QTY PER ASSEMBLY							CODE IDENT	PART NO.	I&T	NOMENCLATURE OR DESCRIPTION	MATERIAL	GOVT SPEC	COML SPEC	STOCK SIZE	PROCESS SYM	FINISH NO.	ZONE
N						1		LSC 330-425-3-1	E	FLOW LIMITER	SEE NOTE #4						
N						1		LSC 330-425-1-3	E	FLOW LIMITER	SEE NOTE #4						
N						1		LSC330-425-1-1	E	FLOW LIMITER	SEE NOTE #4						
A						38		GC500J-D6T	E	CLAMP	GRUM STD						
A					1			GC500J-D5T		CLAMP	GRUM STD						
A					9	23		GC500J-D4T		CLAMP	GRUM STD						
A						1		GB511J-08-5		BOLT	GRUM STD						
A						4		GB511J-08-25		BOLT	GRUM STD						
						6		-24									
						8		-22									
						6		-15									
						18		-14									
						10		-12									
					6	15		-2									
A					4	42		GB511J-08-1		BOLT	GRUM STD						
A					AS REQD	AS REQD		MS20995NC32		LOCKWIRE	STD PART						
A					4	73		MS21042L08		NUT	STD PART						
A					14	183		AN960D8L		WASHER	STD PART						
A						1		NAS43DD3-16		SPACER	STD PART						
A						AS REQD		GT15A-1		TAPE FLUID LINE - FLOW ARROW	GRUM STD						
N						2		LSC269-135-6		TEE REDUCER	SEE NOTE #4						
						7		131-6		TEE							
					2	3		131-4		TEE							
						2		124-6		UNION							
					1			124-5		UNION							
						2		119-6		NUT							
					1			119-5		NUT							
					2	61		118-6		SEAL							
					4			118-5		SEAL							
N					10	35		LSC 269-118-4	E	SEAL	SEE NOTE #4						
A						3		LDW280-16070-1	E	CLAMP ASSY	SEE DWG						
CL					-3	-1											

SYM OR NO.	PROCESS OR FINISH	GRUMMAN SPEC OR MILITARY SPEC	SYM OR NO.	PROCESS OR FINISH	GRUMMAN SPEC OR MILITARY SPEC	SYM OR NO.	PROCESS OR FINISH	GRUMMAN SPEC OR MILITARY SPEC

I&T: IDENTIFICATION AND TRACEABILITY IN ACCORDANCE WITH : NONE

GRUMMAN AIRCRAFT ENGRG CORP, BETHPAGE, L. I., NEW YORK

SIZE	CODE IDENT NO.		
B	26512	LDW280-52355	C
SCALE NONE			SHEET 2.03

ENG 77.2 7-65

01

NAS 9-1100

NOTES:

1. TUBE NUMBERS ARE DASH NUMBERS OF LDW280-16000
2. TUBE ASSEMBLIES AND FITTINGS SHALL BE CLEANED TO LEVEL "N" OF LSP14-0011 PRIOR TO INSTL AND LEVEL "E" ON FINAL INSTL EXCEPT FOR OXYGEN SYSTEM (-3) WHICH SHALL MAINTAIN LEVEL "N"
3. ALL GAMAH JOINT CONNECTIONS SHALL BE IN ACCORDANCE WITH LSP 14-17402
4. COMMERCIAL PART: SEE SPECIFICATION CONTROL DRAWING BEFORE ORDERING
5. SUBSTITUTION OF NAS1132V*, AN525-832R* OR AN525-832-* BOLTS FOR THE GB511J-08-* BOLT IS PERMISSIBLE.
6. SAFETY WIRE INACCORDANCE WITH MS33540.
7. GT15A-1 TO BE INSTALLED AS PER LSP-14-4704.
8. BONDING TO BE INACCORDANCE WITH LSP-390-001.

GRUMMAN AIRCRAFT ENGRG CORP., BETHPAGE, L. I., NEW YORK			
SIZE B	CODE IDENT NO. 26512	LDW280-52355	C. (C)
SCALE ~		SHEET 3.00	

ENG 73.1 6-64

01

NAS 9-1100

01/02 NAS 9-1100

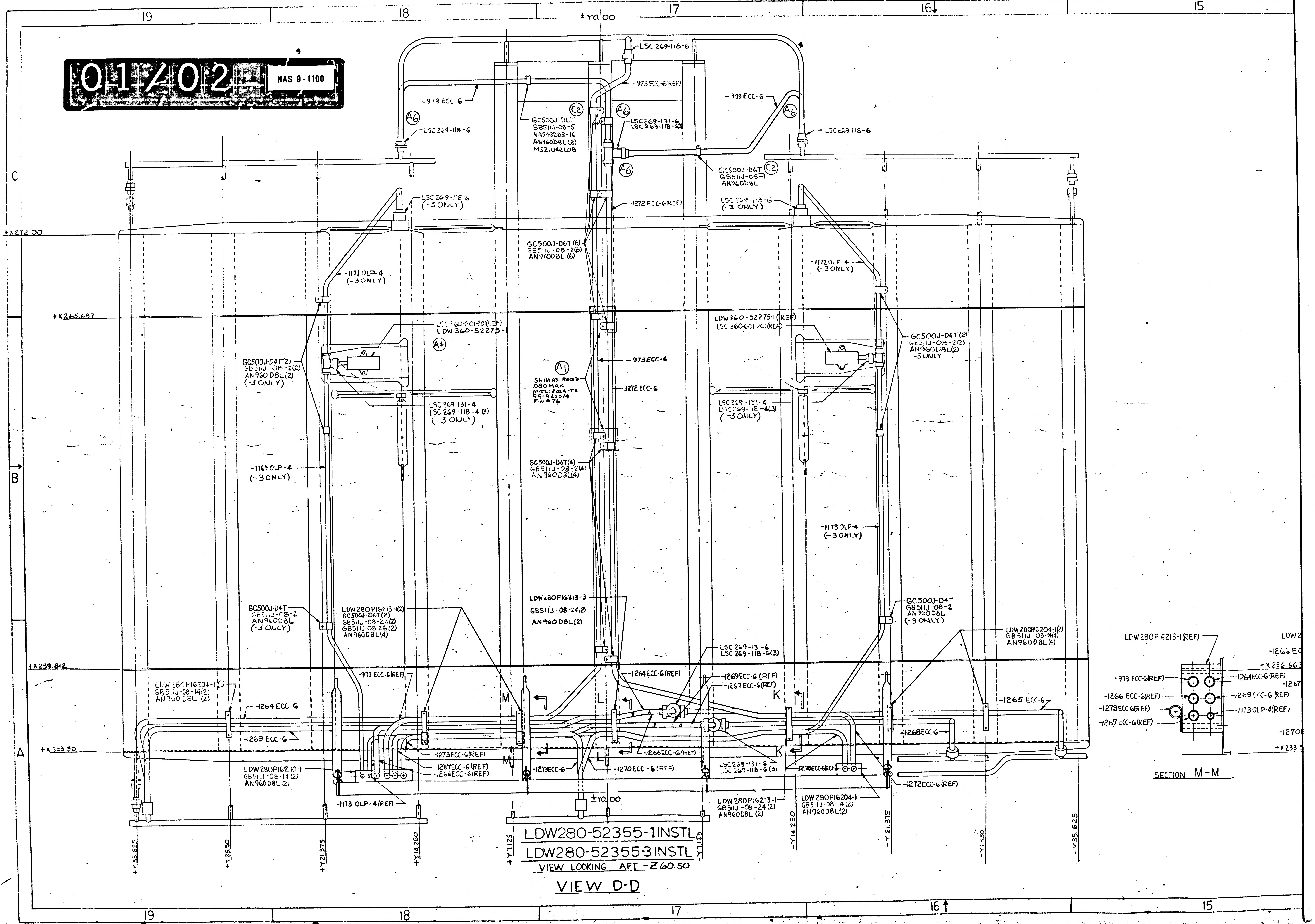
19
18
17
16
15
±Y0.00
C
B
A
-973 ECC-6
-973 ECC-6 (REF)
LSC 269-118-6
A6
C2
GC500J-D6T
GB511J-08-5
NAS43DD3-16
AN960D8L (2)
MS21042L08
LSC269-131-6
LSC269-118-6(3)
GC500J-D6T
GB511J-08-7
AN960D8L
LSC 269-118-6
(-3 ONLY)
-1272 ECC-6 (REF)
+X272.00
GC500J-D6T (6)
GB511J-08-2(6)
AN960D8L (6)
-1171 OLP-4
(-3 ONLY)
-1172 OLP-4
(-3 ONLY)
+X265.687
LSC 360-601-20(REF)
LDW 360-52275-1
LDW360-52275-1(REF)
LSC 360-601 20(REF)
A4
GC500J-D4T(2)
GB511J-08-2(2)
AN960D8L(2)
(-3 ONLY)
A1
SHIMS AS REQD
.080 MAX
MATL: 2024-T3
QQ-A-250/4
F.N #76
-973 ECC-6
-1272 ECC-6
LSC 269-131-4
LSC 269-118-4 (3)
(-3 ONLY)
GC500J-D6T(4)
GB511J-08-2(4)
AN960D8L(4)
-1169 OLP-4
(-3 ONLY)
-1173 OLP-4
(-3 ONLY)
GC500J-D4T
GB511J-08-2
AN960D8L
(-3 ONLY)
LDW280P16213-1(2)
GC500J-D6T(2)
GB511J-08-24(2)
GB511J-08-25(2)
AN960D8L(4)
LDW280P16213-3
GB511J-08-24(2)
AN960 D8L(2)
LSC 269-131-6
LSC 269-118-6(3)
LDW280P16204-1(2)
GB511J-08-14(4)
AN960D8L(4)
+X239.812
LDW280P16204-1(2)
GB511J-08-14(2)
AN960D8L (2)
-1264 ECC-6
-1269 ECC-6
-973 ECC-6(REF)
M
L
K
-1264 ECC-6(REF)
-1269 ECC-6 (REF)
-1267 ECC-6(REF)
-1265 ECC-6
-1268 ECC-6
+X233.50
-1273 ECC-6(REF)
-1267 ECC-6 (REF)
-1266 ECC-6 (REF)
-1273 ECC-6
-1270 ECC-6 (REF)
-1266 ECC-6(REF)
LSC 269-131-6
LSC 269-118-6(3)
-1270 ECC-6(REF)
-1272 ECC-6(REF)
LDW280P16210-1
GB511J-08-14(2)
AN960D8L (2)
-1173 OLP-4 (REF)
±Y0.00
LDW280P16213-1
GB511J-08-24(2)
AN960D8L (2)
LDW280P16204-1
GB511J-08-14(2)
AN960D8L(2)
+Y35.625
+Y28.50
+Y21.375
+Y14.250
+Y7.125
-Y7.125
-Y14.250
-Y21.375
-Y28.50
-Y35.625
LDW280P16213-1(REF)
-973 ECC-6(REF)
-1266 ECC-6(REF)
-1273 ECC-6(REF)
-1267 ECC-6(REF)
-1264 ECC-6(REF)
-1269 ECC-6 (REF)
-1173 OLP-4(REF)
+X236.663
+X233.5
-1270
SECTION M-M

LDW280-52355-1 INSTL
LDW280-52355-3 INSTL
VIEW LOOKING AFT -Z60.50

VIEW D-D

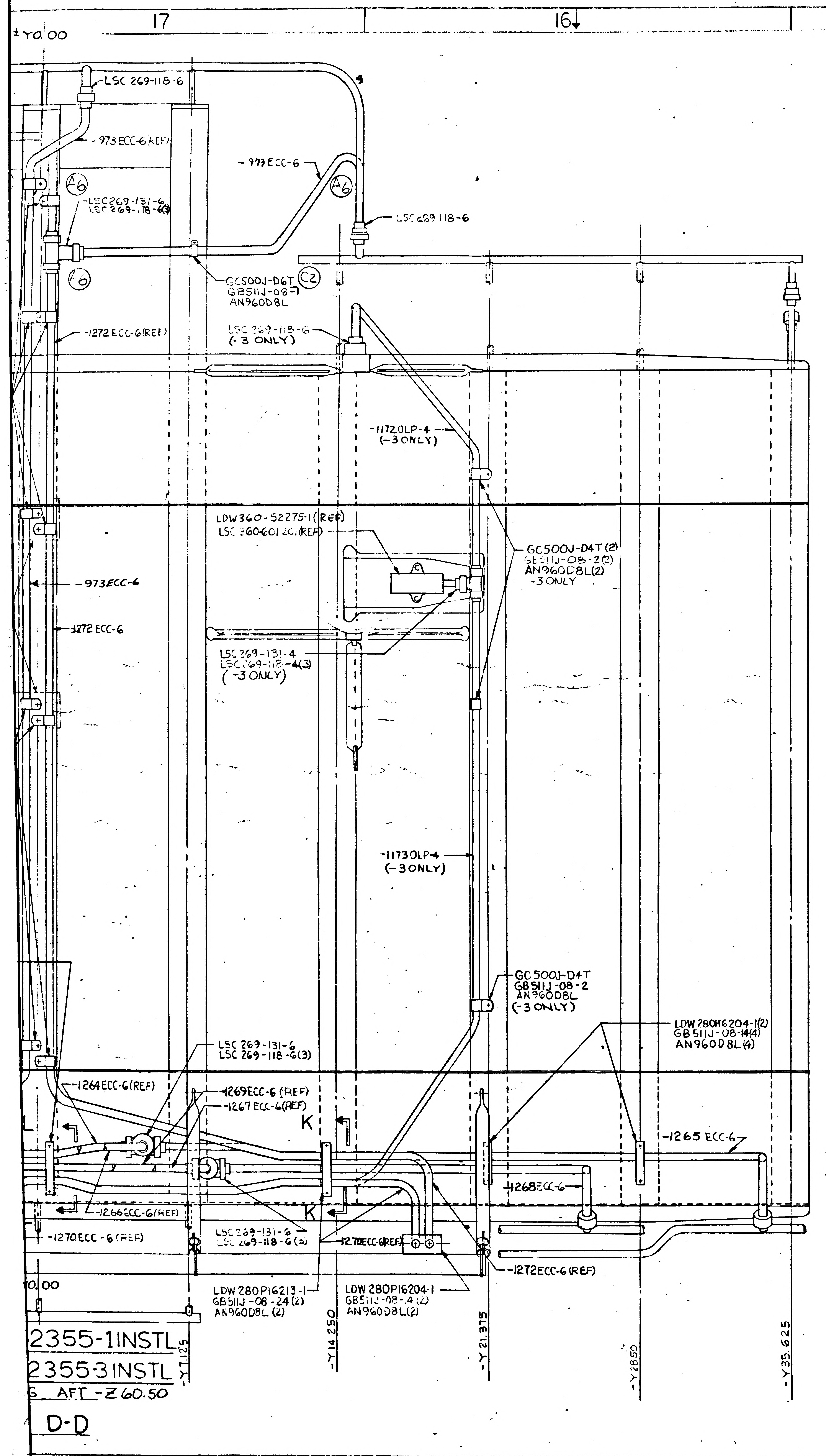
17
16
15
14
±Y0.00
LSC 269-118-6
-973 ECC-6 (REF)
-973 ECC-6
A6
LSC 269-131-6
LSC 269-118-6(3)
LSC 269-118-6
C6
GC500J-D6T
GB511J-08
AN960D8L
C2
-1272 ECC-6(REF)
LSC 269-118-6
(-3 ONLY)
-11720LP-4
(-3 ONLY)
LDW360-52275-1(REF)
LSC 260-601 2(REF)
GC500J-D4T(2)
GB511J-08-2(2)
AN960D8L(2)
-3 ONLY
-973ECC-6
-1272 ECC-6
LSC 269-131-4
LSC 269-118-4(3)
(-3 ONLY)
-11730LP-4
(-3 ONLY)
GC500J-D4T
GB511J-08-2
AN960D8L
(-3 ONLY)
LDW 280H6204-1(2)
GB511J-08-14(4)
AN960D8L(4)
LSC 269-131-6
LSC 269-118-6(3)
-1264ECC-6(REF)
-1269ECC-6 (REF)
-1267 ECC-6(REF)
K
L
-1265 ECC-6
-1268ECC-6
-1266ECC-6(REF)
K
-1270ECC-6 (REF)
LSC 269-131-6
LSC 269-118-6(3)
-1270ECC-6(REF)
-1272ECC-6 (REF)
Y0.00
LDW 280P16213-1
GB511J-08-24(2)
AN960D8L (2)
LDW 280P16204-1
GB511J-08-14(2)
AN960D8L(2)
2355-1INSTL
2355-3INSTL
G AFT -Z 60.50
D-D
-Y7.125
-Y14.250
-Y21.375
-Y28.50
-Y35.625
17
16

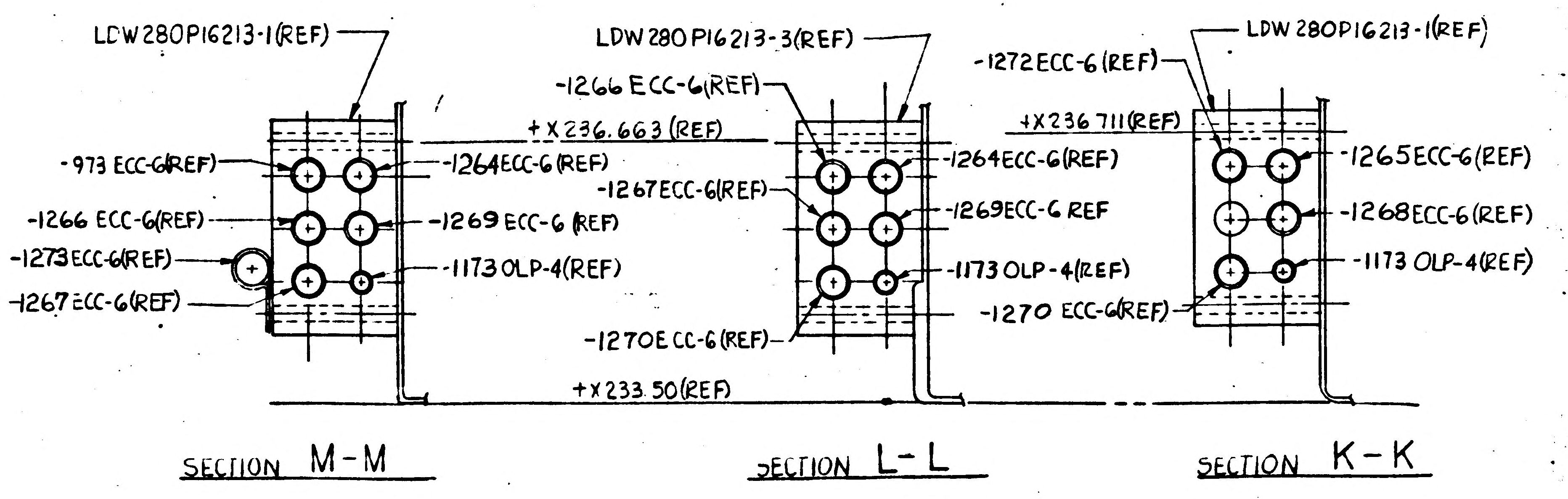
LDW280P16213-1(REF)
-973 ECC-6(REF)
-1264ECC-6 (REF)
-1266 ECC-6(REF)
-1269 ECC-6 (REF)
-1273ECC-6(REF)
-11730LP-4(REF)
-1267 ECC-6(REF)
LDW 280P16213-3(REF)
-1266 ECC-6(REF)
+X236.663 (REF)
-1267ECC-6(REF)
-1264ECC-6(REF)
-1269ECC-6 REF
-1173 OLP-4(REF)
-1270ECC-6 (REF)
+X233.50(REF)
LDW 280P16213-1(REF)
-1272ECC-6 (REF)
+X236.711(REF)
-1265ECC-6(REF)
-1268ECC-6(REF)
-1173 OLP-4(REF)
-1270 ECC-6(REF)

SECTION M-M

SECTION L-L

SECTION K-K

13

MANUFACTURING OPERATIONS
UNLESS OTHERWISE SPECIFIED
NOTES CHECKED √ APPLY TO THIS DWG.

PART NUMBER
AND ALL OTHER MARKINGS
IN REGION MARKED ▭
USE BOTH SIDES IF NECESSARY.

FILLET AND INSIDE CORNER
RADII TOLERANCES
.016R TO .062R ± .010
.063R TO .250R ± .015
OVER .250R ± .030

DEPTH SHOWN FOR TAPPED
HOLES IS FULL THDS. 2-3 IMP THDS.
BEYOND PERMISSIBLE.

EXTERNAL THREAD LENGTH
SHOWN INCLUDES
2 IMPERFECT THREADS MAX.

DO NOT CADMIUM PLATE & PAINT
HOLES OR SURFACES MARKED
WITH DOUBLE ASTERISK.

MISMATCH STEP OF ± .005
PERMISSIBLE DUE TO CHANGE
OF CUTTERS AT INSIDE
INTERSECTING SURFACES.

DIAMETERS MARKED
MUST BE CONCENTRIC WITHIN
FULL INDICATOR
READING

HOLES MUST BE KEPT FREE OF
CHROME PLATING SOLUTION.

ALL DIMENSIONS SHOWN TO BE MET
AFTER CADMIUM PLATING.
THICKNESS OF PLATE .0003 MIN
TO .0005 MAX. MIN. THICKNESS TO
BE .0002 ON THREADED AREAS.
NO ALLOWANCE FOR PLATING IN
HOLES

125 SURFACE ROUGHNESS
INCLUDING REAMED HOLES
PER MIL-STD-10

200 FOR ALL DRILLED HOLES

REMOVE ALL BURRS.
BREAK ALL EDGES .015-.031

INSPECTION INFORMATION
MINIMUM PERMISSIBLE
AVERAGE EDGE DISTANCE
MARKED IS

SYMBOL √ DENOTES SURFACE
TO BE MACHINED

UNLESS OTHERWISE SPECIFIED
TOLERANCE ON FLANGES IS ± 1/32

LENGTHS OF AN, NAS & MS ALLOY
RIVETS SHORTER THAN 1 INCH ARE
NOT SPECIFIED.

TOLERANCE ON LOFTED
DELINEATIONS IS

DWG SIZE 34 X

PRINTING INFO ONLY
FULL SIZE SHEET AREA (36 X) = SQ. FT.
1/2 SIZE SHEET AREA (1/4 OF FULL) = SQ. FT.

PRINT TRIM LINE

C

B

A

LDW280-52355 C

LDW280-52355 C

02/02

NAS 9-1100

GRUMMAN AIRCRAFT ENGRG CORP., BETHPAGE, L. I., NEW YORK

SIZE	CODE IDENT NO.		
J	26512	LDW280-52355	C

LEM-2(32)
MODEL OR END ITEM
SCALE HALF
SHEET 6.00

13

THIS IS AN ORIGINAL DRAWING.

ENG 32.1 REV 3-65 LIAISON ENGINEERING #5

GRUMMAN AIRCRAFT ENGINEERING CORP.
CODE IDENT NO. 26512
ENGINEERING ORDER

DWG NO. LDW280-52355
EO NO. A1
CONTROL INFO NO. LM-5-9172

IN FLD (ON-1) SHT 6.00 (ZONE 17B)

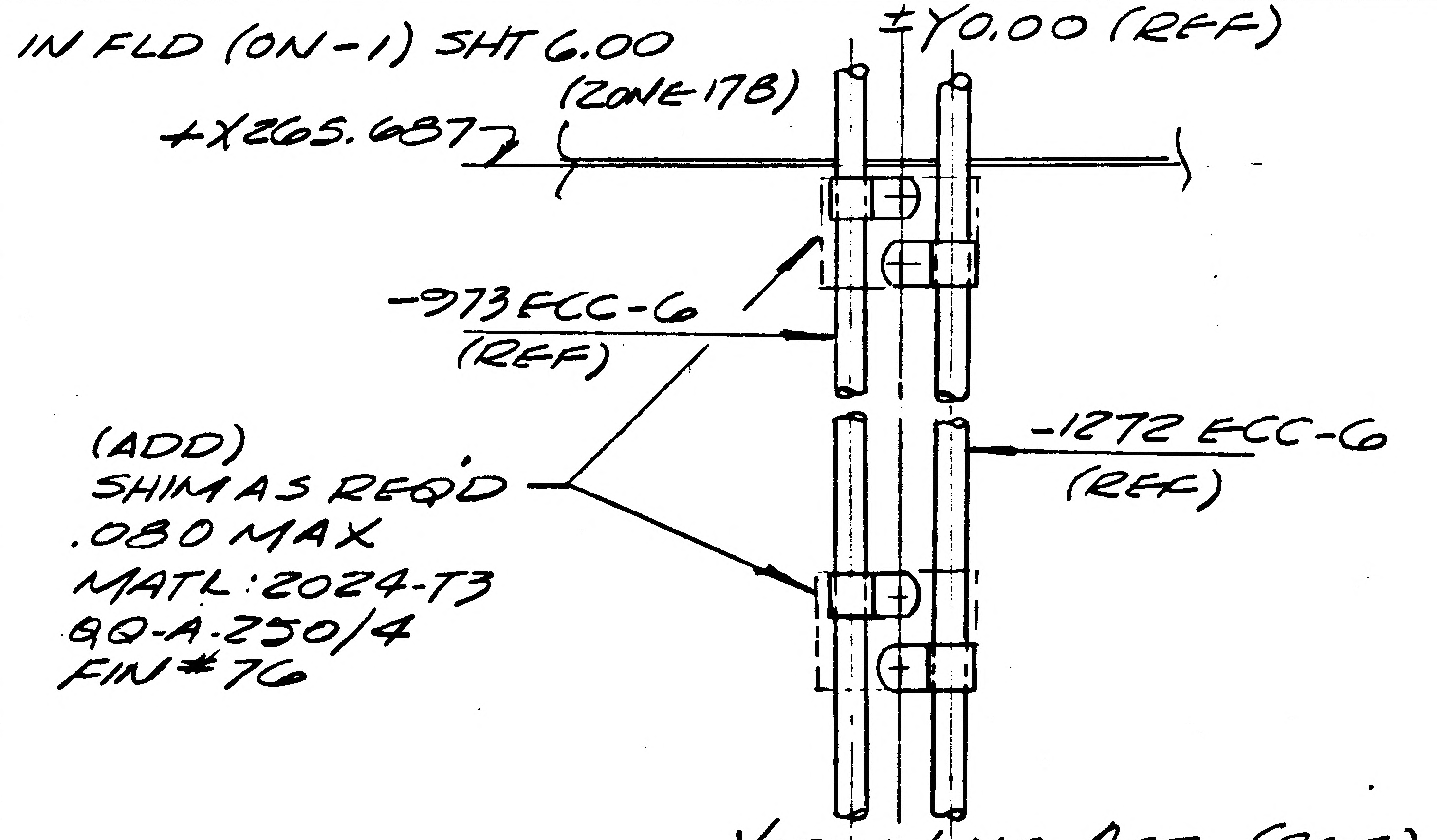
±Y0.00 (REF)
+X265.687
-973ECC-6 (REF)
(ADD) SHIM AS REQ'D .080 MAX MATL: 2024-T3 QQ-A-250/4 FIN #76
-1272 ECC-6 (REF)

VIEW LKG AFT (REF)

DETAIL SPEC REQ		CL II ENGRG CHG		CL I ENGRG CHG		

REASON FOR EO	DESCRIPTION OF EO	GAEC & EO RELEASE
TO MAKE ALLOWANCE FOR VARIATION BETWEEN LINES & STRUCTUAL.	IN FLD (ON-1) ADDED SHIM AS REQD .080 MAX..ETC (2PLCS)	S LE

MODEL	EFFECTIVITY		
	PROCURING ACTIVITY NO.	GAEC UNIT NO.	SUB CONTR UNIT NO.
LM		LMZ(32)	

DRAWING CHANGE REQD		DISPOSITION OF PARTS		APPROVED BY	JW	—	—	—	JFJ	CH	PM	
✓		✓		DATE	11/21/66				10-4-66	9-29-66	10-5-66	10-4-66
REVISE DWG	RECORD EO	REWORK	SCRAP	9/28/66	VD1	SUPPORT	RELIAB. GROUP	GROUP LEADER	STRESS GROUP	LIAISON ENGRG	PROJ ENGRG	~~GOVT~~

PRIORITY	DRAWING TITLE	DRAWING NO.	EO NO.
C	LINES INSTL, ENVIR CONTROL SUB SYSTEM - AFT EQUIP BAY	LDW280-52355	A1

ISSUED BY LIAISON-M DREYES X6452 SECTION VD1/J. WOLF GROUP NO. 335 PL 35

01

NAS 9-1100

*

GRUMMAN AIRCRAFT ENGINEERING CORP.
CODE IDENT NO. 26512

ENGINEERING ORDER

ENG 32.1 REV 3-65

DWG. NO. LEO 280-
EO NO. 314
CONTROL INFO NO. LDW280-A2087

ON SH 3 OF THE FOLLOWING DWGS

DWG No.	CHG NO	DWG No.	CHG NO	DWG NO	CHG NO
✓ LDW280-52350	A2	✓ LDW280-52354	A4	LDW280-52358	A1
✓ 52351	A2	✓ -52355	A2	-52359	A3
✓ 52352	A1	-52356	A1	LDW 280-52360	A2
✓ LDW 280-52353	A1	LDW280 - 52357	B2		

ADD THE FOLLOWING NOTE

‡ SUBSTITUTION OF NAS1132V*, AN525-832R* OR AN525-832-* BOLTS FOR THE GB511J-08-* BOLT IS PERMISSIBLE

* USE NEXT AVAILABLE NUMBER.

THIS IS A RE-ISSUE
OF LEO 280-314 ~
INCOMPLETE CHANGE NO'S
ON ORIG ISSUE

(5)

DETAIL SPEC REQ ☐ CL II ENGRG CHG ☐ CL I ENGRG CHG ☐

REASON FOR EO: HARDWARE NOT AVAILABLE

DESCRIPTION OF EO: ON SH 3 ADDED NOTE *(‡)

GAEC EO RELEASE: 10/17

MODEL	EFFECTIVITY		
	PROCURING ACTIVITY NO.	GAEC UNIT NO.	SUB CONTR UNIT NO.
LM		LM-2 (32)	

DRAWING CHANGE REQD: REVISE DWG ✓ RECORD EO

DISPOSITION OF PARTS: REWORK NOT SCRAP REQD

APPROVED BY	JW	—	—	—	GW			
✓ DATE	10-11-66				10-17		10-12-66	10/15/66
	VDI	SUPPORT	RELIAB. GROUP	GROUP LEADER	STRESS GROUP	LIAISON ENGRG	PROJ ENGRG	

PRIORITY: C
DRAWING TITLE: LINES INSTALLATIONS
DRAWING NO: LEO-280-
EO NO.: 314

ISSUED BY C.H. COHEN X7033 SECTION EQUIP LINES (VDI) GROUP NO. 332 PL 35

01

NAS 9-1100

ENG 32.2 REV 3-65

B

GRUMMAN AIRCRAFT ENGINEERING CORP.
CODE IDENT NO. 26512
ENGINEERING ORDER

DWG. NO. LDW280-52355
EO NO. B2
CONTROL INFO NO. LDW280A5236

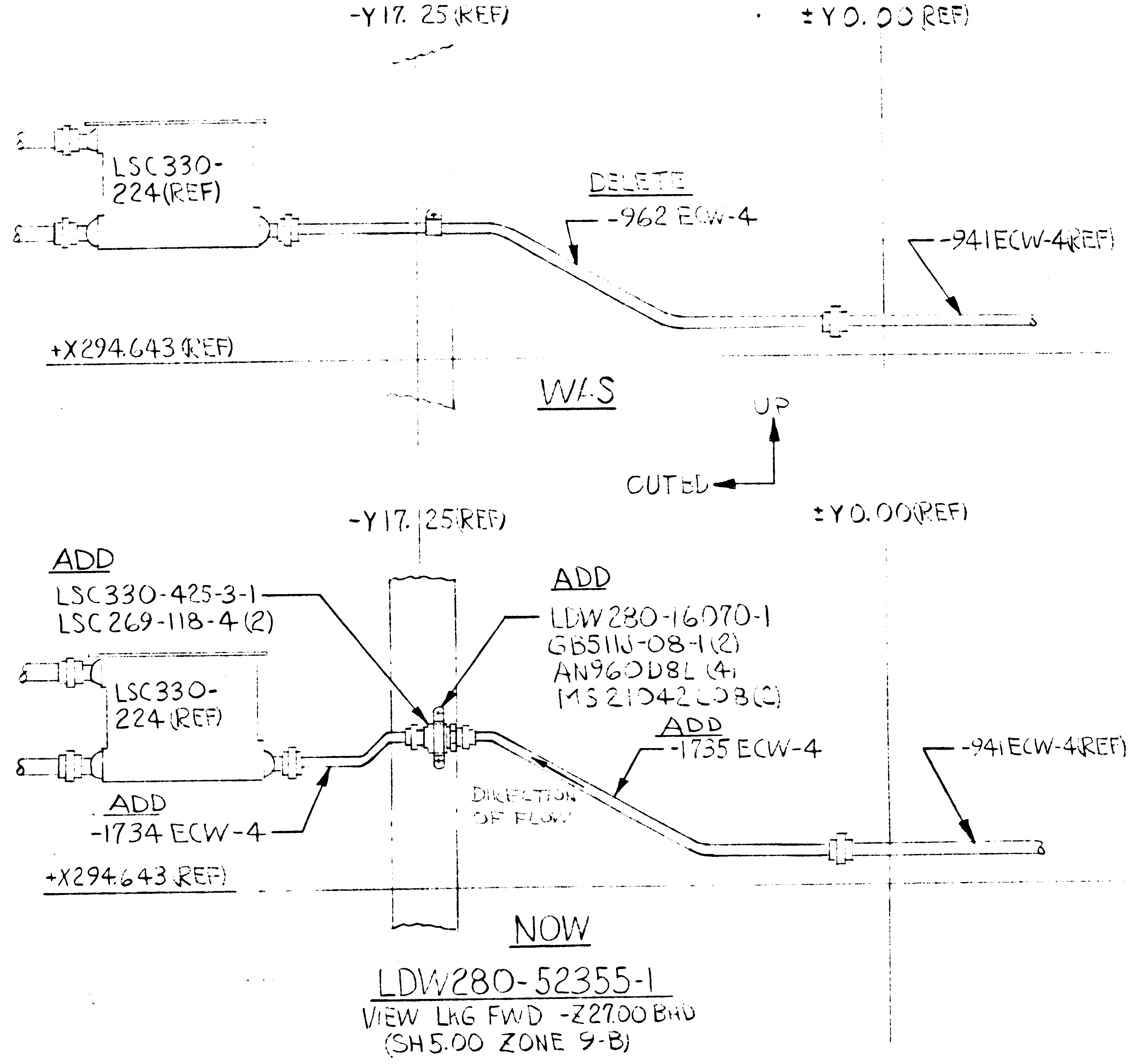

-Y17. 25 (REF)
±Y0.00 REF)
LSC330-224(REF)
DELETE
-962 ECW-4
-941ECW-4(REF)
+X294.643 (REF)
WAS
UP
CUTED
-Y17.25(REF)
±Y0.00(REF)
ADD
LSC330-425-3-1
LSC269-118-4 (2)
ADD
LDW280-16070-1
GB511J-08-1(2)
AN960D8L (4)
MS21042L08(2)
LSC330-224(REF)
ADD
-1735 ECW-4
-941ECW-4(REF)
DIRECTION OF FLOW
ADD
-1734 ECW-4
+X294.643 REF)
NOW
LDW280-52355-1
VIEW LKG FWD -Z27.00 BHD
(SH5.00 ZONE 9-B)

01

NAS 9-1100

NOTE:
TUBE NUMBERS ARE DASH NUMBERS OF LDW280-16000 IN FLD & DESCRIPTION

DETAIL SPEC REQ ☐ CL II ENGRG CHG ☑ CL I ENGRG CHG ☐

LCR # 838

REASON FOR EO: ADDITION OF FLOW LIMITER TO ECS SYSTEM

DESCRIPTION OF EO: ON -1 INSTL DELETED -962 ECW-4; ADDED -1734 ECW-4 -1735 ECW-4, LDW280-16070-1, LSC330-425-3-1, LSC269-118-4(2), GB511J-08-1(2), AN960D8L(4), MS21042L08(2) AND DIRECTION OF FLOW ARROW

(R) GAEC EO RELEASE: 1/24/67

MODEL	PROCURING ACTIVITY NO.	GAEC UNIT NO.	SUB CONTR UNIT NO.
LM		LM-2 (32)	

DRAWING CHANGE REQD: REVISE DWG ✓ RECORD EO
DISPOSITION OF PARTS: REWORK ✓ SCRAP

APPROVED BY					CHC	CW		
DATE	1/24/67				1-24-67	1-24-67		1/24/67 1/24/67
2	VDI	SUPPORT	RELIAB. GROUP	GROUP LEADER	STRESS GROUP	LIAISON ENGRG	PROJ ENGRG	

PRIORITY: C

DRAWING TITLE: LINES INSTL ENVIRONMENTAL CONTROL SUBSYSTEM AFT EQUIP BAY

DRAWING NO. LDW280-52355 EO NO. B2

1-24-67
ISSUED BY J. DE VITA X 1441 SECTION EQUIP LINES (VDI) GROUP NO. 335 PL 35

01 NAS 9-1100

ENG 32.2 REV 3.65

B

GRUMMAN AIRCRAFT ENGINEERING CORP.
CODE IDENT NO. 26512
ENGINEERING ORDER

DWG. NO. LDW280-52355
EO NO. B3
CONTROL INFO NO. LDW280A5140

NOTE:
TUBE NUMBERS ARE DASH NUMBERS OF LDW280-16000 IN FLD & DESCRIPTION

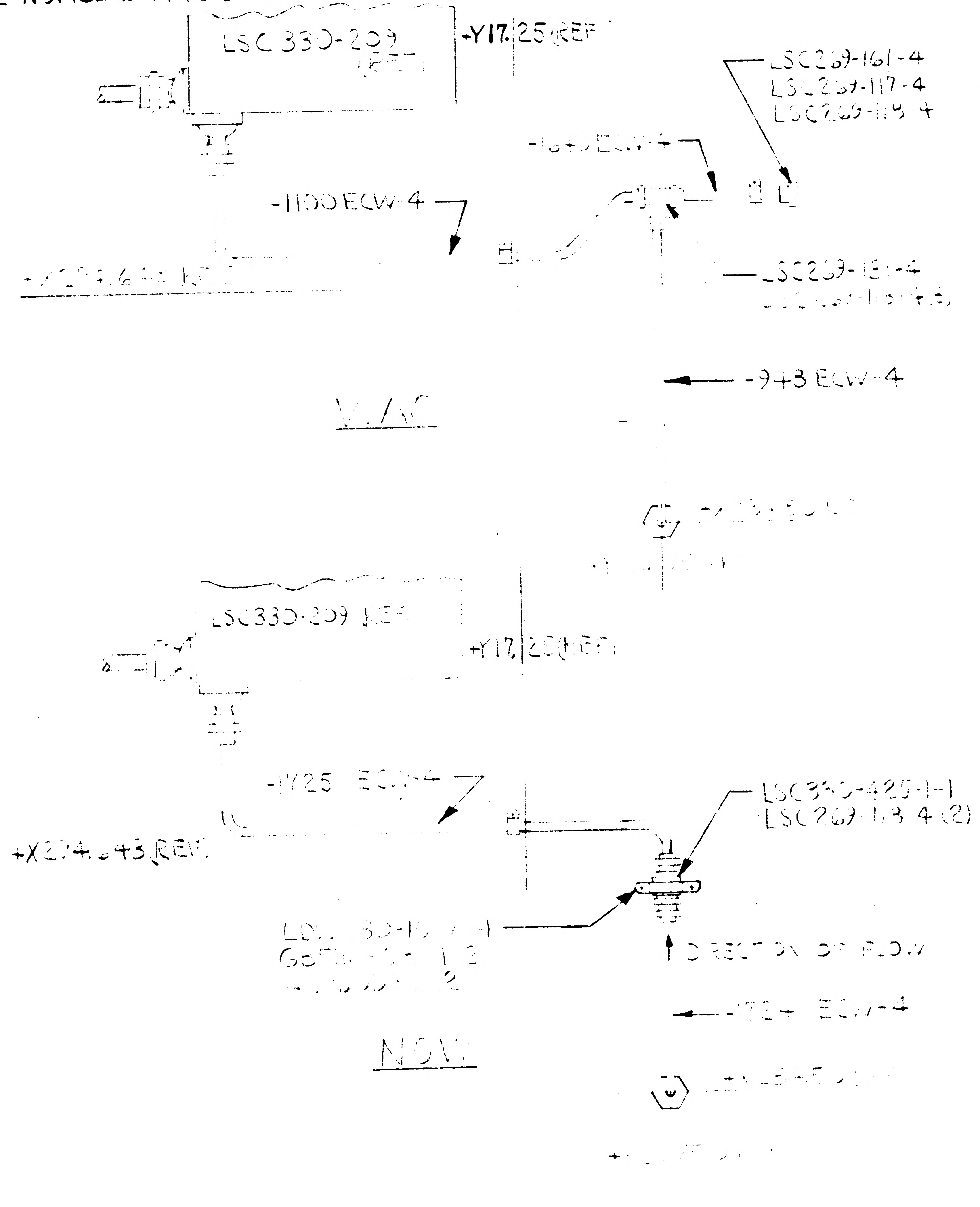
LSC330-209 (REF)
-Y17.25 REF
LSC269-161-4
LSC269-117-4
LSC269-118-4
-1640 ECW-4
-1100 ECW-4
+X274.643 REF
LSC269-131-4
-943 ECW-4
WAS
LSC330-209 REF
+Y17.25 REF
-1725 ECW-4
+X274.643 REF
LSC330-425-1-1
LSC269-118-4 (2)
DIRECTION OF FLOW
-724 ECW-4
NOW

LDW280-52355-INSTL
VIEW LKG FWD -Z27.0 BHD
(CH400 ZONE 3-B)

5

DETAIL SPEC REQ	CL II ENGRG CHG ✓	CL I ENGRG CHG	LCR # 838

REASON FOR EO: ADDITION OF FLOW LIMITER TO ECS SYSTEM

DESCRIPTION OF EO: ON -INSTL DELETED -943 ECW-4, -1100 ECW-4, -1640 ECW-4, LSC269-117-4, LSC269-118-4(2), LSC269-131-4, LSC269-161-4. ADDED -724 ECW-4, -1725 ECW-4, LDW330-… , LSC330-425-1-1, GB3IN 58-12, AD…, & DIRECTION OF FLOW ARROW.

GAEC C EO RELEASE: FR 1/25/67

MODEL	EFFECTIVITY: PROCURING ACTIVITY NO	GAEC UNIT NO	SUB CONTR UNIT NO
LM		LM-2(32)	

DRAWING CHANGE REQD: REVISE DWG ✓ RECORD EO
DISPOSITION OF PARTS: REWORK ✓ SCRAP

		SUPPORT	RELIAB GROUP	GROUP LEADER	STRESS GROUP	LIAISON ENGRG	PROJ ENGRG	GOVT
APPROVED BY		—	—	JW/CHC	B			Botti/HW
DATE	1/20/67			1/20/67	1/23		1/23/67	1-24-67
2	VDI							

PRIORITY: C
DRAWING TITLE: LINES INSTL ENVIRONMENTAL CONTROL SUBSYSTEM AFT EQUIP BAY
DRAWING NO: LDW280-52355
EO NO: B3

1-20-67
ISSUED BY J. D…
SECTION EQUIP LINES VDI
GROUP NO. 382
PL 35

B

ENG 32.2 REV 3-65

GRUMMAN AIRCRAFT ENGINEERING CORP.
CODE IDENT NO. 26512
ENGINEERING ORDER

DWG. NO. LDW280-52355
EO NO. B4
CONTROL INFO NO. LDW280-A5793

NOTE:
TUBE NUMBERS ARE DASH NUMBERS OF LDW280-16000 IN F/D & DESCRIPTION OF EO

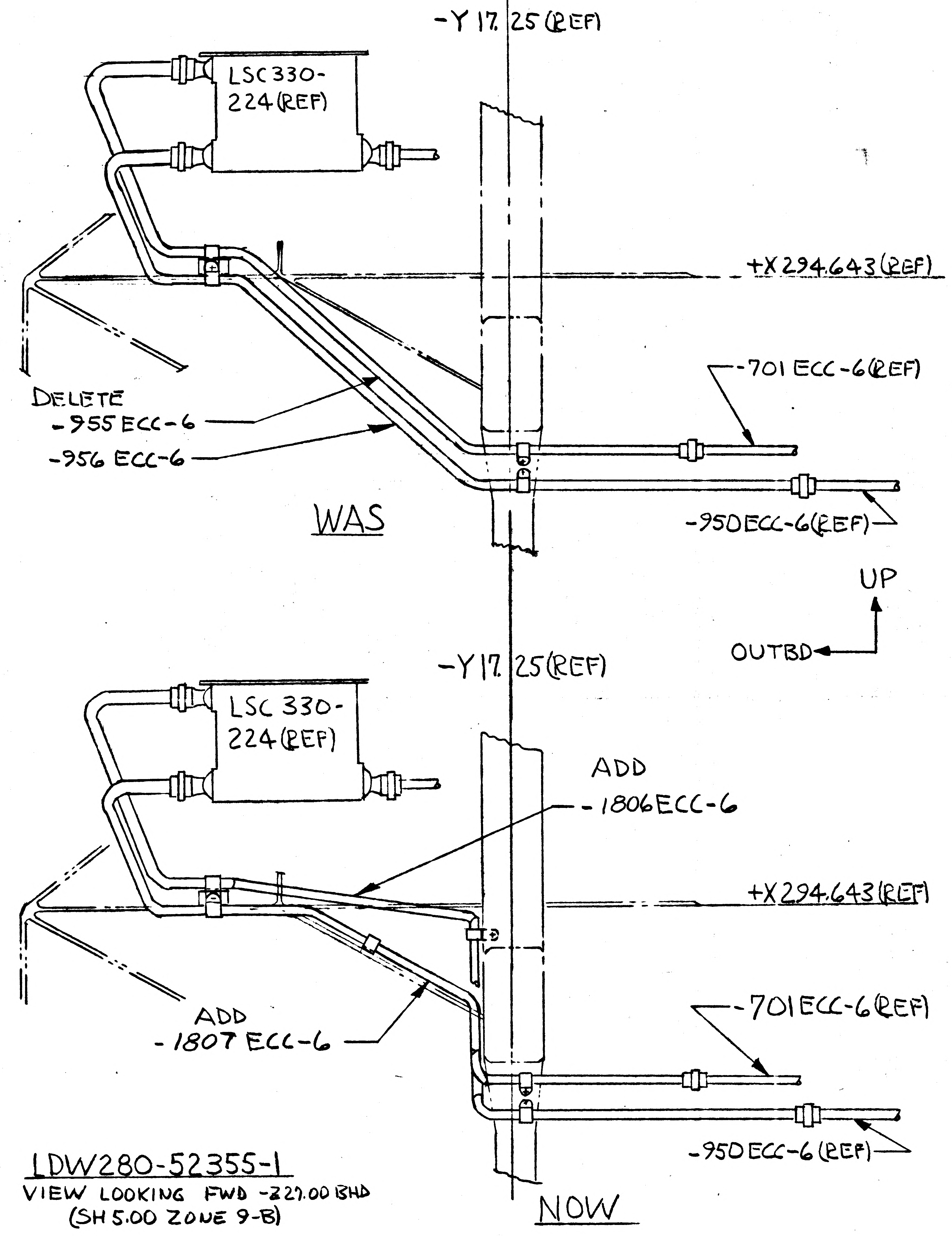

-Y 17.25 (REF)
LSC330-224 (REF)
+X 294.643 (REF)
-701 ECC-6 (REF)
DELETE
-955 ECC-6
-956 ECC-6
WAS
-950 ECC-6 (REF)
UP
OUTBD
-Y 17.25 (REF)
LSC 330-224 (REF)
ADD
-1806 ECC-6
+X 294.643 (REF)
-701 ECC-6 (REF)
ADD
-1807 ECC-6
-950 ECC-6 (REF)
NOW

LDW280-52355-1
VIEW LOOKING FWD -227.00 BHD
(SH 5.00 ZONE 9-B)

ALL CLAMPS TO BE ADDED / LPC 280-21 (REF)

(5)

DETAIL SPEC REQ		CL II ENGRG CHG	✓	CL I ENGRG CHG		LCR19-1109

REASON FOR EO: PIPING REVISION TO IMPROVE ELECTRICAL CONNECTOR ACCESSIBILTY

DESCRIPTION OF EO: ON-1 INSTL DELETED -955 ECC-6, 956 ECC-6; ADDED -1806 ECC-6, -1807 ECC-6 & REVISED PICTURE ACCORDINGLY

GAEC EO RELEASE: C
16 3/18/7

MODEL	PROCURING ACTIVITY NO.	GAEC UNIT NO.	SUB CONTR UNIT NO.
LM		LM-2(32)	

DRAWING CHANGE REQD		DISPOSITION OF PARTS		APPROVED BY								
✓		NOT	REQD	DATE	3/9/67			3/8	2/8		3-1-67	3/18/67
REVISE DWG	RECORD EO	REWORK	SCRAP	/	VDI	SUPPORT	RELIAB. GROUP	GROUP LEADER	STRESS GROUP	LIAISON ENGRG	PROJ ENGRG	~~GOVT~~

PRIORITY: C

DRAWING TITLE: LINES INSTALLATION ENVIRONMENTAL CONTROL SUBSYSTEM AFT EQUIP BAY

DRAWING NO.: LDW280-52355

EO NO.: B4

ISSUED BY J. DE VITA X7033 SECTION EQUIP LINES (VDI) GROUP NO. 332 PL 35

B

ENG 32.1 REV 3-65

GRUMMAN AIRCRAFT ENGINEERING CORP.
CODE IDENT NO. 26512
ENGINEERING ORDER *

DWG. NO. LDW280-52355		EO NO. B5
CONTROL INFO NO. LDW280A 6679		

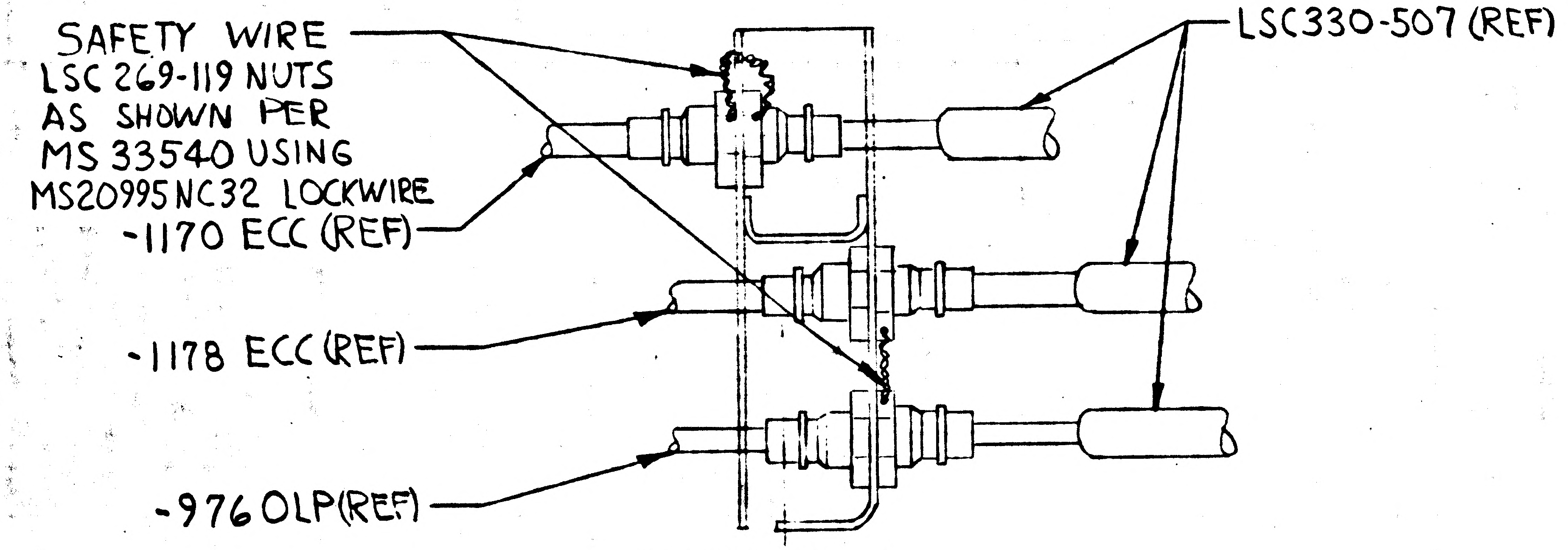

SAFETY WIRE LSC 269-119 NUTS AS SHOWN PER MS 33540 USING MS20995NC32 LOCKWIRE
-1170 ECC (REF)
-1178 ECC (REF)
-976 OLP (REF)
LSC330-507 (REF)

SECT. H-H
(SH8.00 ZONE 33-A)

LDW280-52355-16-3

DETAIL SPEC REQ	☐	CL II ENGRG CHG	☑	CL I ENGRG CHG	☐ LCD [redacted]-1078

REASON FOR EO: TO CALL FOR SAFETY WIRING OF FITTINGS

DESCRIPTION OF EO: ON-16-3 IN SECT H-H ADDED SAFETY WIRE FOR LSC 269-119 NUTS

GAEC EO RELEASE: C JK 5/8/7

MODEL	EFFECTIVITY: PROCURING ACTIVITY NO.	GAEC UNIT NO.	SUB CONTR UNIT NO.
LM		LM-2 (32)	

DRAWING CHANGE REQD: REVISE DWG	RECORD EO	DISPOSITION OF PARTS: REWORK	SCRAP	APPROVED BY								
✓		✓		DATE	5/1/67			5/1/67	5/2/67		5/3/67	5-5-67
				[redacted] 1	VDI	SUPPORT	RELIAB GROUP	GROUP LEADER	STRESS GROUP	LIAISON ENGRG	PROJ ENGRG	GOVT

PRIORITY	DRAWING TITLE	DRAWING NO.	EO NO.
C	INSTALLATION LINES ENVIRONMENTAL CONTROL SUBSYSTEM ASCENT STAGE - AFT EQUIP BAY	LDW280-52355	B5

5-1-67
ISSUED BY J. DeVITA X1153 SECTION EQUIP LINES VDI GROUP NO. 332 PL 25

01

NAS 9-1100

BMG 33.2 REV 3-65

GRUMMAN AIRCRAFT ENGINEERING CORP.
CODE IDENT NO. 26512
ENGINEERING ORDER

DWG. NO. LDW280-52355
EO NO. B6
CONTROL INFO NO. LDW280A7214

THIS PORTION OF EO REVISES EO B2

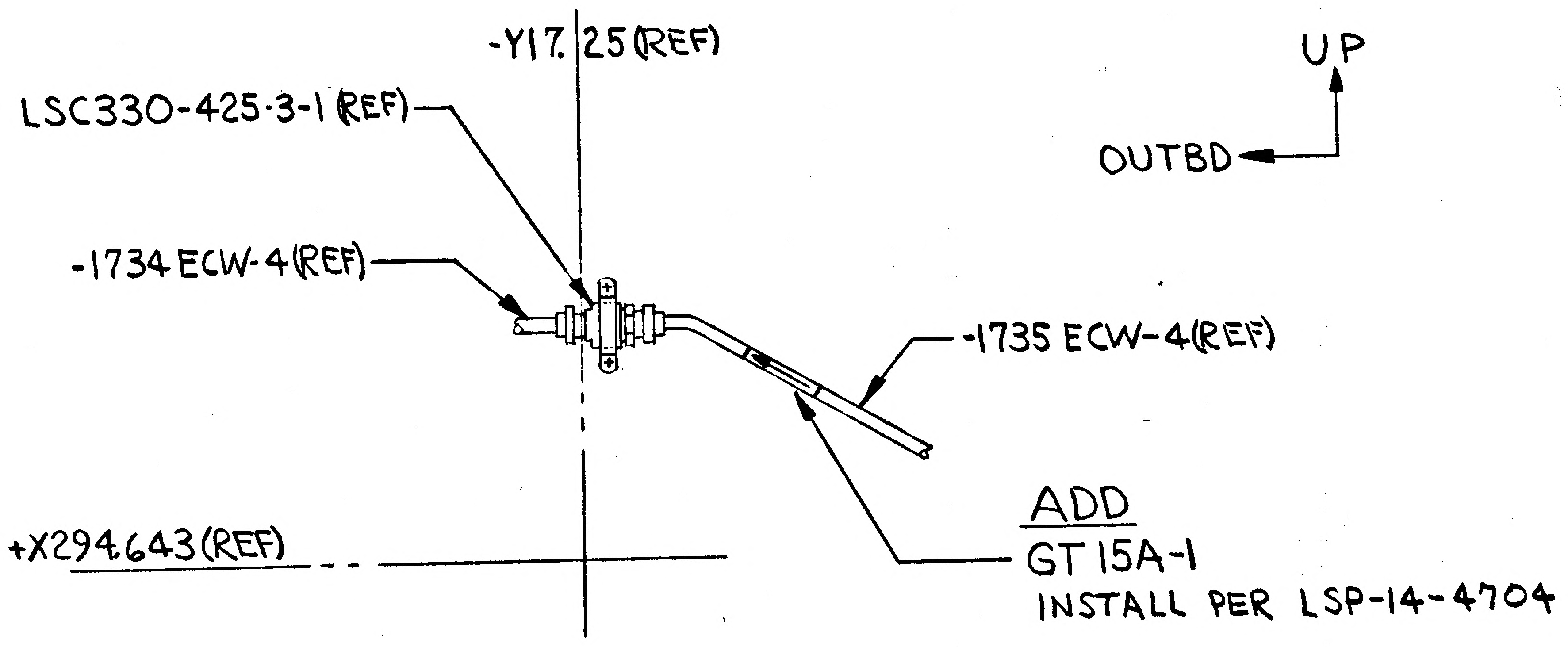

-Y17.25 (REF)
UP
OUTBD
LSC330-425-3-1 (REF)
-1734 ECW-4 (REF)
-1735 ECW-4 (REF)
ADD
GT 15A-1
INSTALL PER LSP-14-4704
+X294.643 (REF)

LDW280-52355-1 INSTL
VIEW LKG FWD -Z27.00 BHD
(SH 5.00 ZONE 9-B)

THIS PORTION OF EO REVISES EO B3

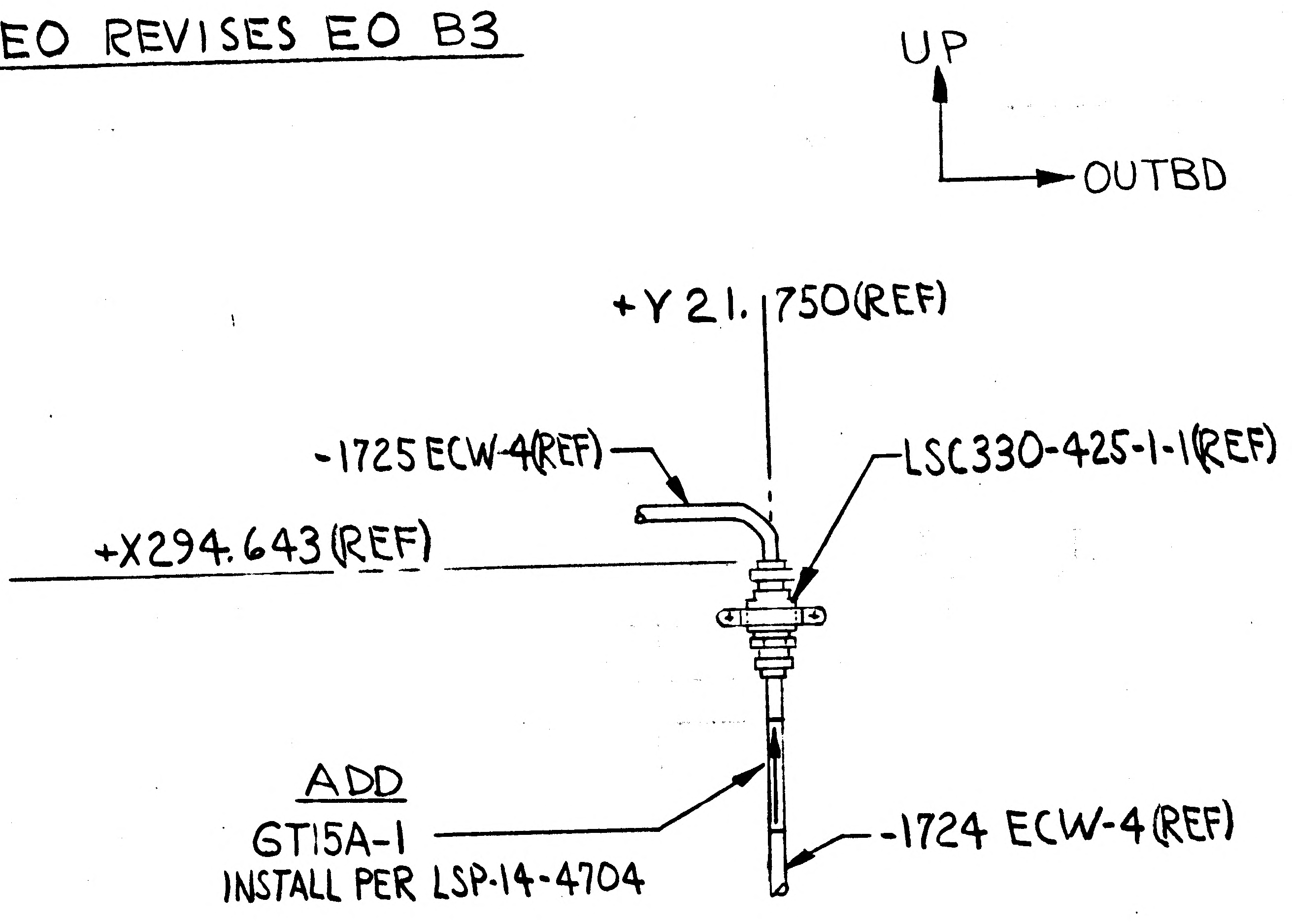

UP
OUTBD
+Y21.750 (REF)
-1725 ECW-4 (REF)
LSC330-425-1-1 (REF)
+X294.643 (REF)
ADD
GT15A-1
INSTALL PER LSP-14-4704
-1724 ECW-4 (REF)

LDW280-52355-1 INSTL
VIEW LKG FWD -Z27.00 BHD
(SH 4.00 ZONE 3-B)

DETAIL SPEC REQ		CL II ENGRG CHG	✓	CL I ENGRG CHG		LCD * 838	5

REASON FOR EO: PART REQD TO INSURE PROPER INSTL OF FLOW LIMITER

DESCRIPTION OF EO: NOTED

GAEC EO RELEASE: C — JK 5-25-67

DRAWING CHANGE REQD: REVISE DWG	RECORD EO	DISPOSITION OF PARTS: REWORK	SCRAP	APPROVED BY / DATE		SUPPORT	RELIAB. GROUP	GROUP LEADER	STRESS GROUP	LIAISON ENGRG	PROJ ENGRG	
✓		✓		1	Jap 5/25/67 VDI			JW 5/25/67	cw 5/25/67		Dam 5/25/67	RJ 5/25/67

MODEL	PROCURING ACTIVITY NO.	GAEC UNIT NO.	SUB CONTR UNIT NO.	PRIORITY	DRAWING TITLE	DRAWING NO.	EO NO.
LM		LM-2 (32)		C	LINES INSTL ENVIRONMENTAL CONTROL SUBSYSTEM AFT EQUIP BAY	LDW280-52355	B6

5-23-67
ISSUED BY J. DeVITA X 1153

SECTION EQUIP LINES (VDI) GROUP NO. 332 PL 25

01 NAS 9-1100

01

NAS 9-1100

ENG 32.2 REV 3-65

GRUMMAN AIRCRAFT ENGINEERING CORP.

CODE IDENT NO. 26512

ENGINEERING ORDER

DWG. NO.	LDW280-52355	EO NO.	B7
CONTROL INFO NO.	LDW280A7707		

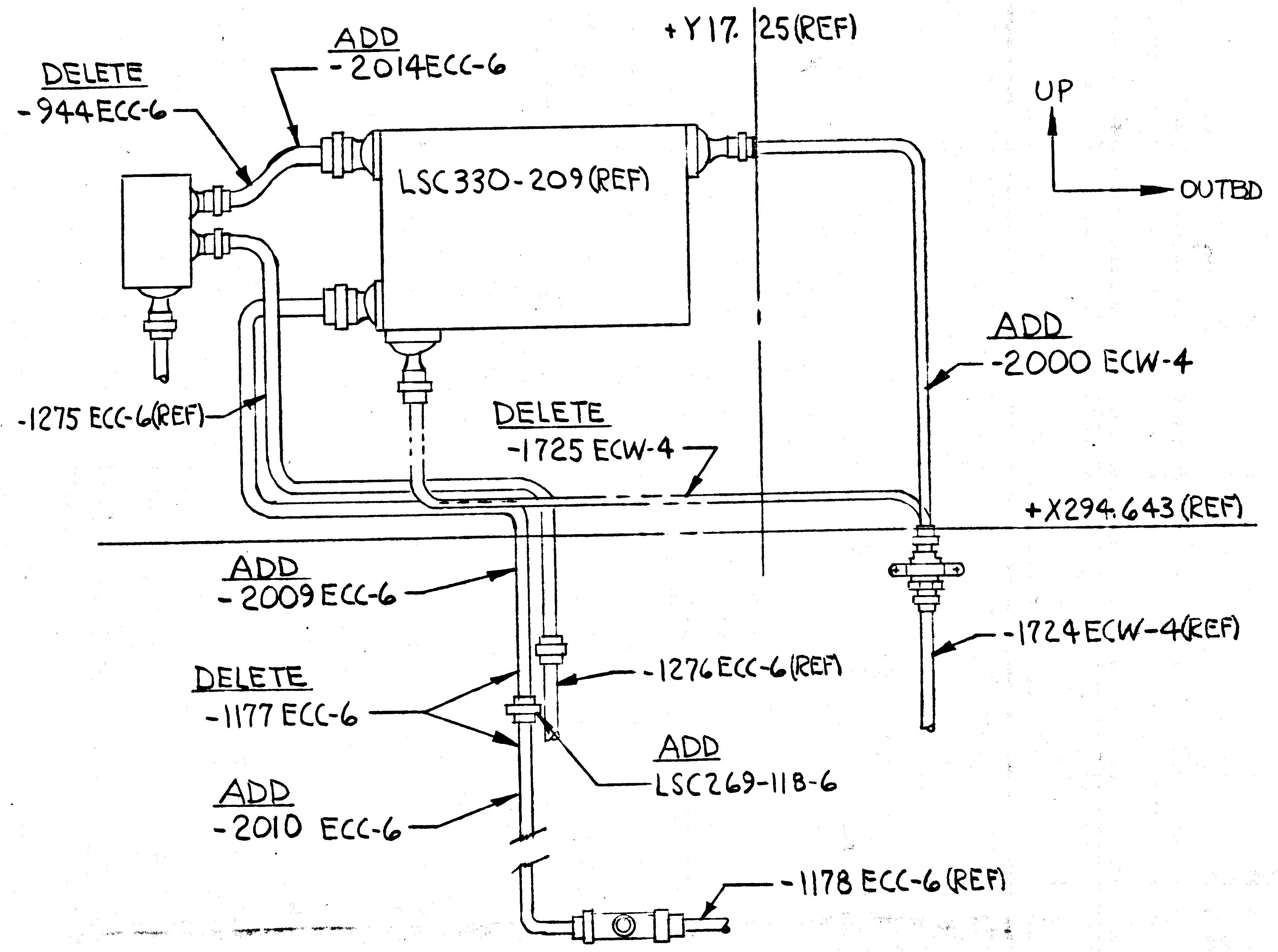
+Y17.25(REF)
DELETE
-944ECC-6
ADD
-2014ECC-6
LSC330-209(REF)
UP
OUTBD
-1275 ECC-6(REF)
DELETE
-1725 ECW-4
ADD
-2000 ECW-4
+X294.643(REF)
ADD
-2009ECC-6
-1724ECW-4(REF)
DELETE
-1177ECC-6
-1276ECC-6(REF)
ADD
LSC269-118-6
ADD
-2010 ECC-6
-1178 ECC-6(REF)

LDW280-52355-1 INSTL
VIEW LKG FWD -Z27.0 BHD R/H SIDE
(SH 4.00 ZONE 3B)

TUBE NUMBERS ARE DASH NUMBERS OF LDW280-16000 IN F/D & DESCRIPTION OF EO

DETAIL SPEC REQ	☐	CL II ENGRG CHG	☐	CL I ENGRG CHG	✓	LCD 1714	
REASON FOR EO REDESIGN OF LSC330-209 COOLANT WATER EVAPORATOR W/B				DESCRIPTION OF EO DELETED -944ECC-6, -1177ECC-6, -1725ECC-6; ADDED -2000 ECW-4, -2009ECC-6, -2010 ECC-6, -2014ECC-6, LSC269-118-6 (1) IN F/D & B/M ON -1 INSTL			GAEC EO RELEASE C JL 7-7-7

MODEL	PROCURING ACTIVITY NO.	GAEC UNIT NO.	SUB CONTR UNIT NO.	DRAWING CHANGE REQD: REVISE DWG	RECORD EO	DISPOSITION OF PARTS: REWORK	SCRAP
LM		LM-2(32)		✓		✓	

	APPROVED BY	DATE
VDI	JAF	7/6/67
SUPPORT		
RELIAB. GROUP		
GROUP LEADER		7/5/67
STRESS GROUP	CW	7/6/67
LIAISON ENGRG		
PROJ ENGRG		7/6/67
GOVT		7-7-67

PRIORITY	DRAWING TITLE	DRAWING NO.	EO NO.
C	LINES INSTL ENVIRONMENTAL CONTROL SUBSYSTEM, AFT EQUIP BAY	LDW280-52355	B7

ISSUED BY 6-29-67 J. DeVITA X1153 SECTION EQUIP LINES (VDI) GROUP NO. 332 PL 25

ENG 32.2 REV 3-65

B

GRUMMAN AIRCRAFT ENGINEERING CORP.
CODE IDENT NO. 26512
ENGINEERING ORDER

DWG. NO. LDW280-52355	EO NO. B8
CONTROL INFO NO. LDW230A7862	

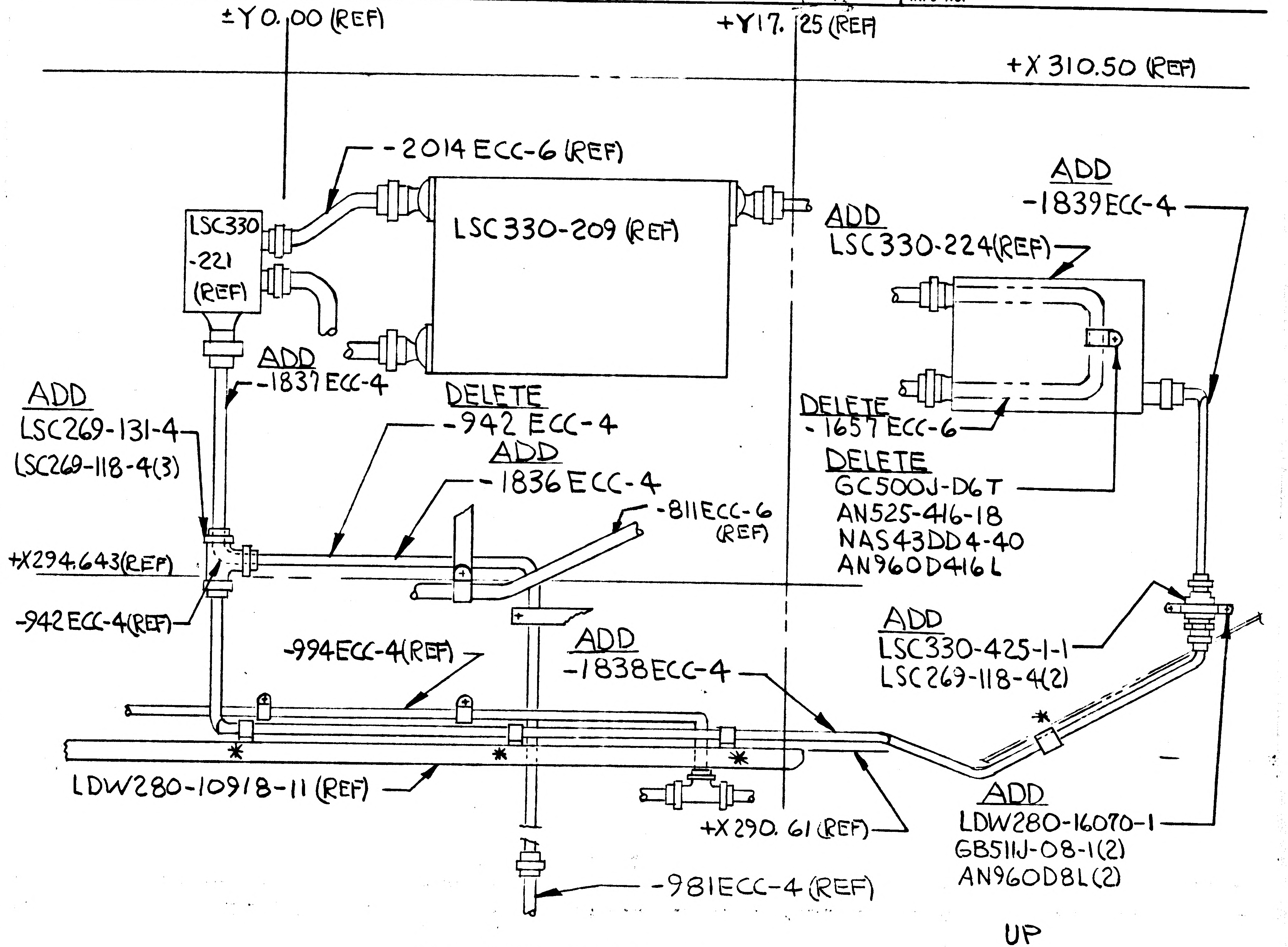
±Y0.00 (REF)
+Y17.25 (REF)
+X310.50 (REF)
-2014 ECC-6 (REF)
LSC330-209 (REF)
LSC330 -221 (REF)
ADD LSC330-224(REF)
ADD -1839 ECC-4
ADD -1837 ECC-4
ADD LSC269-131-4 LSC269-118-4(3)
DELETE -942 ECC-4
ADD -1836 ECC-4
-811 ECC-6 (REF)
DELETE -1657 ECC-6
DELETE GC500J-D6T AN525-416-18 NAS43DD4-40 AN960D416L
+X294.643(REF)
-942 ECC-4(REF)
-994 ECC-4(REF)
ADD -1838 ECC-4
ADD LSC330-425-1-1 LSC269-118-4(2)
LDW280-10918-11 (REF)
+X290.61 (REF)
ADD LDW280-16070-1 GB511J-08-1(2) AN960D8L(2)
-981 ECC-4 (REF)
UP
OUTBD

LDW280-52355-1 INSTL
VIEW LKG FWD -X 270 BHD R/S
(SH 4.00 ~~ZONE~~ 3B & 3C)

* REWORK INFO ONLY - ADD GC500J CLAMPS PER LPC 280-21

TUBE NUMBERS ARE DASH NUMBERS OF LDW280-16000 IN F/D & DESCRIPTION OF EO

DESCRIPTION OF EO CONTD
LSC269-131-4, LSC269-118-4(5); IN F/D ON -1 INSTL ADDED
LSC330-224(REF) & PICTURE OF LSC330-224(REF)

DETAIL SPEC REQ		CL II ENGRG CHG		CL I ENGRG CHG	✓	LCD 1594 ok						
REASON FOR EO REROUTED PIPING TO SUPPLEMENT FREON BOILER					DESCRIPTION OF EO ON-1 INSTL IN F/D & B/M DELETED -942 ECC-4 -1657 ECC-6; GC500J-D6T, AN525-416-18, NAS43DD4-40, AN960D416L; ADDED -1836 ECC-4, -1837 ECC-4, -1838 ECC-4, -1839 ECC-4, LDW280-16070-1, GB511J-08-1(2), AN960D8L(2), LSC330-425-1-1,						GAEC EO RELEASE JL 7-12-7	
MODEL	EFFECTIVITY PROCURING ACTIVITY NO.	GAEC UNIT NO.	SUB CONTR UNIT NO.		DRAWING CHANGE REQD ✓ REVISE DWG	RECORD EO	DISPOSITION OF PARTS ✓ REWORK	SCRAP	APPROVED BY			
									DATE 7/12			
									VDI	SUPPORT	RELIAB. GROUP	GROUP LEADER 7/12/67
									STRESS GROUP	LIAISON ENGRG	PROJ ENGRG 7/12/67	7-15-67
LM		LM-2 (32)			PRIORITY C	DRAWING TITLE LINES INSTL ENVIRONMENTAL CONTROL SUBSYSTEM AFT EQUIP BAY				DRAWING NO. LDW280-52355	EO NO. B8	

7-7-67
ISSUED BY J. DeVITA X1153 SECTION EQUIP LINES (VDI) GROUP NO. 332 PL 25

ENG 32.1 REV 3-65 B

GRUMMAN AIRCRAFT ENGINEERING CORP.
CODE IDENT NO. 26512

ENGINEERING ORDER

DWG. NO. LDW280-52355	EO NO. B9
CONTROL INFO NO. LDW280A7087	

TUBE NUMBERS ARE DASH NUMBERS OF LDW280-16000 IN F/D & DESCRIPTION OF EO

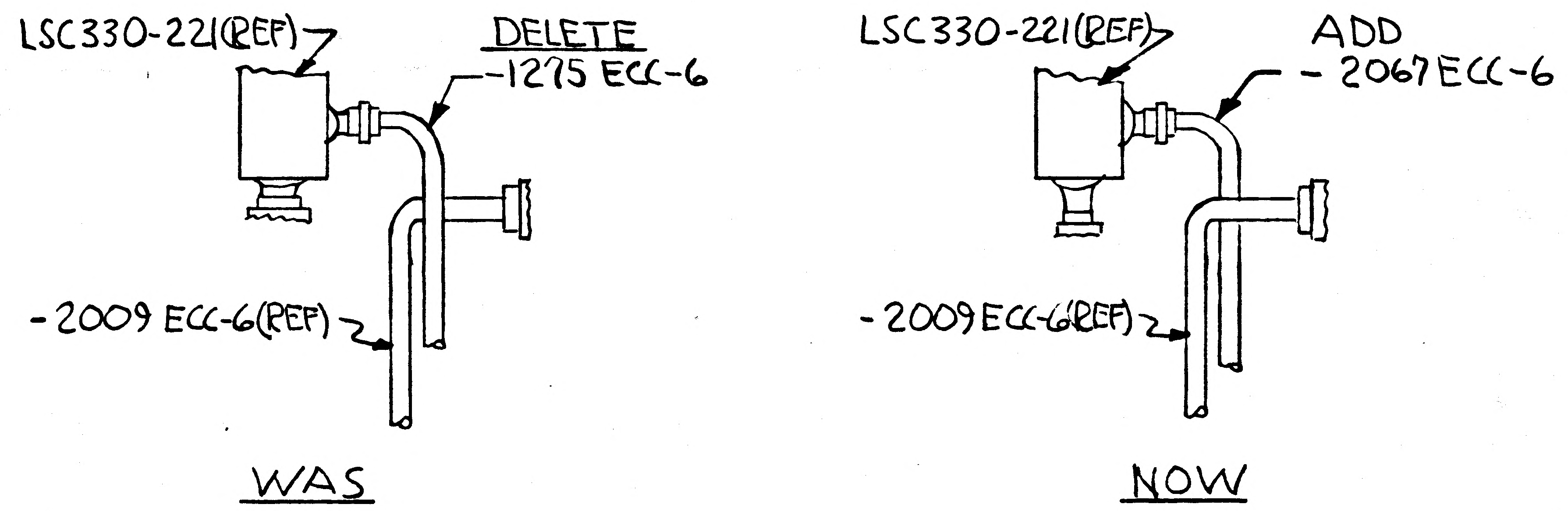

LDW280-52355-1
VIEW LKG FWD -227.00 BHD
(SH 400 ZONE 3C)

DETAIL SPEC REQ		CL II ENGRG CHC		CL I ENGRG CHG	✓	LCD * 1714

REASON FOR EO: REDESIGN OF LSC330-209 COOLANT WATER EVAPORATOR W/B

DESCRIPTION OF EO: IN F/D & B/M ON -1 INSTL DELETED -1275ECC-6; ADDED -2067ECC-6

GAEC EO RELEASE: JK 7/19/7

MODEL	EFFECTIVITY PROCURING ACTIVITY NO.	GAEC UNIT NO.	SUB CONTR UNIT NO.
LM		LM-2(32)	

DRAWING CHANGE REQD		DISPOSITION OF PARTS										
REVISE DWG	RECORD EO	REWORK	SCRAP	APPROVED BY	[illegible]			JW	EW [illegible]		[illegible]	Bott
✓		✓		DATE	7/12			7/11/67	7/14/67		7/15	7-19-67
					VD'	SUPPORT	RELIAB. GROUP	GROUP LEADER	STRESS GROUP	LIAISON ENGRG	PROJ ENGRG	~~GOVT~~

PRIORITY	DRAWING TITLE	DRAWING NO.	EO NO.
C	LINES INSTL ENVIRONMENTAL CONTROL SUBSYSTEM AFT EQUIP BAY	LDW280-52355	B9

ISSUED BY 7-11-67 J. DeVITA X1153 SECTION EQUIP. LINES (VDI) GROUP NO. 332 PL 25

01 NAS 9-1100

ENG 32.1 REV 3-66 B

GRUMMAN AIRCRAFT ENGINEERING CORP.
CODE IDENT NO. 26512 *
ENGINEERING ORDER

DWG. NO. LDW280-52355 | EO NO. B10
CONTROL INFO NO. LDW280A8031

ON-1 INSTL

IN F/D LSC330-425-1-3 MOUNTED BETWEEN LINES
LDW280-16000-1724ECW-4 & -2000 ECW-4 WAS
LSC330-425-1-1 (SH 400 ZONE 3B)

IN B/M LSC330-425-1-1(1) WAS LSC330-425-1-1(2)
ADD LSC330-425-1-3(1)

DETAIL SPEC REQ ☐ | CL II ENGRG CHG ☐ | CL I ENGRG CHG ☑ | LCD 1714 | 5

REASON FOR EO: DESIGN CHANGE OF FLOW LIMITER TO H_2O BOILER DUE TO LATEST TEST RESULTS OF HAMILTON STANDARD

DESCRIPTION OF EO: ON-1 INSTL IN F/D LSC330-425-1-3 WAS LSC330-425-1-1; IN B/M LSC330-425-1-1(1), WAS LSC330-425-1-1(2); ADDED LSC330-425-1-3(1)

GAEC EO RELEASE: JK 7/21/7 C

MODEL	PROCURING ACTIVITY NO.	GAEC UNIT NO.	SUB CONTR UNIT NO.
LM		LM-2(32)	

DRAWING CHANGE REQD: REVISE DWG ✓ | RECORD EO
DISPOSITION OF PARTS: REWORK ✓ | SCRAP

	VDI	SUPPORT	RELIAB GROUP	GROUP LEADER	STRESS GROUP	LIAISON ENGRG	PROJ ENGRG	
APPROVED BY				JW	JV			
DATE	7/18/67			7/17/67	7/19/67		7/20	-20-67

PRIORITY C

DRAWING TITLE: LINES INSTALLATION ENVIRONMENTAL CONTROL SUBSYSTEM AFT EQUIP BAY

DRAWING NO. LDW280-52355 | EO NO. B10

ISSUED BY 7-17-67 J. DeVITA X1153 SECTION EQUIP LINES (VDI) GROUP NO. 332 PL 25

01 NAS 9-1100

ENG 32.2 REV 3-65

B

GRUMMAN AIRCRAFT ENGINEERING CORP.
CODE IDENT NO. 26512
ENGINEERING ORDER

DWG. NO. LEO280 | EO NO. 708
CONTROL INFO NO. LDW280A9103

ADD THE FOLLOWING NOTE ✱ TO THE DRAWINGS LISTED BELOW:

✱ BONDING TO BE INACCORDANCE WITH LSP 390-001

(✱ = USE NEXT AVAILABLE NOTE NUMBER)

DRAWING NUMBER	EFFECTIVITY	CHANGE NUMBER
LDW280-28363	LM-2(32) THRU LM-15(45)	B2
-51365	LM-2(32) THRU LM-15(45)	A8
-51368	LM-2(32)	A9
-51369	LM-2(32), LM-3(33)	A3
-52350	LM-2(32)	D7
-52352		A5
-52353		B2
-52355		C1
-52364		B6
-52609	LM-2(32)	A5
-53352	LM-3(33)	A9
-53353	LM-3(33)	B5
-53355	LM-3(33)	A7
-53364	LM-3(33) THRU LM-15(45)	B7
-53368	LM-3(33)	B7
-53609	LM-3(33)	A7
-54352	LM-4(34) THRU LM-15(45)	B6
-54353		B2
-54355		B5
LDW280-54609	LM-4(34) THRU LM-15(45)	B7

DETAIL SPEC REQ ☐ CL II ENGRG CHG ☐ CL I ENGRG CHG ☑ LCD 1961 5

REASON FOR EO: TO UPDATE INSTL DWGS TO CURRENT BONDING REQUIREMENTS

DESCRIPTION OF EO: ADDED NOTE ✱

GAEC C EO RELEASE: JK 9/12/67

MODEL	PROCURING ACTIVITY NO.	GAEC UNIT NO.	SUB CONTR UNIT NO.
LM		NOTED	

DRAWING CHANGE REQD: REVISE DWG ✓ RECORD EO

DISPOSITION OF PARTS: NOT REQD (REWORK / SCRAP)

		SUPPORT	RELIAB. GROUP	GROUP LEADER	STRESS GROUP	LIAISON ENGRG	PROJ ENGRG	
APPROVED BY	CPB			JW	NW CW		WPD	
DATE	9/8/67			9/8/67	9/9/67		9/11/67	9-12-67
	VDI							

PRIORITY: C

DRAWING TITLE: LINES ELECTRONIC & PIPING INSTL ASCENT STAGE & DESCENT STAGE

DRAWING NO. LEO 280

EO NO. 708

9-14-67
ISSUED BY J. DE VITA X1153 (9-7-67)

SECTION EQUIP LINES (VDI)

GROUP NO. 332 PL 25

01
NAS 9-1100

RELEASED BY LIAISON

ENG 32.1 REV 3-65

GRUMMAN AIRCRAFT ENGINEERING CORP.
CODE IDENT NO. 26512
ENGINEERING ORDER

DWG. NO. LDW 28052355
EO NO. C2
CONTROL INFO NO. LM-5-13628

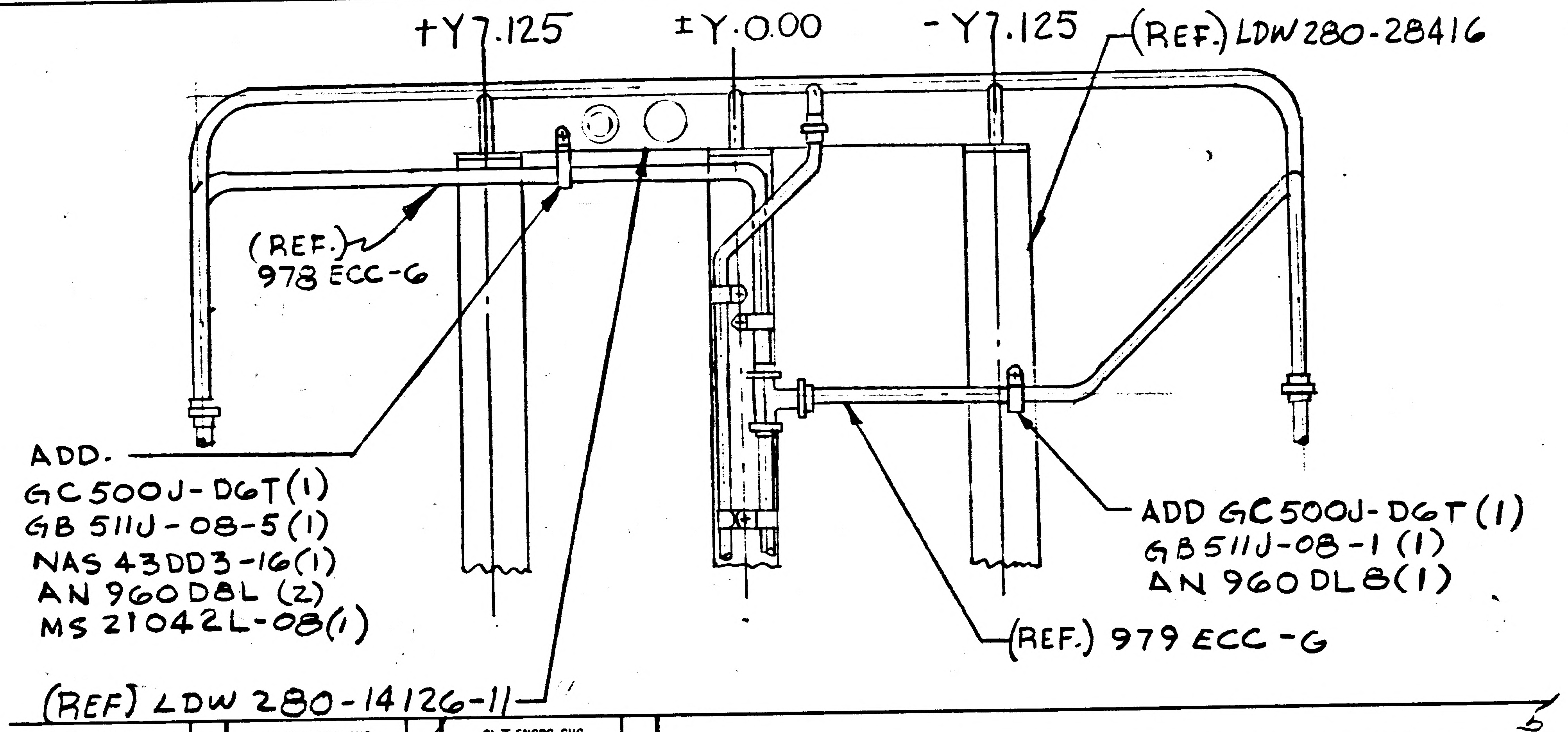
+Y7.125
±Y.0.00
-Y7.125
(REF.) LDW280-28416
(REF.) 978 ECC-6
ADD.
GC500J-D6T(1)
GB 511J-08-5(1)
NAS 43DD3-16(1)
AN 960 D8L (2)
MS 21042L-08(1)
ADD GC500J-D6T (1)
GB511J-08-1 (1)
AN 960 DL8(1)
(REF.) 979 ECC-G
(REF) LDW 280-14126-11

DETAIL SPEC REQ		CL II ENGRG CHG	✓	CL I ENGRG CHG	

REASON FOR EO: SUPPORT FOR 978ECC-6 & 979ECC-6

DESCRIPTION OF EO: ADD NAS43DD3-16(1) ADD GB511J-08-5(1) GC500J-D6T (2) GB511J-08-1 (1) AN 960DL8(3) MS 21042L-08(1.)

GAEC EO RELEASE

MODEL	EFFECTIVITY		
	PROCURING ACTIVITY NO.	GAEC UNIT NO.	SUB CONTR UNIT NO.
LM		LM 2(32)	

DRAWING CHANGE REQD		DISPOSITION OF PARTS	
REVISE DWG	RECORD EO	REWORK	SCRAP
✓		✓	

				GROUP LEADER	STRESS GROUP	LIAISON ENGRG	PROJ ENGRG	GOVT
APPROVED BY				—	MJS			
DATE	9/28/67			—	9/23/67	9-25-67	9/28/67	9/29/67
	VDI	SUPPORT	RELIAB. GROUP					

PRIORITY: C
DRAWING TITLE: RACK ASSEMBLY ASCENT STAGE-AFT EQUIP BAY
DRAWING NO.: LDW 280-52355
EO NO.: C2

ISSUED BY LIAISON E. ROSADO/F.P. SECTION V.D.1. GROUP NO. 332 PL 5

01

NAS 9-1100

GRUMMAN AIRCRAFT ENGINEERING CORP.
CODE IDENT NO. 26512
ENGINEERING ORDER

ENG 32.1 REV 3-65

DWG. NO. LEO 280
EO NO. 769
CONTROL INFO NO. LDW280B0076

DELETE NOTE * FROM THE FOLLOWING DWGS

DRAWING NUMBER	EFFECTIVITY	CHANGE NUMBER	NOTE *
LDW280-52353 ✓	LM-2(32)	C1	8
-52354 ✓	LM-2(32)	A6	3
-52355 ✓	LM-2 (32)	D1	8
-52356	LM-2 (32)	A8	5
-52351	LM-2 (32)	A9	5
-52350	LM-2(32)	E1	31
LDW 280 -52608	LM-2(32)	D2	7

DETAIL SPEC REQ ☐ CL II ENGRG CHG ☐ CL I ENGRG CHG ☑ LCD 1961

5

REASON FOR EO: BONDING NOTE NOT REQD

DESCRIPTION OF EO: DELETED NOTE *

GAEC EO RELEASE C

MODEL	EFFECTIVITY		
	PROCURING ACTIVITY NO.	GAEC UNIT NO.	SUB CONTR UNIT NO.
LM		LM-2(32)	

DRAWING CHANGE REQD		DISPOSITION OF PARTS		APPROVED BY								
✓		NOT	REQD	DATE	10/24/67			10/26/67	10/27/67		10/31/67	10/30-67
REVISE DWG	RECORD EO	REWORK	SCRAP	E	VDI	SUPPORT	RELIAB. GROUP	GROUP LEADER	STRESS GROUP	LIAISON ENGRG	PROJ ENGRG	

PRIORITY: C
DRAWING TITLE: LINES PIPING INSTL ASCENT STAGE & DESCENT STAGE
DRAWING NO.: LEO280
EO NO.: 769

11-2-67
ISSUED BY J. DE VITA X1153 (10-25-67) SECTION EQUIP LINES (VDI) GROUP NO. 332 PL 25

01

NAS 9-1100

ENG 32.2 REV 3-65

GRUMMAN AIRCRAFT ENGINEERING CORP.
CODE IDENT NO. 26512
ENGINEERING ORDER

DWG. NO. LDW280-52355		EO NO.	DZ
CONTROL INFO NO. LDW280B0119			

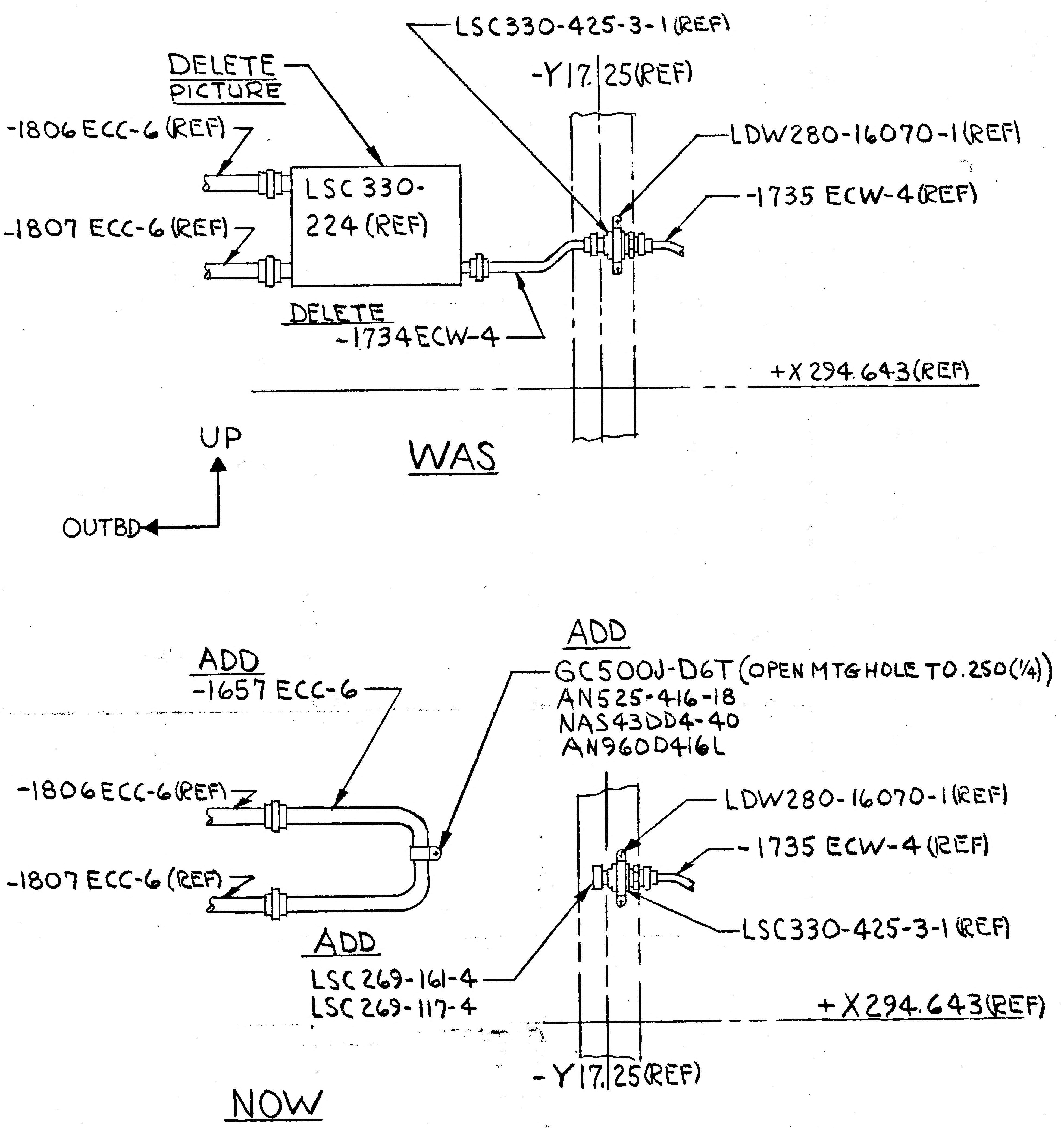

LSC330-425-3-1(REF)
DELETE PICTURE
-Y17.25(REF)
LDW280-16070-1(REF)
-1806 ECC-6(REF)
LSC 330-224 (REF)
-1735 ECW-4(REF)
-1807 ECC-6(REF)
DELETE -1734ECW-4
+X 294.643(REF)
UP
OUTBD
WAS
ADD
ADD -1657 ECC-6
GC500J-D6T (OPEN MTG HOLE TO .250(1/4))
AN525-416-18
NAS43DD4-40
AN960D416L
-1806ECC-6(REF)
LDW280-16070-1(REF)
-1735 ECW-4(REF)
-1807 ECC-6(REF)
LSC330-425-3-1(REF)
ADD
LSC269-161-4
LSC269-117-4
+X294.643(REF)
-Y17.25(REF)
NOW

LDW280-52355-1 INSTL
VIEW LKG FWD -Z27.00 BHD
(SH 5.00 ZONE 9-B)

DETAIL SPEC REQ		CL II ENGRG CHG		CL I ENGRG CHG	✓ LCD 2223 CCA745						(5)
REASON FOR EO LSC330-224 (H₂O BOILER) NOT REQD					DESCRIPTION OF EO ON-1 INSTL IN F/D DELETED PICTURE OF LSC330-224(REF); IN F/D & B/M DELETED -1734ECW-4; ADDED -1657 ECC-6, LSC269-161-4, LSC269-117-4, GC500J-D6T, AN525-416-18, NAS43DD4-40, AN960D416L						Ⓡ GAEC EO RELEASE JK 10/21/67
MODEL	EFFECTIVITY: PROCURING ACTIVITY NO.	GAEC UNIT NO.	SUB CONTR UNIT NO.	DRAWING CHANGE REQD	DISPOSITION OF PARTS	APPROVED BY					
				REVISE DWG ✓	REWORK ✓	DATE	10/20/67			10/27/67	10/30/67
LM		LM-2(32)		RFCORD EO	SCRAP	A	VDI	SUPPORT	RELIAB. GROUP	GROUP LEADER	STRESS GROUP
				PRIORITY C	DRAWING TITLE LINES INSTL ENVIRONMENTAL CONTROL SUBSYSTEM AFT EQUIP BAY				DRAWING NO. LDW280-52355		EO NO. DZ

			LIAISON ENGRG	PROJ ENGRG 10/30/67	10-31-67

11-02-67
ISSUED BY J. DeVITA (10/26/67) 7033 SECTION EQUIP LINES (VDI) GROUP NO. 332 PL 25

01 NAS 9-1100

ENG 32.1 REV 3-65

GRUMMAN AIRCRAFT ENGINEERING CORP.
CODE IDENT NO. 26512

ENGINEERING ORDER

DWG. NO. LDW280-52355
EO NO. D3
CONTROL INFO NO. LM-5-17326

IN FLD & B/M (ON-1)

LDW330M10028-5 (S/B) LDW330M10028-11

RELEASED BY LIAISON

DETAIL SPEC REQ		CL II ENGRG CHG	✓	CL I ENGRG CHG		LCR19-1594	5

REASON FOR EO: FOLLOW UP CHG ON N/A FOR DET'L PART

DESCRIPTION OF EO: IN FLD & B/M (ON-1) LDW280M10028-11 (WAS) LDW280M10028-5

GAEC EO RELEASE: C

MODEL	PROCURING ACTIVITY NO.	GAEC UNIT NO.	SUB CONTR UNIT NO.
LM		LM2 (32)	

DRAWING CHANGE REQD: REVISE DWG ✓ RECORD EO ☐

DISPOSITION OF PARTS: REWORK ✓ SCRAP ☐

APPROVED BY								
DATE	12/2/67			—	11-14-67	11-14-67	12/2/67	11-14-67
	VD1	SUPPORT	RELIAB. GROUP	GROUP LEADER	STRESS GROUP	LIAISON ENGRG	PROJ ENGRG	~~SUBT~~

PRIORITY: C

DRAWING TITLE: LINES INSTL, ENVIRONMENTAL CONT SUS SYS - AFT EQUIP BAY

DRAWING NO.: LDW280-52355

EO NO.: D3

ISSUED BY LIAISON M.D. Reyes X86755 SECTION VD1/J. WOLF GROUP NO. 335 PL 25

01

NAS 9-1100

LDW280-52356A

MODEL OR END ITEM	NEXT ASSY	MODULE OR SER NO.	REQD PER MODULE OR END ITEM
LEM	LDW280-52001	LEM-2,3,?	1 EACH
PART NO. LDW280-52356-1		GAEC SCH NO. 30-	

TO BE REDRAWN ON PRODUCTION FORMAT

SH REV STATUS FOR DESCRIPTION OF REV SEE SUBQ SH

SHEET	1.00	2.00	2.01	2.02	2.03	2.04	2.05	3.00
REV	A	A				A	A	A
SHEET	4.00	5.00	6.00	7.00	8.00	10	11	
REV	A		A	A	A	A	A	
SHEET								
REV								

LAST SECT LTR USED	F-F
LAST DASH NO USED	-9

GRUMMAN REC INFO A

PRM NO.	
500	WP

UNLESS OTHERWISE SPECIFIED DIMENSIONS ARE IN INCHES

TOLERANCE UNLESS SPECIFIED FRACTIONS - DECIMALS - ANGLES

ORIG DWG AUTH

DETAIL SPEC REQUIREMENT

CLASS II ENGRG CHANGE

CLASS I ENGRG CHANGE

CONTRACT NO. NAS 9-1100 | LINE ITEM 100 | DOCUMENTATION TYPE II

DRAWN BY	E.BIANCHI	WEIGHTS	L. Garcia
LAYOUT BY	COHEN/COMMISSO		
CHECKED BY			
SP.LDR.	JW		
VDI			
STRUCTURES	9-13	PROJ ENGR	R M Carbee 9-14
STRUCTURES		REL GROUP	9-22-66

GRUMMAN AIRCRAFT ENGRG CORP
BETHPAGE L. I. NEW YORK

LINES INSTALLATION
REACTION CONTROL SUBSYSTEM
ASCENT STAGE

SIZE	CODE IDENT NO.		
B	26512	LDW280-52356	A
SCALE NONE		SHEET 1 OF 13	

ENG 77.1 12-65

C.D.R. 10 SEPT 1966

01

NAS 9-1100

REVISIONS FOR CONTINUATION OF REVISIONS SEE SHEET 1.11

CHANGE LTR	ITEM NO.	SHEET NO.	ZONE	GRUMMAN INFO ONLY PRIOR TO EVENT	DET SPEC	CLASS I	CLASS II	ENGRG ORDER	DESCRIPTION	EFFECTIVITY	DISPOSITION OF EXISTING PARTS REWORK	DISPOSITION OF EXISTING PARTS SCRAP	CHANGED BY AND DATE	ENGRG APPD	GOVT APPD
									ADDED SHEETS 1.10 & 1.11 SHEET 1 OF 15 WAS SHEET 1 OF 13						
A	1	3.00					✓	EO A1 LEO280-314	ADDED NOTE 9.	LM-2 (32)	NOT REQD.		J.W. FOGARTY DEC. 12, 1967		
	2	1.00 2.00 3.00		6				EO A2	IN MODEL BLOCK DELETED LDW280-52356-3,-5-7&-9. LDW280-52356-3,-5,-7&-9 LINES ASSY WAS LDW280-52356-3,-5,-7&-9 LINES INSTL. ON-1 INSTL: ADD 1EA. LDW280-52356-3,-5,-7&-9 ASSY'S. IN NOTE 7 LDW280-52356-3,-5,-7&-9 ASSY WAS LDW280-52356-3,-5,-7&-9 INSTL.	NOT REQD.					
	3	4.00 2.05	4B	1				EO A3	ON-1 INSTL: ADDED NAS43DD3-4(2)	LM-2 (32)	✓				
	4	4.00 2.04	5B	1				EO A4 LCD-1077	ON-1 INSTL: LSC269-317-1(2) WAS LSC269-202-4(2). LSC269-202-4(2) WAS LSC269-202-4(4); ADDED LSC269-317-1(2).						
	5	7.00 2.05	29B 31B	1				EO A5	ON-1 INSTL: ADDED NAS42DD5-56(2).						
	6	6.00 8.00 3.00 2.05	15B 24B 38C 44C	H		✓		EO A6 LCD2126	ON-3,-5,-7&-9 ASSY. ADDED MS20995NC51 LOCKWIRE (AS REQD.) FOR LDW310-10023 NUT. SEE NOTE 10. ADDED NOTE 10.						
	7	6.00	16B				✓	EO A7 LEO280-716	ON-5 INSTL: -1020 RCF6 WAS -1024 RC06. -1024 RC06 WAS -1020 RCF6.	NOT REQD	NOT REQD.				

CHG APPROVED

LTR	GROUP LDR	VDI			STRUCTURES	STRUCTURES
A	JW 12/4/67				cw	

GRUMMAN AIRCRAFT ENGRG CORP., BETHPAGE, L. I., NEW YORK

SIZE	CODE IDENT NO.		
B	26512	LDW280-52356	A

SCALE NONE SHEET 1.10 (A)

ENG 77.16 3-66

01

NAS 9-1100

REVISIONS FOR CONTINUATION OF REVISIONS SEE SHEET ______

CHANGE LTR	ITEM NO.	SHEET NO.	ZONE	GRUMMAN INFO ONLY PRIOR TO EVENT	DET SPEC	CLASS I	CLASS II	ENGRG ORDER	DESCRIPTION	EFFECTIVITY	DISPOSITION OF EXISTING PARTS REWORK	DISPOSITION OF EXISTING PARTS SCRAP	CHANGED BY AND DATE	ENGRG APPD	GOVT APPD
A	8	3.00		E		✓		EO A8 LCD 1961 LE0280-769	DELETED NOTE 5	LM-2 (32)	NOT REQ'D.		J.W. FOGARTY DEC. 12, 1967		
	9	6.00	16B				✓	EO A9 (L)	ON-5 ASSY. CORRECTED PICTURE OF LINE RUN FOR -1024 RCO-6 & -1020 RCF-6. -1024 RCO-6 WAS -1020 RCF-6. -1020 RCF-6 WAS -1024 RCO-6. (DWG. CORRECTION)						

CHG APPROVED

LTR	GROUP LDR	VDI			STRUCT.	STRUCT
A	12/14/67	12/14			—	

GRUMMAN AIRCRAFT ENGRG CORP., BETHPAGE, L. I., NEW YORK

SIZE	CODE IDENT NO.		
B	26512	LDW280-52356	A

SCALE NONE SHEET 1.11

(A)

ENG 77.16 3-66

01

NAS 9-1100

CL		-9	-7	-5	-3	-1	CODE IDENT	PART NO.	I&T	NOMENCLATURE OR DESCRIPTION	MATERIAL	GOVT SPEC	COML SPEC	STOCK SIZE	PROCESS SYM	FINISH NO.	ZONE
								LDW280-1600	E								
M						1		-663RCO-10		TUBE	SEE DWG						
						1		-662RCF-10									
						1		-661RCF-10									
						1		-660RCF-10									
						1		-659RCO-10									
						1		-658RCO-10									
						1		-649RCO-10									
						1		-648RCF-10									
						1		-647RCO-10									
						1		-646RCF-10									
						1		-643RCO-10									
						1		-642RCF-10									
						1		-641RCO-10									
						1		-640RCF-10									
						1		-603RCO-10									
						1		-602RCF-10									
						1		-601RCO-10									
						1		-600RCF-10									
						1		-076RCF-10									
						1		-060RCF-10									
						1		-057RCO-10									
M						1		-045RCO-10		TUBE	SEE DWG						
								LDW280-16000									
						1		LDW280-52356-9		LINES ASSY CLUSTER IV							
						1		-7		III							
						1		-5		II							
						1		-3		LINES ASSY CLUSTER I							
								LDW280-52356-1	E	LINES INSTL							

QTY PER ASSEMBLY

CL = CLEANLINESS LEVEL

SYM OR NO.	PROCESS OR FINISH	GRUMMAN SPEC OR MILITARY SPEC	SYM OR NO.	PROCESS OR FINISH	GRUMMAN SPEC OR MILITARY SPEC	SYM OR NO.	PROCESS OR FINISH	GRUMMAN SPEC OR MILITARY SPEC

I & T: IDENTIFICATION AND TRACEABILITY IN ACCORDANCE WITH: NONE

GRUMMAN AIRCRAFT ENGRG CORP, BETHPAGE, L. I., NEW YORK

SIZE	CODE IDENT NO.		
B	26512	LDW280-52356	A

SCALE NONE

SHEET 2.00

ENG 77.2 7-65

01

NAS 9-1100

A		10	-		10	60		MS21042L08	E	NUT	STD PART						
			4	4				MS21040L7		NUT	STD PART						
		20			20	120		AN960D8L		WASHER	STD PART						
A			4	4				AN960D716L		WASHER	STD PART						
M						2		LSC269-227-4		ELBOW	SEE NOTE #1						
						1		LSC310 -406-4		FILTER	SEE NOTE #1						
						1		-406-3		FILTER							
						8		-125-4		FILTER							
						8		LSC310-125-3		FILTER							
						2		LSC269 -234-25		TEE REDUCER							
						4		-234-24		TEE REDUCER							
						12		-204-10		TEE							
		3	4	4	3			-203-6		ELBOW							
						2		-202-12		ELBOW							
						4		-202-10		ELBOW							
						2		-202-4		ELBOW							
						4		-201-10		CROSS							
						2		-200-12		UNION							
						74		-200-10		UNION							
M		5	4	4	5			LSC269-200-6		UNION	SEE NOTE #1						
						2		LSC269-317-1		ELBOW	SEE NOTE #1						
C						1		LDW360-28252-1		TRANSDUCER INSTL	SEE DWG						
M		4			4			LDW310-21010-5		FITTING "Y"	SEE DWG						
			4	4				LDW310-21010-1		FITTING "Y"							
		4	4	4	4			LDW310-10023-7		ELBOW							
		2			2			-5		ELBOW							
		1	2	2	1			-3		ELBOW							
M		1	2	2	1			LDW310-10023-1	E	UNION	SEE DWG						
CL		-9	-7	-5	-3	-1	CODE IDENT	PART NO.	I&T	NOMENCLATURE OR DESCRIPTION	MATERIAL	GOVT SPEC	COML SPEC	STOCK SIZE	PROCESS SYM	FINISH NO.	ZONE
		QTY PER ASSEMBLY															

SYM OR NO.	PROCESS OR FINISH	GRUMMAN SPEC OR MILITARY SPEC	SYM OR NO.	PROCESS OR FINISH	GRUMMAN SPEC OR MILITARY SPEC	SYM OR NO.	PROCESS OR FINISH	GRUMMAN SPEC OR MILITARY SPEC

I & T: IDENTIFICATION AND TRACEABILITY IN ACCORDANCE WITH : NONE

GRUMMAN AIRCRAFT ENGRG CORP, BETHPAGE, L. I., NEW YORK

SIZE	CODE IDENT NO.		
B	26512	LDW280-52356	A

SCALE NONE

SHEET 2.04

Ⓐ

ENG 77.2 7-66

01

NAS 9-1100

CL	QTY PER ASSEMBLY						CODE IDENT	PART NO.	I&T	NOMENCLATURE OR DESCRIPTION	MATERIAL	GOVT SPEC	COML SPEC	STOCK SIZE	PROCESS SYM	FINISH NO.	ZONE
		-9	-7	-5	-3	-1											
A						2		NAS42DD5-56	E	SPACER	STD PART						
A						2		NAS43DD3-4	E	SPACER	STD PART						
A		AS REQD	AS REQD	AS REQD	AS REQD			MS20995NC51	E	LOCKWIRE	STD PART						
A						6		GC12H-12	E	CLAMP	GRUM STD						
A						54		GC12H-10	E	CLAMP	GRUM STD						
A		4			4			GC12H-6	E	CLAMP	GRUM STD						
A		2			2			GB511J-08-02	E	BOLT	GRUM STD						
A		8			8	60		GB511J-08-01	E	BOLT	GRUM STD						
A			4	4				NAS509-7	E	NUT	STD PART						

SYM OR NO.	PROCESS OR FINISH	GRUMMAN SPEC OR MILITARY SPEC	SYM OR NO.	PROCESS OR FINISH	GRUMMAN SPEC OR MILITARY SPEC	SYM OR NO.	PROCESS OR FINISH	GRUMMAN SPEC OR MILITARY SPEC

I & T: IDENTIFICATION AND TRACEABILITY IN ACCORDANCE WITH : NONE

GRUMMAN AIRCRAFT ENGRG CORP, BETHPAGE, L. I., NEW YORK

SIZE B | CODE IDENT NO. 26512 | LDW280-52356 | A

SCALE NONE | SHEET 2.05

(A)

ENG 77.2 7-65

01 NAS 9-1100

NOTES:

1. COMMERCIAL PART, SEE SPECIFICATION CONTROL DRAWING BEFORE ORDERING
2. INDUCTION BRAZE IN ACCORDANCE WITH LSP-14-6303 AND LSP-14-6304
3. PROPELLANT FEED VALVES AND FITTINGS SHALL BE CLEANED TO LEVEL "M" OF LSP-14-0011. UPON INSTALLATION OF COMPONENTS INTO A SUBSYSTEM LEVEL "F" OF LSP-14-0011 SHALL BE MAINTAINED
4. TUBE NUMBERS ARE DASH NUMBERS OF DWG LDW280-16000
5. ~~BONDING IN ACCORDANCE WITH LSP390-001~~
6. LDW310-10023 FITTINGS TO BE TORQUED TO 25 FOOT LBS ± 5 FOOT LBS
7. ALL LINES ON LDW280-52356-3, -5, -7 & -9 ASSY THAT ARE BRAZED MUST BE CLEANED TO LEVEL "M" OF LSP-14-0011 SUBSEQUENT TO BRAZING AND PRIOR TO INSTALLATION ON VEHICLES
8. RCS-19 = REACTION CONTROL SYSTEM .165-.171 [DRILL #19]
9. SUBSTITUTION OF NAS1132V, AN525-832R OR AN525-832 BOLTS FOR THE GB511J-08 BOLT IS PERMISSIBLE.
10. SAFETY WIRING TO BE INSTALLED PER MS 33540.

GRUMMAN AIRCRAFT ENGRG CORP., BETHPAGE, L. I., NEW YORK

SIZE	CODE IDENT NO.		
B	26512	LDW280-52356	A

SCALE NONE
SHEET 3.00 Ⓐ

01
NAS 9-1100

7
6
5
4
3

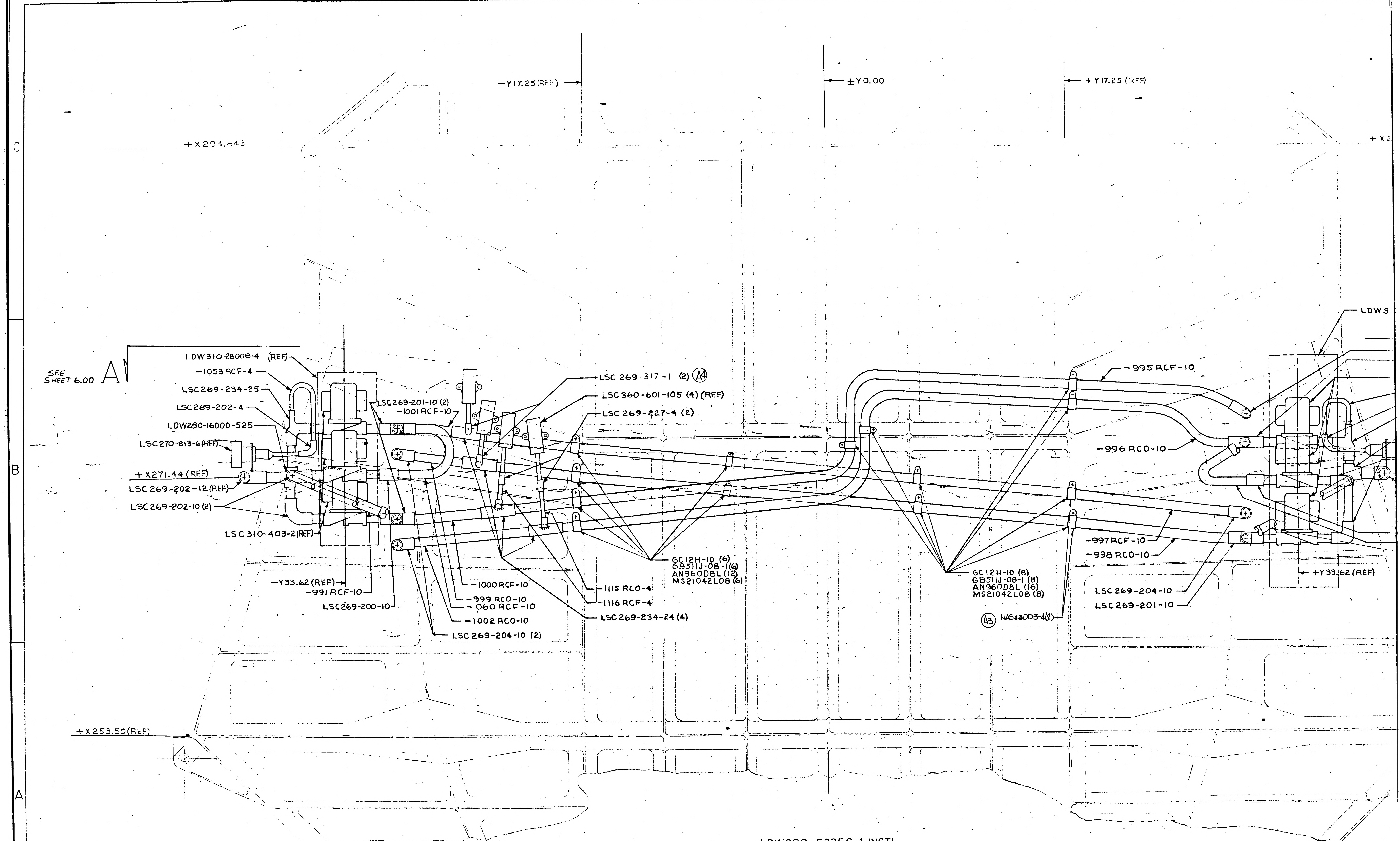
C
B
A
-Y17.25(REF)
±Y0.00
+Y17.25 (REF)
+X294.043
+X2
LDW3
SEE SHEET 6.00 A
LDW310-28008-4 (REF)
-1053 RCF-4
LSC269-234-25
LSC269-202-4
LDW280-16000-525
LSC270-813-6(REF)
+X271.44 (REF)
LSC 269-202-12(REF)
LSC269-202-10(2)
LSC 310-403-2(REF)
-Y33.62 (REF)
-991 RCF-10
LSC269-200-10
LSC269-201-10 (2)
-1001 RCF-10
LSC 269-317-1 (2) (A4)
LSC 360-601-105 (4) (REF)
LSC 269-227-4 (2)
-1000 RCF-10
-999 RCO-10
-060 RCF-10
-1002 RCO-10
LSC269-204-10 (2)
-1115 RCO-4
-1116 RCF-4
LSC 269-234-24 (4)
GC12H-10 (6)
GB511J-08-1(6)
AN960D8L (12)
MS21042L08 (6)
GC12H-10 (8)
GB511J-08-1 (8)
AN960D8L (16)
MS21042L08 (8)
(A3) NAS43DD3-4(2)
-995 RCF-10
-996 RCO-10
-997 RCF-10
-998 RCO-10
LSC269-204-10
LSC269-201-10
+Y33.62 (REF)
+X253.50(REF)

LDW280-52356-1 INSTL.
VIEW LOOKING FORWARD
-Z27.00 BULKHEAD

01/02 NAS 9-1100

7
6
5
4
3

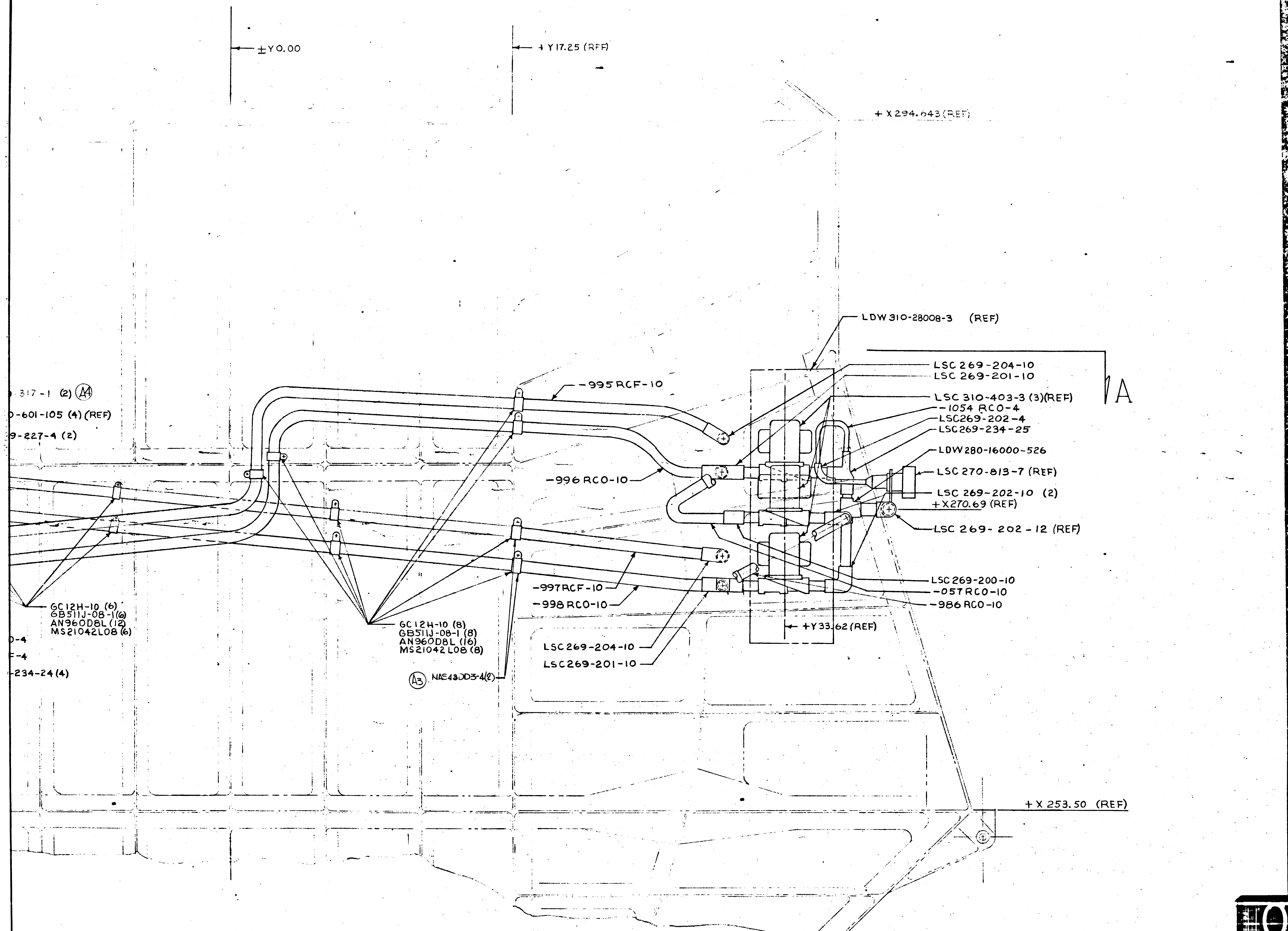
±Y0.00
+Y17.25 (REF)
+X294.643 (REF)
LDW310-28008-3 (REF)
LSC269-204-10
LSC269-201-10
LSC310-403-3 (3)(REF)
-1054 RCO-4
LSC269-202-4
LSC269-234-25
LDW280-16000-526
LSC270-813-7 (REF)
LSC269-202-10 (2)
+X270.69 (REF)
LSC269-202-12 (REF)
A
-995 RCF-10
-996 RCO-10
)-317-1 (2) A4
)-601-105 (4) (REF)
9-227-4 (2)
D-4
F-4
-234-24 (4)
GC12H-10 (6)
GB511J-08-1 (6)
AN960D8L (12)
MS21042L08 (6)
GC12H-10 (8)
GB511J-08-1 (8)
AN960D8L (16)
MS21042L08 (8)
A3 NAS43DD3-4 (2)
-997 RCF-10
-998 RCO-10
LSC269-204-10
LSC269-201-10
LSC269-200-10
-057 RCO-10
-986 RCO-10
+Y33.62 (REF)
+X253.50 (REF)

LDW280-52356-1 INSTL.
VIEW LOOKING FORWARD
-Z27.00 BULKHEAD

MANUFACTURING OPERATIONS

UNLESS OTHERWISE SPECIFIED
NOTES CHECKED √ APPLY TO THIS DWG.

PART NUMBER AND ALL OTHER MARKINGS IN REGION MARKED ▭ USE BOTH SIDES IF NECESSARY.	
FILLET AND INSIDE CORNER RADII TOLERANCES .016R TO .062R ± .010 .063R TO .250R ± .015 OVER .250R ± .030	
DEPTH SHOWN FOR TAPPED HOLES IS FULL THDS. 2-3 IMP THDS. BEYOND PERMISSIBLE.	
EXTERNAL THREAD LENGTH SHOWN INCLUDES 2 IMPERFECT THREADS MAX.	
DO NOT CADMIUM PLATE & PAINT HOLES OR SURFACES MARKED WITH DOUBLE ASTERISK.	
MISMATCH STEP OF ± .005 PERMISSIBLE DUE TO CHANGE OF CUTTERS AT INSIDE INTERSECTING SURFACES.	
DIAMETERS MARKED MUST BE CONCENTRIC WITHIN FULL INDICATOR READING	
HOLES MUST BE KEPT FREE OF CHROME PLATING SOLUTION.	
ALL DIMENSIONS SHOWN TO BE MET AFTER CADMIUM PLATING. THICKNESS OF PLATE .0003 MIN. TO .0005 MAX. MIN. THICKNESS TO BE .0002 ON THREADED AREAS. NO ALLOWANCE FOR PLATING IN HOLES	
125 √ SURFACE ROUGHNESS INCLUDING REAMED HOLES PER MIL-STD-10	
200 √ FOR ALL DRILLED HOLES	
REMOVE ALL BURRS. BREAK ALL EDGES .015-.031	
INSPECTION INFORMATION MINIMUM PERMISSIBLE AVERAGE EDGE DISTANCE MARKED IS	
SYMBOL √ DENOTES SURFACE TO BE MACHINED	
UNLESS OTHERWISE SPECIFIED TOLERANCE ON FLANGES IS ± 1/32	
LENGTHS OF AN, NAS & MS AL ALY RIVETS SHORTER THAN 1 INCH ARE NOT SPECIFIED.	
TOLERANCE ON LOFTED DELINEATIONS IS	

DWG SIZE 34 X 65 = 15.31 SQ. FT

PRINTING INFO ONLY
FULL SIZE SHEET AREA (36 X) = 17.19 SQ FT.
1/2 SIZE SHEET AREA (1/4 OF FULL) = 4.44 SQ FT.

PRINT TRIM LINE

LDW280-52356A

LDW280-52356A

LDW280-52356A

02/02

NAS 9-1100

THIS IS AN ORIGINAL DRAWING

	GRUMMAN AIRCRAFT ENGRG CORP., BETHPAGE, L. I., NEW YORK			
LEM-2(32)	SIZE J	CODE IDENT NO. 26512	LDW280-52356	A
MODEL OR END ITEM	SCALE HALF		SHEET 4.00	

Ⓐ

THIS IS AN ORIGINAL DRAWING

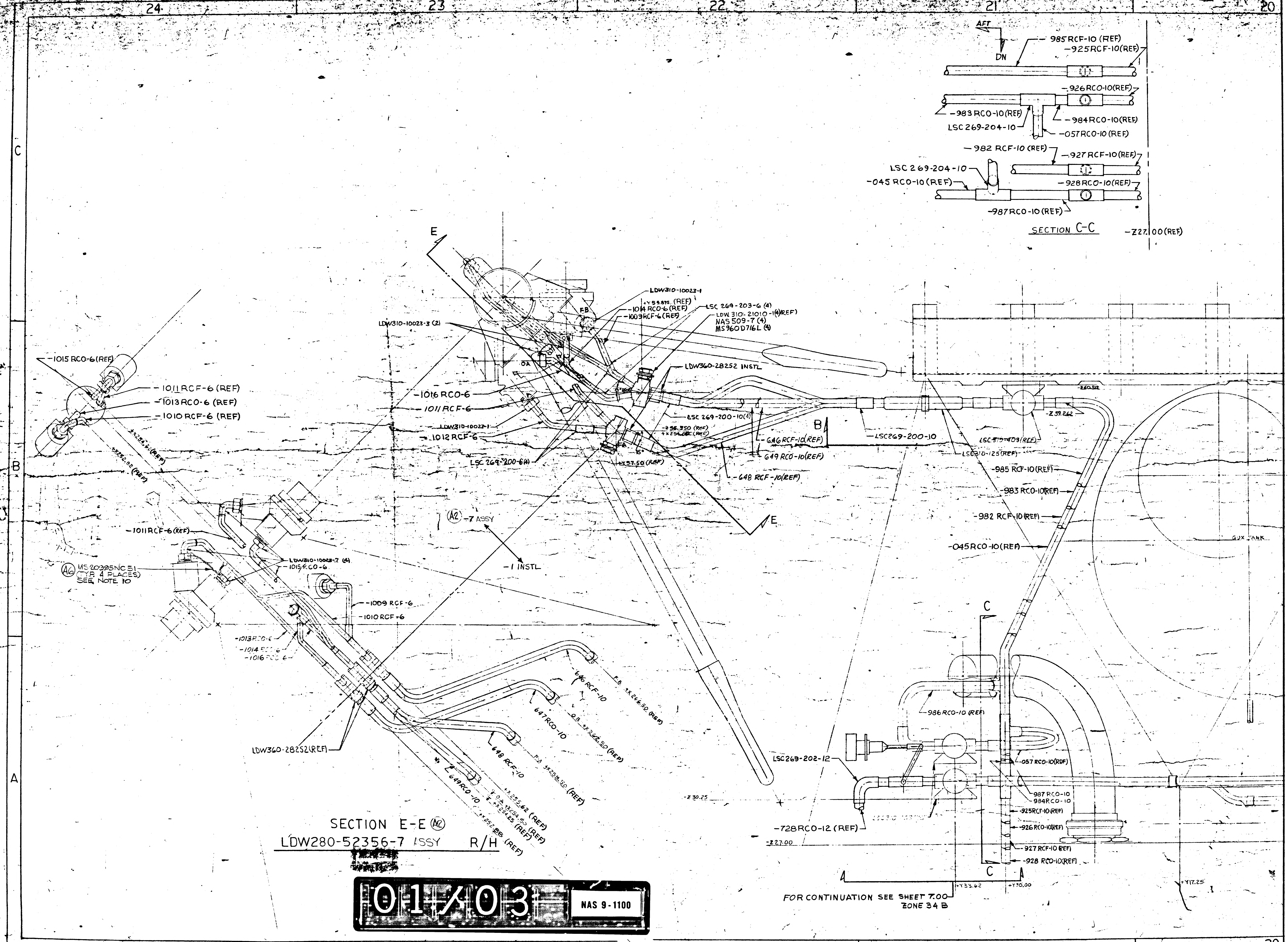
24
23
22
21
20
C
B
A
AFT
DN
-985 RCF-10 (REF)
-925 RCF-10 (REF)
-926 RCO-10 (REF)
-983 RCO-10 (REF)
-984 RCO-10 (REF)
LSC 269-204-10
-057 RCO-10 (REF)
-982 RCF-10 (REF)
-927 RCF-10 (REF)
LSC 269-204-10
-045 RCO-10 (REF)
-928 RCO-10 (REF)
-987 RCO-10 (REF)
SECTION C-C
-Z27.00 (REF)
E
LDW310-10023-1
+Y 58.875 (REF)
-1014 RCO-6 (REF)
-1009 RCF-6 (REF)
LSC 269-203-6 (4)
LDW 310-21010-1 (4) (REF)
NAS 509-7 (4)
MS960D716L (4)
FB
LDW310-10023-3 (2)
OA
-1015 RCO-6 (REF)
-1011 RCF-6 (REF)
-1013 RCO-6 (REF)
-1010 RCF-6 (REF)
LDW360-28252 INSTL
-1016 RCO-6
1011 RCF-6
LDW310-10023-1
1012 RCF-6
LSC 269-200-6 (4)
LSC 269-200-10 (4)
-Z 56.350 (REF)
+X 254.00 (REF)
FA
15°
+Y 57.50 (REF)
B
646 RCF-10 (REF)
649 RCO-10 (REF)
-648 RCF-10 (REF)
E
LSC269-200-10
LSC 310-125 (REF)
LSC 315-403 (REF)
-Z 59.262
-Z 60.512
-985 RCF-10 (REF)
-983 RCO-10 (REF)
-982 RCF-10 (REF)
-045 RCO-10 (REF)
GOX TANK
+X 254.62 (REF)
+X 252.82 (REF)
-1011 RCF-6 (REF)
(A6) MS20995NC51 (TYP. 4 PLACES) SEE NOTE 10
LDW310-10023-7 (4)
-1015 RCO-6
(A2) -7 ASSY
-1 INSTL
-1009 RCF-6
-1010 RCF-6
-1013 RCO-6
-1014 RCO-6
-1016 RCO-6
646 RCF-10
F.B +X 266.50 (REF)
647 RCO-10
O.B +X 262.50 (REF)
648 RCF-10
F.A +X 258.50 (REF)
649 RCO-10
+X 255.62 (REF)
O.A +X 254.50 (REF)
+X 254.85 (REF)
+X 252.88 (REF)
LDW360-28252 (REF)
-Z 30.25
C
986 RCO-10 (REF)
LSC269-202-12
-057 RCO-10 (REF)
987 RCO-10
984 RCO-10
-925 RCF-10 (REF)
-926 RCO-10 (REF)
-927 RCF-10 (REF)
-928 RCO-10 (REF)
-728 RCO-12 (REF)
-Z27.00
C
+Y33.62
+Y30.00
+Y17.25

SECTION E-E (A2)
LDW280-52356-7 ASSY R/H

FOR CONTINUATION SEE SHEET 7.00
ZONE 34 B

01/03 NAS 9-1100

20
19
18
17
16
985 RCF-10 (REF)
-925 RCF-10 (REF)
-926 RCO-10 (REF)
-984 RCO-10 (REF)
-057 RCO-10 (REF)
-927 RCF-10 (REF)
-928 RCO-10 (REF)
-Z27.00 (REF)
AFT
DN
-988 RCF-10 (REF)
-932 RCF-10 (REF)
-993 RCF-10 (REF)
-929 RCO-10 (REF)
-060 RCF-10 (REF)
-Z27.00 (REF)
-987 RCO-10 (REF)
-991 RCF-10 (REF)
-930 RCF-10 (REF)
-076 RCF-10 (REF)
-931 RCO-10 (REF)
-990 RCO-10 (REF)
+Y0.00
-Y33.625
-Z60.512
-Z59.262
GOX TANK
GOX TANK
He TANKS
LSC310-403 (REF)
LSC269-200-10
LSC310-125 (REF)
B
-642 RCF-10
-988 RCF-10 (REF)
-987 RCO-10 (REF)
-076 RCF-10 (REF)
-990 RCO-10 (REF)
D
-991 RCF-10 (REF)
060 RCF-10 (REF)
-996 RCO-10 (REF)
-995 RCF-10 (REF)
-992 RCF-10
-993 RCF-10
LSC269-202-12
-997 RCF-10 (REF)
-998 RCO-10 (REF)
-932 RCF-10 (REF)
-929 RCO-10 (REF)
-930 RCF-10 (REF)
-931 RCO-10 (REF)
LSC310-403 (REF)
-725 RCF-12 (REF)
D
-Y17.25
-Y17.25
-Y30.00
-Y33.62
F
F
LDW310-10023-3
A9 -1024 RCO-6 (REF)
LDW310-10023-1
-1017 RCF-6 (REF)
LSC269-203-6 (4)
-1020 RCF-6 A9
LDW310-10023-7 (2)
LDW310-10023-7 (2)
-643 RCO-10
-641 RCO-10
-1022 RCO-6
-1023 RCO-6
-1019 RCF-6 (REF)
-640 RCF-10
LDW310-10023-1
-1018 RCF-6
LDW310-10023-3
LSC269-200-6 (4)
LDW310-21010-1 (4)
NAS509-7 (4)
MS 21040L7 (4)
AN 960D716L (4)
LDW360-28252 (REF)
LSC269-200-10 (4)
A2
-5 ASSY
-1 INSTL
A7 A9
-1020 RCF-6
-1017 RCF-6
-640 RCF-10 (REF)
641 RCO-10 (REF)
-642 RCF-10 (REF)
-643 RCO-10 (REF)

SECTION C-C

SECTION D-D

VIEW A-A
LDW280-52356-1 INSTL.
VIEW LOOKING DOWN
+X280.00

FOR CONTINUATION SEE SHEET 7.00 ZONE 26 B

SECTION F-F
LDW280-52356-5

02/03

NAS 9-1100

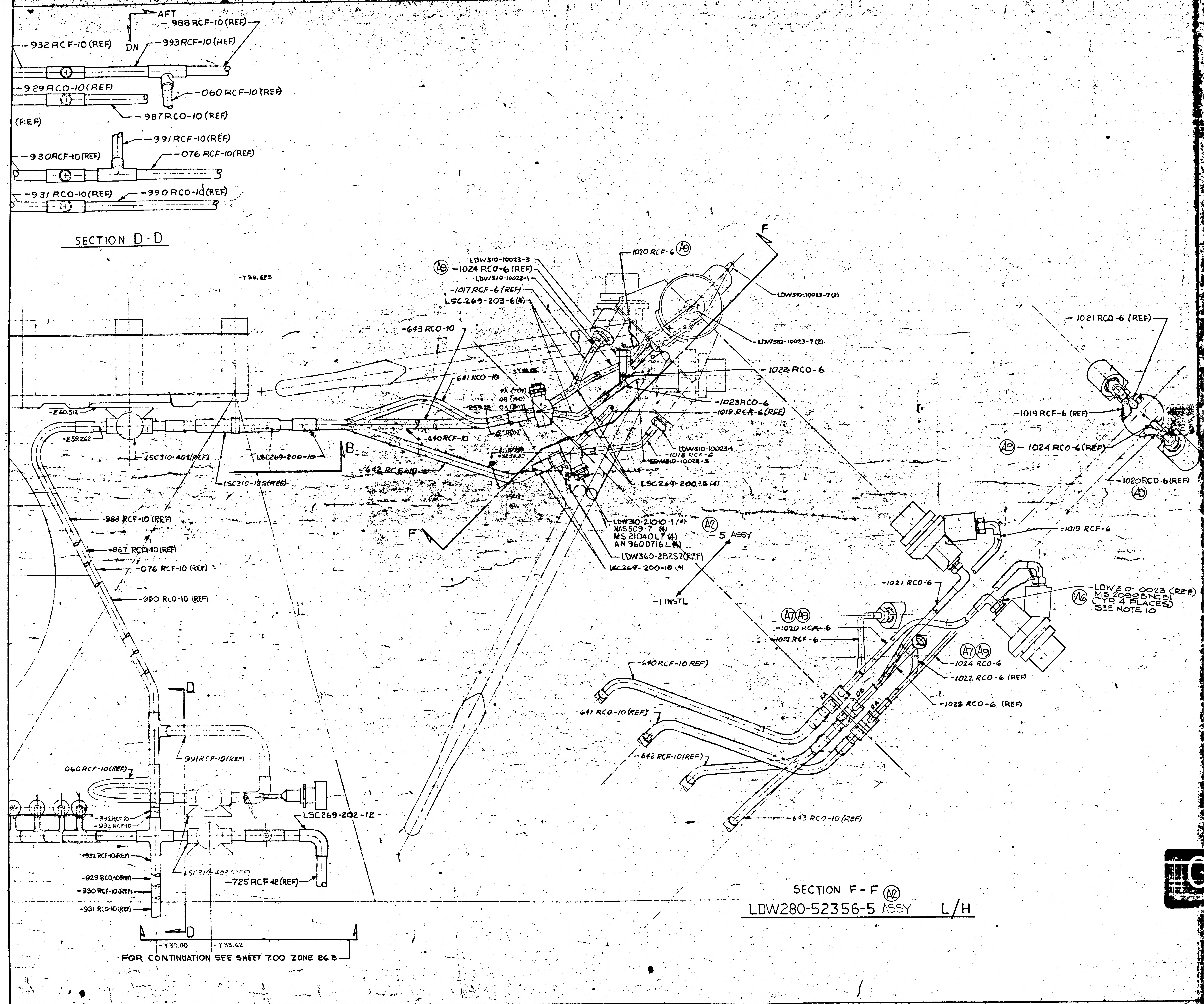

18
17
16
15
AFT
DN
-988 RCF-10 (REF)
-932 RCF-10 (REF)
-993 RCF-10 (REF)
-929 RCO-10 (REF)
-060 RCF-10 (REF)
-987 RCO-10 (REF)
(REF)
-991 RCF-10 (REF)
-930 RCF-10 (REF)
-076 RCF-10 (REF)
-931 RCO-10 (REF)
-990 RCO-10 (REF)
F
-Y35.625
LDW310-10023-3
(A9) -1024 RCO-6 (REF)
LDW310-10023-1
-1017 RCF-6 (REF)
LSC269-203-6 (4)
-1020 RCF-6 (A9)
LDW310-10023-7 (2)
-643 RCO-10
LDW310-10023-7 (2)
-1022 RCO-6
641 RCO-10
FA (TOP)
OB (MID)
OA (BOT)
-1023 RCO-6
-1019 RCF-6 (REF)
-Z60.512
-Z59.262
640 RCF-10
LDW310-10023-1
-1018 RCF-6
LDW310-10023-3
LSC310-403 (REF)
LSC269-200-10
B
-642 RCF-10
LSC310-125 (REF)
LSC269-200-6 (4)
-988 RCF-10 (REF)
-987 RCO-10 (REF)
-076 RCF-10 (REF)
-990 RCO-10 (REF)
LDW310-21010-1 (4)
NAS509-7 (4)
MS 21040L7 (4)
AN 960D716L (4)
LDW360-28252 (REF)
LSC269-200-10 (4)
F
(A2) -5 ASSY
-1 INSTL
-1021 RCO-6 (REF)
-1019 RCF-6 (REF)
(A9) -1024 RCO-6 (REF)
-1020 RCO-6 (REF)
(A9)
-1019 RCF-6
-1021 RCO-6
LDW310-10023 (REF)
MS 20995NC51
(A6) (TYP. 4 PLACES)
SEE NOTE 10
(A7)(A9) -1020 RCF-6
-1017 RCF-6
(A7)(A9) -1024 RCO-6
-1022 RCO-6 (REF)
-1028 RCO-6 (REF)
-640 RCF-10 (REF)
641 RCO-10 (REF)
642 RCF-10 (REF)
-643 RCO-10 (REF)
D
991 RCF-10 (REF)
060 RCF-10 (REF)
LSC269-202-12
-932 RCF-10
-993 RCF-10
-932 RCF-10 (REF)
-929 RCO-10 (REF)
-930 RCF-10 (REF)
-931 RCO-10 (REF)
LSC310-403 (REF)
-725 RCF-12 (REF)
D
-Y30.00
-Y33.42

SECTION D-D

SECTION F-F (A2)

LDW280-52356-5 ASSY L/H

FOR CONTINUATION SEE SHEET 7.00 ZONE 26 B

14

MANUFACTURING OPERATIONS

UNLESS OTHERWISE SPECIFIED
NOTES CHECKED √ APPLY TO THIS DWG.

PART NUMBER AND ALL OTHER MARKINGS IN REGION MARKED ⊠ USE BOTH SIDES IF NECESSARY.

FILLET AND INSIDE CORNER RADII TOLERANCES
.016R TO .062R ± .010
.063R TO .250R ± .015
OVER .250R ± .030

DEPTH SHOWN FOR TAPPED HOLES IS FULL THDS. 2-3 IMP THDS. BEYOND PERMISSIBLE.

EXTERNAL THREAD LENGTH SHOWN INCLUDES 2 IMPERFECT THREADS MAX.

DO NOT CADMIUM PLATE & PAINT HOLES OR SURFACES MARKED WITH DOUBLE ASTERISK.

MISMATCH STEP OF ± .005 PERMISSIBLE DUE TO CHANGE OF CUTTERS AT INSIDE INTERSECTING SURFACES.

DIAMETERS MARKED MUST BE CONCENTRIC WITHIN FULL INDICATOR READING

HOLES MUST BE KEPT FREE OF CHROME PLATING SOLUTION.

ALL DIMENSIONS SHOWN TO BE MET AFTER CADMIUM PLATING. THICKNESS OF PLATE .0003 MIN. TO .0005 MAX. MIN. THICKNESS TO BE .0002 ON THREADED AREAS. NO ALLOWANCE FOR PLATING IN HOLES

125 √ SURFACE ROUGHNESS INCLUDING REAMED HOLES PER MIL-STD-10

200 √ FOR ALL DRILLED HOLES

REMOVE ALL BURRS. BREAK ALL EDGES .015-.031

INSPECTION INFORMATION MINIMUM PERMISSIBLE AVERAGE EDGE DISTANCE MARKED IS

SYMBOL √ DENOTES SURFACE TO BE MACHINED

UNLESS OTHERWISE SPECIFIED TOLERANCE ON FLANGES IS ± 1/32

LENGTHS OF AN, NAS & MS AL ALY RIVETS SHORTER THAN 1 INCH ARE NOT SPECIFIED.

TOLERANCE ON LOFTED DELINEATIONS IS

DWG SIZE 34 X

03/03

NAS 9-1100

THIS IS AN ORIGINAL DRAWING

GRUMMAN AIRCRAFT ENGRG CORP., BETHPAGE, L. I., NEW YORK

LEM-2(32)	SIZE J	CODE IDENT NO. 26512	LDW 280-52356	A
MODEL OR END ITEM	SCALE HALF		SHEET 6.20	

14

THIS IS AN ORIGINAL DRAWING

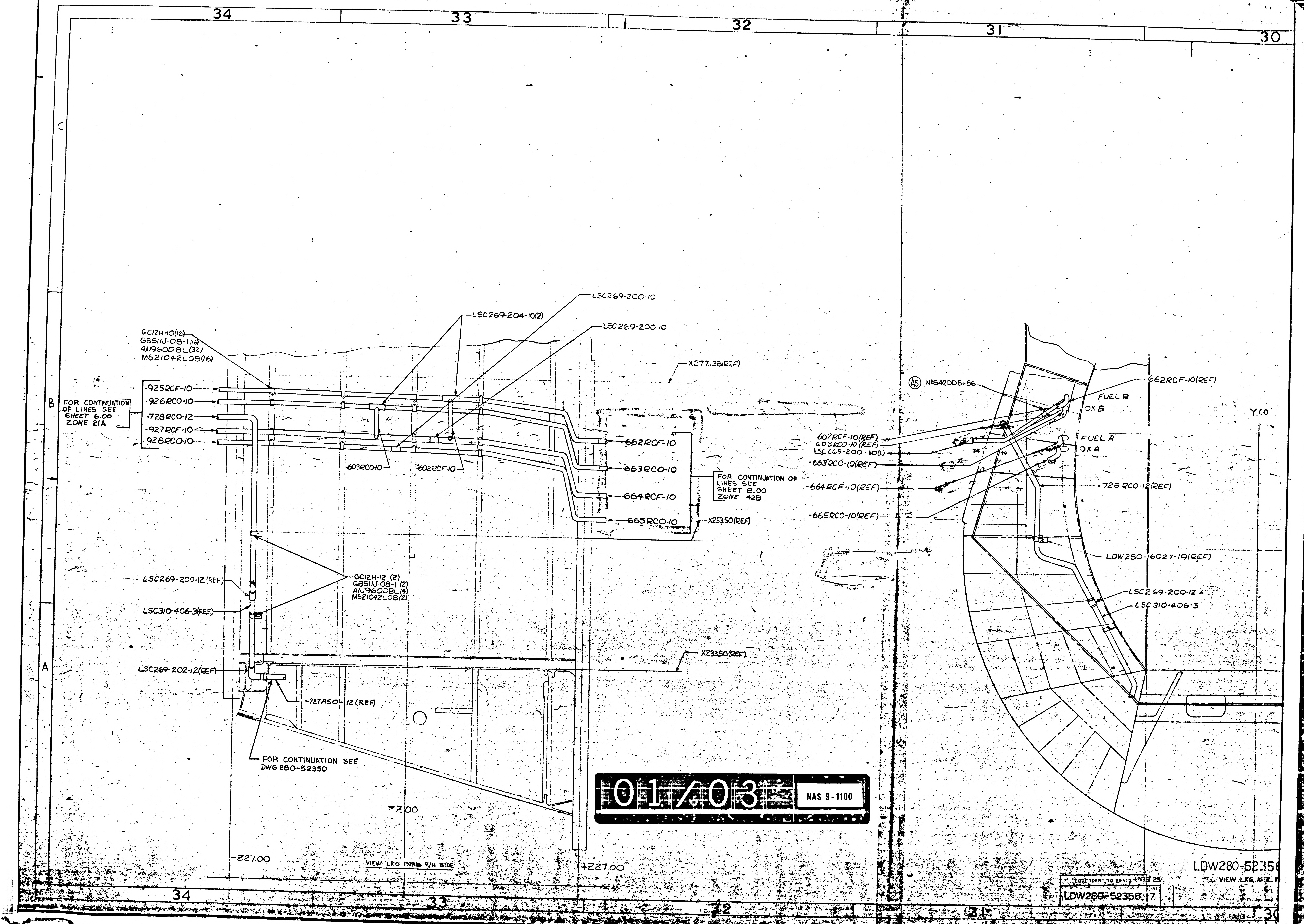
34
33
32
31
30
C
B
A
FOR CONTINUATION OF LINES SEE SHEET 6.00 ZONE 21A
-925RCF-10
-926RCO-10
-728RCO-12
-927RCF-10
-928RCO-10
GC12H-10(16)
GB511J-08-1(16)
AN960D8L(32)
MS21042L08(16)
LSC269-204-10(2)
LSC269-200-10
LSC269-200-10
X277.13B(REF)
603RCO-10
602RCF-10
662RCF-10
663RCO-10
664RCF-10
665RCO-10
FOR CONTINUATION OF LINES SEE SHEET 8.00 ZONE 42B
X253.50(REF)
GC12H-12 (2)
GB511J-08-1 (2)
AN960D8L (4)
MS21042L08(2)
LSC269-200-12(REF)
LSC310-406-3(REF)
LSC269-202-12(REF)
X233.50(REF)
-727ASO-12 (REF)
FOR CONTINUATION SEE DWG 280-52350
Z.00
Z27.00
VIEW LKG INBD R/H SIDE
+Z27.00
A5 NAS42DD5-56
-662RCF-10(REF)
FUEL B
OX B
FUEL A
OX A
Y.0
602RCF-10(REF)
603RCO-10 (REF)
LSC269-200-10(2)
-663RCO-10(REF)
-664RCF-10(REF)
-665RCO-10(REF)
-728 RCO-12(REF)
LDW280-16027-19(REF)
LSC269-200-12
LSC310-406-3
LDW280-5235
VIEW LKG AFT

01/03 NAS 9-1100

CODE IDENT NO 28512 | 447.25
LDW280-52356 | SHEET 7

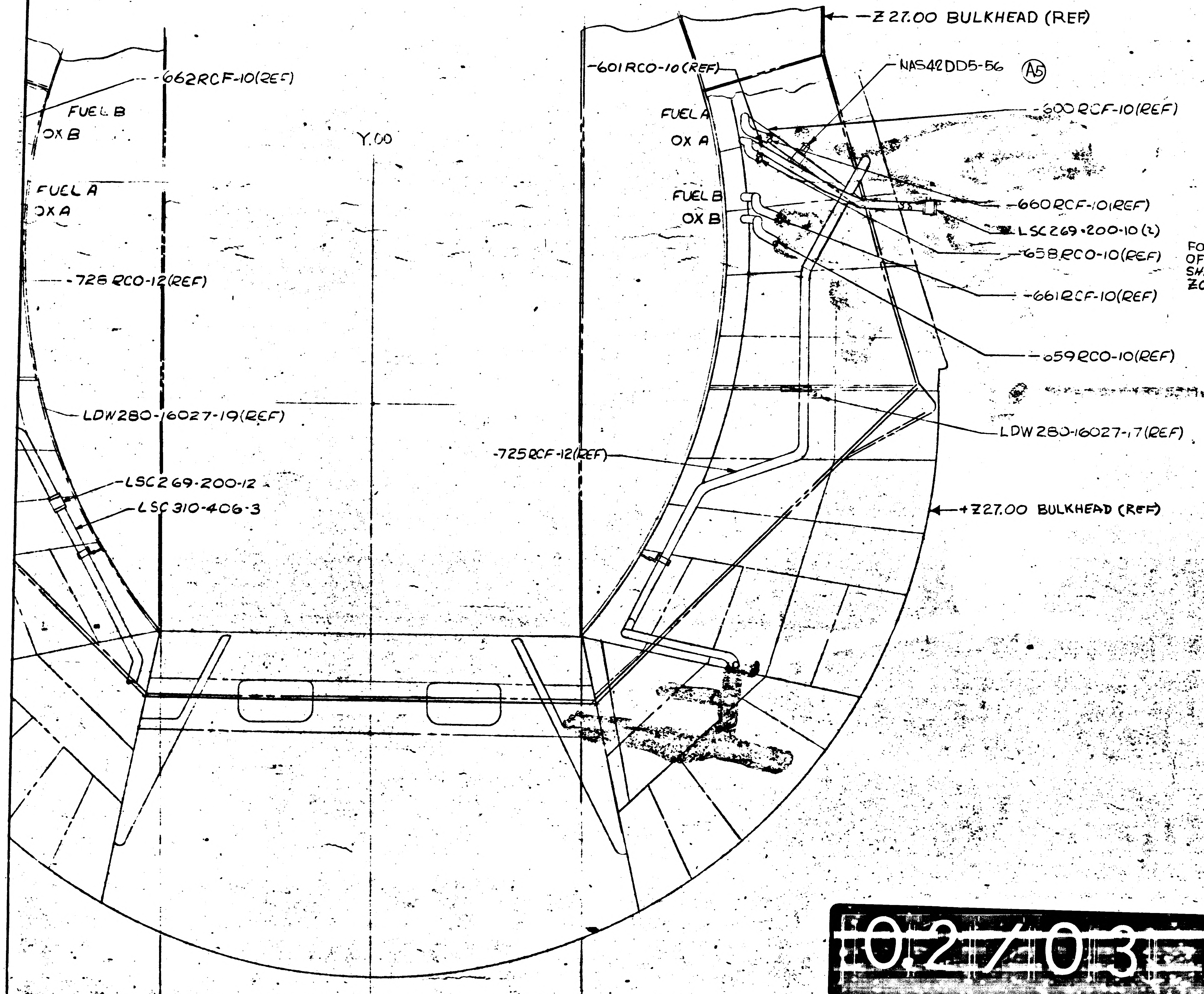
-Z27.00 BULKHEAD (REF)
-601RCO-10(REF)
NAS42DD5-56 Ⓐ5
-662RCF-10(REF)
-600RCF-10(REF)
FUEL B
OX B
Y.00
FUEL A
OX A
FUEL A
OX A
FUEL B
OX B
-660RCF-10(REF)
LSC269-200-10 (2)
-658RCO-10(REF)
-726RCO-12(REF)
-661RCF-10(REF)
-659RCO-10(REF)
LDW280-16027-19(REF)
LDW280-16027-17(REF)
-725RCF-12(REF)
LSC269-200-12
LSC310-406-3
+Z27.00 BULKHEAD (REF)
+Y17.25
-Y17.25

LDW280-52356-1 INSTL

VIEW LKG AFT. FROM +Z27.00

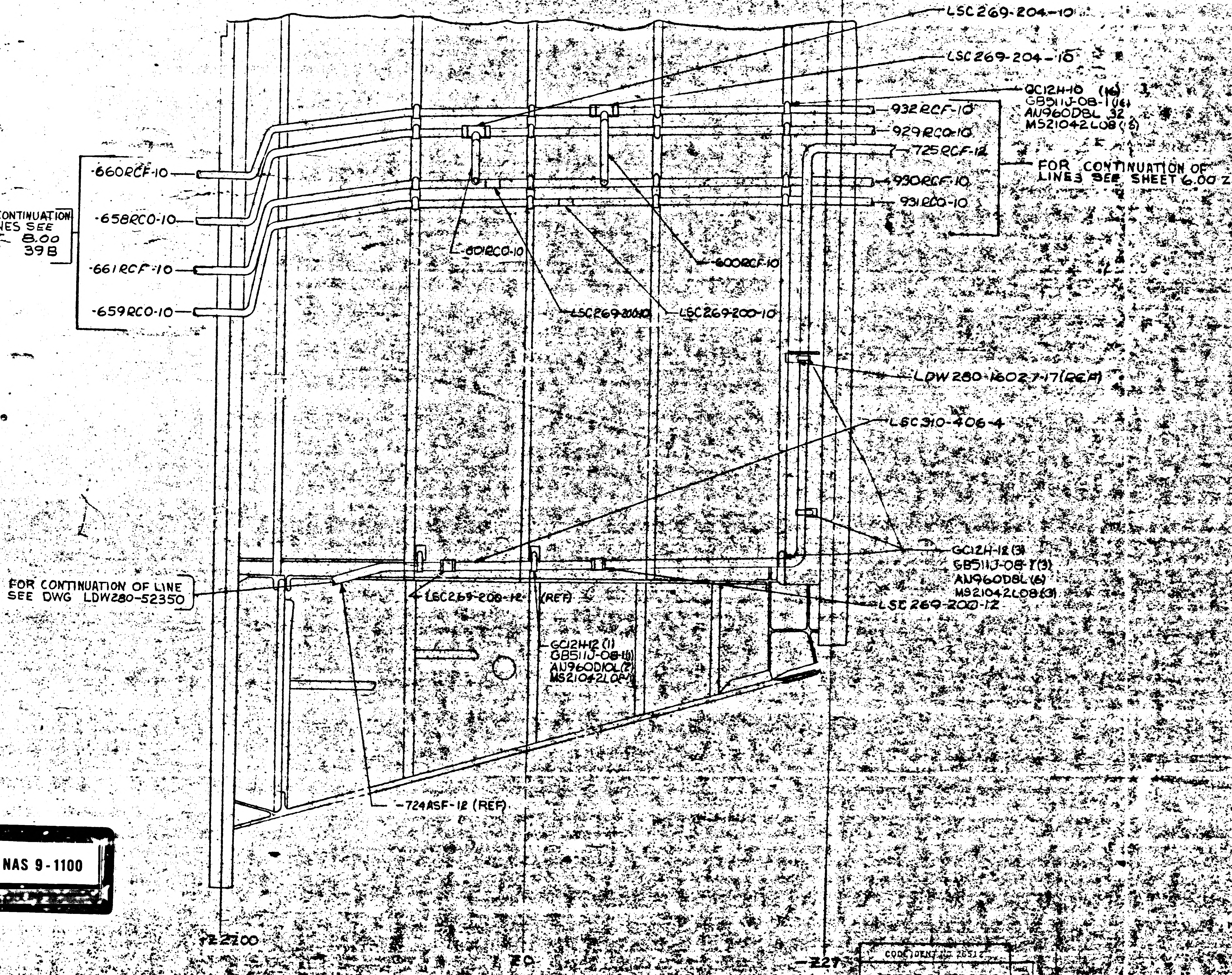
FOR CONTINUATION OF LINES SEE SHEET 8.00 ZONE 39B
-660RCF-10
-658RCO-10
-661RCF-10
-659RCO-10
LSC269-204-10
LSC269-204-10
GC12H-10 (16)
GB511J-08-1 (16)
AN960D8L 32
MS21042L08 (8)
932RCF-10
929RCO-10
725RCF-12
930RCF-10
931RCO-10
FOR CONTINUATION OF LINES SEE SHEET 6.00 Z
-601RCO-10
600RCF-10
LSC269-200-10
LSC269-200-10
LDW280-16027-17(REF)
LSC310-406-4
GC12H-12 (3)
GB511J-08-1 (3)
AN960D8L (6)
MS21042L08 (3)
LSC269-200-12
FOR CONTINUATION OF LINE SEE DWG LDW280-52350
LSC269-200-12 (REF)
GC12H12 (1)
GB511J-08-1 (1)
AN960D10L (2)
MS21042L08 (1)
-724ASF-12 (REF)
Z22.00
Z0
-Z27

VIEW LKG INBD LA SIDE

02/03

NAS 9-1100

CODE IDENT NO 26512

LDW280-52356 SHEET 7

CODE IDENT NO 26512

LDW280-52356

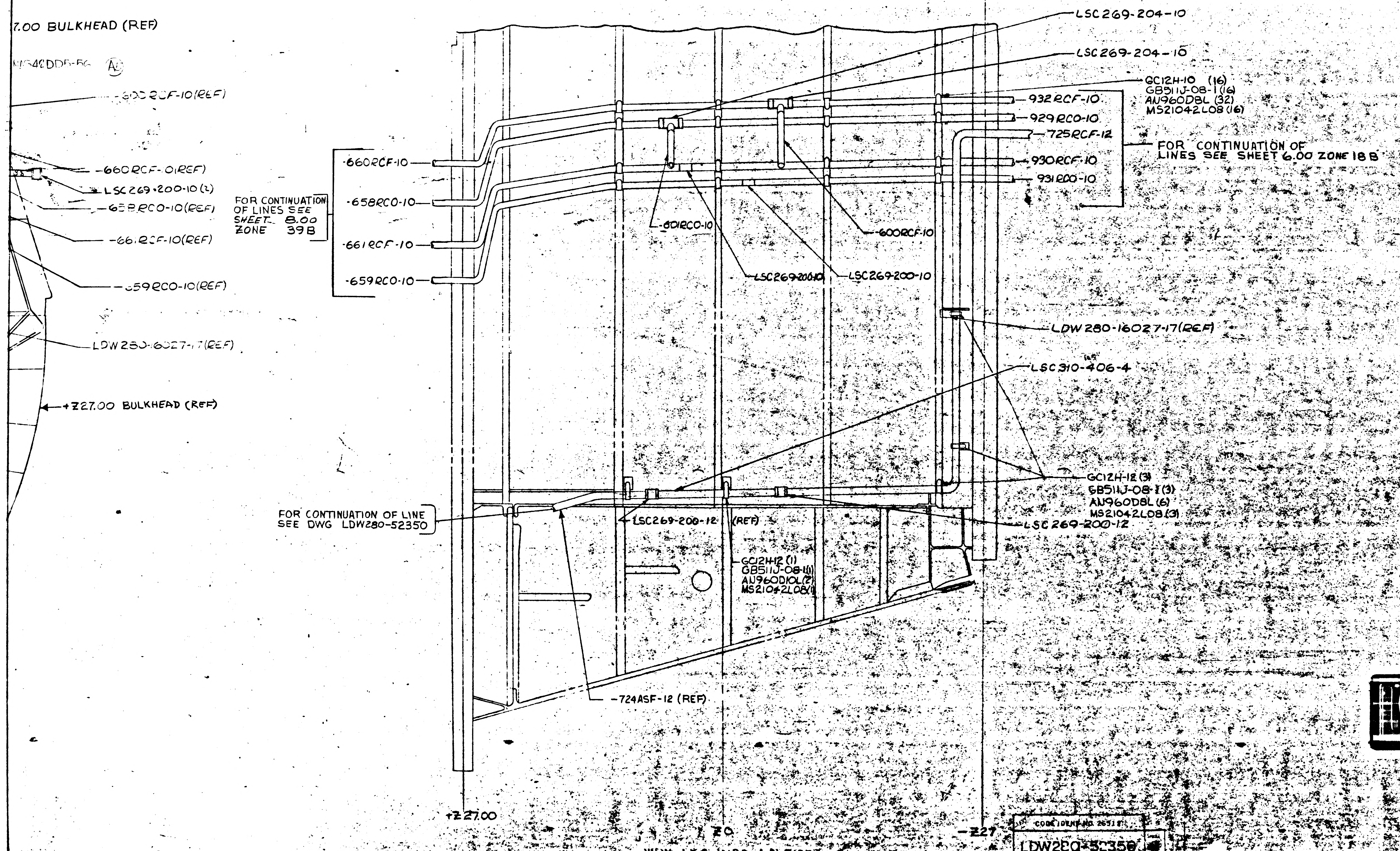
7.00 BULKHEAD (REF)
MS42DD5-56 (A)
-600 RCF-10 (REF)
-660 RCF-01 (REF)
LSC269-200-10 (2)
-658 RCO-10 (REF)
-661 RCF-10 (REF)
-659 RCO-10 (REF)
LDW280-16027-17 (REF)
+Z27.00 BULKHEAD (REF)
FOR CONTINUATION OF LINES SEE SHEET 8.00 ZONE 39B
-660 RCF-10
-658 RCO-10
-661 RCF-10
-659 RCO-10
LSC269-204-10
LSC269-204-10
GC12H-10 (16)
GB511J-08-1 (16)
AN960DBL (32)
MS21042L08 (16)
-932 RCF-10
-929 RCO-10
-725 RCF-12
-930 RCF-10
-931 RCO-10
FOR CONTINUATION OF LINES SEE SHEET 6.00 ZONE 18B
-601 RCO-10
-600 RCF-10
LSC269-200-10
LSC269-200-10
LDW280-16027-17 (REF)
LSC310-406-4
GC12H-12 (3)
GB511J-08-1 (3)
AN960DBL (6)
MS21042L08 (3)
FOR CONTINUATION OF LINE SEE DWG LDW280-52350
LSC269-200-12
(REF)
LSC269-200-12
GC12H-12 (1)
GB511J-08-1 (1)
AN960D10L (2)
MS21042L08 (1)
-724 ASF-12 (REF)
+Z27.00
Z0
-Z27
VIEW LKG INBD LH SIDE

MANUFACTURING OPERATIONS
UNLESS OTHERWISE SPECIFIED
NOTES CHECKED √ APPLY TO THIS DWG.

PART NUMBER AND ALL OTHER MARKINGS IN REGION MARKED ⊠ USE BOTH SIDES IF NECESSARY.

FILLET AND INSIDE CORNER RADII TOLERANCES
.016R TO .062R ± .010
.063R TO .250R ± .015
OVER .250R ± .030

DEPTH SHOWN FOR TAPPED HOLES IS FULL THDS. 2-3 IMP THDS. BEYOND PERMISSIBLE.

EXTERNAL THREAD LENGTH SHOWN INCLUDES 2 IMPERFECT THREADS MAX.

DO NOT CADMIUM PLATE & PAINT HOLES OR SURFACES MARKED WITH DOUBLE ASTERISK.

MISMATCH STEP OF ± .005 PERMISSIBLE DUE TO CHANGE OF CUTTERS AT INSIDE INTERSECTING SURFACES.

DIAMETERS MARKED MUST BE CONCENTRIC WITHIN FULL INDICATOR READING

HOLES MUST BE KEPT FREE OF CHROME PLATING SOLUTION.

ALL DIMENSIONS SHOWN TO BE MET AFTER CADMIUM PLATING. THICKNESS OF PLATE .0003 MIN. TO .0005 MAX. MIN. THICKNESS TO BE .0002 ON THREADED AREAS. NO ALLOWANCE FOR PLATING IN HOLES

125 √ SURFACE ROUGHNESS INCLUDING REAMED HOLES PER MIL-STD-10

250 √ FOR ALL DRILLED HOLES

REMOVE ALL BURRS. BREAK ALL EDGES .015-.031

INSPECTION INFORMATION MINIMUM PERMISSIBLE AVERAGE EDGE DISTANCE MARKED IS

SYMBOL √ DENOTES SURFACE TO BE MACHINED

UNLESS OTHERWISE SPECIFIED TOLERANCE ON FLANGES IS ± 1/32

LENGTHS OF AN, NAS & MS AL ALY RIVETS SHORTER THAN 1 INCH ARE NOT SPECIFIED.

TOLERANCE ON LOFTED DELINEATIONS IS

DWG SIZE 34 X 105 = 24.65 sq. FT.

PRINTING INFO ONLY
FULL SIZE SHEET AREA (36 X 114)= 28.4 SQ. FT.
1/2 SIZE SHEET AREA (1/4 OF FULL)= 7.1 SQ. FT.

PRINT TRIM LINE

LDW280-52356A

LDW280-52356A

03/03

NAS 9-1100

THIS IS AN ORIGINAL DRAWING

CODE IDENT NO 26512
LDW280-52356

	GRUMMAN AIRCRAFT ENGRG CORP., BETHPAGE, L. I., NEW YORK			
LEM-2(32)	SIZE J	CODE IDENT NO. 26512	LDW280-52356	A
ASSBL OR END ITEM	SCALE 1/4		SHEET 7.00	

THIS IS AN ORIGINAL DWG

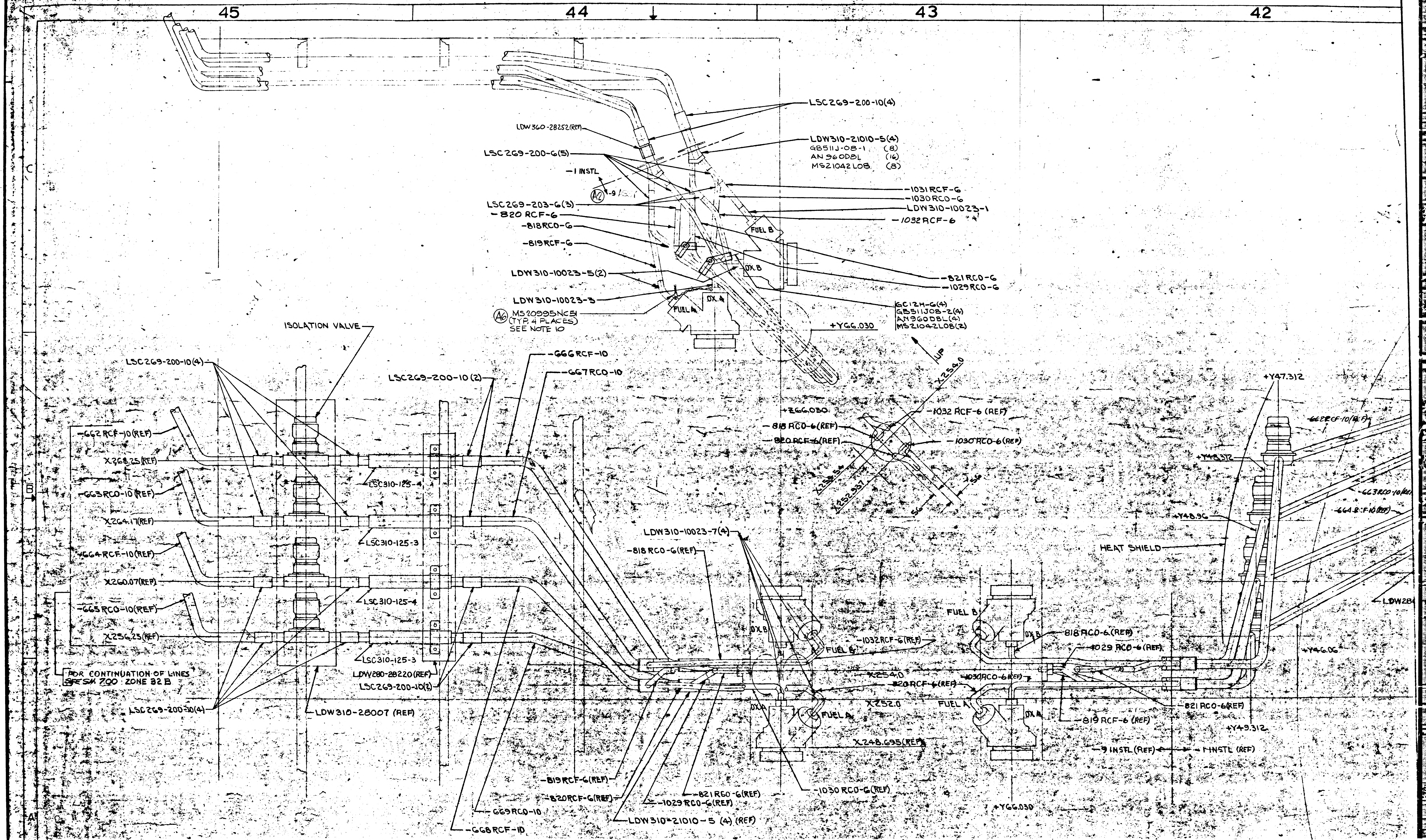
45
44
43
42
LSC269-200-10(4)
LDW360-28252(REF)
LDW310-21010-5(4)
GB511J-08-1 (8)
AN960D8L (16)
MS21042L08 (8)
LSC269-200-6(5)
-1 INSTL
A2 -9
-1031 RCF-6
-1030 RCO-6
LSC269-203-6(3)
-820 RCF-6
LDW310-10023-1
-1032 RCF-6
-818 RCO-6
FUEL B
-819 RCF-6
OX B
LDW310-10023-5(2)
-821 RCO-6
-1029 RCO-6
LDW310-10023-3
FUEL A
OX A
GC12H-6(4)
GB511J08-2(4)
AN960D8L(4)
MS21042L08(2)
A6 MS20995NC51 (TYP. 4 PLACES) SEE NOTE 10
+Y66.030
UP
ISOLATION VALVE
LSC269-200-10(4)
LSC269-200-10(2)
-666 RCF-10
-667 RCO-10
X254.0
+Z66.030
-1032 RCF-6 (REF)
-818 RCO-6(REF)
-820 RCF-6(REF)
-1030 RCO-6(REF)
-662 RCF-10(REF)
X268.25(REF)
LSC310-125-4
-663 RCO-10(REF)
X264.17(REF)
LSC310-125-3
-664 RCF-10(REF)
X260.07(REF)
LSC310-125-4
-665 RCO-10(REF)
X256.25(REF)
LSC310-125-3
LDW280-28220(REF)
LSC269-200-10(2)
FOR CONTINUATION OF LINES SEE SH 700 ZONE 82 B
LSC269-200-10(4)
LDW310-28007 (REF)
LDW310-10023-7(4)
-818 RCO-6(REF)
FUEL B
OX B
FUEL B
-1032 RCF-6(REF)
818 RCO-6(REF)
-1029 RCO-6(REF)
X254.0
-820 RCF-6(REF)
-1030 RCO-6(REF)
X252.0
FUEL A
OX A
FUEL A
OX A
-821 RCO-6(REF)
-819 RCF-6 (REF)
X248.695(REF)
-9 INSTL (REF)
-1 INSTL (REF)
+Y49.312
+Y46.06
+Y47.312
+Y48.312
+Y48.96
-662 RCF-10(REF)
-663 RCO-10(REF)
-664 RCF-10(REF)
HEAT SHIELD
LDW28
-819 RCF-6(REF)
-820 RCF-6(REF)
-821 RCO-6(REF)
-1029 RCO-6(REF)
-1030 RCO-6(REF)
LDW310-21010-5 (4) (REF)
-669 RCO-10
-668 RCF-10
+Y66.030
A
B
C

LDW280-52356-9 A2
VIEW LOOKING INBOARD
RIGHT HAND

01/03

NAS 9-1100

LDW280-52356 8

42
41
40
39
38
LDW3
MS2
(TYP
SEE
+Y47.312
-662RCF-10(REF)
+Y48.312
-663RCO-10(REF)
-664RCF-10(REF)
GC12H-10 (4)
GB511J-08-1 (4)
AN960D8L (8)
MS21042L08 (4)
-665RCO-10(REF)
.165-.171 RCS-19 HOLE(4) DRILL ON INSTL
11/32 (TYP)
+X257.390 (REF)
+Y37.560 (REF)
LDW280-28293-2 (REF)
+Y46.06
-821RCO-6(REF)
+Y49.312
-1 INSTL (REF)
GC12H-10 (4)
GB511J-08-1 (4)
AN960D8L(8)
MS21042L08(4)
-Y47.312
-660RCF-10(REF)
-658RCO-10 (REF)
-Y48.312
-661RCF-10 (REF)
-Y48.96
-659RCO-10 (REF)
11/32 (TYP)
+X257.390 (REF)
-Y37.560(REF)
LDW280-28293-1 (REF)
.165-.171 RCS-19 HOLE (4) DRILL ON INSTL
HEAT SHIELD
-1027RCO-
-82
-825RCO-6(REF)
-822RCO-6(REF)
-823RCF-6(REF)
-1025RCF-6(REF)
OX A
OX B
-Y46.06
-Y49.312
-1027RCO-6 (REF)
-1026RCO-6(REF)
-1-INSTL(REF)
-3 INSTL (REF)
-YGG.030
VIEW LOOKING AFT

CODE IDENT NO. 26512
LDW280-55835 8

CODE IDENT NO. 26512
LDW280-52356 8

02/03 NAS 9-1100

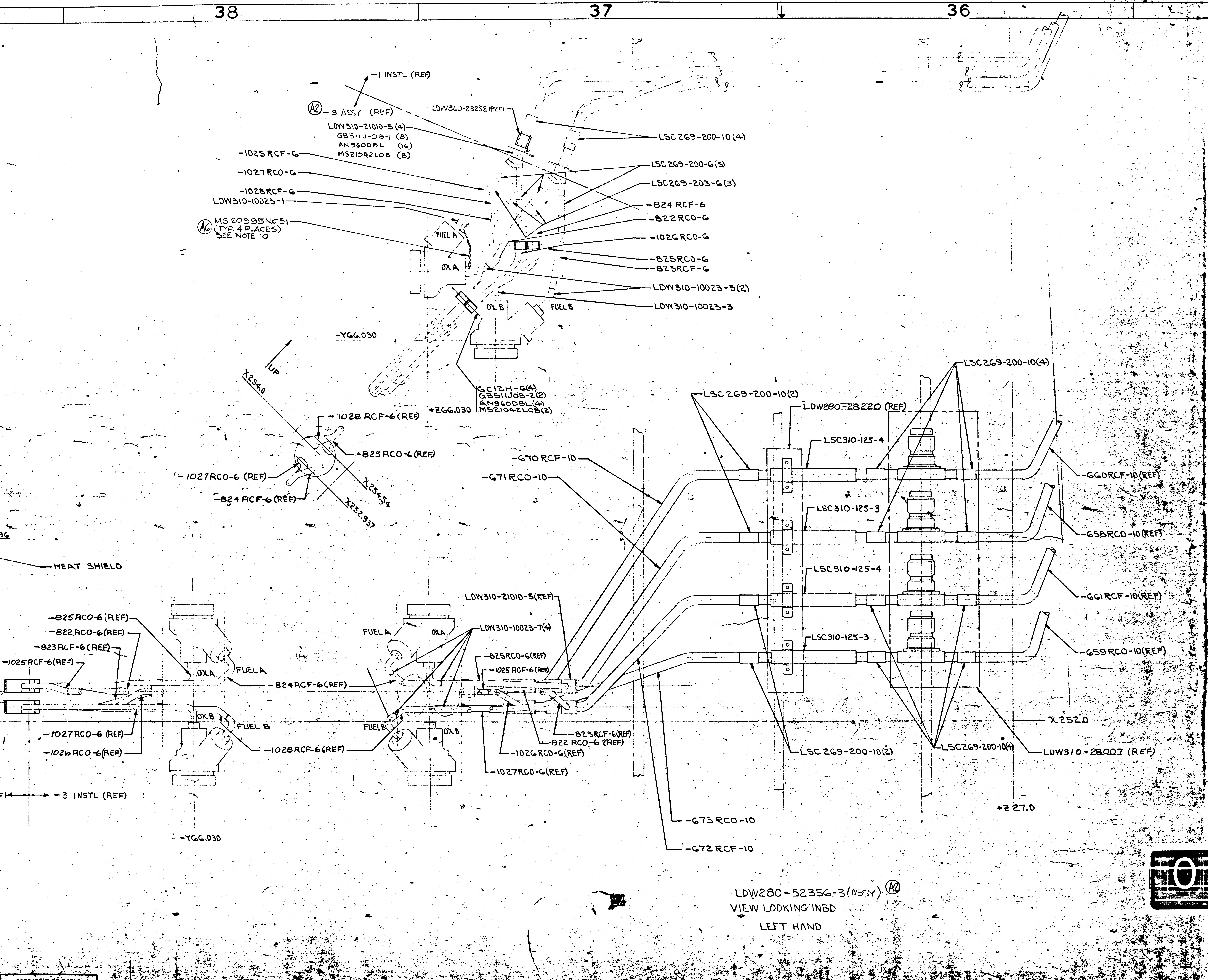
38
37
36
35
-1 INSTL (REF)
A2 -3 ASSY (REF)
LDW360-28252 (REF)
LDW310-21010-5 (4)
GB511J-08-1 (8)
AN960D8L (16)
MS21042L08 (8)
LSC269-200-10(4)
-1025 RCF-6
-1027 RCO-6
-1028 RCF-6
LDW310-10023-1
LSC269-200-6(5)
LSC269-203-6(3)
-824 RCF-6
-822 RCO-6
-1026 RCO-6
A6 MS20995NC51 (TYP. 4 PLACES) SEE NOTE 10
FUEL A
OX A
-825 RCO-6
-823 RCF-6
LDW310-10023-5(2)
LDW310-10023-3
OX B
FUEL B
-Y66.030
UP
X254.0
GC12H-6(4)
GB511J08-2(2)
AN960D8L(4)
MS21042L08(2)
+Z66.030
-1028 RCF-6(REF)
-825 RCO-6 (REF)
-1027 RCO-6 (REF)
-824 RCF-6 (REF)
X254.454
X252.937
LSC269-200-10(4)
LSC269-200-10(2)
LDW280-28220 (REF)
LSC310-125-4
LSC310-125-3
LSC310-125-4
LSC310-125-3
-670 RCF-10
-671 RCO-10
-660 RCF-10(REF)
-658 RCO-10(REF)
-661 RCF-10(REF)
-659 RCO-10(REF)
HEAT SHIELD
-825 RCO-6(REF)
-822 RCO-6(REF)
-823 RCF-6(REF)
-1025 RCF-6(REF)
OXA
FUEL A
-824 RCF-6(REF)
LDW310-21010-5(REF)
LDW310-10023-7(4)
FUEL A
OXA
-825 RCO-6(REF)
-1025 RCF-6(REF)
OX B
FUEL B
-1027 RCO-6 (REF)
-1026 RCO-6(REF)
-1028 RCF-6(REF)
FUEL B
OX B
-823 RCF-6(REF)
-822 RCO-6 (REF)
-1026 RCO-6(REF)
-1027 RCO-6(REF)
X252.0
LSC269-200-10(2)
LSC269-200-10(4)
LDW310-28007 (REF)
-3 INSTL (REF)
-Y66.030
+Z27.0
-673 RCO-10
-672 RCF-10

LDW280-52356-3 (ASSY) A2
VIEW LOOKING INBD
LEFT HAND

MANUFACTURING OPERATIONS UNLESS OTHERWISE SPECIFIED NOTES CHECKED √ APPLY TO THIS DWG.	
PART NUMBER AND ALL OTHER MARKINGS IN REGION MARKED ▭ USE BOTH SIDES IF NECESSARY.	
FILLET AND INSIDE CORNER RADII TOLERANCES .016R TO .062R ± .010 .063R TO .250R ± .015 OVER .250R ± .030	
DEPTH SHOWN FOR TAPPED HOLES IS FULL THDS. 2-3 IMP THDS. BEYOND PERMISSIBLE.	
EXTERNAL THREAD LENGTH SHOWN INCLUDES 2 IMPERFECT THREADS MAX.	
DO NOT CADMIUM PLATE & PAINT HOLES OR SURFACES MARKED WITH DOUBLE ASTERISK.	
MISMATCH STEP OF ± .005 PERMISSIBLE DUE TO CHANGE OF CUTTERS AT INSIDE INTERSECTING SURFACES.	
DIAMETERS MARKED MUST BE CONCENTRIC WITHIN FULL INDICATOR READING	
HOLES MUST BE KEPT FREE OF CHROME PLATING SOLUTION.	
ALL DIMENSIONS SHOWN TO BE MET AFTER CADMIUM PLATING. THICKNESS OF PLATE .0003 MIN. TO .0005 MAX. MIN. THICKNESS TO BE .0002 ON THREADED AREAS. NO ALLOWANCE FOR PLATING IN HOLES	
125 SURFACE ROUGHNESS INCLUDING REAMED HOLES PER MIL-STD-10	
200 FOR ALL DRILLED HOLES	
REMOVE ALL BURRS. BREAK ALL EDGES .015-.031	
INSPECTION INFORMATION MINIMUM PERMISSIBLE AVERAGE EDGE DISTANCE MARKED IS	
SYMBOL √ DENOTES SURFACE TO BE MACHINED	
UNLESS OTHERWISE SPECIFIED TOLERANCE ON FLANGES IS ± 1/32	
LENGTHS OF AN, NAS & MS AL ALY RIVETS SHORTER THAN 1 INCH ARE NOT SPECIFIED.	
TOLERANCE ON LOFTED DELINEATIONS IS	

DWG SIZE 34 X
PRINTING INFO ONLY
FULL SIZE SHEET AREA (36 X 143)= 35.6 SQ. FT.
1/2 SIZE SHEET AREA (1/4 OF FULL)= 8.9 SQ. FT.
PRINT TRIM LINE
C
B

LDW280-52356 A
LDW280-52356 A

031/031 NAS 9-1100

THIS IS AN ORIGINAL DRAWING

	GRUMMAN AIRCRAFT ENGRG CORP., BETHPAGE, L. I., NEW YORK			
LEM-2 (32)	SIZE J	CODE IDENT NO. 26512	LDW280-52356	A
MODEL OR END ITEM	SCALE 1/2		SHEET 8.00	

A

CODE IDENT NO. 26512		SHEET
LDW280-52356		8

THIS IS AN ORIGINAL DWG

CL		-9	-7	-5	-3	-1	CODE IDENT	PART NO.	I&T	NOMENCLATURE OR DESCRIPTION	MATERIAL	GOVT SPEC	COML SPEC	STOCK SIZE	PROCESS SYM	FINISH NO.	ZONE
								LDW280-16000	E								
M						1		-932 RCF-10		TUBE	SEE DWG						
						1		-931 RCO-10									
						1		-930-RCF-10									
						1		-929 RCO-10									
						1		-928 RCO-10									
						1		-927 RCF-10									
						1		-926 RCO-10									
						1		-925 RCF-10									
					1			-825 RCO-6									
					1			-824 RCF-6									
					1			-823 RCF-6									
					1			-822 RCO-6									
		1						-821 RCO-6									
		1						-820 RCF-6									
		1						-819 RCF-6									
		1						-818 RCO-6									
						1		-728 RCO-12									
						1		-725 RCF-12									
						1		-673 RCO-10									
						1		-672 RCF-10									
						1		-671 RCO-10									
						1		-670 RCF-10									
						1		-669 RCO-10									
						1		-668 RCF-10									
						1		-667 RCO-10									
						1		-666 RCF-10									
						1		-665 RCO-10									
M						1		-664 RCF-10									
								LDW280-16000	E	TUBE	SEE DWG						

QTY PER ASSEMBLY

SYM OR NO.	PROCESS OR FINISH	GRUMMAN SPEC OR MILITARY SPEC	SYM OR NO.	PROCESS OR FINISH	GRUMMAN SPEC OR MILITARY SPEC	SYM OR NO.	PROCESS OR FINISH	GRUMMAN SPEC OR MILITARY SPEC

I & T: IDENTIFICATION AND TRACEABILITY IN ACCORDANCE WITH : NONE

GRUMMAN AIRCRAFT ENGRG CORP, BETHPAGE, L. I., NEW YORK

SIZE	CODE IDENT NO.	
B	26512	LDW280-52356

SCALE NONE

SHEET 2.01

ENG 77.2 7-65

01

NAS 9-1100

CL		-9	-7	-5	-3	-1	CODE IDENT	PART NO.	I&T	NOMENCLATURE OR DESCRIPTION	MATERIAL	GOVT SPEC	COML SPEC	STOCK SIZE	PROCESS SYM	FINISH NO.	ZONE
QTY PER ASSEMBLY																	
								LDW280-16000	E								
M						1		-1002RCO-10		TUBE	SEE DWG						
			1					-1016 RCO-6									
			1					-1015 RCO-6									
			1					-1014 RCO-6									
			1					-1013 RCO-6									
			1					-1012 RCF-6									
			1					-1011 RCF-6									
			1					-1010 RCF-6									
			1					-1009 RCF-6									
						1		-1001 RCF-10									
						1		-1000 RCF-10									
						1		-999 RCO-10									
						1		-998 RCO-10									
						1		-997 RCF-10									
						1		-996 RCO-10									
						1		-995 RCF-10									
						1		-993 RCF-10									
						1		-992 RCF-10									
						1		-991 RCF-10									
						1		-990 RCO-10									
						1		-989 RCO-10									
						1		-988 RCF-10									
						1		-987 RCO-10									
						1		-986 RCO-10									
						1		-985 RCF-10									
						1		-984 RCO-10									
						1		-983 RCO-10									
M						1		-982 RCF-10		TUBE	SEE DWG						
								LDW280-16000	E								

SYM OR NO.	PROCESS OR FINISH	GRUMMAN SPEC OR MILITARY SPEC	SYM OR NO.	PROCESS OR FINISH	GRUMMAN SPEC OR MILITARY SPEC	SYM OR NO.	PROCESS OR FINISH	GRUMMAN SPEC OR MILITARY SPEC

I & T: IDENTIFICATION AND TRACEABILITY IN ACCORDANCE WITH : NONE

GRUMMAN AIRCRAFT ENGRG CORP, BETHPAGE, L. I., NEW YORK

SIZE	CODE IDENT NO.	
B	26512	LDW280-52356
SCALE NONE		SHEET 2 OF 2

ENG 77.2 7-65

01

NAS 9-1100

CL		-9	-7	-5	-3	-1	CODE IDENT	PART NO.	I&T	NOMENCLATURE OR DESCRIPTION	MATERIAL	GOVT SPEC	COML SPEC	STOCK SIZE	PROCESS SYM	FINISH NO.	ZONE
	QTY PER ASSEMBLY																
								LDW280-16000	E								
M						1		-526		BRAZED ASSY	SEE DWG						
						1		-525		BRAZED ASSY							
						1		-1116 RCF-4		TUBE							
						1		-1115 RCO-4									
						1		-1054 RCO-4									
M						1		-1053 RCF-4									
M		1						-1032 RCF-6									
		1						-1031 RCF-6									
		1						-1030 RCO-6									
		1						-1029 RCO-6									
					1			-1028 RCF-6									
					1			-1027 RCO-6									
					1			-1026 RCO-6									
					1			-1025 RCF-6									
				1				-1024 RCO-6									
				1				-1023 RCO-6									
				1				-1022 RCO-6									
				1				-1021 RCO-6									
				1				-1020 RCF-6									
				1				-1019 RCF-6									
				1				-1018 RCF-6									
M				1				-1017 RCF-6		TUBE	SEE DWG						
								LDW280-16000	E								

SYM OR NO.	PROCESS OR FINISH	GRUMMAN SPEC OR MILITARY SPEC	SYM OR NO.	PROCESS OR FINISH	GRUMMAN SPEC OR MILITARY SPEC	SYM OR NO.	PROCESS OR FINISH	GRUMMAN SPEC OR MILITARY SPEC

I & T: IDENTIFICATION AND TRACEABILITY IN ACCORDANCE WITH : NONE

GRUMMAN AIRCRAFT ENGRG CORP, BETHPAGE, L. I., NEW YORK

SIZE	CODE IDENT NO.	
B	26512	LDW280-52356

SCALE NONE SHEET 2.03

ENG 77.2 7-65

01 NAS 9-1100

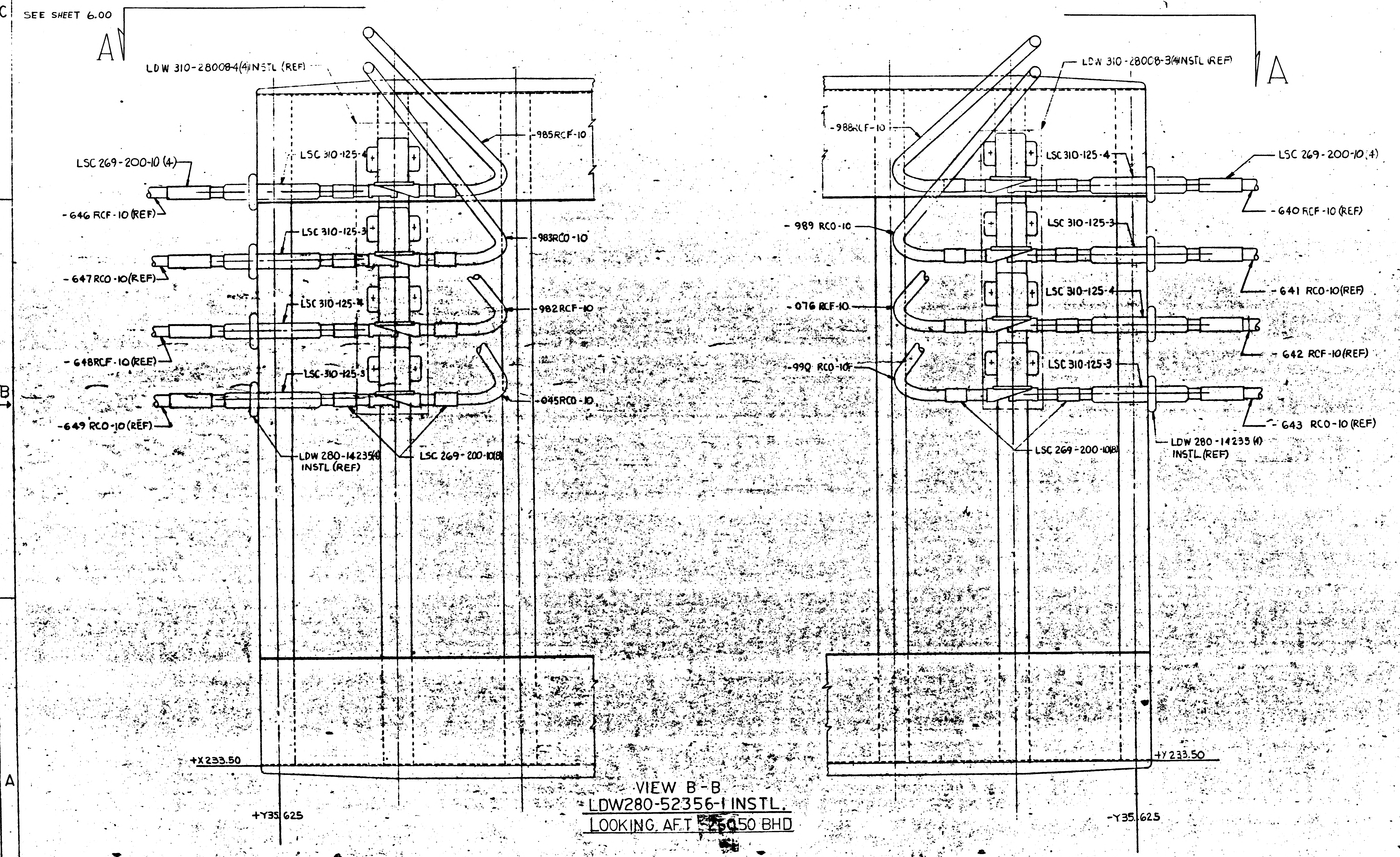
13
12
11
10
9
C
B
A
SEE SHEET 6.00
A
A
LDW 310-28008-4(4) INSTL (REF)
LDW 310-28008-3(4) INSTL (REF)
LSC 269-200-10 (4)
-646 RCF-10 (REF)
LSC 310-125-4
-985 RCF-10
LSC 310-125-3
-983 RCO-10
-647 RCO-10 (REF)
LSC 310-125-4
-982 RCF-10
-648 RCF-10 (REF)
LSC-310-125-3
-045 RCO-10
-649 RCO-10 (REF)
LDW 280-14235(4) INSTL (REF)
LSC 269-200-10(8)
-988 RCF-10
LSC 310-125-4
LSC 269-200-10 (4)
-640 RCF-10 (REF)
-989 RCO-10
LSC 310-125-3
-641 RCO-10 (REF)
-076 RCF-10
LSC 310-125-4
-642 RCF-10 (REF)
-990 RCO-10
LSC 310-125-3
-643 RCO-10 (REF)
LSC 269-200-10(8)
LDW 280-14235 (4) INSTL (REF)
+X 233.50
+Y 233.50
+Y35.625
-Y35.625

VIEW B-B

LDW280-52356-1 INSTL.

LOOKING AFT 250.50 BHD

01/02 NAS 9-1100

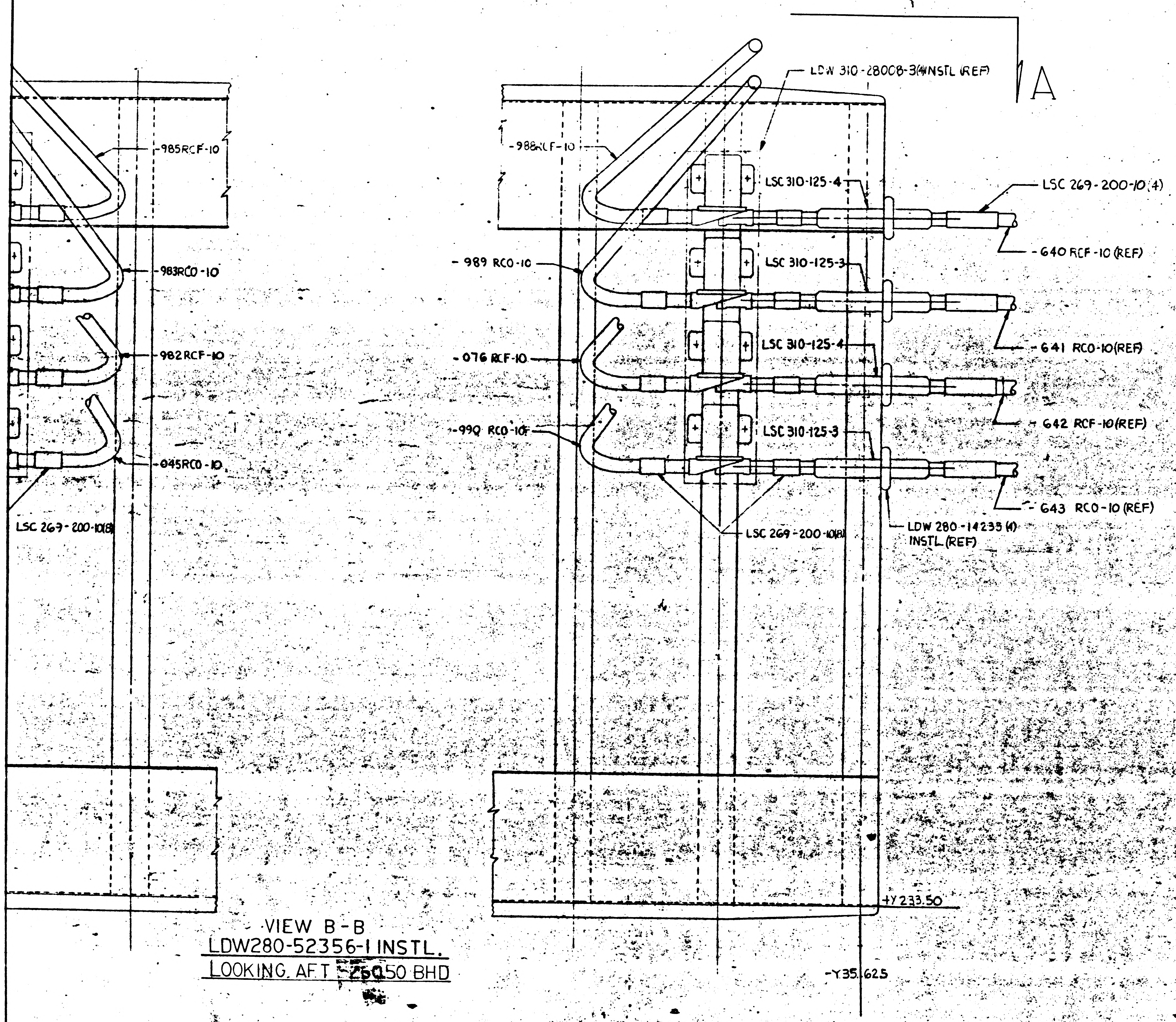
A
LDW 310-28008-3(4)INSTL (REF)
-988RCF-10
-985RCF-10
LSC 310-125-4
LSC 269-200-10(4)
-640 RCF-10 (REF)
-989 RCO-10
-983RCO-10
LSC 310-125-3
-641 RCO-10(REF)
-076 RCF-10
-982RCF-10
LSC 310-125-4
-642 RCF-10(REF)
-990 RCO-10
-045RCO-10
LSC 310-125-3
-643 RCO-10 (REF)
LSC 269-200-10(8)
LSC 269-200-10(8)
LDW 280-14235 (4) INSTL (REF)
+Y 233.50
-Y35.625

VIEW B-B
LDW280-52356-1 INSTL.
LOOKING AFT 260.50 BHD

MANUFACTURING OPERATIONS
UNLESS OTHERWISE SPECIFIED
NOTES CHECKED ✓ APPLY TO THIS DWG.

PART NUMBER AND ALL OTHER MARKINGS IN REGION MARKED ▭ USE BOTH SIDES IF NECESSARY.	
FILLET AND INSIDE CORNER RADII TOLERANCES .016R TO .062R ± .010 .063R TO .250R ± .015 OVER .250R ± .030	
DEPTH SHOWN FOR TAPPED HOLES IS FULL THDS 2-3 IMP THDS. BEYOND PERMISSIBLE	
EXTERNAL THREAD LENGTH SHOWN INCLUDES 2 IMPERFECT THREADS MAX.	
DO NOT CADMIUM-PLATE & PAINT HOLES OR SURFACES MARKED WITH DOUBLE ASTERISK.	
MISMATCH STEP OF ± .005 PERMISSIBLE DUE TO CHANGE OF CUTTERS AT INSIDE INTERSECTING SURFACES	
DIAMETERS MARKED MUST BE CONCENTRIC WITHIN FULL INDICATOR READING	
HOLES MUST BE KEPT FREE OF CHROME PLATING SOLUTION.	
ALL DIMENSIONS SHOWN TO BE MET AFTER CADMIUM PLATING. THICKNESS OF PLATE .0003 MIN. TO .0005 MAX MIN THICKNESS TO BE .0002 ON THREADED AREAS. NO ALLOWANCE FOR PLATING IN HOLES	
125 √ SURFACE ROUGHNESS INCLUDING REAMED HOLES PER MIL-STD-10	
200 √ FOR ALL DRILLED HOLES	
REMOVE ALL BURRS. BREAK ALL EDGES .015-.031	
INSPECTION INFORMATION MINIMUM PERMISSIBLE AVERAGE EDGE DISTANCE MARKED IS	
SYMBOL ƒ DENOTES SURFACE TO BE MACHINED	
UNLESS OTHERWISE SPECIFIED TOLERANCE ON FLANGES IS ± 1/32	
LENGTHS OF AN, NAS & MS AL ALY RIVETS SHORTER THAN 1 INCH ARE NOT SPECIFIED.	
TOLERANCE ON LOFTED DELINEATIONS IS	

DWG SIZE 34 X

PRINTING INFO ONLY
FULL SIZE SHEET AREA (36 X) = SQ. FT.
1/2 SIZE SHEET AREA (1/4 OF FULL) = SQ. FT.
PRINT TRIM LINE

LDW280-52356

LDW280-52356

THIS IS AN ORIGINAL DWG

02/02

NAS 9-1100

THIS IS AN ORIGINAL DRAWING

	GRUMMAN AIRCRAFT ENGRG CORP., BETHPAGE, L. I., NEW YORK			
LEM-2(32)	SIZE J	CODE IDENT NO. 26512	LDW280-52356	
MODEL OR END ITEM	SCALE HALF		SHEET 5.00	

ENG 32.1 REV 3-65

GRUMMAN AIRCRAFT ENGINEERING CORP.
CODE IDENT NO. 26512

ENGINEERING ORDER

DWG. NO. LEO 280-
EO NO. 314
CONTROL INFO NO. LDW280-A2087

ON SH 3 OF THE FOLLOWING DWGS

DWG No.	CHG NO	DWG No.	CHG NO	DWG NO	CHG NO
✓ LDW280-52350	A2	✓ LDW280-52354	A4	LDW280-52358	A1
✓ 52351	A2	✓ -52355	A2	-52359	A3
✓ 52352	A1	✓ -52356	A1	LDW 280-52360	A2
✓ LDW 280-52353	A1	LDW280 -52357	B2		

ADD THE FOLLOWING NOTE

‡ SUBSTITUTION OF NAS1132V*, AN525-832R* OR AN525-832-* BOLTS FOR THE GB511J-08-* BOLT IS PERMISSIBLE

* USE NEXT AVAILABLE NUMBER.

THIS IS A RE-ISSUE OF LEO 280-314 ~ INCOMPLETE CHANGE NO'S ON ORIG ISSUE

(5)

DETAIL SPEC REQ ☐ CL II ENGRG CHG ☐ CL I ENGRG CHG ☐

REASON FOR EO: HARDWARE NOT AVAILABLE

DESCRIPTION OF EO: ON SH 3 ADDED NOTE ‡ (‡)

GAEC EO RELEASE: 10/17

MODEL	EFFECTIVITY: PROCURING ACTIVITY NO.	GAEC UNIT NO.	SUB CONTR UNIT NO.
LM		LM-2 (32)	

DRAWING CHANGE REQD: REVISE DWG ✓ RECORD EO

DISPOSITION OF PARTS: REWORK NOT REQD SCRAP REQD

APPROVED BY		—	—	—				
✓ DATE	10-11-66				10-12		10-12-66	10/15/66
	VDI	SUPPORT	RELIAB GROUP	GROUP LEADER	STRESS GROUP	LIAISON ENGRG	PROJ ENGRG	

PRIORITY: C

DRAWING TITLE: LINES INSTALLATIONS

DRAWING NO: LEO - 280-

EO NO. 314

ISSUED BY C.H. COHEN X7033

SECTION EQUIP LINES (VDI) GROUP NO. 332 PL 35

01

NAS 9-1100

RELEASED BY LIAISON

GRUMMAN AIRCRAFT ENGINEERING CORP.
CODE IDENT NO. 26512
ENGINEERING ORDER

ENG 32.1 REV 3-65

DWG. NO. LDW280-52356		EO NO. A3	
CONTROL INFO NO. LM5-13013			

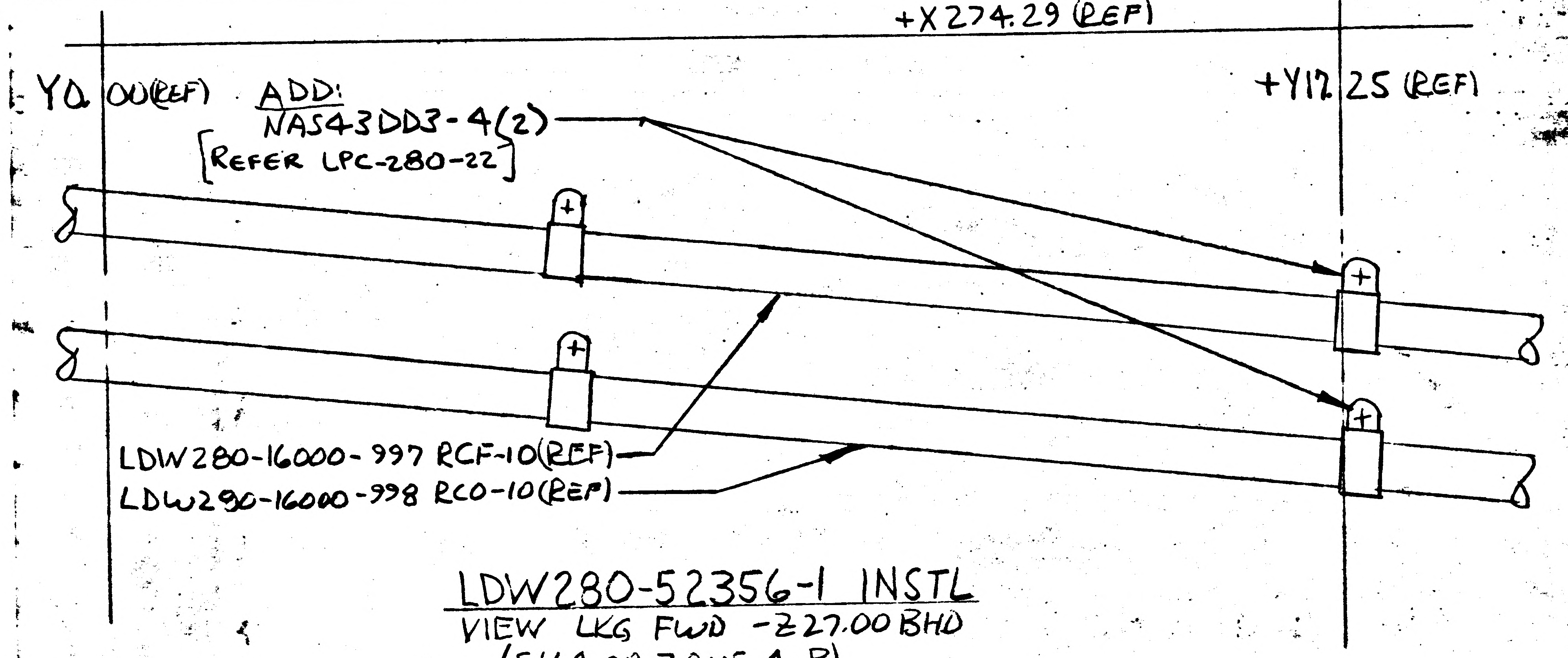
+X274.29 (REF)
Y0.00(REF)
+Y12.25 (REF)
ADD:
NAS43DD3-4(2)
[REFER LPC-280-22]
LDW280-16000-997 RCF-10(REF)
LDW280-16000-998 RCO-10(REF)

LDW280-52356-1 INSTL
VIEW LKG FWD -Z27.00 BHD
(SH 4.00 ZONE 4-B)

DETAIL SPEC REQ	☐	CL II ENGRG CHG	✓	CL I ENGRG CHG	☐

5

REASON FOR EO: TO CORRECT CHAFING OF RCS LINES ON STRUCTURE

DESCRIPTION OF EO: ON -1 INSTL ADDED NAS43DD3-4 (2)

GAEC C EO RELEASE: JK

MODEL	EFFECTIVITY: PROCURING ACTIVITY NO.	GAEC UNIT NO.	SUB CONTR UNIT NO.
LM		LM-2(32)	

DRAWING CHANGE REQD: REVISE DWG	RECORD EO	DISPOSITION OF PARTS: REWORK	SCRAP
✓		✓	

APPROVED BY			SUPPORT	RELIAB. GROUP	GROUP LEADER	STRESS GROUP	LIAISON ENGRG	PROJ ENGRG	~~GOVT~~
						MSA	CH		
DATE	/					3/18/67	3-17-67	3-21-67	3/18/67

PRIORITY	DRAWING TITLE	DRAWING NO.	EO NO.
C	LINES INSTL REACTION CONTROL SUB-SYSTEM ASCENT STAGE	LDW280-52356	A3

ISSUED BY J. DE VITA X 1153 SECTION EQUIP LINES (VD1) GROUP NO. 332 PL 25

01

NAS 9-1100

B

ENG 32 1 REV 3-65

GRUMMAN AIRCRAFT ENGINEERING CORP.
CODE IDENT NO. 26512
ENGINEERING ORDER

DWG NO. LDW280-52356
EO NO. A4
CONTROL INFO NO. LDW280A6113

ON -1 INSTL
IN F/D (SH 4.00 ZONE 5-B) LSC269-202-4(2) SHOULD BE LSC269-317-1(2)
IN B/M LSC269-202-4(4) SHOULD BE LSC269-202-4(2)
ADD LSC269-317-1(2)

DETAIL SPEC REQ ☐ CL II ENGRG CHG ☑ CL I ENGRG CHG ☐ LCD* 19-1077 5

REASON FOR EO: IMPROPER CALLOUT IN F/D & B/M; MALE/FEMALE PART REQD

DESCRIPTION OF EO: ON-1 INSTL IN F/D (SH 4.00 ZONE 5-B) LSC269-317-1(2) WAS LSC269-202-4(2). IN B/M LSC269-202-4(2) WAS LSC269-202-4(4), ADDED LSC269-317-1(2)

Ⓡ GAEC C EO RELEASE: JS 3-30-7

MODEL	PROCURING ACTIVITY NO	GAEC UNIT NO	SUB CONTR UNIT NO
LM		LM-2 (32)	

DRAWING CHANGE REQD: REVISE DWG ✓ RECORD EO ☐
DISPOSITION OF PARTS: REWORK ✓ SCRAP ☐

			SUPPORT	RELIAB GROUP	GROUP LEADER	STRESS GROUP	LIAISON ENGRG	PROJ ENGRG	
APPROVED BY	JAP				JW	CW		Dam	
DATE	3/24/67				3/23	3-27-67		3/28/67	3/28/67

PRIORITY: C
DRAWING TITLE: LINES INSTALLATION REACTION CONTROL SUBSYSTEM ASCENT STAGE
DRAWING NO. LDW280-52356
EO NO. A4

3-24-67
ISSUED BY J. DE VITA X 1153
SECTION EQUIP LINES (VDI) GROUP NO. 332 PL 25

01

NAS 9-1100

1

B

ENG 32.1 REV 3-66

GRUMMAN AIRCRAFT ENGINEERING CORP.
CODE IDENT NO. 26512 *

ENGINEERING ORDER

DWG. NO. LDW 280-52356		EO NO. A5
CONTROL INFO NO LM5-13209		

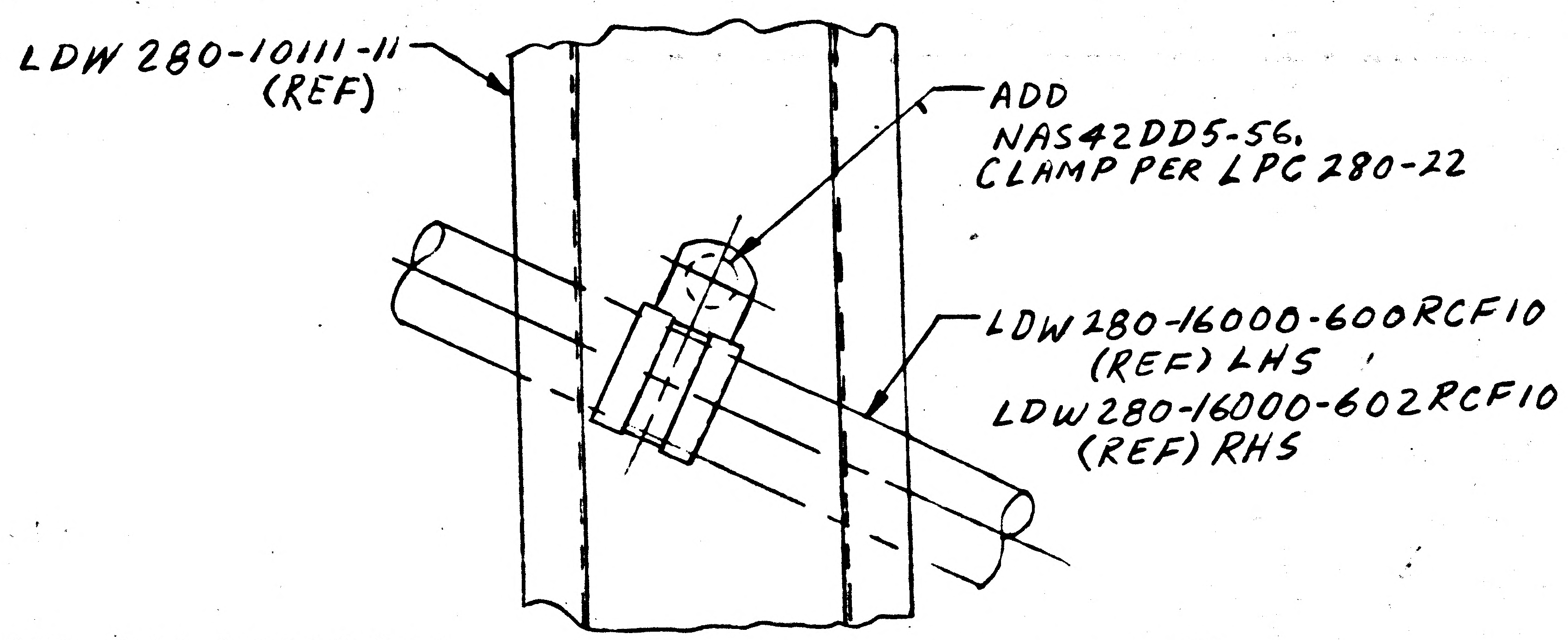
LDW 280-10111-11 (REF)
ADD NAS42DD5-56, CLAMP PER LPC 280-22
LDW 280-16000-600RCF10 (REF) LHS
LDW 280-16000-602RCF10 (REF) RHS

RELEASED BY LIAISON

VIEW LOOKING AFT LHS MID SECT
FWD RHS MID SECT

DETAIL SPEC REQ	☐	CL II ENGRG CHG	☑	CL I ENGRG CHG	☐	5

REASON FOR EO	DESCRIPTION OF EO	GAEC EO RELEASE
TO PROVIDE SUPPORT FOR RCS LINES	ON-1 ADDED NAS 42DD5-56 (2) & CLAMP PER LPC 280-22	VK –

MODEL	EFFECTIVITY: PROCURING ACTIVITY NO.	GAEC UNIT NO.	SUB CONTR UNIT NO.
LM		LM2 (32)	

DRAWING CHANGE REQD: REVISE DWG	RECORD EO	DISPOSITION OF PARTS: REWORK	SCRAP			SUPPORT	RELIAB. GROUP	GROUP LEADER	STRESS GROUP	LIAISON ENGRG	PROJ ENGRG	GOVT
✓		✓		APPROVED BY	WT			~		CH		
				DATE	4/19/67			~	4-20-67	4-20		4-20-67
				1	VDI							

PRIORITY	DRAWING TITLE	DRAWING NO.	EO NO.
C	LINES INSTALLATION REACATION CONTROL SUBSYSTEM	LDW280-52356	A5

ISSUED BY ROSADO · X1508 4-19-67 SECTION EQUIP LINES GROUP NO. 332 PL 5

01 NAS 9-1100

ENG 32.1 REV 3-65

GRUMMAN AIRCRAFT ENGINEERING CORP.
CODE IDENT NO. 26512

ENGINEERING ORDER

DWG. NO. LDW280-52356
EO NO. A6
CONTROL INFO NO. LDW280A 9264

IN F/D ON -3, -5, -7 & -9 ASSY'S (TYPICAL 4 PLACES EACH ASSY) ADD MS20995NC51 LOCKWIRE AS SHOWN TO LDW310-10023 NUT (SH 6.00 & SH 8.00)

IN B/M ON -3, -5, -7 & -9 ASSY ADD MS20995NC51 LOCKWIRE, QUANTITY: AS REQD

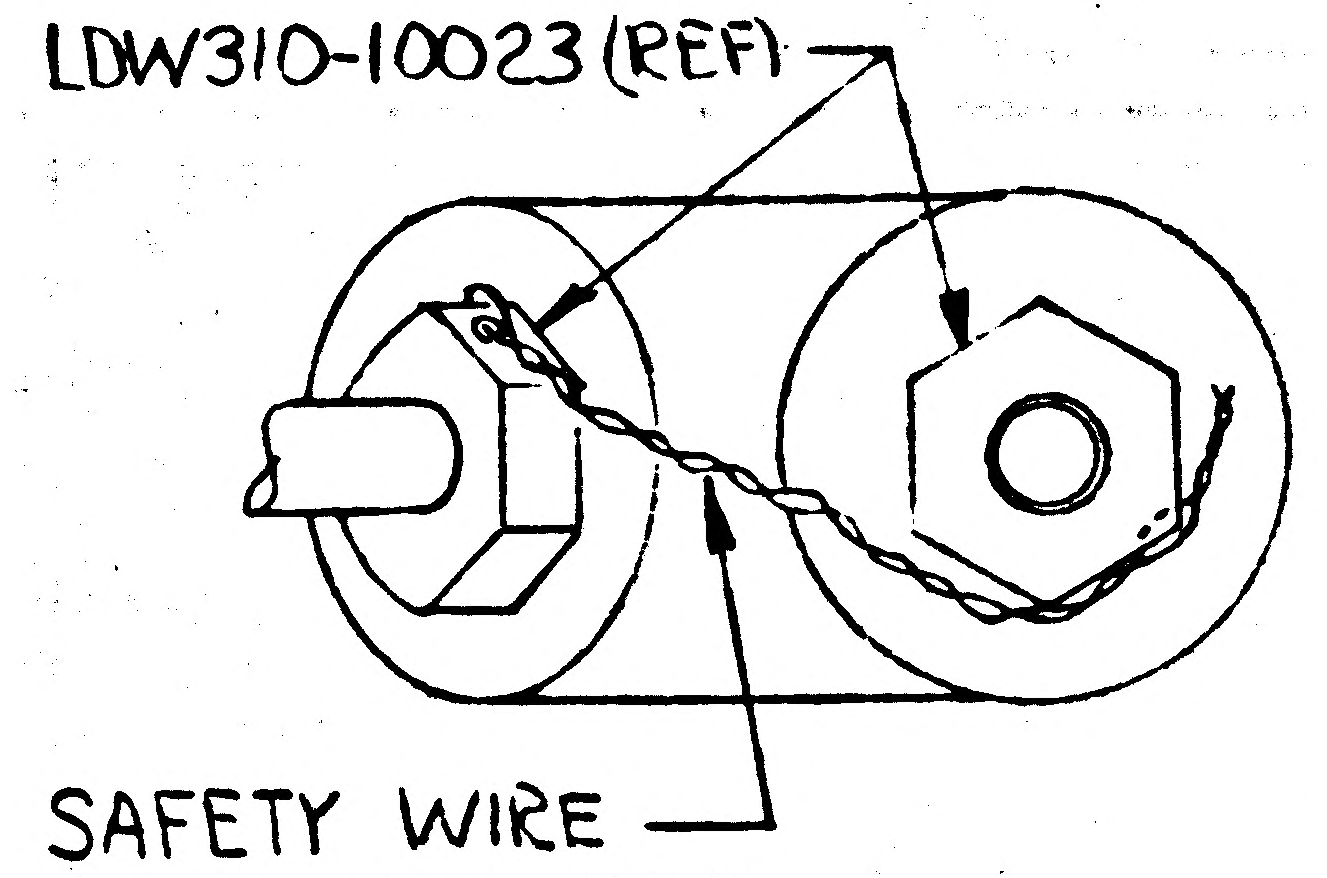

SAFETY WIRE AS SHOWN PER MS33540 USING MS20995NC51 LOCKWIRE (TYPICAL 16 PLACES)

LDW280-52356-3, -5, -7 & -9 ASSY
(SH 6.00 & SH 8.00)

DETAIL SPEC REQ ☐ CL II ENGRG CHG ☐ CL I ENGRG CHG ☑ LCD 2126 RFC 2.5.7

REASON FOR EO: TO CALL FOR SAFETY WIRING OF FITTINGS ON RCS ENGINES

DESCRIPTION OF EO: IN F/D & B/M ADDED MS20995NC51 LOCKWIRE

GAEC EO RELEASE: JK 9/20/67

MODEL	PROCURING ACTIVITY NO.	GAEC UNIT NO.	SUB CONTR UNIT NO.
LM		LM-2 (32)	

DRAWING CHANGE REQD: REVISE DWG ✓ RECORD EO
DISPOSITION OF PARTS: REWORK ✓ SCRAP

APPROVED BY				JW	GW				
DATE	9/18/67			9/19/67	9.18		9/19/67	9-26-67	
H	VDI	SUPPORT	RELIAB. GROUP	GROUP LEADER	STRESS GROUP	LIAISON ENGRG	PROJ ENGRG	~~GOVT~~	

PRIORITY: C
DRAWING TITLE: LINES INSTL REACTION CONTROL SUBSYSTEM ASCENT STAGE
DRAWING NO. LDW280-52356
EO NO. A6

ISSUED BY J. DeVITA X1153 (9-16-67) 10-1-67
SECTION EQUIP LINES (VDI)
GROUP NO. 332
PL 25

01

NAS 9-1100

ENG 32.1 REV 3-65

GRUMMAN AIRCRAFT ENGINEERING CORP.
CODE IDENT NO. 26512
ENGINEERING ORDER *

DWG. NO. LEO 280
EO NO. 716
CONTROL INFO NO. LDW280A9311

TO THE DRAWINGS LISTED BELOW:

ON -5 INSTL IN F/D, SECTION F-F (SH 6.00 ZONE 16-B) REVISE THE FOLLOWING CALLOUTS; -1024RCO-6 SHOULD BE -1020RCF-6
-1020 RCF-6 SHOULD BE -1024 RCO-6

DRAWING NUMBER		CHANGE NUMBER
✓ LDW280-51356		A8
✓ LDW280-52356		A7
LDW280-53356		B2
LDW280-54356		B6

DETAIL SPEC REQ ☐ CL II ENGRG CHG ☑ CL I ENGRG CHG ☐

REASON FOR EO: DRAWING CORRECTION ONLY

DESCRIPTION OF EO: ON-5 INSTL IN F/D REVISED CALLOUTS
-1024 RCO-6 S/B -1020 RCF-6, -1020 RCF-6 S/B -1024 RCO-6

Ⓡ GAEC EO RELEASE: JK

MODEL	PROCURING ACTIVITY NO.	GAEC UNIT NO.	SUB CONTR UNIT NO.
LM		NOT REQD	

DRAWING CHANGE REQD: REVISE DWG ✓ RECORD EO

DISPOSITION OF PARTS: REWORK NOT SCRAP REQD

	VDI	SUPPORT	RELIAB. GROUP	GROUP LEADER	STRESS GROUP	LIAISON ENGRG	PROJ ENGRG	
APPROVED BY				JW				
DATE	9/23/67			9/22/67	9-22		9/23/67	9/25/67

PRIORITY: E

DRAWING TITLE: LINES INSTL REACTION CONTROL SUBSYSTEM ASCENT STAGE

DRAWING NO.: LEO 280

EO NO.: 716

9-28-67
ISSUED BY J. DeVITA X1153 (9-22-67)

SECTION EQUIP LINES (VDI)

GROUP NO. 332 PL 25

01

NAS 9-1100

ENG 32.1 REV 3-65

GRUMMAN AIRCRAFT ENGINEERING CORP.
CODE IDENT NO. 26512
ENGINEERING ORDER

DWG. NO. LEO 280
EO NO. 769
CONTROL INFO NO. LDW280B0076

DELETE NOTE * FROM THE FOLLOWING DWGS

DRAWING NUMBER	EFFECTIVITY	CHANGE NUMBER	NOTE *
LDW280-52353 ✓	LM-2(32)	C1	8
-52354 ✓	LM-2(32)	A6	3
-52355 ✓	LM-2 (32)	D1	8
-52356 ✓	LM-2 (32)	A8	5
-52351	LM-2 (32)	A9	5
-52350	LM-2 (32)	E1	31
LDW 280 -52608	LM-2 (32)	D2	7

DETAIL SPEC REQ ☐ CL II ENGRG CHG ☐ CL I ENGRG CHG ☐ ✓ LCD 1961

5

REASON FOR EO: BONDING NOTE NOT REQD

DESCRIPTION OF EO: DELETED NOTE *

GAEC EO RELEASE: C JK 10/31/67

MODEL	EFFECTIVITY		
	PROCURING ACTIVITY NO.	GAEC UNIT NO.	SUB CONTR UNIT NO.
LM		LM-2(32)	

DRAWING CHANGE REQD: ✓ REVISE DWG ☐ RECORD EO

DISPOSITION OF PARTS: NOT REQD REWORK SCRAP

APPROVED BY	JGS			HJW	WJB		WRB	
DATE	10/26/67			10/26/67	10/27/67		10/31/67	10/30/67
E	VDI	SUPPORT	RELIAB. GROUP	GROUP LEADER	STRESS GROUP	LIAISON ENGRG	PROJ ENGRG	

PRIORITY: C
DRAWING TITLE: LINES INSTL PIPING ASCENT STAGE & DESCENT STAGE
DRAWING NO.: LEO280
EO NO.: 769

11-2-67
ISSUED BY J. DE VITA X1153 (10-25-67) SECTION EQUIP LINES (VDI) GROUP NO. 332 PL 25

01

NAS 9-1100

ENG 32.2 REV 3-66

GRUMMAN AIRCRAFT ENGINEERING CORP.
CODE IDENT NO. 26512
ENGINEERING ORDER

DWG. NO. LDW280-52356 | EO NO. A9
CONTROL INFO NO. LM-5-13708

TUBE NUMBERS ARE DASH NUMBERS OF LDW280-16000 IN F/D & DESCRIPTION OF EO

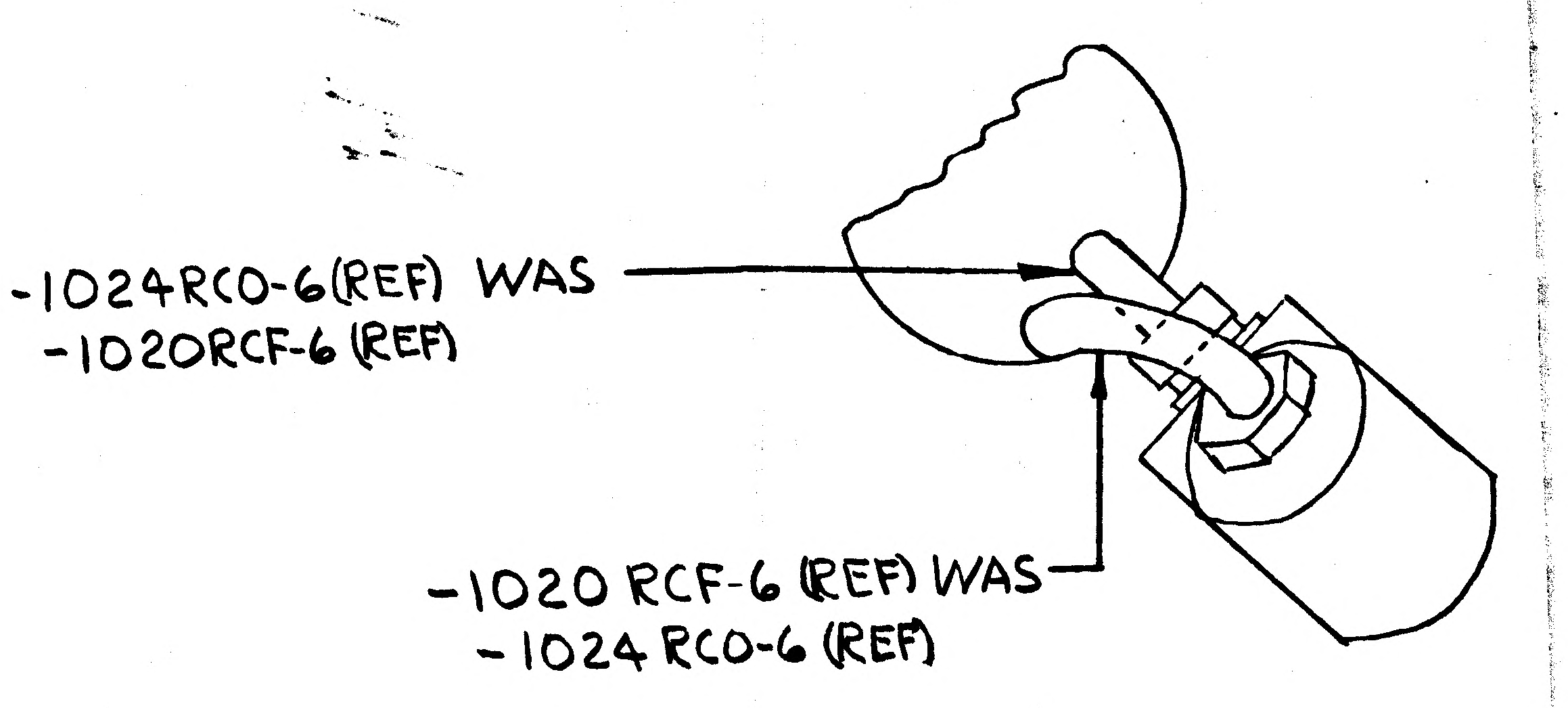
-1024RCO-6(REF) WAS
-1020RCF-6 (REF)
-1020 RCF-6 (REF) WAS
-1024 RCO-6 (REF)

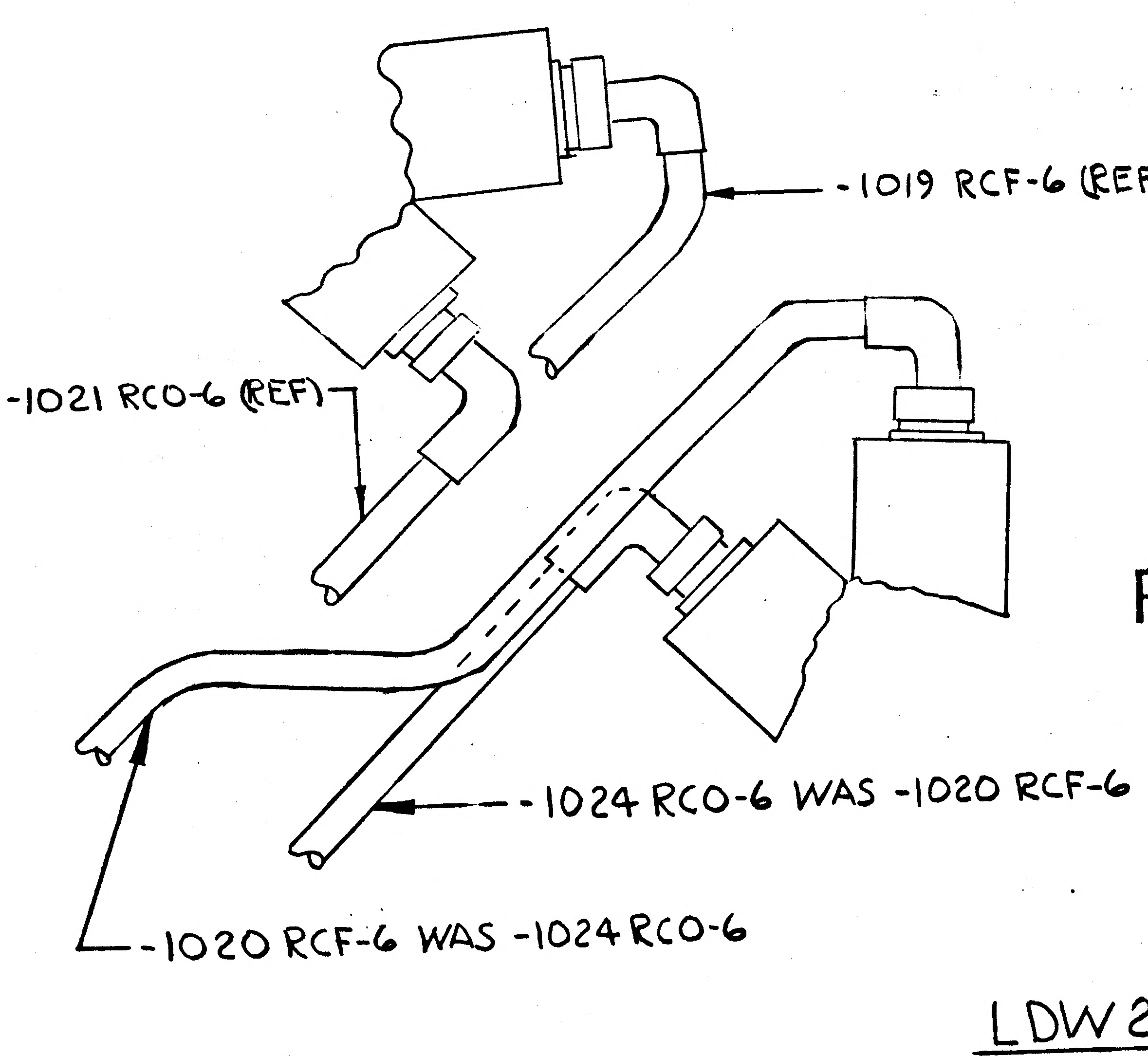
-1019 RCF-6 (REF)
-1021 RCO-6 (REF)
-1024 RCO-6 WAS -1020 RCF-6
-1020 RCF-6 WAS -1024 RCO-6

RELEASED BY LIAISON

LDW280-52356-5 ASSY

SECTION F-F
(SH 6.00 ZONE 16B)

WAS -1024 RCO-6 (REF)

DETAIL SPEC REQ		CL II ENGRG CHG	✓	CL I ENGRG CHG	

REASON FOR EO: DWG CORRECTION ONLY

DESCRIPTION OF EO: CORRECTED PICTURE OF ON-5 ASSY SECT F-F LINE RUN; -1024 RCO-6 WAS -1020 RCF-6; -1020 RCF-6 WAS -1024 RCO-6; -1024 RCO-6(REF) WAS -1020 RCF-6(REF); -1020 RCF-6(REF)

GAEC EO RELEASE: (5) JVC

MODEL	PROCURING ACTIVITY NO.	GAEC UNIT NO.	SUB CONTR UNIT NO.
LM		LM-2 (32)	

DRAWING CHANGE REQD		DISPOSITION OF PARTS		APPROVED BY	JJS			JW	DV	DV	JAP	
✓		NOT	REQD	DATE	12/2/67			12-9	11/29	11/29	12/1/67	11/30/67
REVISE DWG	RECORD EO	REWORK	SCRAP		VDI	SUPPORT	RELIAB. GROUP	GROUP LEADER	STRESS GROUP	LIAISON ENGRG	PROJ ENGRG	

PRIORITY: C
DRAWING TITLE: INSTL LINES REACTION CONTROL SUBSYSTEM ASCENT STAGE
DRAWING NO.: LDW280-52356
EO NO.: A9

ISSUED BY ROSADO (11-28-67) SECTION EQUIP LINES (VDI) GROUP NO. 332 PL 5

01
NAS 9-1100

C

ENG 32.1 REV 3-65

GRUMMAN AIRCRAFT ENGINEERING CORP.
CODE IDENT NO. 26512
ENGINEERING ORDER

DWG. NO. LDW280-52356
EO NO. B1
CONTROL INFO NO. LDW280B1979

ON -1 INSTL IN F/D SH 4.00 ZONE 5B
LDW 360-52269-1 WAS LSC 360-601-105 (4)(REF)

IN B/M ADD LDW360-52269-1 TRANSDUCER INSTL

DETAIL SPEC REQ	✓	CL II ENGRG CHG		CL I ENGRG CHG		5

REASON FOR EO
To CORRECT NHA OF
LDW 360-52269 (CDR 45T)

DESCRIPTION OF EO
ON -1 INSTL IN F/D
LDW360-52269-1 WAS LSC360-601-105(4)(REF)
IN B/M ADDED LDW360-52269-1 TRANSDUCER INSTL

GAEC C EO RELEASE
H.F 2/4/68

MODEL	EFFECTIVITY PROCURING ACTIVITY NO.	GAEC UNIT NO.	SUB CONTR UNIT NO.
LM		LM-2 (32)	

DRAWING CHANGE REQD		DISPOSITION OF PARTS		APPROVED BY								
				DATE	2/2/68			2/2	2-5		2/2/68	2/4/68
✓ REVISE DWG	RECORD EO	✓ REWORK	SCRAP		VDI	SUPPORT	RELIAB. GROUP	GROUP LEADER	STRESS GROUP	LIAISON ENGRG	PROJ ENGRG	~~GOVT~~

PRIORITY	DRAWING TITLE	DRAWING NO.	EO NO.
C	LINES INSTL REACTION CONTROL SUBSYSTEM ASCENT STAGE	LDW280-52356	B1

ISSUED BY J. DEVITA X1153 (2-2-68) SECTION EQUIP LINES (VDI) GROUP NO. 332 PL 25

01

NAS 9-1100

8 7 6 5 4 3 2 1

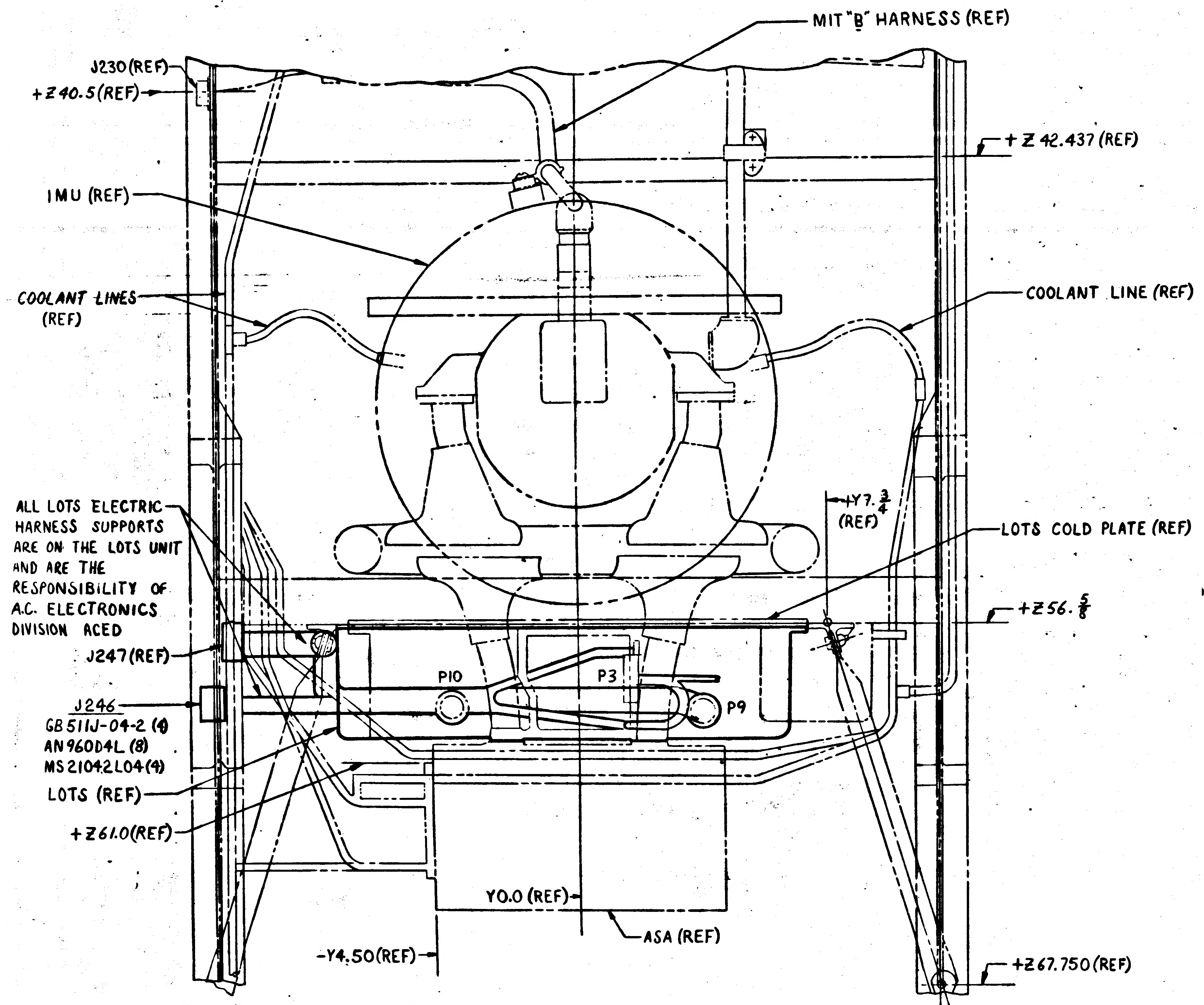
MIT "B" HARNESS (REF)
J230 (REF)
+Z40.5 (REF)
+Z 42.437 (REF)
IMU (REF)
COOLANT LINES (REF)
COOLANT LINE (REF)
+Y7.3/4 (REF)
LOTS COLD PLATE (REF)
ALL LOTS ELECTRIC HARNESS SUPPORTS ARE ON THE LOTS UNIT AND ARE THE RESPONSIBILITY OF A.C. ELECTRONICS DIVISION ACED
+Z56.5/8
J247 (REF)
P10
P3
P9
J246
GB511J-04-2 (4)
AN960D4L (8)
MS21042L04 (4)
LOTS (REF)
+Z61.0 (REF)
Y0.0 (REF)
ASA (REF)
-Y4.50 (REF)
+Z67.750 (REF)
+Y11.180 (REF)

VIEW LOOKING DOWN IMU AREA

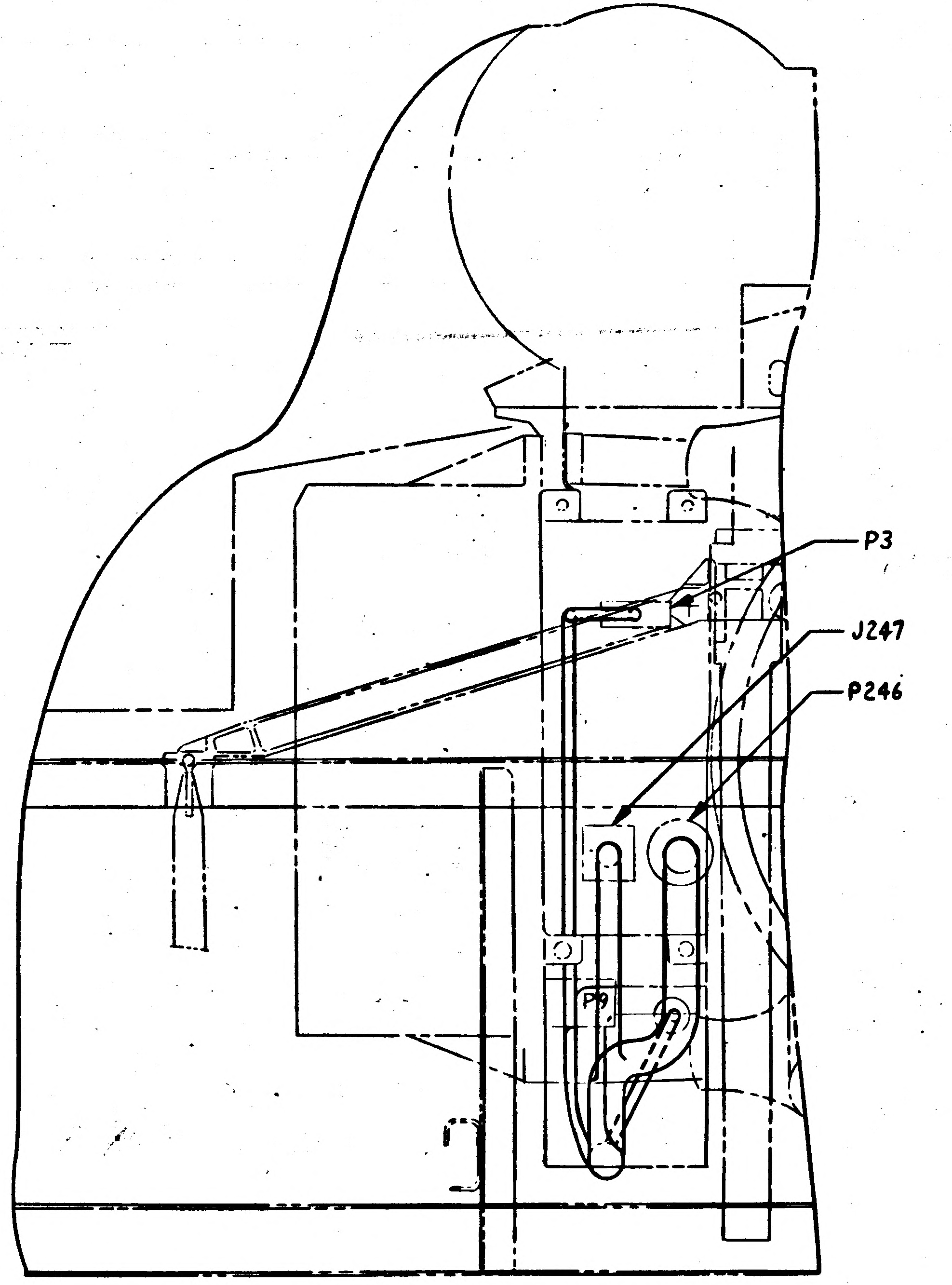
P3
J247
P246
P9

VIEW LOOKING INBOARD LH SIDE

MANUFACTURING OPERATIONS
UNLESS OTHERWISE SPECIFIED
NOTES CHECKED √ APPLY TO THIS DWG.

PART NUMBER AND ALL OTHER MARKINGS IN REGION MARKED ▭ USE BOTH SIDES IF NECESSARY.

FILLET AND INSIDE CORNER RADII TOLERANCES
.016R TO .062R ± .010
.063R TO .250R ± .015
OVER .250R ± .030

DEPTH SHOWN FOR TAPPED HOLES IS FULL THDS. 2-3 IMP THDS. BEYOND PERMISSIBLE.

EXTERNAL THREAD LENGTH SHOWN INCLUDES 2 IMPERFECT THREADS MAX.

DO NOT CADMIUM PLATE & PAINT HOLES OR SURFACES MARKED WITH DOUBLE ASTERISK.

MISMATCH STEP OF ± .005 PERMISSIBLE DUE TO CHANGE OF CUTTERS AT INSIDE INTERSECTING SURFACES.

DIAMETERS MARKED MUST BE CONCENTRIC WITHIN FULL INDICATOR READING

HOLES MUST BE KEPT FREE OF CHROME PLATING SOLUTION.

ALL DIMENSIONS SHOWN TO BE MET AFTER CADMIUM PLATING. THICKNESS OF PLATE .0003 MIN. TO .0005 MAX. MIN. THICKNESS TO BE .0002 ON THREADED AREAS. NO ALLOWANCE FOR PLATING IN HOLES

125 SURFACE ROUGHNESS INCLUDING REAMED HOLES PER MIL-STD-10

200 FOR ALL DRILLED HOLES

REMOVE ALL BURRS. BREAK ALL EDGES .015-.031

INSPECTION INFORMATION MINIMUM PERMISSIBLE AVERAGE EDGE DISTANCE MARKED IS

SYMBOL √ DENOTES SURFACE TO BE MACHINED

UNLESS OTHERWISE SPECIFIED TOLERANCE ON FLANGES IS ± 1/32

LENGTHS OF AN, NAS & MS AL ALY RIVETS SHORTER THAN 1 INCH ARE NOT SPECIFIED.

TOLERANCE ON LOFTED DELINEATIONS IS

LM	GRUMMAN AIRCRAFT ENGRG CORP., BETHPAGE, L. I., NEW YORK			
	SIZE F	CODE IDENT NO. 26512	LDW280-52357	A
MODEL OR END ITEM	SCALE 1/2		SHEET 1 1.06	

8 7 6 5 4 3 2 This is an original 1

01

NAS 9-1100

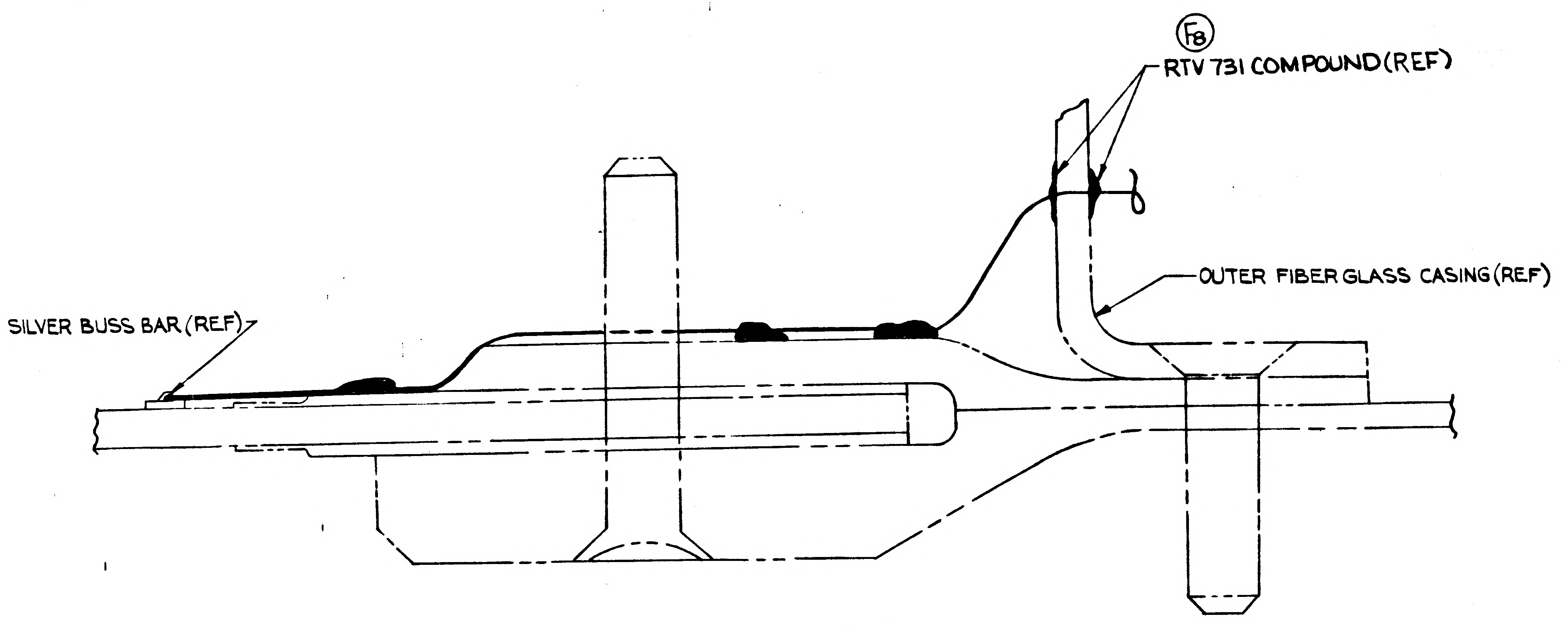
(F8)
RTV 731 COMPOUND(REF)
OUTER FIBER GLASS CASING(REF)
SILVER BUSS BAR(REF)

(B7) (C4)
SECTION AE-AE (ZONE 6C)
SCALE: NONE

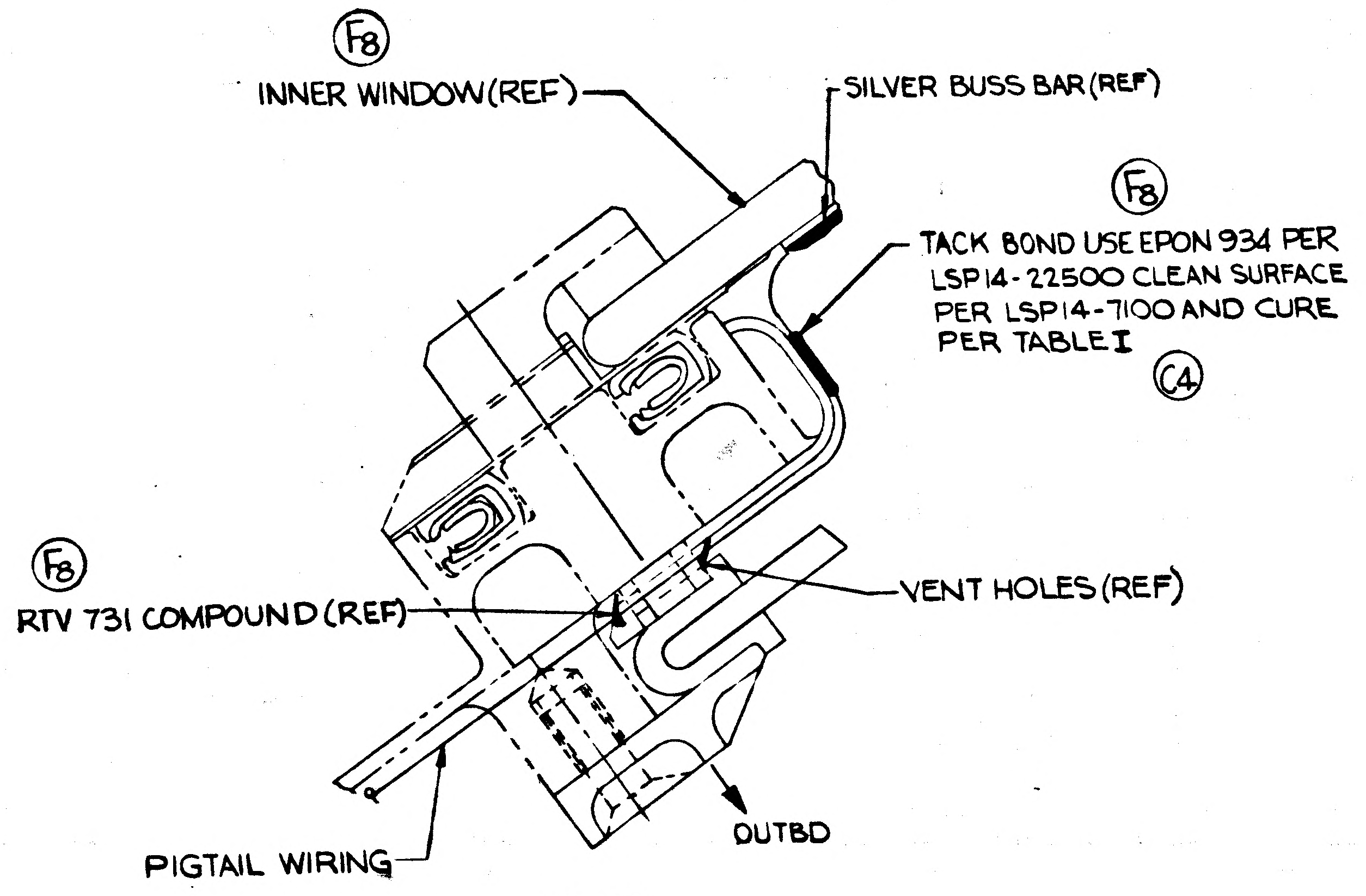
(F8)
INNER WINDOW(REF)
SILVER BUSS BAR(REF)
(F8)
TACK BOND USE EPON 934 PER
LSP14-22500 CLEAN SURFACE
PER LSP14-7100 AND CURE
PER TABLE I
(C4)
(F8)
RTV 731 COMPOUND(REF)
VENT HOLES(REF)
PIGTAIL WIRING
OUTBD

(B7) (C4)
SECTION AF-AF (ZONE 4A)
SCALE: NONE

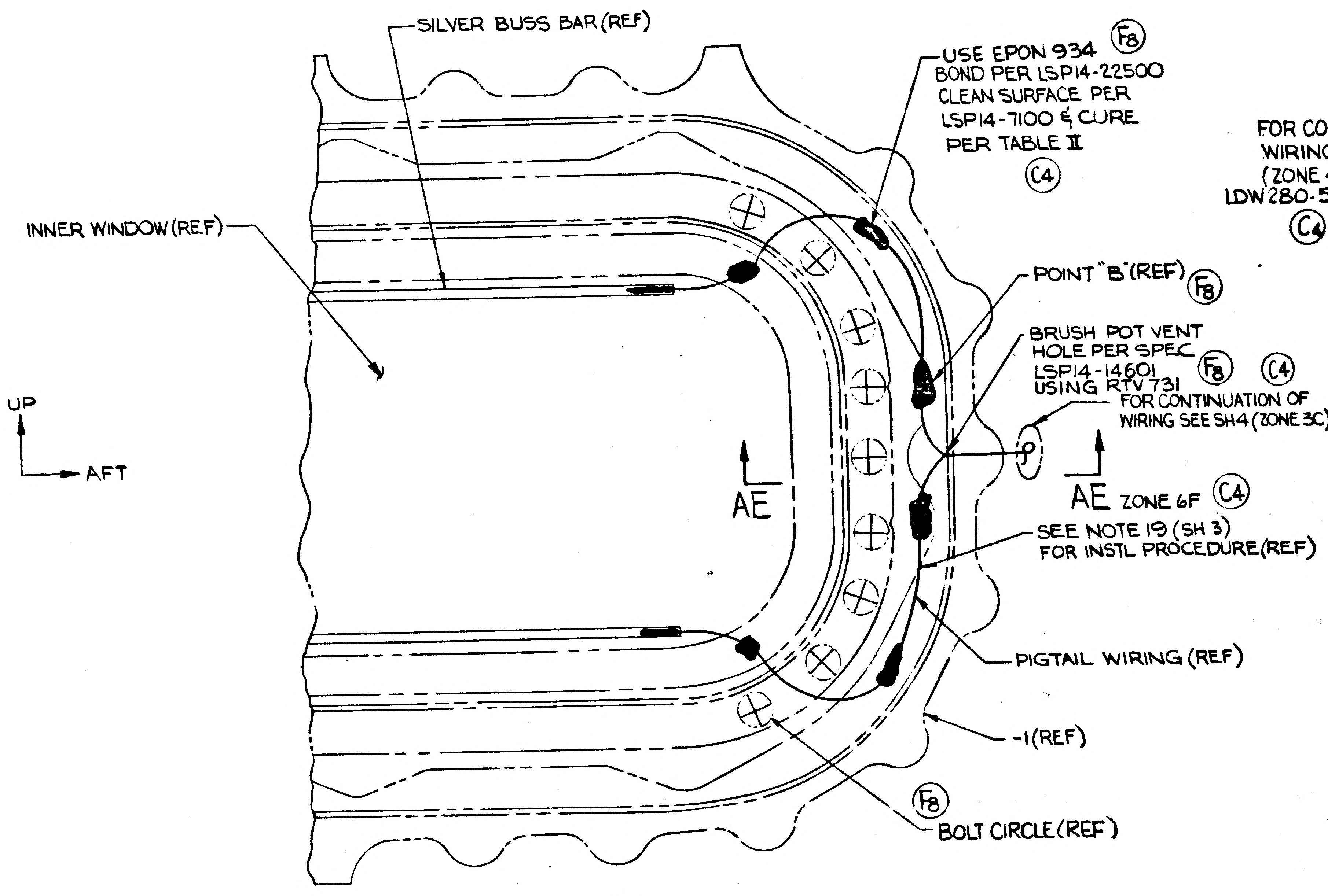
SILVER BUSS BAR(REF)
USE EPON 934 (F8)
BOND PER LSP14-22500
CLEAN SURFACE PER
LSP14-7100 & CURE
PER TABLE II
(C4)
INNER WINDOW(REF)
POINT "B"(REF) (F8)
BRUSH POT VENT
HOLE PER SPEC
LSP14-14601
USING RTV 731
(F8) (C4)
FOR CONTINUATION OF
WIRING SEE SH4 (ZONE 3C)
UP
AFT
AE
AE ZONE 6F (C4)
SEE NOTE 19 (SH 3)
FOR INSTL PROCEDURE(REF)
PIGTAIL WIRING (REF)
-1(REF)
(F8)
BOLT CIRCLE(REF)

(B7)
VIEW LOOKING INBOARD
LH SIDE DOCKING WINDOW
SCALE: FULL

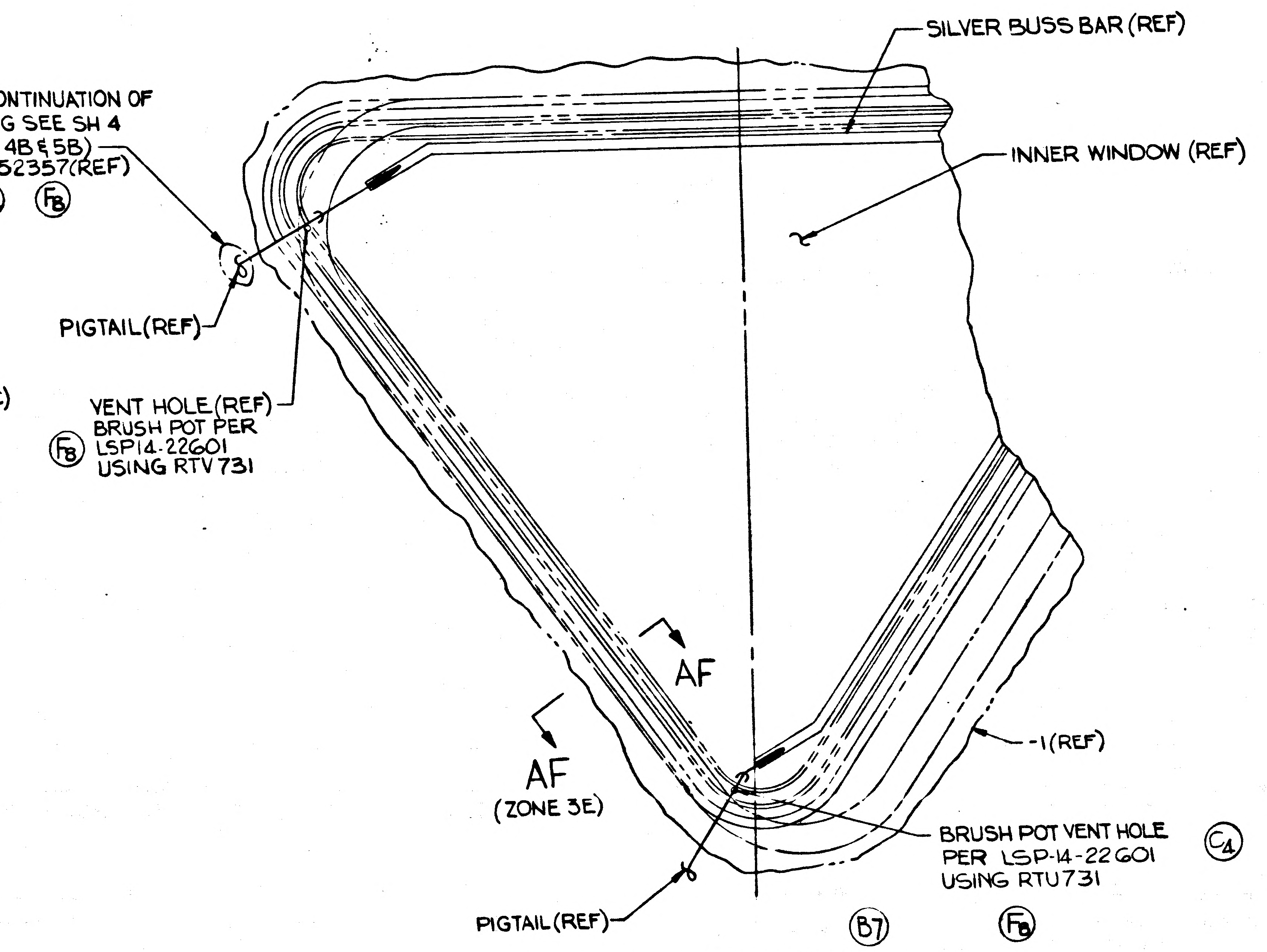
FOR CONTINUATION OF
WIRING SEE SH 4
(ZONE 4B & 5B)
LDW280-52357(REF)
(C4) (F8)
SILVER BUSS BAR(REF)
INNER WINDOW (REF)
PIGTAIL(REF)
VENT HOLE(REF)
BRUSH POT PER
LSP14-22601
USING RTV 731
(F8)
AF
AF
(ZONE 3E)
-1(REF)
BRUSH POT VENT HOLE
PER LSP-14-22601
USING RTU731
(C4)
(F8)
PIGTAIL(REF)

(B7)
FRONT FACE WINDOW
VIEW LOOKING AFT
LH SIDE SHOWN RH SIDE OPP
SCALE 1/4

MANUFACTURING OPERATIONS UNLESS OTHERWISE SPECIFIED NOTES CHECKED ✓ APPLY TO THIS DWG.	
PART NUMBER AND ALL OTHER MARKINGS IN REGION MARKED ⊠ USE BOTH SIDES IF NECESSARY.	
FILLET AND INSIDE CORNER RADII TOLERANCES .016R TO .062R ± .010 .063R TO .250R ± .015 OVER .250R ± .030	
DEPTH SHOWN FOR TAPPED HOLES IS FULL THDS. 2-3 IMP. THDS. BEYOND PERMISSIBLE	
EXTERNAL THREAD LENGTH SHOWN INCLUDES 2 IMPERFECT THREADS MAX.	
DO NOT CADMIUM PLATE & PAINT HOLES OR SURFACES MARKED WITH DOUBLE ASTERISK.	
MISMATCH STEP OF ± .005 PERMISSIBLE DUE TO CHANGE OF CUTTERS AT INSIDE INTERSECTING SURFACES.	
DIAMETERS MARKED MUST BE CONCENTRIC WITHIN FULL INDICATOR READING	
HOLES MUST BE KEPT FREE OF CHROME PLATING SOLUTION.	
ALL DIMENSIONS SHOWN TO BE MET AFTER CADMIUM PLATING THICKNESS OF PLATE .0003 MIN TO .0005 MAX. MIN THICKNESS TO BE .0002 ON THREADED AREAS. NO ALLOWANCES FOR PLATING IN HOLES	
125 √ SURFACE ROUGHNESS INCLUDING REAMED HOLES PER MIL-STD-10	
200 √ FOR ALL DRILLED HOLES	
REMOVE ALL BURRS. BREAK ALL EDGES .015-.031	
INSPECTION INFORMATION MINIMUM PERMISSIBLE AVERAGE EDGE DISTANCE MARKED IS	
SYMBOL √ DENOTES SURFACE TO BE MACHINED	
UNLESS OTHERWISE SPECIFIED TOLERANCE ON FLANGES IS ± 1/32	
LENGTHS OF AN, NAS & MS AL ALY RIVETS SHORTER THAN 1 INCH ARE NOT SPECIFIED	
TOLERANCE ON LOFTED DELINEATIONS IS	

GRUMMAN AIRCRAFT ENGRG CORP. BETHPAGE, L. I., NEW YORK
LM
MODEL OR END ITEM
SIZE E
CODE IDENT NO. 26512
LDW280-52357 F
SCALE NOTED
SHEET 12.00

LDW280-52357 F

NAS 9-1100

REVISIONS

CHANGE LTR	ITEM NO.	SHEET NO.	ZONE	GRUMMAN INFO ONLY	DET SPEC	CLASS I	CLASS II	ENGRG ORDER	DESCRIPTION	EFFECTIVITY	DISPOSITION OF EXISTING PARTS		CHANGED BY AND DATE	ENGRG APPD	GOVT APPD
											REWORK	SCRAP			
A	1	1.00							ON SH. 1.00 ADDED SHEETS 1.01, 8.00, 9.00 10.00, 11.00 SH. 1 OF 13 WAS 1 OF 8, ADDED IN M/B -3 INSTL	LM-2(32)	✓		J. CABALLERO 11/17/66		11-21-66
	2	3.00							ADDED NOTES 11, 12, 13, 14, 15 & 16. DELETED NOTES 6, 9 & 10						
	3	2.00 & 2.01						Ⓡ	ADDED -3 INSTL, QUANTITIES REQD FOR -1 & -3 INSTL, CLEANLINESS LEVEL FOR -1 & 3 INSTL., GT11FBR WAS GT11JBR & MS20995N32 WAS MS 20995F32, ADDED LDW280P16221-16 & LDW390-28015-1 DELETED GT11JBR-3-10, 73X MARKING FILM & EPON 919						
B	1	2.00, 2.01, 4.00	13B					E.O. B1	ON -1 IN FLD & B/M GB511J-04-2(11) WAS (12), AN960D4L(22) WAS AN960D8L (24), MS21042L04 (11) WAS (12), ADDED AN500AD4-10(1), AN960D4L(2), MS21042L04(1), MS20995C32-04. IN FLD ONLY ADDED (LOCKWIRE TO J236 PER MS33540).	LM-2(32)	✓		P.J MARTELLO 11/13/67		
	2	3.00						LEO280-314	ON SH 3 ADDED NOTE 17		NOT	REQD			
	3	3.00						LEO280-377	ON SH 3 ADDED NOTE 18						
	4	5.00	13A					EOB4/LCR733	ON -1 RELOCATED CLAMP "N" 180°		✓				
	5	2.00, 4.00	11C					E.O. B5	ON -1 ADDED LSC380-00602-13 WAS LDW380-00602-13		NOT	REQD			
	6	3.00 4.00	1A 1B 2C 4A 7A 7C 8B 8C 9A 9C					EO B6	ADDED NOTE 19 ON -1 ADDED SECTION V-V, Y-Y, AB-AB, U-U, W-W, AA-AA & DETAILS Z, AC & AD. ON LH SIDE, VIEW LOOKING FWD (ZONE 14B). ADDED ACCELEROMETER CABLES ON VIEW LOOKING OUTBOARD (ZONE 12C & 13C) ADDED ACCELEROMETER CABLES, LDW390-52517 & CONNECTOR NUMBERS ON SECTION L-L (ZONE 8B) ADDED LDW390-52855 & LDW390-52858 CABLE ASSYS. REVISED "P" NUMBERS, ON DETAIL C (ZONE 8B) REVISED "E" NUMBERS. ADDED VIEW LOOKING INBOARD RH SIDE, DEAD FACE SUPPORT BRACKET, VIEW LOOKING AFT LH SIDE SHOWN, RH OPP (2 PLACES), VIEW LOOKING		✓				

FOR CONTINUATION OF REVISIONS SEE SHEET 1.11

GRUMMAN AIRCRAFT ENGRG CORP, BETHPAGE, L. I., NEW YORK

SIZE	CODE IDENT NO.		
B	26512	LDW280-52357	K Ⓚ
SCALE NONE			SHEET 1.10

ENG 77.3 5-66

01

NAS 9-1100

REVISIONS

CHANGE LTR	ITEM NO.	SHEET NO.	ZONE	GRUMMAN INFO ONLY	DET SPEC	CLASS I	CLASS II	ENGRG ORDER	DESCRIPTION	EFFECTIVITY	DISPOSITION OF EXISTING PARTS		CHANGED BY AND DATE	ENGRG APPD	GOVT APPD
											REWORK	SCRAP			
B			10A 12A 12C 13A 13C 14A 14C					EO B6 (CONT'D)	DOWN DEAD FACE BRACKET, TEMP XDUCERS ON CLUSTERS I & II, LH SIDE SHOWN, RH OPP & VIEW LOOKING INBOARD AT ASCENT STAGE, TOP DECK NAV. BASE VIBRATION SYSTEM WIRING. ADDED LDW280-16064-1(2), LDW390-21748(H), LDW390-21691, LDW390-21792(C), LDW390-52627, LDW390-51777, LDW390-28627(SYSA & A) & LDW390-52628 (SYS B)	LM-2(32)	✓		P.J. MARTELLO 11/13/67		
	7	12.00						EO B7	ON-1 ADDED WINDOW WIRING INSTL & SECTIONS AE-AE & AF-AF.						
	8	4.00	6B					EO B8	ON-1 ADDED BOND PER LSP14-22500, CURE RANGE I.						
	9	4.00 7.00 2.00 2.01	13A 14A 31A 14A					EO B9 LCR880	ON-1 DELETED SECTION U-U (ZONE 4A) & VIEW LOOKING INBD RH SIDE DEAD FACE SUPPORT BRACKET (ZONE 5A). ADDED SECTION AG-AG & DETAIL AH. ON FLD & B/M ADDED: SE26XCO-1(4), SE26XCO-3(1), NAS1352-06-10P, AN960D6L, MS21042L06, NAS1351-3-10P(4), AN960D10L (4) & MS2104213(4)						
	10	2.01/4.00 6.00	14A 31A					EO B10 LCR880	REF EO B9. MIL-T-55155, 26-1 & -3 WAS SE26XCO-1 & -3, MSFC-PROC-158A & MISC-ASPO-S-5B WAS MEPS-23000-803.						
C	1	7.00	31B					EO C1	ON-1 IN F/D & B/M ADDED MS21919WDH4(2)						
D	1	4.00	13B					EO D1	ON-1 (SECTION H-H) J208 WAS J238 & J238 WAS J208.						
	2	3.00						EO D2 LEO 280-498	TO SHEET 3 ADDED NOTE 20. TO SHEET 2 ADDED: ON-1 & -3 NAS43DD3-4(AS REQD).						
	3	4.00	3A 6A				✓	EO D3	ON-1 ADDED: BOND PER LPC 280-23 (USE RTV-731 ONLY)						
	4							EO D4/LCD-1078	CANCELLED BY EO K2.						
	5	4.00	14A				✓	EO D5 LCD-880	REVISED ALL GROUND POSITIONS ON-1 INSTL. LOCATED PART LDW280-11020-11 (REF)						
	6	4.00 7.00	8B 31C				✓	EO D6 LCD-1078	ON-1 ADDED: E1003-N4 GRD(REF) RELOCATED P1534-GN7722, P1377-GB3730T, P1572-GN7723 & LDW390-52858, LDW390-52855 & LDW390-28402 (REF). ON-1 ADDED SYSTEMS "A" & "B" TO CABLE CALLOUTS AND P439, P434, P435, P440, P483 & P484.						
	7	4.00	10A 10C 10B				✓	EO D7 LCD-1078	ON-1 ADDED: LDW390-51721, LDW390-52858, LDW390-21983(REF) TO FIELD. RELOCATED P122, ACCELLEROMETER WIRING LDW390-28983, LDW390-28402, LDW390-52855, LDW390-52858. REMOVED ACCELLEROMETER WIRING FROM P122						

CHG APPROVED

LTR	GROUP LDR	VDI			STRUCTURES	STRUCTURES			PROJECT	RELEASE

FOR CONTINUATION OF REVISIONS SEE SHEET 1.12

GRUMMAN AIRCRAFT ENGRG CORP, BETHPAGE, L. I., NEW YORK

SIZE	CODE IDENT NO.		
B	26512	LDW280-52357	K Ⓡ
SCALE	NONE		SHEET 1.11

ENG 77.3 5-65

01

NAS 9-1100

REVISIONS

CHANGE LTR	ITEM NO.	SHEET NO.	ZONE	GRUMMAN INFO ONLY	DET SPEC	CLASS I	CLASS II	ENGRG ORDER	DESCRIPTION	EFFECTIVITY	DISPOSITION OF EXISTING PARTS REWORK	DISPOSITION OF EXISTING PARTS SCRAP	CHANGED BY AND DATE	ENGRG APPD	GOVT APPD
D	8	4.00	10B 10C				✓	EO D8 LCD-1078	RELOCATED LDW390-21904(REF). ADDED LSC380-00602-13, "C" LDW390-21792(REF) SYS A & B. RELOCATED LDW390-52628, LDW390-21885, LDW390-21792, LDW390-28607, LDW390-21692, LDW390-21651, LDW390-21650, LDW390-21880(REF).	LM-2(32)	✓		P.J. MARTELLO 11/13/67		
	9	4.00	3A 3B 6A				✓	EO D9 LCD-1078	ADDED PIGTAIL WIRING FROM CL I, SYS A & B, PICTURE TO F/D CLAMPING TO BE IN ACCORDANCE WITH LPC280-23. RELOCATED CLAMPING ON J172, J173, J174 & N3 GRD GT11JBR-3-10(1) FROM J173.						
	10	2.00 10.00	57B 60B				✓	EO D10 LCD-1078	ON-3 INSTL: LDW280P16224-13 & -14 (1 EACH) WAS LDW280P16224-11 & -12 (1 EACH)						
E	1	3.01 9.00	47B				✓	EO E1	ON-3: PANEL XII PIGTAILS (SEE NOTE 21) WAS PANEL XII PIGTAILS ADDED NOTE 21.						
	2						✓	EO E2 LCD-1078	IN FIELD OF EO (REF EO D6): GN7723 S/B GB GB3022 & P1538 S/B P1548.						
	3	4.00 7.00	8C 32B			✓		EO E3/CCA553 LCD 1069	CANCELLED BY EO E6						
	4	2.01, 3.01 10.00	57B 60B			✓		EO E4 LCD1288A	ON-3 INSTL, DELETED MS17821-4-9(70) & LDW280-28362-1(2) ADDED: LDW280-28362-9(2), GT835AM-1(AS REQD) & NOTE 22.						
	5	4.00	3A 10A				✓	EO E5/LCD-1306	CANCELLED BY EO F10						
	6	4.00 7.00	8C 32B			✓		EO E6/CCA553 LCD-1069	CANCELS EO E3						
	7	2.02 3.02 6.00	24A 25A 26A				✓	EO E7 LCD-1030	ON-1 INSTL, ADDED LDW280M16125-1-1(4), LDW280M16144-11(4), NAS1133-V3(4), MS21042L3(4), LDW280P16242-11, GT835E8(AS REQD), GT535V-8 (AS REQD) LDW280P11580-11, GB511J-08-3(2), AN960D8L(4), MS21042L08(2), LDW280-16042-1, LDW280-16042-3, GB511J-3-2(2), AN960D10L(8), MS21042L3(3), LDW280M10983-1, MS21919WH16, NAS213D3-64, MS21919WH27. ADDED NOTES: 23, 24, 9 & ADDED SECTIONS AH, AJ, AK.						
	8	2.02 3.02 4.00	6A				✓	EO E8/CCA553 LCD-1069	ON-1 INSTL, ADDED ROUTING & CALLOUTS FOR CABLE ASSYS LDW390-51921(E2)(REF), LDW390-51987(E2)(REF), LDW390-51625(E2)(REF), LDW390-51616(E2)(REF), LDW390-51624(E2)(REF), LDW390-						

CHG APPROVED								
LTR	GROUP LDR	VDI			STRUCTURES	STRUCTURES	PROJECT	RELEASE

FOR CONTINUATION OF REVISIONS SEE SHEET 1.13

GRUMMAN AIRCRAFT ENGRG CORP, BETHPAGE, L. I., NEW YORK

SIZE	CODE IDENT NO.		
B	26512	LDW280-52357	K
SCALE NONE		SHEET 1.12	

ENG 77.3 5-65

01

NAS 9-1100

REVISIONS

CHANGE LTR	ITEM NO.	SHEET NO.	ZONE	GRUMMAN INFO ONLY	DET SPEC	CLASS I	CLASS II	ENGRG ORDER	DESCRIPTION	EFFECTIVITY	DISPOSITION OF EXISTING PARTS REWORK	DISPOSITION OF EXISTING PARTS SCRAP	CHANGED BY AND DATE	ENGRG APPD	GOVT APPD
E		6.00	22C 22B					EOE8 (CONT'D)	-51615 (E2)(REF) & LOCKWIRE PER MS33540 (TYP 9 PLACES), LSC320-320-1(6). ADDED NOTES 25 & 26 & ADDED DETAIL AL & SECTION AM & AN.	LM-2(32)	√		P.J. MARTELLO 11/13/67		
	9	4.00	9B				√	EOE9/LCD-1016	ON-1 INSTL, ADDED E7145, E7146 & SPLICE AREA LOCATION						
	10	4.00	9B				√	EOE10/LCD-1694	ON-1 INSTL, ADDED E7906, E7907 & GT11J-BR-08-12						
F	1	9.00	46A				√	EOF1 LCD1078	ON-3 INSTL, ADDED PICTURE OF CLAMP & RELOCATED PICTURE OF AUX SWITCHING RELAY BOX & LDW280-11568(REF)						
	2	2.01 8.00	37A 41A				√	EOF2 LCD1306	ON-3 INSTL, IN PLAN VIEW "A" & PLAN VIEW "B" & FRONT FACE & SIDE VIEW "A" & SIDE VIEW "B" - REROUTED CABLES & ADDED & DELECTED CODING ON CABLE ASSYS (EXAMPLE - A-CE1B). IN VIEW FRONT FACE, ADDED E1462, E1463 & NAS43DD3-48(2). IN PLAN VIEW "A", ADDED E1505, E1506, E1464, E1465, E3784, E3786, E3788 & E3790.						
	3	3.02 4.00	8B				√	EOF3	ON-1 INSTL, ADDED NOTE 27 & COLOR CODE REF TO F/D.						
	4	4.00	12C 13C			√		EOF4 LCD1291	ON-1 INSTL, ADDED S7240, S7241, S7242 & S7243 (REF) FROM R&R ANT (REF), TO GN7721T & GN7722T (REF)						
	5	4.00 8.00 9.00 10.00	10B 37B 41B 46A 50B 56B			√		EOF5 LCD1694	ON-1 INSTL, ADDED TO EXISTING CALLOUTS: LDW390-52699(A), LDW390-52771(A). ADDED SPLICES: E7908 THRU E7916, E7900, E7899, E7898, E7897, E7901, E7902 (REF)						
	6	2.01 9.00	50B				√	EOF6 LCD1552	ON-3 INSTL, ADDED GB511J-08-2(2), AN960D8L(4) & GN512CF-08C(2)						
	7	3.02 4.00	8B				√	EOF7	(REF EOF3) ON-1 INSTL, REVISED NOTE 27 - "#403-D10 COLOR RED" S/B "#401-D10 COLOR RED"						
	8	12.00	ALL				√	EOF8 LCD1078	ON-1 INSTL, IN SECTION AF-AF, AE-AE. RTV731 WAS POTTING TABLE I WAS TABLE II. ADDED INNER WINDOW (REF) & USE EPON 934. FRONT FACE WINDOW, ADDED BRUSH POT PER LSP14-22601 USING RTV731. REMOVED ALTERNATE MAT USE EC1663 A/B PER LSM14-4015 USE PER LSP14-14201 TYP 2 PLACES. VIEW LKG INBD, ADDED "USE EPON 934 (REF)" TO PT "B" USING RTV731. TABLE I REF WAS TABLE II, LSP14-22601 WAS LSP14-14201.						

CHG APPROVED: LTR GROUP LDR | VDI | STRUCTURES | STRUCTURES | PROJECT | RELEASE

FOR CONTINUATION OF REVISIONS SEE SHEET 1.14

ENG 77.3 5-65

GRUMMAN AIRCRAFT ENGRG CORP, BETHPAGE, L. I., NEW YORK

SIZE	CODE IDENT NO.		
B	26512	LDW280-52357	K

SCALE NONE SHEET 1.13

01 NAS 9-1100

REVISIONS

CHANGE LTR	ITEM NO.	SHEET NO.	ZONE	GRUMMAN INFO ONLY	DET SPEC	CLASS I	CLASS II	ENGRG ORDER	DESCRIPTION	EFFECTIVITY	DISPOSITION OF EXISTING PARTS		CHANGED BY AND DATE	ENGRG APPD	GOVT APPD
											REWORK	SCRAP			
F	9	2.02 8.00	 37A			✓		EOF9 LCD1510	ON-3 INSTL, IN PLAN VIEW "A", REROUTED CABLES, ADDED CODING ON CABLE ASSYS (EXAMPLE-A-CE1A) & ADDED NAS43DD3-48(2)	LM-2(32)	✓		P.J MARTELLO 11/13/67		
	10	4.00	3A				✓	EOF10/LCD1306	CANCELLS EOE5						
G	1	4.00	3A 6A 10A				✓	EOG1 LCD1306	ON-1 INSTL, ADDED LDW390-28627(A-CR1B)(REF), LDW390-28627 (A-CR2B)(REF), LDW390-28958(A-CR3B)(REF), LDW390-28958 (A-CR3A)(REF), LDW390-28958(A-C$1B)(REF), LDW390-52630 (A-CR3B)(REF), LDW390-52630(A-CR3A)(REF), LDW390-52855 (A-CMD1B)(REF), LDW390-52601(A-CMD1A)(REF), LDW390-52951 (C-C$1A)(REF), LDW390-52629(A-CR3A)(REF), LDW390-52629 (A-CR3B)(REF). DELETED: LDW390-52951. RELOCATED CALLOUT IN F/D FOR SECTION N-N.						
	2	2.01 8.00 9.00 10.00	 37A 45B 56A				✓	EOG2 LCD1594	ON-3 INSTL, ADDED GB511J-04-2(8), AN960D4L(16), MS21042L04(8) IN PLAN VIEW "A", SIDE VIEW "A" & VIEW +Z27 BULKHEAD, REROUTED CABLES, ADDED & DELETED CODING ON CABLE ASSYS (EXAMPLE-A-(E,B). IN SIDE VIEW "A"- ADDED E7193, E7194, E7195, E7196, E7299, E7300, E7301, E7302 & RECEPTICAL P714.						
	3	2.01 8.00 9.00	 37A 41A 50A			✓		EOG3 LCD1481 CCA598 LCD1606	ON-3 INSTL: PLAN VIEW "A" ADDED CALLOUT LDW390-21767(B) AT J88. AT PLAN VIEW "B", ADDED CALLOUTS FOR J1425(REF), J1426(REF), J1427(REF), J1428(REF) & ASSOCIATED MOUNTING HARDWARE-GB511J-04-2(16), AN960D4L(32) & MS21042L04(16) RESPECTIVELY. ADDED CALLOUTS FOR SPLICE AREAS E7841 THRU E7847, E7861, E7854, E7855, E3574, E3584, E7839, E7840 & E7848 THRU E7853(REF). ADDED CABLE ASSEMBLY CALLOUTS LDW390-21762(E), LDW390-21897(A), LDW390-21935(E) & LDW390-21758(B) AT J1425. LDW390-21762(E) & LDW390-21971(E) AT J1426, LDW390-21894(A) AT J1427, LDW390-21894(A) AT J1428 & LDW390-21935(E) AT J748. AT VIEW FRONT FACE LOOKING FWD, ADDED CALLOUTS FOR SPLICE AREAS E3446, E3589, E7837 & E7838(REF), P1425 & P1427 PANEL IVA PIGTAILS(REF), P1426 & P1428 PANEL IVB PIGTAILS(REF), PANEL IVA(REF) & PANEL IVB(REF). DELECTED J62(REF) & CABLE ASSY LDW390-21758(H), LDW390-21767(E,H) & GB511J-04-2(4), AN960D4L(8), MS21042L04(4).						

CHG APPROVED									
LIN GROUP LDR	VDI			STRUCTURES	STRUCTURES			PROJECT	RELEASE

FOR CONTINUATION OF REVISIONS SEE SHEET 1.15

GRUMMAN AIRCRAFT ENGRG CORP, BETHPAGE, L. I., NEW YORK

SIZE	CODE IDENT NO.		
B	26512	LDW280-52357	K ⓚ

SCALE NONE

SHEET 1.14

ENG 77.3 5-65

01

NAS 9-1100

REVISIONS

CHANGE LTR	ITEM NO.	SHEET NO.	ZONE	GRUMMAN INFO ONLY	DET SPEC	CLASS I	CLASS II	ENGRG ORDER	DESCRIPTION	EFFECTIVITY	DISPOSITION OF EXISTING PARTS REWORK	DISPOSITION OF EXISTING PARTS SCRAP	CHANGED BY AND DATE	ENGRG APPD	GOVT APPD
G	4	2.01 3.02 4.00	3A 3C 11C 14C				√	EOG4 LCD1722	ON-1 INSTL, ADDED: MS21266-2N, NAS43DD3-64(2), NAS43DD4-32, VIEW LKG OUTBD LH IMU BEAM, SECTION AP, AR, AS & AT & NOTE 28, LDW390-21651(H)(REF), LDW390-28607(A)(REF), LDW390-21651(A,B,C)(REF), LDW390-21651(E,G,H)(REF), LDW390-21499 (H)(REF), LDW390-21918(H)(REF), LDW390, 21608 (F)(REF), LDW390-21980(H)(REF), LDW390-21874(F)(REF), LDW390-21880(B,F,H)(REF), LDW390-21885(F)(REF), LDW390-52517(C)(REF), LDW390-52945(H)(REF). DELETED: GB511J-08-20(6), AN960D8L(12), MS21042L08(6), NAS43DD4-64(6), VIEW LKG OUTBD LH SIDE, SECTION J-J, SECTION AA-AA & NOTE 11. REROUTED: LDW390-21874(H)(REF), LDW390-28607(H)(REF), LDW390-52674(H)(REF), LDW390-52691(H)(REF), LDW390-21880(H)(REF), LDW390-52858(H)(REF), LDW390-28607(F)(REF), LDW390-21608(F)(REF), LDW390-52675(F)(REF), LDW390-21880(F)(REF), LDW390-21874(F)(REF), LDW390-21885(F)(REF), LDW390-21748(D)(REF).	LM-2(32)	√		P.J. MARTELLO 11/13/67		
	5	4.00	3A 10A				√	EOG5 LCD1306	(REF EOG1) (ON-1) REROUTED LDW390-52630(A-CR3A)(REF), LDW390-28958(A-CR3A)(REF) & LDW390-52601(A-CMD1A)(REF)						
	6	8.00 9.00 10.00	37A 41A 46A 51A 59A			√		EOG6 LCD 1752	ON-3 INSTL: IN PLAN VIEW "A" - LOOKING DOWN - TOP OF CABIN SKINS REMOVED. ADDED TO EXISTING ROUTING: LDW390-21935, LDW390-52812, LDW390-21893, LDW390-52899, LDW390-21971, LDW390-28790, LDW390-21767. IN PLAN VIEW "B" ADDED TO EXISTING ROUTING: LDW390-21893, LDW390-21935, LDW390-21767. ADDED: E1450, E1451 SPLICE(REF). IN VIEW + Z27 BHD (LOOKING AFT) ADDED TO EXISTING ROUTING: LDW390-21893. VIEW FRONT FACE (LOOKING FWD) ADDED: TO EXISTING ROUTING LDW390-21935, LDW390-52899, LDW390-21971, LDW390-28790, LDW390-21767, LDW390-21893, LDW390-52812. ADDED E3859, E3860(SPLICE)(REF). IN SIDE VIEW "B" ADDED TO EXISTING ROUTING: LDW390-21893(B)						
	7	8.00	37B			√		EOG7 LCD1855	ON-3 INSTL, ADDED: SPLICE E8100(REF) & CALLOUTS LDW390-52653(A)(REF), LDW390-52822(A,C)(REF). DELETED: LDW390-28822(A,C)(REF)						

CHG APPROVED	LTR	GROUP LDR	VDI			STRUCTURES	STRUCTURES			PROJECT	RELEASE

FOR CONTINUATION OF REVISIONS SEE SHEET 1.16

GRUMMAN AIRCRAFT ENGRG CORP, BETHPAGE, L. I., NEW YORK

SIZE	CODE IDENT NO.		
B	26512	LDW280-52357	K
SCALE NONE		SHEET 1.15	

Ⓚ

ENG 77.3 5-65

01

NAS 9-1100

REVISIONS

CHANGE LTR	ITEM NO.	SHEET NO.	ZONE	GRUMMAN INFO ONLY	DET SPEC	CLASS I	CLASS II	ENGRG ORDER	DESCRIPTION	EFFECTIVITY	DISPOSITION OF EXISTING PARTS REWORK	DISPOSITION OF EXISTING PARTS SCRAP	CHANGED BY AND DATE	ENGRG APPD	GOVT APPD
G	8	2.01 8.00	37B 33A			✓		EOG8 CCA587 LCD1507	ON-3 INSTL, ADDED: LDW390-21752(A)(REF), P810(REF), E7967 (REF), E7968(REF), UTILITY LIGHT SW ASSY (16A10)(REF), NAS43DD3-64. DELETED PICTURE OF CLAMPS & REROUTED CABLE. ADDED SECTION AU-AU.	LM-2(32)	✓		P.J. MARTELLO 11/13/67		
	9	2.01 3.02 6.00 8.00	24A 35B			✓		EOG9 LCD1784	ON-3 INSTL, ADDED: VIEW AV-AV, NOTE 29 & DETAIL AW. DELETED: GB511J-04-2(12), AN960D4L(24), MS21042L04(12) & NOTES 3,4 & J56(REF), J57(REF) & J88(REF).						
	10	2.00 4.00	4B				✓	EOG10	ON-1 INSTL, ADDED LDW280P16221-19 IN F/D & BM TO SECTION E-E & VIEW LKG INBD LH SIDE.						
H	1	2.01 6.00 7.00	 23A 23B 23C ALL				✓	EOH1 LCD1675	ON-1 INSTL, ADDED LDW390-52201-1(5), GB511J-08-12(5), AN960D8L(35), MS21042L08(30), GB511J-3-6(12), AN960D10C (24), MS21042L3(12), N4 GROUNDS, J172(REF), J173(REF), J174 (REF), P172(REF), P173(REF), P174(REF). DELETED: SH 7.00, WHICH INCLUDED (VIEW LKG FWD) & (VIEW D-D) & (INTERRUPTER & LINES INSTL DWG, ¢ INTERRUPTERS)(REF). DELETED: DETAIL AH & SECTION AG-AG.						
	2	2.00/2.01 4.00 6.00	8C 23B				✓	EOH2 LCD 1078	ON-1 INSTL, ADDED: LDW390-52201-1(2), GB511J-08-11(2), AN960D8L(14), MS21042L08(12), N4 GROUNDS. DELETED: VIEW LKG DOWN, DEAD FACE BRACKET.						
	3	2.00 4.00	4B				✓	EOH3	ON-1 INSTL - LDW280P16221-31 WAS LDW280P16221-19						
	4	4.00	3A				✓	EOH4	ON-1 INSTL, LH SIDE VIEW LKG INBD - REMOVED CLAMPS (4) & ADDED STRUCTURAL BOND (3) PLACES						
	5	4.00	3A				✓	EOH5	ON-1 INSTL, ADDED CLAMP PER LPC280-23						
	6	2.02 5.00	18B				✓	EOH6 LCD2018	ON-1 INSTL, IN F/D ADDED CALLOUT P/N 6010678, IN B/M ADDED P/N 6010678 WAS P/N 6010660						
	7	2.01 8.00 10.00	40B 56A			✓		EOH7 LCD1078	(REF EOG3) ON-3 INSTL, REVISED ROUTING OF CABLES & EXPANDED SPLICE AREA (REF EOF2). ON-3 INSTL IN F/D & B/M DELETED NAS43DD3-40 SPACER & REVISED ROUTING.						
	8	8.00 9.00	37A 50A			✓		EOH8 LCD1978	ON-3 INSTL, ADDED ROUTING FOR REF CABLE ASSY WIRES LDW390-21664(A-C$2B) & LDW390-52523(A-C$2A)(REF)						

CHG APPROVED LTR	GROUP LDR	VDI			STRUCTURES	STRUCTURES			PROJECT	RELEASE

FOR CONTINUATION OF REVISIONS SEE SHEET 1.17

GRUMMAN AIRCRAFT ENGRG CORP, BETHPAGE, L. I., NEW YORK

SIZE	CODE IDENT NO.		
B	26512	LDW280-52357	K

SCALE NONE SHEET 1.16

ENG 77.3 5-65

01

NAS 9-1100

REVISIONS

CHANGE LTR	ITEM NO.	SHEET NO.	ZONE	GRUMMAN INFO ONLY	DET SPEC	CLASS I	CLASS II	ENGRG ORDER	DESCRIPTION	EFFECTIVITY	DISPOSITION OF EXISTING PARTS: REWORK	DISPOSITION OF EXISTING PARTS: SCRAP	CHANGED BY AND DATE	ENGRG APPD	GOVT APPD
H	9	8.00 10.00 2.01	37C 41C 56B				✓	EOH9 LCD1078	ON-3 INSTL, ADDED: LDW390-21765(A)(REF) & CREW OPTICAL ALIGN SIGHT(REF). ADDED E6874(N4)(REF) & E6873(N4)(REF) & SPLICE AREA E6869, E6870, E6871, E6872(REF). IN F/D & B/M ADDED: GT11J-BR08-10(2).	LM-2(32)	✓		P.J. MARTELLO 11/13/67		
	10	8.00	37B			✓		EOH10 LCD 1594 Ⓒ	ON-3 INSTL, PLAN VIEW "A", RELOCATED J155 CONNECTOR & DELETED J88 CONNECTOR.						
J	1	8.00	40B			✓		EOJ1 LCD 2005	CANCELLED BY EOJ10						
	2	2.01 10.00	56B			✓		EOJ2 LCD1965/CCA651	ON-3 INSTL, ADDED GC500AC-14, GC500AC-2, GB511J-08-3, AN960D8L(2) & MS21042L08						
	3	9.00	50B			✓		EOJ3 LCD1481/CCA598	ON-3 INSTL, RELOCATED GT11J-BR08-10 WAS GT11F-BR-08-12, RELOCATED J&P 706B. ADDED CLAMP & SECTION AY.						
	4	4.00	6A				✓	EOJ4	ON-1 INSTL, MOVED CLAMP & REROUTED CABLE TO J173 AS INDICATED. ADDED DIM (1.906-1.875) DRILL NO.19 (.165-.171).						
	5	4.00	3A 6A 10A			✓		EOJ5 LCD 1978	ON-1 INSTL, ADDED LDW390-21828(E)(REF), LDW390-52687(A-C$2A)(REF), LDW390-52688(A-C$2B)(REF): (REF EOB6) DELETED: VIEW LKG INBD RH SIDE DEADFACE SUPT BRKT & SECTION E-E.						
	6	6.00	23B				✓	EOJ6	(REF EOH1) (ON-1 INSTL) REIDENTIFIED CABLE ASSY ROUTING & PLUG LOCATION.						
	7	3.02 8.00	38B				✓	EOJ7	ON-3 INSTL, ADDED VIEW AZ & NOTE 30 & COLOR CODE REF TO F/D.						
	8	2.01 9.00	50B			✓		EOJ8 LCD2126/CCA409	ON-3 INSTL, ADDED ROUTING OF PANEL 4A & 4B PIGTAILS. ADDED NAS43DD3-48.						
	9	8.00	35B				✓	EOJ9 LCD1784	(REF EOG9) ON-3 INSTL - IN VIEW AV-AV, RELOCATED N4 GROUNDS ON J56, J57 & J88.						
	10	8.00	40B			✓		EOJ10 LCD2005 Ⓒ	CANCELLED EOJ1						
K	1	9.00 10.00	50B 51B 56C				✓	EOK1 LCD 1078	ON-3 INSTL, DELETED TAPE DESIGNATION. ADDED SPLICE AREA & SPLICE NUMBERS. ADDED BONDING TO TRANSDUCER CABLES & TO LIGHT PIGTAILS. ADDED TRANSDUCER(REF) CALLOUTS & WINDOW TEMP TRANSDUCER & REF CALLOUT. ADDED CABLE CALLOUT & BONDING DESIGNATION. ADDED SPLICE AREA & SPLICE NUMBERS.						
	2					✓		EOK2 LCD 2229	CANCELLED EOD4						

CHG APPROVED	GROUP LDR	VDI			STRUCTURES	STRUCTURES			PROJECT	RELEASE

FOR CONTINUATION OF REVISIONS SEE SHEET 1.18

GRUMMAN AIRCRAFT ENGRG CORP, BETHPAGE, L. I., NEW YORK

SIZE	CODE IDENT NO.		
B	26512	LDW280-52357	K Ⓚ
SCALE NONE			SHEET 1.17

ENG 77.3 5-65

01

NAS 9-1100

REVISIONS

CHANGE LTR	ITEM NO.	SHEET NO.	ZONE	GRUMMAN INFO ONLY	DET SPEC	CLASS I	CLASS II	ENGRG ORDER	DESCRIPTION	EFFECTIVITY	DISPOSITION OF EXISTING PARTS		CHANGED BY AND DATE	ENGRG APPD	~~GOVT~~ APPD
											REWORK	SCRAP			
K	3	2.01 8.00	37B			√		EOK3 LCD 1507	ON-3 INSTL (REF EOG8) DELETED CLAMP (A-C02A & A-CE1A). RELOCATED (A-C02A & A-CE1A). ROTATED G & H CLAMP 180°. ADDED NAS43DD3-48(2) & NAS43DD3-56(2)	LM-2(32)	√		P.J. MARTELLO 11/13/67		
	4						√	LCD 1078	CREATED -7 & -9. DELETED -1 & -3			√-1,-3			
	5	9.00	53A						REMOVED SECTION AY-AY		√				
	6							B•C•D•E•F•G•H•J•K Ⓚ	SHEET 1 OF 24 WAS SHEET 1 OF 14. ADDED SHEETS 1.11, 1.12, 1.13, 1.14, 1.15, 1.16, 1.17, 1.18, 2.02, 3.01, 3.02. DELETED SHEET 7.00. LAST SECTION LETTER USED AZ WAS U.		NOT	REQD			

FOR CONTINUATION OF REVISIONS SEE SHEET ______

ENG 77.3 5-65

GRUMMAN AIRCRAFT ENGRG CORP, BETHPAGE, L. I., NEW YORK

SIZE	CODE IDENT NO.		
B	26512	LDW280-52357	K Ⓚ
SCALE NONE		SHEET 1.18	

01

NAS 9-1100

NOTES:

1. COMMERCIAL PART SEE SPEC. CONTROL DWG. BEFORE ORDERING.
2. ALL CONNECTOR NUMBERS SHALL BE PLACED ON STRUCTURE ADJACENT TO THE RESPECTIVE CONNECTOR PER LSP 14-002, TYPE VII, CLASS 2, MARK WITH 3/16 HIGH LETTERS.
3. ~~PRIOR TO ASSEMBLY OF GT11F TERMINAL INSTALLATION, FINISH STRUCTURE IN ACCORDANCE WITH LSP390-001 PARA. 3.10.~~
4. ~~AFTER ASSEMBLY OF THE GT11F TERMINAL INSTALLATION AND THE ADDITION OF ALL TERMINAL LUGS REQUIRED, BRUSH COAT THE ENTIRE ASSEMBLY PER LSP14-14201(EPON 919) ALL SURFACES TO BE CLEANED PER LSP14-7011 PRIOR TO COATING.~~
5. SPECIFICATION LSP390-002 SHALL BE USED IN CONJUNCTION WITH THIS INSTALLATION.
6. ~~STAGGER ALL SPLICES FOR CLUSTERS IN THIS AREA.~~
7. ALL LDW390 CABLE ASSEMBLY NUMBERS ARE FOR REFERENCE ONLY, EXCEPT LDW390-52014.
8. FOR THE INSTALLATION OF HARNESS "B" SEE LDI280-002 PARA. 4:2.
9. ~~STAGGER ALL SPLICES FOR ISOLATION VALVES IN THIS AREA.~~
10. ~~FOR HARDWARE ON ZONE BOXES SEE DWGS. LDW280-28296 AND LDW280-21266.~~
11. ~~SELECTION AND INSTALLATION OF LINE CLAMPS TO BE IN ACCORDANCE WITH LPC 280-23 EXCEPT AS NOTED. MS21919 CLAMPS WILL BE USED IN PLACE OF THE GC500S CLAMPS.~~
12. GROUND ALL N3 AND N4 GROUND WIRES TO CLOSEST GROUND STUD FROM CONNECTORS.
13. SUBSTITUTION OF NAS 1132-*, AN 525-832R* AND AN525-832-* FOR THE GB511J-08-* BOLT IS PERMISSIBLE.
14. TAPING PROCEDURE:

    A. WIPE VEHICLE SURFACE AND WIRE WITH ISOPROPYL ALCOHOL.
    B. APPLY H FILM TAPE 3M CORP. 3M x 1156 1" WIDE.
15. LOCKWIRE CONNECTORS P172, P173 & P174 PER MS33540. USE MS20995NC32 LOCKWIRE.
16. ALL RECEPTACLES MOUNTED IN ACCORDANCE WITH THIS DWG. ARE TO HAVE KEYWAYS POSITIONED IN THE +X OR +Z DIRECTION.
17. SUBSTITUTION OF NAS1132V, AN525-832R OR AN525-832 BOLTS FOR THE GB511J-08 BOLT IS PERMISSIBLE.
18. MS21919WDH CLAMPS & GL500S CLAMPS ARE INTERCHANGEABLE & EITHER MAY BE USED IN THIS INSTL.
19. INSTALLATION PROCEDURE OF HEATER WIRING (DOCKING WINDOW):
    A. INSTALL PIGTAILS PER SHEET 12 AND STOP AT POINT "B".
    B. AFTER THE THERMO BLANKET IS INSTALLED ATTACH THE WIRING TO A LACING PIN & FEED THE WIRING THROUGH THE BLANKET (1 HOLE SHOULD BE REQUIRED FOR EACH PIGTAIL).
    C. WHILE THE OUTER FIBERGLASS CASE IS OFF, FEED THE LINES THROUGH THE VENT HOLE & STOW TILL THE CASE IS PUT IN PLACE.
    D. AFTER THE FIBERGLASS CASE IS INSTALLED POT THE VENT HOLE MAKING SURE THAT THE POTTING COMPOUND SEEPS THROUGH TO THE OPPOSITE SIDE OF THE VENT HOLE.
20. WHERE LINE CLAMPS (MS21919 OR GC500S) CAN BE DEFORMED OR CANNOT LIE FLAT ON BACKUP STRUCTURE, BECAUSE OF PROTRUDING RIVET HEADS, A SPACER (NAS43DD3-4) IS TO BE BONDED TO THE BACKUP STRUCTURE DIRECTLY OVER THE MOUNTING HOLE. THE SPACER SHOULD LIE BETWEEN THE BACKUP STRUCTURE & LINE SUPPORT CLAMP. BOND SPACER IN PLACE WITH EPON 934, CURE RANGE I OR II, IN ACCORD WITH LSP 14-22500. CLEAN IN ACCORD WITH LSP 14-7022.

GRUMMAN AIRCRAFT ENGRG CORP., BETHPAGE, L. I., NEW YORK			
SIZE B	CODE IDENT NO. 26512	LDW280-52357	K
SCALE ~		SHEET 3.00	

ENG 72.1 6-64

01

NAS 9-1100

NOTES: (CONTINUED)

21. ABOVE EACH CONNECTOR IDENTIFICATION NUMBER PAINT 1/4" X 1/2" RECTANGLE USING DESIGNATED COLOR COMBINATIONS AS SHOWN IN TABLE 1 BELOW:

TABLE 1

CONNECTOR	COLOR	
J1104	BLK | YEL	3M SERIES 400 VELVET COATING P/N 401-C10 & 401-F1 (PER LSP-14-4503.)
J1110	WHITE	3M SERIES 400 VELVET COATINGS P/N 401-A10 (PER LSP-14-4503.)
J1119	ORANGE	73X ORANGE INK (PER LSP-14-002)
J1126	ORN | BLK	BLK -3M SERIES 400 VELVET COATING P/N 401-C10 (PER LSP-14-4503) 73X ORANGE INK (PER LSP-14-002)
J1116	YELLOW	3M SERIES 400 VELVET COATING P/N 401-F1 (PER LSP-14-4503)
J1123	BLK | WHT	3M SERIES 400 VELVET COATING P/N 401-C10 & 401-A10 (PER LSP-14-4503)
J1113	GRAY | WHT STRIPE	3M SERIES 400 VELVET COATING P/N 401-B2 & 401-A10 (PER LSP-14-4503 - EXCLUDING PARA. 3.1.1, 4.2.2, 3.4.5 AND 4.2.3).
J1103	BLACK	3M SERIES 400 VELVET COATING P/N 401-C10 (PER LSP-14-4503)

22. LACING TAPE (GT835AM-1) TO BE USED TO SECURE WIRE BUNDLES TO STRAP ASSYS LDW280-28362-9. PASS TAPE THROUGH EYELET IN STRAP ASSY ON ONE SIDE OF WIRE BUNDLE, LOOP TAPE COMPLETELY AROUND WIRE BUNDLE ONCE & PASS TAPE THROUGH EYELET ON OPPOSITE SIDE OF WIRE BUNDLE. TIE TAPE WITH AN OVERHAND KNOT WITH A TRIPLE BEND.

23. CUSHION TO BE MADE FROM 1/16 x 1 x 8 SPONGE RUBBER SHEET CELL CHEM BROWN TYPE II GRADE A MED. PER MIL-R-6130 MATERAIL TO BE BONDED USING TYPE II ADHESIVE PER LSP14-22601 (RTV-731).

24. a. WRAP UMBILICAL BUNDLE WITH ETCH TEFLON TAPE (LDW280P16242-11), OVERLAPPING 3-4 INCHES.
    b. SHAPE BUNDLE FOR PASSAGE CLEARANCE THRU GUILLOTINE.
    c. WRAP EXPOSED ETCHED PORTION OF TELFLON TAPE WITH GT835E8 TAPE (DOUBLE-BACKED TAPE)
    d. PLACE LAYER OF GT535V-8 TAPE OVER DOUBLE BACKED TAPE.
    e. PLACE LAYER OF GT835E8 TAPE OVER STEP (d) TAPE.
    f. PLACE CLAMPS OVER DOUBLE BACKED TAPE & TIGHTEN.

GRUMMAN AIRCRAFT ENGRG CORP., BETHPAGE, L. I., NEW YORK

SIZE B | CODE IDENT NO. 26512 | LDW280-52357 | K (K)

SCALE | SHEET 3.01

LDW280-52357 M

MODEL OR END ITEM	NEXT ASSY	MODULE OR SER NO.	REQD PER MODULE OR END ITEM
LM	LDW280-52000	LM-2(32)	1
PART NO. LDW280-52357-5		GAEC SCH NO. 30	

MODEL OR END ITEM	NEXT ASSY	MODULE OR SER NO.	REQD PER MODULE OR END ITEM
LM	LDW280-52001	LM2(32)	1 EA
PART NO. LDW280-52357-7&9		GAEC SCH NO. 30	

MODEL OR END ITEM	NEXT ASSY	MODULE OR SER NO.	REQD PER MODULE OR END ITEM
PART NO.		GAEC SCH NO.	

TO BE REDRAWN ON PRODUCTION FORMAT ⑤

SH REV STATUS: FOR DESCRIPTION OF REV SEE SUBQ SH 1.01

SHEET	1.00	1.10	1.11	1.12	1.13	1.14	1.15	1.16	1.17
REV	M	K	K	K	K	K	K	K	K
SHEET	1.18	1.19	2.00	2.01	202	3.00	3.01	3.02	
REV	K	M	M	M		K		M	
SHEET	4.00	5.00	6.00	~~7.00~~	8.00	9.00	10.00	11.00	12.00
REV	M	M	M		M	M	M	A	F

LAST SECT LTR USED	BC	GRUMMAN REL INFO M	
LAST DASH NO. USED	-9	PRIM NO.	JK(012)
		420	MP-101-1/27/8

UNLESS OTHERWISE SPECIFIED DIMENSIONS ARE IN INCHES.
TOLERANCE UNLESS SPECIFIED
FRACTIONS - DECIMALS - ANGLES
~ ~ ~

ORIG DWG AUTH

DETAIL SPEC REQUIREMENT	
CLASS II ENGRG CHANGE	
CLASS I ENGRG CHANGE	

CONTRACT NO. NAS9-1100
LINE ITEM 080
DOCUMENTATION TYPE II

DRAWN BY	D. FERRIER 9-8-66	WEIGHTS	K. Albanese 9/29
LAYOUT BY	S. Doucet 9-8-66		
CHECKED BY			
GP. LDR	JW/C.N. Cohen 9-13-66		
VDI	[illegible]		
STRUCT	9-15-66 [illegible] 9-16	PROJ ENGR	R.M. Carbee (W) 9-19
STRUCT	HILDERMAN 9/17	REL GROUP	[illegible] 10-7-66

Ⓥ

GRUMMAN AIRCRAFT ENGRG CORP
BETHPAGE, L. I., NEW YORK

LINES INSTALLATION
ELECTRONIC ASCENT
STAGE CABIN

SIZE	CODE IDENT NO.		
B	26512	LDW280-52357	M
SCALE	NONE	SHEET 1.	OF 30

ENG 77.1 12-65

01

NAS 9-1100

SHEET REVISION STATUS

CHG LTR	SHEET NUMBER	CHG LTR	SHEET NUMBER	CHG LTR	SHEET NUMBER	CHG LTR	SHEET NUMBER	CHG LTR	SHEET NUMBER	CHG LTR	SHEET NUMBER	CHG LTR	SHEET NUMBER
M	1.00	M	2.00	K	3.00	M	8.00	M	13.00				
M	1.01	M	2.01	K	3.01								
		M	2.02	M	3.02								
K	1.10			M	4.00	M	9.00	M	14.00				
K	1.11												
K	1.12												
K	1.13												
K	1.14												
K	1.15												
K	1.16												
K	1.17												
K	1.18												
M	1.19												
M	1.20			M	5.00	M	10.00						
M	1.21												
M	1.22												
				M	6.00	A	11.00						
					~~7.00~~	F	12.00						

GRUMMAN AIRCRAFT ENGRG CORP., BETHPAGE, L. I., NEW YORK

SIZE	CODE IDENT NO.		
B	26512	LDW280-52357	M
SCALE NONE		SHEET 1.01	

ENG 77.4 5-64

01

NAS 9-1100

REVISIONS FOR CONTINUATION OF REVISIONS SEE SHEET 1.20

CHANGE LTR	ITEM NO.	SHEET NO.	ZONE	GRUMMAN INFO ONLY PRIOR TO EVENT	DET SPEC	CLASS I	CLASS II	ENGRG ORDER	DESCRIPTION	EFFECTIVITY	DISPOSITION OF EXISTING PARTS		CHANGED BY AND DATE	ENGRG APPD	GOVT APPD
											REWORK	SCRAP			
									ADDED SH 1.01, 1.19, 1.20, 1.21, 1.22, 13.00 & 14.00; LAST SECTION LETTER USED BC WAS AZ SHEET 1 OF 31 WAS SHEET 1 OF 24.						
L	1	6.00 2.01	26A	H		✓		EO L1 LCD 2296 LEO280-766	ON-1 INSTL: NAS1003-3A(4) WAS NAS1133V3(4)	LM-2(32)	✓		J. FOGARTY DEC. 28, 1967		
	2	8.00 9.00 10.00	37B 41C 50B 56A	R				EO L2 LCD 1978	ON-9 INSTL: ADDED LDW390-52883(A) & (E); LDW390-52525(A) & (E); LDW390-21902(A). LDW390-52816(C) WAS LDW390-52816(A). ADDED: LDW390-21515(A) & LDW390-21902(A). ADDED: LDW390-52883(A) & (E); LDW390-52525(A) & (E); LDW390-21766(B) & (E); LDW390-52811(B) & (E). LDW390-52883(C) WAS LDW390-21833(C). ADDED SPLICES E8133 THRU E8136. ADDED: LDW390-21515(A); LDW390-21902(A); LDW390-28922(A). ADDED SPLICES E8137 THRU E8142.						
	3	8.00 2.00 2.01 2.02 9.00 10.00	37B 41C 46A 56C	E				EO L3 LCD 798 CCA 447	ON-9 INSTL: ADDED LDW390-52812(B),(C),(H). ADDED CONTINUATION NOTES. ADDED: LDW390-52812(B)(C),(H); E7057(N4). ADDED: GB511J-04-2 (4), AN960D4L (8), MS21042L04(4), GT11F-BR-08-10(1). ADDED: LDW390-52812 (H). ADDED: LDW390-52812 (B),(C),(H).						
	4	8.00	40B	E				EO L4 LCD 2223 CCA 745	ON-9 INSTL: ADDED E8256(REF). ADDED E8227(REF).						

CHG APPROVED

LTR	GROUP LDR

GRUMMAN AIRCRAFT ENGRG CORP., BETHPAGE, L. I., NEW YORK

SIZE	CODE IDENT NO.		
B	26512	LDW280-52357	M
SCALE NONE		SHEET 1.19	

ⓜ

ENG 77.16 3-66

01

NAS 9-1100

REVISIONS FOR CONTINUATION OF REVISIONS SEE SHEET 1.21

CHANGE LTR	ITEM NO.	SHEET NO.	ZONE	GRUMMAN INFO ONLY	DET SPEC	CLASS I	CLASS II	ENGRG ORDER	DESCRIPTION	EFFECTIVITY	DISPOSITION OF EXISTING PARTS REWORK	DISPOSITION OF EXISTING PARTS SCRAP	CHANGED BY AND DATE	ENGRG APPD	GOVT APPD
L	5	2.00 2.01 2.02 1.00 6.00 2.01 2.02 3.02	26B 23B 23C	E		✓		EO L5 LCD2318 LCD2317	CREATED -5 INSTL; REMOVED THE FOLLOWING FROM -7 INSTL & ADDED SAME TO -5 INSTL; LDW280-16042-1, LDW280-16042-3, LDW280M10983-1, LDW280P11589-11 (2), LDW280P11580-11, LDW280P16242-11, LDW280M16125-1-1 (4), GB511J-08-3 (2), GB511J-3-2 (2), AN960D8L(4), AN960D10L(8), AN960D10(4), MS21042L08(2), MS21042L3 (9), MS27039-1-09 (2), MS21919WH16, MS21919WH27, NAS43DD3-64, GT835E8, GT535V-8, NAS1133V3(4), MS20995NC32. EFFECTIVITY OF -5 IS LM-2(32), NEXT ASSY LDW280-52000; QTY REQD (1). LDW280-52357-5 WAS LDW280-52357-7. ON-7 INSTL: ADDED NAS1003-6H(6), NAS1003-7H(6), MS21042L3(12). DELETED: GB511J-3-6(12), AN960D10L (24) MS21042L3(12). ADDED "ON-5 INSTL" TO LOCKWIRE CALLOUT & ADDED NOTE 31.	LM-2(32)	-7		J.W. FOGARTY DEC. 28, 1967		
	6	13.00 2.00 2.02		R			✓	EO L6 LCD1078	ON-9 INSTL: ADDED VIEW LOOKING OUTBOARD RH SIDE (PANEL PIGTAIL CLAMPING), VIEW LOOKING OUTBOARD LH SIDE (PANEL PIGTAIL CLAMPING). ADDED: GB511J-08-2 (7), LDW280-16068-1(3), LDW280-16068-3 (4), AN960D8L(14), MS21042L08(7).		✓				
	7	14.00 2.00 3.02 4.00	3B 4A 5A 7A 6B	E		✓		EO L7 LCD2229	ON-7 INSTL: ADDED DETAILS BA & BB. ADDED: LDW280-52988-1 & -7 (1 OF EA.) ADDED: NOTE 32. ADDED "FOR CONTINUATION SEE DETAIL BA (SEE NOTE 32)" DELETED VIEWS "TEMP XDUCER ON CLUSTER I & IV - LH SIDE SHOWN RH OPP." DELETED: "VIEW LOOKING AFT LH SIDE SHOWN RH OPP." DELETED: "SECTION Y-Y." ADDED: FOR CONTINUATION SEE DETAIL BA. (SEE NOTE 32).						

CHG APPROVED

LTR	GROUP LDR

GRUMMAN AIRCRAFT ENGRG CORP., BETHPAGE, L. I., NEW YORK

SIZE	CODE IDENT NO.		
B	26512	LDW280-52357	M

SCALE NONE SHEET 1.20

ENG 77.16 3-66

01 NAS 9-1100

REVISIONS FOR CONTINUATION OF REVISIONS SEE SHEET 1.22

CHANGE LTR	ITEM NO.	SHEET NO.	ZONE	GRUMMAN INFO ONLY	DET SPEC	CLASS I	CLASS II	ENGRG ORDER	DESCRIPTION	EFFECTIVITY	DISPOSITION OF EXISTING PARTS REWORK	DISPOSITION OF EXISTING PARTS SCRAP	CHANGED BY AND DATE	ENGRG APPD	GOVT APPD
L	8	13.00 2.01		E			✓	EO L8 LCD 1078	ON-9 INSTL: ADDED PANEL PIGTAIL & CLAMPS TO VIEW LOOKING OUTBOARD LH SIDE & VIEW LOOKIN OUTBOARD RH SIDE. ADDED VIEW LKG UP CABIN OVERHEAD (PANEL PIGTAIL CLAMPING); VIEW LOOKING FWD FRONT FACE (PANEL PIGTAIL CLAMPING). ADDED: NAS 43 DD3-24 (5) NAS 43 DD3-32(2), NAS43DD3-40 (1) NAS 43DD3-16 (2), GT11J-BR-08-10(2).	LM-2(32)	✓		J.W. FOGARTY DEC. 28, 1967		
	9	9.00	50B 51B			✓		EO L9	REF EO L2: -9 INSTL WAS -3 INSTL. ADDED SPLICE E8257 (REF). REF EO L4: -9 INSTL WAS -3 INSTL. DELETED SPLICE E8227 (REF).						
	10	4.00	12C				✓	EO L10	ON-7 INSTL: DELETED LDW390-21880(B)(REF) (P89B TO P720) & LDW390-28607(H)(REF).		NOT REQD				
M	1	4.00 2.01	10A 10C 6C 3C					EO M1	ON-7 INSTL. P1516(REF) WAS P1515(REF); P1515(REF) WAS P1515(REF). DELETED: LDW390-28983(REF). ADDED: P1572 (REF); LDW390-28983 (H)(REF). DELETED: LDW390-21982(H), P1575(REF), P1574(REF) DELETED: LDW390-28983 (REF), P1572 (REF). ADDED: P1574 (REF); P1575 (REF); LDW390-21982(H)(REF) N4GND(REF); E47060(REF); E4761(REF); GT11J-BR-08-12(1)						
	2	5.00 2.01	16C					EO M2	ON-7 INSTL: ADDED VIEW BC; GT11J-BR-08-12(1).						
	3	8.00 2.00	40A	E		✓		EO M3	ON-9 INSTL: DELETED LDW390-28015-1 (MOD KIT, LMP REMOVAL).						
	4	8.00 9.00	37B 46B				✓	EO M4	ON-9 INSTL: REVISED PICTURE. RELOCATED J181 (REF) REARRANGED NAS43 DD3-32(1). ADDED GC500AC(3) CLAMPS. REVISED PICTURE. DELETED GC500AC(16) CLAMPS.						

CHG APPROVED	LTR	GROUP LDR

GRUMMAN AIRCRAFT ENGRG CORP., BETHPAGE, L. I., NEW YORK

SIZE	CODE IDENT NO.		
B	26512	LDW280-52357	M
SCALE NONE		SHEET 1.21	

ENG 77.16 3-66

01

NAS 9-1100

REVISIONS FOR CONTINUATION OF REVISIONS SEE SHEET ______

CHANGE LTR	ITEM NO.	SHEET NO.	ZONE	GRUMMAN INFO ONLY	DET SPEC	CLASS I	CLASS II	ENGRG ORDER	DESCRIPTION	EFFECTIVITY	DISPOSITION OF EXISTING PARTS		CHANGED BY AND DATE	ENGRG APPD	GOVT APPD
											REWORK	SCRAP			
M	4	9.00 2.01 10.00	50A 51A 56A 59A				✓	EO M4 (CONT.) LIM (f)	ON-9 INSTL: REVISED PICTURE. ADDED GC500AC CLAMP REVISED PICTURE. ADDED GC500AC(2) CLAMPS & NAS43DD3-32(2) REVISED PICTURE. RELOCATED 19A6(REF). ADDED GC500AC(1) CLAMP. REVISED PICTURE.	LM-2(32)	✓				

CHG APPROVED	LTR	GROUP LDR									

GRUMMAN AIRCRAFT ENGRG CORP., BETHPAGE, L. I., NEW YORK

SIZE	CODE IDENT NO.		
B	26512	LDW280-52357	M
SCALE	NONE		SHEET 1.22

(3)

ENG 77.16 3-66

01

NAS 9-1100

QTY PER ASSEMBLY																	
CL				-9	-7	-5	CODE IDENT	PART NO.	I&T	NOMENCLATURE OR DESCRIPTION	MATERIAL	GOVT SPEC	COML SPEC	STOCK SIZE	PROCESS SYM	FINISH NO.	ZONE
					1			LDW280-52988-1	E	CLUSTER INSTL	SEE DWG						
					1			LDW280-52988-7		CLUSTER INSTL							
				3				LDW280-16068-1		CLAMP							
				4				LDW280-16068-3		CLAMP							26A
						4		LDW280M16144-11		TEE							26A
						4		LDW280M16125-11		CLAMP							26A
						1		LDW280P16242-11		TAPE							24B
						1		LDW280M10983-1		CLAMP							25B
						1		LDW280-16042-3		CLAMP							25B
						1		LDW280-16042-1		CLAMP							22B
					6			LSC320-320-1		ADAPTER							11B
					1			LSC380-00602-13		ADAPTER							26B
						2		LDW280P11589-11		INSERT							26B
						1		LDW280P11580-11		GUIDE							49B
				6				LDW280-16030-49		SPECIAL CLAMP							52B
				6				LDW280-16030-45		SPECIAL CLAMP							4B
					1			LDW280P16221-31		SPACER							57B 60B
				10				LDW280-28362-9		SPECIAL CLAMP							60B
				1				LDW280P16224-14		POLYCARBON COVER							57B
				1				LDW280P16224-13		POLYCARBON COVER							22B 34B
				2	7			LDW390-52201-1		BASE, ASSY							3A
					1			LDW390-52014-1		HARNESS ASSY INSTL	SEE DWG.						40A
C								LDW280-52357-9		LINES INSTL							
C								LDW280-52357-7		LINES INSTL							
								LDW280-52357-5	E	LINES INSTL							

CL: CLEANLINESS LEVEL PER LSP-14-0011

SYM OR NO.	PROCESS OR FINISH	GRUMMAN SPEC OR MILITARY SPEC	SYM OR NO.	PROCESS OR FINISH	GRUMMAN SPEC OR MILITARY SPEC	SYM OR NO.	PROCESS OR FINISH	GRUMMAN SPEC OR MILITARY SPEC

I & T: IDENTIFICATION AND TRACEABILITY IN ACCORDANCE WITH : NONE
NONE

GRUMMAN AIRCRAFT ENGRG CORP, BETHPAGE, L. I., NEW YORK

SIZE	CODE IDENT NO.		
B	26512	LDW280-52357	M

(13)

SCALE NONE SHEET 200

ENG 77.2 7-66

01

NAS 9-1100

QTY PER ASSEMBLY							CODE IDENT	PART NO.	I&T	NOMENCLATURE OR DESCRIPTION	MATERIAL	GOVT SPEC	COML SPEC	STOCK SIZE	PROCESS SYM	FINISH NO.	ZONE
CL				-9	-7	-5											
					12	9		MS21042L3	E	NUT	STD PART						
				52	69	2		MS21042L08		NUT							
				248	4			MS21042L04		NUT							
					AS REQD			MS21266-2N		GROMMET							
						1		MS21919WH27		CLAMP							
						1		MS21919WH16		CLAMP							
						2		MS27039-1-09		BOLT							
					1	1		GT11J-BR-08-12		TERM. INSTL.							
				2				NAS43DD3-16		SPACER							
						4		NAS1003-3A		BOLT							
					1			NAS43DD4-48		SPACER							
				1	34	1		NAS43DD3-64									
				1				NAS43DD3-56									
				7				NAS43DD3-48									
				16	1			NAS43DD3-40									
				52	3			NAS43DD3-32									
				11				NAS43DD3-24		SPACER							
					6			NAS1003-6H		BOLT							
					6			NAS1003-7H		BOLT	STD PART						
					2			GT11J-BR-3-10		TERMINAL INSTL	GRUMMAN STD						
				2				GT11J-BR-08-10									
				1				GT11F-BR-3-12									
				60	16			GT11F-BR08-12		TERMINAL INSTL							
					(AS REQD)	(AS REQD)		GT835E8		TAPE, LACING							
								GT535V-8		TAPE							
					(AS REQD)			GS830G		SLEEVE							
				2				GN512CF-08C		NUT							
				1				GC500AC-14		CLAMP							
				1				GC500AC-2		CLAMP							
				1				GT11F-BR-08-10	E	TERMINAL INSTL.	GRUMMAN STD						

CL = CLEANLINESS LEVEL PER LSP-14-0011

SYM OR NO.	PROCESS OR FINISH	GRUMMAN SPEC OR MILITARY SPEC	SYM OR NO.	PROCESS OR FINISH	GRUMMAN SPEC OR MILITARY SPEC	SYM OR NO.	PROCESS OR FINISH	GRUMMAN SPEC OR MILITARY SPEC

I & T: IDENTIFICATION AND TRACEABILITY IN ACCORDANCE WITH : NONE

GRUMMAN AIRCRAFT ENGRG CORP, BETHPAGE, L. I., NEW YORK

SIZE	CODE IDENT NO.		
B	26512	LDW280-52357	M
SCALE NONE		SHEET 201	

③

ENG 77.2 7-65

01

NAS 9-1100

CL	-9	-7	-5	PART NO.	I&T	CODE IDENT	NOMENCLATURE OR DESCRIPTION	MATERIAL	GOVT SPEC	COML SPEC	STOCK SIZE	PROCESS SYM	FINISH NO.	ZONE
			2	GB511J-3-2	E		BOLT	GRUMMAN STD						
		5		GB511J-08-12										
		2		GB511J-08-11										
	2			GB511J-08-10										
		11		GB511J-08-6										
	13		2	GB511J-08-3										
	16			GB511J-08-2										
		16		GB511J-04-6										
	332	4		GB511J-04-2			BOLT	GRUMMAN STD						
	SEE NOTE	28		MS21919WDH			CLAMP	STD PART						
				AN960D*L			WASHER							
				MS21042L			NUT							
				MS21266			GROMMET							
			(AS REQD)	MS20995NC32			WIRE, LOCK	STD PART						
				GT835K			TAPE, LACING	GRUMMAN STD						
				GT835C			TAPE, INSUL							
				GS830G			SLEEVE							
				GC500S			CLAMP, CUSHIONED							
	SEE NOTE	28		GB511J	E		BOLT	GRUMMAN STD						
		1		6010678	E		B HARNESS	GFE						
		1		1010705			CLAMP	GFE						
		5		1010400			CLAMP	GFE						
			4	AN960D10			WASHER	STD PART						
		12	8	AN960D10L										
	78	108	4	AN960D8L										
	496	8		AN960D4L	E		WASHER	STD PART						

QTY PER ASSEMBLY

CL= CLEANLINESS LEVEL PER LSP-14-0011

SYM OR NO.	PROCESS SYM OR FINISH NO.	GRUMMAN SPEC OR MILITARY SPEC	SYM OR NO.	PROCESS SYM OR FINISH NO.	GRUMMAN SPEC OR MILITARY SPEC	SYM OR NO.	PROCESS SYM OR FINISH NO.	GRUMMAN SPEC OR MILITARY SPEC

I&T: IDENTIFICATION AND TRACEABILITY IN ACCORDANCE WITH NONE

GRUMMAN AIRCRAFT ENGRG CORP., BETHPAGE, L. I., NEW YORK

SIZE	CODE IDENT NO.		
B	26512	LDW280-52357	M

SCALE NONE

SHEET 2.02

Ⓜ

ENG 77.2 5-64

01

NAS 9-1100

NOTES: (CONTINUED)

25. APPLY A FILM OF GREASE (LSM-14-6004A) TO O-RINGS & SEATING SURFACES OF ALL LSC320-320-1 ADAPTERS. WIPE AWAY EXCESS GREASE.

26. LOCKWIRE PER MS33540, USING MS20995C32 LOCKWIRE.

27. "APPLY 3M SERIES 400 VELVET COATING APPROX 1/2" IN DIA AS SHOWN; P/N #401-B2 COLOR GRAY, #401-F1 COLOR YELLOW, #401-D10 COLOR RED, PER LSP 14-4503 EXCLUDING PARA 3.1.1 & 3.4.5.

28. SELECTION & INSTALLATION OF LINES CLAMPS, CLAMP MTG, HARDWARE, ANTICHAFE SLEEVING, GROMMETS, TAPE, LOCKWIRE, STR SUPPORT & CHAFE PREVENTIVE BONDING SHALL BE IN ACCORDANCE WITH LPC280-23 (EXCEPT AS NOTED).

29. ELECTRICAL BONDING & GROUNDING OF COMPONENTS INSTALLED ON THIS DWG SHALL BE IN ACCORDANCE WITH LSP14-13334, FIGURE (2,3,4 & 5, 8, 10) AS LISTED BELOW: GT11J-TERMINAL INSTL (CLASS "B", N3 & N4 GROUNDS) - FIG 2; CLASS "C": HEAVY DUTY GND-FIG 3; CLASS "D": BOLTED CONNECTIONS - ELECTRONIC EQUIP FIG 4 & 5, GROUNDING RING FIG 8, ELECTRICAL RECEPTACLES FIG 10.

30. APPLY 3M SERIES 400 VELVET COATING P/N YELLOW #401-F1, BLACK #403-C10, GRAY #401-B2, RED #403-D10, WHITE #401-A10 PER LSP 14-4503.

31. TORQUE E.C.I. COUPLING RING 70-80 FOOT POUNDS. (NOTE: SET TORQUE AT 66 FT. LB TO ACHIEVE REQD 70-80 FT-LB TORQUE USING LDW420-33112.)

32. SPLICES ARE TO BE WITHIN THE AREA INDICATED AND MAY BE LOCATED IN THE CABLE RUNS ALONG THE CABIN SKINS OR IN THE RUNS TO THE CLUSTERS.

GRUMMAN AIRCRAFT ENGRG CORP., BETHPAGE, L. I., NEW YORK

SIZE	CODE IDENT NO.		
B	26512	LDW280-52357	M (m)
SCALE		SHEET 3.02	

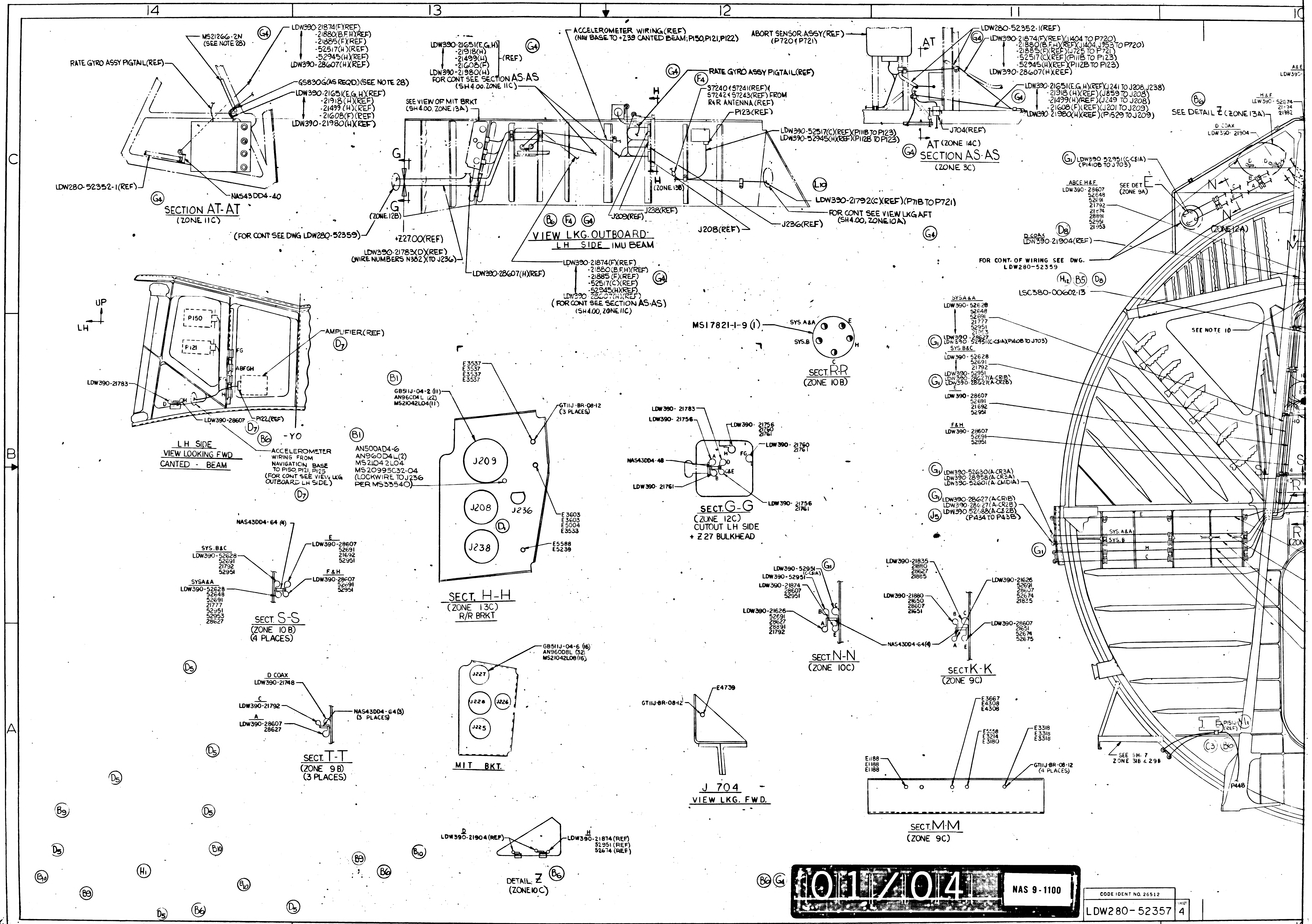

14
13
12
11
C
B
A
SECTION AT-AT
(ZONE 11C)
RATE GYRO ASSY PIGTAIL (REF)
MS21266-2N (SEE NOTE 28)
LDW390-21874(F)(REF) -21880(B,F,H)(REF) -21885(F)(REF) -52517(H)(REF) -52945(H)(REF)
LDW390-28607(H)(REF)
GS830G(AS REQD)(SEE NOTE 28)
LDW390-21651(E,G,H)(REF) -21918(H)(REF) -21499(H)(REF) -21608(F)(REF)
LDW390-21980(H)(REF)
LDW280-52352-1(REF)
NAS43DD4-40
(FOR CONT SEE DWG LDW280-52359)
G4
LDW390-21651(E,G,H) -21918(H) -21499(H) -21608(F) (REF)
LDW390-21980(H)
FOR CONT SEE SECTION AS-AS (SH 4.00, ZONE 11C)
SEE VIEW OF MIT BRKT (SH 4.00, ZONE 13A)
ACCELEROMETER WIRING (REF) (NAV BASE TO +Z39 CANTED BEAM; P150, P121, P122)
RATE GYRO ASSY PIGTAIL (REF)
57240 (57241(REF)) 57242 (57243(REF) FROM R&R ANTENNA (REF)
P123(REF)
LDW390-52517(C)(REF)(P11B TO P123)
LDW390-52945(H)(REF)(P112B TO P123)
LDW390-21792(C)(REF)(P71B TO P721)
FOR CONT SEE VIEW LKG AFT (SH 4.00, ZONE 10A)
J209(REF)
J238(REF)
J208(REF)
J236(REF)
(ZONE 13B)
(ZONE 12B)
+Z27.00(REF)
LDW390-21783(D)(REF) (WIRE NUMBERS N382 (X)TO J236)
LDW390-28607(H)(REF)
VIEW LKG. OUTBOARD
LH SIDE IMU BEAM
B6 F4 G4
LDW390-21874(F)(REF) -21880(B,F,H)(REF) -21885(F)(REF) -52517(C)(REF) -52945(H)(REF)
LDW390-28607(H)(REF)
(FOR CONT SEE SECTION AS-AS) (SH 4.00, ZONE 11C)
ABORT SENSOR ASSY (REF) (P720 (P721)
LDW280-52352-1(REF)
LDW390-21874(F)(REF)(J404 TO P720) -21880(B,F,H)(REF)(J404, J953 TO P720) -21885(F)(REF)(J725 TO P721) -52517(C)(REF)(P11B TO P123) -52945(H)(REF)(P112B TO P123)
LDW390-28607(H)(REF)
LDW390-21651(E,G,H)(REF)(J241 TO J208, J238) -21918(H)(REF)(J859 TO J208) -21499(H)(REF)(J249 TO J208) -21608(F)(REF)(J201 TO J209)
LDW390-21980(H)(REF)(P1529 TO J209)
J704(REF)
AT (ZONE 14C)
SECTION AS-AS
(ZONE 3C)
SEE DETAIL Z (ZONE 13A)
D COAX LDW390-21904
G1 LDW390-52951(C-C&IA) (P1410B TO J703)
ABCE H&F LDW390-28607 52648 52691 21792 21774 28891 52951 21953
SEE DET E (ZONE 9A)
(ZONE 12A)
D COAX LDW390-21904(REF)
D8
FOR CONT. OF WIRING SEE DWG. LDW280-52359
H12 B5 D8
LSC380-00602-13
SYS A&A LDW390-52628 52648 52691 21777 52951 21953
G1 LDW390-28627 LDW390-52951(C-C&IA)(P1410B TO J703)
SYS B&C LDW390-52628 52691 21792
G1 LDW390-52951 LDW390-28627(A-CR1B) LDW390-28627(A-CR2B)
LDW390-28607 52691 21692 52951
F&H LDW390-28607 52691 52951
SEE NOTE 10
G1 LDW390-52630(A-CR3A) LDW390-28958(A-CR3A) LDW390-52601(A-CMD1A)
G1 LDW390-28627(A-CR1B) LDW390-28627(A-CR2B)
J5 LDW390-52688(A-C&2B) (P1434 TO P43B)
SYS A&A SYS B
UP
LH
P150
P121
AMPLIFIER (REF)
D7
LDW390-21783
LDW390-28607
P122(REF)
-YO
B6
LH SIDE
VIEW LOOKING FWD
CANTED - BEAM
ACCELEROMETER WIRING FROM NAVIGATION BASE TO P150, P121, P125 (FOR CONT SEE VIEW LKG OUTBOARD LH SIDE)
MS17821-1-9 (1)
SYS. A&A
SYS. B
SECT. R-R
(ZONE 10B)
B1
GB511J-04-2 (11) AN960D4L (22) MS21042L04(11)
E3537 E3537 E3537 E3537
GT11J-BR-08-12 (3 PLACES)
AN500AD4-6 AN960D4L(2) MS21042L04 MS20995C32-04 (LOCKWIRE TO J236 PER MS33540)
J209
J208
J236
J238
E3603 E3603 E5004 E3533
E5588 E5239
SECT. H-H
(ZONE 13C)
R/R BRKT
LDW390-21783
LDW390-21756
LDW390-21756 21760 21761
LDW390-21760 21761
NAS43DD4-48
LDW390-21761
LDW390-21756 21761
SECT. G-G
(ZONE 12C)
CUTOUT LH SIDE
+Z27 BULKHEAD
NAS43DD4-64 (4)
SYS. B&C LDW390-52628 52691 21792 52951
SYS A&A LDW390-52628 52648 52691 21777 52951 52953 28627
E LDW390-28607 52691 21692 52951
F&H LDW390-28607 52691 52951
SECT. S-S
(ZONE 10B)
(4 PLACES)
LDW390-52951 (C-C&IA) LDW390-52951 LDW390-21874 28607 52951
LDW390-21626 52691 28627 28891 21792
SECT. N-N
(ZONE 10C)
LDW390-21835 21880 28627 21885
LDW390-21880 21650 28607 21651
LDW390-21626 52691 28607 52674 21835
LDW390-28607 21651 52674 52675
NAS43DD4-64(4)
SECT K-K
(ZONE 9C)
D5
D COAX LDW390-21748
C LDW390-21792
A LDW390-28607 28627
NAS43DD4-64(3) (3 PLACES)
SECT. T-T
(ZONE 9B)
(3 PLACES)
GB511J-04-6 (16) AN960D8L (32) MS21042L08(16)
J227
J228
J226
J225
MIT BKT.
GT11J-BR-08-12
E4739
J 704
VIEW LKG. FWD.
E1188 E1188 E1188
E3667 E4308 E4308
E5558 E3214 E3180
E3318 E3318 E3318
GT11J-BR-08-12 (4 PLACES)
SECT. M-M
(ZONE 9C)
P151 (REF)
SEE SH. 7 ZONE 31B & 29B
P448
C3 B6
D LDW390-21904(REF)
H LDW390-21874(REF) 52951(REF) 52674(REF)
DETAIL Z
(ZONE 10C)
B9 D5 B10 H1 B6

01/04

NAS 9-1100

CODE IDENT NO. 26512

LDW280-52357 | SHEET 4

10
9
8
7
6
SEE DETAIL Z (ZONE 13A)
SEE DET E (ZONE 9A)
(ZONE 12A)
LDW390-52687(A-C$2A)(P304 TO P1433)
FOR CONT. OF WIRING SEE DWG. LDW280-52359
LDW390-52855
LDW390-21556
SEE DET D (ZONE 8A)
(ZONE 11A)
FOR CONTINUATION OF WIRING SEE DWG LDW280-52359
(ZONE 8B)
(S BAND)
DOCKING LIGHTS
(ZONE 13A)
SEE NOTE 10
SEE DET AD (ZONE 9A)
S (ZONE 13A)
(ZONE 12B)
(ZONE 7A)
SYS A&A
SYS B LDW390-52628(REF)
LDW390-21792(REF)
LDW390-52630(A-CR3A)
LDW390-28958(A-CR3A)
LDW390-52601(A-CMD1A)
DET. C (ZONE 10C)
UP
GT11F-BR-08-12 (4 PLACES)
SECT. L-L (ZONE 10C)
COLOR RED (SEE NOTE 27)
COLOR GRAY (SEE NOTE 27)
COLOR YELLOW (SEE NOTE 27)
LDW280-16020-19(REF)
SECT. A-A (ZONE 6C)
NAS43DD4-64(2)
DET. A (ZONE 6C)
NAS43DD4-32
MS21266-2N BOND IN ACCORDANCE WITH SPEC LSP14-22500 USING EC2216 ADHESIVE
DET. D (ZONE 9C)
DET. E (ZONE 10C)
MS17821-1-9(1)
SECT P-P (ZONE 9B)
SECT. Y-Y (ZONE 5A)
STRUT
DETAIL AD (ZONE 10B)
FOR CONT SEE LH SIDE VIEW LOOKING INBN (ZONE 6A)
VIEW LKG. AFT.
LDW280-52357-7 (INSTL)
X 307.000 (REF.)
X 279.984 (REF.)
X 252.000 (REF.)
X 228.000 (REF.)
WINDOW
SPLICE AREA STAGGER SPLICES
INTERSTAGE WIRING
SEE DETAIL AL (SH 6, ZONE 23C)
SEE SH6 CABLE CHART
BOND PER LPC280-23 (USE RTV-731 ONLY)
RH SIDE
VIEW LOOKING INBOARD
(ZONE 8A)

J172

E & C	A & H
LDW390-52517 52858 52905 52936 52945	LDW390-52517 21626 52628 52629 52858 52936 52945

J173

E	AB & C	H
LDW390-52787 52858 52855	LDW390-52649 52858 52936 52855	LDW390-52855 52858 21906 28932 52936 21981

J174

E & C_2	AB & C	H
LDW390-52648 21692 21828 21874 21918 52625	LDW390-52648 52649 52601 21778 21779 52917	LDW390-52648 21882 28891 52917 51934

102/04

NAS 9-1100

LDW280-52357 | 4

03/04

NAS 9-1100

6
5
4
3
2
E4953
E4952
E4952
E4958
E4957
E4960
E4960
E4451
E4451
E4451
E4951
MS21266-2N BOND IN ACCORDANCE WITH SPEC LSP14-22500 USING EC2216 ADHESIVE
A
B
J230
J246
J247
SYS.A
SEE DET. A (ZONE 8A)
A (ZONE 8A)
B (ZONE 5C)
M1
E3101
WINDOW #3
HR #3
LDW390-28607
E3100
SEE NOTE 9
SPLICE AREA STAGGER SPLICES
PIGTAIL WIRING FROM CLUSTER IV (REF)
FOR CONTINUATION OF WIRING SEE DETAIL BB (SEE NOTE 32)
LDW390-28627 52628 21918 52979
BOND PER LSP14-22500 CURE RANGE I
SYS.A&A
SYS.B
A&E
LDW390-52630(A-CR3A) (P1313 TO E3280, E3311) LDW390-28956(A-CR3A) (J703 TO E3232, E3235, E3358, E3359, E3311) LDW390-52601(A-CMD1A)
FOR CONT SEE VIEW LKG AFT (SEE 4.00, ZONE 10A)
LDW390-52601 (A-CMD1A) TO J174
DRILL NO 19 (.165-.171)
SPLICE AREA FOR CLUSTER IV STAGGER SPLICES
N3 GRD GT11JBR-3-10 E4337 E4338 REF
N3 GRD GT11JBR-3-10 E4335 E4330 REF
X228.992(REF)
J172
J174
SEE DETAIL AL (SH 6, ZONE 23C)
SEE SH6 CABLE CHART
LDW390-28627(A-CR1B) LDW390-28627(A-CR2B)
P1516
P44P
LDW390-51722
LDW390-52858
RPC280-23 (RTV-731 ONLY)
RH SIDE
VIEW LOOKING INBOARD
SECT. B-B (ZONE 5C)
LDW390-52951
LDW390-21874 28607 52951
NAS43DD4-64(2) (3 PLACES)
LDW390-21888 52517 52674 21874 52951 21989 21982
LDW390-52951(C-CB1A)
LDW390-21984
LDW390-21904
NAS43DD4-64
LDW390-21626 52691 28627 28891 21792
SECT. D-D (ZONE 3C)
NAS43DD4-64(2)
NAS43DD4-64
LDW390-21748
LDW390-21650 28607
SECT. C-C (ZONE 4C)
NAS43DD4-64 (TYP 2 PLACES)
LDW390-21874 28607 21982 52674 52691 21918 21880 52858
LDW390-28607 52674 52675
LDW390-21748
LDW390-21885 28627 21835
LDW390-21626 52691 28607 52674 21835
LDW390-21650
SECT F-F (ZONE 3C)
LDW390-21748
LDW390-21651
NAS43DD4-64(2)
MS21266-2N BOND IN ACCORDANCE WITH SPEC LSP14-22500 USING EC2216 ADHESIVE
LDW390-21651(H)(REF) (WIRE NUMBERS N441, N442, N443 (N444)(J238 TO P89B) LDW390-28607(A)(XREF) (WIRE NUMBERS N537, N538, N539)(J236 TO E2962, E2963, E4935)
FOR LDW'S SEE SECT. F-F
SECT. E-E (ZONE 3C)
NAS43DD4-64
LDW280P16221-31
E3103 (REF)
E3102(REF)
SECT AB-AB (ZONE 3C)
DET. B (ZONE 3C)
NAS43DD4-64
NAS43DD4-32
LDW390-21835 21880 28627 21885
LDW390-21626 52691 28607 52674 21835
LDW390-28607 21651 52674 52675
LDW390-21880 21650 28607 21651
VIEW LOOKING AFT LH SIDE SHOWN RH OPP
LDW280-16064-1(REF)
Y64.600(REF)
Z64.600(REF)
(ZONE 7A)
TEMP XDUCER
GR4327T RH BMT-18(REF)
GR4327T LH BMT-36(REF)
PIGTAIL SPLICE WITH CLUSTER WIRING
FUEL B
OX B
GR4431 QUAD IV BMT-43 RH (REF)
GR4438 QUAD IV BMT-41 LH (REF)
TEMP XDUCERS ON CLUSTERS I & IV LH SIDE SHOWN RH OPP
LDW390-21651(H)(REF)
LDW390-21651(A,B,C)(REF) (WIRE NUMBERS N362, N363, N361, N700, N701, N702, N453, N454, N805, N806, N366, N367, N679, N734, N733, N360, N678, N703, N704, N369, N370, N363, N764, N441, N442 (J241 TO J238, J208) (FOR CONT SEE VIEW LKG OUTBD LH IMU BEAM)
NAS43DD4-64 (TYP 2 PLACES)
P1575(REF)(STOWED)
P1574(REF)(STOWED)
N4 GND(REF) GT11-5308-2(1) E4760 E4761(REF)
SECTION AP-AP (ZONE 4C)
MS21266-2N BOND IN ACCORDANCE WITH SPEC LSP14-22500 USING EC2216 ADHESIVE
AS (ZONE 11C)
NAS43DD4-64
LDW280P16221-31(REF)
C
AP (ZONE 3C)
D (ZONE 5B)
E (ZONE 4C)
F (ZONE 5B)
X307.000 REF.
LDW390-21651(E,G,H)(REF)(WIRE NUMBERS N437, N438, N439, N440, N445, N446, N447, N448, N354, N680, N681, N682, N421, N422, N423, N424, N425, N426, N427, N428, N429, N430, N431, N432, N433, N434, N435, N436, N809, N810, N371, N372, N373, N374, N375, N376, N377, N378, N388, N389, N390, N391)(J241 TO J208, J238) LDW390-21499(H)(XREF)(WIRE NUMBERS N25, N26, N27, N28, N34, N33, N35, N36)(J249 TO J208) LDW390-21918(H)(XREF)(WIRE NUMBERS D1475, D1474, D1473)(J859 TO J208) LDW390-21608(F)(REF)(WIRE NUMBERS N392, N387, N386, N385, N381, N380, N379)(J201 TO J209) LDW390-21980(H)(XREF)(WIRE NUMBERS D1472)(P1529 TO J209)
FOR CONT. OF WIRING SEE DWG. LDW280-52359
SEE DETAIL V (ZONE 13A)
SYS.B
SYS.A
SECT V-V (ZONE 2B)
LDW390-21650
AP
AR (ZONE 2A)
AB
(ZONE 4B)
WINDOW #2
HR #2
E3102(REF)
E3103(REF)
LDW390-28607(REF)
LDW390-21874(H), LDW390-28607(H) LDW390-52674(H), LDW390-52691(H) LDW390-21880(H), LDW390-52858(H) (REF)
Y45.560 (REF)
Y49.750(REF)
LDW280-16064-1(REF)
ZONE 2C
X279.984(REF)
LDW390-28607(F), LDW390-21608(F) LDW390-52675(F), LDW390-21880(F) LDW390-21874(F), LDW390-21885(F) LDW390-21748(D) (REF)
LDW390-21874(F)(REF)(J1404 TO P720) LDW390-21880(B,F)(H)(REF)(J1404, J953 TO P720) LDW390-21635(F)(REF)(J72C TO P121) LDW390-52517(C)(REF)(P118 TO P123) LDW390-52945(H)(REF)(P112B TO P123)
VIEW LOOKING AFT LH SIDE SHOWN RH OPP
E3099
WINDOW #1
HR #1
E3098
PIGTAILS
SEE NOTE 9
8L34
8L13
8L28
8L27
PIGTAIL WIRING FROM CLUSTER I (REF ZONE 4A)
SYS B
SYS A
LDW390-28627 -21918
X252.000(REF)
FOR CONTINUATION OF WIRING SEE DETAIL BA. (SEE NOTE 32)
LDW390-52517 52855 52858 51934
LDW390-52687(A,CR2A)(P1433 TO P304B) LDW390-52630(A-CR3A) (P1313 TO E3280, E3311) LDW390-28957(A-CR3A) (J703 TO E3232, E3235, E3358, E3359, E3311) LDW390-52629(A-CR3A) LDW390-52601(A-CMD1A) (TO J174)
LDW390-21918
52979
LDW390-28958(A-CR2B) (J703 TO E3233, E3241, E3270) LDW390-52629(A-CR2B) (P44B TO E3237, E3238)
MS21266-2N BOND IN ACCORDANCE WITH SPEC LSP14-22500 USING EC2216 ADHESIVE
SPLICE AREA FOR CLUSTER I STAGGER SPLICES
SPLICE AREA ISOL VA. XDUCER STAGGER SPLICES
FOR CONT. OF WIRING SEE DWG. LDW280-52359
MS21266-2N BOND IN ACCORDANCE WITH SPEC LSP14-22500 USING EC2216 ADHESIVE
FOR CONT SEE VIEW LKG AFT, SH 4.00, ZONE 10A
X228.000(REF)
LDW390-21650(A,B,H)(REF)(TO J704)
LDW390-21651(A,B,C)(REF)(WIRE NUMBERS N362, N363, N361, N700, N701, N702, N453, N454, N805, N806, N366, N367, N369, N679, N734, N733, N360, N678, N703, N704, N370, N763, N764, N441, N442)(J241 TO J208, J238)
NAS43DD4-64 (TYPICAL 2 PLACES)
SECTION AR-AR (ZONE 3C)
LH E2563 E2563 E2567 E2661
RH E2559 E2553 E2959
P1515
P447
P1565A(REF)
E5258 (REF)
LDW390-51721
LDW390-52858
LDW390-52855 52936 52858 52945
LDW390-52905
STRUCTURAL BOND PER LPC280-23 (TYP 3 PLACES)
BOND PER LPC280-23 (USE RTV-731 ONLY)
LH SIDE
VIEW LOOKING INBOARD
LDW390-52014
PIGTAILS FROM RCS SPLICE AREA LOCAT LINES DWG. LDW280- CLUSTERS I & IV
RCS WIRING FROM CLUSTERS
Z64.600
PIGTAILS
LDW390-21748(REF)
LDW390-21650 21651 21874 21880 21918 28607 52691 52674 52858 (REF)
LDW390-21651
DETAIL AC (ZONE 3C)
LH SIDE RH SIDE
LDW280-52357 4
280-52357 4

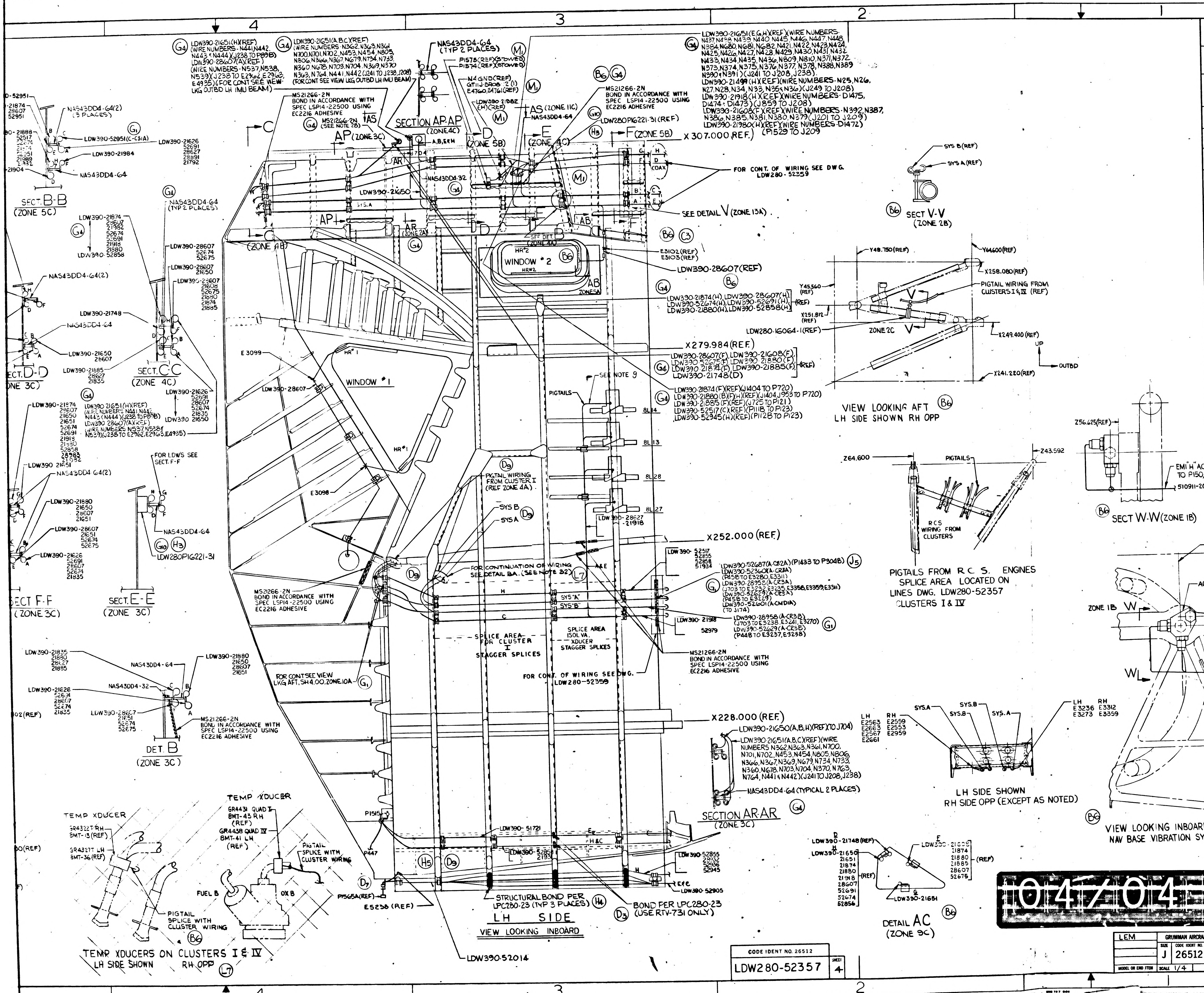
SECT. B-B
(ZONE 5C)
SECT. D-D
(ZONE 3C)
SECT. C-C
(ZONE 4C)
SECT F-F
(ZONE 3C)
SECT. E-E
(ZONE 3C)
DET. B
(ZONE 3C)
SECTION AP-AP
(ZONE 4C)
WINDOW #2
WINDOW #1
LDW390-21651(H)(REF)
LDW390-28607(H)(REF)
NAS43DD4-64
NAS43DD4-64(2)
NAS43DD4-32
LDW280P16221-31
MS21266-2N
BOND IN ACCORDANCE WITH SPEC LSP14-22500 USING EC2216 ADHESIVE
FOR LDWS SEE SECT. F-F
FOR CONT. OF WIRING SEE DWG. LDW280-52359
SEE DETAIL V (ZONE 13A)
X307.000 (REF.)
X279.984 (REF.)
X252.000 (REF.)
X228.000 (REF.)
PIGTAILS
SEE NOTE 9
PIGTAIL WIRING FROM CLUSTER I (REF ZONE 4A)
SYS B
SYS A
FOR CONTINUATION OF WIRING SEE DETAIL BA. (SEE NOTE 32)
SPLICE AREA FOR CLUSTER I STAGGER SPLICES
SPLICE AREA ISOL VA. XDUCER STAGGER SPLICES
FOR CONT SEE VIEW LKG AFT, SH 4.00, ZONE 10A
STRUCTURAL BOND PER LPC280-23 (TYP 3 PLACES)
BOND PER LPC280-23 (USE RTV-731 ONLY)
LH SIDE
VIEW LOOKING INBOARD
LDW390-52014
E5238 (REF)
SECTION AR-AR
(ZONE 3C)
NAS43DD4-64 (TYPICAL 2 PLACES)
TEMP XDUCER
FUEL B
OX B
PIGTAIL SPLICE WITH CLUSTER WIRING
TEMP XDUCERS ON CLUSTERS I & IV
LH SIDE SHOWN RH OPP
SECT V-V
(ZONE 2B)
SYS B (REF)
SYS A (REF)
VIEW LOOKING AFT
LH SIDE SHOWN RH OPP
PIGTAIL WIRING FROM CLUSTERS I & IV (REF)
LDW280-16064-1 (REF)
ZONE 2C
UP
OUTBD
PIGTAILS
RCS WIRING FROM CLUSTERS
PIGTAILS FROM R.C.S. ENGINES SPLICE AREA LOCATED ON LINES DWG. LDW280-52357 CLUSTERS I & IV
EMI "H" ACCELEROMETER WIRING TO P150, P121, P122 (REF)
510911-20L
SECT W-W (ZONE 1B)
ACCELEROMETER
ZONE 1B
MS21266-2N BOND IN ACCORDANCE WITH SPEC LSP14-22500 USING EC2216 ADHESIVE
LH SIDE SHOWN
RH SIDE OPP (EXCEPT AS NOTED)
DETAIL AC
(ZONE 9C)
VIEW LOOKING INBOARD AT A/S TOP DECK
NAV BASE VIBRATION SYSTEM WIRING
CODE IDENT NO. 26512
LDW280-52357
SHEET 4
04/04
NAS 9-1100

MANUFACTURING OPERATIONS

UNLESS OTHERWISE SPECIFIED NOTES CHECKED ✓ APPLY TO THIS DWG.

PART NUMBER AND ALL OTHER MARKINGS IN REGION MARKED ☒ USE BOTH SIDES IF NECESSARY.	
FILLET AND INSIDE CORNER RADII TOLERANCES .016R TO .062R ± .010 .063R TO .250R ± .015 OVER .250R ± .030	
DEPTH SHOWN FOR TAPPED HOLES IS FULL THDS. 2-3 IMP THDS. BEYOND PERMISSIBLE.	
EXTERNAL THREAD LENGTH SHOWN INCLUDES 2 IMPERFECT THREADS MAX.	
DO NOT CADMIUM PLATE & PAINT HOLES OR SURFACES MARKED WITH DOUBLE ASTERISK.	
MISMATCH STEP OF ± .005 PERMISSIBLE DUE TO CHANGE OF CUTTERS AT INSIDE INTERSECTING SURFACES.	
DIAMETERS MARKED MUST BE CONCENTRIC WITHIN FULL INDICATOR READING	
HOLES MUST BE KEPT FREE OF CHROME PLATING SOLUTION.	
ALL DIMENSIONS SHOWN TO BE MET AFTER CADMIUM PLATING. THICKNESS OF PLATE .0003 MIN. TO .0005 MAX. MIN. THICKNESS TO BE .0002 ON THREADED AREAS. NO ALLOWANCE FOR PLATING IN HOLES	
125 √ SURFACE ROUGHNESS INCLUDING REAMED HOLES PER MIL-STD-10	
200 √ FOR ALL DRILLED HOLES	
REMOVE ALL BURRS. BREAK ALL EDGES .015-.031	
INSPECTION INFORMATION MINIMUM PERMISSIBLE AVERAGE EDGE DISTANCE MARKED IS	
SYMBOL √ DENOTES SURFACE TO BE MACHINED	
UNLESS OTHERWISE SPECIFIED TOLERANCE ON FLANGES IS ± 1/32	
LENGTHS OF AN, NAS & MS AL ALY RIVETS SHORTER THAN 1 INCH ARE NOT SPECIFIED.	
TOLERANCE ON LOFTED DELINEATIONS IS	

DWG SIZE 34 X 140

PRINTING INFO ONLY

FULL SIZE SHEET AREA (36 X 150) = 37.5 SQ. FT.

1/2 SIZE SHEET AREA (1/4 OF FULL) = 2.3 SQ. FT.

PRINT TRIM LINE

LEM	GRUMMAN AIRCRAFT ENGRG CORP., BETHPAGE, L. I., NEW YORK				
	SIZE J	CODE IDENT NO. 26512	LDW280-52357		M
MODEL OR END ITEM	SCALE 1/4			SHEET 4.00	

Layout — K2

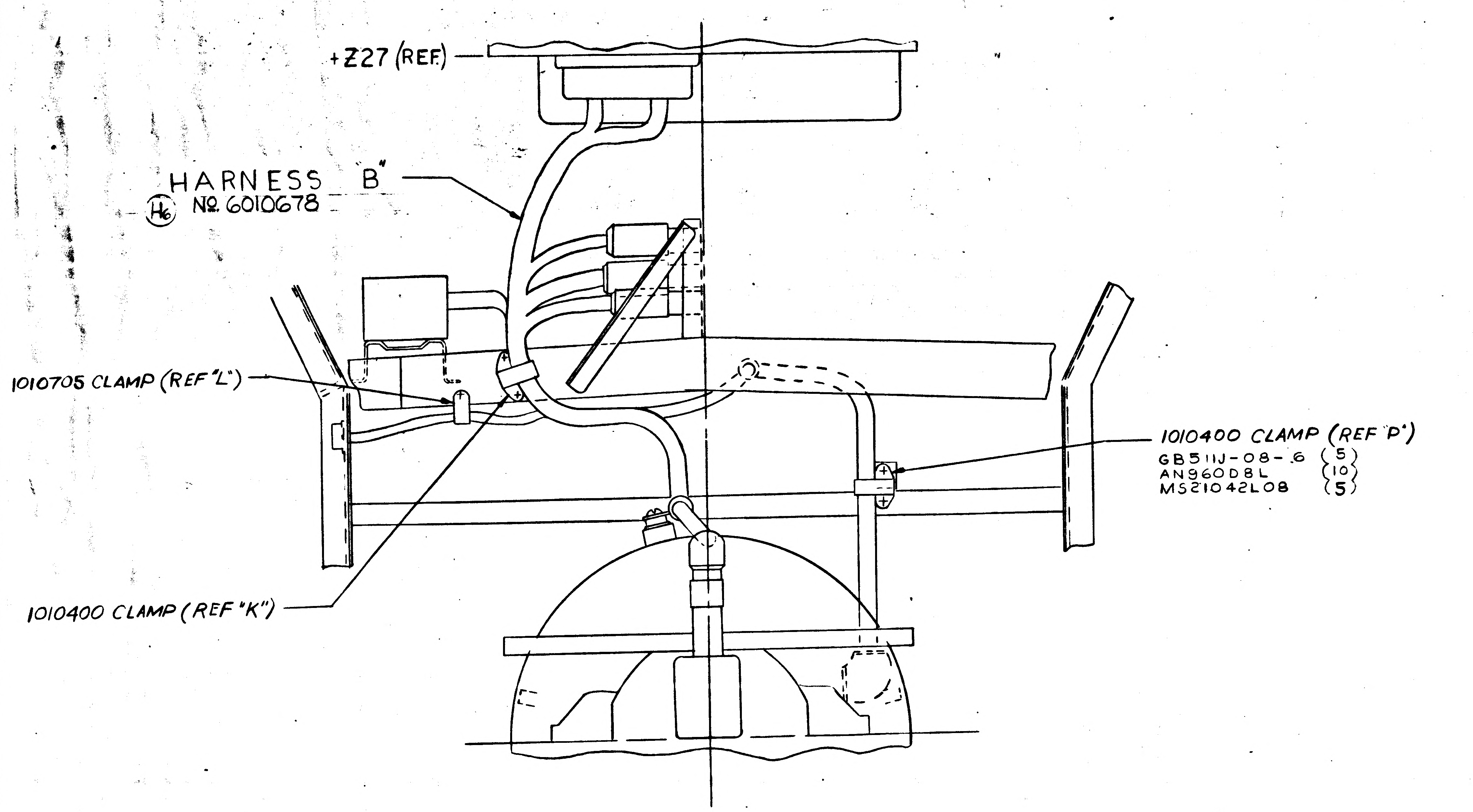
+Z27 (REF.)
HARNESS "B"
H6 № 6010678
1010705 CLAMP (REF "L")
1010400 CLAMP (REF "P")
GB511J-08-6 (5)
AN960D8L (10)
MS21042L08 (5)
1010400 CLAMP (REF "K")

±Y 0
VIEW LOOKING DOWN

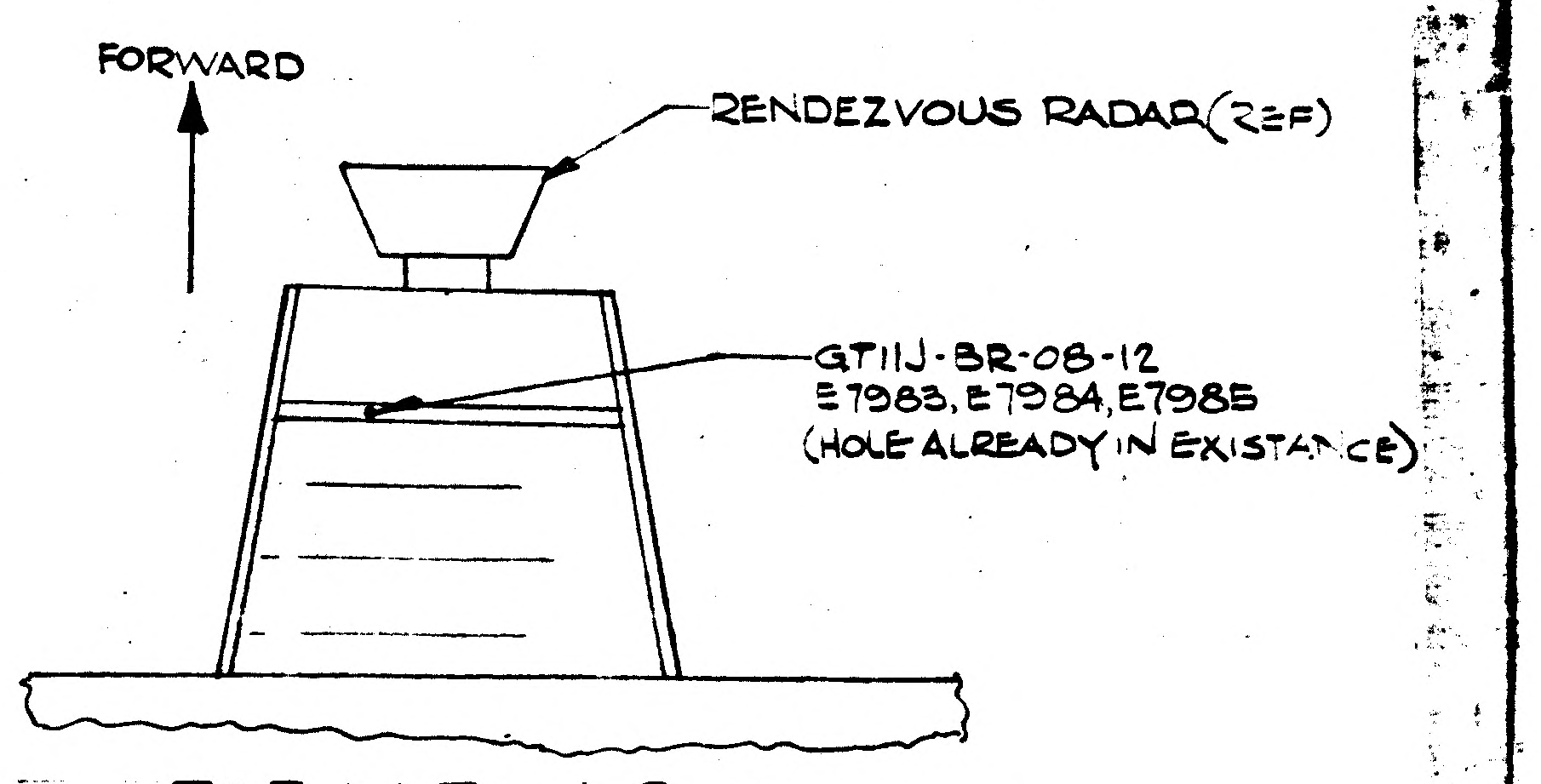
FORWARD
RENDEZVOUS RADAR (REF)
GT11J-BR-08-12
E7983, E7984, E7985
(HOLE ALREADY IN EXISTANCE)

TOP VIEW 3C
IMU AREA
PARTIAL
M2

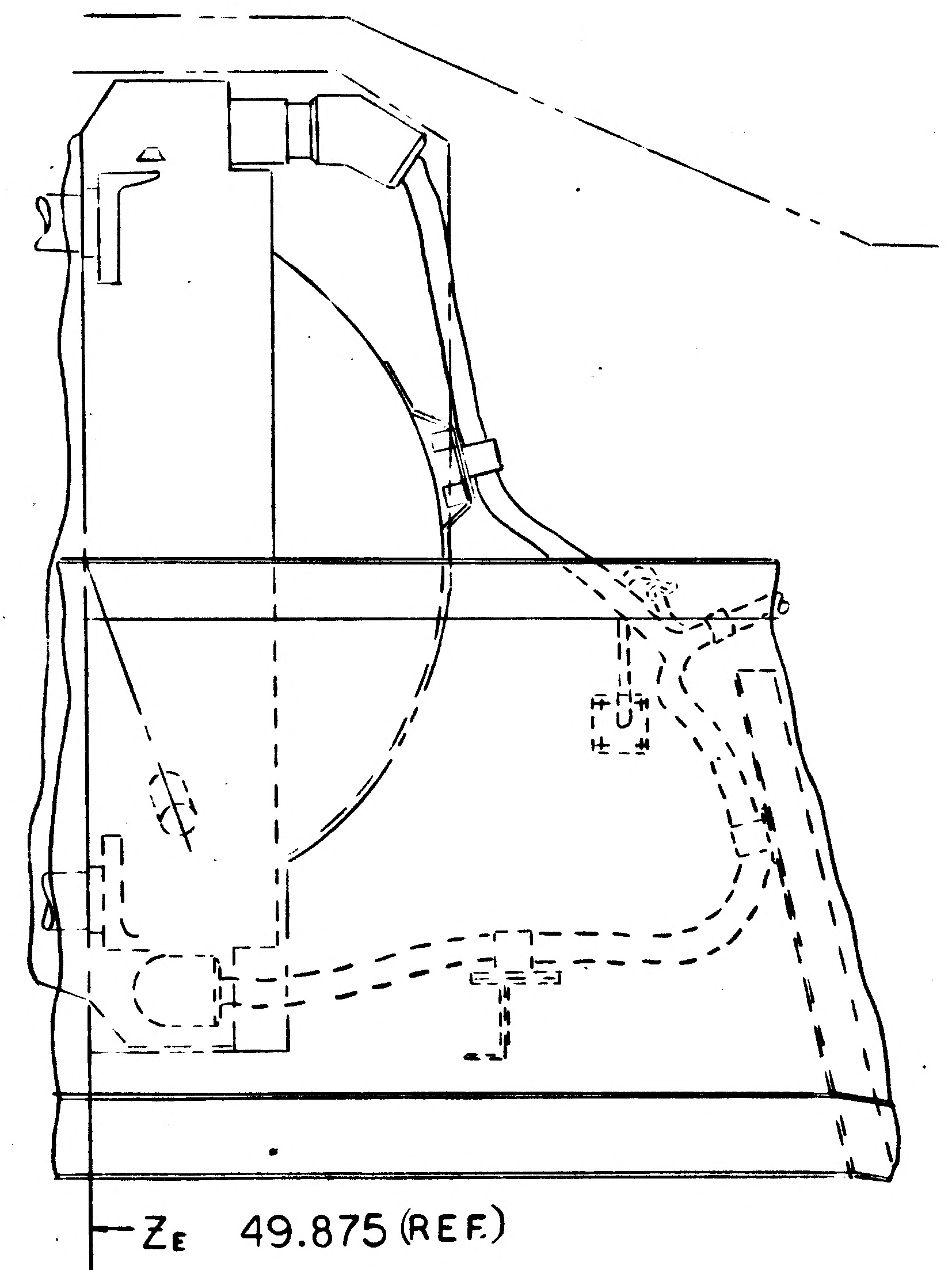
Z_E 49.875 (REF.)

VIEW LOOKING ALONG Y_E AXIS

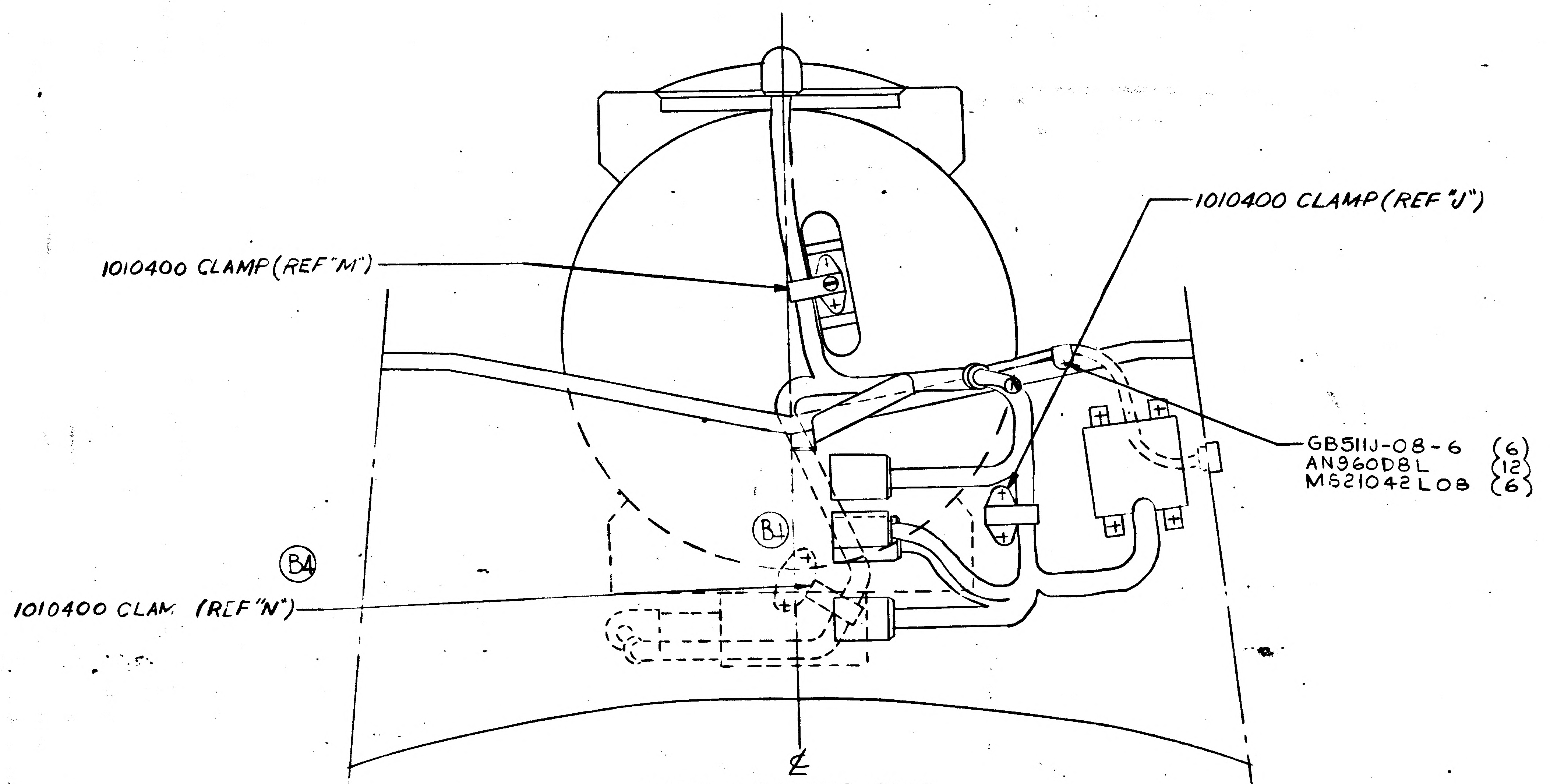
1010400 CLAMP (REF "J")
1010400 CLAMP (REF "M")
GB511J-08-6 (6)
AN960D8L (12)
MS21042L08 (6)
B1
B4
1010400 CLAM (REF "N")
℄

VIEW LOOKING FWD.

M.I.T. HARNESS "B" INSTL.

FOR HARDWARE & INSTL. PROCEDURE
SEE NOTE 8

01/02 NAS 9-1100

LDW280-52357 5

LEM

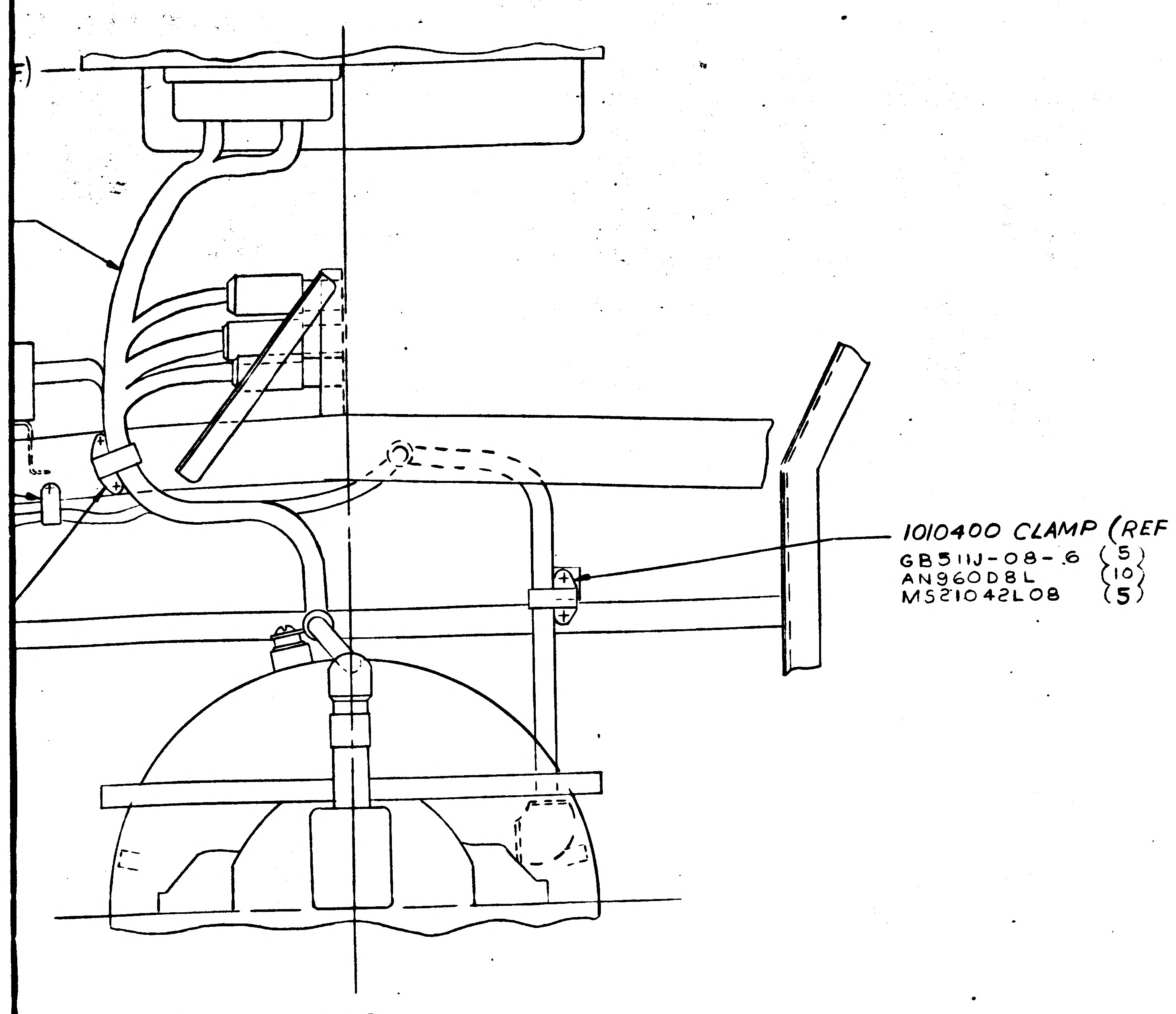
1010400 CLAMP (REF 'P')
GB511J-08-6 (5)
AN960D8L (10)
MS21042L08 (5)
±Y0

VIEW LOOKING DOWN

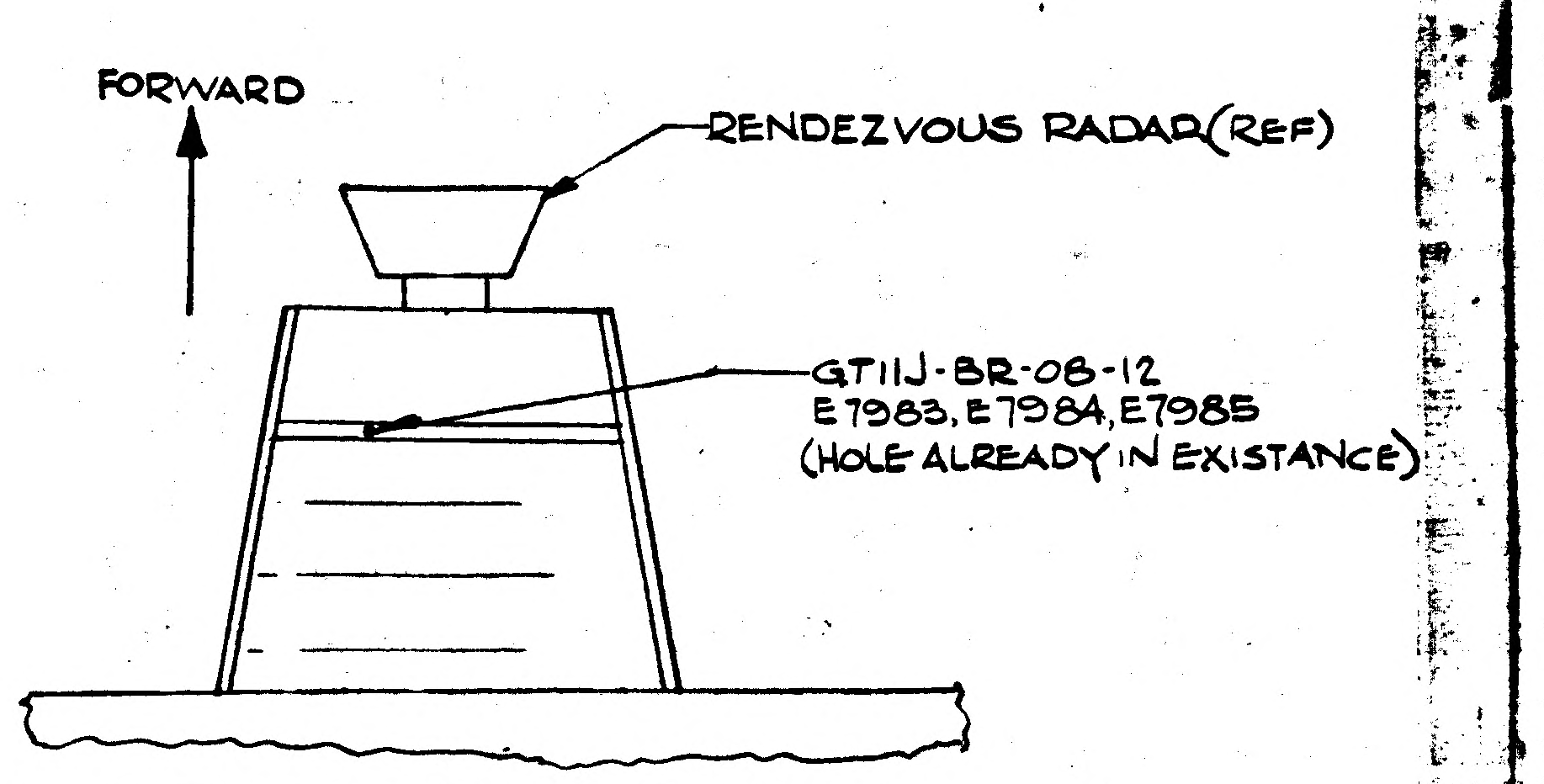
FORWARD
RENDEZVOUS RADAR (REF)
GT11J-8R-08-12
E7983, E7984, E7985
(HOLE ALREADY IN EXISTANCE)

TOP VIEW BC
IMU AREA
PARTIAL
(M6)

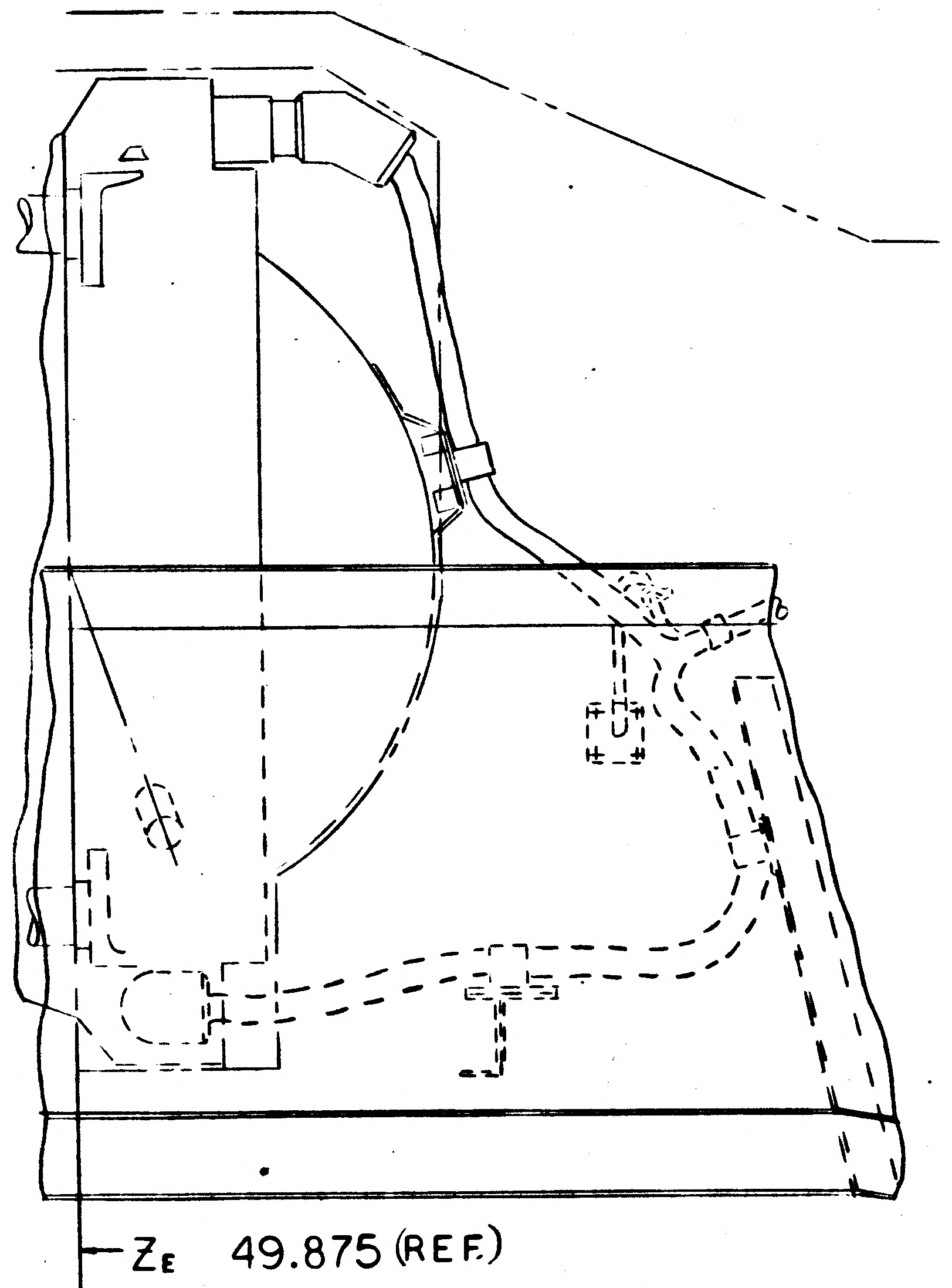
ZE 49.875 (REF.)

VIEW LOOKING ALONG YE AXIS

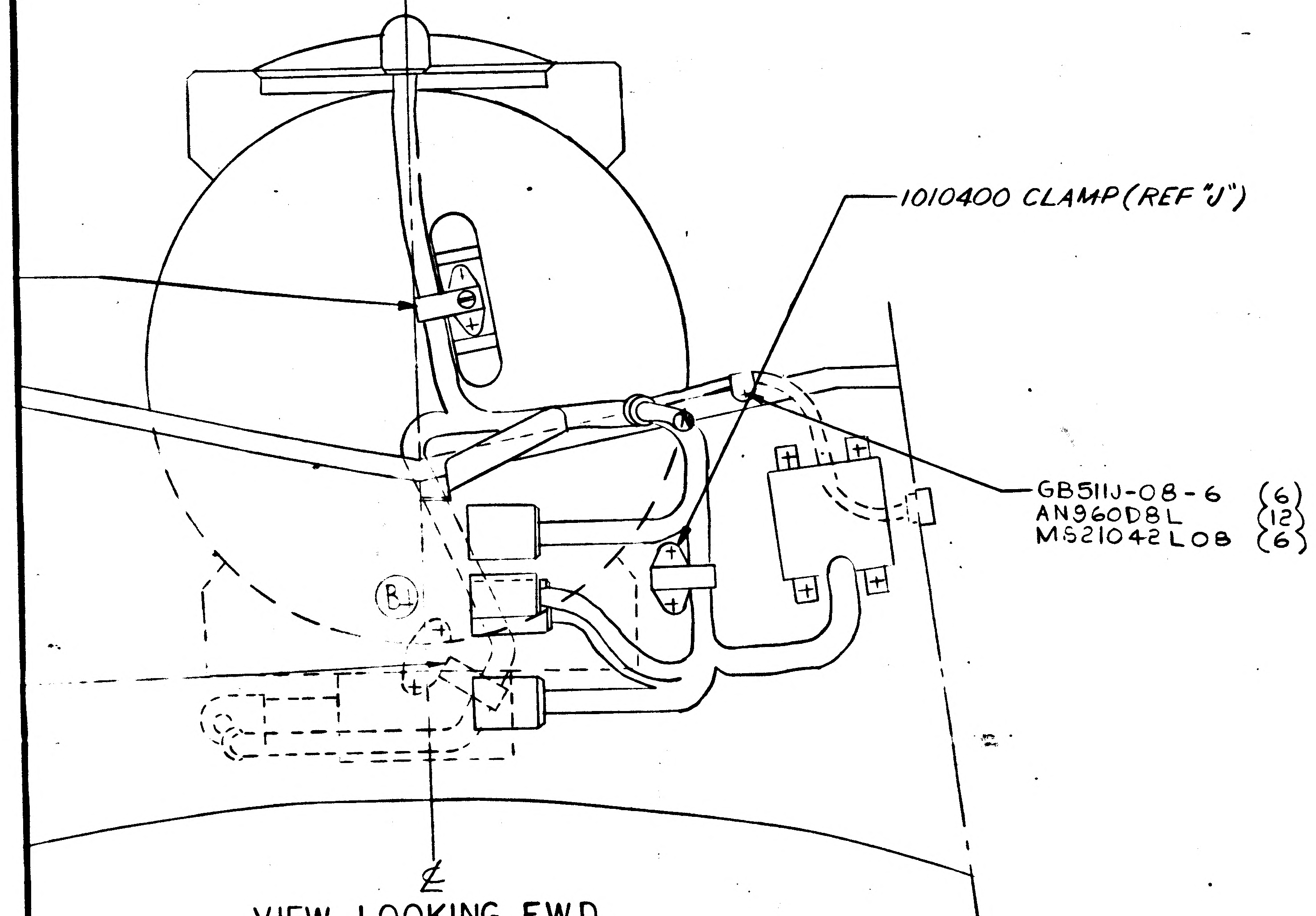
1010400 CLAMP (REF "J")
GB511J-08-6 (6)
AN960D8L (12)
MS21042L08 (6)
R

VIEW LOOKING FWD.

M.I.T. HARNESS "B" INSTL.

FOR HARDWARE & INSTL. PROCEDURE
SEE NOTE 8

MANUFACTURING OPERATIONS
UNLESS OTHERWISE SPECIFIED
NOTES CHECKED √ APPLY TO THIS DWG.

PART NUMBER AND ALL OTHER MARKINGS IN REGION MARKED ▭ USE BOTH SIDES IF NECESSARY.

FILLET AND INSIDE CORNER RADII TOLERANCES
.016R TO .062R ± .010
.063R TO .250R ± .015
OVER .250R ± .030

DEPTH SHOWN FOR TAPPED HOLES IS FULL THDS. 2 IMP THDS. BEYOND PERMISSIBLE.

EXTERNAL THREAD LENGTH SHOWN INCLUDES 2 IMPERFECT THREADS MAX.

DO NOT CADMIUM PLATE & PAINT HOLES OR SURFACES MARKED WITH DOUBLE ASTERISK

MISMATCH STEP OF ± .005 PERMISSIBLE DUE TO CHANGE OF CUTTERS AT INSIDE INTERSECTING SURFACES.

DIAMETERS MARKED MUST BE CONCENTRIC WITHIN FULL INDICATOR READING

HOLES MUST BE KEPT FREE OF CHROME PLATING SOLUTION.

ALL DIMENSIONS SHOWN TO BE MET AFTER CADMIUM PLATING. THICKNESS OF PLATE .0003 MIN. TO .0005 MAX. MIN. THICKNESS TO BE .0002 ON THREADED AREAS. NO ALLOWANCE FOR PLATING IN HOLES

125√ SURFACE ROUGHNESS INCLUDING REAMED HOLES PER MIL-STD-10

200√ FOR ALL DRILLED HOLES

REMOVE ALL BURRS. BREAK ALL EDGES .015-.031

INSPECTION INFORMATION MINIMUM PERMISSIBLE AVERAGE EDGE DISTANCE MARKED IS

SYMBOL √ DENOTES SURFACE TO BE MACHINED

UNLESS OTHERWISE SPECIFIED TOLERANCE ON FLANGES IS ± 1/32

LENGTHS OF AN, NAS & MS AL ALY RIVETS SHORTER THAN 1 INCH ARE NOT SPECIFIED.

TOLERANCE ON LOFTED DELINEATIONS IS

02/02 NAS 9-1100

LDW280-52357 5

LEM	GRUMMAN AIRCRAFT ENGRG CORP., BETHPAGE L. I., NEW YORK		
	SIZE J	CODE IDENT NO. 26512	LDW280-52357
MODEL OR END ITEM	SCALE 1/2		SHEET 5.0

5.00

THIS IS AN ORIGINAL DWG

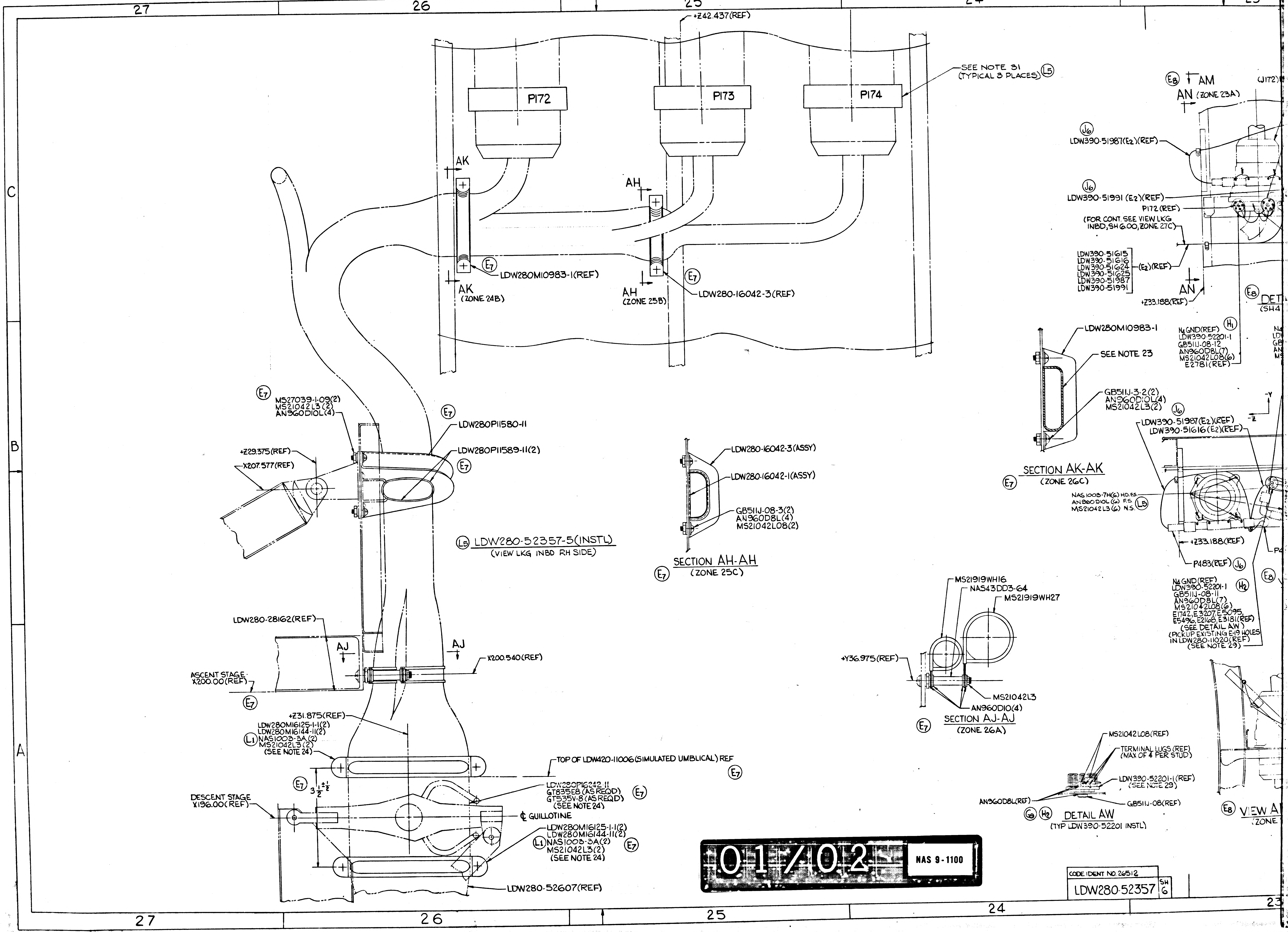
27
26
25
24
23
C
B
A
+Z42.437(REF)
SEE NOTE 31
(TYPICAL 3 PLACES) (L5)
P172
P173
P174
AK
AH
(E7) LDW280M10983-1(REF)
(E7) LDW280-16042-3(REF)
AK
(ZONE 24B)
AH
(ZONE 25B)
(E8) AM
AN (ZONE 23A)
(J172)
(J6) LDW390-51987(E2)(REF)
(J6) LDW390-51991 (E2)(REF)
P172(REF)
(FOR CONT. SEE VIEW LKG INBD, SH 6.00, ZONE 27C)
LDW390-51615
LDW390-51616
LDW390-51624
LDW390-51625
LDW390-51987
LDW390-51991
(E2)(REF)
AN
+Z33.188(REF)
(E8) DET
(SH4
N4 GND(REF)
LDW390-52201-1
GB511J-08-12
AN960D8L(7)
MS21042L08(6)
E2781(REF)
(H1)
LDW280M10983-1
SEE NOTE 23
GB511J-3-2(2)
AN960D10L(4)
MS21042L3(2)
-Y
-Z
(J6) LDW390-51987(E2)(REF)
LDW390-51616(E2)(REF)
SECTION AK-AK
(E7) (ZONE 26C)
NAS1003-7H(6) HD.FS
AN960D10L (6) F.S
MS21042L3(6) N.S. (L5)
+Z33.188(REF)
P483(REF) (J6)
P4
(E8)
N4 GND(REF)
LDW390-52201-1
GB511J-08-11
AN960D8L(7)
MS21042L08(6)
E1742, E3207, E5095,
E5496, E2168, E3181(REF)
(SEE DETAIL AW)
(PICKUP EXISTING E-19 HOLES IN LDW280-11020(REF)
(SEE NOTE 29)
(H2)
(E7) MS27039-1-09(2)
MS21042L3(2)
AN960D10L(4)
(E7) LDW280P11580-11
LDW280P11589-11(2)
(E7)
+Z29.375(REF)
X207.577(REF)
(L5) LDW280-52357-5(INSTL)
(VIEW LKG INBD RH SIDE)
LDW280-16042-3(ASSY)
LDW280-16042-1(ASSY)
GB511J-08-3(2)
AN960D8L(4)
MS21042L08(2)
SECTION AH-AH
(E7) (ZONE 25C)
MS21919WH16
NAS43DD3-64
MS21919WH27
+Y36.975(REF)
MS21042L3
AN960D10(4)
(E7) SECTION AJ-AJ
(ZONE 26A)
LDW280-28162(REF)
AJ
AJ
X200.540(REF)
ASCENT STAGE X200.00(REF)
(E7)
+Z31.875(REF)
LDW280M16125-1-1(2)
LDW280M16144-11(2)
(L1) NAS1003-3A(2)
MS21042L3(2)
(SEE NOTE 24)
TOP OF LDW420-11006(SIMULATED UMBLICAL) REF
(E7)
(E7) $3\frac{1}{2}\pm\frac{1}{2}$
LDW280P16242-11
GT835E8 (AS REQD)
GT535V-8 (AS REQD)
(SEE NOTE 24)
(E7)
DESCENT STAGE X196.00(REF)
℄ GUILLOTINE
LDW280M16125-1-1(2)
LDW280M16144-11(2)
(L1) NAS1003-3A(2)
MS21042L3(2)
(SEE NOTE 24)
(E7)
LDW280-52607(REF)
MS21042L08(REF)
TERMINAL LUGS (REF)
(MAX OF 4 PER STUD)
LDW390-52201-1(REF)
(SEE NOTE 29)
AN960D8L(REF)
GB511J-08(REF)
(G9) (H2) DETAIL AW
(TYP LDW390-52201 INSTL)
(E8) VIEW A
(ZONE
27
26
25
24
23

01/02 NAS 9-1100

CODE IDENT NO. 26512

LDW280-52357 SH 6

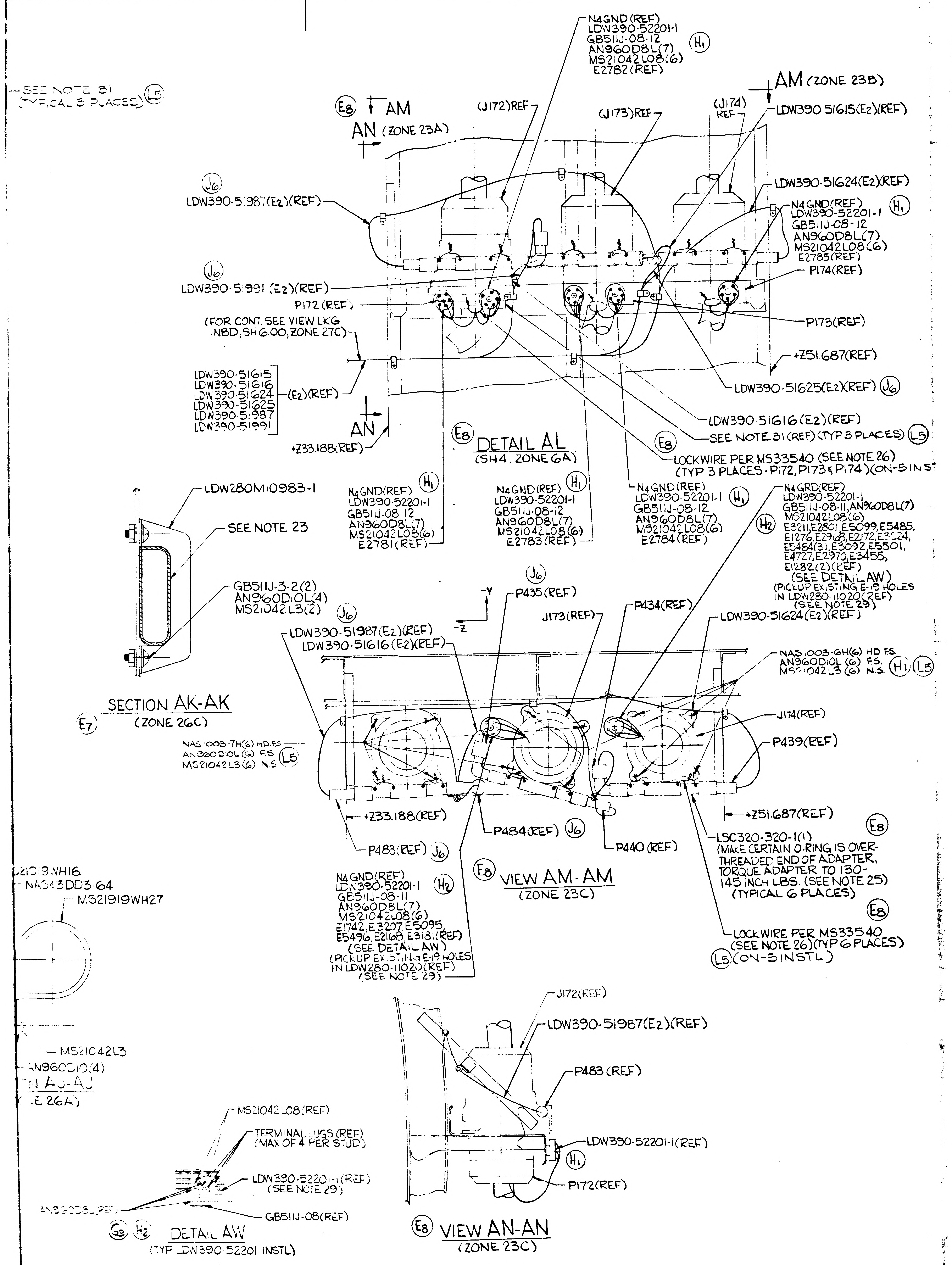

24
23
22
SEE NOTE 31 (TYPICAL 3 PLACES) L5
E8 AM
AN (ZONE 23A)
(J172) REF
(J173) REF
(J174) REF
AM (ZONE 23B)
N4 GND (REF)
LDW390-52201-1
GB511J-08-12
AN960D8L(7)
MS21042L08(6)
E2782 (REF)
H1
LDW390-51615(E2)(REF)
LDW390-51624(E2)(REF)
N4 GND (REF)
LDW390-52201-1
GB511J-08-12
AN960D8L(7)
MS21042L08(6)
E2785 (REF)
H1
P174 (REF)
J6
LDW390-51987(E2)(REF)
J6
LDW390-51991 (E2)(REF)
P172 (REF)
(FOR CONT SEE VIEW LKG INBD, SH 6.00, ZONE 27C)
P173 (REF)
+Z51.687 (REF)
LDW390-51615
LDW390-51616
LDW390-51624
LDW390-51625
LDW390-51987
LDW390-51991
(E2)(REF)
LDW390-51625 (E2)(REF) J6
AN
+Z33.188 (REF)
LDW390-51616 (E2)(REF)
SEE NOTE 31 (REF)(TYP 3 PLACES) L5
E8 DETAIL AL
(SH 4, ZONE 6A)
E8
LOCKWIRE PER MS33540 (SEE NOTE 26)
(TYP 3 PLACES - P172, P173 & P174)(ON-5 INST)
N4 GND (REF)
LDW390-52201-1
GB511J-08-12
AN960D8L(7)
MS21042L08(6)
E2781 (REF)
H1
N4 GND (REF)
LDW390-52201-1
GB511J-08-12
AN960D8L(7)
MS21042L08(6)
E2783 (REF)
H1
N4 GND (REF)
LDW390-52201-1
GB511J-08-12
AN960D8L(7)
MS21042L08(6)
E2784 (REF)
H1
N4 GRD (REF)
LDW390-52201-1
GB511J-08-11, AN960D8L(7)
MS21042L08(6)
E3211, E2801, E5099, E5485,
E1276, E2968, E2172, E3224,
E5484(3), E3092, E5501,
E4727, E2970, E3455,
E1282(2)(REF)
(SEE DETAIL AW)
(PICKUP EXISTING E-19 HOLES IN LDW280-11020 (REF)
(SEE NOTE 29)
H2
LDW280M10983-1
SEE NOTE 23
GB511J-3-2(2)
AN960D10L(4)
MS21042L3(2)
E7 SECTION AK-AK
(ZONE 26C)
J6
P435 (REF)
-Y
-Z
J173 (REF)
P434 (REF)
LDW390-51624 (E2)(REF)
J6
LDW390-51987 (E2)(REF)
LDW390-51616 (E2)(REF)
NAS1003-6H(6) HD FS
AN960D10(6) FS
MS21042L3(6) N.S. H1 L5
J174 (REF)
P439 (REF)
NAS1003-7H(6) HD FS
AN960D10L(6) FS
MS21042L3(6) N.S. L5
+Z33.188 (REF)
+Z51.687 (REF)
E8
P484 (REF) J6
P483 (REF) J6
P440 (REF)
LSC320-320-1(1)
(MAKE CERTAIN O-RING IS OVER-THREADED END OF ADAPTER, TORQUE ADAPTER TO 130-145 INCH LBS. (SEE NOTE 25)
(TYPICAL 6 PLACES)
E8
LOCKWIRE PER MS33540
(SEE NOTE 26)(TYP 6 PLACES)
L5 (ON-5 INSTL)
E8 VIEW AM-AM
(ZONE 23C)
N4 GND (REF)
LDW390-52201-1
GB511J-08-11
AN960D8L(7)
MS21042L08(6)
E1742, E3207, E5095,
E5496, E2168, E318 (REF)
(SEE DETAIL AW)
(PICKUP EXISTING E-19 HOLES IN LDW280-11020 (REF)
(SEE NOTE 29)
H2
21919WH16
NAS43DD3-64
MS21919WH27
MS21042L3
AN960D10(4)
N AJ-AJ
E 26A)
J172 (REF)
LDW390-51987(E2)(REF)
P483 (REF)
LDW390-52201-1(REF)
H1
P172 (REF)
E8 VIEW AN-AN
(ZONE 23C)
MS21042L08 (REF)
TERMINAL LUGS (REF)
(MAX OF 4 PER STUD)
LDW390-52201-1 (REF)
(SEE NOTE 29)
AN960D8L (REF)
GB511J-08 (REF)
G3 H2 DETAIL AW
(TYP LDW390-52201 INSTL)

CODE IDENT NO. 26512

LDW280-52357 SH 6

21

20

MANUFACTURING

UNLESS OTHERWISE NOTES CHECKED ✓ APPLY

PART NUMBER AND ALL OTHER MARKINGS IN REGION MARKED ▭ USE BOTH SIDES IF NECESSARY.

FILLET AND INSIDE CORNER RADII TOLERANCES
.016R TO .062R ± .010
.063R TO .250R ± .015
OVER .250R ± .030

DEPTH SHOWN FOR TAPPED HOLES IS FULL THDS. 2-3 IMP THDS. BEYOND PERMISSIBLE.

EXTERNAL THREAD LENGTH SHOWN INCLUDES 2 IMPERFECT THREADS MAX.

DO NOT CADMIUM PLATE & PAINT HOLES OR SURFACES MARKED WITH DOUBLE ASTERISK.

MISMATCH STEP OF ± .005 PERMISSIBLE DUE TO CHANGE OF CUTTERS AT INSIDE INTERSECTING SURFACES.

DIAMETERS MARKED MUST BE CONCENTRIC WITHIN FULL INDICATOR READING

HOLES MUST BE KEPT FREE OF CHROME PLATING SOLUTION.

ALL DIMENSIONS SHOWN TO BE MET AFTER CADMIUM PLATING. THICKNESS OF PLATE .0003 MIN. TO .0005 MAX. MIN. THICKNESS TO BE .0002 ON THREADED AREAS. NO ALLOWANCE FOR PLATING IN HOLES

125 SURFACE ROUGHNESS INCLUDING REAMED HOLES PER MIL-STD-10

200 FOR ALL DRILLED HOLES

REMOVE ALL BURRS. BREAK ALL EDGES .015-.031

INSPECTION INFORMATION MINIMUM PERMISSIBLE AVERAGE EDGE DISTANCE MARKED IS

SYMBOL ƒ DENOTES SURFACE TO BE MACHINED

UNLESS OTHERWISE SPECIFIED TOLERANCE ON FLANGES IS ± 1/32

LENGTHS OF AN, NAS & MS AL ALY RIVETS SHORTER THAN 1 INCH ARE NOT SPECIFIED.

TOLERANCE ON LOFTED DELINEATIONS IS

02/02 NAS 9-1100

A

LDW280-52357M

LEM	GRUMMAN AIRCRAFT ENGRG CORP., BETHPAGE, L. I., NEW YORK			
	SIZE J	CODE IDENT NO. 26512	LDW280-52357	1
MODEL OR END ITEM	SCALE 1/2			SHEET 6.00

THIS IS AN ORIGINAL DWG.

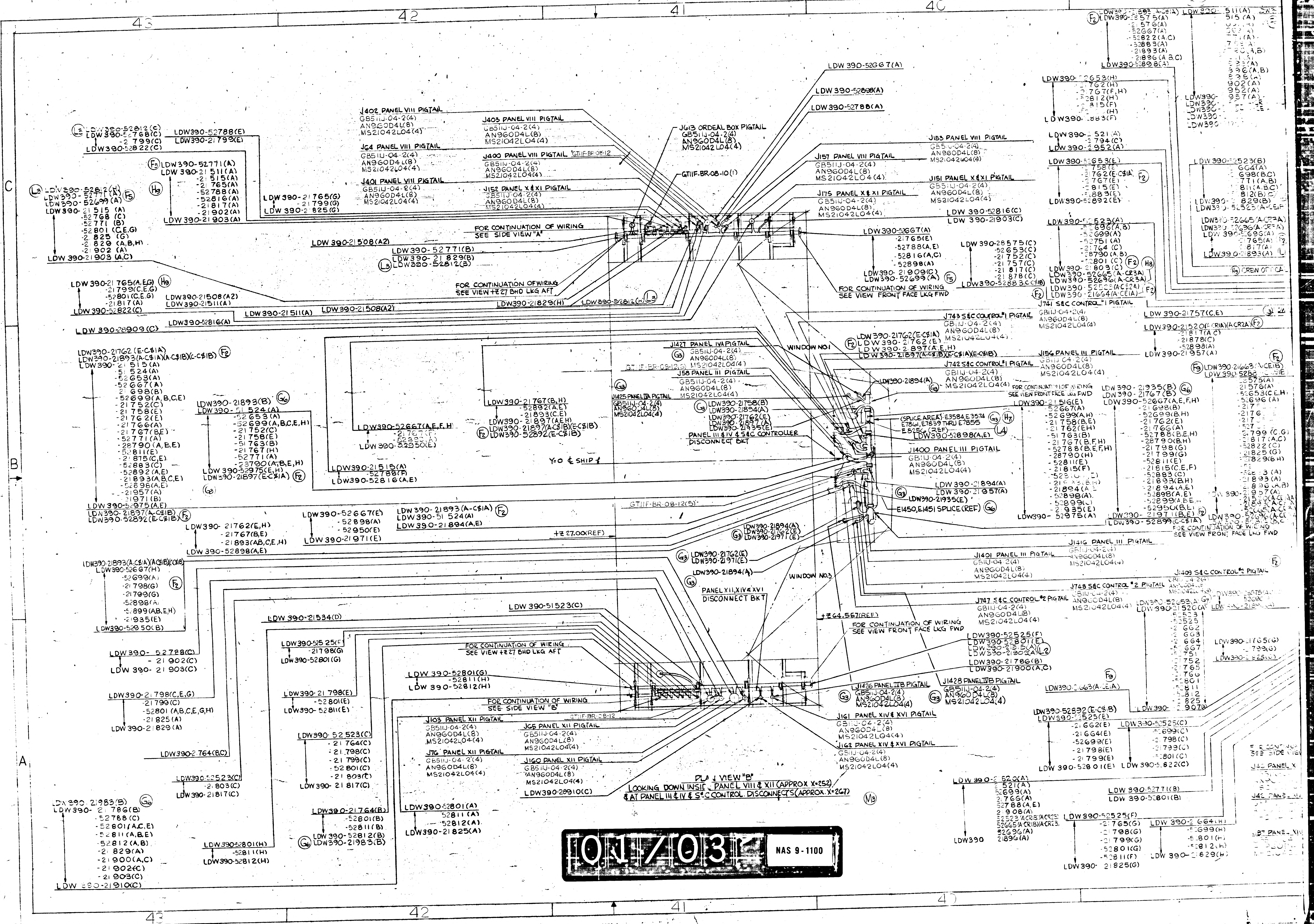

43
42
41
40
C
B
A
J402 PANEL VIII PIGTAIL
GB511J-04-2(4)
AN960D4L(8)
MS21042L04(4)
J403 PANEL VIII PIGTAIL
J64 PANEL VIII PIGTAIL
J400 PANEL VIII PIGTAIL
J401 PANEL VIII PIGTAIL
J152 PANEL X & XI PIGTAIL
J613 ORDEAL BOX PIGTAIL
GT11F-BR-08-10(1)
GT11F-BR-08-12
J153 PANEL VIII PIGTAIL
J157 PANEL VIII PIGTAIL
J151 PANEL X & XI PIGTAIL
J175 PANEL X & XI PIGTAIL
LDW390-52667(A)
LDW390-52898(A)
LDW390-52788(A)
LDW390-52788(E)
LDW390-21799(E)
LDW390-52771(A)
LDW390-21903(A)
LDW390-21765(G)
LDW390-21903(A,C)
LDW390-21508(A2)
LDW390-21511(A)
LDW390-52822(C)
LDW390-28909(C)
LDW390-52816(A)
LDW390-21829(H)
LDW390-52816(C)
LDW390-21903(C)
FOR CONTINUATION OF WIRING SEE SIDE VIEW "A"
FOR CONTINUATION OF WIRING SEE VIEW +Z 27 BHD LKG AFT
FOR CONTINUATION OF WIRING SEE VIEW FRONT FACE LKG FWD
J743 S&C CONTROL #1 PIGTAIL
J741 S&C CONTROL #1 PIGTAIL
J742 S&C CONTROL #1 PIGTAIL
J156 PANEL III PIGTAIL
J1427 PANEL IVA PIGTAIL
J58 PANEL III PIGTAIL
J1425 PANEL IVA PIGTAIL
PANEL III & IV & S&C CONTROLLER DISCONNECT BKT
WINDOW NO.1
(SPLICE AREA) E3584, E3574 E7861, E7839 THRU E7855 E6256 (REF)
J1400 PANEL III PIGTAIL
E1450, E1451 SPLICE (REF)
Y=0 & SHIP
GT11F-BR-08-12(5)
+Z 27.00(REF)
J1416 PANEL III PIGTAIL
J1401 PANEL III PIGTAIL
J1409 S&C CONTROL #2 PIGTAIL
J748 S&C CONTROL #2 PIGTAIL
J747 S&C CONTROL #2 PIGTAIL
WINDOW NO.3
PANEL XII, XIV & XVI DISCONNECT BKT
+Z 64.567(REF)
FOR CONTINUATION OF WIRING SEE VIEW FRONT FACE LKG FWD
FOR CONTINUATION OF WIRING SEE VIEW +Z 27 BHD LKG AFT
FOR CONTINUATION OF WIRING SEE SIDE VIEW "B"
J1426 PANEL IVB PIGTAIL
J1428 PANEL IVB PIGTAIL
J103 PANEL XII PIGTAIL
J65 PANEL XII PIGTAIL
J76 PANEL XII PIGTAIL
J160 PANEL XII PIGTAIL
J161 PANEL XIV & XVI PIGTAIL
J162 PANEL XIV & XVI PIGTAIL
LDW390-51523(C)
LDW390-21534(D)
LDW390-21764(BC)
LDW390-21983(B)
LDW390-21910(C)
LDW390-21825(A)
LDW390-28910(C)
LDW390-52525(F)
LDW390-21786(B)
LDW390-21900(A,C)
LDW390-52771(B)
LDW390-52801(B)
LDW390-21629(H)
LDW390-21825(G)
CREW OFF CA

PLAN VIEW "B" LOOKING DOWN INSIDE PANEL VIII & XII (APPROX X=252) & AT PANEL III & IV & S&C CONTROL DISCONNECTS (APPROX X=267)

01/031 NAS 9-1100

39
38
37
36
35
CREW OPTICAL ALIGNMENT SIGHT (16A6) (REF)
FOR CONTINUATION OF WIRING SEE SIDE VIEW "A"
J1434 PANEL X & XI PIGTAIL
J1419 PANEL X & XI PIGTAIL
J154 L.M.P. INTERCONNECT
(YELLOW) (SEE NOTE 30) J60 PANEL X & XI PIGTAIL
(BLACK) (SEE NOTE 30) J99 PANEL X & XI PIGTAIL
(GRAY) (SEE NOTE 30) J773 PANEL X & XI PIGTAIL
(WHITE) (SEE NOTE 30) J70 PANEL X & XI PIGTAIL
(YEL/BLK) (SEE NOTE 30) J105 PANEL X & XI PIGTAIL
GB511J-04-2(4)
AN960D4L(8)
MS21042L04(4)
NAS43DD-32(5)
NAS43DD3-40
SPLICE AREA E6869 E6870 (REF)
SPLICE AREA E6871 E6872 (REF)
E6873(N4)(REF)
GT11F-BR08-10
J56 (REF)
J88 (REF)
E1503 E1504 (REF)
WINDOW NO. 2 (REF)
LIGHT (REF)
(ZONE 34B)
(ZONE 33A)
A.O.T. (REF) J772
NAS43DD3-40(2)
HANDGRIP
E3784
E3788
E3786, E3790
E7911, E7912, E7913 (REF)
E1505, E1506
GT11F-BR-08-12(1)
P143A
P144A
AU
AZ
AV
Y-OR-SHIP J181
E1464 E1465
GT11F-BR-08-12(3)
J1811
J1411 GSE
J771 PANEL I PIGTAIL
J468 PANEL I PIGTAIL
J469 PANEL I PIGTAIL
J155 PANEL I PIGTAIL
J306 PANEL II PIGTAIL
J305 PANEL II PIGTAIL
J159 PANEL II PIGTAIL
J158 PANEL II PIGTAIL
J41 PANEL II PIGTAIL
J57 PANEL II PIGTAIL
FOR CONTINUATION OF WIRING SEE VIEW FRONT FACE LKG FWD
J57 (REF)
P810 (REF)
P181 (REF)
NAS43DD3-32(1)
NAS43DD3-32(2)
SPLICE E8100 (REF)
SPLICE E7950 E6200 E6199 (REF)
SPLICE E7967 E7968 (REF)
J1409 S&C CONTROL #2 PIGTAIL
S&C CONTROL #2 PIGTAIL
PANEL III PIGTAIL
FOR CONTINUATION OF WIRING SEE SIDE VIEW "B"
J46 PANEL XIV & XVI PIGTAIL
J42 PANEL XIV & XVI PIGTAIL
J58 PANEL XIV & XVI PIGTAIL
J72 PANEL XIV & XVI PIGTAIL
J495 PANEL XIV & XVI PIGTAIL
J146 PANEL XIV & XVI PIGTAIL
J87 PANEL XIV & XVI PIGTAIL
+Z 27.00 (REF)
+Z 33.188
+Z 42.457 (REF)
+Z 51.687 (REF)
+Z 64.557 (REF)
PLAN VIEW "A"
LOOKING DOWN-TOP OF CABIN SKINS REMOVED
LDW280-52357-9 INSTL
PANEL I (REF)
PANEL II (REF)
J56 (REF)
J88 (REF)
LDW340-52125 (REF)
J57 (REF)
VIEW AV-AV
(ZONE 37B)
F2
F9
G2
G6
G7
G8
G9
H6
H8
H9
H10
J7
K3
K4
L2
L3

02/03

NAS 9-1100

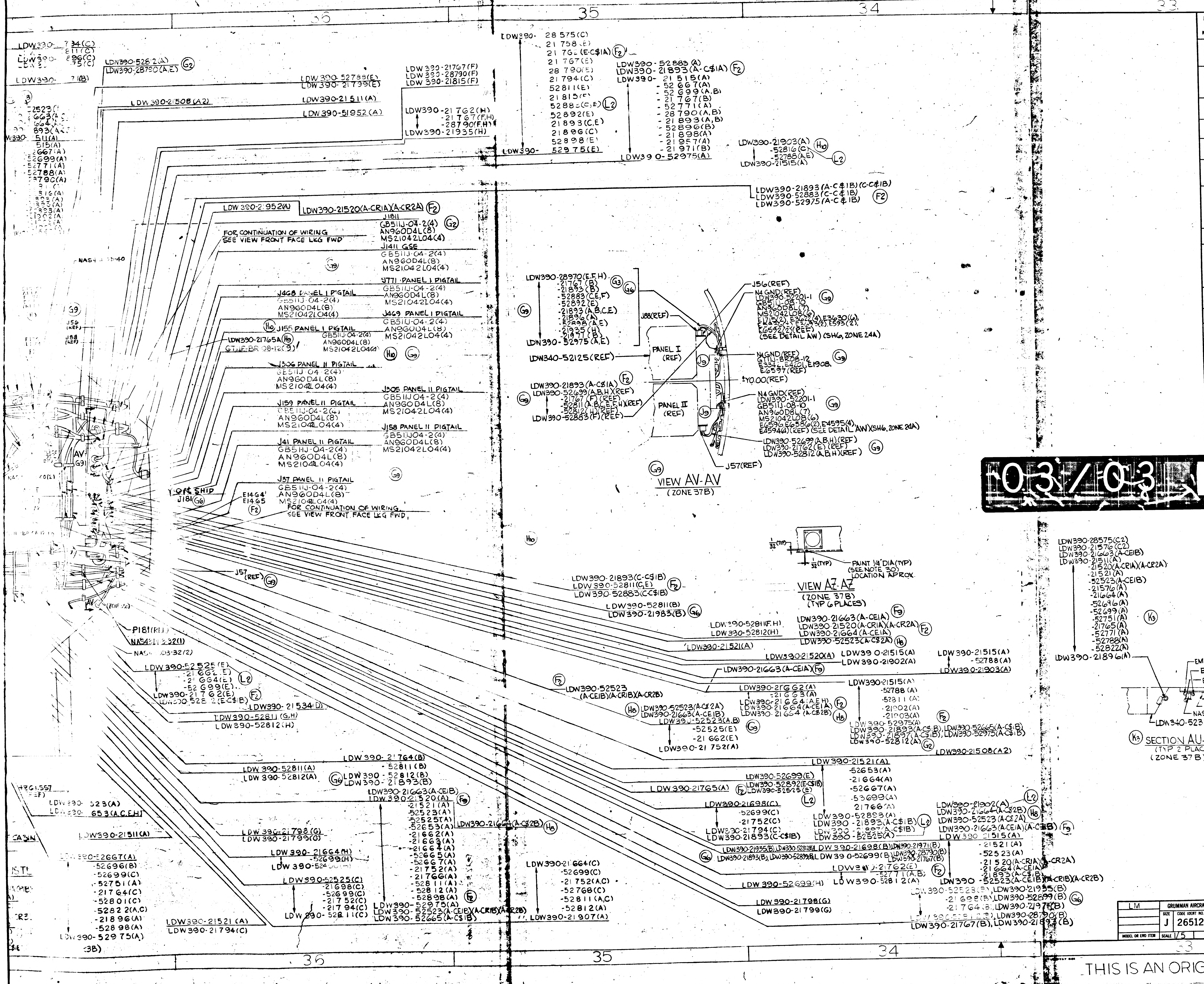
36
35
34
33
LDW390-28575(C)
21758(E)
21762(E-C$1A)
21767(E)
28790(E)
21794(C)
52811(E)
21815(E)
52883(C,E)
52892(E)
21893(C,E)
21896(C)
52898(E)
LDW390-52975(E)
LDW390-52883(A)
LDW390-21893(A-C$1A)
LDW390-21515(A)
-52667(A)
-52699(A,B)
-21767(B)
-52771(A)
-28790(A,B)
-21893(A,B)
-52896(B)
-21898(A)
-21957(A)
-21971(B)
LDW390-52975(A)
LDW390-52812(A)
LDW390-28790(A,E)
LDW390-52789(E)
LDW390-21799(E)
LDW390-21767(F)
LDW390-28790(F)
LDW390-21815(F)
LDW390-21511(A)
LDW390-21508(A2)
LDW390-51952(A)
LDW390-21762(H)
-21767(F,H)
-28790(F,H)
LDW390-21935(H)
LDW390-21903(A)
-52816(C)
-52788(A,E)
LDW390-21515(A)
LDW390-21893(A-C$1B)(C-C$1B)
LDW390-52883(C-C$1B)
LDW390-52975(A-C$1B)
LDW390-21952(A)
LDW390-21520(A-CR1A)(A-CR2A)
J1811
GB511J-04-2(4)
AN960D4L(8)
MS21042L04(4)
FOR CONTINUATION OF WIRING SEE VIEW FRONT FACE LKG FWD
J1411 GSE
GB511J-04-2(4)
AN960D4L(8)
MS21042L04(4)
J771 PANEL I PIGTAIL
J468 PANEL I P'GTAIL
J469 PANEL I PIGTAIL
J155 PANEL I PIGTAIL
J306 PANEL II PIGTAIL
J305 PANEL II PIGTAIL
J159 PANEL II PIGTAIL
J158 PANEL II PIGTAIL
J41 PANEL II PIGTAIL
J57 PANEL II PIGTAIL
LDW390-21765A
GT1JF-BR 08-12(9)
Y-OPS SHIP
J181
E1464
E1465
FOR CONTINUATION OF WIRING SEE VIEW FRONT FACE LKG FWD.
LDW390-28970(E,F,H)
-21767(B)
-21893(B)
-52883(C,E,F)
-52892(E)
-21893(A,B,C,E)
-21896(A)
-52898(A,E)
-21935(H)
-21971(B,E)
LDW390-52975(A,E)
J88(REF)
LDW340-52125(REF)
PANEL I (REF)
PANEL II (REF)
LDW390-21893(A-C$1A)
LDW390-52699(A,B,H)(REF)
-21767(F)(REF)
-52811(A,B,C,E,F,H)(REF)
-52812(A)(REF)
LDW390-52883(F)(REF)
J56(REF)
N4 GND(REF)
LDW390-52201-1
GB511J-08-10
AN960D8L(7)
MS21042L08(6)
(SEE DETAIL AW)(SH6, ZONE 24A)
N4 GND(REF)
GT1JF-BR08-12
E334, E420, E1908
E6597(REF)
Y0.00(REF)
N4 GND(REF)
LDW390-52201-1
GB511J-08-10
AN960D8L(7)
MS21042L08(6)
(SEE DETAIL AW)(SH6, ZONE 24A)
LDW390-52699(A,B,H)(REF)
LDW390-21762(E)(REF)
LDW390-52812(A,B,H)(REF)
J57(REF)
VIEW AV-AV
(ZONE 37B)
PAINT 1/4 DIA(TYP)
(SEE NOTE 30)
LOCATION APROX.
VIEW AZ-AZ
(ZONE 37B)
(TYP 6 PLACES)
J57 (REF)
P181(REF)
LDW390-52525(E)
-21662(E)
-21664(E)
-52699(E)
LDW390-21762(E)
LDW390-52812(E-C$1B)
LDW390-21534(D)
LDW390-52811(G,H)
LDW390-52812(H)
LDW390-21893(C-C$1B)
LDW390-52811(C,E)
LDW390-52883(C-C$1B)
LDW390-52811(B)
LDW390-21983(B)
LDW390-52811(F,H)
LDW390-52812(H)
LDW390-21663(A-CE1A)
LDW390-21520(A-CR1A)(A-CR2A)
LDW390-21664(A-CE1A)
LDW390-52523(A-C$2A)
LDW390-21521(A)
LDW390-21520(A)
LDW390-21515(A)
LDW390-21902(A)
LDW390-21663(A-CE1A)
LDW390-21515(A)
-52788(A)
LDW390-21903(A)
LDW390-52523
(A-CE1B)(A-CR1B)(A-CR2B)
LDW390-52523(A-C$2A)
LDW390-21663(A-CE1B)
LDW390-52523(A,B)
-52525(E)
-21662(E)
LDW390-21752(A)
LDW390-21515(A)
-52788(A)
-52811(A)
-21902(A)
-21903(A)
LDW390-52975(A)
LDW390-21893(A-C$1B)
LDW390-21897(A-C$1B)
LDW390-52812(A)
LDW390-52665(A-C$1B)
LDW390-52975(A-C$1B)
LDW390-21508(A2)
LDW390-28575(C2)
LDW390-21576(C2)
LDW390-21663(A-CE1B)
LDW390-21511(A)
-21520(A-CR1A)(A-CR2A)
-21521(A)
-52523(A-CE1B)
-21576(A)
-21664(A)
-52696(A)
-52699(A)
-52751(A)
-21765(A)
-52771(A)
-52788(A)
-52822(A)
LDW390-21896(A)
EMI-C&C-C$1B(REF)
EMI-E(REF)
EMI-A-CS2A(A-CE1A)
EMI-G(REF)
EMI-H(REF)
NAS43DD3-48
NAS43DD3-56
LDW340-52321(REF)
SECTION AU-AU
(TYP 2 PLACES)
(ZONE 37B)
LDW280-52357
LDW390-21764(B)
LDW390-52811(A)
LDW390-52812(A)
LDW390-52811(B)
LDW390-52812(B)
LDW390-21893(B)
LDW390-21663(A-CE1B)
LDW390-21520(A)
-21521(A)
-52523(A)
-52525(A)
-52653(A)
-21662(A)
-21663(A)
-21664(A)
-52665(A)
-52667(A)
-21752(A)
-21766(A)
-52811(A)
-52812(A)
-52898(A)
LDW390-52975(A)
LDW390-52523(A-CE1B)(A-CR1B)(A-CR2B)
LDW390-52665(A-C$1B)
LDW390-21664(A-C$2B)
LDW390-21521(A)
-52653(A)
-21664(A)
-52667(A)
-53699(A)
-21766(A)
LDW390-52699(E)
LDW390-52892(E)
LDW390-52515(E)
LDW390-21765(A)
LDW390-21698(C)
-52699(C)
-21752(C)
LDW390-21794(C)
LDW390-21893(C-C$1B)
LDW390-52893(A)
LDW390-21893(A-C$1B)
LDW390-21902(A)
LDW390-21664(A-C$2B)
LDW390-52523(A-C$2A)
LDW390-21663(A-CE1A)(A-C$1B)
LDW390-21515(A)
-21521(A)
-52523(A)
-21520(A-CR1A)(A-CR2A)
-21664(A-C$1B)
-21893(A-C$1B)
LDW390-52523(A-CE1B)(A-CR1B)(A-CR2B)
LDW390-21698(B)
LDW390-52699(B)
LDW390-21935(B)
LDW390-21971(B)
LDW390-28790(B)
LDW390-21767(B)
LDW390-52699(H)
LDW390-52812(A)
LDW390-21762(E)
-52771(A,B)
LDW390-21798(G)
LDW390-21799(G)
LDW390-21767(B)
LDW390-21798(G)
LDW390-21799(G)
LDW390-21511(A)
LDW390-52667(A)
-52696(B)
-52699(C)
-52751(A)
-21764(C)
-52801(C)
-52822(A,C)
-21896(A)
-52898(A)
LDW390-52975(A)
LDW390-21664(H)
LDW390-52699(H)
LDW390-52525(C)
-21698(C)
-52699(C)
-21752(C)
-21794(C)
LDW390-52811(C)
LDW390-21664(C)
-52699(C)
-21752(A,C)
-52768(C)
-52811(A,C)
-53812(A)
LDW390-21907(A)
LDW390-21521(A)
LDW390-21794(C)
LDW390-523(A)
LDW390-653(A,C,E,H)
A
B
C
F2
G2
G3
G6
G9
H6
H8
H10
L2
K3

MANUFACTURING OPERATIONS
UNLESS OTHERWISE SPECIFIED
NOTES CHECKED √ APPLY TO THIS DWG.

PART NUMBER AND ALL OTHER MARKINGS IN REGION MARKED ▭ USE BOTH SIDES IF NECESSARY.	
FILLET AND INSIDE CORNER RADII TOLERANCES .016R TO .062R ± .010 .063R TO .250R ± .015 OVER .250R ± .030	
DEPTH SHOWN FOR TAPPED HOLES IS FULL THDS. 2-3 IMP THDS. BEYOND PERMISSIBLE.	
EXTERNAL THREAD LENGTH SHOWN INCLUDES 2 IMPERFECT THREADS MAX.	
DO NOT CADMIUM PLATE & PAINT HOLES OR SURFACES MARKED WITH DOUBLE ASTERISK.	
MISMATCH STEP OF ± .005 PERMISSIBLE DUE TO CHANGE OF CUTTERS AT INSIDE INTERSECTING SURFACES.	
DIAMETERS MARKED MUST BE CONCENTRIC WITHIN FULL INDICATOR READING	
HOLES MUST BE KEPT FREE OF CHROME PLATING SOLUTION.	
ALL DIMENSIONS SHOWN TO BE MET AFTER CADMIUM PLATING. THICKNESS OF PLATE .0003 MIN. TO .0005 MAX. MIN. THICKNESS TO BE .0002 ON THREADED AREAS. NO ALLOWANCE FOR PLATING IN HOLES	
125 √ SURFACE ROUGHNESS INCLUDING REAMED HOLES PER MIL-STD-10	
200 √ FOR ALL DRILLED HOLES	
REMOVE ALL BURRS. BREAK ALL EDGES .015-.031	
INSPECTION INFORMATION MINIMUM PERMISSIBLE AVERAGE EDGE DISTANCE MARKED IS	
SYMBOL √ DENOTES SURFACE TO BE MACHINED	
UNLESS OTHERWISE SPECIFIED TOLERANCE ON FLANGES IS ± 1/32	
LENGTHS OF AN, NAS & MS AL ALY RIVETS SHORTER THAN 1 INCH ARE NOT SPECIFIED.	
TOLERANCE ON LOFTED DELINEATIONS IS	

DWG SIZE 34 X 110

PRINTING INFO ONLY
FULL SIZE SHEET AREA (36 X 120)= 30.0 SQ. FT.
1/2 SIZE SHEET AREA (1/4 OF FULL)= 7.5 SQ. FT.

PRINT TRIM LINE

03/03

NAS 9-1100

LM	GRUMMAN AIRCRAFT ENGRG CORP., BETHPAGE, L. I., NEW YORK			
	SIZE J	CODE IDENT NO. 26512	LDW280-52357	Y
MODEL OR END ITEM	SCALE 1/5		SHEET 8.20	

THIS IS AN ORIGINAL DRAWING

53
52
51
50
C
B
A
PANEL II PIGTAILS
J35
J56
J304
PANEL I PIGTAIL
J55
FOR WIRE ROUTING SEE PLAN VIEW "A"
J772
J71
FOR CONTINUATION OF WIRING SEE PLAN VIEW "A"
FOR CONTINUATION OF WIRING SEE PLAN VIEW "A"
LDW390-52699(E)
LDW390-52892(E-C$3)
LDW390-52525(E)
LDW390-21534(D)
LDW390-52699(B)
-21767(B)
-28790(B)
-21893(B)
-21896(B)
LDW390-21971(B)
LDW390-21515(A)
-52667(A)
-52699(A)
-52771(A)
-28790(A)
-21893(A)
-52898(A)
-21957(A)
LDW390-52975(A)
LDW390-21893(A-C$1A)
LDW390-52883(A)
LDW390-28575(C)
-21758(E)
-21762(E-C$1A)
-21767(E)
-28790(E)
-21794(C)
-52811(E)
-21815(E)
-52883(C,E)
-52892(E)
-21893(E,C)
-21896(C)
-52898(E)
LDW390-52975(E)
LDW390-52699(H)
-21762(H)
-21767(F,H)
-28790(F,H)
-21815(F)
LDW390-21935(H)
TO J39 FROM P89A
Y-0 ℄ SHIP
NAS43DD3-24(2)
NAS43DD3-48
LDW390-21798(G)
LDW390-21799(G)
LDW390-52699(H)
LDW390-21521(A)
LDW390-21794(C)
NAS43DD3-40(2)
NAS43DD3-48(2)
NAS43DD3-40
LDW390-21534(D)
PANEL I
PANEL II
E7899,E7900(REF)
E3859,E3860 SPLICE (REF)
LDW390-52699(A)
E3624,E3625 SPLICE (REF)
GA2201T(REF),20RT9(REF)
LDW390-28922(E)
LDW390-52400(H)
STRUCT BOND PER LPC280-23 (TYP 3 PLACES)
E4662 & E4663(REF)
J168 FOR WIRE ROUTING SEE PLAN VIEW "A"
LDW390-28575(C)
-52699(C)
-21766(A)
-28790(A,B,E,F,H)
-52892(A)
LDW390-21896(B,C)
E4658 & E4659 (REF)
NAS43DD3-32
P89A
LDW390-21767(F)
LDW390-21815(F)
GT11F-BR-08-12(5)
LDW390-21762(E-C$1A)
LDW390-21698(B,C)
J402
GB511J-04-2(4)
AN960D4L(8)
MS21042L04(4)
GA2203T1 20RT11 (REF)
LDW390-21516(E)
-52667(A)
-52699(A)
-21762(E)
-51763(B)
-21765(E)
-21767(B)
-52788(B,E,F,H)
-52811(E)
-52816(A,E)
-52898(A)
-52899(C)
-28922(E)
-21935(E,H)
LDW390-52875(A)
NAS43DD3-24
WINDOW NO. 1
P1425 & P1427 PIGTAILS FROM PANEL IIA (REF)
PANEL XI
NAS43DD3-32
WINDOW NO. 3
GIMBAL ANGLE SEQUENCE TRANSLATION ASSY
(SPLICE AREA) E3444 & E3589 (REF)
E1462 E1463
PANEL XVI
LDW280-16030-45(3)
LDW280-16030-49(3)
GB511J-08-3(6)
AN960D8L(12)
MS21042L08(6)
GT11F-BR-08-12
PANEL X
16DS64(REF) LIGHT
NAS43DD3-32(2)
NAS43DD3-24(3)
E7908 E7909(REF)
LIGHT
P1426 P1428 REF
16DS66(REF)
LDW390-21893 A-C$1
LDW390-21897 (A-C$1
J706A
GB511J-04-2(4)
AN960D4L(8)
MS21042L04(4)
NAS43DD3-32(2)
PANEL III
LDW280-16030-45(3)
LDW280-16030-49(3)
(SPLICE AREA) E7837 & E7838 (REF)
LDW390-21762(E)
LDW390-21935(E,H)
PANEL V
PANEL VI
PANEL VIII
PANEL XIV
PANEL IV
PANEL VI LIGHT PIGTAIL
LDW390-21894(A,E)
PANEL V LIGHT PIGTAIL
TRANSLATION CONTROLLER NO. 1
X 2524 ℄ SHIP
LDW390-52811(E)
LDW390-52975(A)
STRUCT BOND PER LPC230-23 (TYP 3 PLACES)
LDW390-52667(A)
-21765(E)
-52788(A,E)
-52816(A,C)
-52898(A)
LDW390-28909(C)
LDW390-52699(A)
GT11F-BR-08-12
NAS43DD3-32(4)
PANEL XII
FOR CONTINUATION OF WIRING SEE PLAN VIEW "B"
J59
GB511J-04-2(4)
AN960D4L(8)
MS21042L04(4)
REEL
REEL
J708
GB511J-04-2(4)
AN960D4L(8)
MS21042L04(4)
FOR CONTINUATION OF WIRING SEE SIDE VIEW "A"
LDW390-52699(A)
LDW390-52667(A)
-51763(A,B)
-21767(B)
-52788(B)
-52816(A)
LDW390-52898(A)
GT11F-BR-08-12
J709B
GB511J-04-2(4)
AN960D4L(8)
MS21042L04(4)
FOR CONTINUATION OF WIRING SEE PLAN VIEW "B"
LDW390-21516(E)
-21765(E)
-52788(E)
-52816(E)
LDW390-28922(E)
MISSION PROGRAMMER BOXES
P1425 P1427 REF
FWD HATCH
NAS43DD3-48
ATTITUDE CONTROLLER ASSY NO. 2
J69 FROM J58
GB511J-04-2(4)
AN960D4L(8)
MS21042L04(4)
LDW390-52788(F,H)
J63
GB511J-04-2(4)
AN960D4L(8)
MS21042L04(4)
J730
GB511J-04-2(4)
AN960D4L(8)
MS21042L04(4)
LDW390-52699(A)
-21762(E)
-51763(A,B)
-52898(A)
LDW390-52899(C)
PANEL IIA (REF)
PANEL IIB (REF)
LDW390-21516(E)
X215 ℄ TOP OF FLOOR
LDW390-21758(B,E)
-51763(B)
-21765(E)
-21893(B,H)
-21894(A,E)
LDW390-28922(E)
LDW390-21515(A)
-51524(A)
-52653(A)
-52667(A)
-21698(B)
-52699(A,B,C,E)
-21752(C)
-21758(E)
-21762(E-C$1A)
-21766(A)
-21767(B,E)
-52771(A)
-28790(A,B,E)
-52811(E)
-21815(C,E)
-52883(A,C,E)
-52892(A,E)
-21893(A,B,C,E)
-52898(A,E)
-21957(A)
-21971(B)
LDW390-52975(A,E)
LDW390-21893(A-C$1A)(A-C$1B)(C-C$1B)
LDW390-21897(A-C$1B)
LDW390-52892(E-C$1B)
LDW390-52525(A,E)
LDW390-21894(A,E)
GB511J-08-2(2)
AN960D8L(4)
GN512CF-08C(2)
GARMENT RACK
FOR CONTINUATION OF WIRING SEE SIDE VIEW "B"
SPLICE AREA
E8133
E8134
E8135
E8136
E8257
P229
GB511J-04-2(4)
AN960D4L(8)
MS21042L04(4)
J708A
GB511J-04-2(4)
AN960D4L(8)
MS21042L04(4)
LDW390-52525(F)
VIEW FRONT FACE LOOKING FWD
P1426 & P1428 PIGTAILS FROM PANEL IIB (REF)
ATTITUDE CONTROLLER ASSY NO. 1
LDW390-21765(E)
-21893(H,B)
LDW390-21894(A,E)
J709A
GB511J-04-2(4)
AN960D4L(8)
MS21042L04(4)
TRANSLATION CONTROLLER NO. 2
J229
J706B
LDW390-28922(E)
P229A
LDW390-21758(B,E)
-51763(B)
LDW390-28922(E)
F2
F5
G3
G4
K1
K5
L2
L4
L9
J3
J8
M4

01/03

NAS 9-1100

49
48
47
46
45
LDW390-21521(A)
-52653(A)
-21664(A)
-52667(A)
-52699(A)
-21766(A)
LDW390-52898(A)
LDW390-21893(A-C$IB)
LDW390-21897(A-C$IB)
LDW390-21664(A-C$2B)
LDW390-52525(A)
LDW390-21698(C)
-52699(C)
-21752(C)
LDW390-21794(C)
LDW390-21893(C-C$IB)
LDW390-2534(D)
LDW390-21698(B)
LDW390-21699(B)
-21935(B)
-52899(B)
-21971(B)
-28790(B)
-21767(B)
-21893(B)
LDW390-52812(B)
LDW390-21798(G)
LDW390-21799(G)
LDW390-52669(H)
LDW390-5524(A)
-21664(A)
LDW390-21815(C)
LDW390-21664(A-C$2B)
SPLICE (REF)
LDW390-52667(A,E,F,H)
-52899(A,B,E,H)
LDW390-52950(B,E)
LDW390-52899(C-C$IA)
LDW390-52400(H)
FOR WIRE ROUTING SEE PLAN VIEW "A"
LDW390-21698(B,C)
GA2203T1 20RT11 (REF)
J602
LDW390-21698(H)
LDW390-28790(H)
GIMBAL ANGLE SEQUENCE TRANSLATION ASSY
PANEL XVI
GT11F-BR-08-12
LDW390-21698(B,H)
-21699(B,H)
-21766(A,E)
-52788(B,H)
-28790(B,H)
-52811(E)
-21815(C,E,F)
-52883(C)
-21893(B)
-21894(A,E)
LDW390-52898(A,E)
LDW390-21971(B)
LDW390-52812(B)
LDW390-21893(B)
LDW390-21893(A-C$IB)
LDW390-21897(A-C$IB)
(SPLICE AREA) E7837 & E7838 (REF)
PANEL XIV
LDW390-21894(A,E)
X252 ℄ SHIP
STRUCT BOND PER LPC280-23 (TYP 3 PLACES)
PANEL XII
7086 GB511J-04-2(4) AN960C04(8) MS21042L04(4)
LDW390-52788(B,H)
-52801(E)
-21893(B,H)
LDW390-21894(A,E)
LDW390-21971(B)
LDW390-52812(B)
LDW390-21893(B)
7098 GB511J-04-2(4) AN960C04(8) MS21042L04(4)
FOR CONTINUATION OF WIRING SEE PLAN VIEW "B"
LDW390-52525(F)
LDW390-52801(E)
ATTITUDE CONTROLLER ASSY NO.2
LDW390-21766(A,B,E)
-52811(A,E)
LDW390-52898(A,E)
J63
J730
LDW390-21815(C,E,F)
LDW390-52883(C)
LDW390-52525(F)
LDW390-21815(F)
GARMENT RACK
LDW390-52698(H)
-52699(H)
LDW390-28790(H)
FOR CONTINUATION OF WIRING SEE SIDE VIEW "B"
LDW390-52801(E)
-52811(E)
-21815(E)
LDW390-52898(E)
LDW390-21766(E)
LDW390-21815(C)
LDW390-52883(C)
LDW390-21766(A)
LDW390-52898(A)
LDW390-21698(B)
-52699(B)
LDW390-28790(B)
LDW390-21762(E)
-52788(E)
LDW390-21971(B,E)
7068
AN960C04L(8)
MS21042L04(4)
LDW390-52698(B,H)
-52699(B,H)
LDW390-28790(B,H)
LDW390-21758(B,E)
-51763(B)
LDW390-28922(E)
FOR WIRE ROUTING SEE PLAN VIEW "A"
J143
J144
℄ SHIP Y-0
FOR WIRE ROUTING SEE SIDE VIEW "B"
J73
J44
PANEL XVI PIGTAILS
J74
J97
PANEL XVI
PANEL XI
PANEL XIV
PANEL X
J1104
J1110
J1119
J1126
J1116
J1123
J1113
J1103
PANEL XII PIGTAILS (SEE NOTE 21)
PANEL XII
PANEL VIII
DATA STORAGE ELECTRONICS ASSY
J900
X252 ℄ SHIP
PANEL XVI PIGTAIL
J80
FOR CONTINUATION OF WIRING SEE PLAN VIEW "B"
GARMENT RACK
EMERGENCY OXYGEN LH & RH
FOR CONTINUATION OF WIRING SEE DWG LDW280-52358(REF)
MISSION PROGRAMMER BOXES
LDW390-21983(B)
LDW390-21786(B)
-52788(C)
-52801(A,C,E)
-52811(A,B,E)
-52812(A,B)
-21829(A)
-21900(A,C)
-21902(C)
-21903(C)
LDW390-28810(C)
NAS43DD3-32(9)
NAS43DD3-32(9)
LDW390-52812(H)
E7914, E7915, E7916, E7910 (REF)
X215 ℄ TOP OF FLOOR
LDW390-52801(G)
-52811(H)
LDW390-52812(H)
FOR CONTINUATION OF WIRING SEE SIDE VIEW "B"
LDW390-21698(B,H)
-52699(B,H)
LDW390-28790(B,H)
P608
LDW280-11568(REF)
AUXILIARY SWITCHING RELAY BOX
P1
LIGHTING CONTROL ASSY
VIEW +327 BHD LOOKING AFT
GT11F-BR-08-12
LDW390-21698(B,H)
-52699(B,H)
-21767(B,E,H)
-28790(B,H)
-52811(A,B,E,H)
-52812(A,B,H)
LDW390-52883(A,H)
LDW390-21893(B)
LDW390-21901(F)
LDW390-21785(F)
LDW390-21767(H)
-52889(H)
LDW390-21901(H)
LDW390-21516(E)
-21767(E)
-52768(E)
-21785(E)
-52788(E)
LDW390-21901(E)
LDW390-52847(C)
LDW390-21901(C)
LDW390-52655(A)
-52788(A)
-21852(A)
-52883(A)
-52898(A)
-21901(A)
LDW390-21903(A)
J96 PANEL XI PIGTAIL
J15 FOR WIRE ROUTING SEE SIDE VIEW "A"
LDW390-52801(A)
-21825(G)
LDW390-21829(A,B,H)
J1134
J407
J406
PANEL VIII PIGTAILS
J81
PANEL XI PIGTAIL
LDW390-52812(H)
LDW390-21515(A)
-52768(C)
-52771(B,H)
-52801(C,E,G)
-21825(G)
-21829(B,H)
-21902(A)
LDW390-21903(A,C)
LDW390-52609(A)
FOR CONTINUATION OF WIRING SEE SIDE VIEW "A"
GT11F-BR-08-12(2)
LDW390-21515(A)
-21852(A)
-21900(A)
-21902(A,C)
LDW390-21903(A,C)
LDW390-21941(D)
E369
LDW390-21901(H,F)
LDW390-21785(F)
FOR CONTINUATION OF WIRING SEE SIDE VIEW "A"
LDW390-51763(A,B)
-52768(E,C,F)
-52771(B)
-52811(A,B)
LDW390-52812(B)
LDW390-516(E)
788(E)
LDW390-901(E)
LDW390-788(C)
900(C)
901(C)
910(C)
355(A)
768(A,B)
767(B)
786(B)
788(A)
898(A)
900(A)
LDW390-901(A)
E1
E2
F1
F2
F3
F5
G2
G3
G6
H8
K1
L2
L3
M4

02/03

NAS 9-1100

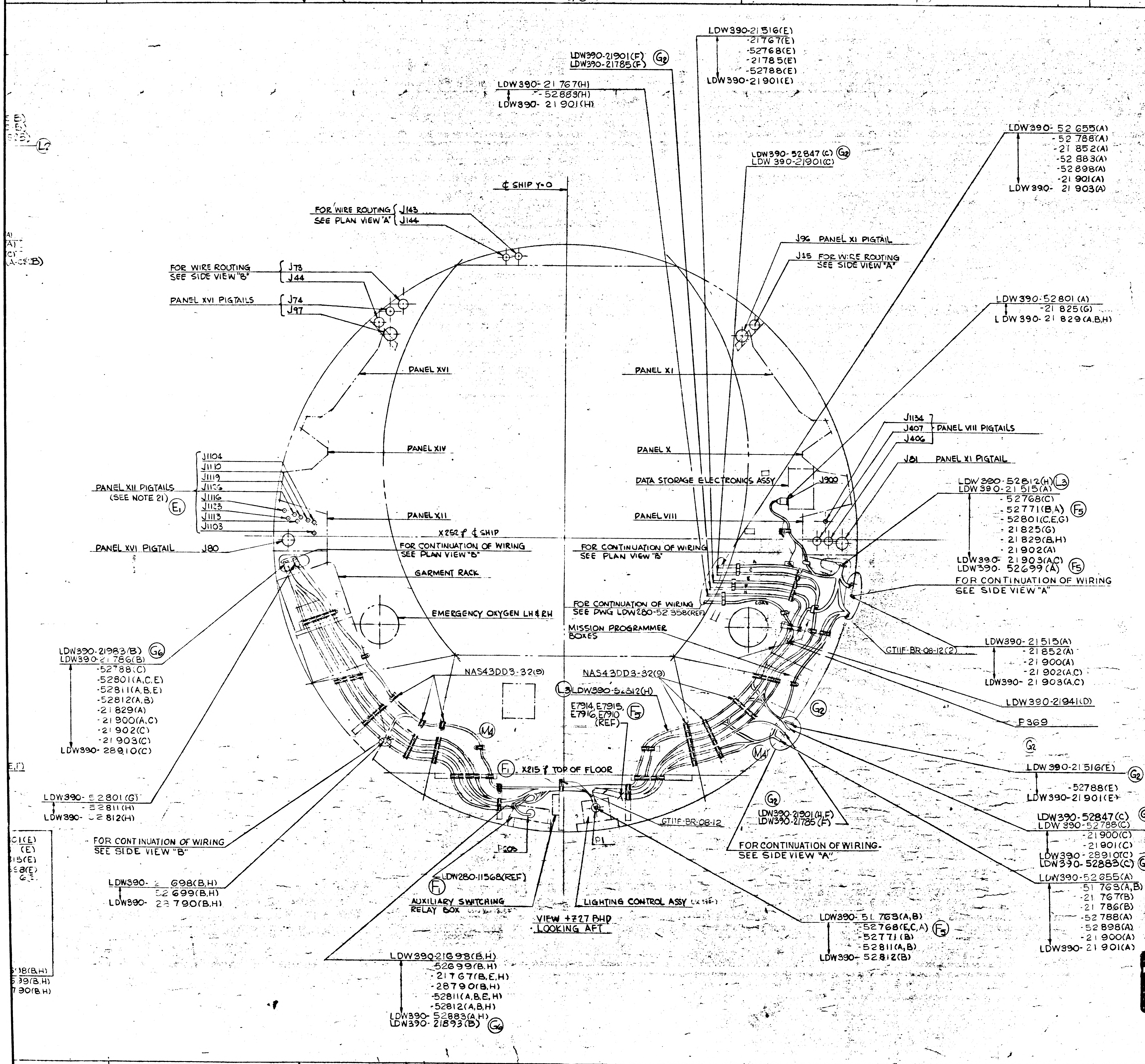
47
46
45
44
LDW390-21516(E)
-21767(E)
-52768(E)
-21785(E)
-52788(E)
LDW390-21901(E)
LDW390-21901(F) G2
LDW390-21785(F)
LDW390-21 767(H)
-52883(H)
LDW390- 21 901(H)
LDW390-52847 (C) G2
LDW 390-21901(C)
LDW390- 52 655(A)
-52 788(A)
-21 852(A)
-52 883(A)
-52 898(A)
-21 901(A)
LDW 390- 21 903(A)
℄ SHIP Y-0
FOR WIRE ROUTING SEE PLAN VIEW "A" J143 J144
FOR WIRE ROUTING SEE SIDE VIEW "B" J73 J44
PANEL XVI PIGTAILS J74 J97
J96 PANEL XI PIGTAIL
J15 FOR WIRE ROUTING SEE SIDE VIEW "A"
LDW390-52801 (A)
-21 825(G)
LDW390-21 829(A,B,H)
PANEL XVI
PANEL XI
PANEL XIV
PANEL X
J1134 J407 J406 PANEL VIII PIGTAILS
J81 PANEL XI PIGTAIL
DATA STORAGE ELECTRONICS ASSY
J900
PANEL XII PIGTAILS (SEE NOTE 21) E1
J1104 J1110 J1119 J1126 J1116 J1123 J1113 J1103
PANEL XII
PANEL VIII
X252 ℄ SHIP
PANEL XVI PIGTAIL J80
FOR CONTINUATION OF WIRING SEE PLAN VIEW "B"
FOR CONTINUATION OF WIRING SEE PLAN VIEW "B"
GARMENT RACK
LDW390-52812(H) L3
LDW390-21 515(A)
-52768(C)
-52771(B,A) F5
-52801(C,E,G)
-21825(G)
-21829(B,H)
-21902(A)
LDW390- 21903(A,C)
LDW390- 52699 (A) F5
FOR CONTINUATION OF WIRING SEE SIDE VIEW "A"
EMERGENCY OXYGEN LH & RH
FOR CONTINUATION OF WIRING SEE DWG LDW280-52358(REF)
MISSION PROGRAMMER BOXES
GT11F-BR-08-12(2)
LDW390-21515(A)
-21852(A)
-21900(A)
-21902(A,C)
LDW390- 21 903(A,C)
LDW390-21941(D)
P369
G2
LDW390-21983(B) G6
LDW390-21786(B)
-52788(C)
-52801(A,C,E)
-52811(A,B,E)
-52812(A,B)
-21829(A)
-21900(A,C)
-21902(C)
-21903(C)
LDW390- 28910(C)
NAS43DD3-32(9)
NAS43DD3-32(9)
L3 LDW390-52812(H)
E7914, E7915, E7916, E7910 (REF) F5
M4
M4
G2
F1 X215 ℄ TOP OF FLOOR
LDW390-21516(E) G2
-52788(E)
LDW390-21901(E)
LDW390-52801 (G)
-52811(H)
LDW390- 52812(H)
G2
LDW390-21901(H,F)
LDW390-21785(F)
GT11F-BR-08-12
LDW390-52847(C) G2
LDW 390-52788(C)
-21900(C)
-21901(C)
LDW390-28910(C)
LDW390-52883(C) G2
FOR CONTINUATION OF WIRING SEE SIDE VIEW "B"
P609
P1
FOR CONTINUATION OF WIRING SEE SIDE VIEW "A"
LDW390-52655(A)
-51 763(A,B)
-21 767(B)
-21 786(B)
-52788(A)
-52898(A)
-21900(A)
LDW390- 21 901(A)
LDW390- 2 698(B,H)
52 699(B,H)
LDW390- 28 790(B,H)
LDW280-11568(REF) F1
AUXILIARY SWITCHING RELAY BOX
LIGHTING CONTROL ASSY
VIEW +Z27 BHD LOOKING AFT
LDW390-51 763(A,B)
-52768(E,C,A) F5
-52771(B)
-52811(A,B)
LDW390- 52812(B)
LDW390-21698(B,H)
-52699(B,H)
-21767(B,E,H)
-28790(B,H)
-52811(A,B,E,H)
-52812(A,B,H)
LDW390- 52883(A,H)
LDW390- 21893(B) G6
C
B
A

MANUFACTURING OPERATIONS
UNLESS OTHERWISE SPECIFIED
NOTES CHECKED √ APPLY TO THIS DWG.

PART NUMBER AND ALL OTHER MARKINGS IN REGION MARKED ⊠ USE BOTH SIDES IF NECESSARY.	
FILLET AND INSIDE CORNER RADII TOLERANCES .016R TO .062R ± .010 .063R TO .250R ± .015 OVER .250R ± .030	
DEPTH SHOWN FOR TAPPED HOLES IS FULL THDS. 2-3 IMP THDS. BEYOND PERMISSIBLE.	
EXTERNAL THREAD LENGTH SHOWN INCLUDES 2 IMPERFECT THREADS MAX.	
DO NOT CADMIUM PLATE & PAINT HOLES OR SURFACES MARKED WITH DOUBLE ASTERISK.	
MISMATCH STEP OF ± .005 PERMISSIBLE DUE TO CHANGE OF CUTTERS AT INSIDE INTERSECTING SURFACES.	
DIAMETERS MARKED MUST BE CONCENTRIC WITHIN FULL INDICATOR READING	
HOLES MUST BE KEPT FREE OF CHROME PLATING SOLUTION.	
ALL DIMENSIONS SHOWN TO BE MET AFTER CADMIUM PLATING. THICKNESS OF PLATE .0003 MIN. TO .0005 MAX. MIN. THICKNESS TO BE .0002 ON THREADED AREAS. NO ALLOWANCE FOR PLATING IN HOLES	
125 ▽ SURFACE ROUGHNESS INCLUDING REAMED HOLES PER MIL-STD-10	
200 ▽ FOR ALL DRILLED HOLES	
REMOVE ALL BURRS. BREAK ALL EDGES .015-.031	
INSPECTION INFORMATION MINIMUM PERMISSIBLE AVERAGE EDGE DISTANCE MARKED IS	
SYMBOL √ DENOTES SURFACE TO BE MACHINED	
UNLESS OTHERWISE SPECIFIED TOLERANCE ON FLANGES IS ± 1/32	
LENGTHS OF AN, NAS & MS AL ALY RIVETS SHORTER THAN 1 INCH ARE NOT SPECIFIED.	
TOLERANCE ON LOFTED DELINEATIONS IS	

DWG SIZE 34 X 100

PRINTING INFO ONLY
FULL SIZE SHEET AREA (36 X 100)= 24.5 SQ. FT.
1/2 SIZE SHEET AREA (1/4 OF FULL)= 6.3 SQ. FT.

PRINT TRIM LINE

LDW 280-52357M

LDW 280-52357M

03/03

NAS 9-1100

LM	GRUMMAN AIRCRAFT ENGRG CORP., BETHPAGE, L. I., NEW YORK			
	SIZE J	CODE IDENT NO. 26512	LDW 280-52357	M
MODEL OR END ITEM	SCALE 1/5		SHEET 9.00	

THIS IS AN ORIGINAL DRAWING

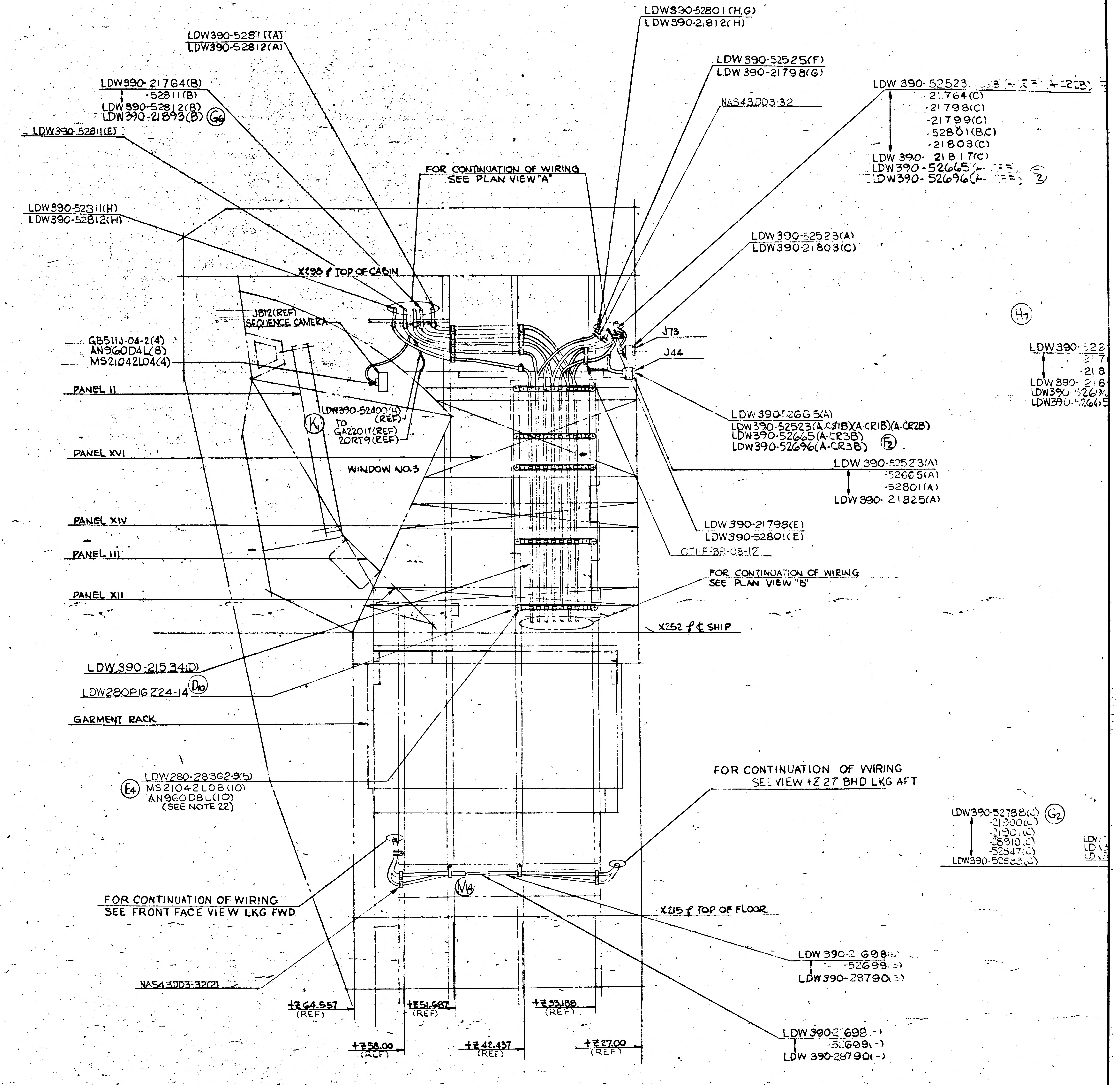
62
61
60
59
C
B
A
LDW390-52811(A)
LDW390-52812(A)
LDW390-21764(B)
-52811(B)
LDW390-52812(B)
LDW390-21893(B)
G6
LDW390-52811(E)
LDW390-52811(H)
LDW390-52812(H)
FOR CONTINUATION OF WIRING
SEE PLAN VIEW "A"
X298 ℄ TOP OF CABIN
J812(REF)
SEQUENCE CAMERA
GB511J-04-2(4)
AN960D4L(8)
MS21042L04(4)
PANEL II
LDW390-52400(H)
(REF)
TO
GA2201T(REF)
2ORT9(REF)
K1
PANEL XVI
WINDOW NO.3
PANEL XIV
PANEL III
PANEL XII
LDW390-21534(D)
LDW280P16224-14
D10
GARMENT RACK
LDW280-28362-9(5)
MS21042L08(10)
AN960D8L(10)
(SEE NOTE 22)
E4
FOR CONTINUATION OF WIRING
SEE FRONT FACE VIEW LKG FWD
NAS43DD3-32(2)
M4
+Z64.557
(REF)
+Z51.687
(REF)
+Z33.188
(REF)
+Z58.00
(REF)
+Z42.437
(REF)
+Z27.00
(REF)
LDW390-52801(H,G)
LDW390-21812(H)
LDW390-52525(F)
LDW390-21798(G)
NAS43DD3-32
LDW390-52523
-21764(C)
-21798(C)
-21799(C)
-52801(B,C)
-21803(C)
LDW390-21817(C)
LDW390-52665
LDW390-52696
F2
LDW390-52523(A)
LDW390-21803(C)
H7
J73
J44
LDW390-52665(A)
LDW390-52523(A-CS1B)(A-CR1B)(A-CR2B)
LDW390-52665(A-CR3B)
LDW390-52696(A-CR3B)
F2
LDW390-52523(A)
-52665(A)
-52801(A)
LDW390-21825(A)
LDW390-21798(E)
LDW390-52801(E)
GT11F-BR-08-12
FOR CONTINUATION OF WIRING
SEE PLAN VIEW "B"
X252 ℄ ℄ SHIP
FOR CONTINUATION OF WIRING
SEE VIEW +Z 27 BHD LKG AFT
X215 ℄ TOP OF FLOOR
LDW390-21698
-52699
LDW390-28790
LDW390-21698
-52699(-)
LDW390-28790(-)
LDW390-52788(C)
-21900(C)
-21901(C)
-28910(C)
-52847(C)
G2
LDW390-

SIDE VIEW "B"
LOOKING OUTB'D R.H. SIDE

K4

LDW280-52357-9(REF)

01/03

NAS 9-1100

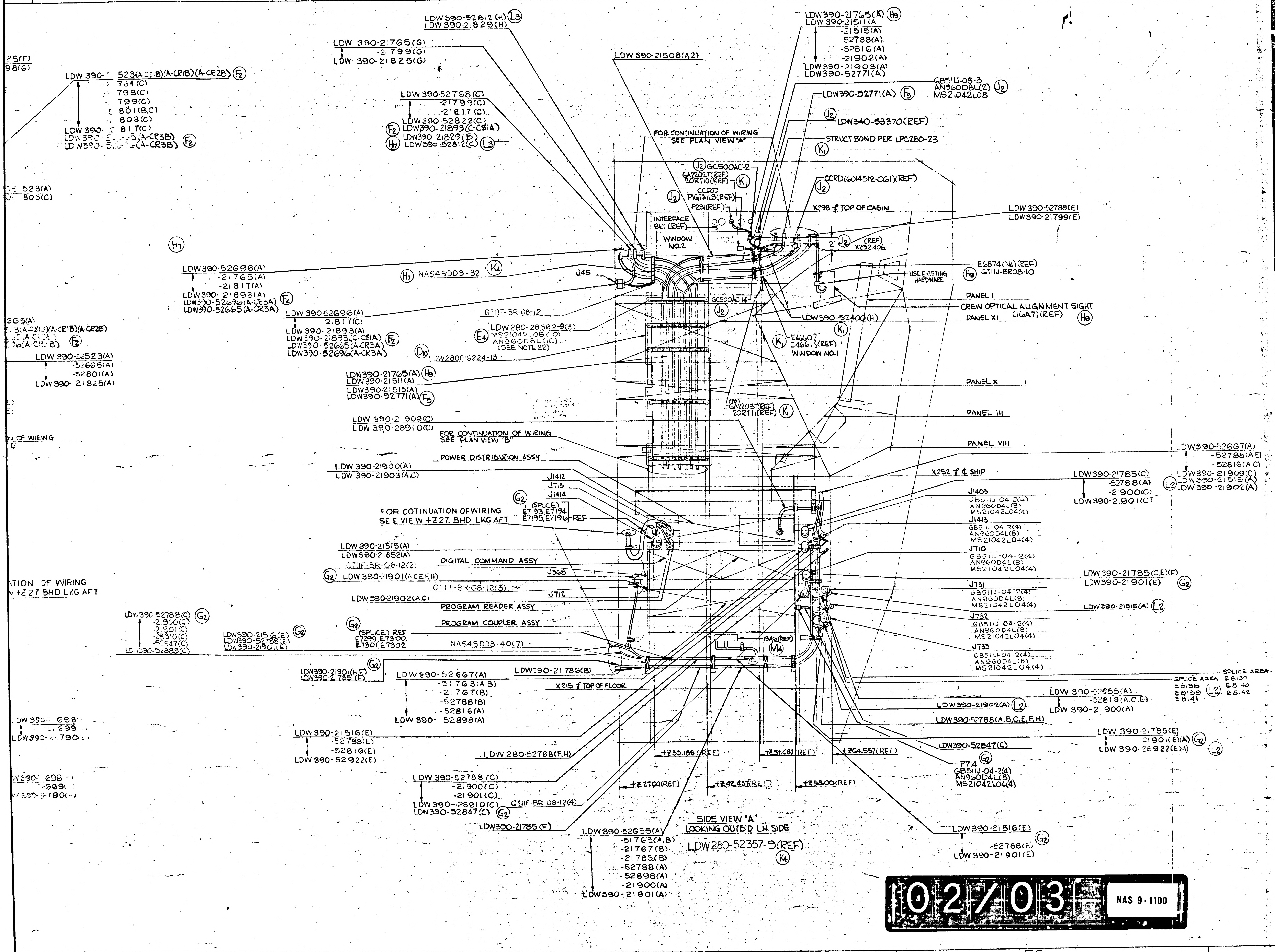
58
57
56
55
LDW390-52812(H) L3
LDW390-21829(H)
LDW 390-21765(G)
-21799(G)
LDW 390-21825(G)
LDW390-21508(A2)
LDW390-21765(A) H9
LDW390-21511(A)
-21515(A)
-52788(A)
-52816(A)
-21902(A)
LDW390-21903(A)
LDW390-52771(A)
GB51IJ-08-3
AN960DBL(2)
MS21042L08 J2
LDW390-52771(A) F5
LDW340-53370(REF)
STRUCT BOND PER LPC280-23 K1
LDW390-52768(C)
-21799(C)
-21817(C)
LDW390-52822(C)
F2 LDW390-21893(C-CS1A)
LDW390-21829(B)
H7 LDW390-52812(C) L3
FOR CONTINUATION OF WIRING
SEE PLAN VIEW "A"
J2 GC500AC-2
GA2202T(REF)
2ORT10(REF) K1
CCRD
PIGTAILS(REF)
P231(REF)
J2
CCRD(6014512-061)(REF)
X298 ℄ TOP OF CABIN
LDW390-52788(E)
LDW390-21799(E)
INTERFACE
BKT (REF)
WINDOW
NO.2
2" J2 (REF)
X292.406
E6874(N4)(REF)
H9 GT11J-BR08-10
USE EXISTING
HARDWARE
PANEL I
CREW OPTICAL ALIGNMENT SIGHT
(16A7)(REF) H9
PANEL XI
LDW390-523(A-CS1B)(A-CR1B)(A-CR2B) F2
-764(C)
-798(C)
-799(C)
-801(B,C)
-803(C)
LDW390-52817(C)
LDW390-5...(A-CR3B) F2
LDW390-5...(A-CR3B)
H7
LDW390-52696(A)
-21765(A)
-21817(A)
LDW390-21893(A)
LDW390-52696(A-CS3A) F2
LDW390-52665(A-CR3A)
H7 NAS43DD3-32 K4
J45
GC500AC-14
J2
LDW390-52400(H)
K1
K1 E4660
E4661(REF)
WINDOW NO.1
LDW390-52696(A)
21817(C)
LDW390-21893(A)
LDW390-21893(C-CS1A)
LDW390-52665(A-CR3A) F2
LDW390-52696(A-CR3A)
GT11F-BR-08-12
LDW280-28362-9(5)
MS21042L08(10)
AN960D8L(10)
(SEE NOTE 22)
E4
D10 LDW280P16224-13
LDW390-52523(A)
-52665(A)
-52801(A)
LDW390-21825(A)
LDW390-21765(A) H9
LDW390-21511(A)
LDW390-21515(A)
LDW390-52771(A) F5
PANEL X
(TO) GA2203T(REF)
2ORT11(REF) K1
PANEL III
LDW390-21909(C)
LDW390-28910(C)
FOR CONTINUATION OF WIRING
SEE PLAN VIEW "B"
PANEL VIII
POWER DISTRIBUTION ASSY
LDW390-52667(A)
-52788(A,E)
-52816(A,C)
LDW390-21909(C)
L2 LDW390-21515(A)
LDW390-21902(A)
LDW390-21900(A)
LDW390-21903(A,C)
X252 ℄ SHIP
LDW390-21785(C)
-52788(A)
-21900(C)
LDW390-21901(C)
J1412
J713
J1414
G2
(SPLICE)
E7193,E7194
E7195,E7196 REF
FOR COTINUATION OF WIRING
SEE VIEW +Z27 BHD LKG AFT
J1403
GB51IJ-04-2(4)
AN960D4L(8)
MS21042L04(4)
J1413
GB51IJ-04-2(4)
AN960D4L(8)
MS21042L04(4)
J710
GB51IJ-04-2(4)
AN960D4L(8)
MS21042L04(4)
LDW390-21515(A)
LDW390-21852(A)
GT11F-BR-08-12(2)
DIGITAL COMMAND ASSY
G2 LDW390-21901(A,C,E,F,H)
J568
GT11F-BR-08-12(3)
LDW390-21902(A,C)
J712
PROGRAM READER ASSY
LDW390-21785(C,E)(F)
LDW390-21901(E) G2
J731
GB51IJ-04-2(4)
AN960D4L(8)
MS21042L04(4)
LDW390-21515(A) L2
J732
GB51IJ-04-2(4)
AN960D4L(8)
MS21042L04(4)
J733
GB51IJ-04-2(4)
AN960D4L(8)
MS21042L04(4)
ATION OF WIRING
+Z27 BHD LKG AFT
LDW390-52788(C) G2
-21900(C)
-21901(C)
-28910(C)
-52847(C)
LDW390-52883(C)
LDW390-21516(E) G2
LDW390-52788(E)
LDW390-21901(E)
G2
(SPLICE) REF
E7299,E7300,
E7301,E7302
PROGRAM COUPLER ASSY
NAS43DD3-40(7)
16A6(REF) M4
LDW390-21901(H,F) G2
LDW390-21785(F)
LDW390-52667(A)
-51763(A,B)
-21767(B)
-52788(B)
-52816(A)
LDW390-52898(A)
LDW390-21786(B)
X215 ℄ TOP OF FLOOR
SPLICE AREA
SPLICE AREA E8137
E8138 E8140
E8139 L2 E8142
E8141
LDW390-52655(A)
-52816(A,C,E)
LDW390-21900(A)
LDW390-21902(A) L2
LDW390-52788(A,B,C,E,F,H)
LDW390-698
-699
LDW390-21790
LDW390-21516(E)
-52788(E)
-52816(E)
LDW390-52922(E)
LDW280-52788(F,H)
+Z35.188(REF)
+Z51.687(REF)
+Z64.557(REF)
LDW390-52847(C)
G2
P714
GB51IJ-04-2(4)
AN960D4L(8)
MS21042L04(4)
LDW390-21785(E)
-21901(E)(A) G2
LDW390-28922(E)(A) L2
LDW390-698
-699
LDW390-21790
LDW390-52788(C)
-21900(C)
-21901(C)
LDW390-28910(C)
LDW390-52847(C) G2
GT11F-BR-08-12(4)
+Z27.00(REF)
+Z42.437(REF)
+Z58.00(REF)
LDW390-21785(F)
LDW390-52655(A)
-51763(A,B)
-21767(B)
-21786(B)
-52788(A)
-52898(A)
-21900(A)
LDW390-21901(A)
LDW390-21516(E) G2
-52788(E)
LDW390-21901(E)

SIDE VIEW "A"
LOOKING OUTB'D LH SIDE

LDW280-52357-9(REF) K4

02/031

NAS 9-1100

MANUFACTU
UNLESS OT
NOTES CHECKED

P
AND ALL OTHER
IN REGION MARK
USE BOTH SIDES

FILLET AND INSI
RADII TOLERANC
.016R TO .062R
.063R TO .250R
OVER .250R

DEPTH SHOWN F
HOLES IS FULL
BEYOND PERMISS

EXTERNAL THREA
SHOWN INCLUDE
2 IMPERFECT TH

DO NOT CADMIU
HOLES OR SURFA
WITH DOUBLE A

MISMATCH STEP
PERMISSIBLE DU
OF CUTTERS AT
INTERSECTING S

DIAMETERS MAR
MUST BE CONCE

READING

HOLES MUST BE
CHROME PLATIN

ALL DIMENSION
AFTER CADMIUM
THICKNESS OF
TO .0005 MAX.
BE .0002 ON TH
NO ALLOWANCE
HOLES

125 SURFAC
INCLUD
PER MIL

200 FOR AL

REMOVE ALL BU
BREAK ALL EDG

INSPECTION IN
MINIMUM PERM
AVERAGE EDGE
MARKED

SYMBOL DE
TO BE MACHIN

UNLESS OTHER
TOLERANCE ON

LENGTHS OF A
RIVETS SHORTE
NOT SPECIFIED

TOLERANCE ON
DELINEATIONS

LM	GRUMMAN AIRCRAFT ENGRG CORP., B
SIZE J	CODE IDENT NO. 26512 LDW 2
MODEL OR END ITEM	SCALE 1/3

THIS IS AN ORIGINAL D

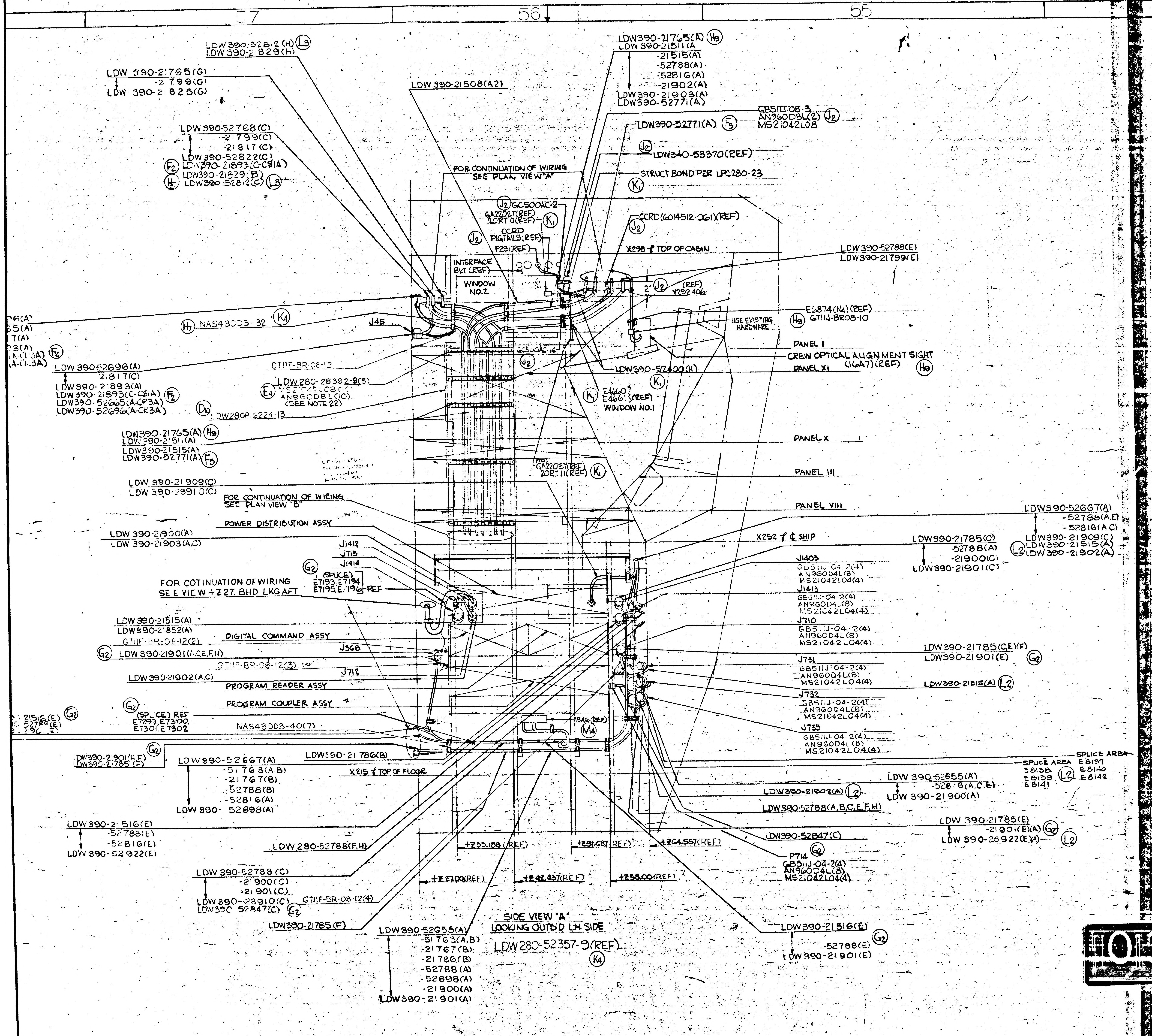
57
56
55
54
LDW390-52812(H) (L3)
LDW390-21829(H)
LDW 390-21765(G)
-21799(G)
LDW 390-21825(G)
LDW390-52768(C)
-21799(C)
-21817(C)
LDW390-52822(C)
(F2) LDW390-21893(C-C8IA)
LDW390-21829(B)
(H) LDW390-52812(C) (L3)
LDW 390-21508(A2)
LDW390-21765(A) (H9)
LDW 390-21511(A)
-21515(A)
-52788(A)
-52816(A)
-21902(A)
LDW390-21903(A)
LDW390-52771(A)
GB511J-08-3
AN960D8L(2) (J2)
MS21042L08
LDW390-52771(A) (F5)
(J2) LDW340-53370(REF)
STRUCT BOND PER LPC280-23
(K1)
FOR CONTINUATION OF WIRING SEE PLAN VIEW "A"
(J2) GC500AC-2
GA2202T(REF)
2ORT10(REF) (K1)
(J2) CCRD PIGTAILS(REF)
P231(REF)
CCRD(6014512-061)(REF)
(J2)
X298 ℄ TOP OF CABIN
LDW390-52788(E)
LDW390-21799(E)
INTERFACE BKT (REF)
WINDOW NO.2
2" (J2) (REF) X292.406
E6874(N4)(REF)
(H9) GT11J-BR08-10
USE EXISTING HARDWARE
PANEL I
CREW OPTICAL ALIGNMENT SIGHT (16A7)(REF) (H9)
PANEL XI
LDW390-52400(H)
(K1)
GC500AC-14
(J2)
(K1) E4660 E4661 (REF)
WINDOW NO.1
PANEL X
(TO) GA2203T(REF) 2ORT11(REF) (K1)
PANEL III
PANEL VIII
(H7) NAS43DD3-32 (K4)
J45
(F2)
LDW39052696(A)
21817(C)
LDW390-21893(A)
LDW390-21893(C-C8IA) (F2)
LDW390-52665(A-CP3A)
LDW390-52696(A-CK3A)
GT11F-BR-08-12
LDW280-28362-9(5)
(E4) MS21042L08(10)
AN960D8L(10)
(SEE NOTE 22)
(D10) LDW280P16224-13
LDW390-21765(A) (H9)
LDW390-21511(A)
LDW390-21515(A)
LDW390-52771(A) (F5)
LDW 390-21909(C)
LDW 390-28910(C)
FOR CONTINUATION OF WIRING SEE PLAN VIEW "B"
POWER DISTRIBUTION ASSY
LDW 390-21900(A)
LDW 390-21903(A,C)
J1412
J713
J1414
(G2) (SPLICE) E7193, E7194 E7195, E7196 REF
FOR COTINUATION OF WIRING SEE VIEW +Z27. BHD LKG AFT
LDW390-21515(A)
LDW390-21852(A)
GT11F-BR-08-12(2)
DIGITAL COMMAND ASSY
J568
(G2) LDW 390-21901(A,C,E,F,H)
GT11F-BR-08-12(3)
J712
LDW390-21902(A,C)
PROGRAM READER ASSY
PROGRAM COUPLER ASSY
(G2) (SPLICE) REF E7299, E7300, E7301, E7302
NAS43DD3-40(7)
19A6(REF) (M4)
-21516(E) (G2)
-52788(E)
LDW390-21901(H,F)
LDW390-21785(F)
(G2)
LDW 390-52667(A)
-51763(A,B)
-21767(B)
-52788(B)
-52816(A)
LDW 390- 52898(A)
LDW390-21786(B)
X215 ℄ TOP OF FLOOR
X252 ℄ ℄ SHIP
J1403
GB511J-04-2(4)
AN960D4L(8)
MS21042L04(4)
J1413
GB511J-04-2(4)
AN960D4L(8)
MS21042L04(4)
J710
GB511J-04-2(4)
AN960D4L(8)
MS21042L04(4)
J731
GB511J-04-2(4)
AN960D4L(8)
MS21042L04(4)
J732
GB511J-04-2(4)
AN960D4L(8)
MS21042L04(4)
J733
GB511J-04-2(4)
AN960D4L(8)
MS21042L04(4)
LDW390-52667(A)
-52788(A,E)
-52816(A,C)
LDW390-21909(C)
(L2) LDW390-21515(A)
LDW 390-21902(A)
LDW390-21785(C)
-52788(A)
-21900(C)
LDW390-21901(C)
LDW 390-21785(C,E)(F)
LDW390-21901(E) (G2)
LDW390-21515(A) (L2)
SPLICE AREA E8137 E8140 E8142
SPLICE AREA E8138 E8139 E8141 (L2)
LDW 390-52655(A)
-52816(A,C,E)
LDW 390-21900(A)
LDW390-21902(A) (L2)
LDW390-52788(A,B,C,E,F,H)
LDW 390-21785(E)
-21901(E)(A) (G2)
LDW 390-28922(E)(A) (L2)
LDW390-52847(C)
(G2) P714
GB511J-04-2(4)
AN960D4L(8)
MS21042L04(4)
LDW 390-21516(E)
-52788(E)
-52816(E)
LDW 390-52922(E)
LDW 280-52788(F,H)
+Z35.188(REF)
+Z51.687(REF)
+Z64.557(REF)
+Z27.00(REF)
+Z42.437(REF)
+Z58.00(REF)
LDW 390-52788(C)
-21900(C)
-21901(C)
LDW 390-28910(C)
LDW390 52847(C) (G2)
GT11F-BR-08-12(4)
LDW390-21785(F)
LDW390-52655(A)
-51763(A,B)
-21767(B)
-21786(B)
-52788(A)
-52898(A)
-21900(A)
LDW390-21901(A)
LDW390-21516(E) (G2)
-52788(E)
LDW390-21901(E)
LDW280-52357-9(REF) (K4)

SIDE VIEW "A"
LOOKING OUTB'D LH SIDE

MANUFACTURING OPERATIONS

UNLESS OTHERWISE SPECIFIED
NOTES CHECKED √ APPLY TO THIS DWG.

- PART NUMBER AND ALL OTHER MARKINGS IN REGION MARKED ⊠ USE BOTH SIDES IF NECESSARY.
- FILLET AND INSIDE CORNER RADII TOLERANCES
  - .016R TO .062R ± .010
  - .063R TO .250R ± .015
  - OVER .250R ± .030
- DEPTH SHOWN FOR TAPPED HOLES IS FULL THDS. 2-3 IMP THDS. BEYOND PERMISSIBLE.
- EXTERNAL THREAD LENGTH SHOWN INCLUDES 2 IMPERFECT THREADS MAX.
- DO NOT CADMIUM PLATE & PAINT HOLES OR SURFACES MARKED WITH DOUBLE ASTERISK.
- MISMATCH STEP OF ± .005 PERMISSIBLE DUE TO CHANGE OF CUTTERS AT INSIDE INTERSECTING SURFACES.
- DIAMETERS MARKED MUST BE CONCENTRIC WITHIN FULL INDICATOR READING
- HOLES MUST BE KEPT FREE OF CHROME PLATING SOLUTION.
- ALL DIMENSIONS SHOWN TO BE MET AFTER CADMIUM PLATING. THICKNESS OF PLATE .0003 MIN. TO .0005 MAX. MIN. THICKNESS TO BE .0002 ON THREADED AREAS. NO ALLOWANCE FOR PLATING IN HOLES
- 125 √ SURFACE ROUGHNESS INCLUDING REAMED HOLES PER MIL-STD-10
- 200 √ FOR ALL DRILLED HOLES
- REMOVE ALL BURRS. BREAK ALL EDGES .015-.031
- INSPECTION INFORMATION MINIMUM PERMISSIBLE AVERAGE EDGE DISTANCE MARKED IS
- SYMBOL ƒ DENOTES SURFACE TO BE MACHINED
- UNLESS OTHERWISE SPECIFIED TOLERANCE ON FLANGES IS ± 1/32
- LENGTHS OF AN, NAS & MS AL ALY RIVETS SHORTER THAN 1 INCH ARE NOT SPECIFIED.
- TOLERANCE ON LOFTED DELINEATIONS IS

DWG SIZE 34 X 96
PRINTING INFO ONLY
FULL SIZE SHEET AREA (36 X) = 27.0 SQ. FT.
1/2 SIZE SHEET AREA (1/4 OF FULL) = SQ. FT.
PRINT TRIM LINE

C
B
A

LDW 280-52357-1

LDW 280-52357 M A

03/03

NAS 9-1100

LM	GRUMMAN AIRCRAFT ENGRG CORP., BETHPAGE, L. I., NEW YORK			
	SIZE J	CODE IDENT NO. 26512	LDW 280-52357	M
MODEL OR END ITEM	SCALE 1/5		SHEET 1002	

THIS IS AN ORIGINAL DRAWING

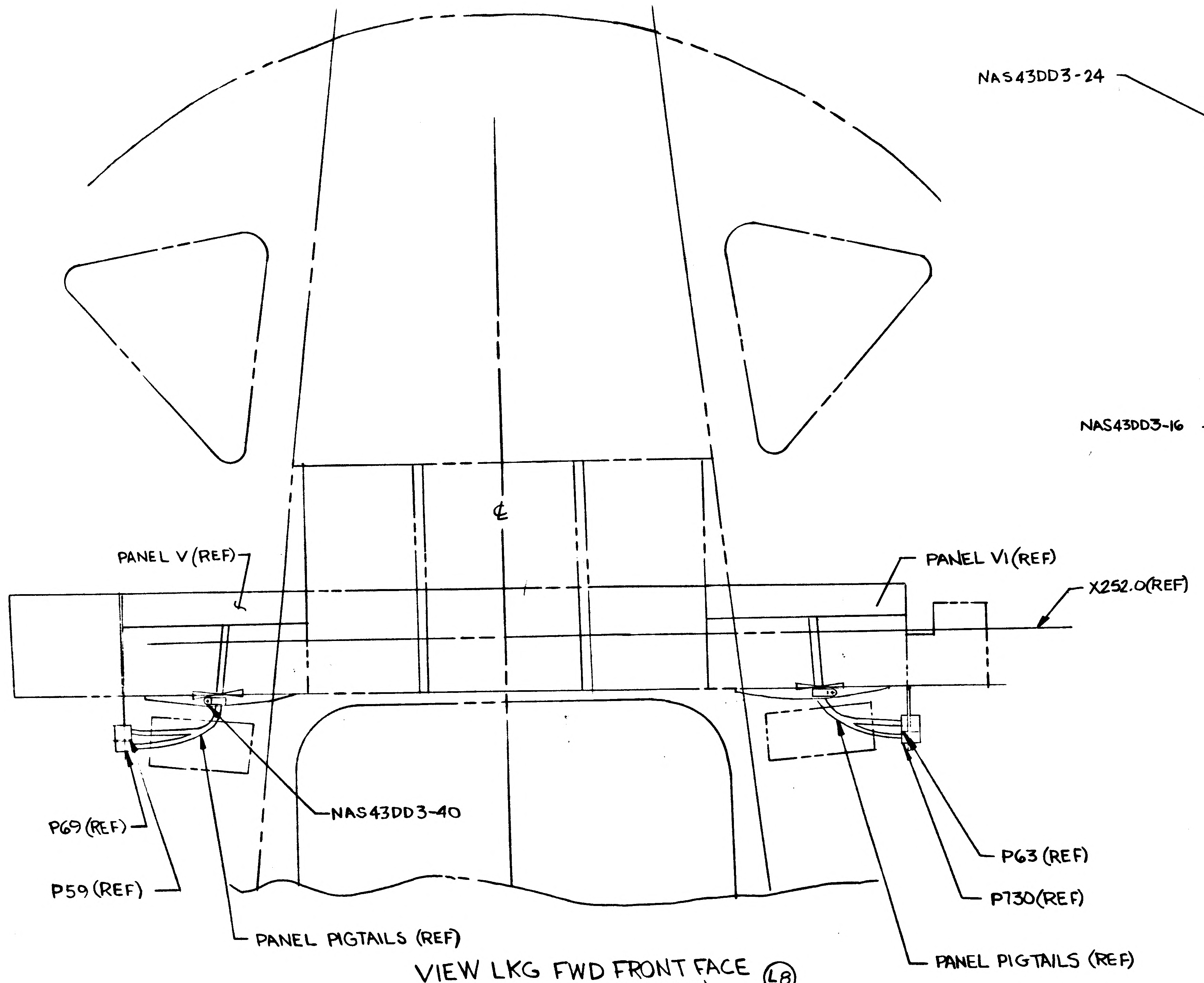
PANEL V (REF)
PANEL VI (REF)
X252.0 (REF)
℄
NAS43DD3-40
P69 (REF)
P59 (REF)
PANEL PIGTAILS (REF)
P63 (REF)
P730 (REF)
PANEL PIGTAILS (REF)

VIEW LKG FWD FRONT FACE (L8)
(PANEL PIGTAIL CLAMPING)

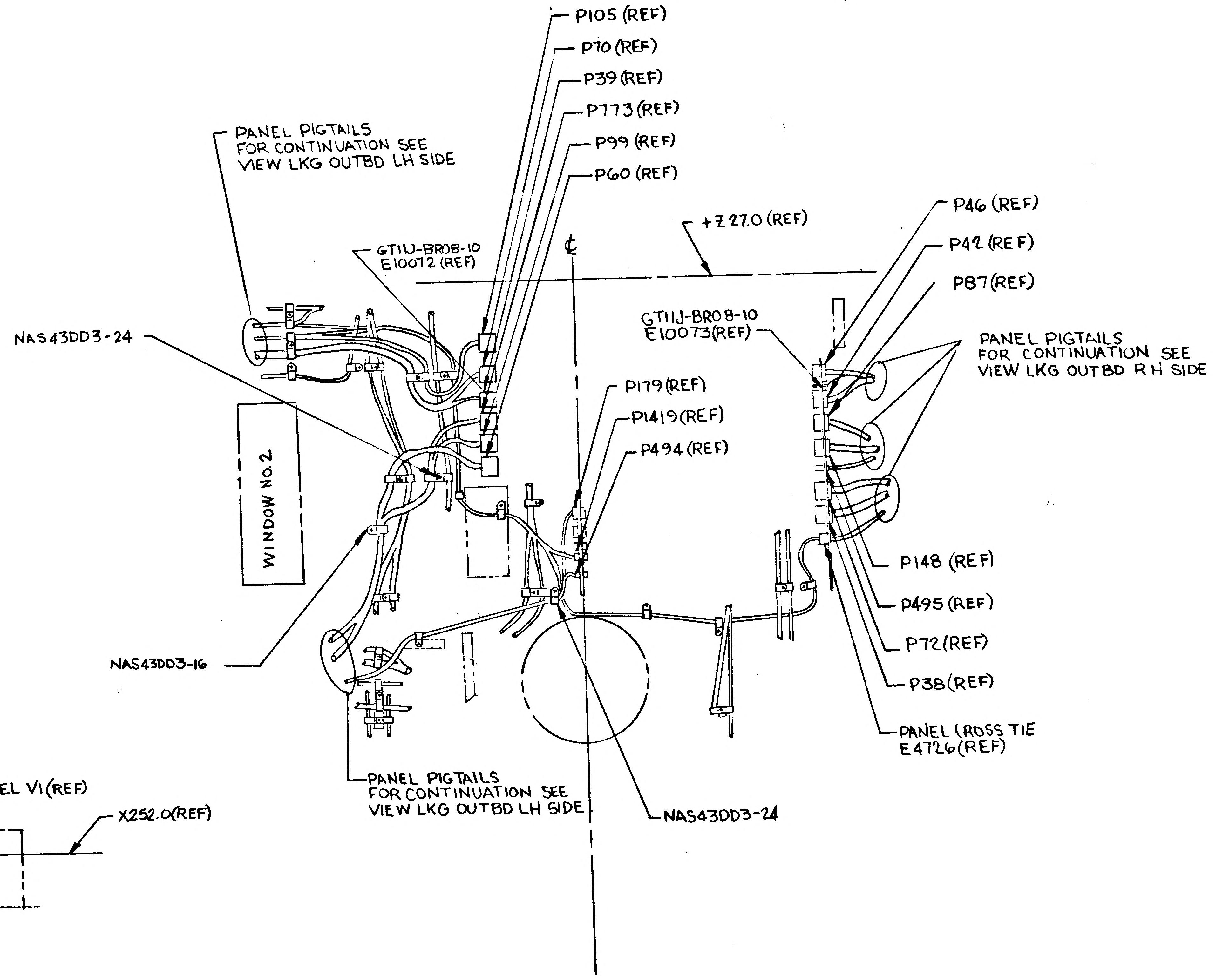
P105 (REF)
P70 (REF)
P39 (REF)
P773 (REF)
P99 (REF)
P60 (REF)
PANEL PIGTAILS FOR CONTINUATION SEE VIEW LKG OUTBD LH SIDE
+Z 27.0 (REF)
GTIIJ-BR08-10 E10072 (REF)
℄
NAS43DD3-24
WINDOW NO. 2
P179 (REF)
P1419 (REF)
P494 (REF)
GTIIJ-BR08-10 E10073 (REF)
P46 (REF)
P42 (REF)
P87 (REF)
PANEL PIGTAILS FOR CONTINUATION SEE VIEW LKG OUTBD RH SIDE
NAS43DD3-16
P148 (REF)
P495 (REF)
P72 (REF)
P38 (REF)
PANEL CROSS TIE E4726 (REF)
PANEL PIGTAILS FOR CONTINUATION SEE VIEW LKG OUTBD LH SIDE
NAS43DD3-24

VIEW LKG UP CABIN OVERHEAD (L8)
(PANEL PIGTAIL CLAMPING)

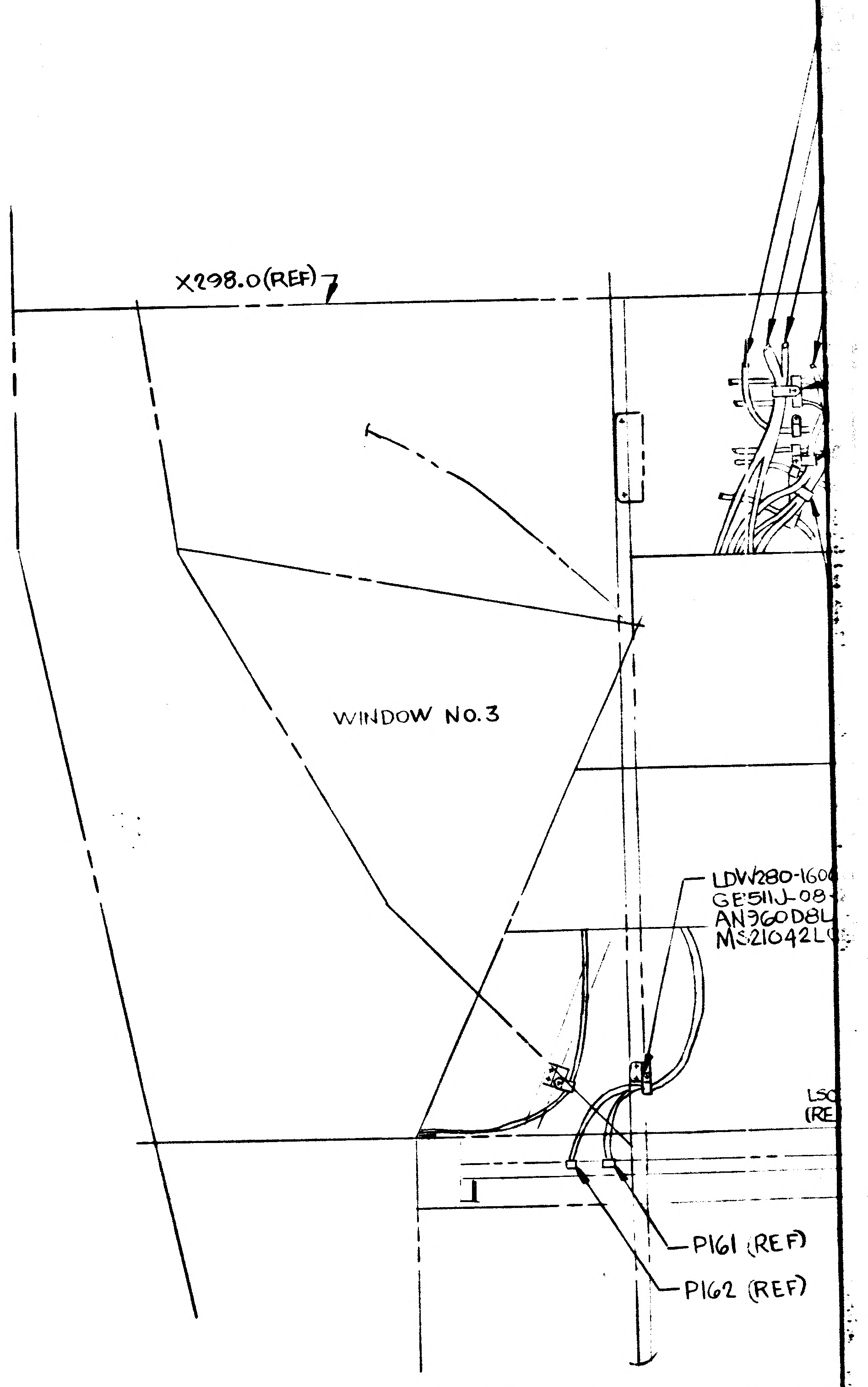
X298.0 (REF)
WINDOW NO. 3
LDW280-160
GE511J-08-
AN960D8L
MS21042L
LS
(RE
P161 (REF)
P162 (REF)

(L6) (L8) VIEW LKG OUTBD RH
(PANEL PIGTAIL CLAMP

01/02 NAS 9-1100

ON SEE
R H SIDE

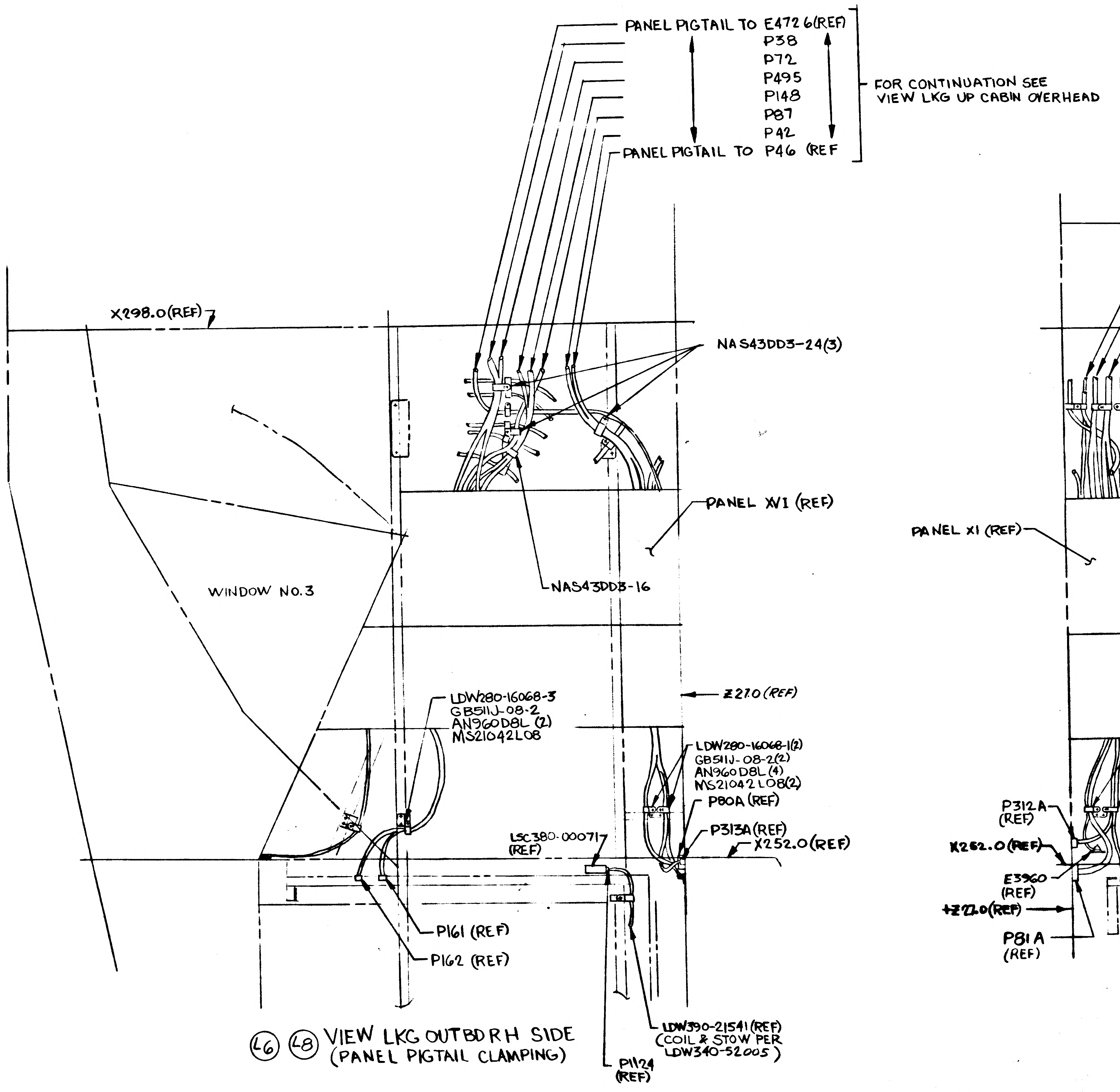
PANEL PIGTAIL TO E4726(REF)
P38
P72
P495
P148
P87
P42
PANEL PIGTAIL TO P46 (REF
FOR CONTINUATION SEE
VIEW LKG UP CABIN OVERHEAD
X298.0(REF)
NAS43DD3-24(3)
PANEL XV1 (REF)
WINDOW NO.3
NAS43DD3-16
Z270 (REF)
LDW280-16068-3
GB511J-08-2
AN960D8L (2)
MS21042L08
LDW280-16068-1(2)
GB511J-08-2(2)
AN960D8L (4)
MS21042L08(2)
P80A (REF)
P313A (REF)
X252.0 (REF)
LSC380-00071
(REF)
P161 (REF)
P162 (REF)
LDW390-21541 (REF)
(COIL & STOW PER
LDW340-52005)
P1124
(REF)

Ⓛ6 Ⓛ8 VIEW LKG OUTBD RH SIDE
(PANEL PIGTAIL CLAMPING)

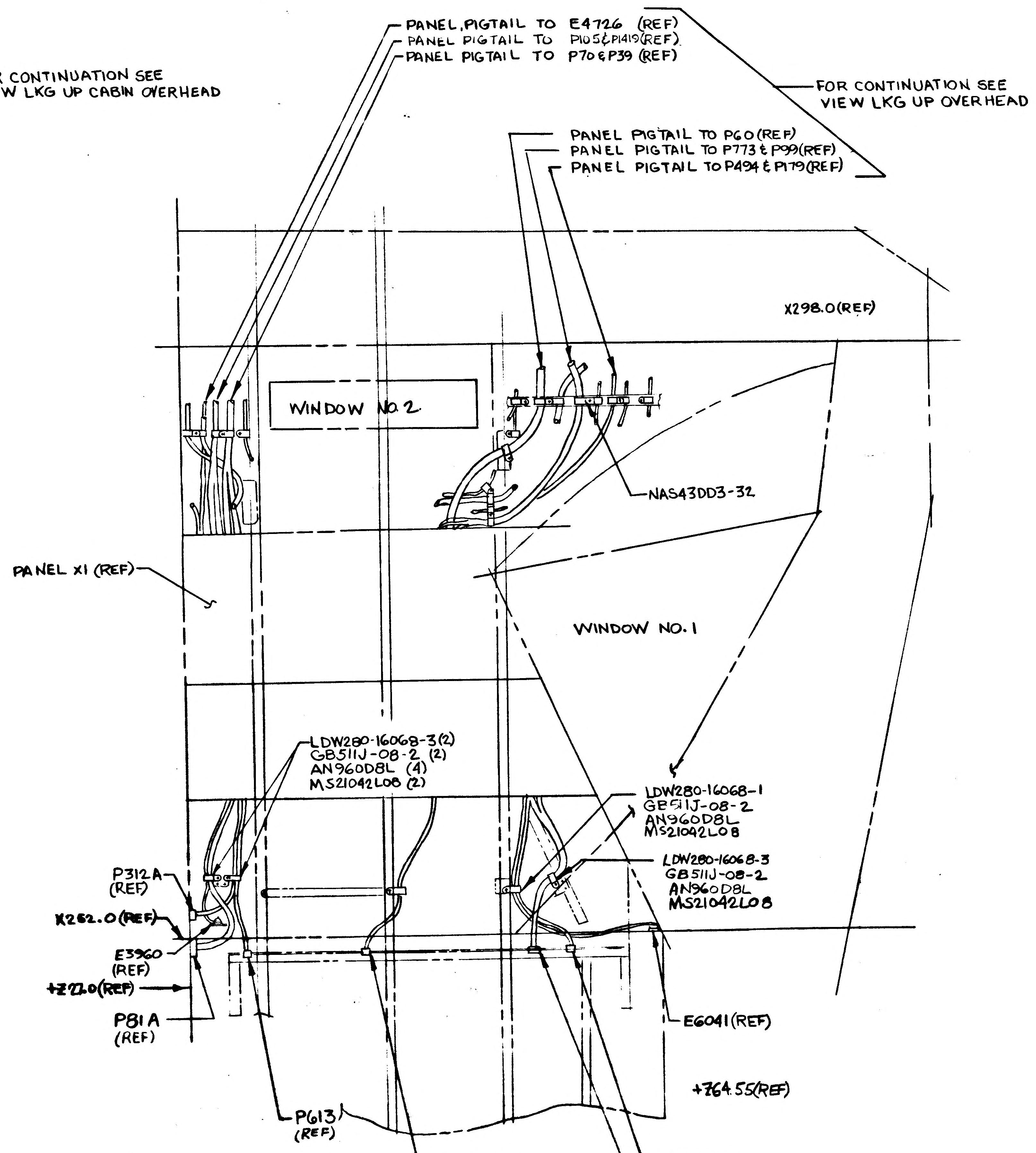
PANEL, PIGTAIL TO E4726 (REF)
PANEL PIGTAIL TO P105 & P1419 (REF)
PANEL PIGTAIL TO P70 & P39 (REF)
FOR CONTINUATION SEE
VIEW LKG UP OVERHEAD
PANEL PIGTAIL TO P60 (REF)
PANEL PIGTAIL TO P773 & P99 (REF)
PANEL PIGTAIL TO P494 & P179 (REF)
X298.0(REF)
WINDOW NO 2
NAS43DD3-32
PANEL X1 (REF)
WINDOW NO. 1
LDW280-16068-3(2)
GB511J-08-2 (2)
AN960D8L (4)
MS21042L08 (2)
LDW280-16068-1
GB511J-08-2
AN960D8L
MS21042L08
LDW280-16068-3
GB511J-08-2
AN960D8L
MS21042L08
P312A
(REF)
X252.0 (REF)
E3960
(REF)
+Z220 (REF)
P81A
(REF)
E6041 (REF)
+Z64.55 (REF)
P613
(REF)
P152 (REF)
P175 (REF)
P151 (REF)

Ⓛ6 Ⓛ8 VIEW LKG OUTBD L H SIDE
(PANEL PIGTAIL CLAMPING)

02/02 NAS 9-1100

MANUFACTURING OPERATIONS
UNLESS OTHERWISE SPECIFIED
NOTES CHECKED √ APPLY TO THIS DWG.

PART NUMBER AND ALL OTHER MARKINGS IN REGION MARKED ☒ USE BOTH SIDES IF NECESSARY.

FILLET AND INSIDE CORNER RADII TOLERANCES
.016R TO .062R ± .010
.063R TO .250R ± .015
OVER .250R ± .030

DEPTH SHOWN FOR TAPPED HOLES IS FULL THDS. 2-3 IMP THDS. BEYOND PERMISSIBLE.

EXTERNAL THREAD LENGTH SHOWN INCLUDES 2 IMPERFECT THREADS MAX.

DO NOT CADMIUM PLATE & PAINT HOLES OR SURFACES MARKED WITH DOUBLE ASTERISK.

MISMATCH STEP OF ± .005 PERMISSIBLE DUE TO CHANGE OF CUTTERS AT INSIDE INTERSECTING SURFACES.

DIAMETERS MARKED MUST BE CONCENTRIC WITHIN FULL INDICATOR READING

HOLES MUST BE KEPT FREE OF CHROME PLATING SOLUTION.

ALL DIMENSIONS SHOWN TO BE MET AFTER CADMIUM PLATING. THICKNESS OF PLATE .0003 MIN. TO .0005 MAX. MIN. THICKNESS TO BE .0002 ON THREADED AREAS. NO ALLOWANCE FOR PLATING IN HOLES

125 √ SURFACE ROUGHNESS INCLUDING REAMED HOLES PER MIL-STD-10

200 √ FOR ALL DRILLED HOLES

REMOVE ALL BURRS. BREAK ALL EDGES .015-.031

INSPECTION INFORMATION MINIMUM PERMISSIBLE AVERAGE EDGE DISTANCE MARKED IS

SYMBOL √ DENOTES SURFACE TO BE MACHINED

UNLESS OTHERWISE SPECIFIED TOLERANCE ON FLANGES IS ± 1/32

LENGTHS OF AN, NAS & MS AL ALY RIVETS SHORTER THAN 1 INCH ARE NOT SPECIFIED.

TOLERANCE ON LOFTED DELINEATIONS IS

DWG SIZE 34 X 80
PRINTING INFO ONLY
FULL SIZE SHEET AREA (36 X 90) — 22.5 SQ. FT.
1/2 SIZE SHEET AREA (1/4 OF FULL) — 5.6 SQ. FT.

PRINT TRIM LINE

C

B

A

LDW280-52357 M

LDW280-52357 M

	GRUMMAN AIRCRAFT ENGRG CORP., BETHPAGE, L. I., NEW YORK			
	SIZE K	CODE IDENT NO. 26512	LDW280-52357	M
MODEL OR END ITEM	SCALE		SHEET SH 13	

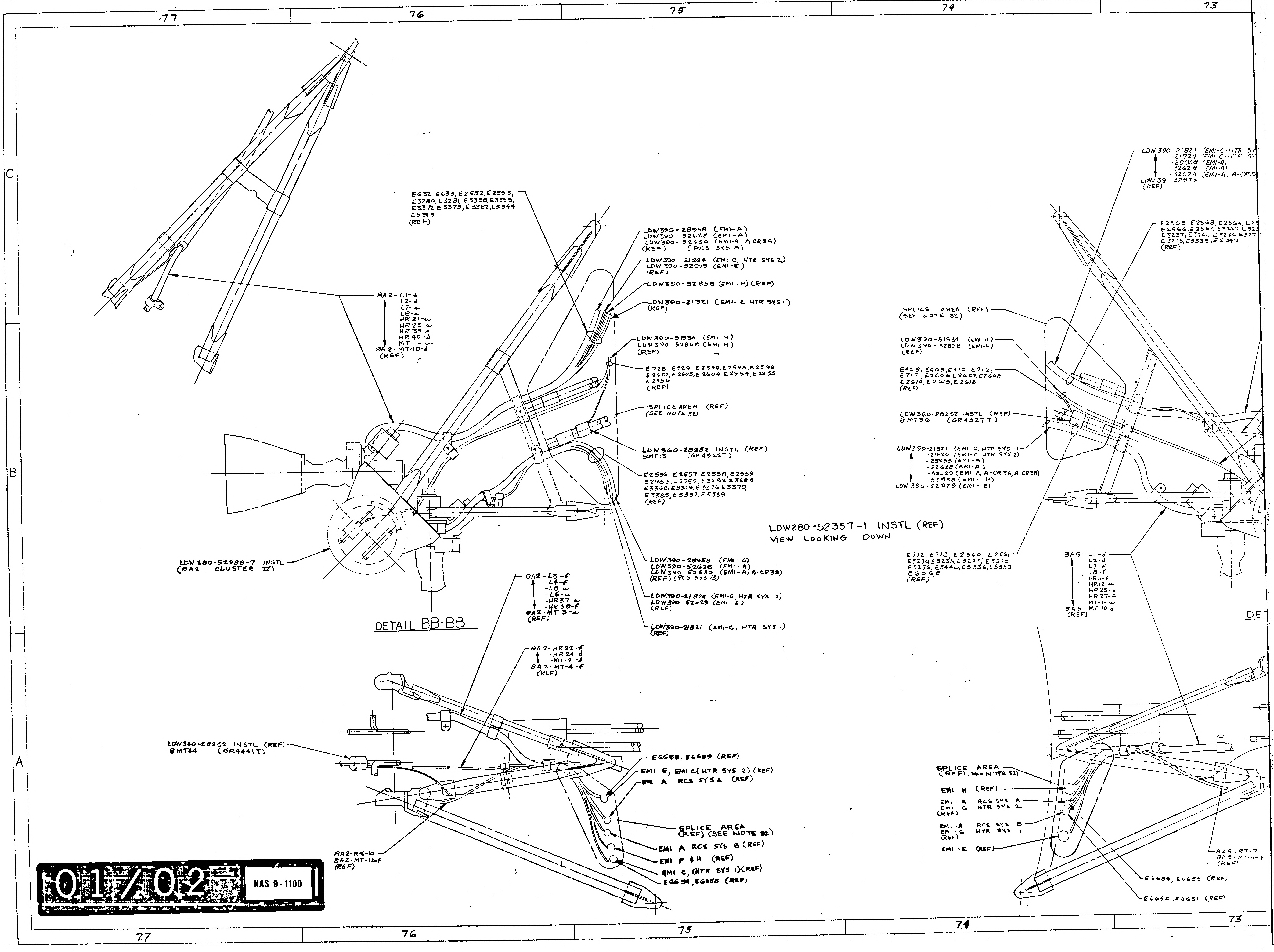
77
76
75
74
73
C
B
A
E632 E633, E2552, E2553,
E3280, E3281, E3358, E3359,
E3372 E3375, E3382, E5344
E5345
(REF)
LDW390-28958 (EMI-A)
LDW390-52628 (EMI-A)
LDW390-52630 (EMI-A A CR3A)
(REF) (RCS SYS A)
LDW390 21924 (EMI-C, HTR SYS 2)
LDW 390-52979 (EMI.-E)
(REF)
LDW390-52858 (EMI-H) (REF)
LDW390-21321 (EMI-C HTR SYS 1)
(REF)
8A2-L1-d
L2-d
L7-a
L8-a
HR21-u
HR23-a
HR39-a
HR40-d
MT-1-u
8A2-MT-10-d
(REF)
LDW390-51934 (EMI H)
LDW390 52858 (EMI H)
(REF)
E728, E729, E2594, E2595, E2596
E2602, E2603, E2604, E2954, E2955
E2956
(REF)
SPLICE AREA (REF)
(SEE NOTE 32)
LDW360-28252 INSTL (REF)
8MT13 (GR4322T)
E2556, E2557, E2558, E2559
E2958, E2959, E3282, E3283
E3368, E3369, E3376, E3379,
E3385, E5337, E5338
(REF)
LDW 280-52988-7 INSTL
(8A2 CLUSTER IV)
LDW390-28958 (EMI-A)
LDW390-52628 (EMI-A)
LDW390-52630 (EMI-A, A-CR3B)
(REF) (RCS SYS B)
LDW390-21824 (EMI-C, HTR SYS 2)
LDW390 52929 (EMI-E)
(REF)
LDW390-21821 (EMI-C, HTR SYS 1)
(REF)
8A2-L3-f
-L4-f
-L5-u
-L6-u
-HR37-u
-HR38-f
8A2-MT 3-a
(REF)
DETAIL BB-BB
8A2-HR22-f
-HR24-d
-MT-2-d
8A2-MT-4-f
(REF)
LDW360-28252 INSTL (REF)
8MT44 (GR4441T)
E6688, E6689 (REF)
EMI E, EMI C (HTR SYS 2) (REF)
EMI A RCS SYS A (REF)
SPLICE AREA
(REF) (SEE NOTE 32)
EMI A RCS SYS B (REF)
EMI F & H (REF)
EMI C, (HTR SYS 1) (REF)
E6654, E6655 (REF)
8A2-RS-10
8A2-MT-12-f
(REF)
LDW280-52357-1 INSTL (REF)
VIEW LOOKING DOWN
LDW 390-21821 (EMI-C-HTR SY
-21824 (EMI-C-HTR SY
-28958 (EMI-A)
-52628 (EMI-A)
-52626 (EMI-A, A-CR3
LDW 39 52979
(REF)
E2568 E2563, E2564, E2
E2566 E2567, E3229, E323
E3237, E3241, E3266, E327
E3275, E5335, E5349
(REF)
SPLICE AREA (REF)
(SEE NOTE 32)
LDW390-51934 (EMI-H)
LDW390-52858 (EMI-H)
(REF)
E408, E409, E410, E716,
E717, E2606, E2607, E2608
E2614, E2615, E2616
(REF)
LDW360-28252 INSTL (REF)
8MT36 (GR4327T)
LDW390-21821 (EMI-C, HTR SYS 1)
-21820 (EMI-C HTR SYS 2)
-28958 (EMI-A)
-52628 (EMI-A)
-52629 (EMI-A, A-CR3A, A-CR3B)
-52858 (EMI-H)
LDW 390-52979 (EMI-E)
E712, E713, E2560, E2561
E3230, E3235, E3240, E3270
E3276, E3440, E5336, E5350
E6068
(REF)
8A5-L1-d
L2-d
L7-f
L8-f
HR11-f
HR12-u
HR25-d
HR27-f
MT-1-u
8A5 MT-10-d
(REF)
DET
SPLICE AREA
(REF) SEE NOTE 32)
EMI H (REF)
EMI-A RCS SYS A
EMI C HTR SYS 2
(REF)
EMI-A RCS SYS B
EMI-C HTR SYS 1
(REF)
EMI-E (REF)
8A5-RT-7
8A5-MT-11-f
(REF)
E6684, E6685 (REF)
E6650, E6651 (REF)

01/02

NAS 9-1100

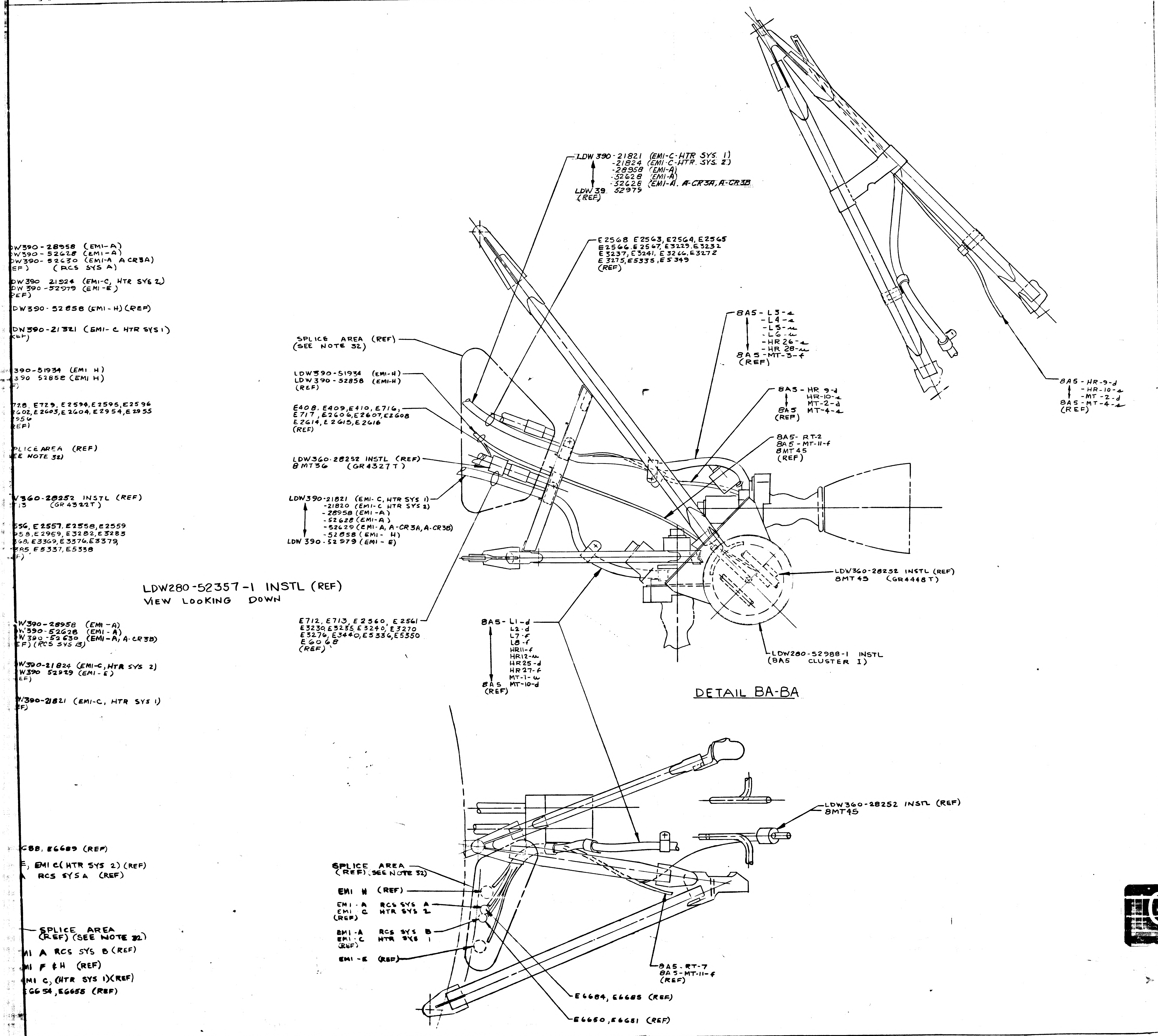
LDW 390-21821 (EMI-C-HTR SYS. 1)
-21824 (EMI-C-HTR. SYS. 2)
-28958 (EMI-A)
-52628 (EMI-A)
-52626 (EMI-A. A-CR3A, A-CR3B
LDW 39 52979
(REF)
E2568 E2563, E2564, E2565
E2566, E2567, E3229, E3232
E3237, E3241, E3266, E3272
E3275, E5335, E5349
(REF)
8A5-L3-a
-L4-a
-L5-u
-L6-u
-HR 26-a
-HR 28-u
8A5-MT-3-f
(REF)
8A5-HR-9-d
-HR-10-a
-MT-2-d
8A5-MT-4-a
(REF)
8A5-HR 9-d
HR-10-a
MT-2-d
8A5 MT-4-a
(REF)
8A5-RT-2
8A5-MT-11-f
8MT45
(REF)
SPLICE AREA (REF)
(SEE NOTE 32)
LDW390-51934 (EMI-H)
LDW390-52858 (EMI-H)
(REF)
E408, E409, E410, E716,
E717, E2606, E2607, E2608
E2614, E2615, E2616
(REF)
LDW360-28252 INSTL (REF)
8MT36 (GR4327T)
LDW390-21821 (EMI-C, HTR SYS 1)
-21820 (EMI-C HTR SYS 2)
-28958 (EMI-A)
-52628 (EMI-A)
-52629 (EMI-A, A-CR3A, A-CR3B)
-52858 (EMI- H)
LDW 390-52979 (EMI-E)
LDW360-28252 INSTL (REF)
8MT45 (GR4448T)
E712, E713, E2560, E2561
E3230, E3235, E3240, E3270
E3276, E3440, E5336, E5350
E6068
(REF)
8A5-L1-d
L2-d
L7-f
L8-f
HR11-f
HR12-u
HR25-d
HR27-f
MT-1-u
8A5 MT-10-d
(REF)
LDW280-52988-1 INSTL
(8A5 CLUSTER I)
DETAIL BA-BA
LDW280-52357-1 INSTL (REF)
VIEW LOOKING DOWN
DW390-28958 (EMI-A)
W390-52628 (EMI-A)
DW390-52630 (EMI-A A CR3A)
EF) (RCS SYS A)
DW390 21824 (EMI-C, HTR SYS 2)
DW 390-52979 (EMI-E)
EF)
DW390-52858 (EMI-H) (REF)
DW390-21821 (EMI-C HTR SYS 1)
EF)
390-51934 (EMI H)
390 52858 (EMI H)
F)
728, E729, E2594, E2595, E2596
2602, E2603, E2604, E2954, E2955
2956
EF)
PLICE AREA (REF)
EE NOTE 32)
W360-28252 INSTL (REF)
13 (GR4322T)
556, E2557, E2558, E2559
958, E2959, E3282, E3283
368, E3369, E3376, E3379,
385, E5337, E5338
F)
W390-28958 (EMI-A)
W390-52628 (EMI-A)
W390-52630 (EMI-A, A-CR3B)
EF) (RCS SYS B)
W390-21824 (EMI-C, HTR SYS 2)
W390 52929 (EMI-E)
EF)
W390-21821 (EMI-C, HTR SYS 1)
EF)
688, E6689 (REF)
E, EMI C (HTR SYS 2) (REF)
A RCS SYS A (REF)
SPLICE AREA
(REF) (SEE NOTE 32)
MI A RCS SYS B (REF)
MI F & H (REF)
MI C, (HTR SYS 1) (REF)
E6654, E6655 (REF)
SPLICE AREA
(REF) (SEE NOTE 32)
EMI H (REF)
EMI-A RCS SYS A
EMI C HTR SYS 2
(REF)
EMI-A RCS SYS B
EMI-C HTR SYS 1
(REF)
EMI-E (REF)
LDW360-28252 INSTL (REF)
8MT45
8A5-RT-7
8A5-MT-11-f
(REF)
E6684, E6685 (REF)
E6650, E6651 (REF)

MANUFACTURING OPERATIONS
UNLESS OTHERWISE SPECIFIED
NOTES CHECKED √ APPLY TO THIS DWG.

PART NUMBER AND ALL OTHER MARKINGS IN REGION MARKED ▭ USE BOTH SIDES IF NECESSARY.

FILLET AND INSIDE CORNER RADII TOLERANCES
.016R TO .062R ± .010
.063R TO .250R ± .015
OVER .250R ± .030

DEPTH SHOWN FOR TAPPED HOLES IS FULL THDS. 2-3 IMP THDS. BEYOND PERMISSIBLE.

EXTERNAL THREAD LENGTH SHOWN INCLUDES 2 IMPERFECT THREADS MAX.

DO NOT CADMIUM PLATE & PAINT HOLES OR SURFACES MARKED WITH DOUBLE ASTERISK.

MISMATCH STEP OF ± .005 PERMISSIBLE DUE TO CHANGE OF CUTTERS AT INSIDE INTERSECTING SURFACES.

DIAMETERS MARKED MUST BE CONCENTRIC WITHIN FULL INDICATOR READING

HOLES MUST BE KEPT FREE OF CHROME PLATING SOLUTION.

ALL DIMENSIONS SHOWN TO BE MET AFTER CADMIUM PLATING. THICKNESS OF PLATE .0003 MIN. TO .0005 MAX. MIN. THICKNESS TO BE .0002 ON THREADED AREAS. NO ALLOWANCE FOR PLATING IN HOLES

125 √ SURFACE ROUGHNESS INCLUDING REAMED HOLES PER MIL-STD-10

200 √ FOR ALL DRILLED HOLES

REMOVE ALL BURRS. BREAK ALL EDGES .015-.031

INSPECTION INFORMATION MINIMUM PERMISSIBLE AVERAGE EDGE DISTANCE MARKED IS

SYMBOL √ DENOTES SURFACE TO BE MACHINED

UNLESS OTHERWISE SPECIFIED TOLERANCE ON FLANGES IS ± 1/32

LENGTHS OF AN, NAS & MS AL ALY RIVETS SHORTER THAN 1 INCH ARE NOT SPECIFIED.

TOLERANCE ON LOFTED DELINEATIONS IS

DWG SIZE ~~KX~~ 34 X 70
PRINTING INFO ONLY
FULL SIZE SHEET AREA (~~KX~~ 36 X 80)= 20.0 SQ. FT.
1/2 SIZE SHEET AREA (1/4 OF FULL)= 5.00 SQ. FT.

PRINT TRIM LINE

C

B

A

LDW280-52357 M

LDW280-52357 M

02/02

NAS 9-1100

	GRUMMAN AIRCRAFT ENGRG CORP., BETHPAGE, L. I., NEW YORK			
	SIZE K	CODE IDENT NO. 26512	LDW280-52357	M
MODEL OR END ITEM	SCALE		SHEET 14.00	

⑲

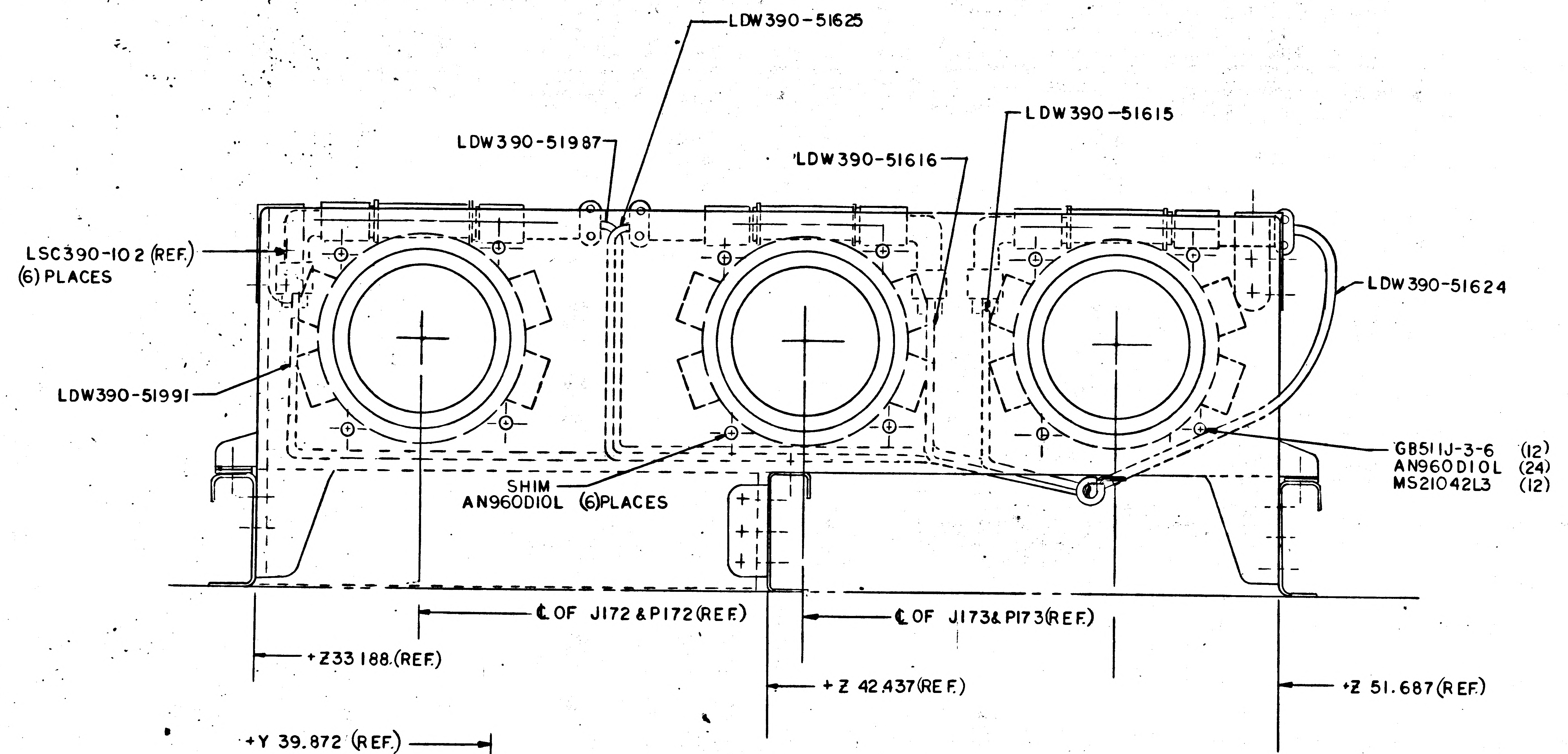
LDW390-51625
LDW390-51615
LDW390-51987
LDW390-51616
LSC390-102 (REF.)
(6) PLACES
LDW390-51624
LDW390-51991
GB511J-3-6 (12)
AN960D10L (24)
MS21042L3 (12)
SHIM
AN960D10L (6) PLACES
℄ OF J172 & P172 (REF.)
℄ OF J173 & P173 (REF.)
+Z 33.188 (REF.)
+Z 42.437 (REF.)
+Z 51.687 (REF.)

VIEW D-D
(ZONE 32A)

℄ OF J174 & P174

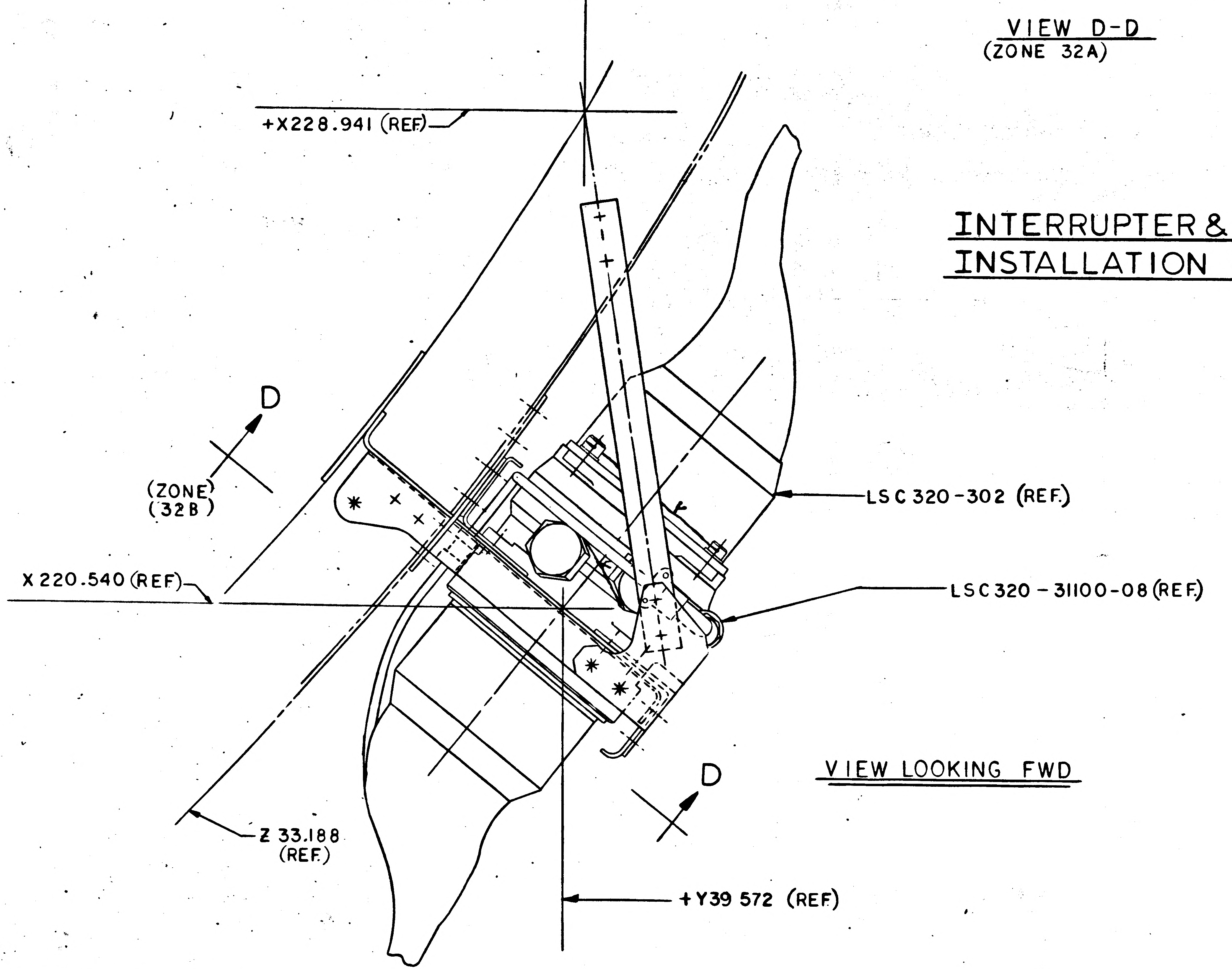
+Y 39.872 (REF.)
+X 228.941 (REF.)
D
(ZONE)
(32B)
X 220.540 (REF.)
LSC 320-302 (REF.)
LSC 320-31100-08 (REF.)
D
Z 33.188
(REF.)
+Y 39 572 (REF.)

VIEW LOOKING FWD

INTERRUPTER & LINES INSTALLATION DWG.

01/02

NAS 9-1100

MANUFACTURING OPERA
UNLESS OTHERWISE SPECIFI
NOTES CHECKED √ APPLY TO TH

PART NUMBER
AND ALL OTHER MARKINGS
IN REGION MARKED
USE BOTH SIDES IF NECESSARY.

FILLET AND INSIDE CORNER
RADII TOLERANCES
.016R TO .062R ± .010
.063R TO .250R ± .015
OVER .250R ± .030

DEPTH SHOWN FOR TAPPED
HOLES IS FULL THDS. 2-3 IMP THI
BEYOND PERMISSIBLE.

EXTERNAL THREAD LENGTH
SHOWN INCLUDES
2 IMPERFECT THREADS MAX.

DO NOT CADMIUM PLATE & PAINT
HOLES OR SURFACES MARKED
WITH DOUBLE ASTERISK.

MISMATCH STEP OF ± .005
PERMISSIBLE DUE TO CHANGE
OF CUTTERS AT INSIDE
INTERSECTING SURFACES.

DIAMETERS MARKED
MUST BE CONCENTRIC WITHIN
FULL INDICATO
READING

HOLES MUST BE KEPT FREE OF
CHROME PLATING SOLUTION.

ALL DIMENSIONS SHOWN TO BE M
AFTER CADMIUM PLATING.
THICKNESS OF PLATE .0003 MIN.
TO .0005 MAX. MIN. THICKNESS TO
BE .0002 ON THREADED AREAS.
NO ALLOWANCE FOR PLATING IN
HOLES

125 SURFACE ROUGHNESS
INCLUDING REAMED HOLES
PER MIL-STD-10

200 FOR ALL DRILLED HOLES

REMOVE ALL BURRS.
BREAK ALL EDGES .015-.031

INSPECTION INFORMATION
MINIMUM PERMISSIBLE
AVERAGE EDGE DISTANCE
MARKED IS

SYMBOL √ DENOTES SURFACE
TO BE MACHINED

UNLESS OTHERWISE SPECIFIED
TOLERANCE ON FLANGES IS ± 1/3

LENGTHS OF AN, NAS & MS AL AL
RIVETS SHORTER THAN 1 INCH ARE
NOT SPECIFIED.

TOLERANCE ON LOFTED
DELINEATIONS IS

LEM
GRUMMAN AIRCRAFT ENGRG CORP., BETHPAGE, L. I., NE

SIZE	CODE IDENT NO.	
J	26512	LDW280-5235

MODEL OR END ITEM
SCALE FULL
SHEET 7

THIS IS AN ORIGINAL

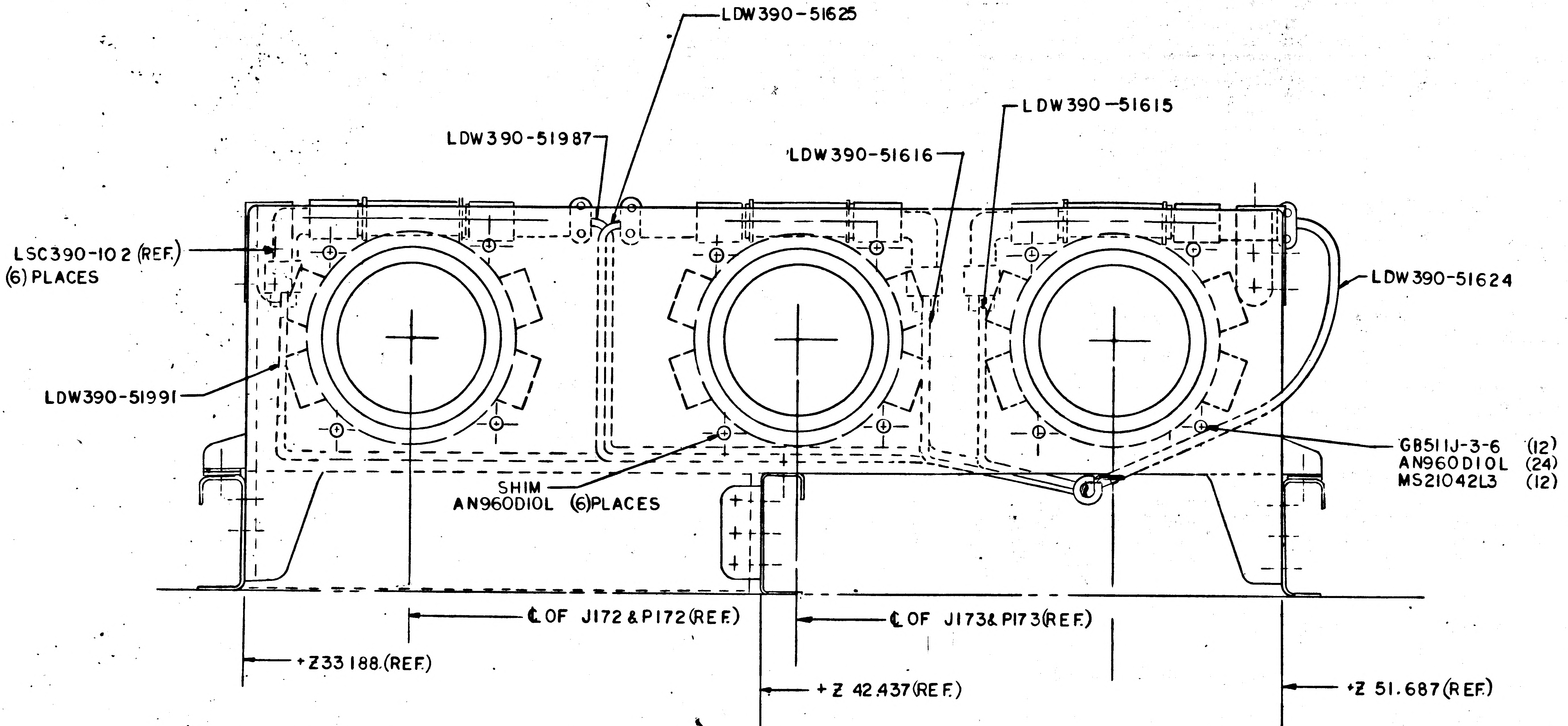
LDW390-51625
LDW390-51615
LDW390-51987
LDW390-51616
LSC390-102 (REF.)
(6) PLACES
LDW390-51624
LDW390-51991
GB511J-3-6 (12)
AN960D10L (24)
MS21042L3 (12)
SHIM
AN960D10L (6) PLACES
℄ OF J172 & P172 (REF.)
℄ OF J173 & P173 (REF.)
+Z 33.188 (REF.)
+Z 42.437 (REF.)
+Z 51.687 (REF.)

VIEW D-D
(ZONE 32A)

℄ OF J174 & P174

INTERRUPTER & LINES INSTALLATION DWG.

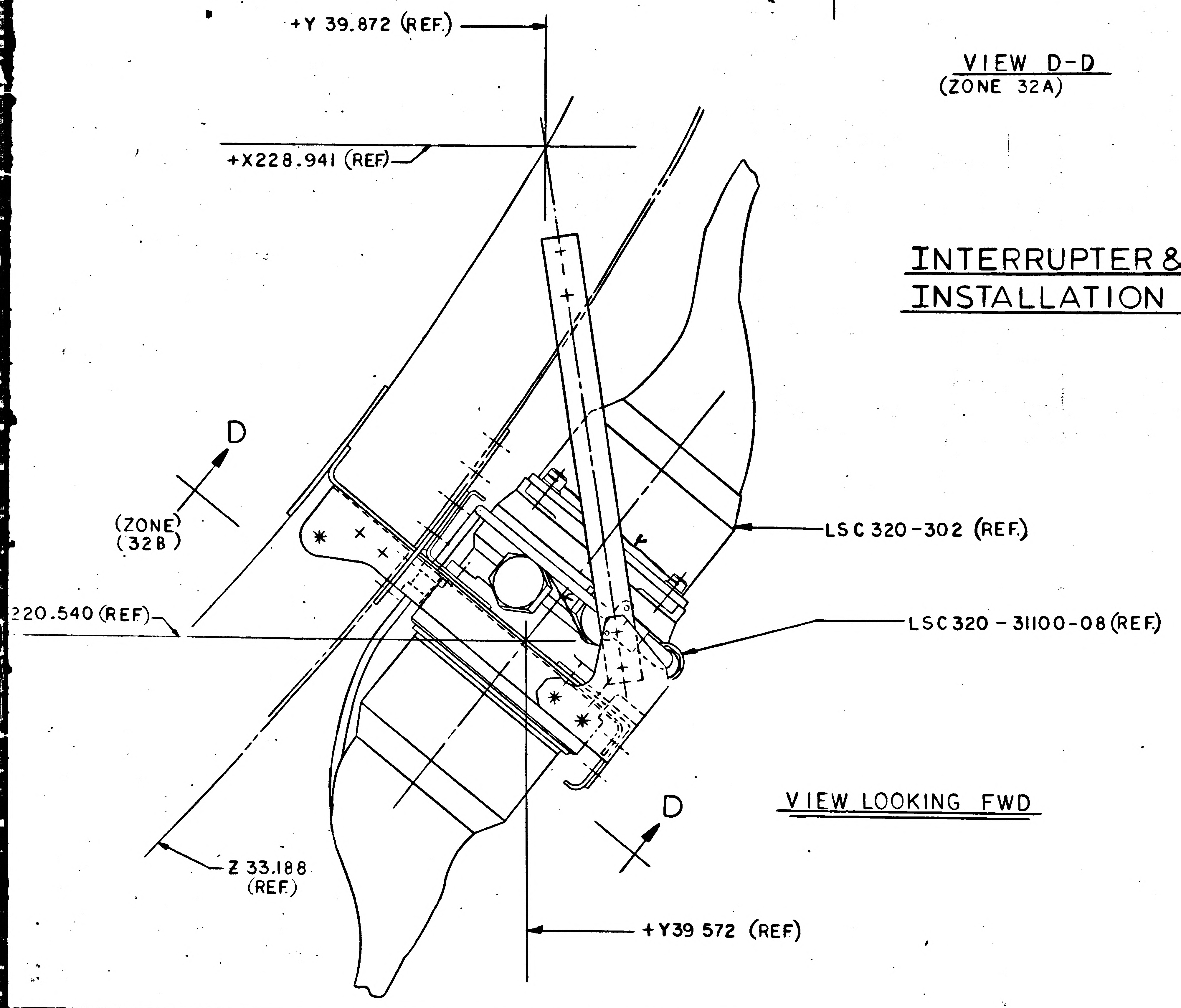
+Y 39.872 (REF.)
+X228.941 (REF.)
D
(ZONE)
(32B)
LSC 320-302 (REF.)
220.540 (REF.)
LSC 320-31100-08 (REF.)
D
Z 33.188
(REF.)
+Y39 572 (REF)

VIEW LOOKING FWD

02/02

NAS 9-1100

MANUFACTURING OPERATIONS UNLESS OTHERWISE SPECIFIED NOTES CHECKED √ APPLY TO THIS DWG.	
PART NUMBER AND ALL OTHER MARKINGS IN REGION MARKED ⊠ USE BOTH SIDES IF NECESSARY.	
FILLET AND INSIDE CORNER RADII TOLERANCES .016R TO .062R ± .010 .063R TO .250R ± .015 OVER .250R ± .030	
DEPTH SHOWN FOR TAPPED HOLES IS FULL THDS. 2-3 IMP THDS. BEYOND PERMISSIBLE.	
EXTERNAL THREAD LENGTH SHOWN INCLUDES 2 IMPERFECT THREADS MAX.	
DO NOT CADMIUM PLATE & PAINT HOLES OR SURFACES MARKED WITH DOUBLE ASTERISK.	
MISMATCH STEP OF ± .005 PERMISSIBLE DUE TO CHANGE OF CUTTERS AT INSIDE INTERSECTING SURFACES.	
DIAMETERS MARKED MUST BE CONCENTRIC WITHIN FULL INDICATOR READING	
HOLES MUST BE KEPT FREE OF CHROME PLATING SOLUTION.	
ALL DIMENSIONS SHOWN TO BE MET AFTER CADMIUM PLATING. THICKNESS OF PLATE .0003 MIN. TO .0005 MAX. MIN. THICKNESS TO BE .0002 ON THREADED AREAS. NO ALLOWANCE FOR PLATING IN HOLES	
$\sqrt{125}$ SURFACE ROUGHNESS INCLUDING REAMED HOLES PER MIL-STD-10	
$\sqrt{200}$ FOR ALL DRILLED HOLES	
REMOVE ALL BURRS. BREAK ALL EDGES .015-.031	
INSPECTION INFORMATION MINIMUM PERMISSIBLE AVERAGE EDGE DISTANCE MARKED IS	
SYMBOL ✓ DENOTES SURFACE TO BE MACHINED	
UNLESS OTHERWISE SPECIFIED TOLERANCE ON FLANGES IS ± 1/32	
LENGTHS OF AN, NAS & MS AL ALY RIVETS SHORTER THAN 1 INCH ARE NOT SPECIFIED.	
TOLERANCE ON LOFTED DELINEATIONS IS	

DWG SIZE 34

2

C

B

A

LDW280-52357

LDW280-52357

LEM	GRUMMAN AIRCRAFT ENGRG CORP., BETHPAGE, L. I., NEW YORK			
	SIZE J	CODE IDENT NO. 26512	LDW280-52357	
MODEL OR END ITEM	SCALE FULL		SHEET 7.00	

THIS IS AN ORIGINAL DWG

B

GRUMMAN AIRCRAFT ENGINEERING CORP.
CODE IDENT NO. 26512
ENGINEERING ORDER *

DWG. NO. LDW280-52357
CONTROL INFO NO. LM-5-15094

ON-3
SH. 9.00
ZONE B-48
IN CALLOUT

PANEL XII PIGTAILS
ADD → EE TABLE *

J1104
J1110
J1119
J1126
J1116
J1123
J1113
J1103

(ADD) TABLE *

ABOVE STENCIL FOR EACH CONNECTOR PAINT 1/4" X 1/2" RECTANGLE AS LISTED BELOW:

CONNECTOR	COLOR	
J1104	BLK | YEL	3M SERIES 400 VELVET COATING P/N 401-C10 & 401-F1 (PER LSP-14-4503)
J1110	WHITE	3M SERIES 400 VELVET COATING P/N 401-A10 (PER LSP-14-4503)
J1119	ORANGE	73X ORANGE INK (PER LSP-14-002)
J1126	ORN | BLK	BLK - 3M SERIES 400 VELVET COATING P/N 401-C10 (PER LSP-14-4503) 73X ORANGE INK (PER LSP-14-002)
J1116	YELLOW	3M SERIES 400 VELVET COATING P/N 401-F1 (PER LSP-14-4503)
J1123	BLK | WHT	3M SERIES 400 VELVET COATING P/N 401-C10 & 401-A10 (PER LSP-14-4503)
J1113	GRAY	3M SERIES 400 VELVET COATING P/N 401-B2 (PER LSP-14-4503)
J1103	BLACK	3M SERIES 400 VELVET COATING P/N 401-C10 (PER LSP-14-4503)

* = NEXT AVAILABLE NUMBER

RELEASED BY LIAISON

THIS IS AN ORIGINAL EO

DETAIL SPEC REQ ☐ CL II ENGRG CHG ☑ CL I ENGRG CHG ☐

REASON FOR EO: COLOR CODING OF CONNECTORS TO PREVENT MIS-MATING

DESCRIPTION OF EO: -3 PANEL XII PIGTAILS SEE TABLE * WAS PANEL XII PIGTAILS ADDED TABLE *

GAEC EO RELEASE: JK

MODEL	PROCURING ACTIVITY NO.	GAEC UNIT NO.	SUB CONTR UNIT NO.
LM		LM-2 (32)	

DRAWING CHANGE REQD: REVISE DWG ✓ RECORD EO ☐
DISPOSITION OF PARTS: REWORK ✓ SCRAP ☐

		SUPPORT	RELIAB. GROUP	GROUP LEADER	STRESS GROUP	LIAISON ENGRG	PROJ ENGRG	GOVT
APPROVED BY				—	DV	CR	JAP DAMO	
DATE	1	7/4/68 VD1			—	5/11	5-11-67	5-16-67	5-11-67

PRIORITY C5
DRAWING TITLE: LINES INSTALLATION-ELECTRONIC ASCENT STAGE - CABIN
DRAWING NO. LDW280-52357
EO NO. E1

ISSUED BY LIAISON (H. BABCOCK) X6216 SECTION VD1 GROUP NO. 335 PL 5

01
NAS 9-1100

ENG 38.2 REV 3-66 B

GRUMMAN AIRCRAFT ENGINEERING CORP.
CODE IDENT NO. 26512
ENGINEERING ORDER

DWG. NO. LDW 280-52357	EO NO. K1
CONTROL INFO NO. LDW 280A-9722	

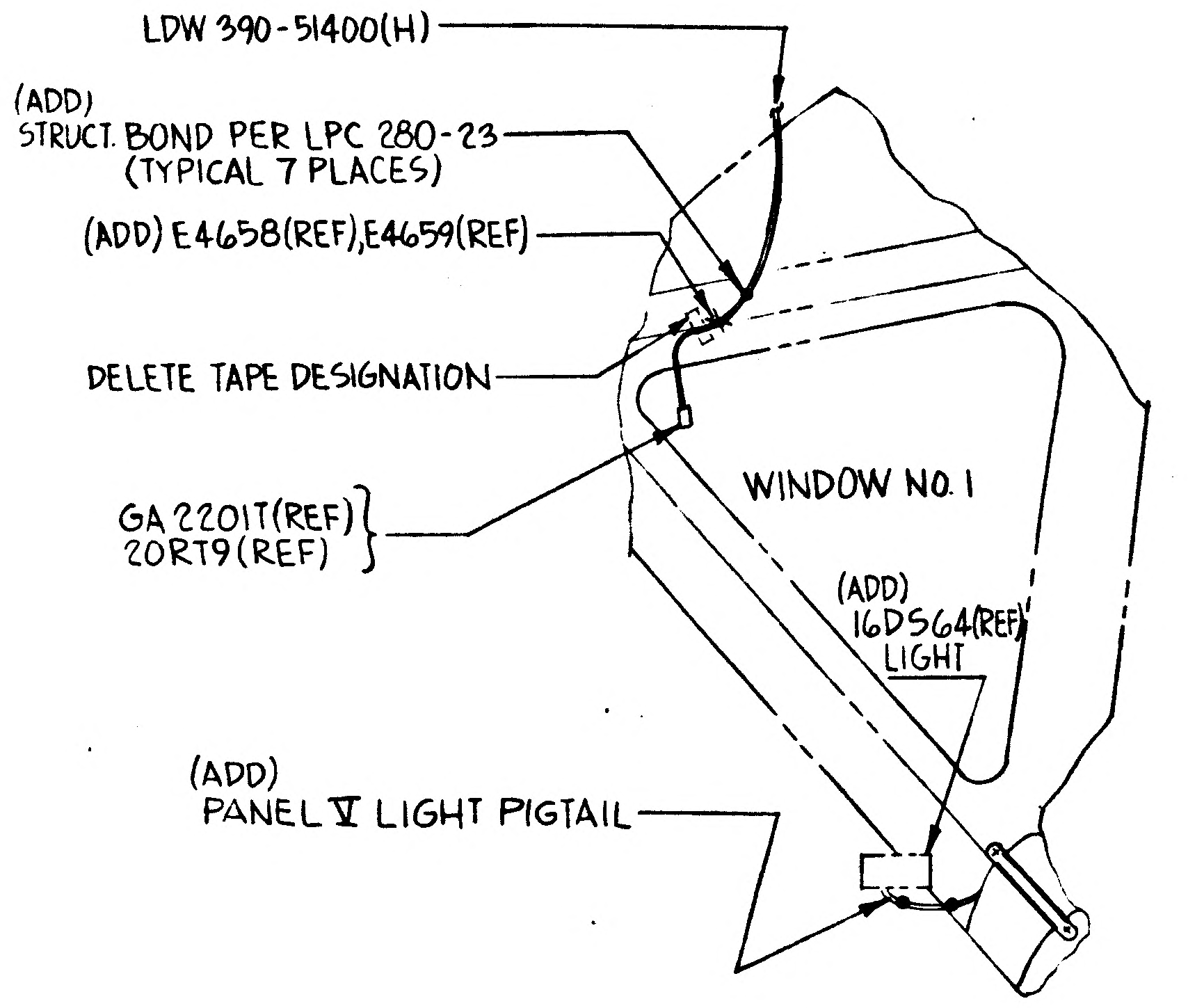

LDW 390-51400(H)
(ADD) STRUCT. BOND PER LPC 280-23 (TYPICAL 7 PLACES)
(ADD) E4658(REF),E4659(REF)
DELETE TAPE DESIGNATION
GA 2201T(REF) 20RT9(REF)
WINDOW NO. 1
(ADD) 16DS64(REF) LIGHT
(ADD) PANEL V LIGHT PIGTAIL

LDW 280-52357-3 INSTL

VIEW FRONT FACE
LKG FWD

SH 9.00 ZONE 51B

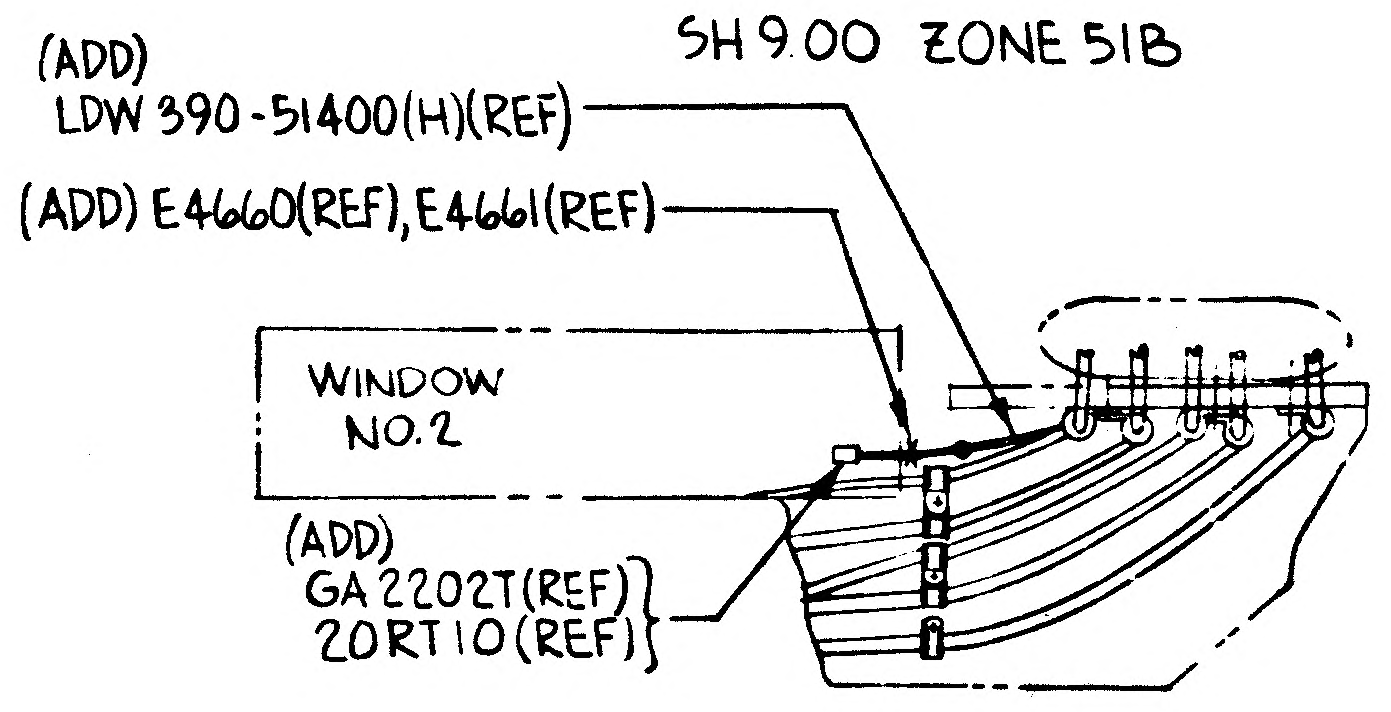

(ADD) LDW 390-51400(H)(REF)
(ADD) E4660(REF),E4661(REF)
WINDOW NO. 2
(ADD) GA 2202T(REF) 20RT10(REF)

LDW 280-52357-3 INSTL

SIDE VIEW "A"
LKG OUTB'D L.H. SIDE

SH 10.00 ZONE 56C

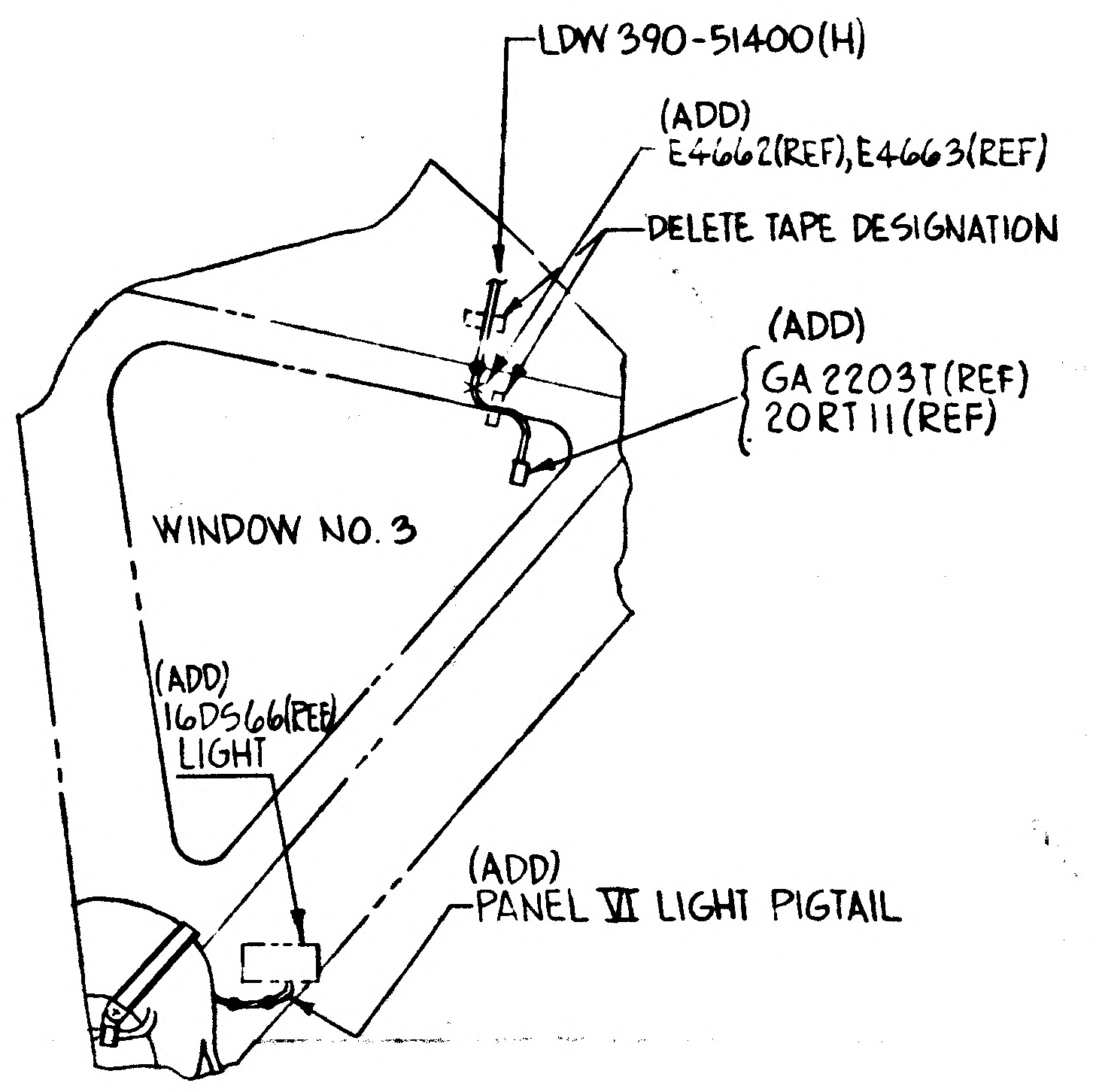

LDW 390-51400(H)
(ADD) E4662(REF),E4663(REF)
DELETE TAPE DESIGNATION
(ADD) GA 2203T(REF) 20RT11(REF)
WINDOW NO. 3
(ADD) 16DS66(REF) LIGHT
(ADD) PANEL VI LIGHT PIGTAIL

LDW 280-52357-3 INSTL

VIEW FRONT FACE
LKG FWD

SH 9.00 ZONE 50B

DESCRIPTION OF EO (CONTINUED)

NUMBERS. ADDED BONDING TO TRANSDUCER CABLES & TO LIGHT PIGTAILS. ADDED TRANSDUCER (REF) CALLOUTS. ON SH 10.00 ZONE 56C, ADDED WINDOW TEMP TRANSDUCER & REF CALLOUT. ADDED CABLE CALLOUT & BONDING DESIGNATION. ADDED SPLICE AREA & SPLICE NUMBERS.

DETAIL SPEC RQD	☐	CL II ENGRG CHG	☑	CL I ENGRG CHG	☐ LCD 1078 5

REASON FOR EO	DESCRIPTION OF EO	GAEC EO RELEASE
TO ADD BONDING FOR WINDOW TEMP TRANSDUCERS & LIGHT PIGTAILS	IN THE -3 INSTL ON SH 9.00 ZONES 50B & 51B, DELETED TAPE DESIGNATION. ADDED SPLICE AREA & SPLICE	JK 10/31/67

MODEL	PROCURING ACTIVITY NO.	GAEC UNIT NO.	SUB CONTR UNIT NO.	DRAWING CHANGE REQD		DISPOSITION OF PARTS	
				REVISE DWG	RECORD EO	REWORK	SCRAP
LV		LM2(32)		✓		✓	

APPROVED BY								
DATE	10/11/67			10/11/67	10-18		10/13	10-24-67
E	VDI	SUPPORT	RELIAB GROUP	GROUP LEADER	STRESS GROUP	LIAISON ENGRG	PROJ ENGRG	

PRIORITY	DRAWING TITLE	DRAWING NO.	EO NO.
C	LINES INSTALLATION - ELECTRONIC ASCENT STAGE - CABIN	LDW 280-52357	K1

ISSUED BY H.HELLER (1154) (10-9-67) SECTION VDI (EQUIP LINES) GROUP NO. 332 PL 25

01 NAS 9-1100

ENG 32.1 REV 3-65

GRUMMAN AIRCRAFT ENGINEERING CORP.
CODE IDENT NO. 26512
ENGINEERING ORDER

DWG. NO. LDW280-52357
EO NO. N1
CONTROL INFO NO. LM5-14964
REF EO M2

REMOVE 'E7983' FROM CALLOUT IN "TOP VIEW* IMU AREA PARTIAL"

RELEASED BY LIAISON

DETAIL SPEC REQ	☐	CL II ENGRG CHG	✓	CL I ENGRG CHG	☐

REASON FOR EO: PROVIDE GROUNDING LOCATION FOR GROUND LUGS LDW390-52637 & LDW390-55638

DESCRIPTION OF EO: -7 REMOVED 'E7983' FROM CALLOUT IN "TOP VIEW* IMU AREA PARTIAL"

(5)
GAEC EO RELEASE: VC

MODEL	PROCURING ACTIVITY NO.	GAEC UNIT NO.	SUB CONTR UNIT NO.
LM		LM2(32)	

DRAWING CHANGE REQD: REVISE DWG	RECORD EO	DISPOSITION OF PARTS: REWORK	SCRAP
✓		✓	

		SUPPORT	RELIAB. GROUP	GROUP LEADER	STRESS GROUP	LIAISON ENGRG	PROJ ENGRG	GOVT
APPROVED BY				—				
DATE	1/5/68			—	12-19-67	12-19-67	1/5/68	12-24-67
	VD1							

PRIORITY: C
DRAWING TITLE: LINES INSTALL ELEC CABIN A/S
DRAWING NO. LDW280-52357
EO NO. N1

ISSUED BY LIAISON J. Picciotti X86755 SECTION VD1 GROUP NO. 280 PL 5

01 ✓ NAS 9-1100

ENG 32.2 REV 3-65

GRUMMAN AIRCRAFT ENGINEERING CORP.
CODE IDENT NO. 26512
ENGINEERING ORDER

DWG. NO. LDW280-52357
EO NO. N2
CONTROL INFO NO. LM-5-13758

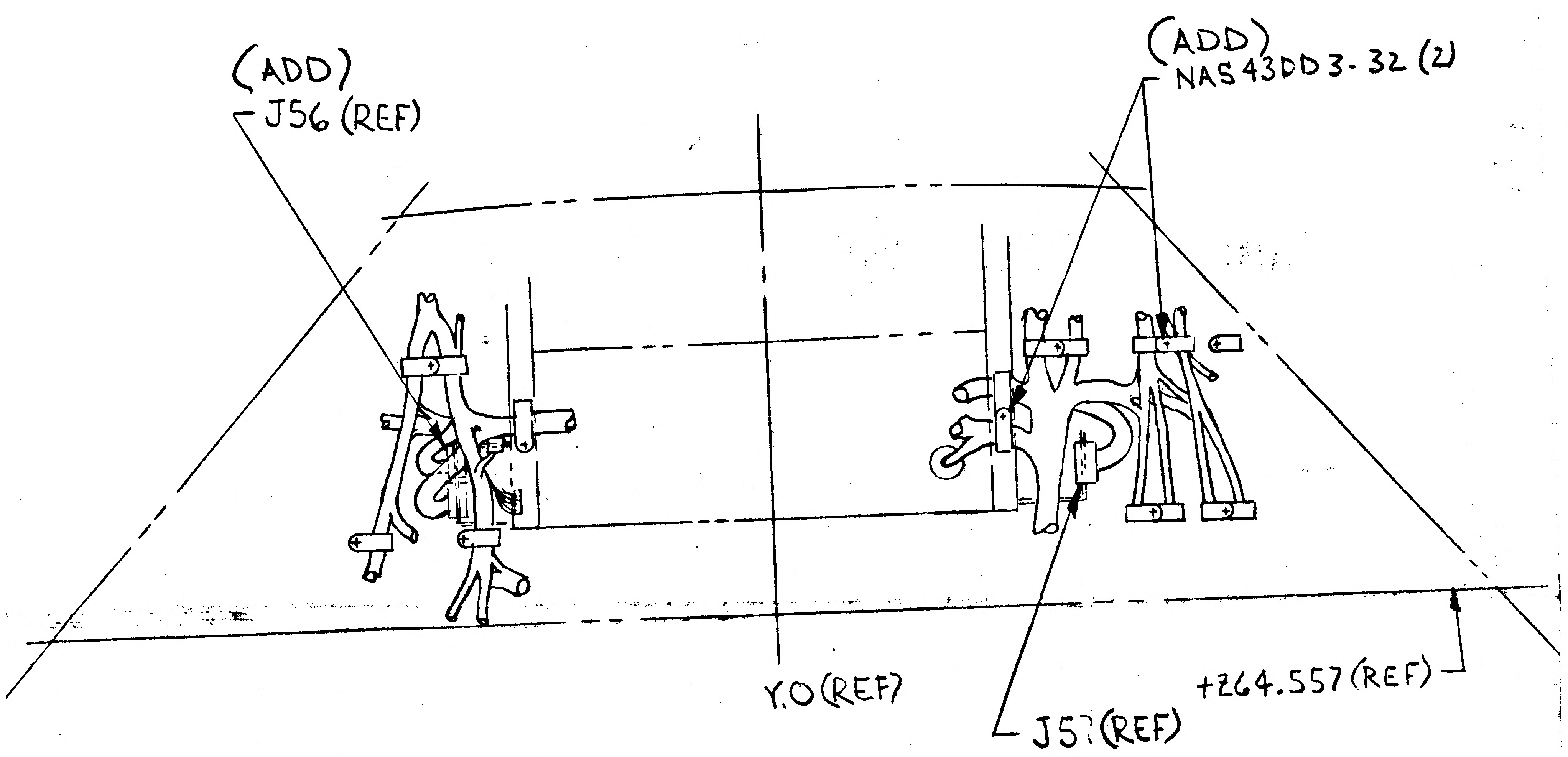

PLAN VIEW "A"
LOOKING DN TOP OF CABIN
SKINS REMOVED
(SH8 ZONE 37B)

ON-9

01 ✓
NAS 9-1100

RELEASED BY LIAISON

DETAIL SPEC REQ ☐ CL II ENGRG CHG ☑ CL I ENGRG CHG ☐

REASON FOR EO: TO CORRECT IMPROPER BEND RADIUS AT J57 AND TO ADD CALLOUT J56 TO DWG

DESCRIPTION OF EO: ON-9 IN F/D & BM
ADDED NAS43DD3-32(2) AND J56(REF)

GAEC EO RELEASE (6) VK

MODEL	PROCURING ACTIVITY NO.	GAEC UNIT NO.	SUB CONTR UNIT NO.
LM		LM 2 (32)	

DRAWING CHANGE REQD: REVISE DWG ✓ RECORD EO
DISPOSITION OF PARTS: REWORK ✓ SCRAP

APPROVED BY		SUPPORT	RELIAB. GROUP	GROUP LEADER	STRESS GROUP	LIAISON ENGRG	PROJ ENGRG
	[illegible]			—	[illegible]	[illegible]	[illegible]
DATE	1/3/68				1-3-68	1-3-68	1/5/68
	VDI						

1/3/68

PRIORITY: C
DRAWING TITLE: LINES INSTL- ELECTRONIC ASCENT STAGE - CABIN
DRAWING NO. LDW280-52357
EO NO. N2

ISSUED BY FARRELL / ROSADO (X 86454) SECTION EQUIP LINES GROUP NO. 332 PL 5

B

ENG 32.1 REV 3-65

GRUMMAN AIRCRAFT ENGINEERING CORP.
CODE IDENT NO. 26512

ENGINEERING ORDER

DWG. NO. LDW280-52357 | EO NO. N3

CONTROL INFO NO. LDW 2808 1209

ON-9

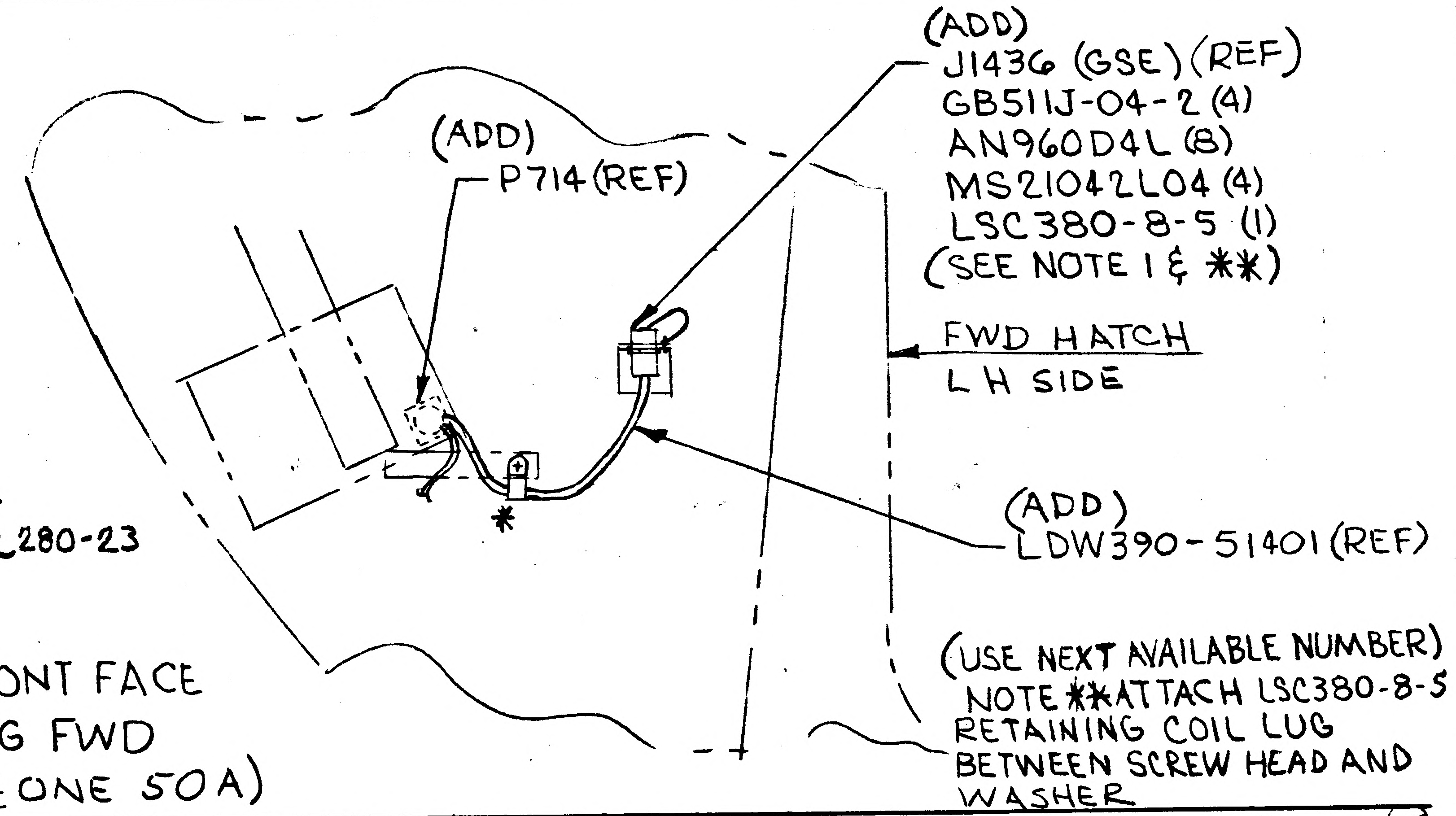

(ADD)
J1436 (GSE) (REF)
GB511J-04-2 (4)
AN960D4L (8)
MS21042L04 (4)
LSC380-8-5 (1)
(SEE NOTE 1 & **)
(ADD)
P714 (REF)
FWD HATCH
L H SIDE
*
(ADD)
LDW390-51401 (REF)
(USE NEXT AVAILABLE NUMBER)

NOTE ** ATTACH LSC380-8-5 RETAINING COIL LUG BETWEEN SCREW HEAD AND WASHER

* ADD GC500AC CLAMPS PER LPC280-23

VIEW FRONT FACE
LOOKING FWD
(SH9 ZONE 50A)

DETAIL SPEC REQ		CL II ENGRG CHG		CL I ENGRG CHG	✓ LCD 2442

REASON FOR EO: TO ELIMINATE NEED FOR DEMATING P/J 714 AT T-18 HRS

ON-9 ADDED NOTE **,

DESCRIPTION OF EO: GC500AC CLAMP (1) LDW390-51401 (REF), P714 (REF), J1436 (REF), GB511-04-2 (4), AN960D4L (8), MS21042L04 (4), LSC380-8-5

(5) (6) GAEC EO RELEASE: JK 1/11/68

MODEL	EFFECTIVITY: PROCURING ACTIVITY NO.	GAEC UNIT NO.	SUB CONTR UNIT NO.
LM		LM 2 (32)	

DRAWING CHANGE REQD: REVISE DWG	RECORD EO	DISPOSITION OF PARTS: REWORK	SCRAP
✓		✓	

APPROVED BY								
DATE	1/11/68			1-11-68	1-11-68		1/11/68	1-11-68
E	VDI	SUPPORT	RELIAB. GROUP	GROUP LEADER	STRESS GROUP	LIAISON ENGRG	PROJ ENGRG	~~GOVT~~

PRIORITY	DRAWING TITLE	DRAWING NO.	EO NO.
C	LINES INSTALLATION ELECTRONIC ASCENT STAGE CABIN	LDW280-52357	N3

1/12/68 ISSUED BY J FARRELL X1392 SECTION VDI GROUP NO. 332 PL 25

01

NAS 9-1100

GRUMMAN AIRCRAFT ENGINEERING CORP.
CODE IDENT NO. 26512
ENGINEERING ORDER

DWG. NO. LDW280-52357	EO NO. N4	
CONTROL INFO NO. LM5 13769		

ENG 32.2 REV 3-65

REF EO L8

RELEASED BY LIAISON

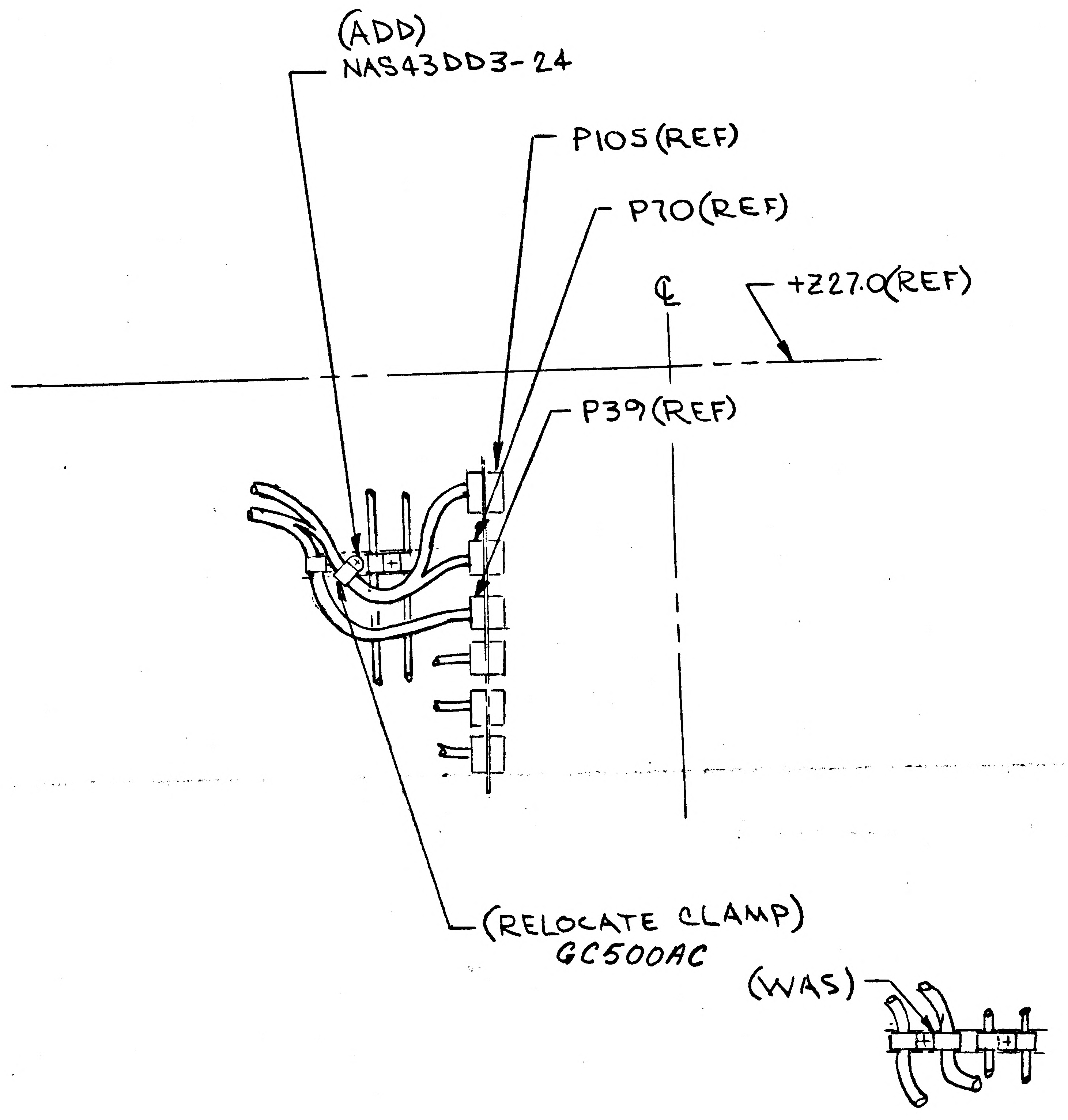

ON-9 WAS-3
VIEW LKG UP CABIN OVERHEAD
(PANEL PIGTAIL CLAMPING)

AC

~~RELEASED BY LIAISON~~ (5)

DETAIL SPEC REQ	☐	CL II ENGRG CHG	☑	CL I ENGRG CHG	☐

REASON FOR EO: TO PREVENT CHAFING

DESCRIPTION OF EO: ON-9 WAS-3 ADDED NAS43DD3-24 AND RELOCATED CLAMP GC500AC

GAEC EO RELEASE: VC

MODEL	PROCURING ACTIVITY NO.	GAEC UNIT NO.	SUB CONTR UNIT NO.
LM		LM2(32)	

DRAWING CHANGE REQD: REVISE DWG	RECORD EO	DISPOSITION OF PARTS: REWORK	SCRAP
✓		✓	

		SUPPORT	RELIAB. GROUP	GROUP LEADER	STRESS GROUP	LIAISON ENGRG	PROJ ENGRG	
APPROVED BY	JAP			—	JF	CK	JAP	
DATE	1/17/68			—	1-2-68	1-9-68	1/17/68	1/11/68
	VDI							

PRIORITY: C

DRAWING TITLE: LINES INSTALLATION ELECTRONIC ASCENT STAGE CABIN

DRAWING NO.: LDW280-52357

EO NO.: N4

ISSUED BY J FARRELL / ROSADO X86454 SECTION VDI GROUP NO. 332 PL 5

01
NAS 9-1100

GRUMMAN AIRCRAFT ENGINEERING CORP.
CODE IDENT NO. 26512
ENGINEERING ORDER

DWG. NO.	LDW280-52357
CONTROL INFO NO.	LDW 280B1579
EO NO.	N5

DESCRIPTION OF EO (CONT)
OF LDW 390-52801(G) AND REARRANGE PICTURE ACCORDINGLY. ADDED NAS43DD3-24(1) SPACER.

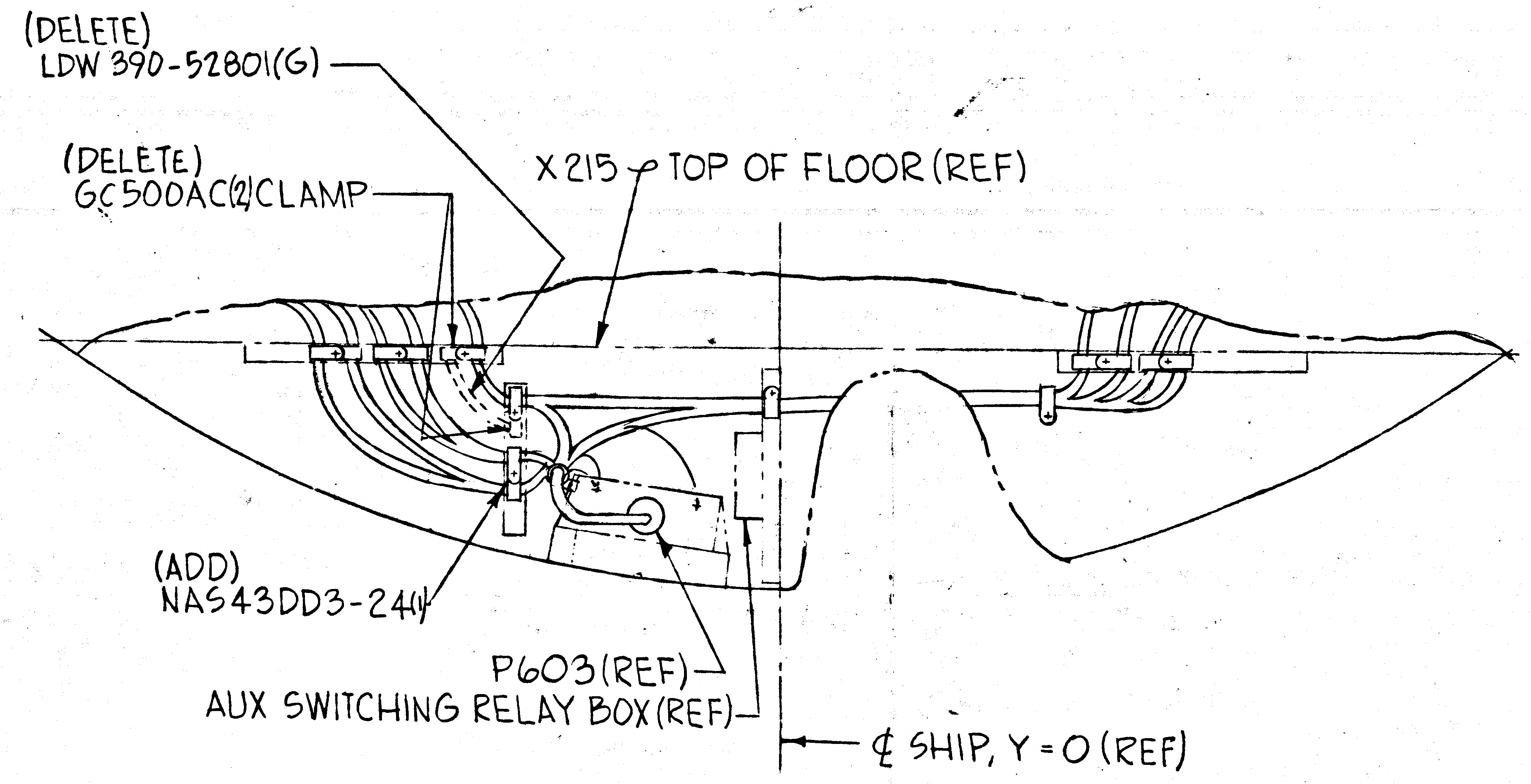
(DELETE)
LDW 390-52801(G)
(DELETE)
GC500AC(2) CLAMP
X215 TOP OF FLOOR (REF)
(ADD)
NAS43DD3-24(1)
P603 (REF)
AUX SWITCHING RELAY BOX (REF)
℄ SHIP, Y = 0 (REF)

VIEW +Z27 BULKHD
LOOKING AFT
SH 9.00 ZONE 46B
LDW 280-52357-9 INSTL

CLAMP PER LPC 280-23

DETAIL SPEC REQ		CL II ENGRG CHG	✓	CL I ENGRG CHG		LCD 1078				(5)
REASON FOR EO						DESCRIPTION OF EO				GAEC EO RELEASE
TO REDUCE CHAFING & MAINTAIN CABLE SEPARATION.						IN -9 INSTL, REMOVED GC500AC(2) CLAMPS BECAUSE OF DELETION (CONT. IN FIELD)				JK 1/22/68
EFFECTIVITY				DRAWING CHANGE REQD		DISPOSITION OF PARTS		APPROVED BY		
MODEL	PROCURING ACTIVITY NO.	GAEC UNIT NO.	SUB CONTR UNIT NO.	REVISE DWG	RECORD EO	REWORK	SCRAP			
LM		LM-2(32)		✓		✓		J.W. CW		
								DATE 1/20/68	1/20/68 1/20/68	1/20/68 1-20-68
				PRIORITY	DRAWING TITLE			E VDI		
				C	LINES INSTL ELECTRONIC ASCENT STAGE - CABIN			SUPPORT / RELIAB. GROUP / GROUP LEADER / STRESS GROUP / LIAISON ENGRG / PROJ ENGRG		
								DRAWING NO. LDW280-52357		EO NO. N5

1/20 ISSUED BY H. HELLER (X1154) (1-20-68) SECTION VDI (EQUIP LINES) GROUP NO. 332 PL 25

BMG 32.2 REV 3-65

B
ENG 32.2 REV 3-65

GRUMMAN AIRCRAFT ENGINEERING CORP.
CODE IDENT NO. 26512
ENGINEERING ORDER

DWG. NO. LDW280-52357
EO NO. N6
CONTROL INFO NO. LDW280B1454

(ADD) NOTE *
(USE NEXT AVAIL NOTE #)
*. ADD WASHERS BETWEEN DEAD FACE BRKT & INTERRUPTER MOUNTING SURFACES.

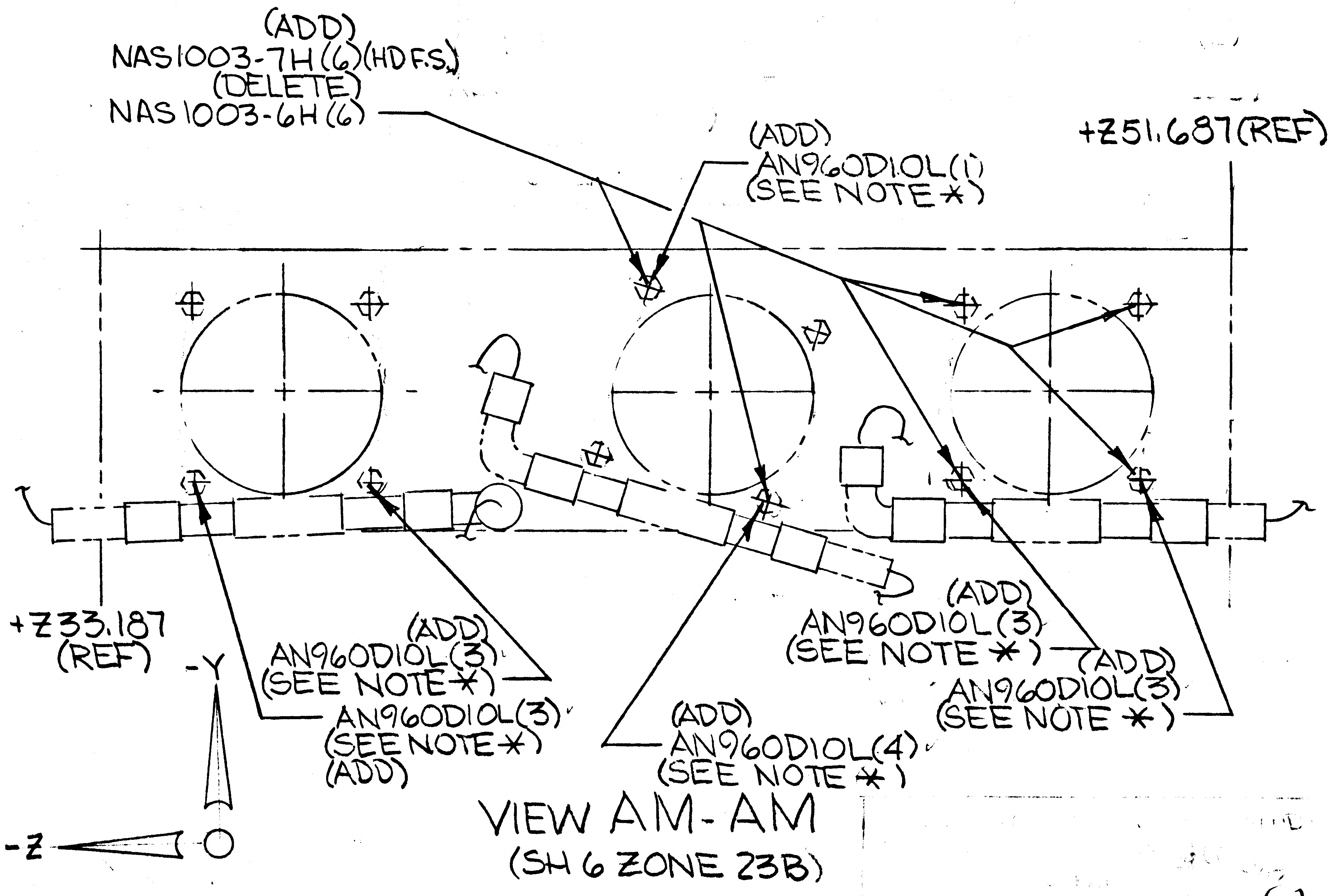
(ADD)
NAS1003-7H(6)(HD F.S.)
(DELETE)
NAS1003-6H(6)
(ADD)
AN960D10L(1)
(SEE NOTE *)
+Z51.687(REF)
+Z33.187
(REF)
-Y
-Z
(ADD)
AN960D10L(3)
(SEE NOTE *)
AN960D10L(3)
(SEE NOTE *)
(ADD)
(ADD)
AN960D10L(4)
(SEE NOTE *)
(ADD)
AN960D10L(3)
(SEE NOTE *)
(ADD)
AN960D10L(3)
(SEE NOTE *)

VIEW AM-AM
(SH 6 ZONE 23B)

(5)

DETAIL SPEC REQ		CL II ENGRG CHG	✓	CL I ENGRG CHG		LCD 1078	PK6 52

REASON FOR EO: PROVIDE LEVEL MTG SURFACE FOR DEAD FACE INTERRUPTERS

DESCRIPTION OF EO: AN960D10L (17) ON-7 ADDED NAS1003-7H(6)(HD F.S.), DELETED NAS1003-6H (HD. F.S.)

GAEC EO RELEASE: JK 1/25/68

MODEL	PROCURING ACTIVITY NO.	GAEC UNIT NO.	SUB CONTR UNIT NO.
LM		LM-2(32)	

DRAWING CHANGE REQD: REVISE DWG	RECORD EO	DISPOSITION OF PARTS: REWORK	SCRAP
✓		✓	

	R	VDI	SUPPORT	RELIAB. GROUP	GROUP LEADER	STRESS GROUP	LIAISON ENGRG	PROJ ENGRG	
APPROVED BY		JaP			JW	BW		JaP	JP
DATE		1/22/68			1-22-68	1-23		1/22/68	1-24-68

PRIORITY: C
DRAWING TITLE: LINES INSTL-ELECT-A/S CABIN
DRAWING NO.: LDW280-52357
EO NO.: N6

ISSUED BY R. BIDONDE X1392 SECTION VDI (EQUIP. LINES) GROUP NO. 332 PL 25

01
NAS 9-1100

Ⓑ

ENG 32.2 REV 3-65

GRUMMAN AIRCRAFT ENGINEERING CORP.
CODE IDENT NO. 26512
ENGINEERING ORDER

DWG. NO. LDW280-52357	EO NO. N7
CONTROL INFO NO. LM-5-13786	

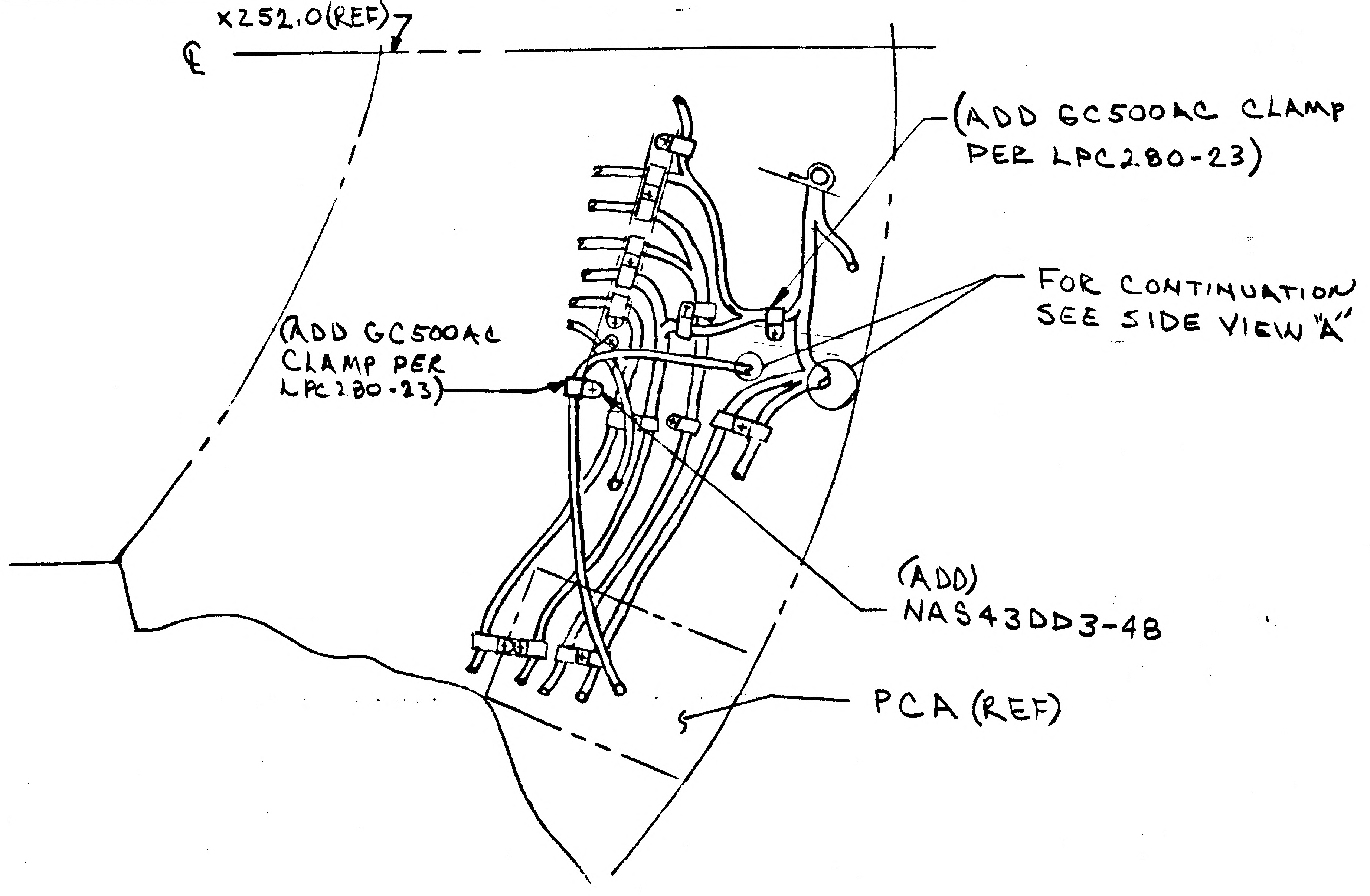

X252.0(REF)
℄
(ADD GC500AC CLAMP PER LPC280-23)
FOR CONTINUATION SEE SIDE VIEW "A"
(ADD GC500AC CLAMP PER LPC280-23)
(ADD) NAS43DD3-48
PCA (REF)

VIEW +Z27 BHD LKG AFT
(SH9 ZONE 46B)

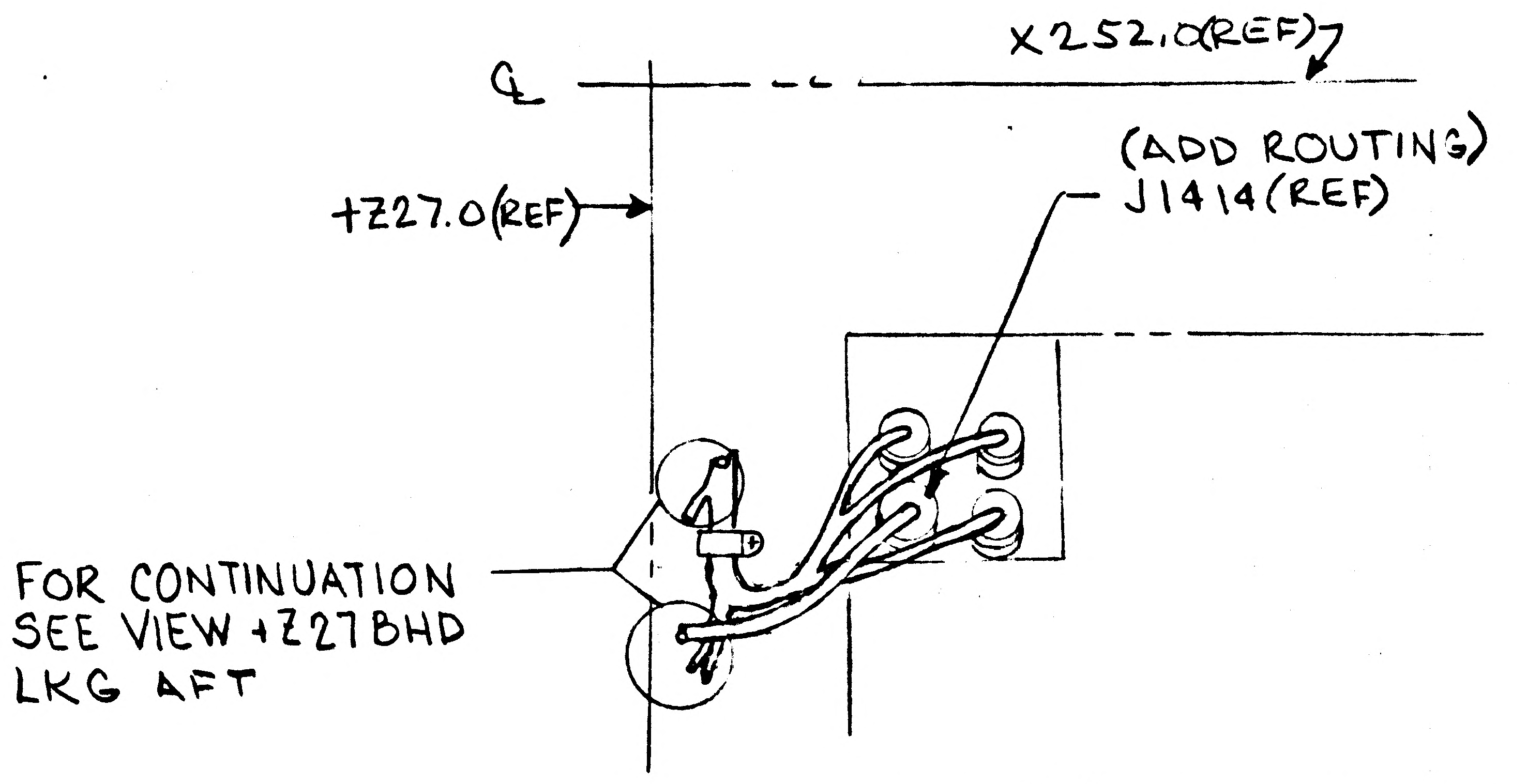

℄
X252.0(REF)
+Z27.0(REF)
(ADD ROUTING) J1414(REF)
FOR CONTINUATION SEE VIEW +Z27 BHD LKG AFT

SIDE VIEW "A" LKG OUTBD LH SIDE
(SH10 ZONE 56A)

ON-9

RELEASED BY LIAISON

DETAIL SPEC REQ		CL II ENGRG CHG	✓	CL I ENGRG CHG	

REASON FOR EO: TO RECTIFY LM-2 SNAKE-DOWN CRAB *93

DESCRIPTION OF EO: ON-9 ADDED ROUTING FOR J1414(REF), NAS43DD3-48(1), & GC500AC CLAMPS (2)

GAEC EO RELEASE (5)

MODEL	PROCURING ACTIVITY NO.	GAEC UNIT NO.	SUB CONTR UNIT NO.
LM		LM 2 (32)	

DRAWING CHANGE REQD: REVISE DWG	RECORD EO	DISPOSITION OF PARTS: REWORK	SCRAP
✓		✓	

	VDI	SUPPORT	RELIAB. GROUP	GROUP LEADER	STRESS GROUP	LIAISON ENGRG	PROJ ENGRG	SEC
APPROVED BY								
DATE	1/27/68				1-24-68	1-24-68	1/27/68	1-24-68

PRIORITY	DRAWING TITLE	DRAWING NO.	EO NO.
C	LINES INSTL ELECTRONIC ASCENT STAGE CABIN	LDW280-52357	N7

ISSUED BY J FARRELL 86454 SECTION VDI GROUP NO. 332 PL 5

01

NAS 9-1100

ENG 32.1 REV 3-66 B

GRUMMAN AIRCRAFT ENGINEERING CORP.
CODE IDENT NO. 26512
ENGINEERING ORDER

DWG. NO. LDW280-52357
EO NO. N8
CONTROL INFO NO. LM5-13800

ON-9 INSTL IN F/D & BM

SH 9 ZONE 50A VIEW LKG FWD FRONT FACE:

REF J1436 – DUST CAP CALLOUT LSC380-8-5 S/B LSC390-8-6

RELEASED BY LIAISON

DETAIL SPEC REQ ☐ CL II ENGRG CHG ☑ CL I ENGRG CHG ☐

(5)

REASON FOR EO: DUST CAP TOO SMALL FOR ASSOCIATED PLUG

DESCRIPTION OF EO: ON-9 LSC390-8-6 WAS LSC380-8-5

GAEC C EO RELEASE

MODEL	EFFECTIVITY: PROCURING ACTIVITY NO.	GAEC UNIT NO.	SUB CONTR UNIT NO.
LM		LM2 (32)	

DRAWING CHANGE REQD: REVISE DWG	RECORD EO	DISPOSITION OF PARTS: REWORK	SCRAP
✓		✓	

	VDI	SUPPORT	RELIAB. GROUP	GROUP LEADER	STRESS GROUP	LIAISON ENGRG	PROJ ENGRG	~~GOVT~~
APPROVED BY				—		CH		
DATE	2/1/68			—	1-30-68	1-29-68	2/1/68	1/30/68

PRIORITY: C

DRAWING TITLE: LINES INSTL ELECTRONIC ASCENT STAGE CABIN INTERIOR

DRAWING NO. LDW280-52357

EO NO. N8

ISSUED BY R J FARRELL X 86454 SECTION VDI GROUP NO. 332 PL 5

01

NAS 9-1100

REVISIONS

CHANGE LTR	ITEM NO.	SHEET NO.	ZONE	GRUMMAN INFO ONLY	DET SPEC	CLASS I	CLASS II	ENGRG ORDER	DESCRIPTION	EFFECTIVITY	DISPOSITION OF EXISTING PARTS REWORK	DISPOSITION OF EXISTING PARTS SCRAP	CHANGED BY AND DATE	ENGRG APPD	GOVT APPD
A	1	3.01						LEO 314	ADDED NOTE # 11	LM-2(32)	NOT	REQD	HUGH RYAN 3-30-67		
	2	3.01						LEO 377	ADDED NOTE # 12						
	3	2.00 5						EO A3	FOR -1 INSTL: IN B/M LDW280-16030-21 QTY 1 WAS 2, ADDED LDW280-16030-23(1). IN VIEW L-L LDW280-16030-23 WAS -21						
	4	5 4 2.01,4 5 4 5 5 5 5 2.00	16C 9A 9B 10B 17D 4C 17A 17B 13B 21C	LAV260-206				EO A4	ON -1 INSTL IN F/D ADDED "VIEW LKG UP TOP HATCH". IN F/D & B/M ADDED MS21625B3T(3) GROMMET. IN F/D "VIEW LKG OUTBD RH" RELOCATED P-758 CONNECTOR, GF9996U 7A5 UNIT, E441 THRU E444 SPLICES AND REROUTED CABLES TO AGREE. IN F/D ADDED NOTE "USE EXIST HARDWARE" IN F/D & B/M ADDED LSC390-8-3 (1) CAP IN F/D VIEW A-A REVISED PICTURE OF ROUTING OF LDW390-51400 &-51401. IN F/D & B/M ADDED (1) LDW280M 16138-11 SPACER. REVISED VIEW LKG OUTBD LH TO AGREE IN F/D VIEW B-B RELOCATED "LOW LEVEL COMM D" REVISED PICTURE OF ROUTING OF LDW390-51400&-51401 IN F/D VIEW G-G RELOCATED "HIGH LEVEL COMM F" REVISED PICTURE OF ROUTING OF LDW390-51400&-51401 IN F/D ADDED "VIEW LKG OUTBD ~ DOCKING TUNNEL" IN F/D & B/M ADDED V28-420101 & V28-420102 CABLE ASSYS.						
	5	2.00,5	12C 13C						REF EO A3 DESCRIPTION OF CHANGE S/B ON -1 INSTL IN B/M REMOVED (2) LDW280-16030-11 ADDED (1) LDW280-16030-21 & (1) LDW280-16030-23. IN VIEW L-L LDW280-16030-23 WAS -11. IN VIEW M-M LDW280-16030-21 WAS -11.						
	6	5	21A 22B						TO VIEW R-R ADDED LOCATION FOR VIEW S-S. ADDED VIEW S-S WITH 20A156, 20A157, 20A158 AMPLIFIERS. REVISED VIEW LKG OUTBD LH SIDE TO AGREE. 20A70 WAS 20A75						
	7	4	3D						FOR SECT L-L & SECT M-M "ZONE 13C SH5" WAS SEE SH 2						
	8	3.01							IN GENERAL NOTES ADDED NOTE 13 REF EO A4						
	9	4	7C 7D						REVISED PICTURE OF P945, P948, P936, P939, P1137. CALLOUT P944 WAS P994. ADDED CALLOUT P1137, REMOVED PICTURE						

CHG APPROVED LTR	GROUP LDR	VDI	STRUCTURE	STRUCTURE						PROJECT	RELEASE
A		J. Wong	m/m 4/6	4/7						4/13	

FOR CONTINUATION OF REVISIONS SEE SHEET 1.11

GRUMMAN AIRCRAFT ENGRG CORP, BETHPAGE, L. I., NEW YORK

SIZE	CODE IDENT NO.		
B	26512	LDW280-52358	A
SCALE NONE		SHEET 1.10	

ENG 77.3 5-66

01

NAS 9-1100

REVISIONS

CHANGE LTR	ITEM NO.	SHEET NO.	ZONE	GRUMMAN INFO ONLY	DET SPEC	CLASS I	CLASS II	ENGRG ORDER	DESCRIPTION	EFFECTIVITY	DISPOSITION OF EXISTING PARTS		CHANGED BY AND DATE	ENGRG APPD	APPD
											REWORK	SCRAP			
A	9	4, 5	6D 5D 8B 8C 9C 14D 15D 18D 9D 10D 2D 4D 5C						OF CLAMP. REMOVED PICTURE OF 'F' CABLE & REVISED PICTURE OF ADJACENT CABLES. REVISED PICTURE OF ROUTING OF CABLE FROM LDW360-21283, ALSO OF 21941 COAX CABLE. ADDED POLARIZING KEYWAY. ALL TO AGREE WITH VEHICLE.	LM-2 (32)	NOT	REQD	HUGH RYAN 3-30-67	JK	
	10	4	11B 6B 6C 7C 10B						ON -1 INSTL IN F/D & B/M ADDED (2) LSC380-00602-13 ADAPTOR, (31) GB511J-04-2 BOLT, (62) AN960D4L WASHER, (31) MS21042L04 NUT.						
	11	4	10A 12B						ADDED VIEW T-T & RELOCATED SPLICES E4911, E4912						
	12	2.00, 2.01 3.00, 3.01 4, 5							ON -1 INSTL IN B/M REMOVED GB511J-08-3 THRU-6, MS21919DH-2, MS21919DH3, MS21919WDH4 THRU 32, MS21266-1N THRU -4N, NAS43DD3-16, NAS43DD3-24, NAS43DD3-32, ADDED QTY GB511J-08-1 (3), GB511J-08-2 (8), AN960D8L (12), MS21042L08 (3). GT11J-BR08-12(30) WAS GT511J-BR08-12, GT11J-BR3-10 (1) WAS GT511J-BR3-10, GT11J-BR3-12 (3) WAS GT511J-BR3-12. ADDED AN960D, MS21042L, MS2099NC32, MS21266, GS830G, GC500S, GB511J, MS21919WDH DELETED NOTES #6, #7, #10. ADDED NOTE #14. IN F/D ADDED REF TO ALL CALLOUTS FOR NUMBERS NOT LISTED IN B/M. ADDED "SPLICE" TO ALL SPLICE CALLOUTS				JK		

FOR CONTINUATION OF REVISIONS SEE SHEET ______

GRUMMAN AIRCRAFT ENGRG CORP, BETHPAGE, L. I., NEW YORK			
SIZE B	CODE IDENT NO. 26512	LDW280-52358	A
SCALE NONE		SHEET 1.11	

ENG 77.3 5-65

01

NAS 9-1100

NOTES:

1. SUBSTITUTION OF NAS1132V OR AN525 FOR THE GB511J-08 BOLTS IS PERMISSIBLE
2. ALL CONNECTOR NUMBERS SHALL BE PLACED ON STRUCTURE ADJACENT TO THE RESPECTIVE CONNECTOR PER LSP-14-002, TYPE VII, CLASS 2. MARK WITH 3/16 HIGH LETTERS.
3. PRIOR TO ASSEMBLY OF THE GT11J TERMINAL INSTALLATION, CLEAN STRUCTURE IN ACCORDANCE WITH LSP390-001
4. AFTER ASSEMBLY OF THE GT11J TERMINAL INSTALLATION AND THE ADDITION OF ALL TERMINAL LUGS REQUIRED, BRUSH COAT THE ENTIRE ASSEMBLY WITH EPON 919 PER LSP14-14201. ALL SURFACES TO BE CLEANED PER LSP14-7011 PRIOR TO COATING
5. SPECIFICATION LSP390-002 SHALL BE USED IN CONJUNCTION WITH THIS INSTALLATION
6. ~~MS21266-1N, 2N, 3N OR 4N SHALL BE BONDED TO STRUCTURE AS REQUIRED TO PREVENT CHAFFING OF WIRE BUNDLES. BOND PER LSP14-22500. USE EC 2216 ADHESIVE~~
7. ~~ALL COAX CONNECTORS SHALL BE LOCKWIRED WHERE LOCKWIRE HOLES EXIST IN ACCORDANCE WITH MS33540, USING MS20995F32 LOCKWIRE. WHERE NO LOCKWIRE HOLES ARE PRESENT USE LOCKTITE ON THREADS PRIOR TO MATING OF PLUG TO CONNECTOR~~
8. HARNESS INSTALLATION PROCEDURE (REF ICD-LIS420-10001)
   - a) OBTAIN HARNESS ASSY INCLUDING CLAMP & HARDWARE KIT
   - b) ATTACH CABLE CLAMPS (E,F,G & H) TO STRUCTURE
   - c) POSITION HARNESS IN VEHICLE, PLACING HARNESS LOCATOR BANDS IN CABLE CLAMPS ~ FASTEN CLAMPS

GRUMMAN AIRCRAFT ENGRG CORP., BETHPAGE, L. I., NEW YORK

SIZE	CODE IDENT NO.	
B	26512	LDW 280-52358

SCALE
SHEET 3.00

01

NAS 9-1100

NOTES CONTD:

8. (d) MATE ONLY THOSE CONNECTORS WHICH INTERFACE WITH VEHICLE STUCTURE (P215, P216, P224, P217, P223, P218, P222, P219, P220 & P221

(e) ATTACH REMAINING CABLE CLAMPS (A, B, C & D) TO HARNESS AS INDICATED BY CLAMP LOCATOR BANDS.

(f) MATE HARNESS CONNECTORS (56P4, 56P3, 56P1 & 56P2) TO THE CONNECTORS ON THE LGC, CDU, PSA & SCM USING THE FOLLOWING PROCEDURE:

(1). PLACE THE APPROPRIATE CONNECTOR GASKET OVER THE LOCATING PINS ON THE EQUIPMENT RECEPTACLE

(2) PLACE HARNESS CONNECTOR HALF IN PROPER ALIGNMENT.

(3) TIGHTEN THE FOUR CORNER FASTENERS SEQUENTIALLY IN TWO TURN INCREMENTS UNTIL A TORQUE OF 13~15 INCH POUNDS IS OBTAINED ON EACH FASTENER.

(4) TIGHTEN THE REMAINING TWO FASTENERS TO A TORQUE OF 13~15 INCH POUNDS.

(g) ATTACH THE REMAINING CABLE CLAMPS (A, B, C & D) TO THE LGC, CDU & SCM USING THE TWO BOLTS PROVIDED FOR EACH CLAMP.

9. ALL CABLE ASSY NUMBERS ARE NUMBERS OF LDW 390, AND ARE SHOWN FOR REF ONLY

10. ALL CABLES TO BE CLAMPED TO STRUCTURE AS SHOWN IN F/D. APPROPRIATE SIZES OF THE FOLLOWING TO BE USED: MS21919WDH, GB511J, MS21042 & AN960DL.

11. SUBSTITUTION OF NAS1132V *, AN525-832R* OR AN525-832* BOLTS FOR THE GB511J-08* BOLT IS PERMISSIBLE.

12. MS21919WDH CLAMPS & GS500S CLAMPS ARE INTERCHANGEABLE & EITHER MAY BE USED IN THIS INSTALLATION.

13. COMMERCIAL PART, SEE SPECIFICATION CONTROL DRAWING BEFORE ORDERING.

14. SELECTION AND INSTALLATION OF LINE CLAMPS, CLAMP ATTACHING HDW., ANTI-CHAFE SLEEVES, GROMMETS & LOCKWIRE SHALL BE IN ACCORDANCE WITH LPC 280-23

15. BRUSH COAT PER LSP-14-14201

16. WRAP ENTIRE BRACKET WITH GT835C-4 TAPE - MINIMUM 3 LAYERS.

GRUMMAN AIRCRAFT ENGRG CORP., BETHPAGE, L. I., NEW YORK			
SIZE B	CODE IDENT NO. 26512	LDW280-52358	B (B)
SCALE		SHEET 3.01	

ENG 73.1 5-64

01

NAS 9-1100

REVISIONS

CHANGE LTR	ITEM NO.	SHEET NO.	ZONE	GRUMMAN INFO ONLY	DET SPEC	CLASS I	CLASS II	ENGRG ORDER	DESCRIPTION	EFFECTIVITY	DISPOSITION OF EXISTING PARTS REWORK	DISPOSITION OF EXISTING PARTS SCRAP	CHANGED BY AND DATE	ENGRG APPD	GOVT APPD
B	1	2.00, 4	5B	1			✓	EO B1	ON-1 INSTL LDW280-16030-25 WAS LDW280-16030-13	LM-2	✓		K. NELSON 11-3-67		
	2	2.00, 4	6C	6				EO B2	ON-1 INSTL 6010670 WAS 6010659		NOT	REQD			
	3	2.00 4	11B			✓		EO B3 LCD 1429, CCA581	ON-1 INSTL GB511J-04-2(4) WAS(3), AN960D4L(8) WAS (6), MS21042L08(4) WAS(3), & RELOCATED PICTURE OF J 85		✓				
	4	2.01, 4 5	10B 12A	4			✓	EO B4 LCD 1516	ON-1 INSTL REVISED VIEW LKG OUTBD R/S; ADDED NAS43DD3-48, SECT U-U, LSC330-190 (REF), LDW280-52353 (REF)						
	5	2.00, 2.01 3.01, 4 5 4 5 4	5C 3D 3A 4C 5B 17A 5A 17A 17B 6A 6B 8B 9A 11D 3A					EO B5 LCD 1306 LCD 1788	ON-1 INSTL-VIEW LKG OUTBD L/H ADDED SEPARATION CODES A-CE1B, C-CS1B, E-CS1A, LDW280-16083(REF), 21663 P-766 TO P-38(REF) & REMOVED PICTURE OF 20A156, 20A157, 20A158; ADDED GB511J-4-4(1), AN960D416L(2), MS21042L4(1) TYP 2 PLACES; GB511J-08-2(4), AN960D8L(4) & REVISED PICTURE OF CABLES; VIEW A-A ADDED LDW280-16083-1 (1 REQD), GB511J-4-6(1), AN960D416L(2), MS21042L4(1) TYP 2 PLACES, REVISED PICTURE OF CABLES & ADDED PICTURE OF CLAMP & SEE NOTE 5, SEE NOTE 16; REMOVED LDW280M16138-11(1); VIEW G-G REVISED PICTURE OF CABLES; VIEW B-B REVISED PICTURE OF CABLES, REMOVED PICTURE OF CLAMP & ADDED PICTURE OF CLAMP; VIEW LKG AFT-Z27 BHD ADD SEPARATION CODES A-CE1A, A-CE1B; VIEW LKG OUTBD R/H ADDED SEPARATION CODES A-CE1A, A-CE1B, E-CS1B & REVISED PICTURE; VIEW S-S REMOVED PICTURE OF 20A156, 20A157 & 20A158; ADDED NOTE 16						
	6	4	2C 5C 6A					EO B6 LCD 1594	VIEW LKG OUTBD L/S ADDED E7031, E7032 & IN VIEW LKG AFT-Z27 BHD P101A WAS J101; J88 WAS J62; ADDED E7301, E7302 & 52847 TO P714 (GSE CONN ON PCA)(REF)						
	7	4	8D 11C			✓		EO B7 LCD 1855	ON-1 INSTL ADDED P784, SPLICES E8099(REF), E8101 (REF) THRU E8107(REF), 52653(REF), 52525(REF)						
	8	4	2A				✓	EO B8	ON-1 52847(REF) WAS 52875						
	9	4 3.01	11A					EO B9 LCD 1078	ADDED SEE NOTE 15 ADDED NOTE 15						
	10	4	5A 5C					EO B10	ON-1 ADDED E2280, E1730, E5412, GT-11J-BR08-12(2) WAS (1).						
C	1	2.00 4	6C					EO C1 LCD 2018	ON-1 INSTL 6010677 WAS 6010670						

FOR CONTINUATION OF REVISIONS SEE SHEET ______

GRUMMAN AIRCRAFT ENGRG CORP, BETHPAGE, L. I., NEW YORK

SIZE	CODE IDENT NO.		
B	26512	LDW280-52358	C
SCALE NONE			SHEET 1.12

ENG 77.3 5-65

01

NAS 9-1100

CL	QTY PER ASSEMBLY					-1	CODE IDENT	PART NO.	I&T	NOMENCLATURE OR DESCRIPTION	MATERIAL	GOVT SPEC	COML SPEC	STOCK SIZE	PROCESS SYM	FINISH NO.	ZONE
C						1		LSC390-8-3	E	CAP	SEE NOTE 13						
C						2		LSC380-00602-13	E	ADAPTER	SEE NOTE 13						
C																	
↑																	
						3		MS2162583T	E	GROMMET	STD PART						
						2		NAS43DD3-64	↑	SPACER	STD PART						
						1		NAS43DD3-48		SPACER	STD PART						
						NOTE 14		MS2099NC32		WIRE, LOCK	STD PART						
						↑		MS21266		GROMMET	↑						
								AN960D		WASHER							
								MS21042L		NUT	↓						
								MS21919WDH		CLAMP	STD PART						
								GT835C		TAPE, INSUL	GRUMMAN STD						
								GT835K		TAPE, LACING	↑						
								GS830G		SLEEVE							
						↓		GC500S	↓	CLAMP, CUSHIONED	↓						
↓						NOTE 14		GB511J	E	BOLT	GRUMMAN STD						
C																	

SYM OR NO.	PROCESS OR FINISH	GRUMMAN SPEC OR MILITARY SPEC	SYM OR NO.	PROCESS OR FINISH	GRUMMAN SPEC OR MILITARY SPEC	SYM OR NO.	PROCESS OR FINISH	GRUMMAN SPEC OR MILITARY SPEC

I & T: IDENTIFICATION AND TRACEABILITY IN ACCORDANCE WITH : NONE

GRUMMAN AIRCRAFT ENGRG CORP, BETHPAGE, L. I., NEW YORK

SIZE	CODE IDENT NO.		
B	26512	LDW280-52358	C

SCALE NONE

SHEET 2.01

ENG 77.2 7-65

01

NAS 9-1100

LDW280-52358 D

								LM	LDW280-52001	LM-2(32)	1
MODEL OR END ITEM	NEXT ASSY	MODULE OR SER NO.	REQD PER MODULE OR END ITEM	MODEL OR END ITEM	NEXT ASSY	MODULE OR SER NO.	REQD PER MODULE OR END ITEM	MODEL OR END ITEM	NEXT ASSY	MODULE OR SER NO.	REQD PER MODULE OR END ITEM
PART NO.		GAEC SCH NO.		PART NO.		GAEC SCH NO.		PART NO. LDW280-52358-1		GAEC SCH NO. 30	

MAY BE REDRAWN ON PRODUCTION FORMAT (5)

SH REV STATUS: FOR DESCRIPTION OF REV SEE SUBQ SH

SHEET	1.00	1.10	1.11	2.00	2.01		3.00	3.01	
REV	D	A	A	D	C		A	B	
SHEET	4.00	5.00		1.12	1.13	1.14			
REV	D	D		C	D	D			
SHEET									
REV									

LAST SECT LTR USED	U-U	GRUMMAN REL INFO D	
		PRIM NO.	4K(001)
LAST DASH NO. USED	-1	420	MA-1D-2/16/8

UNLESS OTHERWISE SPECIFIED DIMENSIONS ARE IN INCHES.
TOLERANCE UNLESS SPECIFIED
FRACTIONS - DECIMALS – ANGLES

ORIG DWG AUTH
DETAIL SPEC REQUIREMENT
CLASS II ENGRG CHANGE
CLASS I ENGRG CHANGE

CONTRACT NO. NAS 9-1100
LINE ITEM 080
DOCUMENTATION TYPE II

DRAWN BY	Joe Cubifita	WEIGHTS	Kovach
LAYOUT BY	L. BALDASSIN 9/22	THERMAL	10-8
CHECKED BY	JW		
GR LDR	9/22/66		
VDI	9/22		
STRUCT	9-22-66	PROJ ENGR	R.M. Carbee 9-29
STRUCT	HILDERMAN 9/28	REL GROUP	10/17/66

GRUMMAN AIRCRAFT ENGRG CORP
BETHPAGE, L. I., NEW YORK

LINES INSTALLATION ELECTRONIC
ASCENT STAGE~MIDSECT~INTERNAL

SIZE	CODE IDENT NO.		
B	26512	LDW280-52358	D

SCALE HALF NONE
SHEET 1.00 OF 14

CDR 9-10-66

7.1 12-65

01

NAS 9-1100

REVISIONS

CHANGE LTR	ITEM NO.	SHEET NO.	ZONE	GRUMMAN INFO ONLY PRIOR TO EVENT	DET SPEC	CLASS I	CLASS II	ENGRG ORDER	DESCRIPTION	EFFECTIVITY	DISPOSITION OF EXISTING PARTS		CHANGED BY AND DATE	ENGRG APPD	GOVT APPD
											REWORK	SCRAP			
C	2	4	5B				✓	EOC2 LCD1078	ON-1 INSTL REROUTED EMI "A" CABLES	LM-2(32)	✓		K. NELSON 11-3-67		
	3	4	8D			✓		EOC3 LCD 1855	ON-1 INSTL ADDED SPLICE E8118 REF., & CABLE ASSY CALLOUT 52653(REF)						
	4	5	21C					EOC4 LCD1758	ON-1 C/A V28-420107 WAS V28-420101, V28-420108 WAS V28-420102						
	5	4,5	10A 12B				✓	EOC5	ON-1 ADDED E8252, E8253, E8254 SPLICES (REF)		NOT	REQD			
	6	4	11C	B		✓		EOC6 LCD 2223 CCA 745	ON-1 INSTL E.O. IS A PARTIAL REV OF EOB7. DELETED SPLICES E8102 THRU E8107 & PIG-TAILS (REF) AS SHOWN		✓				
	7	2.00 5.00	21D	E				EO C7 LCD 2223 CCA 745	DELETED V28-420107(1), V28-420108(1) (ON-1 INSTL) DELETED VIEW LKG OUTBD - DOCKING TUNNEL						
	8	1.00						BrC	LAST SECT LTR USED U-U WAS T-T; ADDED SH 1.12 & 1.13; SH 1 OF 11 WAS SH 1 OF 9		NOT	REQD			
									ADDED: SH 1.14, SH 1.00 OF 14 WAS SH 1.00 OF 13						
D	1	4.00 2.00	4B				✓	EO D1	ON-1 INSTL LDW 280-16030-27(2) WAS LDW 280-16030-25(2)	LM-2(32)	✓		R. CARLOCK 2/11/68		
	2	5.00	12B					EO D2	ON-1 INSTL DELETED: BONDING DIM (7± 1 TYP) ADDED: (TYP 9 PLACES) TO STRUCTURAL BOND.						
	3	2.00			✓			EO D3	ON-1 INSTL ADDED: LDW 280-16083-1	NOT REQ'D	NOT	REQ'D			
	4	2.00						EO D4	ON-1 INSTL DELETED: LDW 280M16138-11						
	5	4.00	10C 8D				✓	EO D5	ON-1 INSTL GA3661D(REF) WAS GA 3661A(REF), GA3662D(REF) WAS GA3662A(REF), GA3663D(REF) WAS GA3663A(REF).	LM-2(32)					
	6	4.00	10D					EO D6	ON-1 INSTL LDW 390-52400 REROUTED & SPLICE LOCATION REVISED LOCALLY.		✓				
	7	4.00	11D					EO D7	ON-1 INSTL REROUTED CABLE ASSY'S - 21798(REF) & -52653(REF). RELOCATED SPLICE (E8099)(REF).						
	8	4.00	10B					EO D8	ON-1 INSTL REROUTED XDUCER PIGTAILS & RELOCATED SPLICES E293(REF), E294(REF) & E295(REF).						

GRUMMAN AIRCRAFT ENGRG CORP, BETHPAGE, L. I., NEW YORK			
SIZE B	CODE IDENT NO. 26512	LDW280-52358	D
SCALE NONE		SHEET 1.13	

FOR CONTINUATION OF REVISIONS SEE SHEET ______

ENG 77.3 5-65

01 NAS 9-1100

REVISIONS

CHANGE LTR	ITEM NO.	SHEET NO.	ZONE	GRUMMAN INFO ONLY	DET SPEC	CLASS I	CLASS II	ENGRG ORDER	DESCRIPTION	EFFECTIVITY	DISPOSITION OF EXISTING PARTS REWORK	DISPOSITION OF EXISTING PARTS SCRAP	CHANGED BY AND DATE	ENGRG APPD	~~GOVT~~ APPD
D	9	4.00	10C				✓	EO D9	ON-1 INSTL REVISED PICTURE OF CABLE BREAKOUTS TO P768; P768 WAS J768.	LM-2(32)	✓		R. CARLOCK 2/11/68		
	10	4.00	10D 8D					EO D10	ON-1 INSTL REVISED PICTURE OF CABLE BREAKOUTS TO P750, P751, P752 & P763. DELETED: REF CALLOUT -52854. ADDED: REF CALLOUT 21664. P752 WAS J752, P-750 WAS J750, P15 WAS J15, P751 WAS J751, P763 WAS J763, P769 WAS J769 & P83 WAS J83.						

GRUMMAN AIRCRAFT ENGRG CORP, BETHPAGE, L. I., NEW YORK

SIZE	CODE IDENT NO.		
B	26512	LDW 280-52358	D
SCALE NONE			SHEET 1.14

FOR CONTINUATION OF REVISIONS SEE SHEET ______

ENG 77.3 5-66

01 NAS 9-1100

CL	QTY PER ASSEMBLY -1	CODE IDENT	PART NO.	I&T	NOMENCLATURE OR DESCRIPTION	MATERIAL	GOVT SPEC	COML SPEC	STOCK SIZE	PROCESS SYM	FINISH NO.	ZONE
C	1		6010677	E	HARNESS & CLAMPS	GFE						
	4		MS21042L4	E	NUT	STD PART						
	3		MS21042L08	E	NUT	STD PART						
	31		MS21042L04	E	NUT							
	8		AN960D416L	E	WASHER							
	16		AN960D8L	E	WASHER							
	64		AN960D4L	E	WASHER	STD PART						
	3		GT 11J-BR3-12	E	TERM INSTL	GRUMMAN STD						
	1		GT 11J-BR3-10	E	TERM INSTL							
	32		GT 11J-BR08-12	E	TERM INSTL							
	32		GB511J-04-2	E	BOLT							
	12		GB511J-08-2	E	BOLT							
	3		GB511J-08-1	E	BOLT	GRUMMAN STD						
	2		GB511J-4-4	E	BOLT	GRUM STD						
	2		GB511J-4-6	E	BOLT	GRUM STD						
	1		LDW280-16083-1	E	BRKT ASSY	SEE DWG						
	1		LDW280-16030-23	E	CLAMP ASSY	SEE DWG						
	1		LDW280-16030-21	E	CLAMP ASSY							
	2		LDW280-16030-27	E	CLAMP ASSY							
	1		LDW390-52014-1	E	AREA INSTL	SEE DWG						
C			LDW280-52358-1	E	LINES INSTL							

CL = CLEANLINESS LEVEL PER LSP-14-0011

SYM OR NO.	PROCESS OR FINISH	GRUMMAN SPEC OR MILITARY SPEC	SYM OR NO.	PROCESS OR FINISH	GRUMMAN SPEC OR MILITARY SPEC	SYM OR NO.	PROCESS OR FINISH	GRUMMAN SPEC OR MILITARY SPEC

I & T: IDENTIFICATION AND TRACEABILITY IN ACCORDANCE WITH : NONE

GRUMMAN AIRCRAFT ENGRG CORP, BETHPAGE, L. I., NEW YORK

SIZE	CODE IDENT NO.		
B	26512	LDW280-52358	D
SCALE NONE		SHEET 2.00	

ENG 77.2 7-65

01

NAS 9-1100

10
9
8
11
D
C
B
A
52801 (REF)
21907 TO J38 PNL XVI (REF)
52811 TO J56 PNL I (REF)
A-CEIA (B5)
GB0204T (REF)
E4898
E4897
52400 (REF)
52523 (REF)
21520 (REF)
52751 (REF)
GA3661D
LDW 360-21283 (REF)
SPLICE E8095 REF
E-CSIB
21520 (REF)
52523 (REF)
52525, E900, E988, E989 (REF)
21662 TO J41 PNL II
21663 TO J41 PNL II
21664 TO J41 PNL II
21752 TO J38 PNL XVI
21765 TO J64 PNL VIII
21798
52801
52811 TO J56 PNL I
52812 TO J57 PNL II
21825 TO J76 PNL XII
52751 TO J39 PNL XI
J87 PNL XII (REF)
52771 (REF)
52653 TO J148 PNL XV XVI (REF)
21825 TO P900 DSEA (REF)
21799 (REF)
52801 (REF)
21662 TO J37 PNL I (REF)
21664 TO J41 PNL II (REF)
52699 TO J58 PNL III (REF)
21766 TO J63 PNL VI (REF)
21799 (REF)
52801 (REF)
52811 TO J56 PNL I (REF)
21664 TO J41 PNL II (REF)
52699 TO J58 PNL III (REF)
21765 TO J64 PNL VIII (REF)
21829 TO P900 DSEA (REF)
52812 TO J57 PNL II (REF)
52801 (REF)
52525 TO FRONT HATCH 7MT3-GF3592P (REF)
21699 TO J58 PNL III (REF)
21752 TO J38 PNL XVI (REF)
21765 TO J64 PNL VIII (REF)
21799 (REF)
52801 (REF)
28813 TO J87 PNL XII & FRONT HATCH (REF)
52822 TO J87 PNL XII (REF)
52525, E991 (REF)
21664 (REF)
52525 (REF)
21664 (REF)
52525 (REF)
28813 (REF)
P752
P751
P763
J764 GSE
GT11J-BR08-12 (SEE NOTES 3&4)
E2245(4)
E2912(1)
E4275(1) N4 (REF)
E2245(1)
21752 (REF)
21664
52751
21520
52523 (REF)
GT11J-BR08-12 (SEE NOTES 3&4)
E4639 N4 (REF)
LDW 360-21283 (REF)
GA 3662D (REF)
GA 3663D (REF)
P768 (REF)
SPLICE E534 E552 (REF)
P769
P83
P15
52525 (REF)
TO P761 (REF)
A, C & A-CEIA
SPLICE E4839 E4840 E3227 E3228 E540 (REF)
52853 (REF)
52400 (REF)
SPLICE E8095 REF
21798 (REF)
52653 (REF)
E3484(3) N4 (REF)
GT11J-BR08-12
(SEE NOTES 3&4)
(REF) 21798
(REF) 52653
J86
SYSTEM ENG. UMBILICAL
GB511J-04-2 (4)
AN960D4L (8)
MS21042L04 (4)
GB511J-04-2 (4)
AN960D4L (8)
MS21042L04 (4)
E3485(1) N4 (REF)
E4405(1) N4 (REF)
GT11J-BR08-12 (REF)
SEE NOTES 3&4
COMMANDER'S UMBILICAL (REF)
J85
21799, 21907, 28813, 52848 (REF) 52854 (REF)
CABIN FANS & HEAT EXCHANGER
51532 (REF)
SPLICE E605 E606 E607 E608 E609 E610 E611 E612 REF
SPLICE E436 E437 E438 E426 E429 E430 REF
52525 (REF)
52854
21799
51532 (REF)
J-775 (GSE)
P
U
N
LSC330-190 (REF)
LDW 280-52353 (REF)
LSC 330-8-3(1) J775 (REF)
7RT9 (GF4541T) (REF)
X DUCER PIGTAILS (REF)
SPLICE E293 E294 E295 (REF)
52853 (REF)
52847
GF9996U
7A3
7L1
7E2
LDW280-52353 (REF)
21907 (REF)
28813 (REF)
21848 (REF)
LDW 360-21265 (REF)
USE EXIST HARDWARE
ZONE 12A SH 5
ENGINE COVER
SEE VIEW T-T ZONE 1 & SH 5
USE EXISTING HARDWARE DOUBLE CLAMPED WITH PLUMBING
21907 (REF)
PRI WATER SW (REF) 7S4 (REF)
E4837(1) N4 (REF)
GT11J-BR08-12
(SEE NOTES 3&4)
7RT-3 (REF)
GF2871T (REF)
LDW 360-21265 (REF)
LDW 280-52353 (REF)
7RT-5 (REF)
GF2621T (REF)
LDW 360-21265 (REF)
SEE NOTE #15
7MT11 GF2021P (REF)
P358
J766
52400 (REF)
SPLICE E537 (REF) E538 (REF)
E8252 (REF)
E8253 (REF)
E8254 (REF)
20RT18 (REF)
SPLICE E4900 (REF) E4899 (REF)
E
H, G
A, C & A-CEIB
SPLICE E441 E442 E443 E444 (REF)
52525 (REF)
28813
21663
52853
52854
52847
52400
52848
21662
21516 (REF)
SPLICE E274 E275 E276 E277 (REF)
E2865 N4 (REF)
GT11J-BR08-12
(SEE NOTES 3&4)
52847 (REF)
52853 (REF)
J1162
52525 (REF)
52699 (REF)
28813
GT11J-BR08-12
(SEE NOTES 3&4)
E2282(1) N4 (REF)
28813 (REF)
21765, 21764, 21799 (REF)
52801, 21825, 21798 (REF)
XMTR 'A'
SPLICE
E279 (REF) E280 (REF)
E281 (REF) E279 (REF)
52653 TO J148 (REF)
P1302
P9 & P945
GT11J-BR08-12
(SEE NOTES 3&4)
E4375(1) N4 (REF)
GT11J-BR08-12
(SEE NOTES 3&4)
E3563(2) N4 (REF)
E4728(2) N4 (REF)
GT11J-BR08-12
(SEE NOTES 3&4)
E4740(1)
E1650(1) N4 (REF)
E3566(2)
SPLICE E8101 (REF)
CABIN PRESS
7MT1
P33
ECS RELAY BOX
P750
21765 GSE
21652
21953
P1135
52699 (REF)
52525 (REF)
21766 (REF)
SPLICE E3791 E3792 (REF)
P15
21347 (REF)
P1136
GT11J-BR08-12
(SEE NOTES 3&4)
E3564 (1)
E594 (1)
E2506 (1) N4 (REF)
E3342 (1)
SPLICE E533 (REF)
21661 (REF)
52525 (REF)
52751 (REF)
52751 (REF)
21752
52525 (REF)
J-761
52653 (REF)
52525 (REF)
SPLICE E8118 (REF)
CABIN PRESSURE SWITCH
(LGC)
LEM GU
(REF) 28525
(REF) 52853
(REF) 52400
21799 (REF)
21516 (REF)
21907
28813
21799
52751
52847
21662
21663
52889
52854
21799
21662
52889 (REF)
A-CEIA
NAS43DD3-64 (2)
21516 (REF)
(PSA) POWER
A9
A4
A10
B3
B4
B5
B7
B9
C3
C5
C6
D5
D6
D7
D8
D9
D10
E7

VIEW LOOKING OUTB R.H. SIDE

01/03

NAS 9-1100

CODE IDENT NO.	DWG NO.	SHEET
26512	LDW 280-52358	4

FRAME 1 FRAME 2

XMTR "A"
XMTR "B"
XMTR "C"
XMTR "D"
VHF XMTR "E"
J1162
P944 P945
P947 P948
P955 P933
P938 P939
P941 P942
28813 (REF)
SEE VIEW LOOKING UP TOP HATCH SHS ZONE 16C
E361 E3612 (DOCKING SW 16511)
21660 (REF)
52458 (REF) 21879 (REF) 21580 (REF)
21653 (REF) 52580 (REF)
52580 (REF)
E&D RELAY BOX
21656 21939 21580 P1135
21941 (REF)
P358 P357 P356 P355 P354
21657 (REF)
VHF-UHF DIPLEXER
P1137
MULTIPLEXER
P1136
21947 (REF)
P359
21751 (REF) 21752 52325 (REF)
J-761
SPLICE E8118 (REF)
CABIN PRESSURE SWITCH
LSC 380-00602-13(2) (REF)
21942 (REF)
(LGC) LEM GUIDANCE COMPUTER
CLAMP "D" (SEE NOTE 8) MS16996-9(2)(REF)
21516 (REF) 21907 28813 21799 52751 52847 21662 52854 21799 21662 52689 (REF)
A-CEIA
(REF) CLAMP "C" MS16996-10 MS21045-C3 (REF) (SEE NOTE 8)
(CDU) CONTROL DATA UNIT
CLAMP "B" (SEE NOTE 8) MS16996-9(2)(REF)
(PSA) POWER & SERVO ASSY
CLAMP "A" (SEE NOTE 8) MS16996-9(2)(REF)
56P1 (REF)
56P2 (REF)
56P3 (REF)
56P4 (REF)
SCA SIGNAL CONDITIONER ASSY
PSA
52689 52848 (REF) 21516 51401 52847 21662 21663 52400 (REF)
CLAMP "H" (SEE NOTE 8) GB511J-08-2(2) AN960D8L(2)
CLAMP "G" (SEE NOTE 8) GB511J-08-2(2) AN960D8L(2)
GT11J-BR3-10 (SEE NOTE 3&4) E6436 (1) (MIT GRD)
CLAMP "F" (SEE NOTE 8) GB511J-08-2(2)
CLAMP "E" (SEE NOTE 8) GB511J-08-2 (2) AN960D8L(2)
"MIT"
GFE SUPPLIED HARNESS 6010677 (1) (SEE NOTE 8)
P215A P217 P223A P217A P222 P219 P220 P221
GT11J-BR08-12 (SEE NOTES 3&4) E4843 (1) E1340 (2) E4942 (1) N4 (REF)
GT11J-BR08-12 (SEE NOTES 3&4) E1324 (4) N4 (REF)
GT11J-BR08-12 (SEE NOTES 3&4) E1306 (2) E1309 (2) N4 (REF)
21757 TO J70 (REF)
21767 (REF) TO J219, J603, J56, J58, J741, J88
P101A 52883 (REF) TO E7301, E7302
GB511J-04-2(16) AN960D4L (32) MS21042L04 (16) (TYP CONN MTG)
21762 (REF) TO J57 J69 J231 J163 J747 J58 J743 J741
52852 TO P917 (SIG COND) (REF)
E4809(1) E3118(1) E3115(1) E1909(1) N4 (REF)
GT11J-BR08-12 (SEE NOTES 3&4)
GT11J-BR08-12 (SEE NOTES 3&4) E4593 (4) N4 (REF)
GT11J-BR08-12 (SEE NOTES 3&4) E2707 (1) E2747 (2) N4 (REF)
21758 TO P229 (CABIN DSKY PANEL) (REF)
21762 TO J220 (REF)
21516 (REF) 21662 (REF)
GT11J-BR08-12 (SEE NOTES 3&4) E4847 (1) E3868 (2) N4 (REF)
E1319(1) E3876(1) E3877(1) E4648(1) N4 (REF)
GT11J-BR08-12 (SEE NOTES 3&4)
GB511J-04-2 (4) AN960D4L (8) MS21042L04 (4)
P-163
21785 TO J710 (CABIN PRA) 21903 TO P1412 (CABIN LMP) 52788 TO J782 (CABIN PCA) 21900 21901 (REF)
A-CEIB
52400 (REF) 21516 TO P163 (REF)
P102A P903A P905A P109A P106A P112A P111A
21939 TO P914 (SIG COND) (REF) 21939 TO P783, P957, P1580 (REF) 21851 TO P914 (SIG COND) (REF) 21581 TO P933 (PWR CONT BOX) (REF) 52580 TO P932 (REF) 21852 TO P915 (REF)
52400 (REF) 52847 TO P910 (SIG COND) (REF) 52771 (REF) LDW280-16030-27(2)
GB511J-08-2(4) AN960D8L(4)
52848 TO P911 (SIG COND) (REF) 52847 TO P910 (SIG COND) (REF) 31854 21853 TO P1557 (20A80 AMP) (REF) P1556 (20A79 AMP) (REF) P1555 (20A78 AMP) (REF)
GT11J-BR08-12 (SEE NOTES 3&4) E3818 (1) E4647 (1) E4846 (1) E5289 (1) N4 (REF)
52853 TO P916 (REF) P1311
52854 TO P917
52847 P1551 P1526 P1525 P1524 P1552 P1314 P910 (REF)
E2281(2) N4 (REF) GT11J-BR08-12 (SEE NOTES 3&4)
52848 TO P911 (SIG COND) 52847 TO P910 (SIG COND) 21581 TO P933 (PWR CONT BOX) 21852 TO P915 52849 TO P912 (SIG COND) 52853 TO P1557 (20A80 AMP) P1556 (20A79 AMP) P1555 (20A78 AMP) (REF)
52847 TO P714 (GSE CONN ON PCA) (REF)
52854 (REF) 52847 TO P910 (SIG COND) (REF) 21852 TO P915 (REF) 52400 (REF) 52849 TO P912 (SIG COND) (REF) 21879 TO J1160 (DUAL FEED COUPLER) (REF)
A-CEIB
-Z27.0 -Z22.0 -Z10.25 Z-0
KEYWAY FWD
J10
G80205T (REF)
28575 TO J99, P143A (REF)
21576 TO J99, P144A
A-CEIB
C-CSIB
E-CSIA
52400 (REF) 51401
D
POLARIZING KEYWAYS (REF)
PBW "A"
PBW "B"
20A140 20A142 20A144 20A141 20A143 20A145
GT11J-BR08-12 (SEE NOTES 3&4) E3084 (1) E3076 (1) E3071 (1) E3007 (1) N4 (REF)
A-CEIB
GT11J-BR08-12 SEE NOTES 3&4 E3119 (1) E4762 (1) E2280 (1) N4 REF
C H G J A B F E
COAX
PBW "C"
CBW "D"
P1532 VIB COMM "H"
P1531 VIB COMM "I"
GT11J-BR3-12(3) E2513(6) N3 (REF)
LDW280-16083 (REF)
P910 P911 P912 P913 P914 P915 P916 P917 SIGNAL COND 20A7
GT11J-BR08-12 (SEE NOTES 3&4) E5288(1) N4 (REF)
GB511J-4-4(1) AN960D416L(2) TYP 2 PLACES MS21042L4(1)
52788 (REF)
52847 (REF) 52883 (REF)
LDW390-52400 (REF) -51401 (REF)
P966 P967 P968 P969 P991 LOW LEVEL COMM "D"
LOW LEVEL COMM "A"
LDW390-52400 (REF) -51401
20A37 20A28 20A40 P-929 20A32 20A33 20A36
21785 (REF) 52847 (REF)
LDW390-52400 -51401 (REF)
GT11J-BR08-12 (SEE NOTES) E1670(1) E1673(1) E1676(1) E16960(1) N4 (REF)
P929 P928 P927 P926 P925 P924 P923 P922 P921 P920 P919 P918
E1730(1) E5412(1) E1668(1) E1732(1) E1733(1) N4 (REF)
GT11J-BR08-12(2) (SEE NOTES 3&4) (REF)
S&T "B" 20A2
S&T "A" 20A1
20A27
H,G E A,C & A-CEIB
Z=0
GT11J-B... E4204 E4205
CODE IDENT NO. 26512 DWG NO. LDW 280-52358 SHEET 4
FRAME 3 FRAME 4
-52358 SHEET 4 FRAME FRAME 2
8 7 6 5 4 3

VIEW LOOKING AFT -Z27 BHD

VIEW LOOKING OUTBD L.H.SIDE LDW 280-52358-1 INSTL

02/03

NAS 9-1100

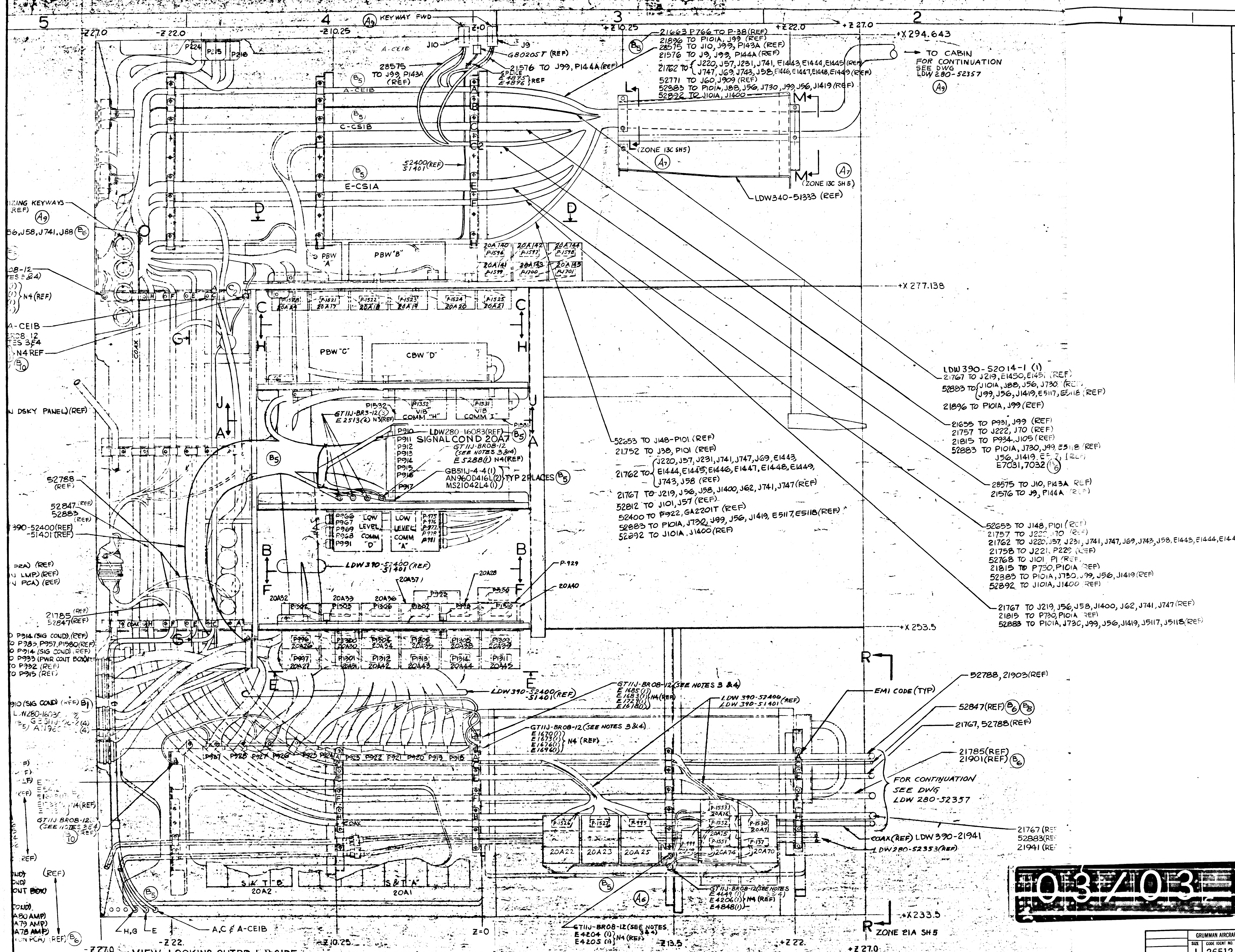
5
4
3
2
-Z27.0
-Z22.0
-Z10.25
KEYWAY FWD
Z=0
+Z10.25
+Z22.0
+Z27.0
+X294.643
TO CABIN
FOR CONTINUATION
SEE DWG
LDW 280-52357
A9
21663 P766 TO P-38 (REF)
21896 TO P101A, J99 (REF)
28575 TO J10, J99, P143A (REF)
21576 TO J9, J99, P144A (REF)
21762 TO J220, J57, J231, J741, E1443, E1444, E1445 (REF)
J747, J69, J743, J58, E1446, E1447, E1448, E1449 (REF)
52771 TO J60, J909 (REF)
52883 TO P101A, J88, J56, J730, J99, J56, J1419 (REF)
52892 TO J101A, J1400
B5
J10
J9
GB0205T (REF)
21576 TO J99, P144A (REF)
SPLICE
E4897
E4896 REF
28575
TO J99, P143A
(REF)
P224
P215
P216
A-CEIB
C-CSIB
E-CSIA
52400 (REF)
51401 (REF)
L
M
(ZONE 13C SH5)
A7
LDW340-51333 (REF)
D
PBW "A"
PBW "B"
20A140 P1596
20A142 P1597
20A144 P1598
20A141 P1599
20A143 P1700
20A145 P1701
+X 277.138
P1528 20A44
P1521 20A17
P1522 20A18
P1523 20A19
P1524 20A20
P1525 20A21
C
H
G
J
A
B
F
E
R
PBW "C"
CBW "D"
COAX
P1532
P1352 VIB COMM "H"
P1531 VIB COMM "I"
P1531
GT11J-BR3-12 (3)
E2513 (4) N3 (REF)
P910
P911
P912
P913
P914
P915
P916
P917
LDW280-16083 (REF)
SIGNAL COND 20A7
GT11J-BR08-12
(SEE NOTES 3 & 4)
E5288 (1) N4 (REF)
GB511J-4-4 (1)
AN960D416L (2)
MS21042L4 (1)
TYP 2 PLACES
P966
P967
P969
P968
P991
LOW LEVEL COMM "D"
LOW LEVEL COMM "A"
P975
P976
P977
P978
P981
LDW390-52400 (REF)
-51401
20A37
20A28
P-929
20A40
20A32
20A33
20A36
P1504
P1505
P1506
P1507
P922
P1508
P1510
P996 20A26
P1300 20A30
P1302 20A34
P1308 20A38
P1309 20A39
P997 20A27
P1301 20A31
P1312 20A42
P1313 20A43
P1314 20A44
P1311 20A45
LDW 390-52400
-51401 (REF)
IZING KEYWAYS
(REF)
56, J58, J741, J88
08-12
TES 3 & 4)
N4 (REF)
A-CEIB
R08-12
TES 3 & 4
N4 REF
N DSKY PANEL) (REF)
52788
(REF)
52847 (REF)
52883 (REF)
390-52400 (REF)
-51401 (REF)
21785 (REF)
52847 (REF)
P314 (SIG COND) (REF)
P783, P957, P1580 (REF)
P914 (SIG COND) (REF)
P933 (PWR CONT BOX) (REF)
P932 (REF)
P915 (REF)
910 (SIG COND) (REF)
LDW280-16083
GT11J-BR08-12
E4649
E4206
E4848
LDW 390-52400
LDW 390-51401 (REF)
LDW390-52014-1 (1)
21767 TO J219, E1450, E1451 (REF)
52883 TO J101A, J88, J56, J730 (REF)
J99, J56, J1419, E5117, E5118 (REF)
21896 TO P101A, J99 (REF)
21655 TO P931, J99 (REF)
21757 TO J222, J70 (REF)
21815 TO P934, J105 (REF)
52883 TO P101A, J730, J99, E5118 (REF)
J56, J1419, E5117, (REF)
E7031, 7032
28575 TO J10, P143A (REF)
21576 TO J9, P144A (REF)
52653 TO J148-P101 (REF)
21752 TO J38, P101 (REF)
21762 TO J220, J57, J231, J741, J747, J69, E1443,
E1444, E1445, E1446, E1447, E1448, E1449,
J743, J58 (REF)
21767 TO J219, J56, J58, J1400, J62, J741, J747 (REF)
52812 TO J101, J57 (REF)
52400 TO P922, GA2201T (REF)
52883 TO P101A, J730, J99, J56, J1419, E5117, E5118 (REF)
52892 TO J101A, J1400 (REF)
52653 TO J148, P101 (REF)
21757 TO J222, J70 (REF)
21762 TO J220, J57, J231, J741, J747, J69, J743, J58, E1443, E1444, E1445 THRU E1449 (REF)
21758 TO J221, P229 (REF)
52768 TO J101, P1 (REF)
21815 TO P730, P101A (REF)
52383 TO P101A, J730, J99, J56, J1419 (REF)
52892 TO J101A, J1400 (REF)
21767 TO J219, J56, J58, J1400, J62, J741, J747 (REF)
21815 TO P730, P101A (REF)
52883 TO P101A, J730, J99, J56, J1419, J5117, J5118 (REF)
+X 253.5
GT11J-BR08-12 (SEE NOTES 3 & 4)
E1685 (1)
E1683 (1)
E1729 (1)
E1618 (1)
N4 (REF)
GT11J-BR08-12 (SEE NOTES 3 & 4)
E1670 (1)
E1673 (1)
E1676 (1)
E1696 (1)
N4 (REF)
LDW 390-52400
LDW 390-51401 (REF)
EMI CODE (TYP)
52788, 21903 (REF)
52847 (REF)
B6
B8
21767, 52788 (REF)
21785 (REF)
21901 (REF)
FOR CONTINUATION
SEE DWG
LDW 280-52357
COAX (REF) LDW 390-21941
LDW 280-52353 (REF)
21767 (REF)
52883 (REF)
21941 (REF)
P987
P926
P927
P928
P925
P924
P923
P922
P921
P920
P919
P918
P-1526
P-1527
P-995
P-999
P-1553
P-1552
P-1530 20A7
20A75
P-1551
P-137
20A22
20A23
20A25
20A74
20A70
S&T B 20A2
S&T A 20A1
GT11J-BR08-12 (SEE NOTES 3 & 4)
E4649 (1)
E4206 (1)
E4848 (1)
N4 (REF)
GT11J-BR08-12 (SEE NOTES 3 & 4)
E4204 (1)
E4205 (1)
N4 (REF)
B5
A6
H, G
E
A, C & A-CEIB
ZONE 21A SH5
+X233.5
-Z27.0
-Z22.
-Z10.25
Z=0
-Z13.5
+Z22.
+Z27.0
FRAME 3
FRAME 4

VIEW LOOKING OUTBD L.H.SIDE
LDW 280-52358-1 INSTL

CODE IDENT NO.	NO.	SHEET
26512	LDW280-52358	4

MANUFACTURING OPERATIONS
UNLESS OTHERWISE SPECIFIED
NOTES CHECKED ✓ APPLY TO THIS DWG.

- PART NUMBER AND ALL OTHER MARKINGS IN REGION MARKED ▭ USE BOTH SIDES IF NECESSARY.
- FILLET AND INSIDE CORNER RADII TOLERANCES
  - .016R TO .062R ± .010
  - .063R TO .250R ± .015
  - OVER .250R ± .030
- DEPTH SHOWN FOR TAPPED HOLES IS FULL THDS. 2-3 IMP THDS. BEYOND PERMISSIBLE.
- EXTERNAL THREAD LENGTH SHOWN INCLUDES 2 IMPERFECT THREADS MAX.
- DO NOT CADMIUM PLATE & PAINT HOLES OR SURFACES MARKED WITH DOUBLE ASTERISK.
- MISMATCH STEP OF ± .005 PERMISSIBLE DUE TO CHANGE OF CUTTERS AT INSIDE INTERSECTING SURFACES.
- DIAMETERS MARKED MUST BE CONCENTRIC WITHIN FULL INDICATOR READING
- HOLES MUST BE KEPT FREE OF CHROME PLATING SOLUTION.
- ALL DIMENSIONS SHOWN TO BE MET AFTER CADMIUM PLATING. THICKNESS OF PLATE .0003 MIN. TO .0005 MAX. MIN. THICKNESS TO BE .0002 ON THREADED AREAS. NO ALLOWANCE FOR PLATING IN HOLES
- 125 SURFACE ROUGHNESS INCLUDING REAMED HOLES PER MIL-STD-10
- 200 FOR ALL DRILLED HOLES
- REMOVE ALL BURRS. BREAK ALL EDGES .015-.031
- INSPECTION INFORMATION MINIMUM PERMISSIBLE AVERAGE EDGE DISTANCE MARKED IS
- SYMBOL √ DENOTES SURFACE TO BE MACHINED
- UNLESS OTHERWISE SPECIFIED TOLERANCE ON FLANGES IS ± 1/32
- LENGTHS OF AN, NAS & MS AL ALY RIVETS SHORTER THAN 1 INCH ARE NOT SPECIFIED.
- TOLERANCE ON LOFTED DELINEATIONS IS

DWG SIZE 34 X 118
D
C
B
A
PRINTING INFO ONLY
FULL SIZE SHEET AREA (36 X 120) = 32½ SQ. FT.
1/2 SIZE SHEET AREA (1/4 OF FULL) = 8 SQ. FT.
PRINT TRIM LINE
LDW280-52353 D
LDW280-52353 D

03/03

NAS 9-1100

GRUMMAN AIRCRAFT ENGRG CORP., BETHPAGE, L. I., NEW YORK

SIZE	CODE IDENT NO.		
J	26512	LDW280-52358	D
MODEL OR END ITEM: LM	SCALE		SHEET 4

3FR

22 21 20 19 18

D

C

B

A

Ⓐ4 Ⓒ4 Ⓒ7

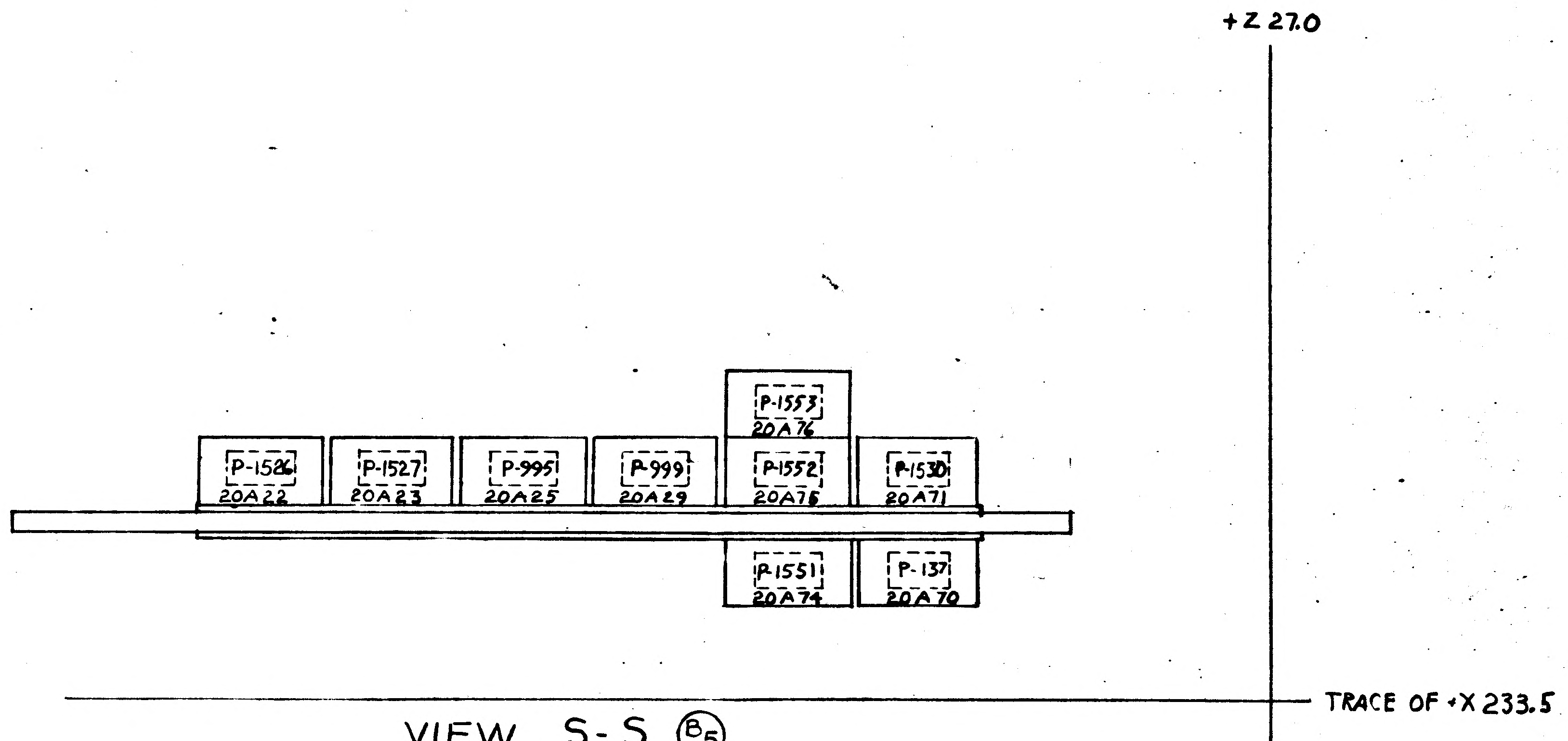
+Z 27.0
P-1526
20A22
P-1527
20A23
P-995
20A25
P-999
20A29
P-1553
20A76
P-1552
20A75
P-1530
20A71
P-1551
20A74
P-137
20A70
TRACE OF +X 233.5

VIEW S-S Ⓑ5
SCALE - HALF
ZONE 21A SH5
ROT. 35°30' CW

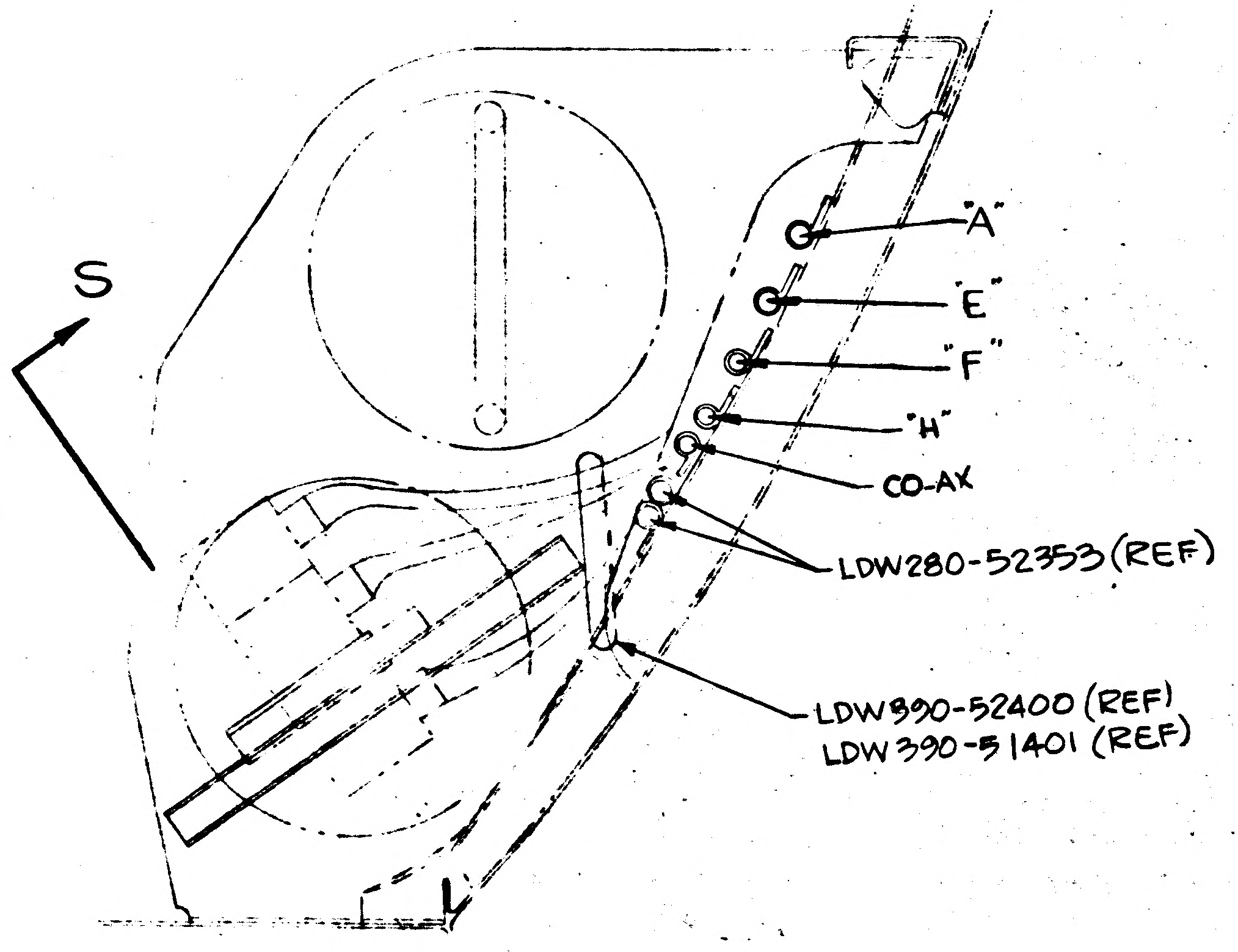
S
"A"
"E"
"F"
"H"
CO-AX
LDW280-52353 (REF)
LDW390-52400 (REF)
LDW390-51401 (REF)

VIEW R-R
SCALE~HALF
ZONE 2A SH4

S ZONE 22B SH5
Ⓐ6

01/03 NAS 9-1100

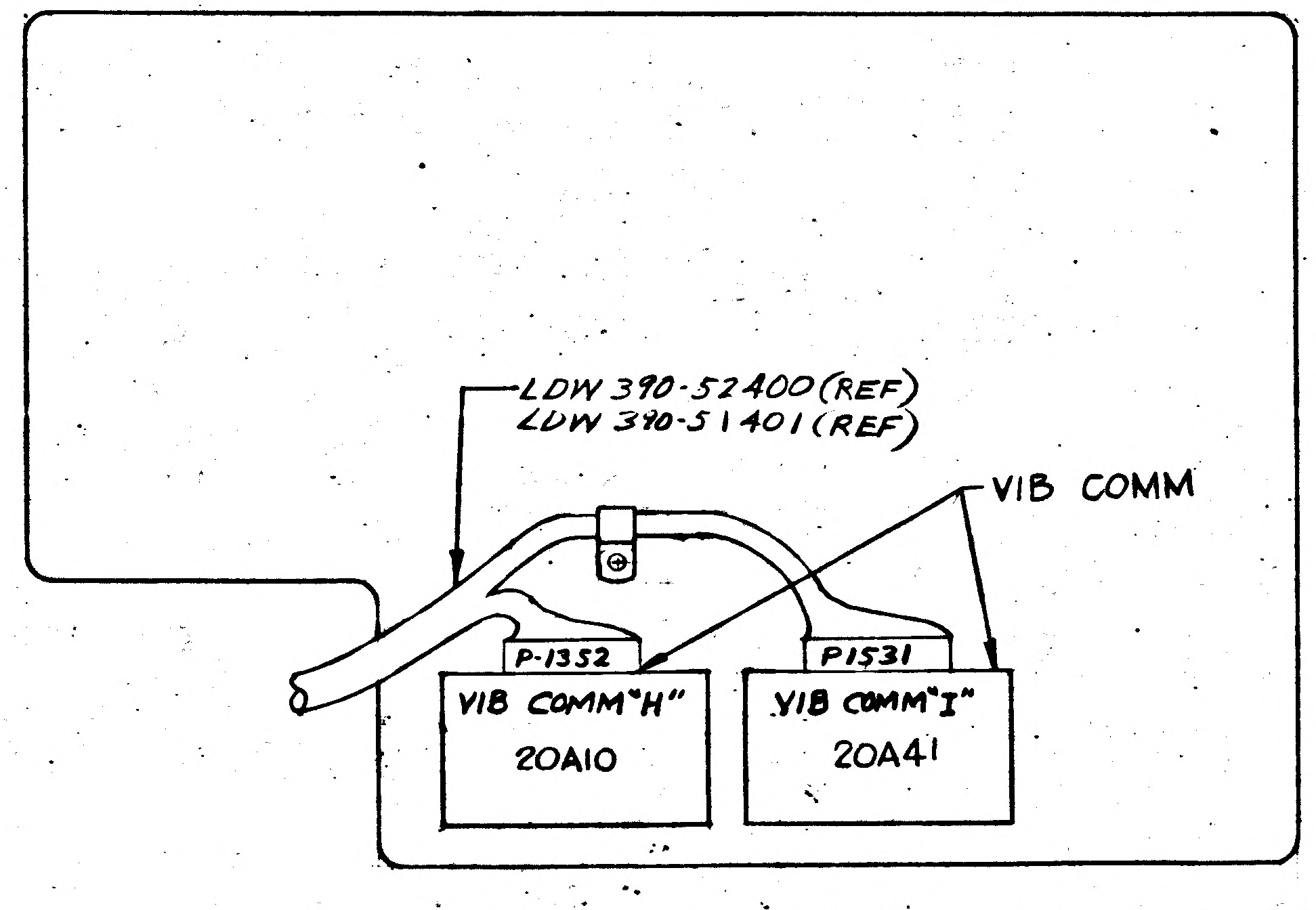
LDW 390-52400 (REF)
LDW 390-51401 (REF)
VIB COMM
P-1352
VIB COMM "H"
20A10
P1531
VIB COMM "I"
20A41

VIEW J-J
SCALE~HALF
ZONE 4C-SH4

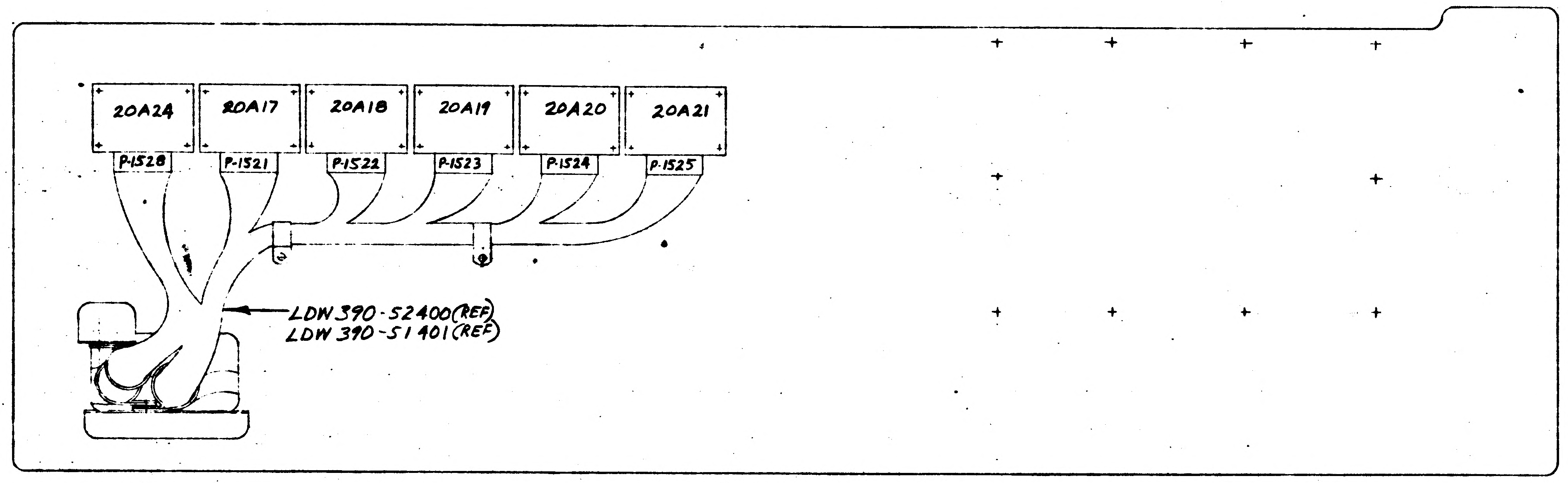
20A24
20A17
20A18
20A19
20A20
20A21
P-1528
P-1521
P-1522
P-1523
P-1524
P-1525
LDW 390-52400 (REF)
LDW 390-51401 (REF)

VIEW C-C
SCALE~HALF
ZONE 4D SH4

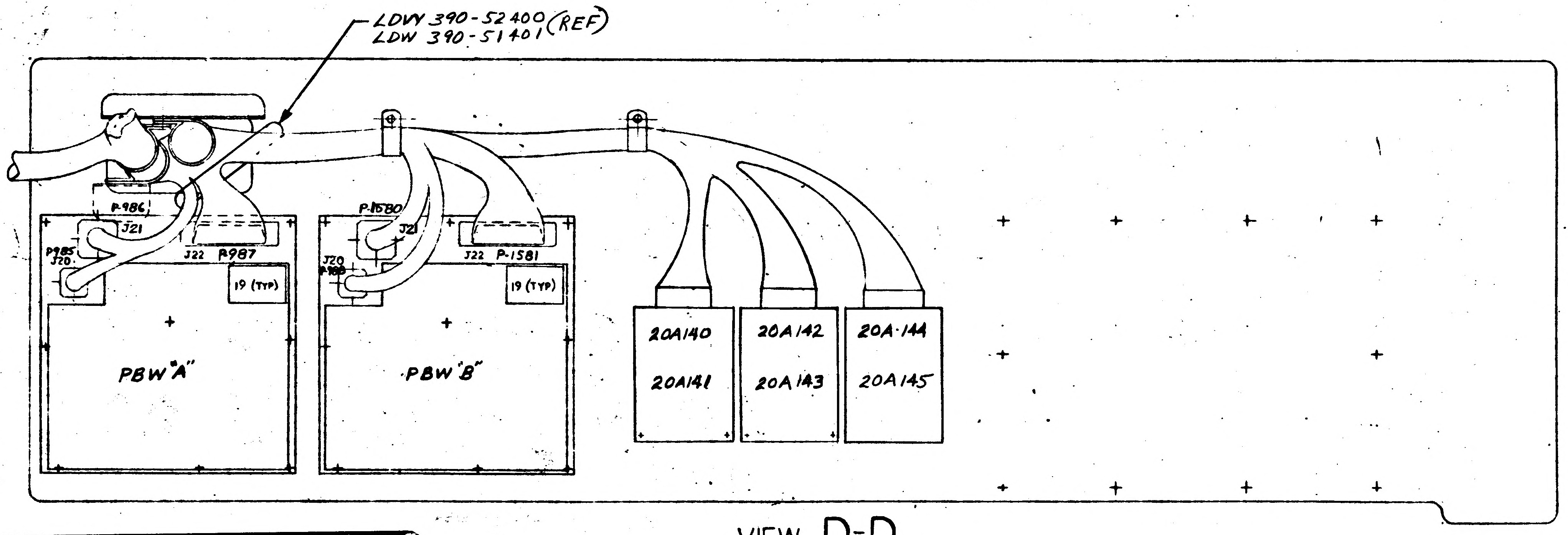
LDW 390-52400 (REF)
LDW 390-51401
P-986
J21
P985
J20
J22 P987
19 (TYP)
PBW "A"
P-1580
J21
J20
P-1581
J22 P-1581
19 (TYP)
PBW "B"
20A140
20A141
20A142
20A143
20A144
20A145

VIEW D-D
SCALE~HALF
ZONE 4D SH4

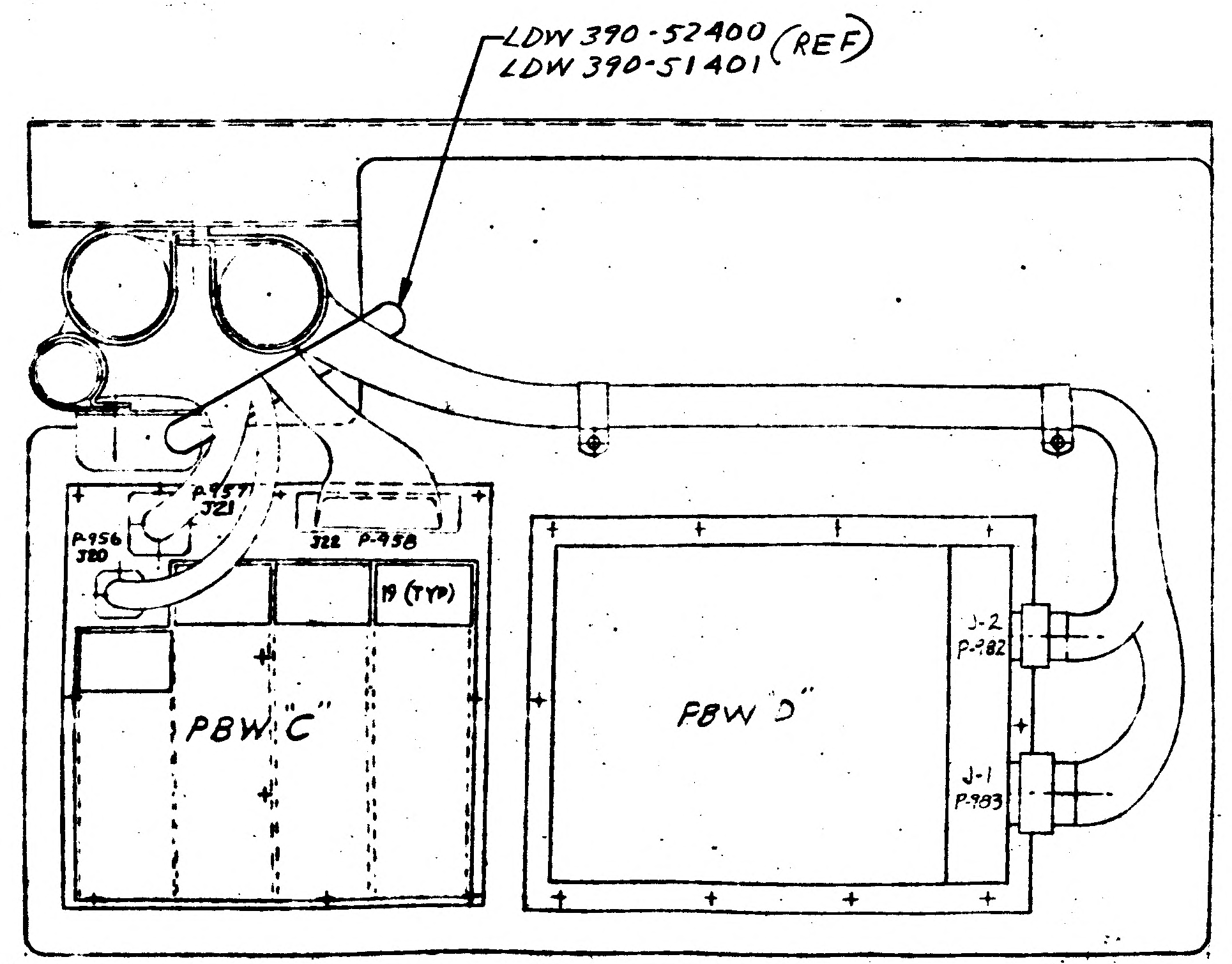
LDW 390-52400 (REF)
LDW 390-51401
P-957
J21
P-956
J20
J22 P-958
19 (TYP)
PBW "C"
PBW "D"
J-2
P-982
J-1
P-983

VIEW H-H
SCALE ~ HALF
ZONE 4C, SH 4

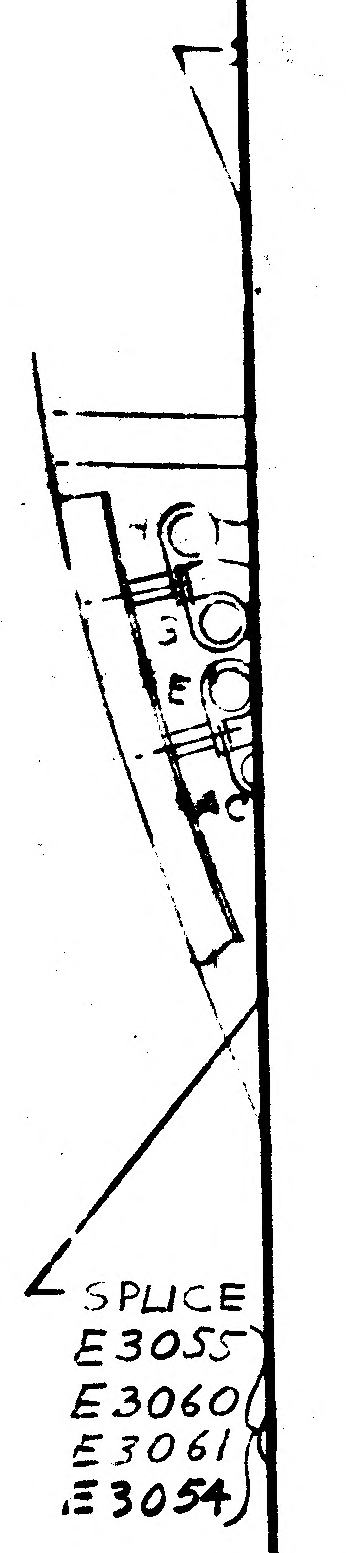
SPLICE
E3055
E3060
E3061
E3054

3/3

CODE IDENT NO.	DWG NO.	SHEET
26512	LDW280-52358	5

FRAME 1 FRAME 2

22 21 20 19 18

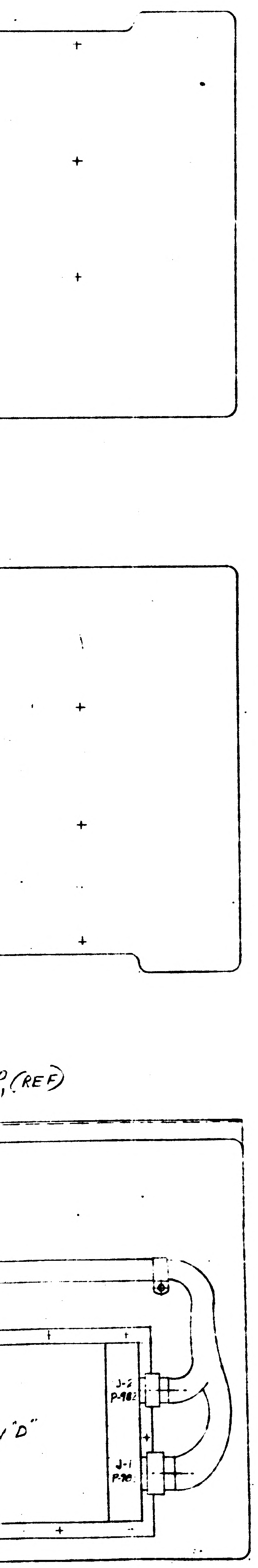
P (REF)
"D"
J-2 P-983
J-1 P-9..

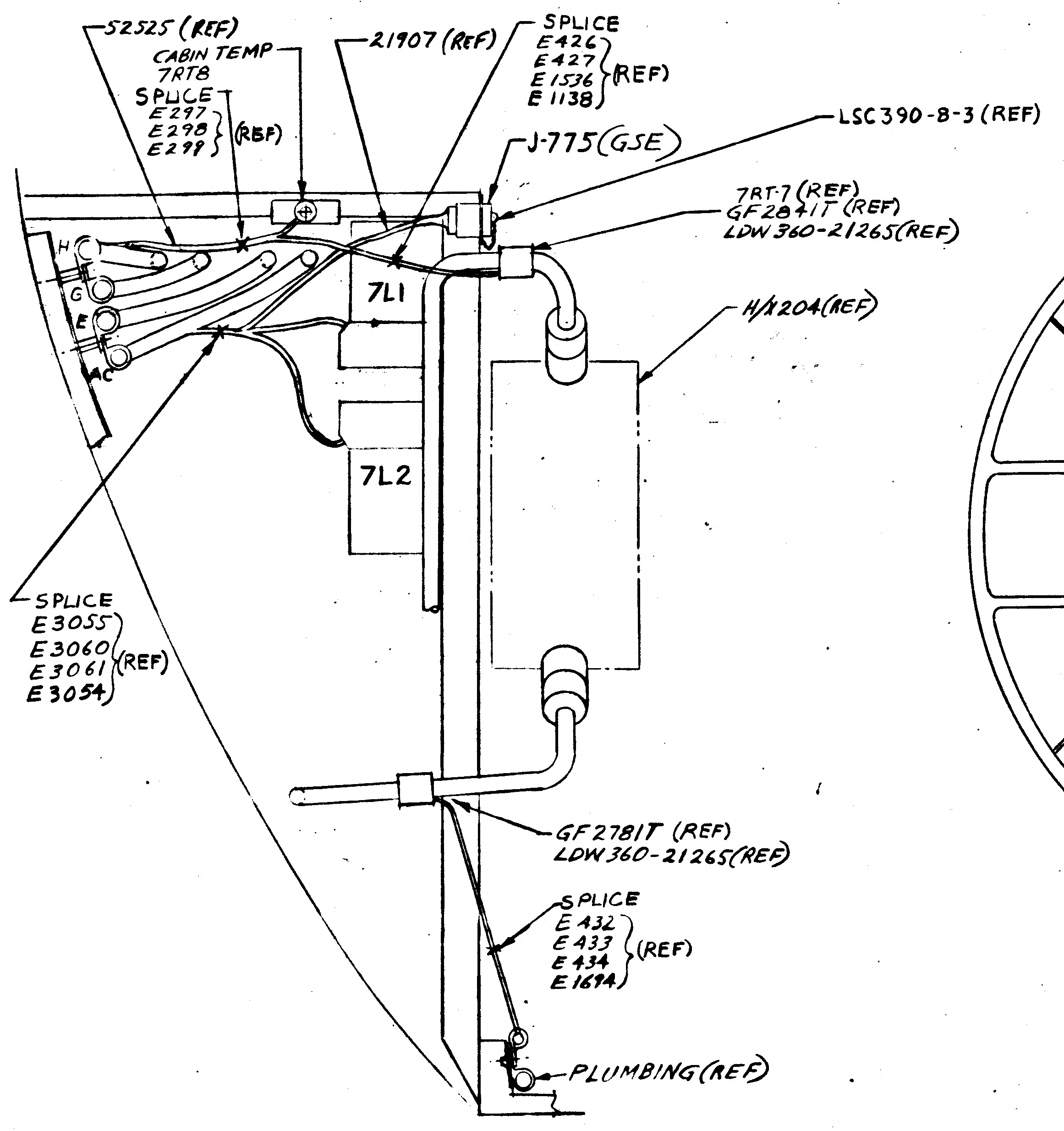
52525 (REF)
CABIN TEMP 7RT8
SPLICE E297 E298 E299 (REF)
21907 (REF)
SPLICE E426 E427 E1536 E1138 (REF)
LSC390-8-3 (REF)
J-775 (GSE)
7RT-7 (REF) GF2841T (REF) LDW 360-21265 (REF)
H/X 204 (REF)
H
G
E
AC
7L1
7L2
SPLICE E3055 E3060 E3061 E3054 (REF)
GF2781T (REF) LDW 360-21265 (REF)
SPLICE E432 E433 E434 E1694 (REF)
PLUMBING (REF)

VIEW P-P
SCALE ~ HALF
ZONE 10A SH4

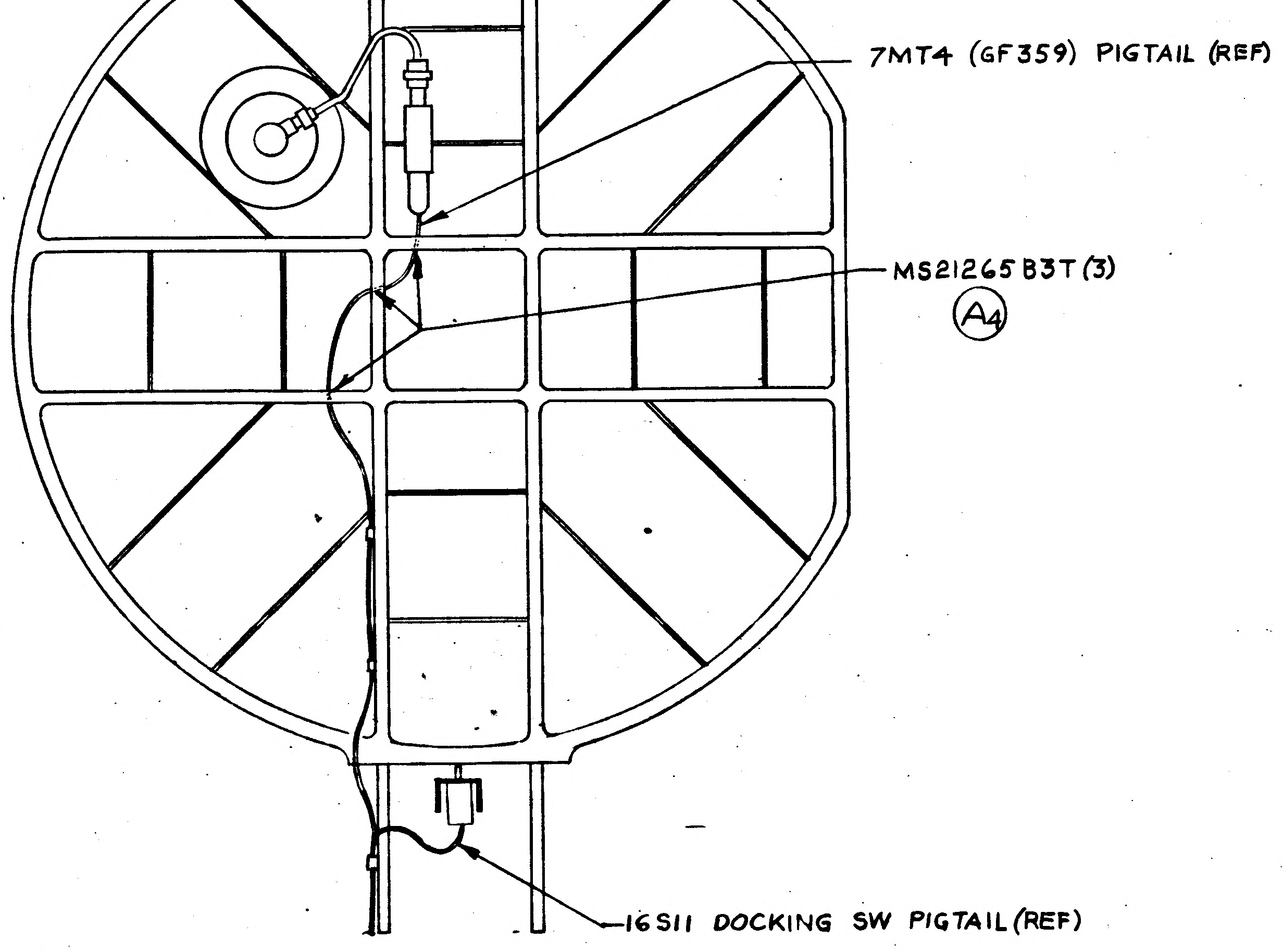
7MT4 (GF359) PIGTAIL (REF)
MS21265 B3T (3)
A4
16511 DOCKING SW PIGTAIL (REF)

VIEW LKG UP TOP HATCH
A4

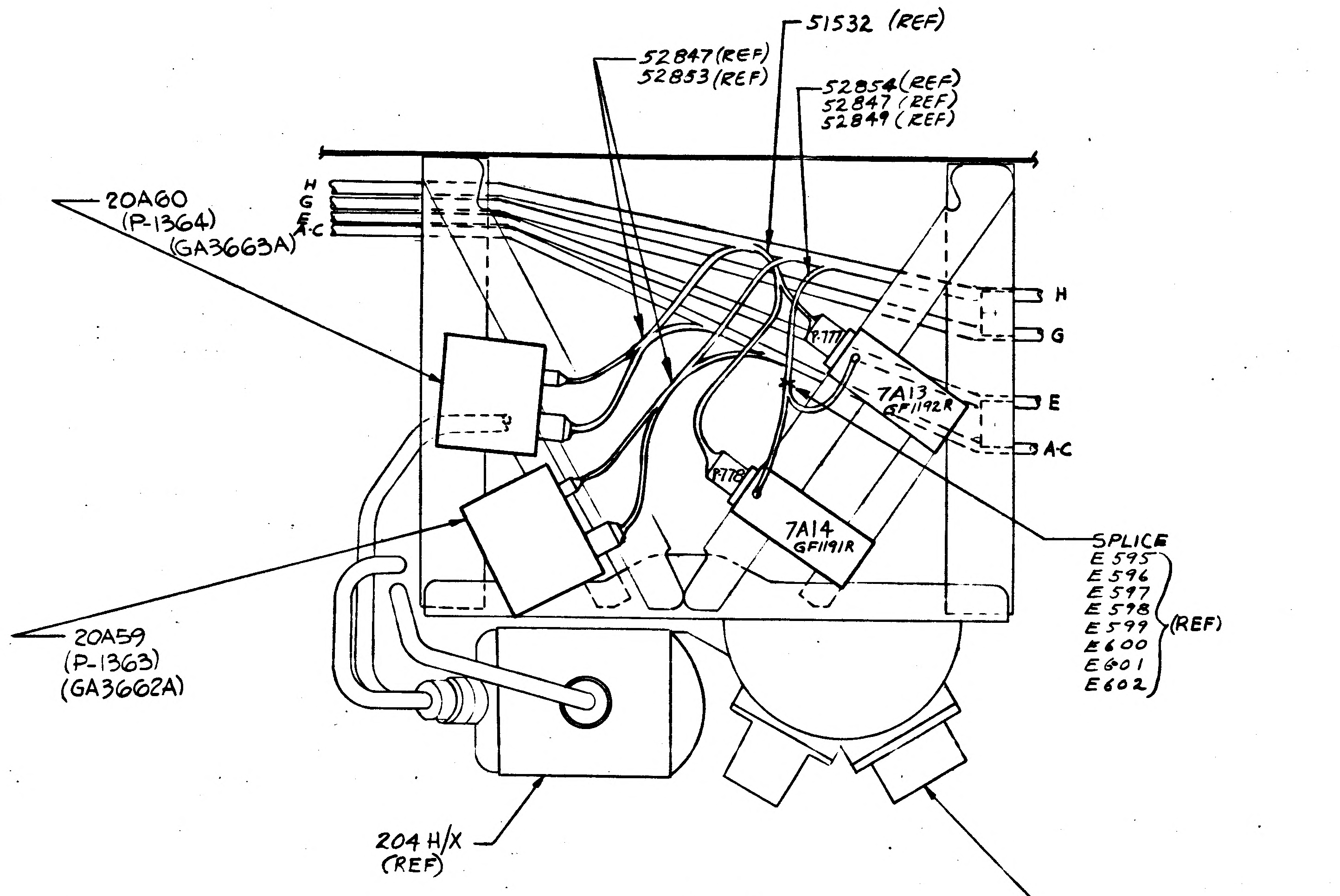
51532 (REF)
52847 (REF) 52853 (REF)
52854 (REF) 52847 (REF) 52849 (REF)
20A60 (P-1364) (GA3663A)
H G E A-C
H
G
E
A-C
P-777
P-778
7A13 GF1192R
7A14 GF1191R
SPLICE E595 E596 E597 E598 E599 E600 E601 E602 (REF)
20A59 (P-1363) (GA3662A)
204 H/X (REF)
COOLANT PUMP (REF)

VIEW N-N
SCALE ~ HALF
ZONE 10B SH4

02/03 NAS 9-1100

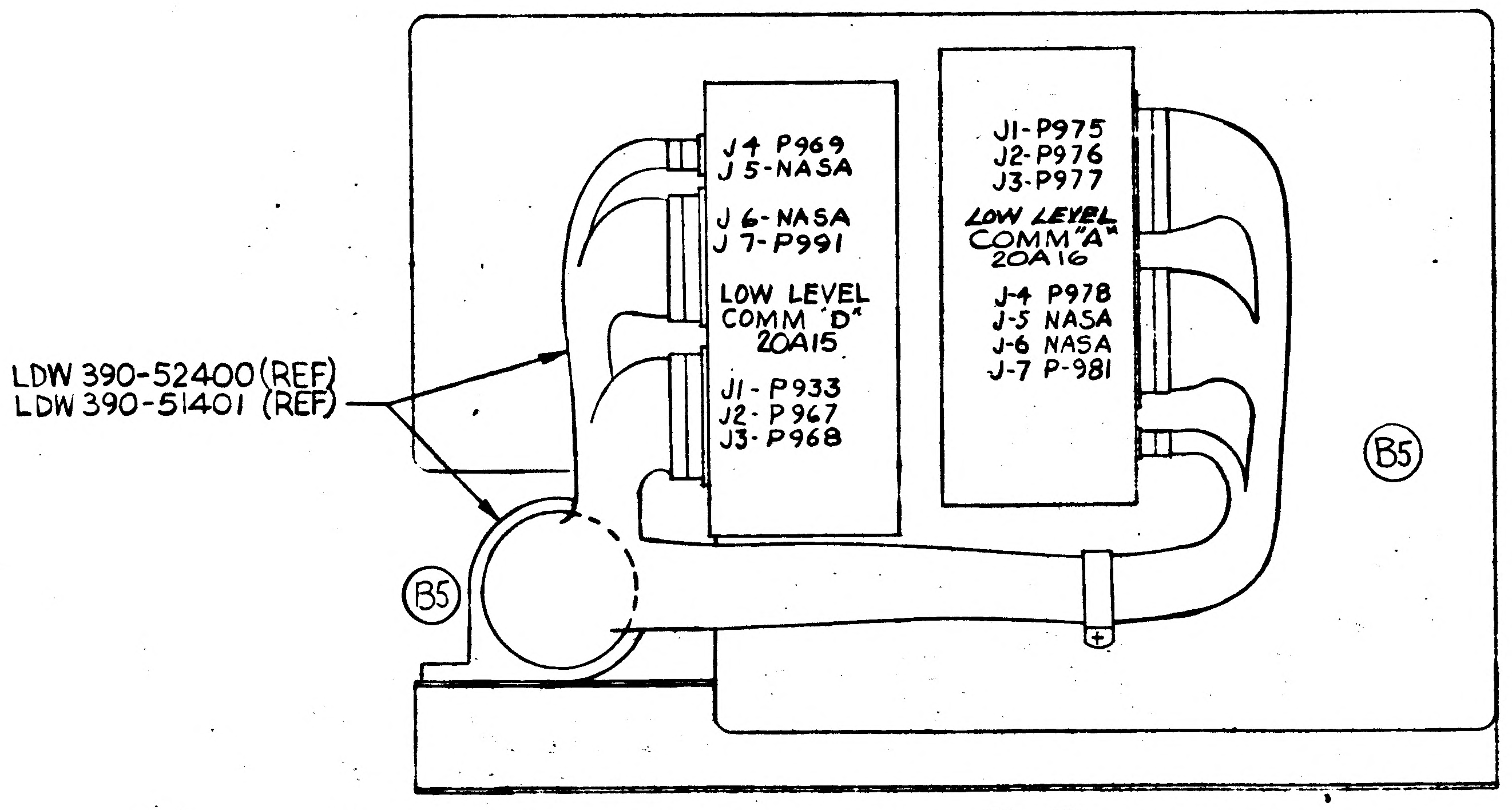
J4 P969
J5-NASA
J6-NASA
J7-P991
LOW LEVEL COMM "D" 20A15
J1-P933
J2-P967
J3-P968
J1-P975
J2-P976
J3-P977
LOW LEVEL COMM "A" 20A16
J-4 P978
J-5 NASA
J-6 NASA
J-7 P-981
LDW 390-52400 (REF)
LDW 390-51401 (REF)
B5
B5

VIEW B-B B5
SCALE ~ HALF
ZONE 4B SH4

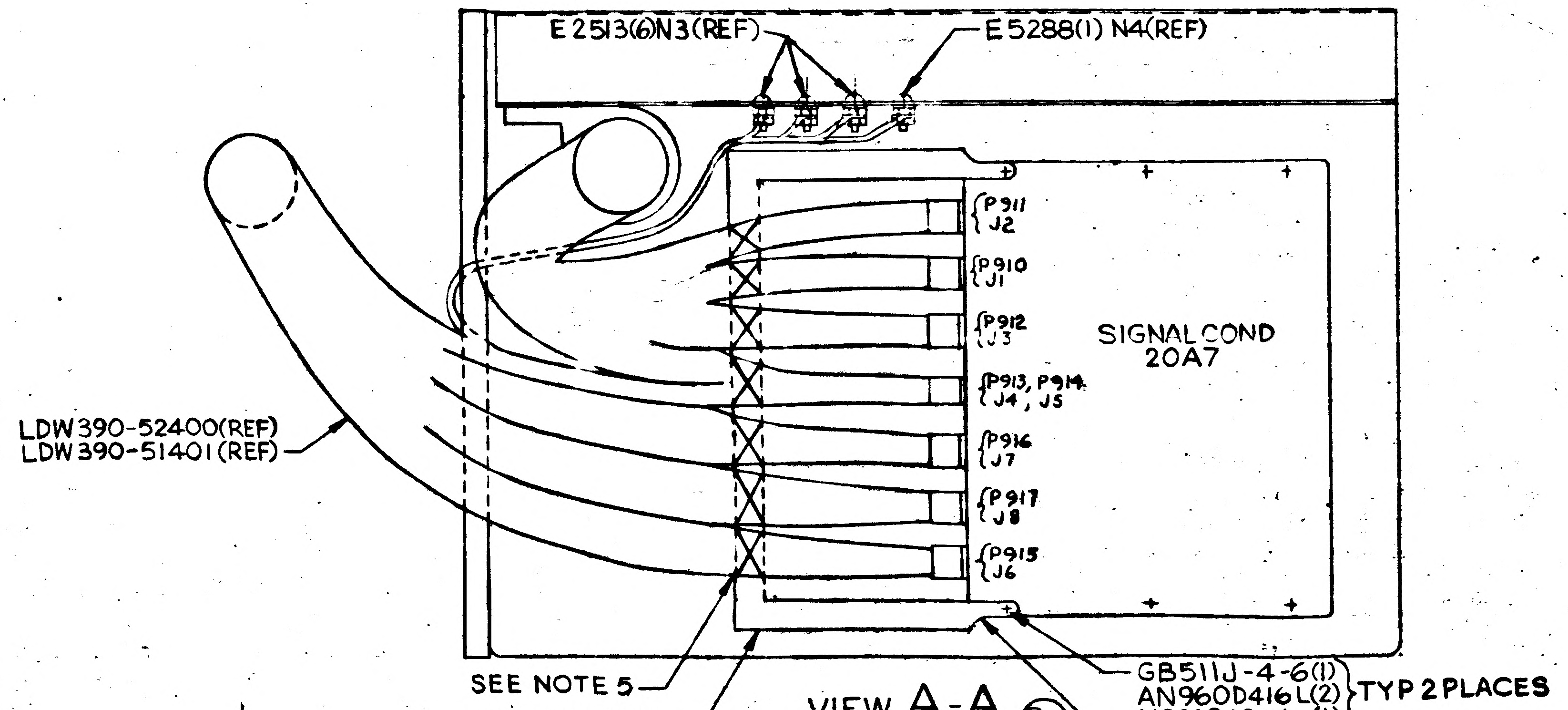
E2513(6)N3 (REF)
E5288(1) N4 (REF)
P911 J2
P910 J1
P912 J3
P913, P914 J4, J5
P916 J7
P917 J8
P915 J6
SIGNAL COND 20A7
LDW390-52400(REF)
LDW390-51401(REF)
SEE NOTE 5
SEE NOTE 16
GB511J-4-6(1)
AN960D416L(2)
MS21042L4 (1)
TYP 2 PLACES
LDW 280-16083-1

VIEW A-A B5
SCALE ~ HALF
ZONE 4C SH4

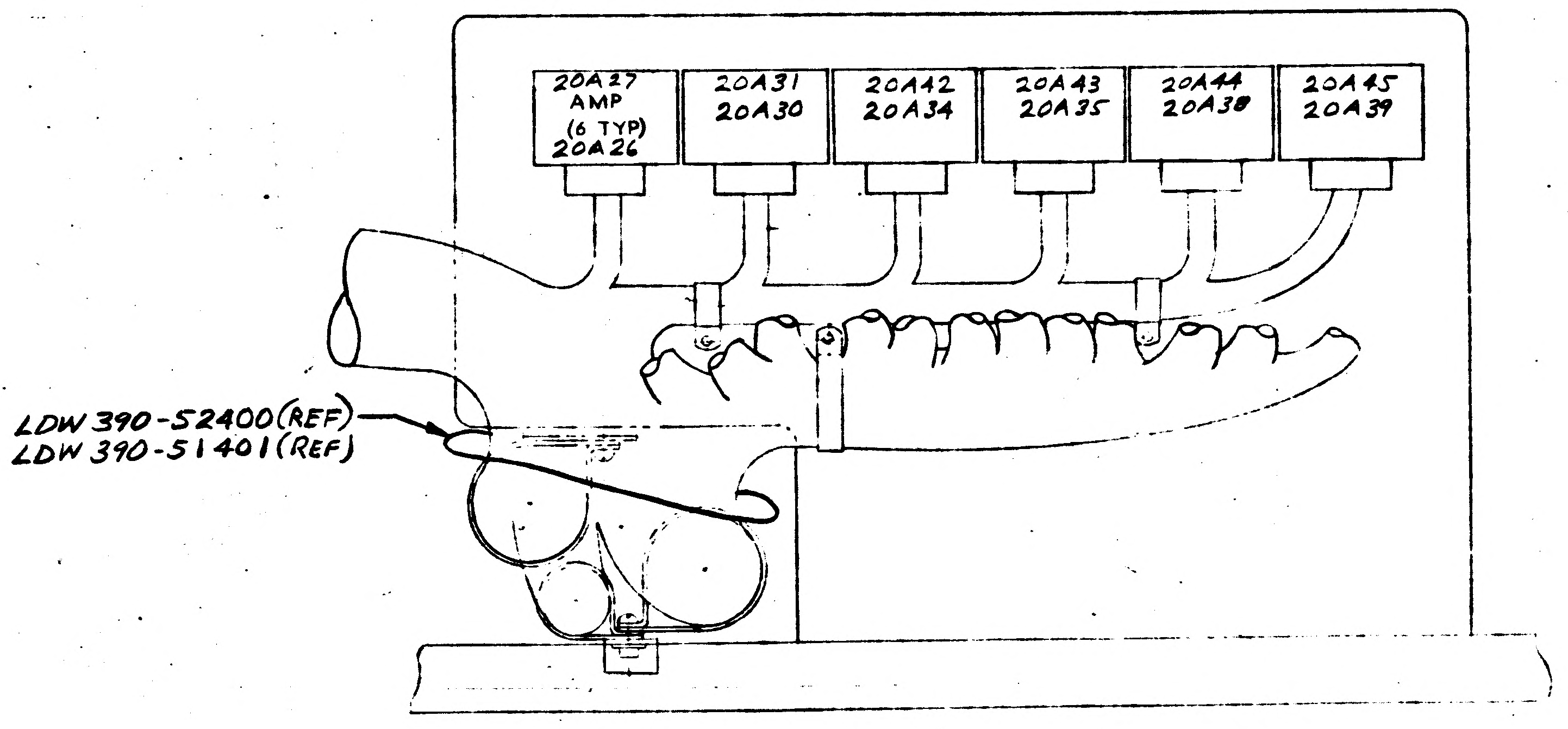
20A27 AMP (6 TYP) 20A26
20A31 20A30
20A42 20A34
20A43 20A35
20A44 20A38
20A45 20A39
LDW 390-52400 (REF)
LDW 390-51401 (REF)

VIEW E-E
ZONE 4B SH4
SCALE ~ HALF

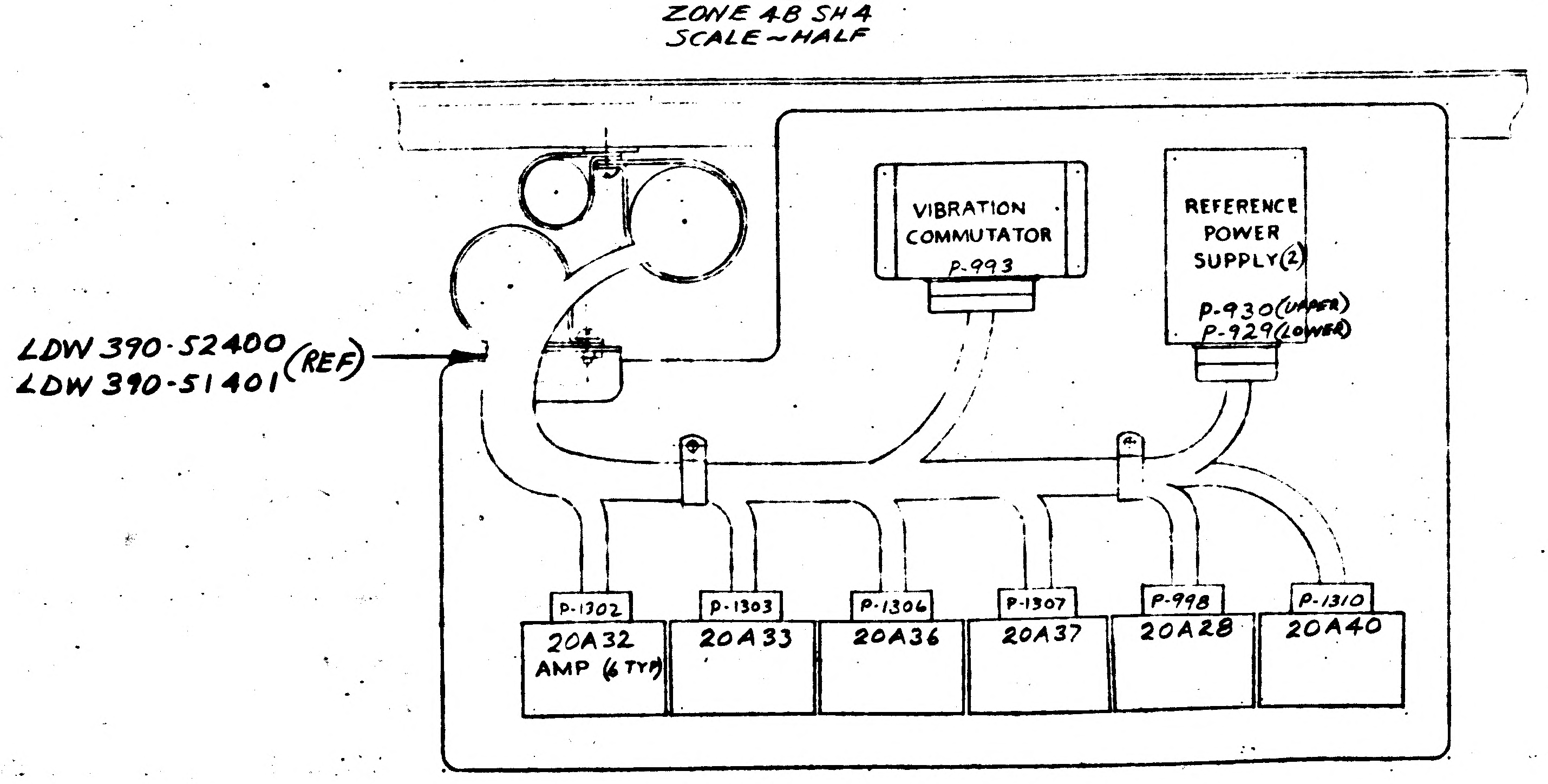
VIBRATION COMMUTATOR P-993
REFERENCE POWER SUPPLY (2)
P-930 (UPPER)
P-929 (LOWER)
LDW 390-52400
LDW 390-51401 (REF)
P-1302
P-1303
P-1306
P-1307
P-998
P-1310
20A32 AMP (6 TYP)
20A33
20A36
20A37
20A28
20A40

VIEW F-F
ZONE 4B SH4
SCALE ~ HALF

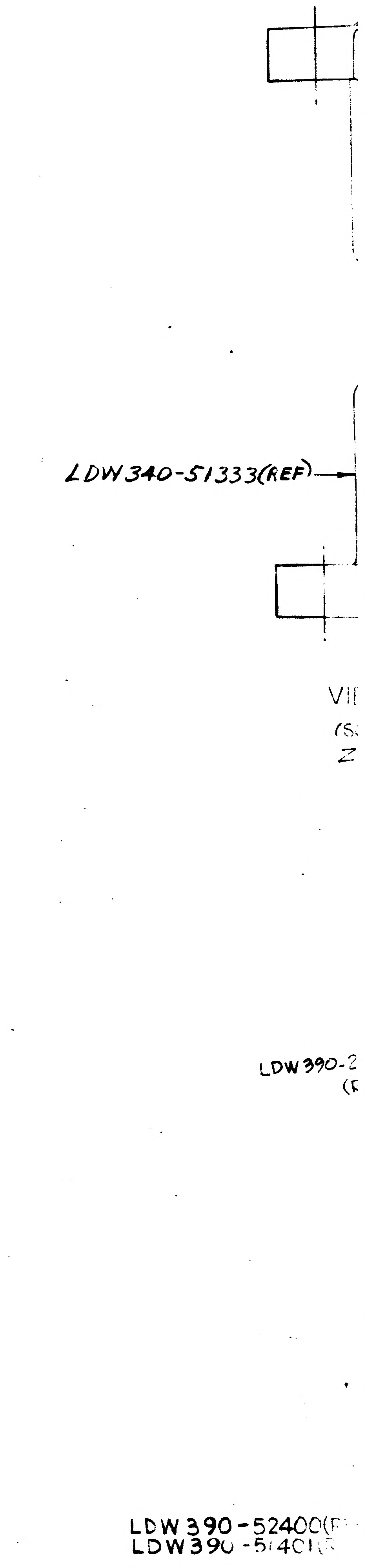
LDW 340-51333 (REF)
VI
(S
Z
LDW 390-2
LDW 390-52400(
LDW 390-5140

CODE IDENT NO.	DWG NO.	SHEET
26512	LDW 280-52358	5

4 (GF359) PIGTAIL (REF)

31265 B3T (3)
(A4)

GTAIL (REF)

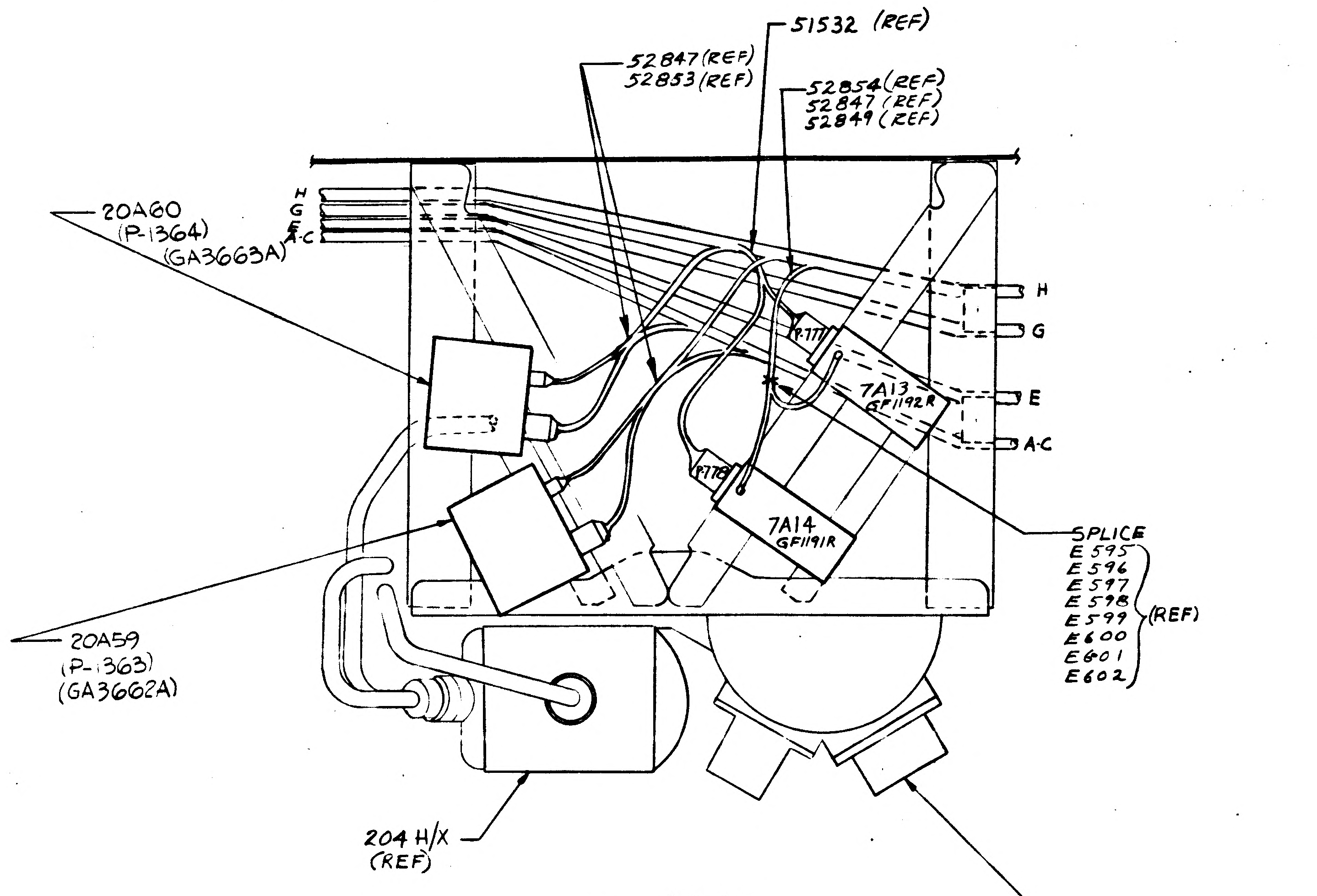
51532 (REF)
52847 (REF)
52853 (REF)
52854 (REF)
52847 (REF)
52849 (REF)
20A60
(P-1364)
(GA3663A)
H
G
E
A-C
7A13
GF1192R
7A14
GF1191R
P-777
P-778
SPLICE
E595
E596
E597
E598
E599
E600
E601
E602
(REF)
20A59
(P-1363)
(GA3662A)
204 H/X
(REF)
COOLANT PUMP (REF)

VIEW N-N
SCALE ~ HALF
ZONE 10B SH4

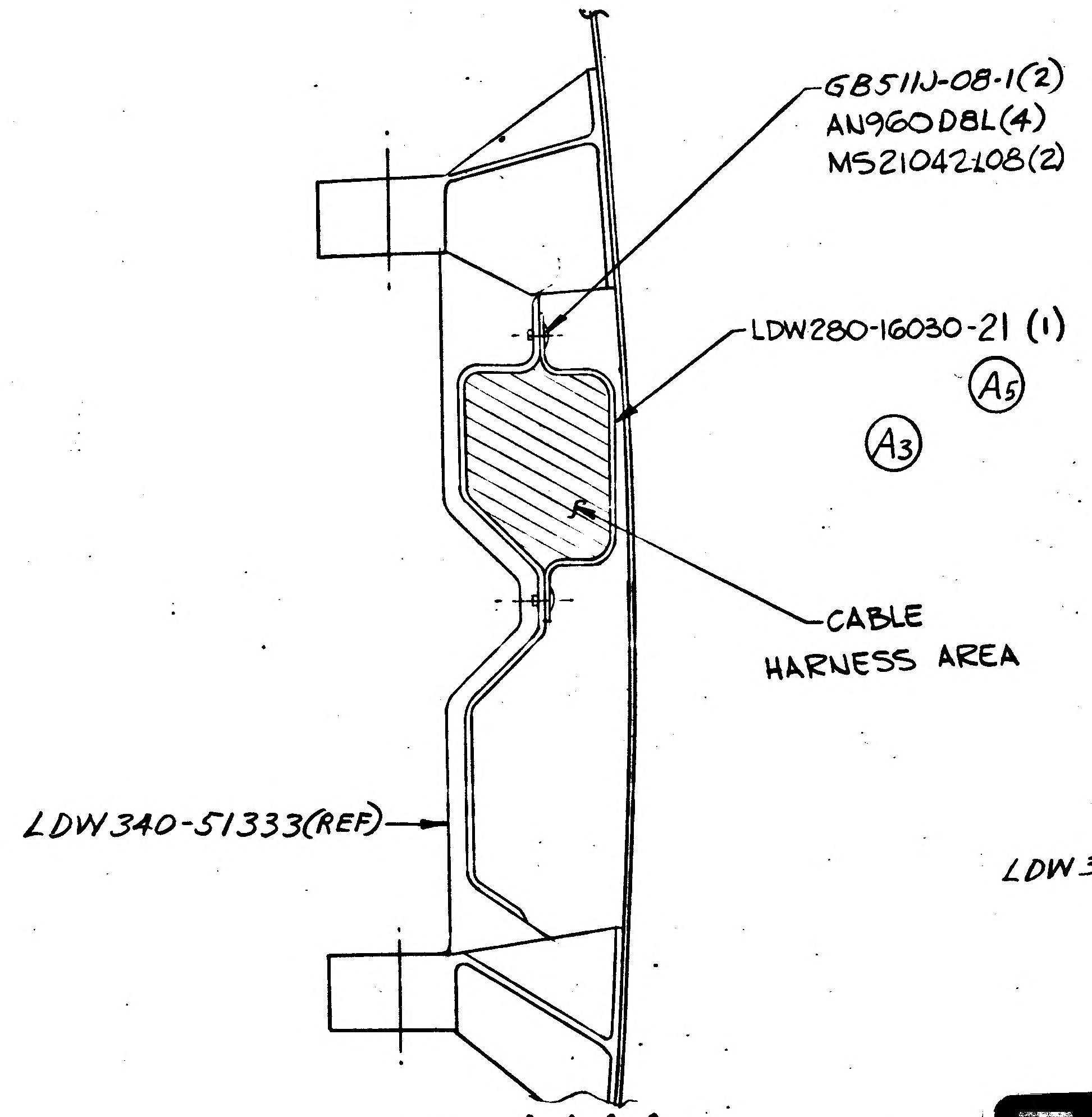
GB511J-08-1(2)
AN960D8L(4)
MS21042L08(2)
LDW280-16030-21 (1)
A5
A3
CABLE
HARNESS AREA
LDW340-51333(REF)

VIEW M-M
(SCALE: FULL)
ZONE 2A SH4

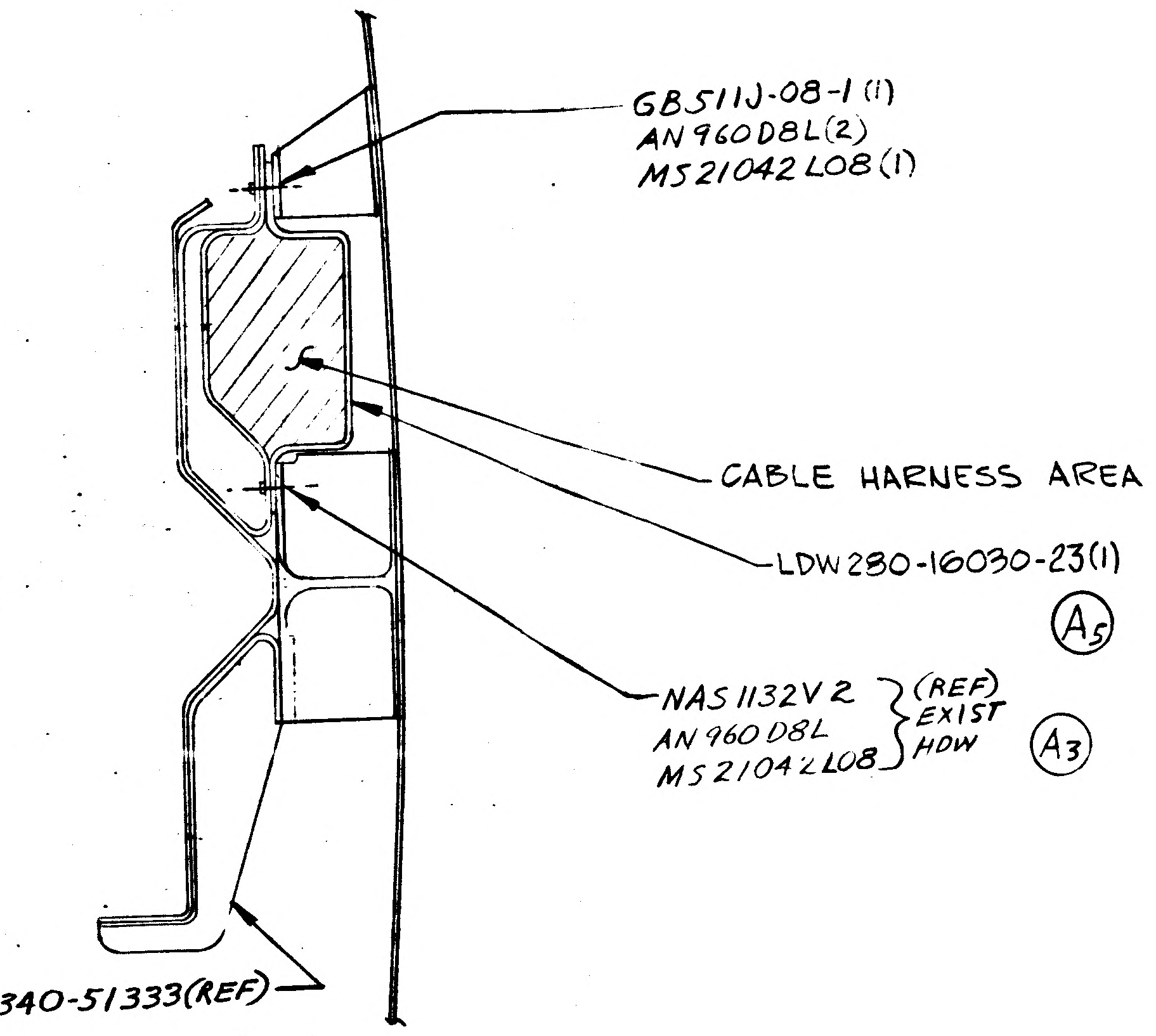
GB511J-08-1 (1)
AN960D8L(2)
MS21042L08 (1)
CABLE HARNESS AREA
LDW280-16030-23(1)
A5
NAS1132V2
AN960D8L
MS21042L08
(REF)
EXIST
HDW
A3
LDW340-51333(REF)

VIEW L-L
(SCALE: FULL)
ZONE 3D SH4

03/03 NAS 9-1100

MANUFACTURING OPERATIONS

UNLESS OTHERWISE SPECIFIED
NOTES CHECKED √ APPLY TO THIS DWG.

PART NUMBER AND ALL OTHER MARKINGS IN REGION MARKED ☒ USE BOTH SIDES IF NECESSARY.	
FILLET AND INSIDE CORNER RADII TOLERANCES .016R TO .062R ± .010 .063R TO .250R ± .015 OVER .250R ± .030	
DEPTH SHOWN FOR TAPPED HOLES IS FULL THDS. 2-3 IMP THDS. BEYOND PERMISSIBLE.	
EXTERNAL THREAD LENGTH SHOWN INCLUDES 2 IMPERFECT THREADS MAX.	
DO NOT CADMIUM PLATE & PAINT HOLES OR SURFACES MARKED WITH DOUBLE ASTERISK.	
MISMATCH STEP OF ± .005 PERMISSIBLE DUE TO CHANGE OF CUTTERS AT INSIDE INTERSECTING SURFACES.	
DIAMETERS MARKED MUST BE CONCENTRIC WITHIN FULL INDICATOR READING	
HOLES MUST BE KEPT FREE OF CHROME PLATING SOLUTION.	
ALL DIMENSIONS SHOWN TO BE MET AFTER CADMIUM PLATING. THICKNESS OF PLATE .0003 MIN. TO .0005 MAX. MIN. THICKNESS TO BE .0002 ON THREADED AREAS. NO ALLOWANCE FOR PLATING IN HOLES	
125 SURFACE ROUGHNESS INCLUDING REAMED HOLES PER MIL-STD-10	
200 FOR ALL DRILLED HOLES	
REMOVE ALL BURRS. BREAK ALL EDGES .015-.031	
INSPECTION INFORMATION MINIMUM PERMISSIBLE AVERAGE EDGE DISTANCE MARKED IS	
SYMBOL √ DENOTES SURFACE TO BE MACHINED	
UNLESS OTHERWISE SPECIFIED TOLERANCE ON FLANGES IS ± 1/32	
LENGTHS OF AN, NAS & MS AL ALY RIVETS SHORTER THAN 1 INCH ARE NOT SPECIFIED.	
TOLERANCE ON LOFTED DELINEATIONS IS	

DWG SIZE 34 X 112

PRINTING INFO ONLY
FULL SIZE SHEET AREA (36 X 124)- 31 SQ. FT.
1/2 SIZE SHEET AREA (1/4 OF FULL)- 8 SQ. FT.

PRINT TRIM LINE

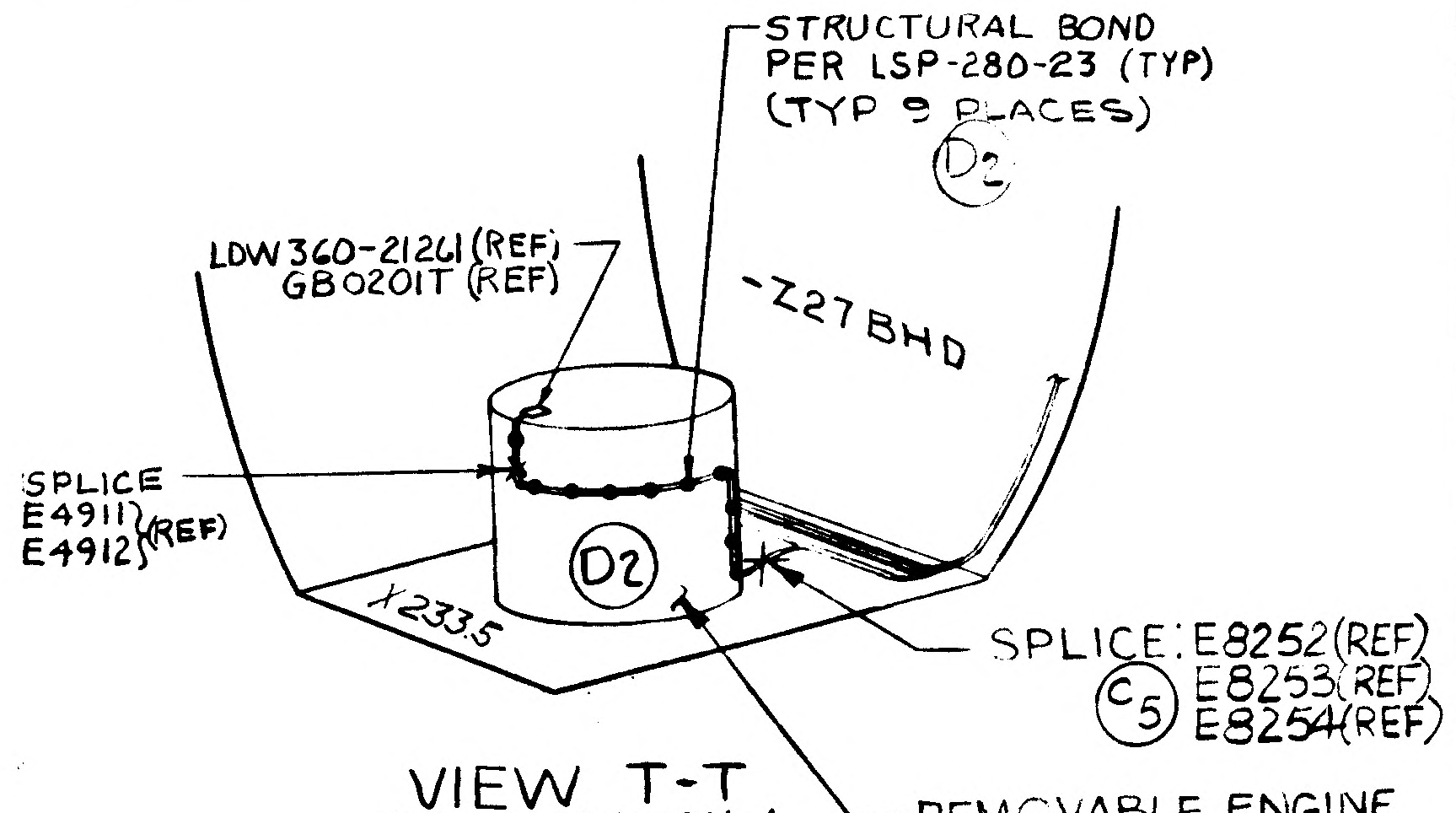
STRUCTURAL BOND
PER LSP-280-23 (TYP)
(TYP 9 PLACES)
D2
LDW360-21261 (REF)
GB0201T (REF)
-Z27 BHD
SPLICE
E4911
E4912
(REF)
D2
X233.5
SPLICE: E8252(REF)
E8253(REF)
E8254(REF)
C5
REMOVABLE ENGINE
COVER (REF)

VIEW T-T
ZONE 10A SH 4
NO SCALE
(A11)

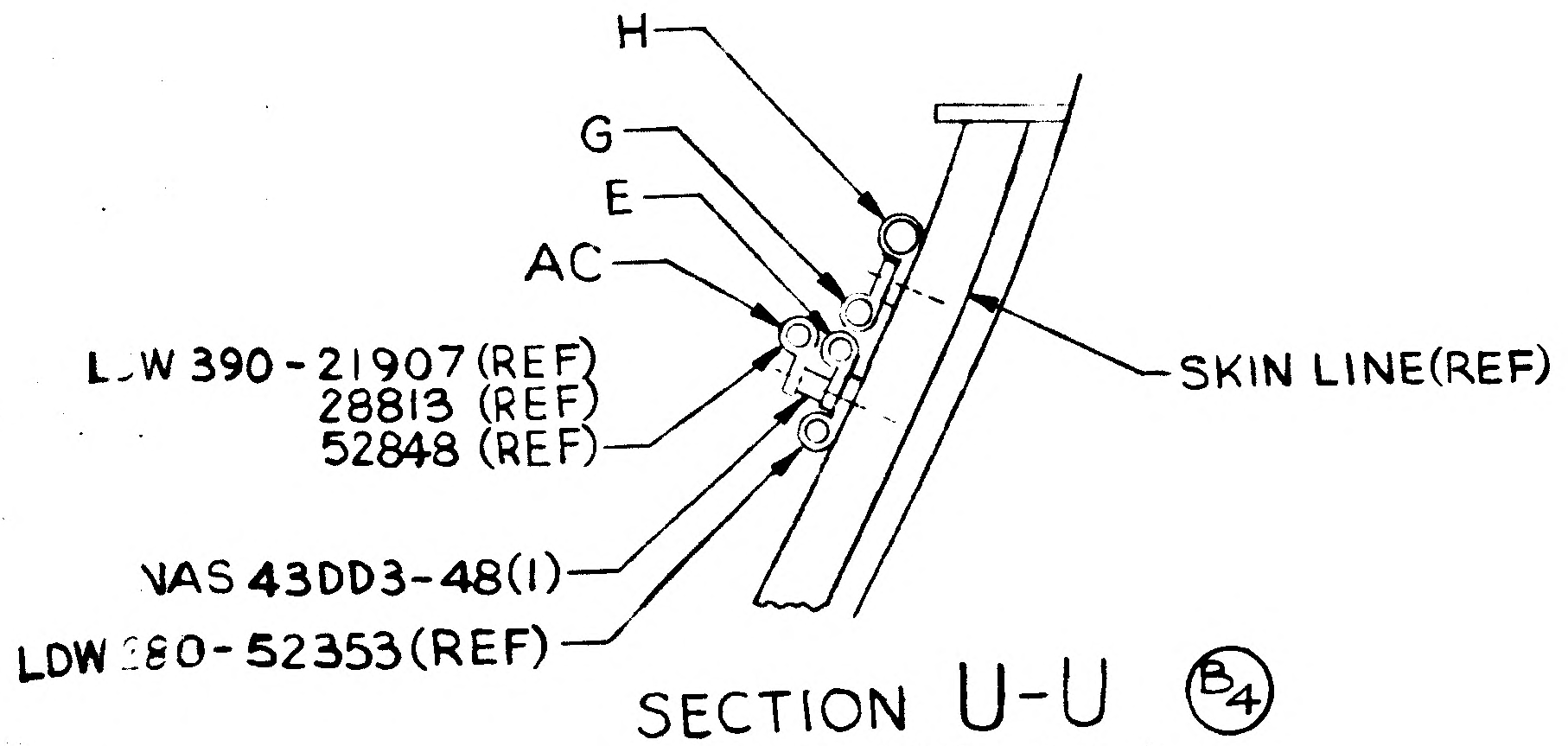
H
G
E
AC
LDW 390-21907 (REF)
28813 (REF)
52848 (REF)
NAS 43DD3-48(1)
LDW 280-52353(REF)
SKIN LINE(REF)

SECTION U-U (B4)
ZONE 10B SH 4
SCALE: NONE

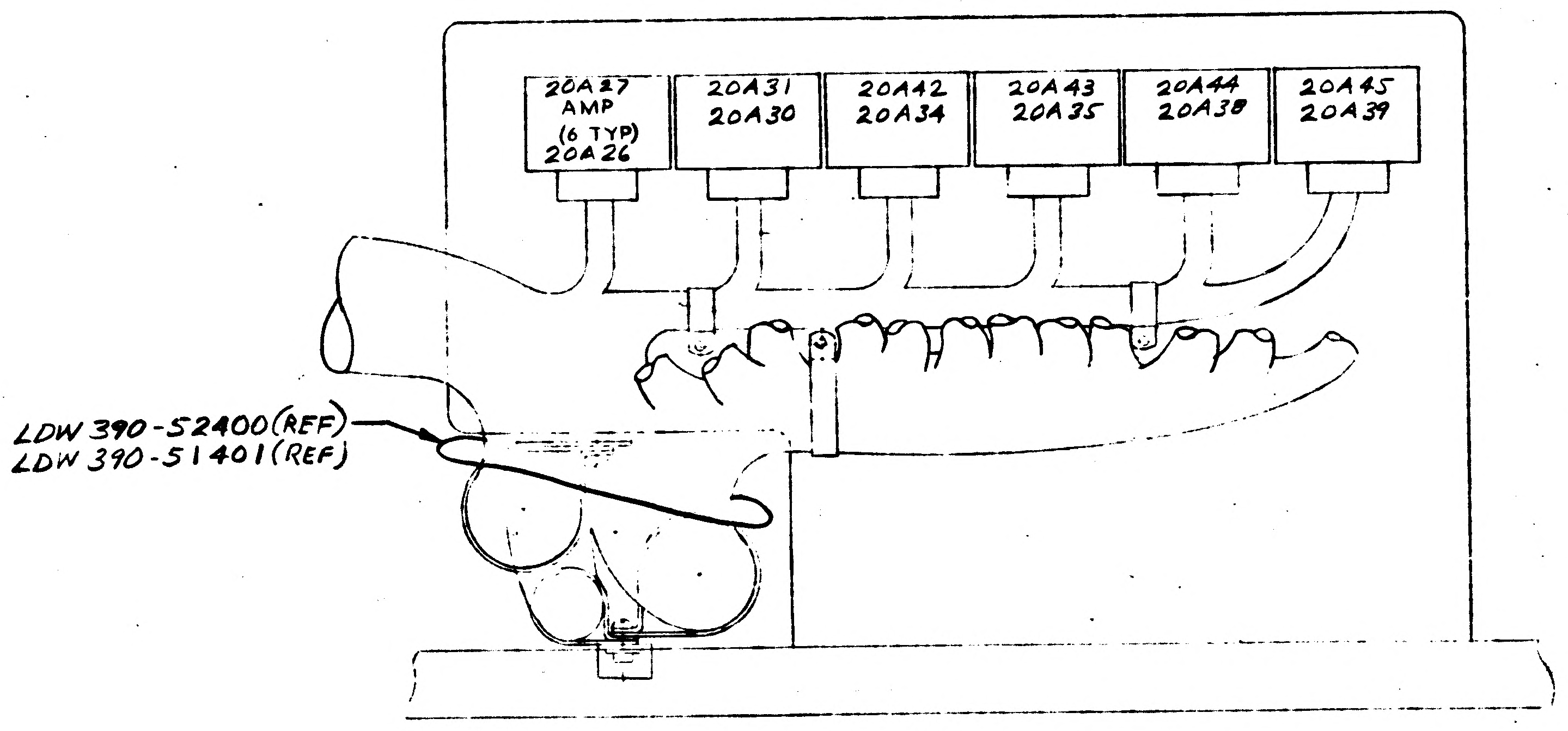
20A27
AMP
(6 TYP)
20A26
20A31
20A30
20A42
20A34
20A43
20A35
20A44
20A38
20A45
20A39
LDW 390-52400(REF)
LDW 390-51401(REF)

VIEW E-E
ZONE 4B SH4
SCALE ~ HALF

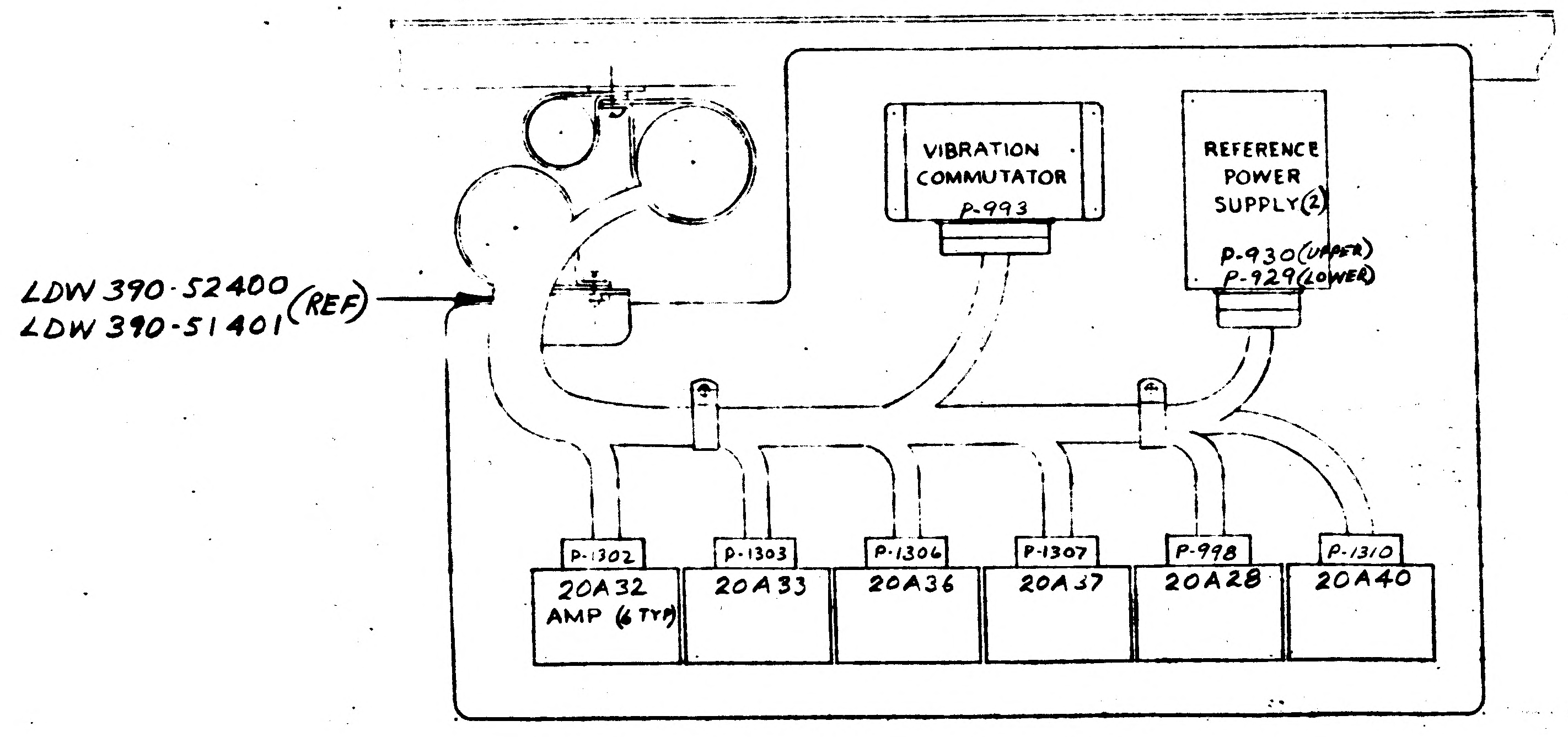
VIBRATION
COMMUTATOR
P-993
REFERENCE
POWER
SUPPLY(2)
P-930(UPPER)
P-929(LOWER)
LDW 390-52400
LDW 390-51401
(REF)
P-1302
20A32
AMP (6 TYP)
P-1303
20A33
P-1306
20A36
P-1307
20A37
P-998
20A28
P-1310
20A40

VIEW F-F
ZONE 4B SH4
SCALE ~ HALF

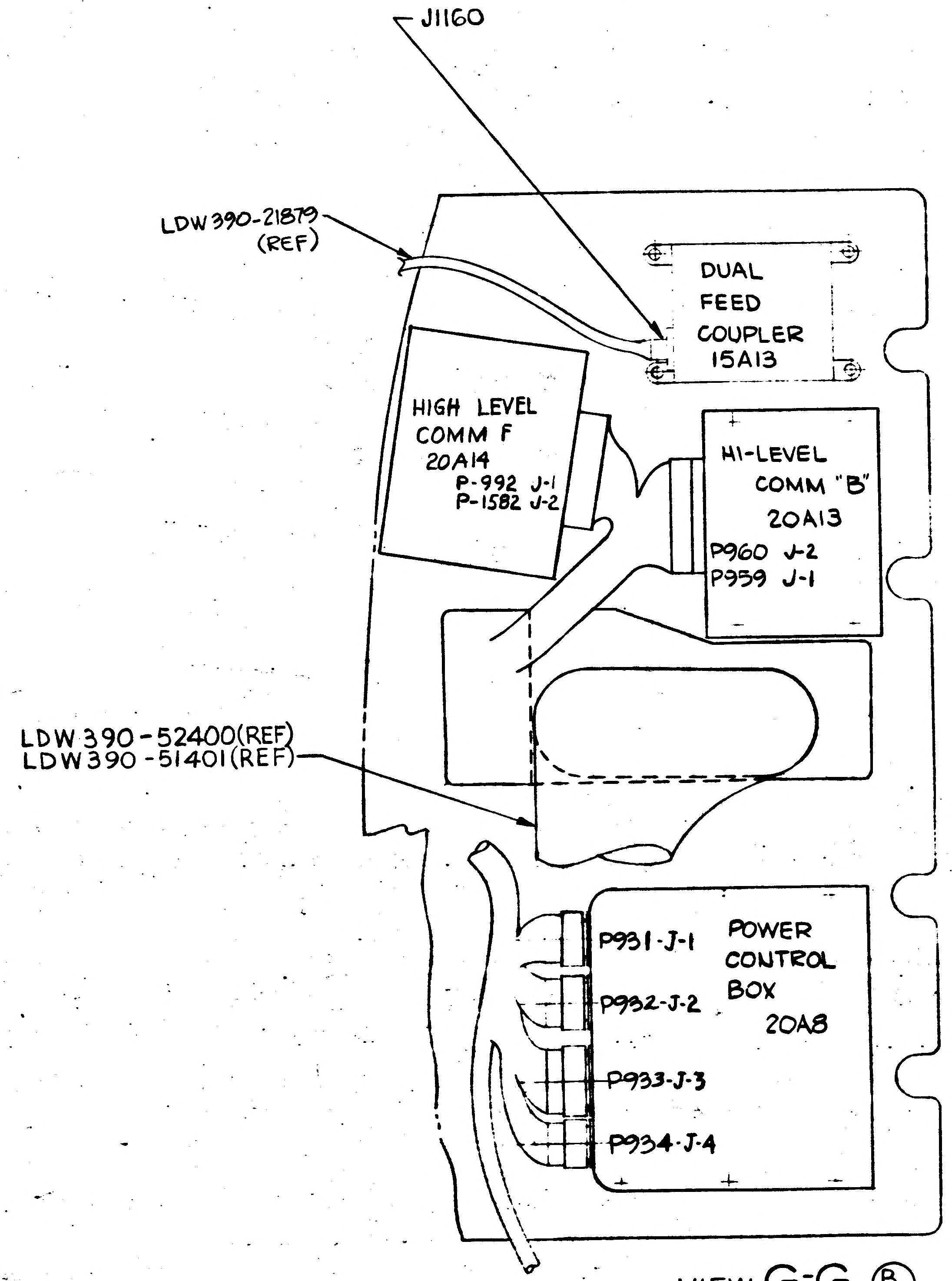
J1160
LDW390-21879
(REF)
DUAL
FEED
COUPLER
15A13
HIGH LEVEL
COMM F
20A14
P-992 J-1
P-1582 J-2
HI-LEVEL
COMM "B"
20A13
P960 J-2
P959 J-1
LDW390-52400(REF)
LDW390-51401(REF)
P931-J-1
P932-J-2
P933-J-3
P934-J-4
POWER
CONTROL
BOX
20A8

VIEW G-G (B5)
SCALE ~ HALF
ZONE 4B SH4

CODE IDENT NO.	DWG NO.	SHEET
26512	LDW280-52358	5

FRAME 3 | FRAME 4

GRUMMAN AIRCRAFT ENGRG CORP., BETHPAGE, L. I., NEW YORK				
LM	SIZE J	CODE IDENT NO. 26512	LDW280-52358	D
MODEL OR END ITEM	SCALE 1/2 & NOTED		SHEET 5	

(D)

3 FR

LDW280-52358-D

LDW280-52358 D

*

GRUMMAN AIRCRAFT ENGINEERING CORP.
CODE IDENT NO. 26512

ENGINEERING ORDER

ENG 32.1 REV 3-65

DWG. NO. LEO 280-
EO NO. 314
CONTROL INFO NO. LDW280-A2087

ON SH 3 OF THE FOLLOWING DWGS

DWG No.	CHG NO	DWG No.	CHG NO	DWG NO	CHG NO
✓ LDW280-52350	A2	✓ LDW280-52354	A4	✓ LDW280-52358	A1
✓ 52351	A2	✓ -52355	A2	-52359	A3
✓ 52352	A1	✓ -52356	A1	LDW 280-52360	A2
✓ LDW 280-52353	A1	✓ LDW280 - 52357	B2		

ADD THE FOLLOWING NOTE

ǂ SUBSTITUTION OF NAS1132V*, AN525-832R* OR AN525-832-* BOLTS FOR THE GB511J-08-* BOLT IS PERMISSIBLE

ǂ USE NEXT AVAILABLE NUMBER.

THIS IS A RE-ISSUE
OF LEO 280-314 ~
INCOMPLETE CHANGE NO'S
ON ORIG ISSUE

(5)

DETAIL SPEC REQ ☐ CL II ENGRG CHG ☐ CL I ENGRG CHG ☐

REASON FOR EO: HARDWARE NOT AVAILABLE

DESCRIPTION OF EO: ON SH 3 ADDED NOTE ǂ (ǂ)

GAEC EO RELEASE: 10/17

MODEL	PROCURING ACTIVITY NO.	GAEC UNIT NO.	SUB CONTR UNIT NO.
		EFFECTIVITY	
LM		LM-2 (32)	

DRAWING CHANGE REQD: REVISE DWG ✓ RECORD EO

DISPOSITION OF PARTS: REWORK NOT REQD SCRAP

APPROVED BY	JW	—	—	—	FW			
✓ DATE	10-11-66				10-17		10-12-66	10/15/66
	VD1	SUPPORT	RELIAB. GROUP	GROUP LEADER	STRESS GROUP	LIAISON ENGRG	PROJ ENGRG	

PRIORITY: C

DRAWING TITLE: LINES INSTALLATIONS

DRAWING NO: LEO-280-

EO NO. 314

ISSUED BY C.H. COHEN X7033 SECTION EQUIP LINES (VD1) GROUP NO. 332 PL 35

ENG 32.1 REV 3-65

GRUMMAN AIRCRAFT ENGINEERING CORP.
CODE IDENT NO. 26512
ENGINEERING ORDER

DWG. NO. LEO 280
EO NO. 377
CONTROL INFO NO. LDW 280A-3703

TO THE FOLLOWING INSTALLATIONS ADD NOTE * (* USE NEXT AVAIL NO)

DWG NO.	CHANGE No
LDW280-28357 ✓	A2
LDW 280-28360 ✓	A1
LDW280-51357 ✓	A4
LDW280-51358 ✓	A1
LDW280-51359 ✓	A1
LDW280-51360 ✓	A2
LDW280-51607 ✓	A5

DWG NO.	CHANGE NO
LDW 280-52357 ✓	B3
LDW 280-52358 ✓	A2
LDW 280-52359	A4
LDW 280-52360	A3
LDW 280-52607	A1
LDW 280-53357	A1
LDW 280-53358	A1
LDW 280-53359	A1
LDW280-53360	A1

* MS21919WDH CLAMPS & GC500S CLAMPS ARE INTERCHANGEABLE & EITHER MAY BE USED IN THIS INSTL.

DETAIL SPEC REQ	☐	CL II ENGRG CHG	☐	CL I ENGRG CHG	☐

REASON FOR EO: TO ALLOW MANUFACTURING TO SWITCH OVER TO THE REVISED ELECTRONIC CLAMP.

DESCRIPTION OF EO: TO SH 3 ADDED NOTE *

GAEC EO RELEASE: FR 12/2/66

MODEL	PROCURING ACTIVITY NO.	GAEC UNIT NO.	SUB CONTR UNIT NO.
LM		LTA-8 (18)	LM-3 (33)
		LM-1 (31)	
		LM-2 (32)	

DRAWING CHANGE REQD		DISPOSITION OF PARTS		APPROVED BY								
✓		NOT	REQD	DATE	11/22/66				11/24		11-29-66	11-29-66
REVISE DWG	RECORD EO	REWORK	SCRAP	1	YD1	SUPPORT	RELIAB. GROUP	GROUP LEADER	STRESS GROUP	LIAISON ENGRG	PROJ ENGRG	~~GOVT~~

PRIORITY: C
DRAWING TITLE: LINES INSTL. - ELEC.
DRAWING NO.: LEO 280
EO NO.: 377

ISSUED BY C.H. COHEN X7033 SECTION EQUIP LINES GROUP NO. 332 PL 35

01 NAS 9-1100

B

ENG 32.1 REV 3-65

GRUMMAN AIRCRAFT ENGINEERING CORP.
CODE IDENT NO. 26512
ENGINEERING ORDER

*

DWG. NO. LDW280-52358	EO NO. B1
CONTROL INFO NO. LM-5-15223	

ON -1 INSTL IN F/D & B/M

LDW280-16030-25 WAS LDW280-16030-13

RELEASED BY LIAISON

DETAIL SPEC REQ	☐	CL II ENGRG CHG	✓	CL I ENGRG CHG	☐	5

REASON FOR EO	DESCRIPTION OF EO	GAEC EO RELEASE C
EXISTING CLAMP TOO SMALL	ON -1 INSTL IN F/D & B/M LDW280-16030-25 WAS LDW280-16030-13	JK

MODEL	EFFECTIVITY		
	PROCURING ACTIVITY NO.	GAEC UNIT NO.	SUB CONTR UNIT NO.
LM		LM-2 (32)	

DRAWING CHANGE REQD		DISPOSITION OF PARTS	
✓		✓	
REVISE DWG	RECORD EO	REWORK	SCRAP

APPROVED BY	JW				DV	EUB	DAM	
DATE	6/6/67				5-27-67	5/27/67	5-31-67	5-29-67
1	VD1	SUPPORT	RELIAB. GROUP	GROUP LEADER	STRESS GROUP	LIAISON ENGRG	PROJ ENGRG	~~GOVT~~

PRIORITY	DRAWING TITLE	DRAWING NO.	EO NO.
C	LINES INSTL ELECTRONIC ASCENT STAGE-MIDSECT-INT	LDW280-52358	B1

ISSUED BY Hugh Ryan X1392 5-26-67 SECTION VD1 (EQUIP LINES) GROUP NO. 332 PL 5

01 NAS 9-1100

C

ENG 32.1 REV 3-65

GRUMMAN AIRCRAFT ENGINEERING CORP.
CODE IDENT NO. 26512
ENGINEERING ORDER

*1

DWG. NO. LDW280-52358
EO NO. B2
CONTROL INFO NO. LDW280A7487

ON -1 INSTL IN F/D & B/M CHANGE NUMBER OF "MIT" CABLE

6010670 WAS 6010659

DETAIL SPEC REQ ☐ CL II ENGRG CHG ☑ CL I ENGRG CHG ☐

5

REASON FOR EO: WRONG PART NUMBER CALLED OUT ON DRAWING

DESCRIPTION OF EO: ON -1 INSTL IN F/D & B/M 6010670 WAS 6010659

Ⓡ GAEC EO RELEASE: C
JK 6/15/7

MODEL	PROCURING ACTIVITY NO.	GAEC UNIT NO.	SUB CONTR UNIT NO.
LM		LM-2 (32)	

DRAWING CHANGE REQD		DISPOSITION OF PARTS	
REVISE DWG	RECORD EO	REWORK	SCRAP
✓		NOT	REQD

					GROUP LEADER	STRESS GROUP	LIAISON ENGRG	PRC. ENGRG	
APPROVED BY	jap				JEW	bw		Dam	
DATE	6/9/67				6/9/67	6-12		6/12/67	6/14/67
6	VDI	SUPPORT	RELIAB. GROUP						

PRIORITY: C

DRAWING TITLE: LINES INSTL ELECTRONIC A/C - MIDSECTION - INTERNAL

DRAWING NO. LDW280-52358

EO NO. B2

ISSUED BY HUGH RYAN X1392 6-9-67 SECTION VDI (EQUIP LINES) GROUP NO. 332 PL 25

01

NAS 9-1100

B

ENG 32.1 REV 3-65

GRUMMAN AIRCRAFT ENGINEERING CORP.
CODE IDENT NO. 26512
ENGINEERING ORDER

*

DWG. NO. LDW280-52358 | EO NO. B3
CONTROL INFO NO. LDW280A 6889

ON -1 INSTL IN F/D & B/M ADD HARDWARE & REVISE PICTURE OF J85.

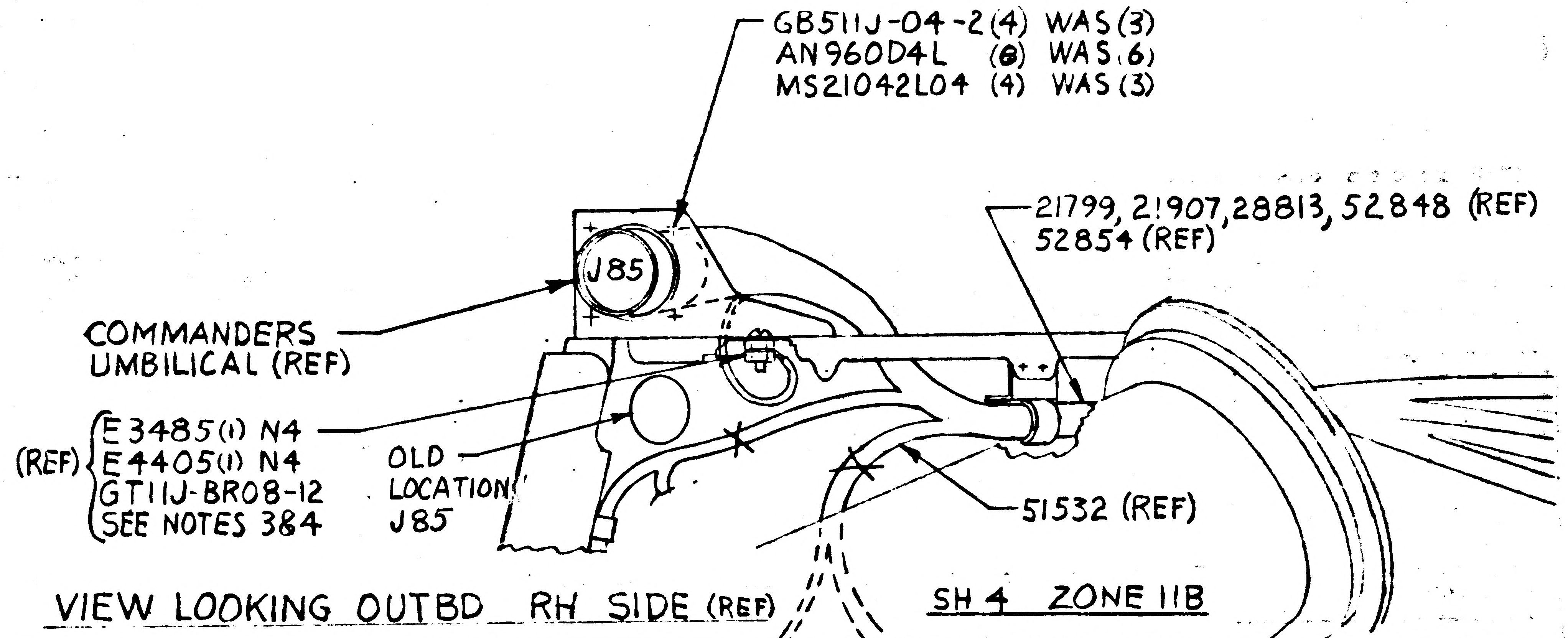

GB511J-04-2 (4) WAS (3)
AN960D4L (8) WAS (6)
MS21042L04 (4) WAS (3)
21799, 21907, 28813, 52848 (REF)
52854 (REF)
J85
COMMANDERS UMBILICAL (REF)
(REF) E3485(1) N4
E4405(1) N4
GT11J-BR08-12
SEE NOTES 3&4
OLD LOCATION J85
51532 (REF)

VIEW LOOKING OUTBD RH SIDE (REF)

SH 4 ZONE 11B

DETAIL SPEC REQ	☐	CL II ENGRG CHG	☐	CL I ENGRG CHG	✓	LCD 1429 CCA # 581

REASON FOR EO: PROVIDE HIGH PRESSURE WATER TO PLSS HOSE FROM A/S TANK

DESCRIPTION OF EO: NOTED

GAEC EO RELEASE: JK 6/27/7

MODEL	PROCURING ACTIVITY NO.	GAEC UNIT NO	SUB CONTR UNIT NO.
LM		LM-2(32)	

DRAWING CHANGE REQD: REVISE DWG ✓ RECORD EO

DISPOSITION OF PARTS: REWORK ✓ SCRAP

APPROVED BY					HW			
DATE	6/20/67			6/21/67	6/27/67		6/27	6-27-67
6-20-67	VDI	SUPPORT	RELIAB GROUP	GROUP LEADER	STRESS GROUP	LIAISON ENGRG	PROJ ENGRG	

PRIORITY: C

DRAWING TITLE: LINES INSTL ELECTRICAL A/S MID-SECTION - INTERNAL

DRAWING NO: LDW280-52358

EO NO.: B3

ISSUED BY HUGH RYAN X1392 SECTION VDI (EQUIP LINES) GROUP NO. 332 PL 25

01

NAS 9-1100

01 NAS 9-1100

ENG 32.2 REV 3-65

GRUMMAN AIRCRAFT ENGINEERING CORP.
CODE IDENT NO. 26512
ENGINEERING ORDER

DWG. NO. LDW280-52358 | EO NO. B4
CONTROL INFO NO. LDW280A 7734

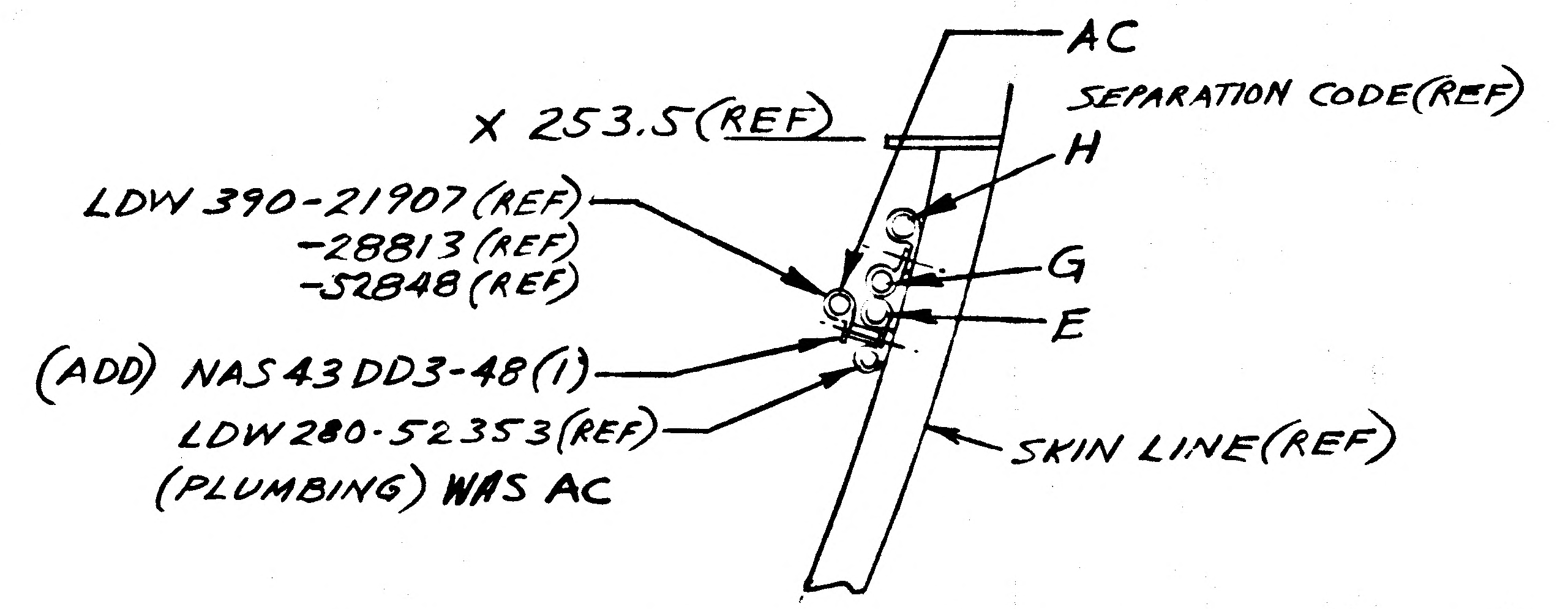
AC
SEPARATION CODE(REF)
H
G
E
X 253.5(REF)
LDW 390-21907(REF)
-28813(REF)
-52848(REF)
(ADD) NAS43DD3-48(1)
LDW280-52353(REF)
(PLUMBING) WAS AC
SKIN LINE(REF)

(ADD) SECTION ✱-✱ (NEXT AVAILABLE SECTION LETTERS)

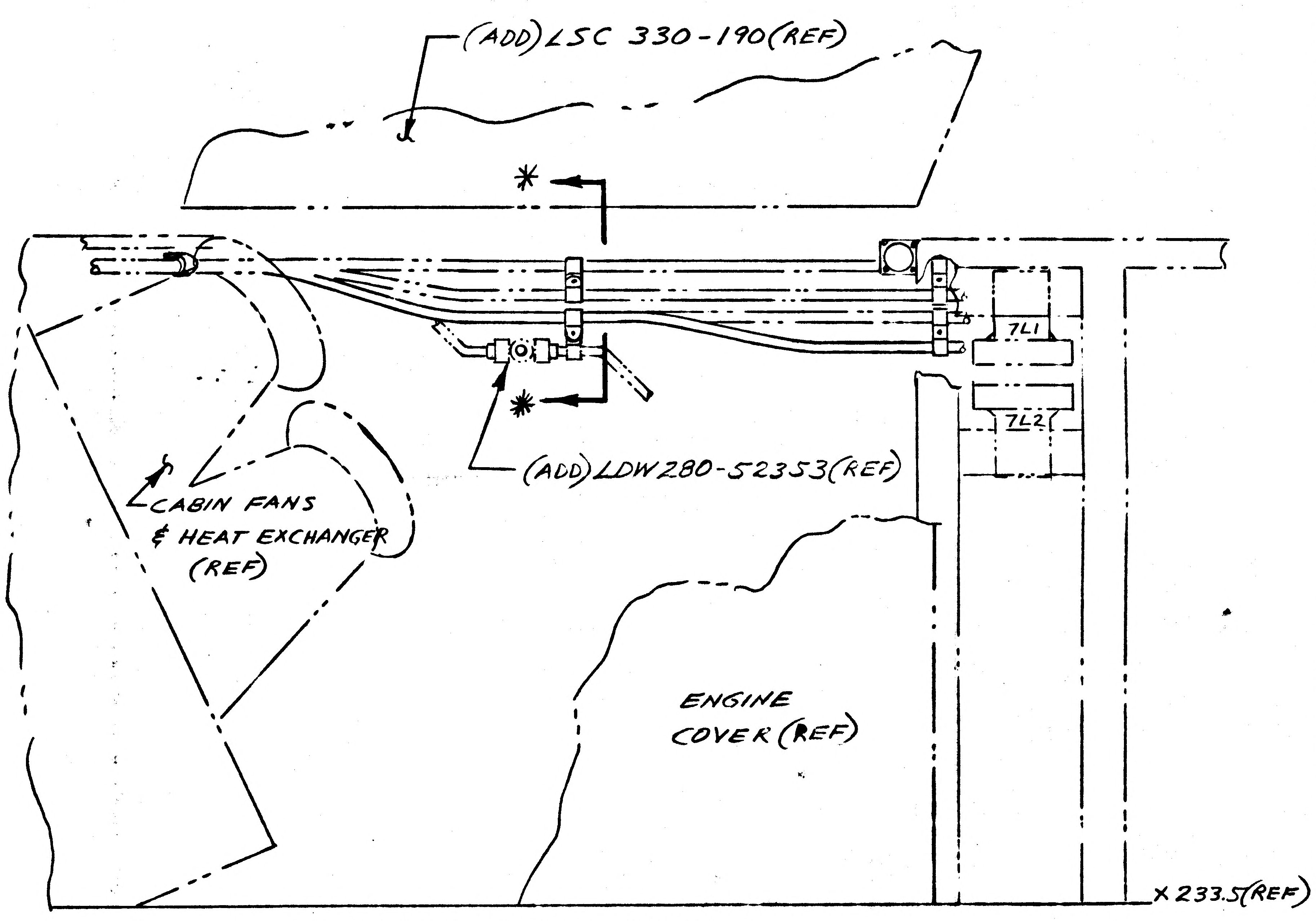
(ADD) LSC 330-190(REF)
✱
✱
(ADD) LDW280-52353(REF)
7L1
7L2
CABIN FANS
& HEAT EXCHANGER
(REF)
ENGINE
COVER(REF)
X 233.5(REF)

VIEW LKG OUTBD R.H. SIDE

REVISE PICTURE AS SHOWN & ADD SECTION ✱✱

ON-1 INSTL
IN F/D & B/M ADDED NAS43DD3-48(1) SPACER

NOTE: ✱✱ ADD NEXT AVAILABLE SECTION LETTER

DETAIL SPEC REQ ☐ | CL II ENGRG CHG ☑ | CL I ENGRG CHG ☐ | LCD 1516 | 5

REASON FOR EO: TO PROVIDE FOR LINES INSTL FOR WATER ACCUMULATOR

DESCRIPTION OF EO: ON-1 INSTL IN F/D & B/M ADDED NAS43DD3-48(1) & ON F/D REVISED VIEW LKG OUTBD R/S AND ADDED SECTION ✱-✱ & LSC 330-190(REF) LDW280-52353(REF)

GAEC EO RELEASE: JK 6/30/7 C

MODEL	PROCURING ACTIVITY NO.	GAEC UNIT NO.	SUB CONTR UNIT NO.
LM		LM2 (32)	

DRAWING CHANGE REQD: REVISE DWG	RECORD EO	DISPOSITION OF PARTS: REWORK	SCRAP
✓		✓	

	VDI	SUPPORT	RELIAB. GROUP	GROUP LEADER	STRESS GROUP	LIAISON ENGRG	PROJ ENGRG	GOVT
APPROVED BY	JAP			JW	EW		WHB	Botts
DATE	6/27/67			6/27/67	6/28/67		6/28	6-29-67

PRIORITY: C
DRAWING TITLE: LINES INSTL - ELECTRONIC INTERNAL MID SECTION
DRAWING NO.: LDW280-52358
EO NO.: B4

ISSUED BY L. BALDASSIN X1153 SECTION EQUIP LINES GROUP NO. 332 PL 25

ENG 32.2 REV 3-65 B

GRUMMAN AIRCRAFT ENGINEERING CORP.
CODE IDENT NO. 26512
ENGINEERING ORDER

DWG. NO. LDW280-52358 EO NO. B6
CONTROL INFO NO. LDW280A 7858

ON -1 INSTL IN F/D ADD REF CALLOUTS FOR CABLE ASSY AS SHOWN

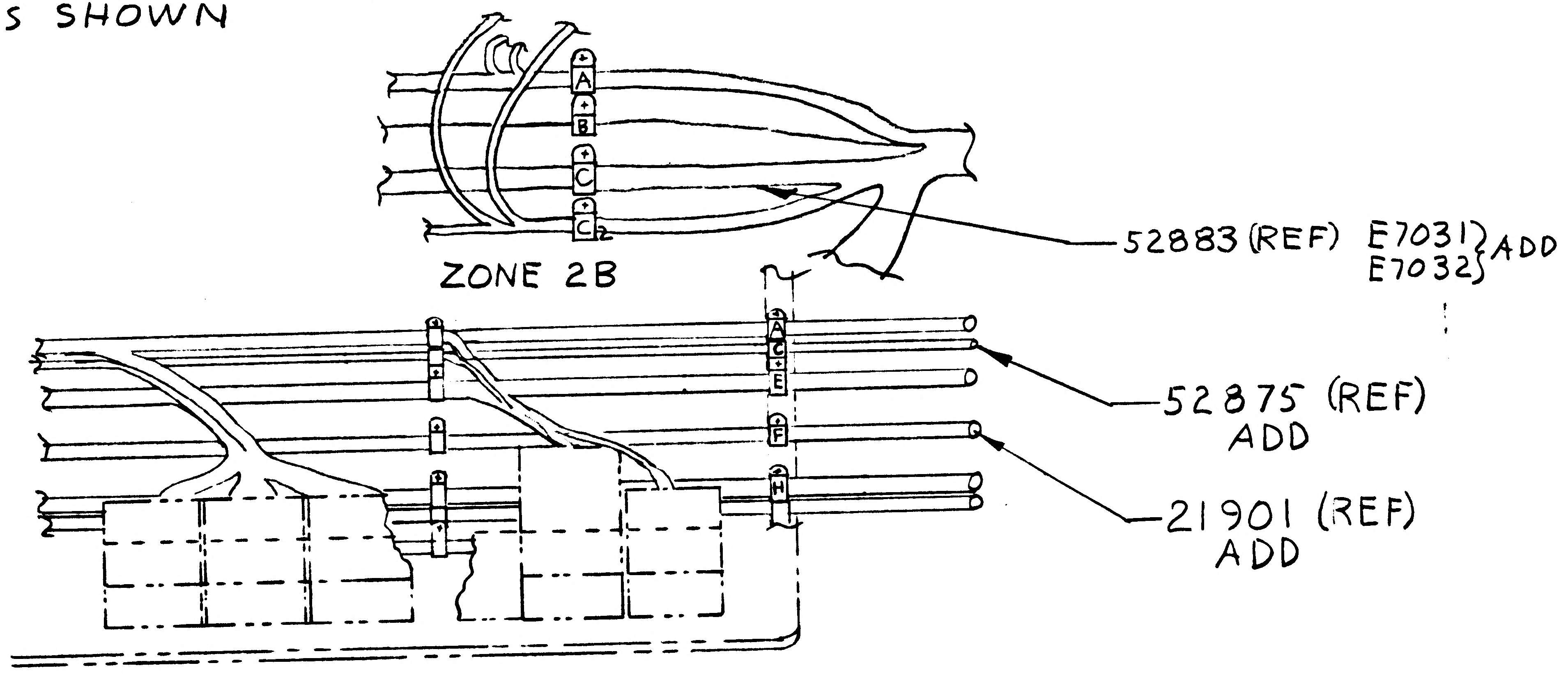

A
B
C
C
ZONE 2B
52883 (REF) E7031 E7032 ADD
A
C
E
F
H
52875 (REF) ADD
21901 (REF) ADD

VIEW LOOKING OUTB'D L.H. SIDE
SHEET 4.00 ZONE 2A

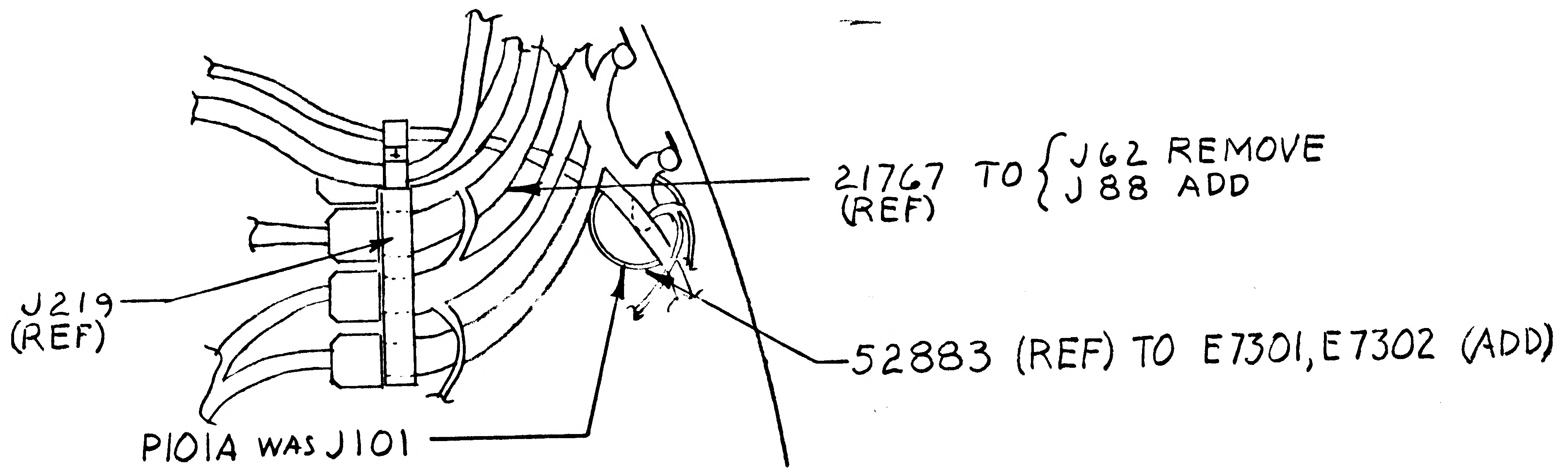

21767 (REF) TO { J62 REMOVE J88 ADD
J219 (REF)
52883 (REF) TO E7301, E7302 (ADD)
P101A WAS J101

VIEW LOOKING AFT -Z27 BHD SHEET 4.00 ZONE 6C

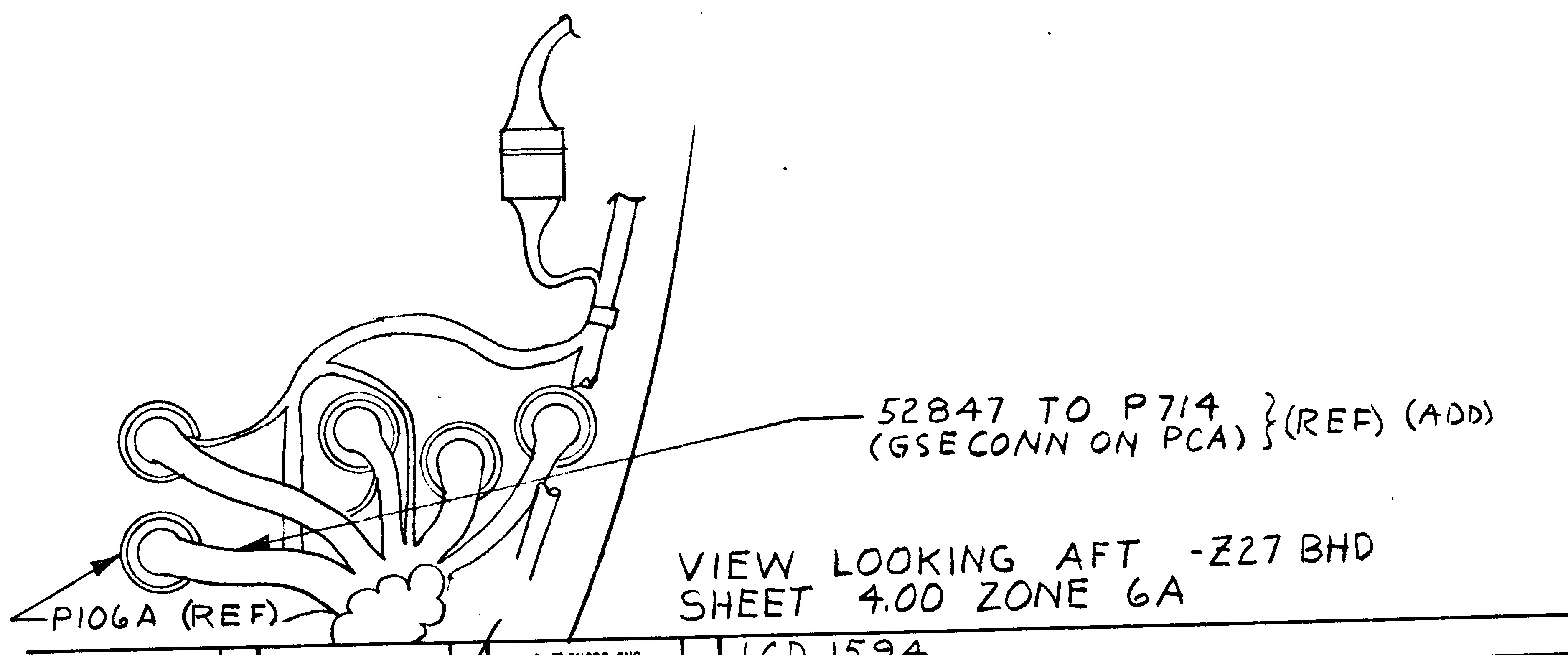

52847 TO P714 (GSE CONN ON PCA) } (REF) (ADD)
P106A (REF)

VIEW LOOKING AFT -Z27 BHD
SHEET 4.00 ZONE 6A

DETAIL SPEC REQ	CL II ENGRG CHG	CL I ENGRG CHG ✓	LCD 1594

REASON FOR EO: TO PROVIDE LM-2 WITH CAPABILITY FOR UNMANNED (LM-1) MISSION

DESCRIPTION OF EO: IN VIEW LKG OUTB'D LH SIDE SH4 ZN 2A & VIEW LKG AFT -Z27 BHD ADDED CABLE ASSY CALLOUTS

GAEC EO RELEASE

MODEL	PROCURING ACTIVITY NO.	GAEC UNIT NO.	SUB CONTR UNIT NO.
LM		LM-2 (32	

DRAWING CHANGE REQD: REVISE DWG ✓ RECORD EO
DISPOSITION OF PARTS: REWORK ✓ SCRAP

APPROVED BY: DATE 7/20/67

SUPPORT	RELIAB. GROUP	GROUP LEADER	STRESS GROUP	LIAISON ENGRG	PROJ ENGRG
VDI		7/20/67	7/24	7/24	7-22-67

PRIORITY: C
DRAWING TITLE: LINES INSTL ELECTRONIC ASCENT STAGE - INTERNAL
DRAWING NO.: LDW280-52358
EO NO.: B6

7-20-67
ISSUED BY HUGH RYAN X1392 7-19-67 SECTION VDI (EQUIP LINES) GROUP NO. 332 PL. 25

01

NAS 9-1100

B

GRUMMAN AIRCRAFT ENGINEERING CORP.
CODE IDENT NO. 26512
ENGINEERING ORDER

DWG. NO.	LDW280-52358	EO NO.	B7
CONTROL INFO NO.	LDW280A-8035		

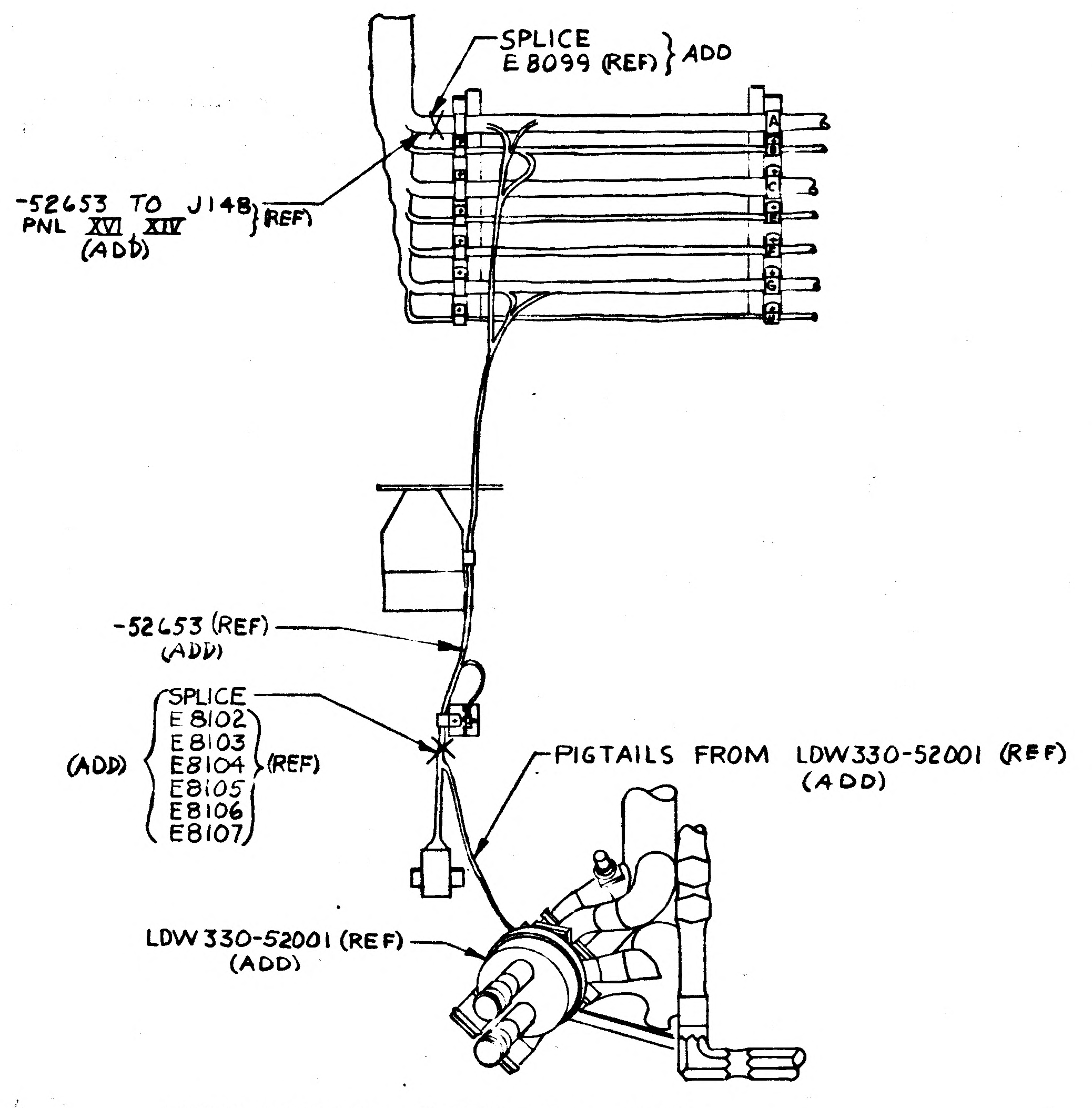
SPLICE
E 8099 (REF) } ADD
-52653 TO J148
PNL XVI XIV } (REF)
(ADD)
A
C
F
G
-52653 (REF)
(ADD)
SPLICE
(ADD) { E8102
E8103
E8104 } (REF)
E8105
E8106
E8107
PIGTAILS FROM LDW330-52001 (REF)
(ADD)
LDW330-52001 (REF)
(ADD)

VIEW LOOKING OUTB'D R.H SIDE
SH 4.00 ZONE 11C

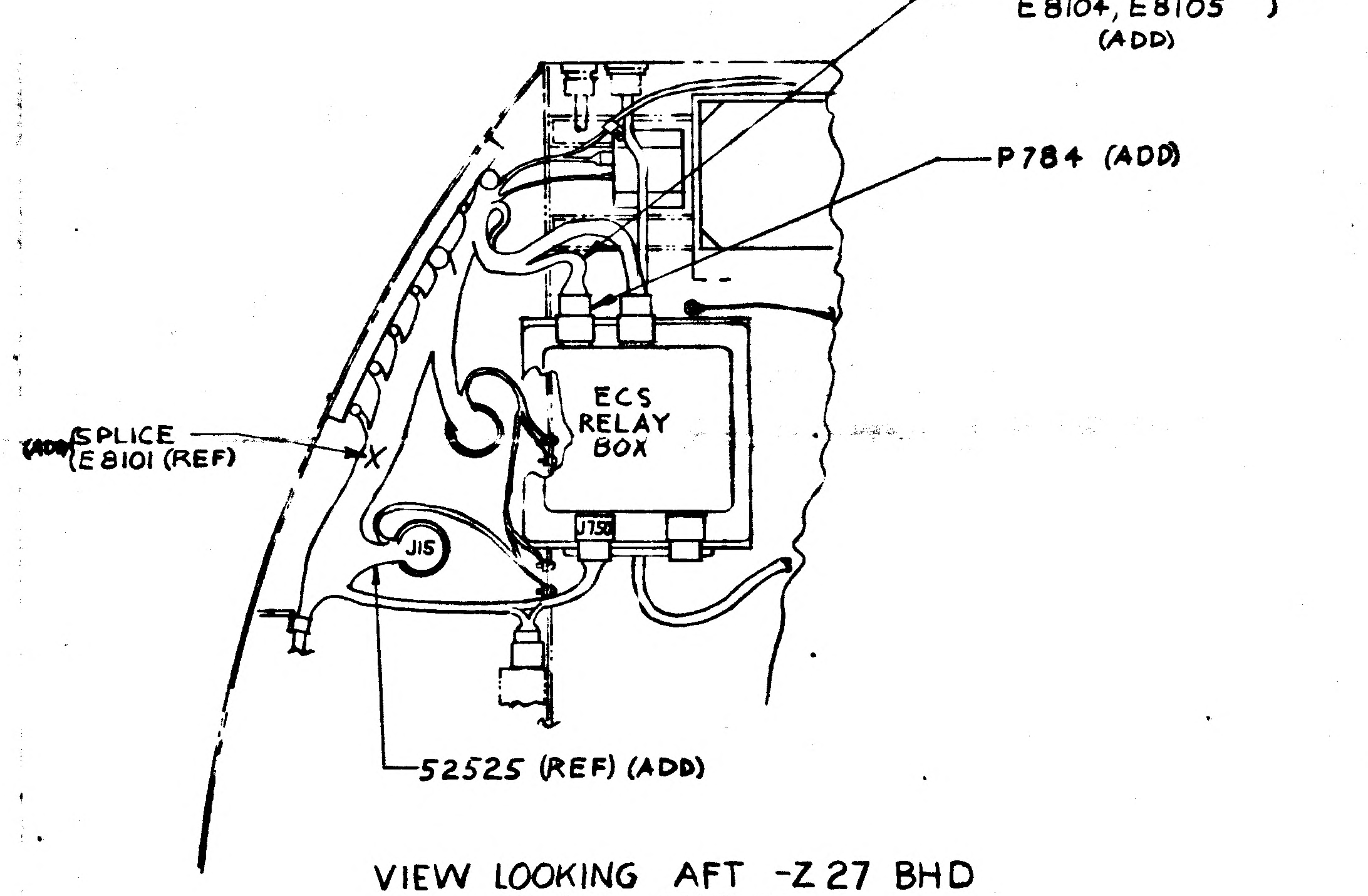
52653 TO J148,
E8102, E8103,
E8104, E8105 } REF
(ADD)
P784 (ADD)
(ADD) SPLICE
E8101 (REF)
ECS
RELAY
BOX
J750
J15
52525 (REF) (ADD)

VIEW LOOKING AFT -Z27 BHD
SH 4.00 ZONE 8D

NOTES

2. ALL CONNECTOR NUMBERS SHALL BE PLACED ON STRUCTURE ADJACENT TO THE RESPECTIVE CONNECTOR PER LSP-14-002, TYPE VII, CLASS 2. MARK WITH 3/16 HIGH LETTERS.
5. SPECIFICATION LSP390-002 SHALL BE USED IN CONJUNCTION WITH THIS INSTALLATION.
14. SELECTION & INSTALLATION OF LINE CLAMPS, CLAMP ATTACHING HARDWARE, ANTI-CHAFE SLEEVE, GROMMETS, LOCKWIRE & STRUCTURAL SUPPORT BONDING SHALL BE IN ACCORDANCE WITH LPC280-23 EXCEPT AS NOTED.

8. MS21919WDH CLAMPS & GC500S CLAMPS ARE INTERCHANGEABLE & EITHER MAY BE USED IN THIS INSTL.
11. SUBSTITUTION OF NAS1132*, AN525-832R*, OR AN525-832* BOLTS FOR THE GB511J-08-* BOLT IS PERMISSIBLE.
9. ALL CABLE NUMBERS ARE NUMBERS OF LDW390 AND ARE SHOWN FOR REF ONLY.

DETAIL SPEC REQ ☐ CL II ENGRG CHG ☐ CL I ENGRG CHG ☒ LCD 1855

REASON FOR EO: ADD TORN SUIT PROTECTION

DESCRIPTION OF EO: ON-1 INSTL ADDED P784, SPLICES E8099 REF., E8101 REF. THRU E8107 REF.; 52653 REF., 52525 REF.

GAEC EO RELEASE: C

MODEL	PROCURING ACTIVITY NO.	GAEC UNIT NO.	SUB CONTR UNIT NO.
LM		LM-2(32)	

DRAWING CHANGE REQD: REVISE DWG ✓ RECORD EO
DISPOSITION OF PARTS: REWORK ✓ SCRAP

APPROVED BY		SUPPORT	RELIAB. GROUP	GROUP LEADER	STRESS GROUP	LIAISON ENGRG	PROJ ENGRG	
DATE	7/26/67			7/26/67	7-27		7-27	7-29-67
	VDI							

PRIORITY: C
DRAWING TITLE: LINES INSTL. ELECTRONIC ASCENT STAGE-MID SECT-INTERNAL
DRAWING NO.: LDW280-52358
EO NO.: B7

ISSUED BY HUGH RYAN X1392 7-26-67 SECTION VDI(EQUIP LINES) GROUP NO. 332 PL 25

01
NAS 9-1100

B

ENG 32.1 REV 3-65

GRUMMAN AIRCRAFT ENGINEERING CORP.
CODE IDENT NO. 26512
ENGINEERING ORDER

*

DWG. NO.	LDW280-52358	EO NO.	B8
CONTROL INFO NO.	LM 5-15806		

THIS IS A REVISION OF EO "B6".

ON-1

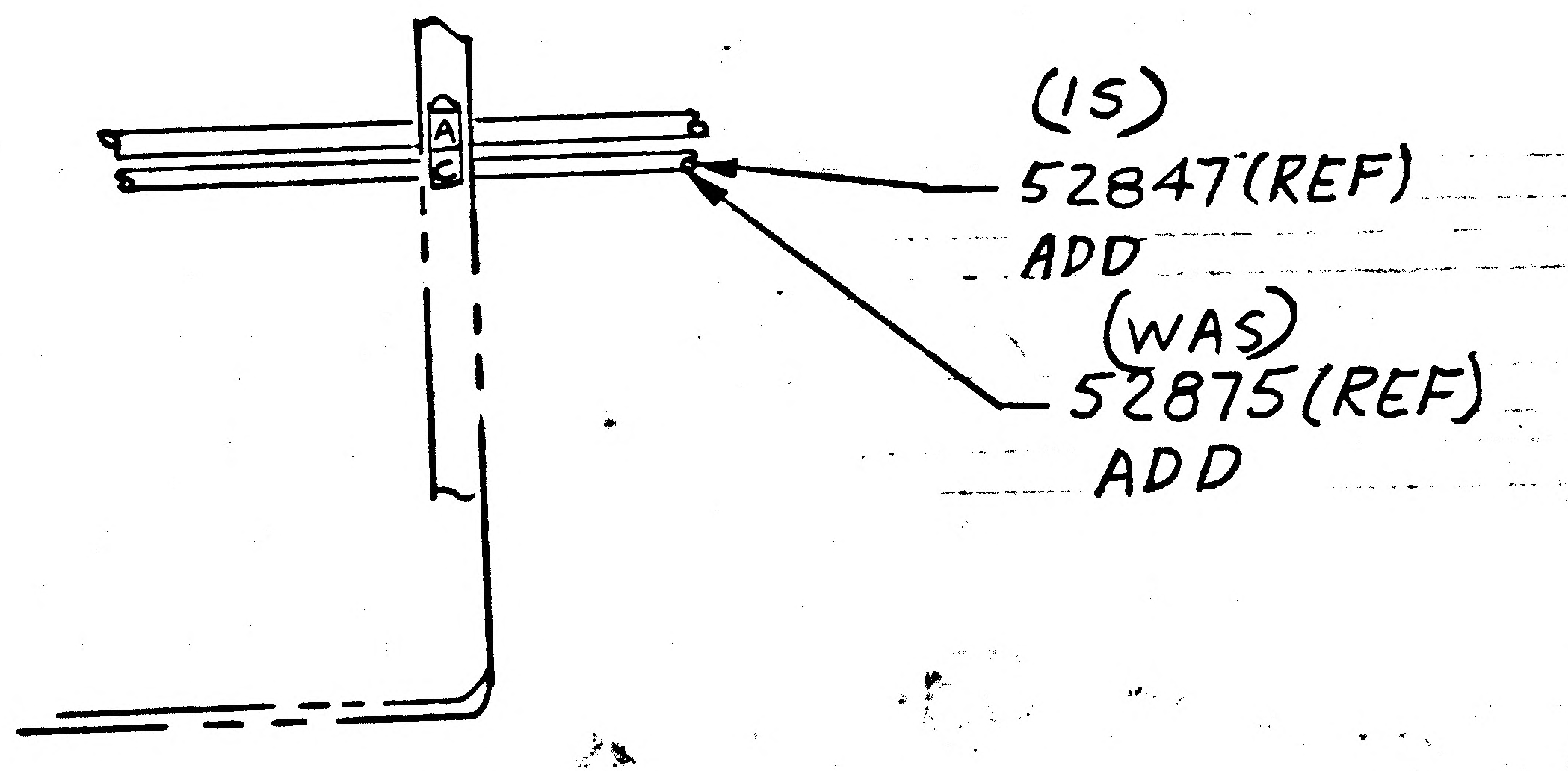

VIEW LKG OUTBD LH SIDE
SH 4 ZONE 2A

RELEASED BY LIAISON

DETAIL SPEC REQ	☐	CL II ENGRG CHG	✓	CL I ENGRG CHG	☐

5

REASON FOR EO	DESCRIPTION OF EO	② GAEC EO RELEASE
ENG ERROR	REF EO B6 ON-1 52847 (REF) WAS 52875 (REF)	C JK

MODEL	EFFECTIVITY		
	PROCURING ACTIVITY NO.	GAEC UNIT NO.	SUB CONTR UNIT NO.
LM		LM2(32)	

DRAWING CHANGE REQD		DISPOSITION OF PARTS	
✓		✓	
REVISE DWG	RECORD EO	REWORK	SCRAP

APPROVED BY	JaP			—		CF		
DATE	8/14/67			—	8-2-67	8-2-67	8/14/67	8/2/67
VDI	VDI	SUPPORT	RELIAB. GROUP	GROUP LEADER	STRESS GROUP	LIAISON ENGRG	PROJ ENGRG	~~GOVT~~

PRIORITY	DRAWING TITLE	DRAWING NO.	EO NO.
C	LINES INSTALLATION ASCENT STAGE - MS INTERNAL	LDW280-52358	B8

ISSUED BY LIAISON ROSADO x86454 SECTION EQUIP LINES GROUP NO. 332 PL 5

01 NAS 9-1100

B

GRUMMAN AIRCRAFT ENGINEERING CORP.
CODE IDENT NO. 26512
ENGINEERING ORDER

DWG. NO. LDW280-52358		EO NO. B10
CONTROL INFO NO. LM5-13577		

ENG 32.2 REV 3-66

ON-1
IN F/D

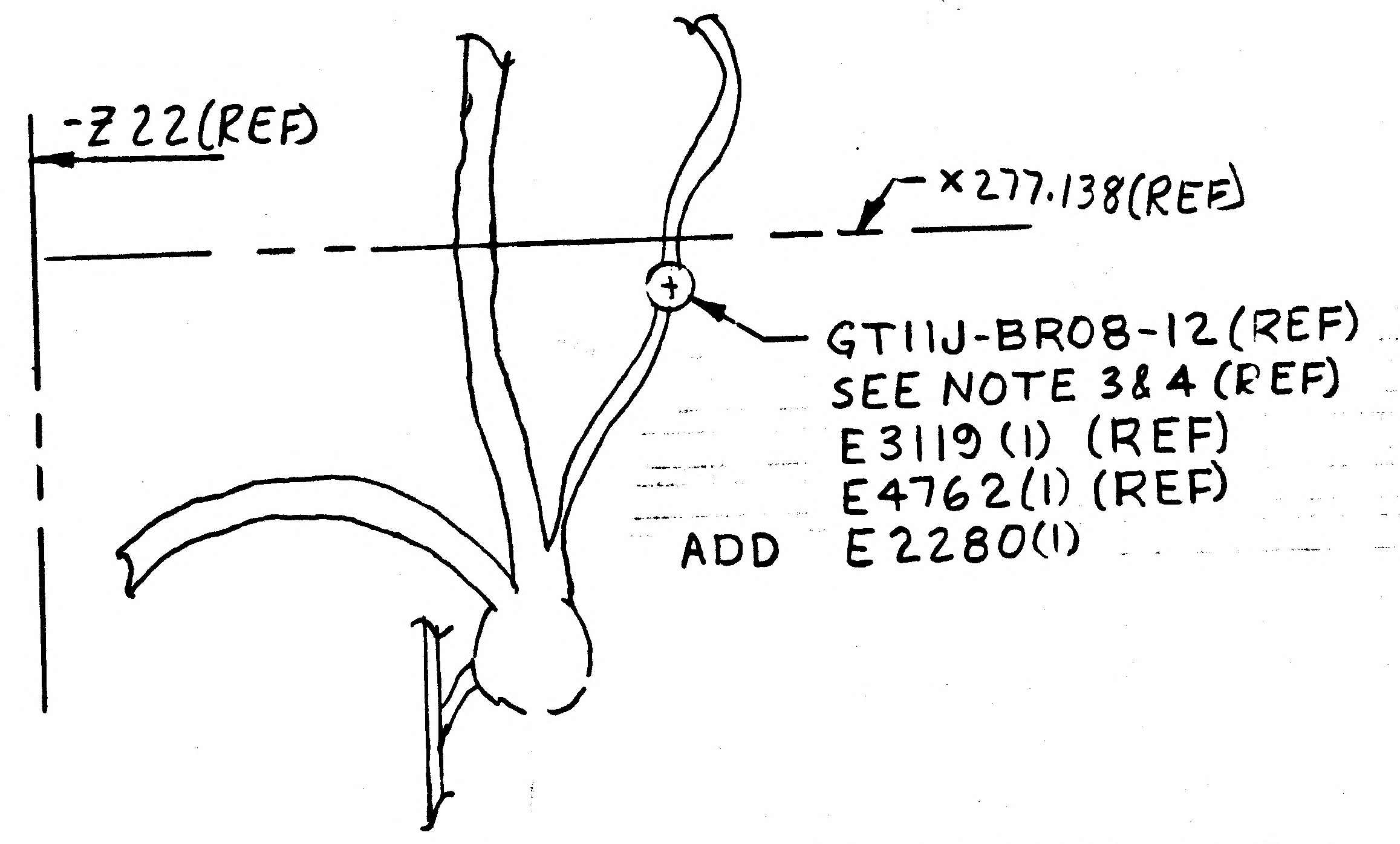
-Z22(REF)
X277.138(REF)
GT11J-BR08-12(REF)
SEE NOTE 3&4 (REF)
E3119(1) (REF)
E4762(1) (REF)
ADD E2280(1)

VIEW LOOKING OUTBD LH SIDE
ZONE 5C SH4

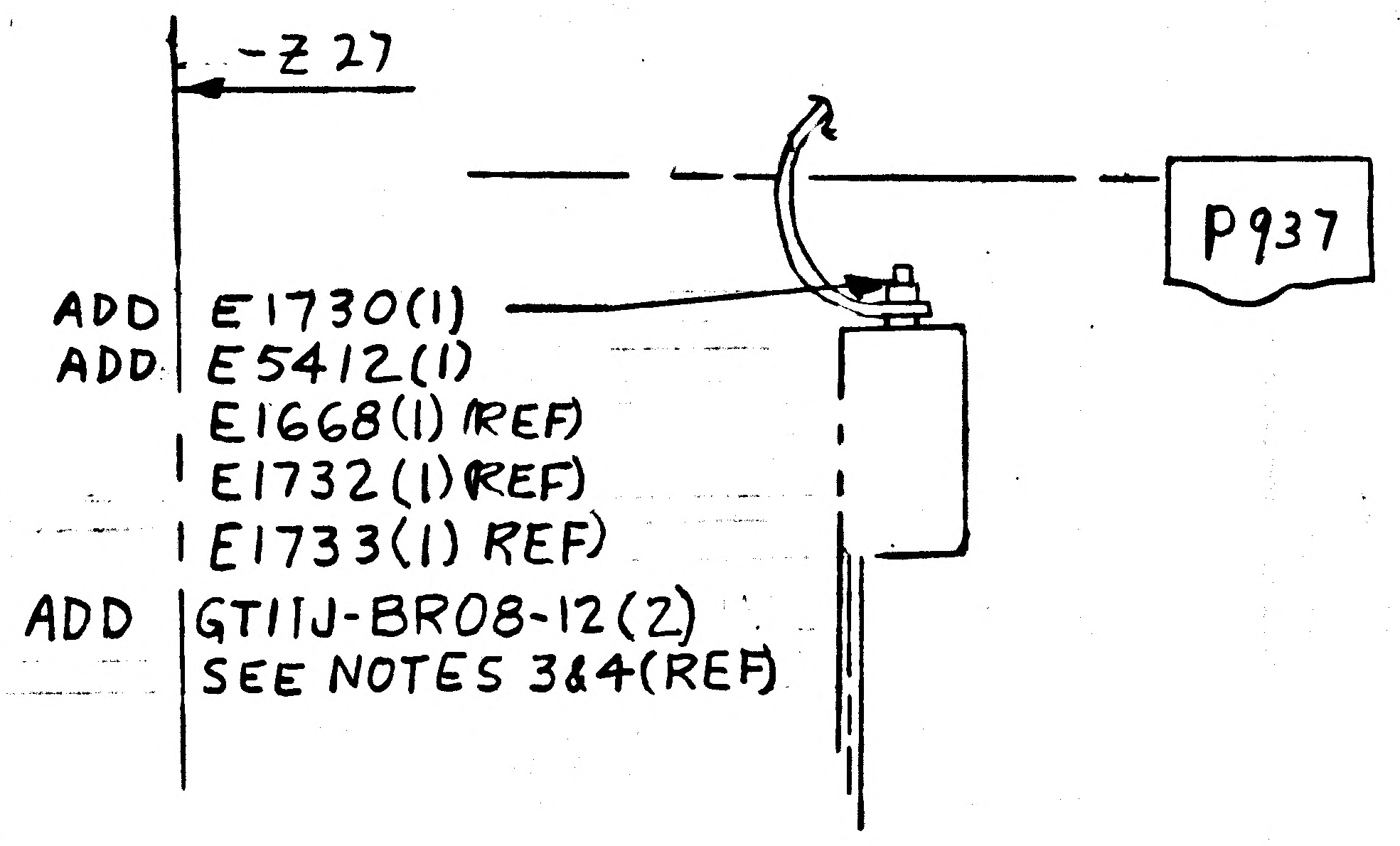
-Z27
P937
ADD E1730(1)
ADD E5412(1)
E1668(1) REF
E1732(1) REF
E1733(1) REF
ADD GT11J-BR08-12(2)
SEE NOTES 3&4(REF)

VIEW LOOKING OUTBD LH SIDE
ZONE 5A SH4

RELEASED BY LIAISON

DETAIL SPEC REQ		CL II ENGRG CHG	✓	CL I ENGRG CHG	

REASON FOR EO	DESCRIPTION OF EO	GAEC EO RELEASE
NEW GROUNDS ADDED	IN F/D ON-1 ADDED E2280(1), E1730(1) E5412(1), GT-11J-BR08-12(2) WAS(1)	5 C JK

MODEL	EFFECTIVITY			DRAWING CHANGE REQD		DISPOSITION OF PARTS									
	PROCURING ACTIVITY NO.	GAEC UNIT NO.	SUB CONTR UNIT NO.	REVISE DWG	RECORD EO	REWORK	SCRAP	APPROVED BY / DATE							
				✓		✓		JaP 8/17/67					DV 8/17/67	DV 8/17/67	8/17/67
LM		LM2(32)						VDI	VDI	SUPPORT	RELIAB. GROUP	GROUP LEADER	STRESS GROUP	LIAISON ENGRG	PROJ ENGRG

PRIORITY	DRAWING TITLE	DRAWING NO.	EO NO.
C	LINES INSTALLATION ELECTRONIC-ASCENT STAGE TUNNEL	LDW280-52358	B10

ISSUED BY ROSADO 86454 SECTION EQUIP LINES GROUP NO. 332 PL 5

01
NAS 9-1100

B

ENG 32.1 REV 3-65

GRUMMAN AIRCRAFT ENGINEERING ~~CO~~RP.
CODE IDENT NO. 26512
ENGINEERING ORDER
*

DWG. NO. LDW280-52358		EO NO.	C1
CONTROL INFO NO. LDW280A-8878			

ON-1 INSTL

IN F/D & B/M CHANGE PART NUMBER OF
MIT HARNESS "A"
6010677 (WAS) 6010670

DETAIL SPEC REQ		CL II ENGRG CHG	✓	CL I ENGRG CHG		LCD 2018 ok 5

REASON FOR EO	DESCRIPTION OF EO	GAEC EO RELEASE
UPDATING OF PART NUMBERS FOR PGNS GFE	ON-1 INSTL IN F/D & B/M 6010677 WAS 6010670	JK 8/25/67

MODEL	EFFECTIVITY			DRAWING CHANGE REQD		DISPOSITION OF PARTS		APPROVED BY								
	PROCURING ACTIVITY NO.	GAEC UNIT NO.	SUB CONTR UNIT NO.					DATE	8/21/67			8/21/67	8-23		8/23/67	8-24-67
LM		LM-2 (32)		REVISE DWG ✓	RECORD EO	REWORK ✓	SCRAP		VD1	SUPPORT	RELIAB. GROUP	GROUP LEADER	STRESS GROUP	LIAISON ENGRG	PROJ ENGRG	~~DATE~~

PRIORITY	DRAWING TITLE	DRAWING NO.	EO NO.
C	LINES INSTL-ELECTRONIC A/S MIDSECTION INTERNAL	LDW280-52358	C1

8-25-67
ISSUED BY L. BALDASSIN X1392 SECTION EQUIP LINES GROUP NO. 332 PL 25

01

NAS 9-1100

RELEASED BY LIAISON

GRUMMAN AIRCRAFT ENGINEERING CORP.
CODE IDENT NO. 26512
ENGINEERING ORDER

DWG. NO. LDW280-52358 EO NO. C2
CONTROL INFO NO. LM5-13624

THIS EO IS A REVISION OF EO B5
ON -1 INSTL REROUTE EMI "A" CABLES AS SHOWN

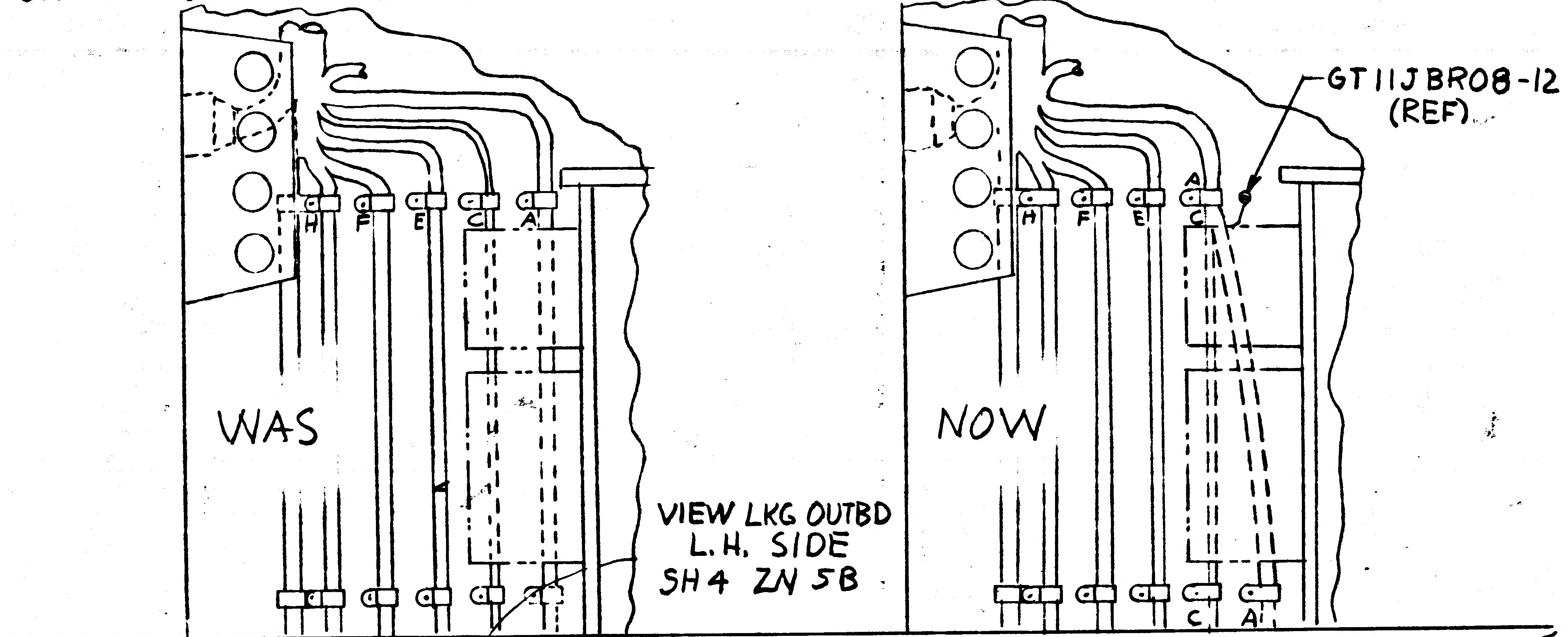

DETAIL SPEC REQ		CL II ENGRG CHG	✓	CL I ENGRG CHG	LCD 1078

REASON FOR EO: TO PROTECT WIRES FROM GROUND STUD

DESCRIPTION OF EO: ON -1 INSTL REROUTED EMI "A" CABLES

GAEC EO RELEASE: JK 5

MODEL	PROCURING ACTIVITY NO.	GAEC UNIT NO.	SUB CONTR UNIT NO.
LM		LM-2 (32)	

DRAWING CHANGE REQD: REVISE DWG ✓ RECORD EO
DISPOSITION OF PARTS: REWORK ✓ SCRAP

	VDI	SUPPORT	RELIAB. GROUP	GROUP LEADER	STRESS GROUP	LIAISON ENGRG	PROJ ENGRG
APPROVED BY				S			
DATE	9/8/67				9/5/67	9-6-67	9/12/67	9/6/67

PRIORITY: C
DRAWING TITLE: LINES INSTL ELECTRONIC A/S - MID SECT - INTERNAL
DRAWING NO.: LDW280-52358
EO NO.: C2

ISSUED BY HUGH RYAN X1392 9-1-67 SECTION VDI (EQUIP LINES) GROUP NO. 332 PL 5

01
NAS 9-1100

B

ENG 32.1 REV 3-65

GRUMMAN AIRCRAFT ENGINEERING CORP.
CODE IDENT NO. 26512
ENGINEERING ORDER

DWG. NO. LDW280-52358
EO NO. C3
CONTROL INFO NO. LDW280A-9043

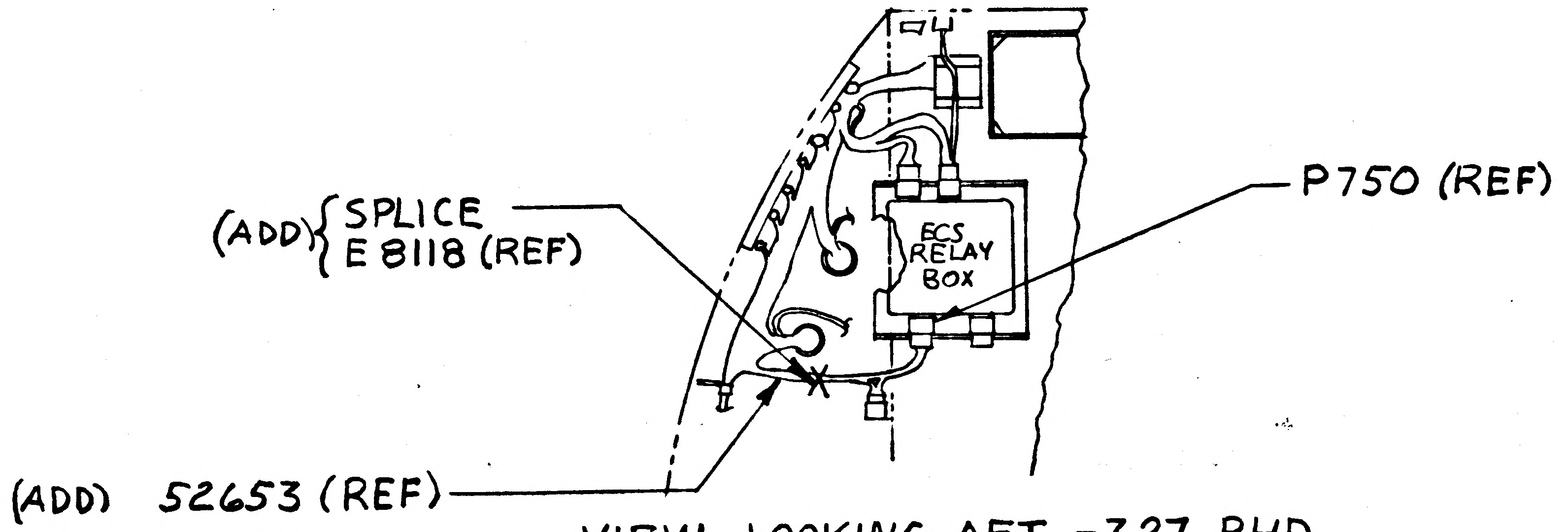

VIEW LOOKING AFT -Z27 BHD
SHEET 4.00 ZONE 8D

NOTE:- ALL CABLE NUMBERS ARE NUMBERS OF LDW390 AND ARE SHOWN FOR REF ONLY

DETAIL SPEC REQ	☐	CL II ENGRG CHG	☐	CL I ENGRG CHG	☒	LCD 1855	5

REASON FOR EO: ADD TORN SUIT PROTECTION

DESCRIPTION OF EO: ON -1 INSTL ADDED SPLICE E8118 REF., & CABLE ASSY CALLOUT 5 653 REF.

Ⓡ GAEC EO RELEASE: JK 9/7/7

MODEL	PROCURING ACTIVITY NO.	GAEC UNIT NO.	SUB CONTR UNIT NO.
LM		LM-2 (32)	

DRAWING CHANGE REQD: REVISE DWG	RECORD EO	DISPOSITION OF PARTS: REWORK	SCRAP
✓		✓	

APPROVED BY				JW	SW		WS		
DATE	9/5/67			9/5/67	9-9		9/6/67	9/6/67	
	VD1	SUPPORT	RELIAB. GROUP	GROUP LEADER	STRESS GROUP	LIAISON ENGRG	PROJ ENGRG	GOVT	

PRIORITY	DRAWING TITLE	DRAWING NO.	EO NO.
C	LINES INSTL ELECTRONIC ASCENT STAGE-MIDSECT-INTERNAL	LDW280-52358	C3

9/9
ISSUED BY HUGH RYAN X1392 9-5-67 SECTION VDI (EQUIP LINES) GROUP NO. 332 PL 25

01 NAS 9-1100

ENG 32.1 REV 3-65

GRUMMAN AIRCRAFT ENGINEERING CORP.
CODE IDENT NO. 26512
ENGINEERING ORDER

DWG. NO. LDW280-52358
EO NO. C4
CONTROL INFO NO. LDW280A-9288

ON-1 INSTL: IN F/D & B/M, REVISE CABLE CALLOUT AS SHOWN.

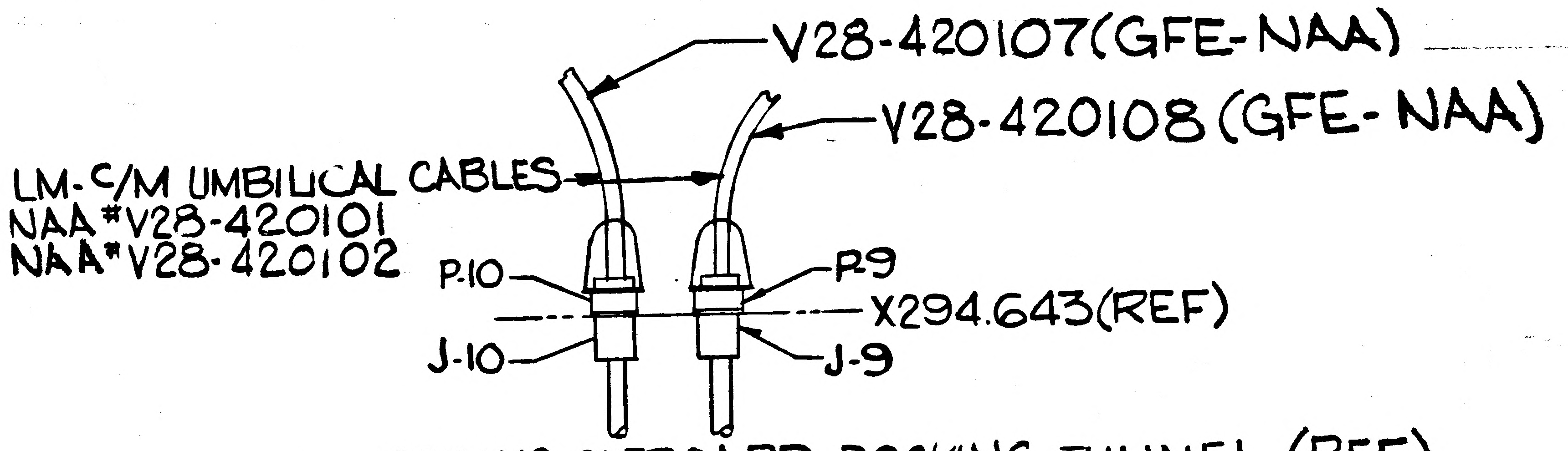
V28-420107(GFE-NAA)
V28-420108 (GFE-NAA)
LM-C/M UMBILICAL CABLES
NAA#V28-420101
NAA#V28-420102
P-10
P-9
X294.643(REF)
J-10
J-9

VIEW LKG OUTBOARD DOCKING TUNNEL (REF)
(VIEW LOCATED ON SH5, ZONE 21C)

DETAIL SPEC REQ	☐	CL II ENGRG CHG	☐	CL I ENGRG CHG	☑	LCD 1758

5

REASON FOR EO: PART NO CHANGE/DESIGN CHANGE

DESCRIPTION OF EO: ON-1: IN F/D & B/M, C/A V28-420107 WAS V28-420101, V28-420108 WAS V28-420102

GAEC EO RELEASE: JL 9-23-7

MODEL	PROCURING ACTIVITY NO.	GAEC UNIT NO.	SUB CONTR UNIT NO.
LM		LM-2(32	

DRAWING CHANGE REQD: ✓ REVISE DWG | RECORD EO

DISPOSITION OF PARTS: ✓ REWORK | SCRAP

APPROVED BY								
DATE	9/19/67			9/19/67			9/21	9/22/67
R	VDI	SUPPORT	RELIAB. GROUP	GROUP LEADER	STRESS GROUP	LIAISON ENGRG	PROJ ENGRG	~~GOVT~~

PRIORITY: C
DRAWING TITLE: LINES INSTL ELECTRONIC INTERNAL MID SECTION
DRAWING NO.: LDW280-52358
EO NO.: C4

ISSUED BY P.J. MARTELLO 9/23 x1153 SECTION YDI (EQUIP LINES) GROUP NO. 332 PL 25

01

NAS 9-1100

B

ENG 32.1 REV 3-65

GRUMMAN AIRCRAFT ENGINEERING CORP.
CODE IDENT NO. 26512
ENGINEERING ORDER

DWG. NO. LDW280-52358
EO NO. C5
CONTROL INFO NO. LM-5-14666

ON-1
F/D
ZONE A-10
SH.4.00

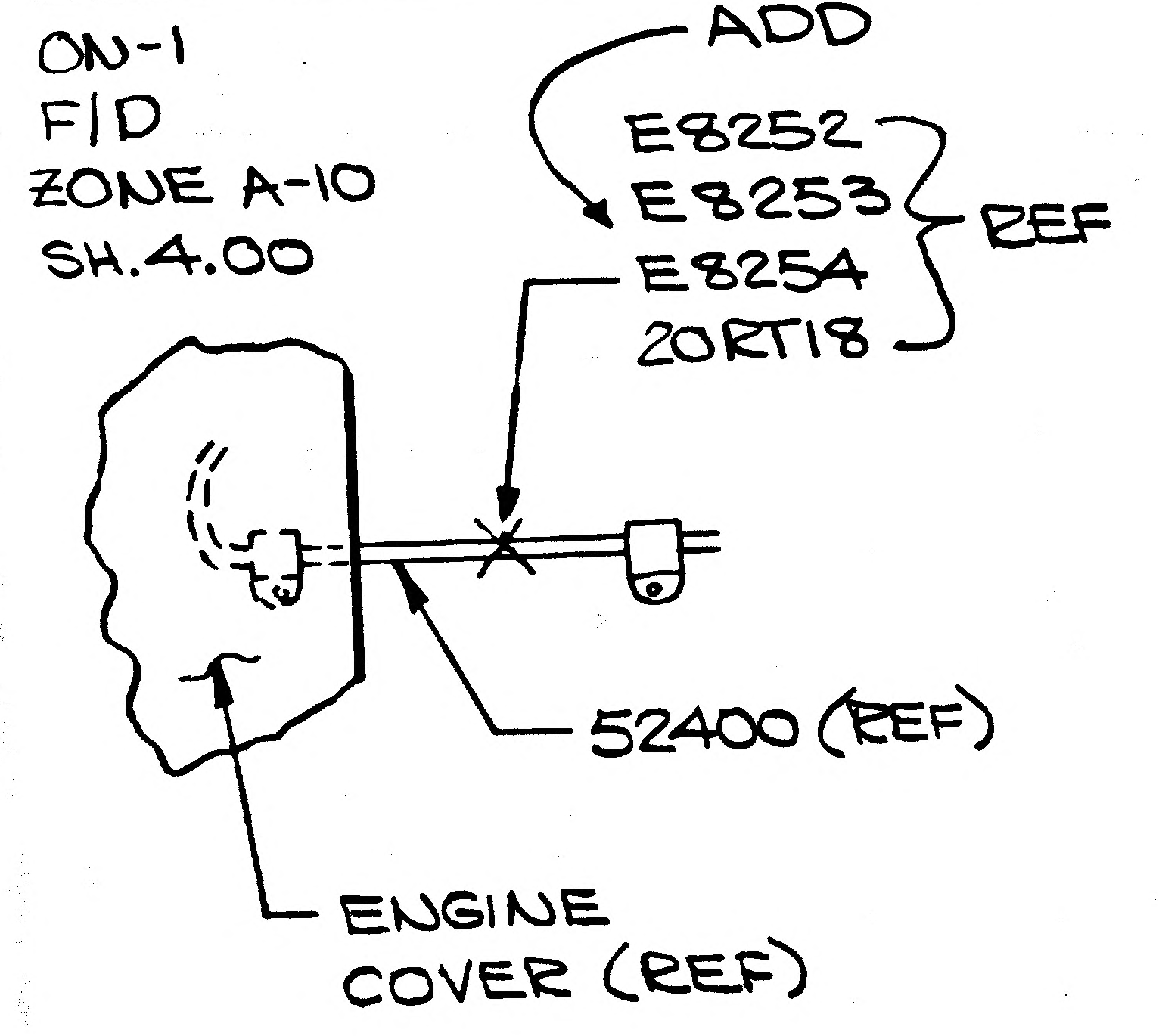
ADD
E8252
E8253
E8254
20RT18
REF
52400 (REF)
ENGINE
COVER (REF)

ON-1
F/D
SH. 5.00
ZONE B-12

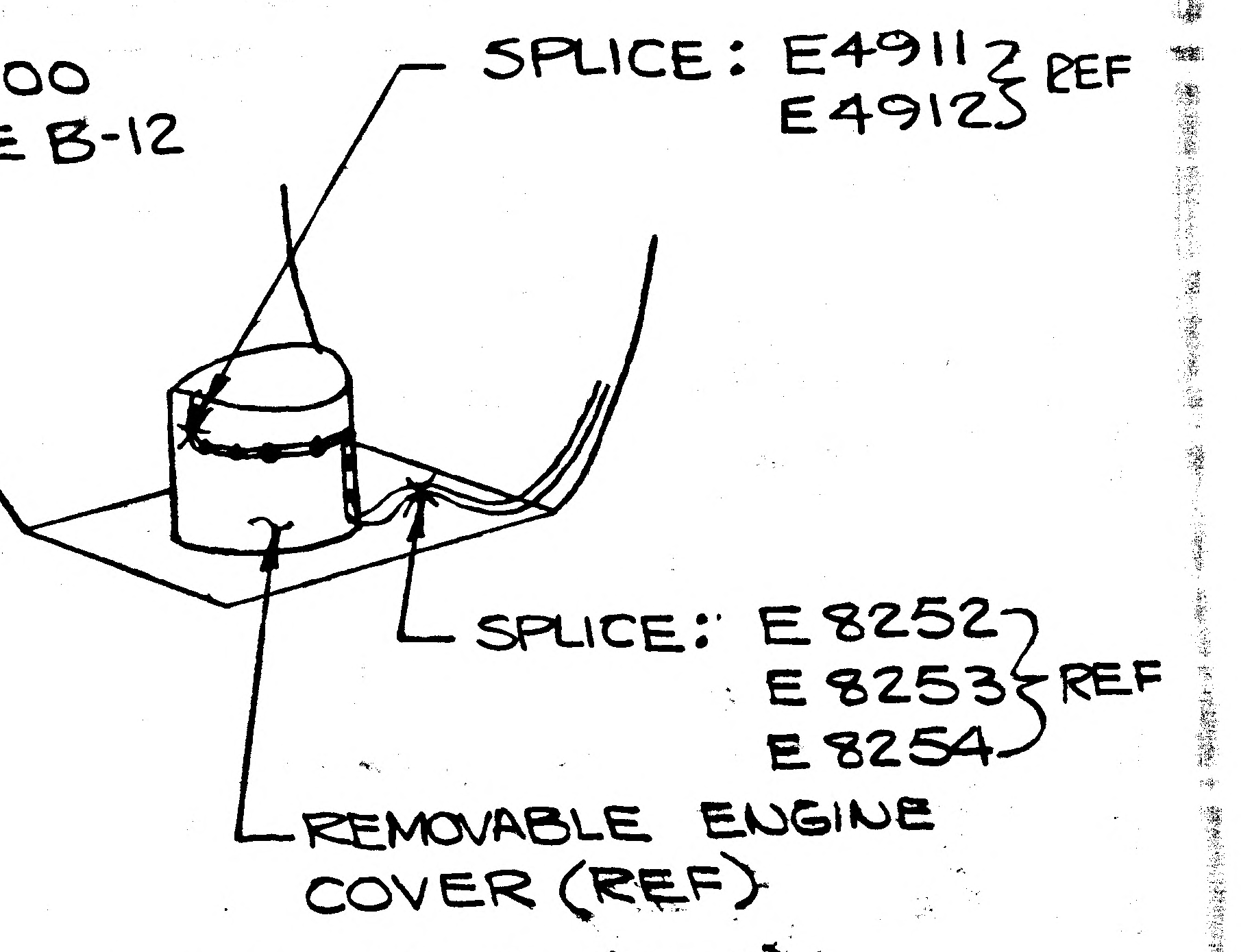
SPLICE: E4911
E4912
REF
SPLICE: E8252
E8253
E8254
REF
REMOVABLE ENGINE
COVER (REF)

VIEW S-S (REF)

RELEASED BY LIAISON

DETAIL SPEC REQ ☐ CL II ENGRG CHG ☑ CL I ENGRG CHG ☐

REASON FOR EO: TO FACILITATE REMOVAL OF ENGINE COVER

DESCRIPTION OF EO: ON-1 F/D ADDED E8252, E8253, E8254 Splices (REF)

GAEC EO RELEASE: JK

MODEL	EFFECTIVITY: PROCURING ACTIVITY NO.	GAEC UNIT NO.	SUB CONTR UNIT NO.
LM		LM-2 (32)	

DRAWING CHANGE REQD: V REVISE DWG / RECORD EO

DISPOSITION OF PARTS: Not Req'd REWORK / SCRAP

APPROVED BY				JW	JF	CR	WEB	
DATE	10/28/67			10-28	10-12-67	10/23/67	10/26/67	10/2/67
	VDI	SUPPORT	RELIAB. GROUP	GROUP LEADER	STRESS GROUP	LIAISON ENGRG	PROJ ENGRG	

PRIORITY: C

DRAWING TITLE: LINES INSTALLATION ELECTRONIC ASCENT STAGE - MIDSECT - INTERNAL

DRAWING NO.: LDW280-52358

EO NO.: C5

ISSUED BY LIAISON (H. BABCOCK) x86755 SECTION VDI GROUP NO. 280 PL 25

01

NAS 9-1100

ENG 32.1 REV 3-65

GRUMMAN AIRCRAFT ENGINEERING CORP.
CODE IDENT NO. 26512
ENGINEERING ORDER

*

DWG. NO.	LDW280-52358	EO NO.	C6
CONTROL INFO NO.	LDW280A-9962		

THIS IS A PARTIAL REVISION OF EO B7

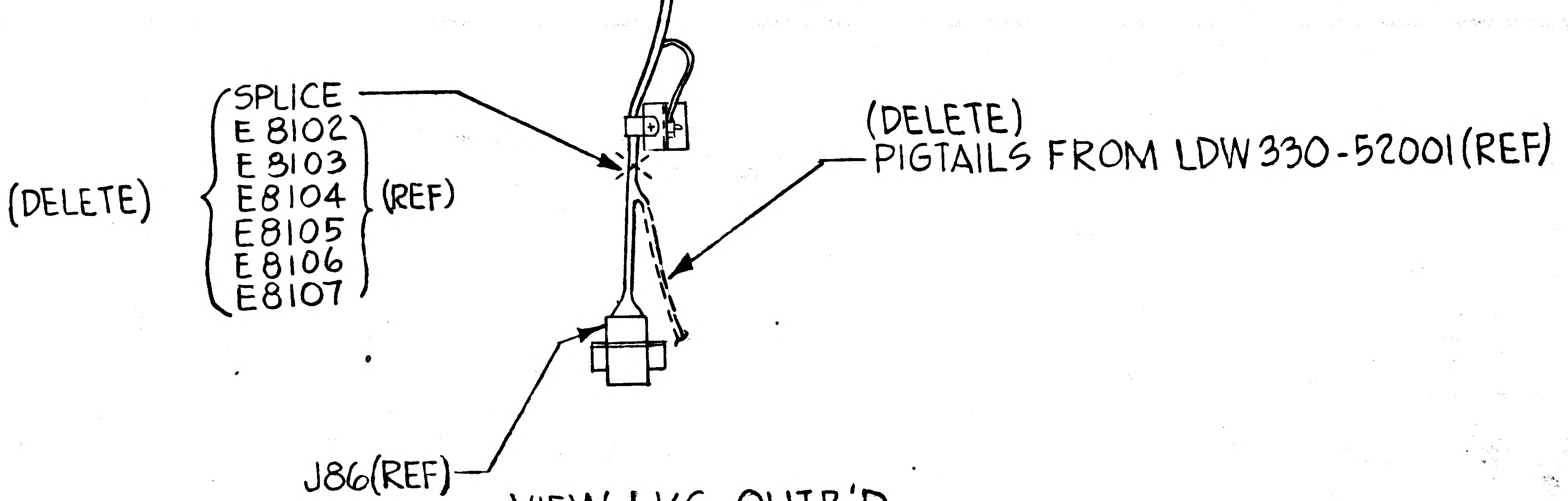

VIEW LKG OUTB'D
R H SIDE
SH4.00 ZONE 11C

DETAIL SPEC REQ	☐	CL II ENGRG CHG	☐	CL I ENGRG CHG	☑ LCD 2223 CCA745

REASON FOR EO: EQUIPMENT NOT NECESSAPY FOR UNMANNED MISSION

DESCRIPTION OF EO: ON -1 INSTL
EO IS A PARTIAL REV OF EO B7. DELETED SPLICES E8102 THRU E8107 & PIGTAILS(REF), AS SHOWN

GAEC EO RELEASE: VK 10/27/

MODEL	EFFECTIVITY: PROCURING ACTIVITY NO.	GAEC UNIT NO.	SUB CONTR UNIT NO.
LM		LM2(32)	

DRAWING CHANGE REQD: REVISE DWG	RECORD EO	DISPOSITION OF PARTS: REWORK	SCRAP
✓		✓	

	VDI	SUPPORT	RELIAB. GROUP	GROUP LEADER	STRESS GROUP	LIAISON ENGRG	PROJ ENGRG	~~GOVT~~
APPROVED BY	JAP			JW	SW			
DATE	10/20/67			10/26/67	10-23		10/20	10-27-67
B								

PRIORITY	DRAWING TITLE	DRAWING NO.	EO NO.
C	LINES INSTALLATION - ELECTRONIC ASCENT STAGE - M/S - INTERNAL	LDW280-52358	C6

10/28
ISSUED BY H. HELLER (X1154)(10-20-67) SECTION VDI(EQUIP LINES) GROUP NO. 332 PL 25

01

NAS 9-1100

GRUMMAN AIRCRAFT ENGINEERING CORP.
CODE IDENT NO. 26512
ENGINEERING ORDER

ENG 32.1 REV 3-65

DWG. NO. LDW 280-52358 | EO NO. C7
CONTROL INFO NO. LDW 280 B0124

ON-1 INSTL
IN F/D SH 5 ZONE 21D DELETE
"VIEW LKG OUTBD ~ DOCKING TUNNEL" IN ITS ENTIRETY
IN B/M REMOVE V28-420107 (1 REQD) V28-420108 (1 REQD)

DETAIL SPEC REQ		CL II ENGRG CHG		CL I ENGRG CHG	✓ LCD 2223 CCA 745

REASON FOR EO: PARTS NOT REQD FOR LM 2 MISSION

DESCRIPTION OF EO: ON-1 INSTL IN F/D REMOVED "VIEW LKG OUTBD-DOCKING TUNNEL" IN B/M REMOVED V28-420107 & V28-420108 (1 EA REQD)

GAEC EO RELEASE: JC 11/4/67

(5)

MODEL	PROCURING ACTIVITY NO.	GAEC UNIT NO.	SUB CONTR UNIT NO.
LM		LM-2 (32)	

DRAWING CHANGE REQD: REVISE DWG ✓ | RECORD EO
DISPOSITION OF PARTS: REWORK ✓ | SCRAP

APPROVED BY								
DATE	10/31/67			10/31/67	11-1		11/1/67	11-3-67
E	VD1	SUPPORT	RELIAB. GROUP	GROUP LEADER	STRESS GROUP	LIAISON ENGRG	PROJ ENGRG	

PRIORITY	DRAWING TITLE	DRAWING NO.	EO NO.
C	LINES INSTL - ELECT - MID SECTION INTERNAL	LDW 280-52358	C7

11/4
ISSUED BY L. BALDASSIN X 1392 SECTION EQUIP LINES GROUP NO. 332 PL 25

01

NAS 9-1100

ENG 32.1 REV 3-65

GRUMMAN AIRCRAFT ENGINEERING CORP.
CODE IDENT NO. 26512
ENGINEERING ORDER

DWG. NO. LDW280-52358	EO NO. D1
CONTROL INFO NO. LM 5-17281	

ON -1 INSTL ZONE 4-B SH. 4 & B/M.
IN VIEW LKG OUTBD L.H., ZONE 4-B.
REMOVE LDW 280-16030-25 ② REPLACE SAME WITH LDW280-16030-27 ② (NO PICTURE CHANGE REQ'D).

RELEASED BY LIAISON

DETAIL SPEC REQ		CL II ENGRG CHG	✓	CL I ENGRG CHG	

REASON FOR EO	DESCRIPTION OF EO	Ⓔ GAEC EO RELEASE
TO PRECLUDE CABLE DAMAGE DUE TO TIGHT CLAMP	ON -1 ADDED LDW280-16030-27 ② REMOVED LDW280-16030-25 ②	JK 5

MODEL	EFFECTIVITY: PROCURING ACTIVITY NO.	GAEC UNIT NO.	SUB CONTR UNIT NO.
LM		LM-2 (32)	

DRAWING CHANGE REQD: REVISE DWG	RECORD EO	DISPOSITION OF PARTS: REWORK	SCRAP
✓		✓	

	VDI	SUPPORT	RELIAB. GROUP	GROUP LEADER	STRESS GROUP	LIAISON ENGRG	PROJ ENGRG	~~GOVT~~
APPROVED BY	JAP			—	JFJ		JAP	
DATE	11/11/67			—	11-10-67	11-9-67	11/11/67	11-10-67

PRIORITY	DRAWING TITLE	DRAWING NO.	EO NO.
C5	LINES INSTALLATION ELECTRONIC ASCENT STAGE MID SECT-INTERNAL	LDW280-52358	D1

ISSUED BY LIAISON J. PAULSEN SECTION VDI (EQUIP LINES) GROUP NO. 280 PL 5

01-

NAS 9-1100

GRUMMAN AIRCRAFT ENGINEERING CORP.
CODE IDENT NO. 26512
ENGINEERING ORDER

ENG 32.1 REV 3-65

DWG. NO.	LDW280-52358	EO NO.	D2
CONTROL INFO NO.	LM5-13726		

(ON-1 INSTL):

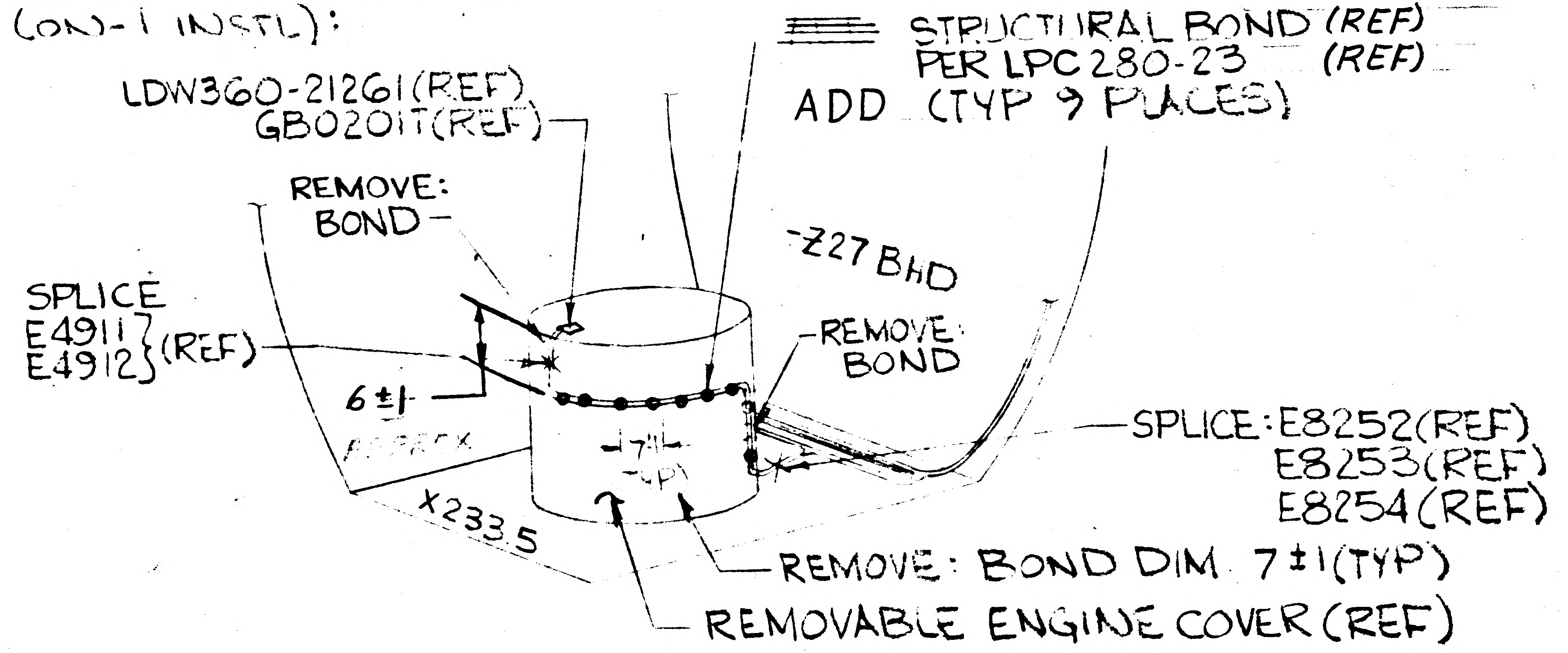

STRUCTURAL BOND (REF)
PER LPC 280-23 (REF)
ADD (TYP 9 PLACES)
LDW360-21261(REF)
GB02011T(REF)
REMOVE: BOND
SPLICE E4911 E4912 (REF)
6±1 APPROX
-Z27 BHD
REMOVE: BOND
SPLICE: E8252(REF) E8253(REF) E8254(REF)
7±1 (TYP)
X233.5
REMOVE: BOND DIM 7±1(TYP)
REMOVABLE ENGINE COVER (REF)

VIEW T-T
(AS SHOWN ON SH 5, ZONE 12B)

DETAIL SPEC REQ	☐	CL II ENGRG CHG	☑	CL I ENGRG CHG	☐	(5)

REASON FOR EO	DESCRIPTION OF EO	GAEC EO RELEASE
TO MAKE INSTL COMPATIBLE WITH LPC280-23.	(ON-1) REMOVED BONDING DIM [7±1(TYP] ADDED (TYP 9 PLACES) TO STRUCTURAL BOND.	® J/K

MODEL	PROCURING ACTIVITY NO.	GAEC UNIT NO	SUB CONTR UNIT NO.
LM		(LM-2, 32)	

DRAWING CHANGE REQD: REVISE DWG	RECORD EO	DISPOSITION OF PARTS: REWORK	SCRAP
✓		✓	

	VDI	SUPPORT	RELIAB. GROUP	GROUP LEADER	STRESS GROUP	LIAISON ENGRG	PROJ ENGRG	~~CONT~~
APPROVED BY	JJS			—	JJ	CH	JAP	[illegible]
DATE	12/1/67			—	12-7-67	12-7-67	12/1/67	12-7-67

PRIORITY	DRAWING TITLE	DRAWING N	EO NO.
C	LINES INSTL ELECTRONIC ASCENT STAGE-MIDSECT-INTERNAL	LDW280-52358	D2

ISSUED BY P.J. MARTELLO, ENOCK ROSADO x6454 SECTION VDI (EQUIP LINES) GROUP NO. 332 PL 5

01

NAS 9-1100

ENG 32.1 REV 3-65

GRUMMAN AIRCRAFT ENGINEERING CORP.
CODE IDENT NO. 26512
ENGINEERING ORDER

DWG. NO. LDW280-52358
EO NO. D3
CONTROL INFO NO. LDW280B1047

IN B/M ON -1 INSTL ADD LDW280-16083-1
(1 REQ'D.)

DETAIL SPEC REQ ☑ CL II ENGRG CHG ☐ CL I ENGRG CHG ☐

(5)

REASON FOR EO: DRAFTING ERROR
PART OMITTED FROM B/M (CDR LIST)

DESCRIPTION OF EO: IN B/M ON -1 INSTL ADDED LDW 280-16083-1 (1 REQ'D.)

GAEC EO RELEASE: JK 1/9/8

MODEL	EFFECTIVITY: PROCURING ACTIVITY NO.	GAEC UNIT NO.	SUB CONTR UNIT NO.
LM		NOT REQD	

DRAWING CHANGE REQD: REVISE DWG	RECORD EO	DISPOSITION OF PARTS: REWORK	SCRAP
✓		NOT	REQD

	VDI	SUPPORT	RELIAB. GROUP	GROUP LEADER	STRESS GROUP	LIAISON ENGRG	PROJ ENGRG	GOVT
APPROVED BY	JdS			JW	CW		Jap	Botti
DATE	1/3/68			1-3-67	1-4-68		1/3/68	1-9-68

PRIORITY: E
DRAWING TITLE: LINES INSTALLATION ELECTRICAL ASCENT STAGE-MID SECT. - INTERNAL
DRAWING NO. LDW280-52358
EO NO. D3

ISSUED BY H. MUTOLI SECTION EQUIPMENT LINES GROUP NO. 332 PL 25

01

NAS 9-1100

ENG 32.1 REV 3-65

GRUMMAN AIRCRAFT ENGINEERING CORP.
CODE IDENT NO. 26512
ENGINEERING ORDER

DWG NO. LDW280-52358 | EO NO. D4
CONTROL INFO NO. LDW280B1134

FOR -1 INSTL. IN B/M DELETE LDW280M16138-11

DETAIL SPEC REQ	✓	CL II ENGRG CHG	☐	CL I ENGRG CHG	☐

REASON FOR EO: DRAFTING ERROR PART NOT REMOVED (REF EO B-5) (CDR LIST)

DESCRIPTION OF EO: FOR -1 INSTL. IN B/M DELETED LDW280M16138-11

(5)
GAEC EO RELEASE: JK 1/13/8

MODEL	PROCURING ACTIVITY NO.	GAEC UNIT NO.	SUB CONTR UNIT NO.
LM		NOT REQD	

DRAWING CHANGE REQD		DISPOSITION OF PARTS		APPROVED BY								
		NOT	REQ'D.	DATE	1/8/68			1-8-68	1-9-68		1/8/68	1-13-68
REVISE DWG	RECORD EO	REWORK	SCRAP	~	VDI	SUPPORT	RELIAB. GROUP	GROUP LEADER	STRESS GROUP	LIAISON ENGRG	PROJ ENGRG	

PRIORITY: E
DRAWING TITLE: LINES INSTALLATION ELECTRONIC ASCENT STAGE-MID SECT-INTERNAL
DRAWING NO.: LDW280-52358
EO NO.: D4

ISSUED BY H. MUTOLI
SECTION EQUIPMENT LINES
GROUP NO. 332
PL 25

01 NAS 9-1100

ENG 32.1 REV 3-65

C

GRUMMAN AIRCRAFT ENGINEERING CORP.
CODE IDENT NO. 26512
ENGINEERING ORDER

DWG. NO. LDW280 52358
EO NO. D5
CONTROL INFO NO. LM 5-13781

ON-1
GA3661D (REF) WAS GA3661A (REF)
GA3662D (REF) WAS GA3662A (REF)
GA3663D (REF) WAS GA3663A (REF)

RELEASED BY LIAISON

DETAIL SPEC REQ ☐ CL II ENGRG CHG ☑ CL I ENGRG CHG ☐

(5)

REASON FOR EO: DWG CORRECTION CRAB (62)

DESCRIPTION OF EO: ON-1 GA3661D GA3662D, GA3663D WAS GA3661A GA3662A GA3663A

GAEC EO RELEASE: C

MODEL	PROCURING ACTIVITY NO.	GAEC UNIT NO.	SUB CONTR UNIT NO.
LM		LM2 (32)	

DRAWING CHANGE REQD: REVISE DWG ✓ RECORD EO
DISPOSITION OF PARTS: NONE (REWORK / SCRAP)

	VDI	SUPPORT	RELIAB. GROUP	GROUP LEADER	STRESS GROUP	LIAISON ENGRG	PROJ ENGRG
APPROVED BY					JFJ		
DATE					1-25-68	1-24-68	1/26/68

1/25/68

PRIORITY: C
DRAWING TITLE: LINES INSTL ELECTRONIC ASCENT STAGE TUNN
DRAWING NO.: LDW280-52358
EO NO.: D5

ISSUED BY ROSADO X 86454 SECTION EQUIP LINES GROUP NO. 332 PL 5

01

NAS 9-1100

ENG 32.1 REV 3-65

GRUMMAN AIRCRAFT ENGINEERING CORP.
CODE IDENT NO. 26512
ENGINEERING ORDER

DWG. NO. LDW280-52353 | EO NO. D6
CONTROL INFO NO. LM5-18022

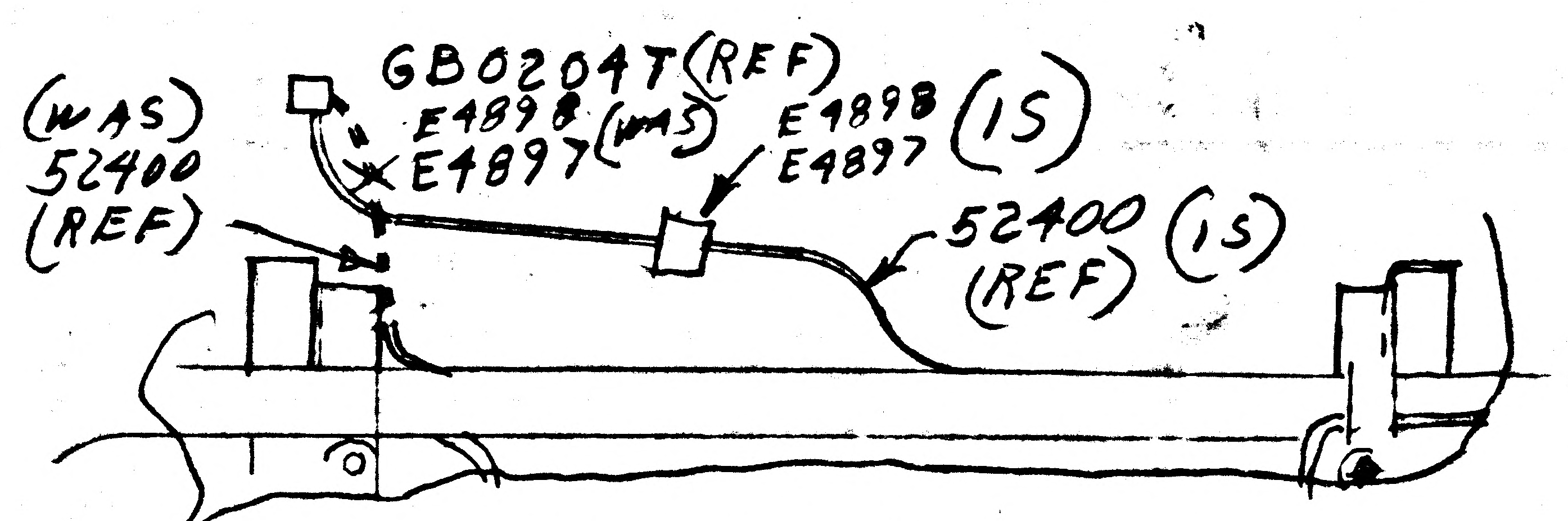

ZONE 10-D
SHEET 4

RELEASED BY LIAISON

DETAIL SPEC REQ	☐	CL II ENGRG CHG	✓	CL I ENGRG CHG	☐	(5)

REASON FOR EO: REVISE WIRE RUN TO AGREE WITH ACTUAL INSTALLATION. REVISION DUE TO CONFINED AREA & TO RETAIN PIGTAILS

DESCRIPTION OF EO: ON-1, LDW390-52400 PICTURE OF WIRE RUN & SPLICE LOCATION REVISED LOCALLY.

GAEC EO RELEASE: JK

MODEL	PROCURING ACTIVITY NO.	GAEC UNIT NO.	SUB CONTR UNIT NO.
LM		LM-2 (32)	

DRAWING CHANGE REQD: REVISE DWG	RECORD EO	DISPOSITION OF PARTS: REWORK	SCRAP
✓		✓	

	VDI	SUPPORT	RELIAB. GROUP	GROUP LEADER	STRESS GROUP	LIAISON ENGRG	PROJ ENGRG	GOVT
APPROVED BY	JHS			—	JFB	CL		
DATE	2/1/68				1-26-68	1-26-68	2/1/68	1/26/68

PRIORITY: C
DRAWING TITLE: LINES INSTALLATION - ELECT ASCENT STAGE MID SECT - INT.
DRAWING NO.: LDW280-52358
EO NO.: D6

ISSUED BY LIAISON J. PAULSEN X6755 SECTION VDI / EQUIP LINES GROUP NO. 280 PL 5

01 NAS 9-1100

RELEASED BY LIAISON

GRUMMAN AIRCRAFT ENGINEERING CORP.
CODE IDENT NO. 26512
ENGINEERING ORDER

DWG. NO. LDW280-52358
EO NO. D7
CONTROL INFO NO. LM5-13794

ON-1 REVISE CABLE ROUTING AS SHOWN:

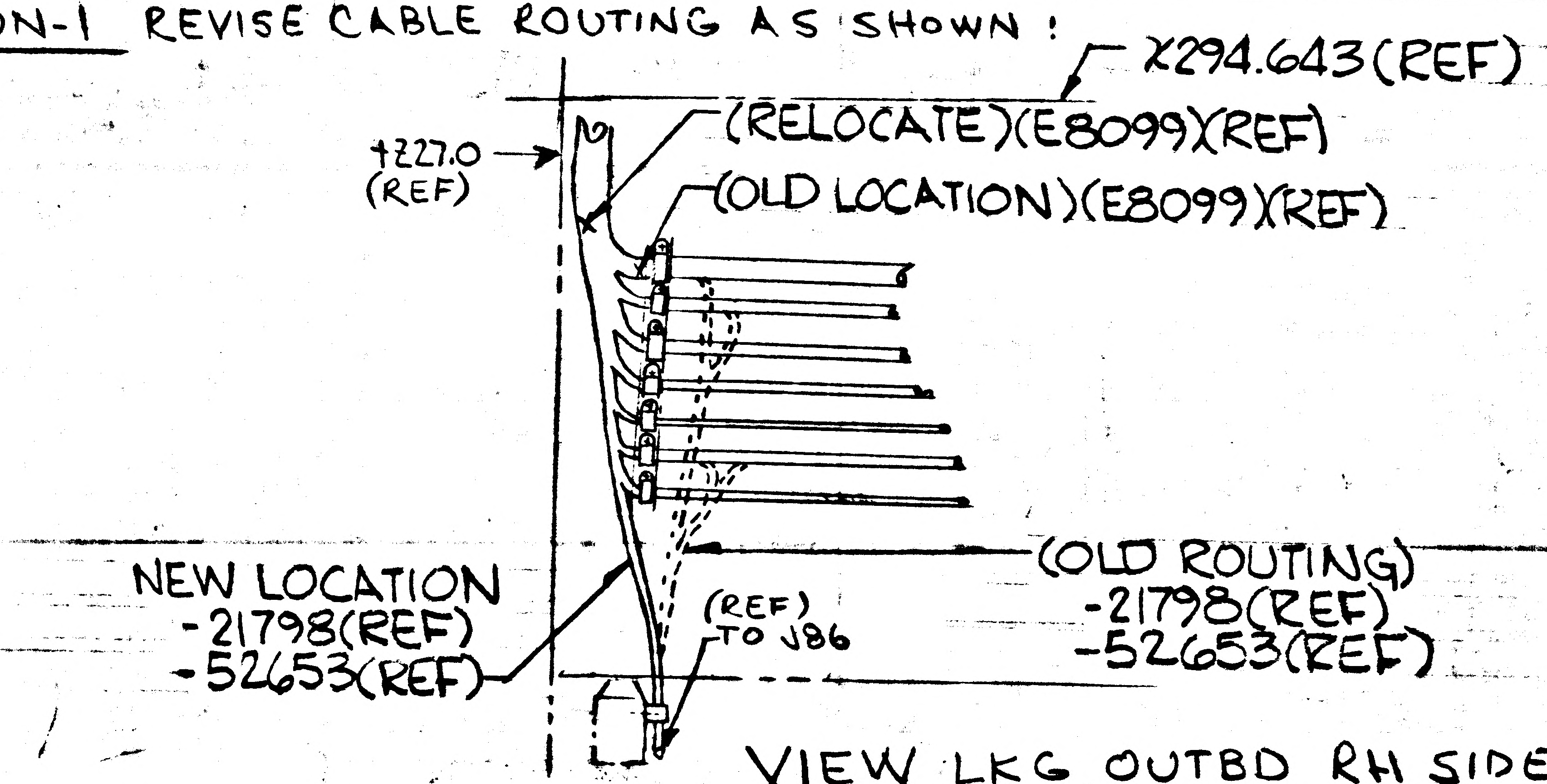
X294.643 (REF)
+Z27.0 (REF)
(RELOCATE)(E8099)(REF)
(OLD LOCATION)(E8099)(REF)
NEW LOCATION
-21798(REF)
-52653(REF)
(REF) TO J86
(OLD ROUTING)
-21798(REF)
-52653(REF)

VIEW LKG OUTBD RH SIDE
(SH 4 ZONE 11D)

DETAIL SPEC REQ ☐ CL II ENGRG CHG ☑ CL I ENGRG CHG ☐

REASON FOR EO: TO MAINTAIN COMPATIBILITY BETWEEN VEHICLE & DWG REF. QC CRAB # 64

DESCRIPTION OF EO: ON-1 REROUTED CABLE ASSYS -21798(REF) & -52653(REF). RELOCATED SPLICE E8099(REF)

GAEC EO RELEASE: J/C (5)

MODEL	PROCURING ACTIVITY NO.	GAEC UNIT NO.	SUB CONTR UNIT NO.
LM		LM2(32)	

DRAWING CHANGE REQD: REVISE DWG ✓ RECORD EO
DISPOSITION OF PARTS: REWORK ✓ SCRAP

	VD1	SUPPORT	RELIAB. GROUP	GROUP LEADER	STRESS GROUP	LIAISON ENGRG	PROJ ENGRG	GOVT
APPROVED BY				—				
DATE	2/1/68			—	1-29-68	1-29-68	2/1/68	1-29-68

PRIORITY: C
DRAWING TITLE: LINES INSTL ELECTRONIC ASCENT STAGE - MID SECT - INTERNAL
DRAWING NO.: LDW280-52358
EO NO.: D7

ISSUED BY J FARRELL X86454 SECTION VD I GROUP NO. 332 PL 25

01

NAS 9-110C

RELEASED BY LIAISON

ENG 32.1 REV

GRUMMAN AIRCRAFT ENGINEERING CORP.
CODE IDENT NO. 26512
ENGINEERING ORDER

DWG. NO.	LDW280-52358	EO NO.	D8
CONTROL INFO NO.	LM5-13795		

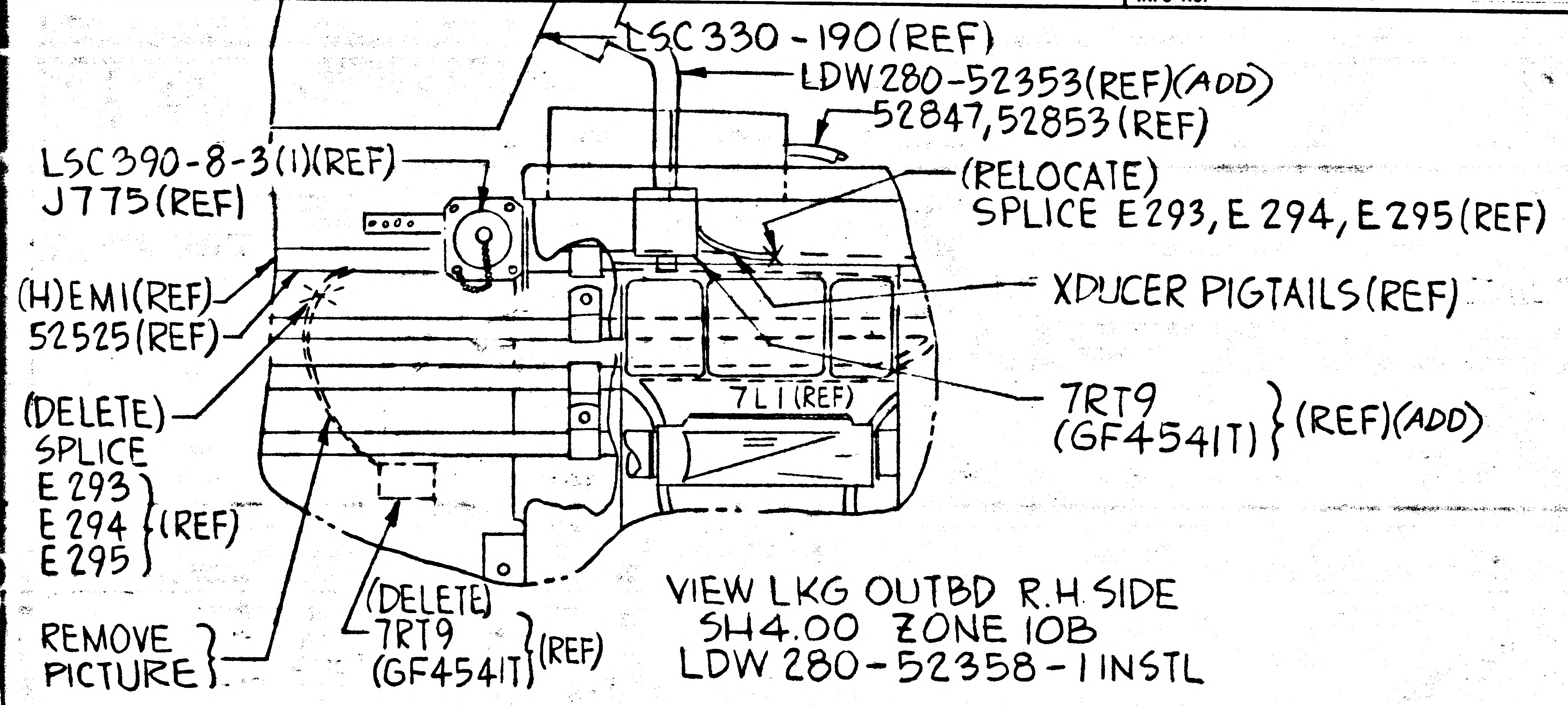
LSC 330-190 (REF)
LDW280-52353 (REF) (ADD)
52847, 52853 (REF)
LSC 390-8-3 (1) (REF)
J775 (REF)
(RELOCATE)
SPLICE E293, E294, E295 (REF)
XDUCER PIGTAILS (REF)
(H) EMI (REF)
52525 (REF)
7L1 (REF)
7RT9
(GF4541T) } (REF) (ADD)
(DELETE)
SPLICE
E293
E294 } (REF)
E295
REMOVE } PICTURE }
(DELETE)
7RT9
(GF4541T) } (REF)

VIEW LKG OUTBD R.H. SIDE
SH4.00 ZONE 10B
LDW 280-52358-1 INSTL

DETAIL SPEC REQ		CL II ENGRG CHG	✓	CL I ENGRG CHG	

REASON FOR EO: TO MAINTAIN COMPATIBILITY BETWEEN VEHICLE & DWG. (REF. Q.C. CRAB No. 52)

DESCRIPTION OF EO: ON-1, REVISED PICTURE
REROUTED XDUCER PIGTAILS & RELOCATED SPLICES
E293 (REF), E294 (REF) & E295 (REF.

GAEC EO RELEASE (E)

MODEL	EFFECTIVITY		
	PROCURING ACTIVITY NO.	GAEC UNIT NO.	SUB CONTR UNIT NO.
LM		LM 2 (32)	

DRAWING CHANGE REQD		DISPOSITION OF PARTS										
REVISE DWG	RECORD EO	REWORK	SCRAP	APPROVED BY								
✓		✓		DATE	2/1/68			—	1-29-68	1-29-68	2/1/68	1-29-68
					VDI	SUPPORT	RELIAB. GROUP	GROUP LEADER	STRESS GROUP	LIAISON ENGRG	PROJ ENGRG	GOVT

PRIORITY: C

DRAWING TITLE: LINES INSTL ELECTRONIC ASCENT STAGE-MID SECTION-CABIN

DRAWING NO.: LDW280-52358

EO NO.: D8

ISSUED BY HELLER/ROSADO (X1154) (1-26-68)

SECTION VDI (EQUIP LINES

GROUP NO. 332 PL 5

01

NAS 9-1100

GRUMMAN AIRCRAFT ENGINEERING CORP.
CODE IDENT NO. 26512
ENGINEERING ORDER

ENG 32.1 REV 3-66 B

DWG. NO. LDW 280-52358		EO NO.	D9
CONTROL INFO NO. LM5-13796			

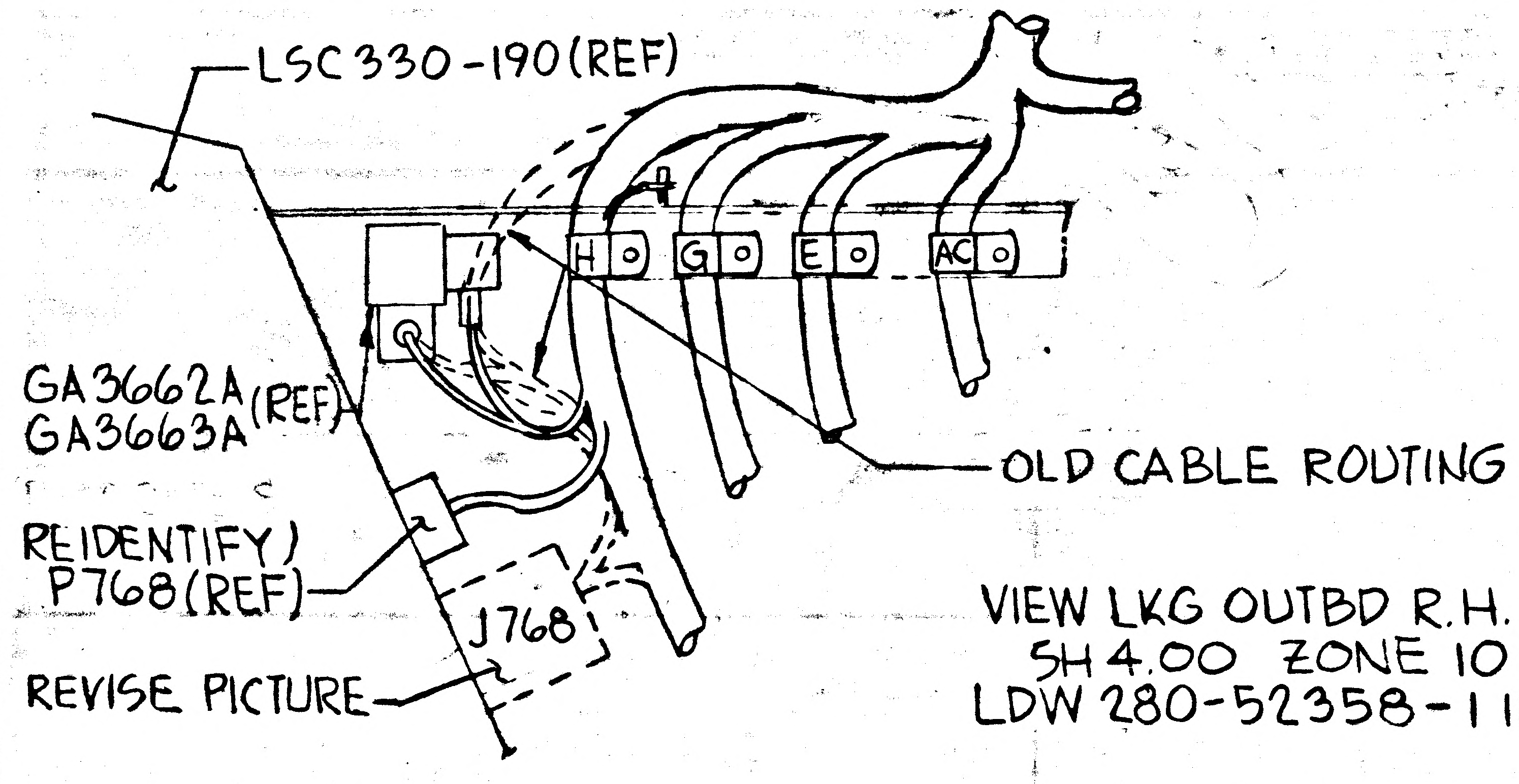

LSC330-190 (REF)
H
G
E
AC
GA36662A
GA36663A (REF)
OLD CABLE ROUTING
REIDENTIFY)
P768 (REF)
J768
REVISE PICTURE

VIEW LKG OUTBD R.H. SIDE
SH 4.00 ZONE 10 C
LDW 280-52358-1 INSTL

RELEASED BY LIAISON

DETAIL SPEC REQ		CL II ENGRG CHG	√	CL I ENGRG CHG	(5)

REASON FOR EO: TO MAINTAIN COMPATIBILITY BETWEEN VEHICLE & DWG. (REF. Q.C. CRAB Nos 57)

DESCRIPTION OF EO: ON -1 INSTL REVISED PICTURE. OF CABLE BREAK OUTS TO P768. P768(REF) WAS J768.

GAEC EO RELEASE: VC

MODEL	PROCURING ACTIVITY NO.	GAEC UNIT NO.	SUB CONTR UNIT NO.
LM		LM2(32)	

DRAWING CHANGE REQD: REVISE DWG	RECORD EO	DISPOSITION OF PARTS: REWORK	SCRAP
√		√	

	VDI	SUPPORT	RELIAB. GROUP	GROUP LEADER	STRESS GROUP	LIAISON ENGRG	PROJ ENGRG	~~GOVT~~
APPROVED BY	[illegible]			—	[illegible]	[illegible]	[illegible]	[illegible]
DATE	2/1/68				1-29-68	1-29-68	2/1/68	1-29-68

PRIORITY	DRAWING TITLE	DRAWING NO.	EO NO.
C	LINES INSTL ELECTRONIC ASCENT STAGE - MID SECT - CABIN	LDW 280-52358	D9

ISSUED BY HELLER/ROSADO (X1154) (1-26-68) SECTION VDI. GROUP NO. 332 PL 5

01 NAS 9-1100

ENG 32.1 REV. 3-66 ?ELEASED BY LIAISON

GRUMMAN AIRCRAFT ENGINEERING CORP.
CODE IDENT NO. 26512
ENGINEERING ORDER

DWG. NO. LDW280-52358 EO NO. D10
CONTROL INFO NO. LM5-13797

ON -1 INSTL SHEET 4 ZONE 10D
IN "VIEW LOOKING OUTB'D R.H. SIDE"

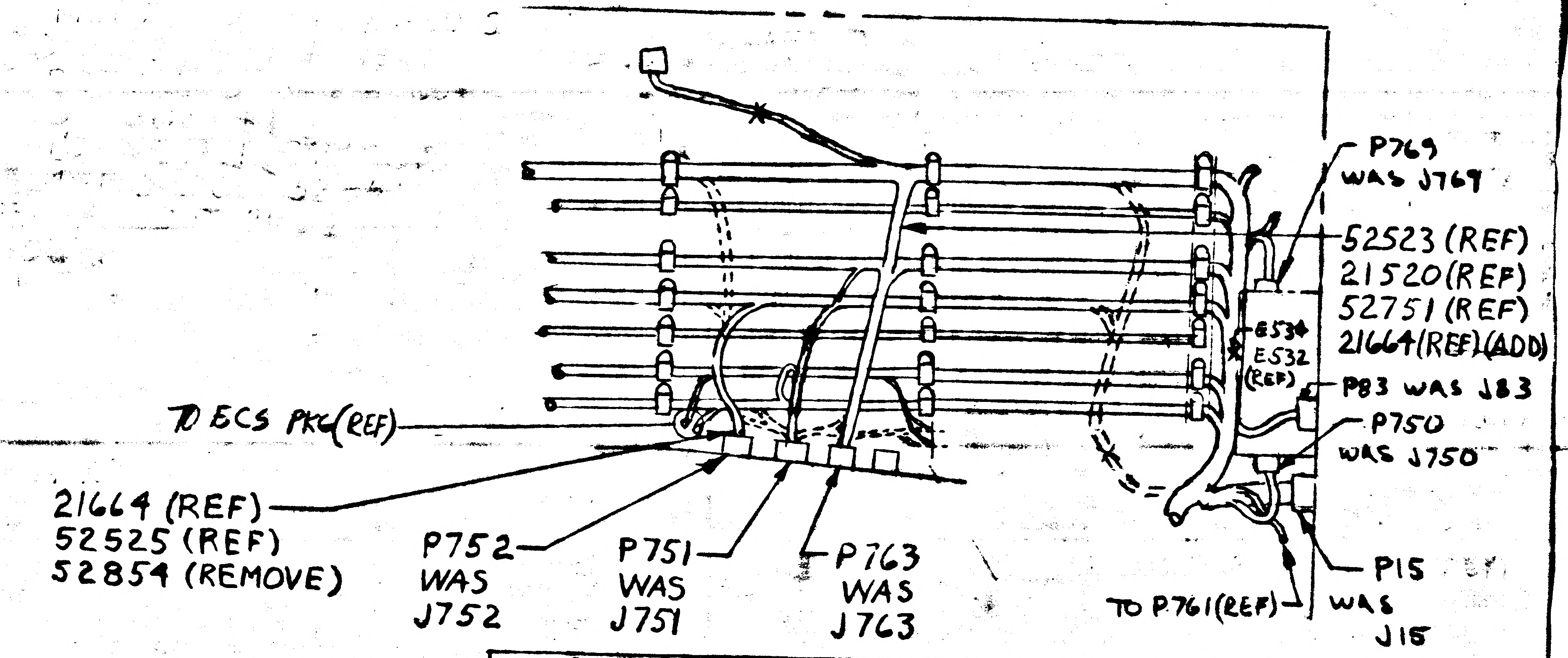
P769
WAS J769
52523 (REF)
21520 (REF)
52751 (REF)
21664 (REF) (ADD)
E534
E532
(REF)
P83 WAS J83
P750
WAS J750
TO ECS PKG (REF)
21664 (REF)
52525 (REF)
52854 (REMOVE)
P752
WAS
J752
P751
WAS
J751
P763
WAS
J763
P15
WAS
J15
TO P761 (REF)

DESC CONT P750 WAS J750, P15 WAS J15
P751 WAS J751, P763 WAS J763, P769 WAS J769, P83 WAS J83,

DETAIL SPEC REQ ☐ CL II ENGRG CHG ☑ CL I ENGRG CHG ☐

REASON FOR EO: TO MAINTAIN COMPATIBILITY BETWEEN VEHICLE & DWG (REF QC CRAB # 58, 60, & 65)

DESCRIPTION OF EO: ON-1 REVISED PICTURE OF BRAKEOUTS TO P750, P752, P751, P763, REMOVED REF CALLOUT 52854, ADDED REF CALLOUT 21664. P752 WAS J752,

GAEC EO RELEASE (5) VC

MODEL	PROCURING ACTIVITY NO.	GAEC UNIT NO.	SUB CONTR UNIT NO.
LM		LM-2 (32)	

DRAWING CHANGE REQD: REVISE DWG ✓ RECORD EO
DISPOSITION OF PARTS: REWORK ✓ SCRAP

APPROVED BY		SUPPORT	RELIAB. GROUP	GROUP LEADER	STRESS GROUP	LIAISON ENGRG	PROJ ENGRG
DATE	2/1/68			—	1-29-68	1-29-68	2/1/68
	VDI			—			1/29/68

PRIORITY C

DRAWING TITLE: LINES INSTL ELECTRONIC A/S MIDSECTION ~ INTERNAL

DRAWING NO. LDW280-52358 EO NO. D10

ISSUED BY FARRELL/RYAN X1392 1-26-68 SECTION VDI (EQUIP LINES) GROUP NO. 332 PL 25

01

NAS 9-1100

GRUMMAN AIRCRAFT ENGINEERING CORP.
CODE IDENT NO. 26512
ENGINEERING ORDER

ENG 32.2 REV 3-65

DWG. NO. LDW280-52358
EO NO. E1
CONTROL INFO NO. LM5-13798

ON-1 REVISE PICTURE OF CABLE ROUTING FOR J219(REF), J220(REF), J221(REF), & J222(REF) AS SHOWN:

NOTE: ⊑ ─ ─ ⊒ INDICATES OLD ROUTING; PICTURE SHOWS NEW ROUTING

RELEASED BY LIAISON

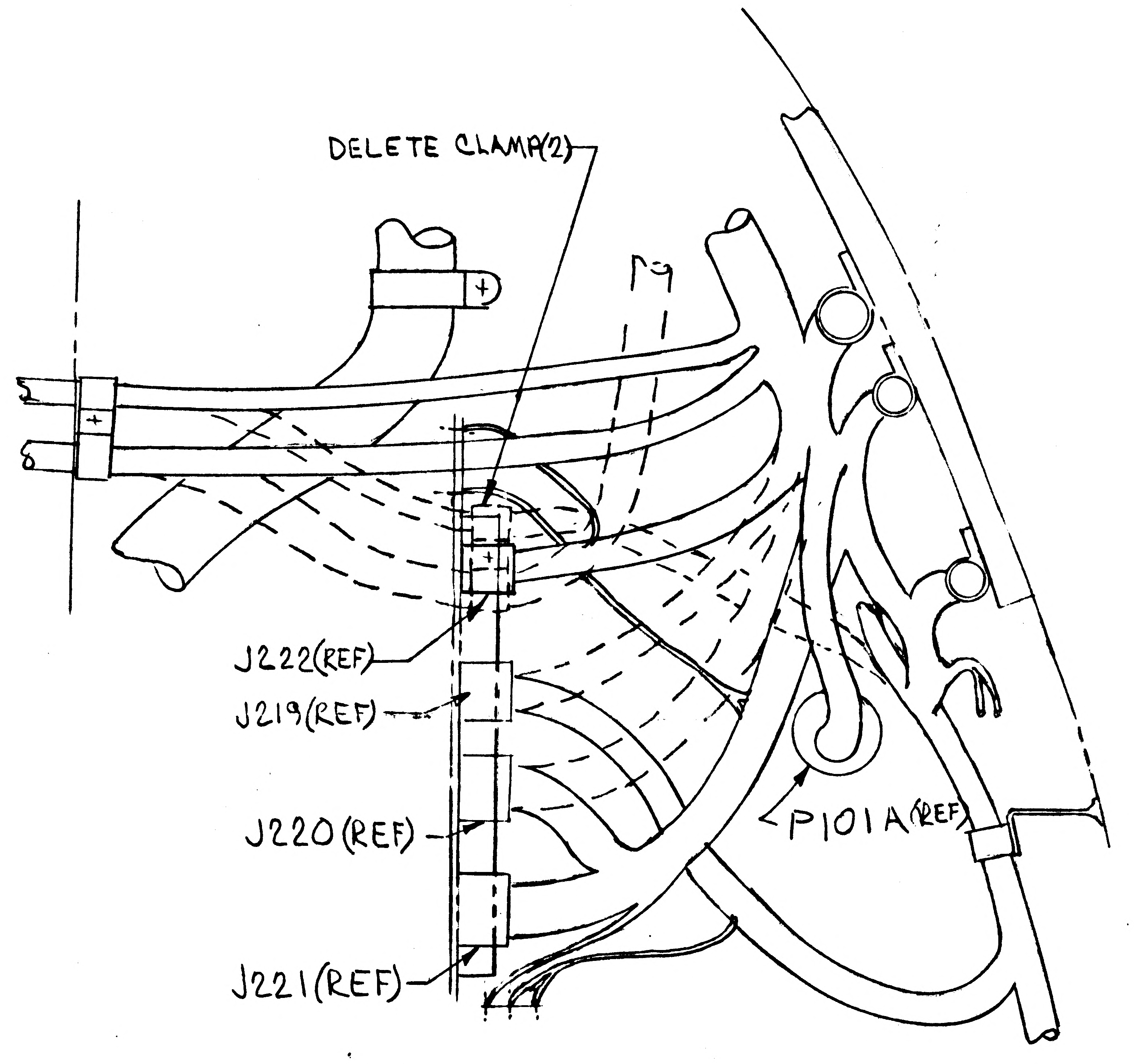

VIEW LKG AFT -Z27 BHD
(SH4 ZONE 6C)

UP
OUTBD

DETAIL SPEC REQ ☐ CL II ENGRG CHG ✓ CL I ENGRG CHG ☐

REASON FOR EO (REF QC CRAB #106) TO MAINTAIN COMPATIBITY BETWEEN VEHICLE & DWG.

DESCRIPTION OF EO ON-1 REVISED PICTURE OF CABLE ROUTING FOR J219(REF), J220(REF), J221(REF), & J222(REF). DELETED CLAMPS (2)

(5)

GAEC EO RELEASE JK

MODEL	PROCURING ACTIVITY NO.	GAEC UNIT NO.	SUB CONTR UNIT NO.
LM		LM 2(32)	

DRAWING CHANGE REQD: REVISE DWG ✓ RECORD EO
DISPOSITION OF PARTS: REWORK ✓ SCRAP

APPROVED BY								
DATE	2/1/68				1-29-68	1-29-68	2/1/68	1/29/68
	VD1	SUPPORT	RELIAB. GROUP	GROUP LEADER	STRESS GROUP	LIAISON ENGRG	PROJ ENGRG	~~GOVT~~ RED

PRIORITY C
DRAWING TITLE LINES INSTL ELECTRONIC A/S MID SECTION ~ INTERNAL
DRAWING NO. LDW280-52358
EO NO. E1

ISSUED BY R J FARRELL X 86454 SECTION VD I GROUP NO. 332 PL 5

01
NAS 9-1100

ENG 32.2 REV 3-65

GRUMMAN AIRCRAFT ENGINEERING CORP.
CODE IDENT NO. 26512
ENGINEERING ORDER

DWG. NO. LDW280-52358	EO NO. E2
CONTROL INFO NO. LM5-13799	

ON-1 ADD DETAIL TO SHOW OPTIONAL CABLE ROUTING FOR CABIN FANS.

- — ~~########~~ #/#/# INDICATES REROUTED CABLES.
- — ←----→ INDICATES HIDDEN CABLES & CLAMPS.
- — OPTIONAL ROUTING SHOWN

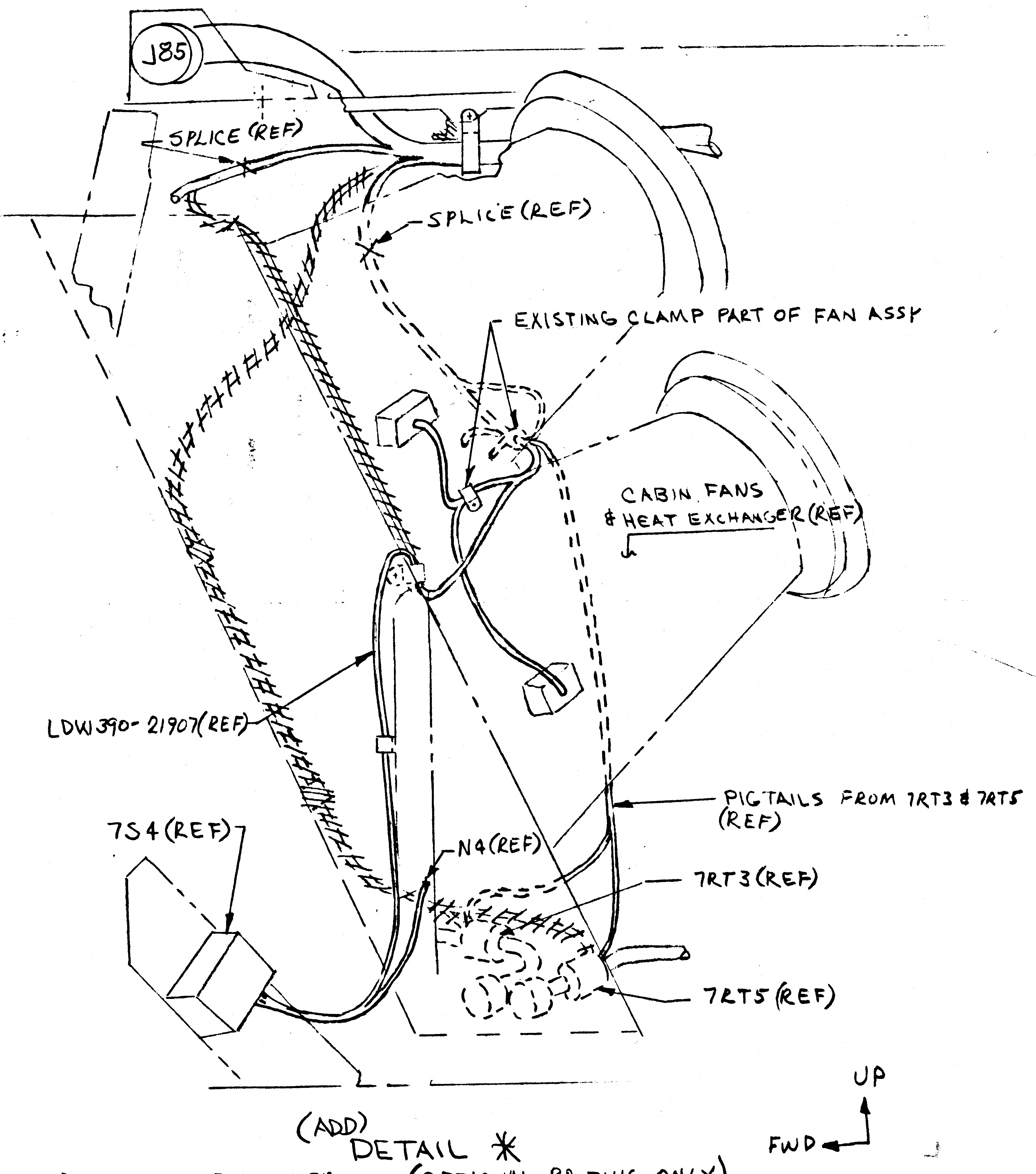

J85
SPLICE (REF)
SPLICE (REF)
EXISTING CLAMP PART OF FAN ASSY
CABIN FANS & HEAT EXCHANGER (REF)
LDW390-21907 (REF)
PIGTAILS FROM 7RT3 & 7RT5 (REF)
7S4 (REF)
N4 (REF)
7RT3 (REF)
7RT5 (REF)
UP
FWD

(ADD)
DETAIL *
(OPTIONAL ROUTING ONLY)

* USE NEXT AVAILABLE NUMBER

DETAIL SPEC REQ		CL II ENGRG CHG	✓	CL I ENGRG CHG		(5)

REASON FOR EO: TO MAINTAIN COMPATIBILITY OF VEHICLE & DWG (REF QC CRAB #54)

DESCRIPTION OF EO: ON-1 ADDED DETAIL * SHOWING OPTIONAL ROUTING FOR LDW390-21907 (REF) & PIGTAILS FROM 7RT3 & 7RT5 (REF)

GAEC EO RELEASE: C

MODEL	EFFECTIVITY		
	PROCURING ACTIVITY NO.	GAEC UNIT NO.	SUB CONTR UNIT NO.
LM		LM2 (32)	

DRAWING CHANGE REQD		DISPOSITION OF PARTS	
REVISE DWG	RECORD EO	REWORK	SCRAP
✓		✓	

APPROVED BY	VDI	SUPPORT	RELIAB. GROUP	GROUP LEADER	STRESS GROUP	LIAISON ENGRG	PROJ ENGRG	
				—		CL		AC
DATE	1/31/68				1-30-68	1-27-68	1/31/68	1-30-68

PRIORITY	DRAWING TITLE	DRAWING NO.	EO NO.
C	LINES INSTL ELECTRONIC A/S MID SECT INTERIOR	LDW280-52358	E2

ISSUED BY J FARRELL X86454 SECTION VDI GROUP NO. 332 PL 5

01

NAS 9-1100

E3

ENG 32.2 REV 3-65

GRUMMAN AIRCRAFT ENGINEERING CORP.
CODE IDENT NO. 26512
ENGINEERING ORDER

DWG. NO. LDW280-52358		EO NO. E3
CONTROL INFO NO. LM-5-18038		

ON-1
F/D
SH.4
ZONE A & B-11

01
NAS 9-1100

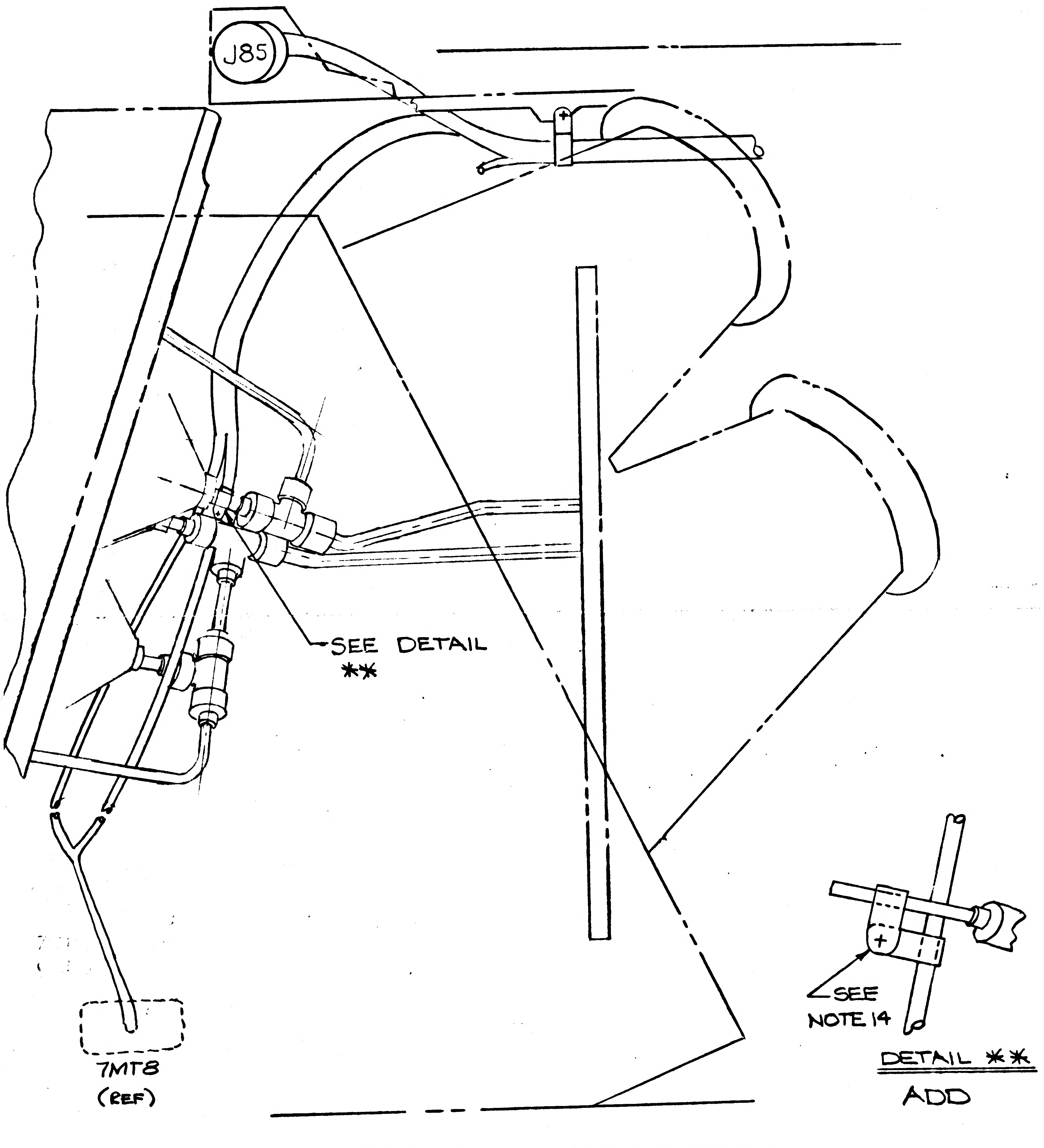

RELEASED BY LIAISON

DETAIL SPEC REQ		CL II ENGRG CHG	✓	CL I ENGRG CHG	

REASON FOR EO	DESCRIPTION OF EO	GAEC EO RELEASE
TO REVISE DWG TO CONFORM TO VEHICLE (CRAB #37)	ON-1 REVISED WIRE ROUTING TO 7MT8 ADDED DETAIL **	(5) JK

MODEL	PROCURING ACTIVITY NO.	GAEC UNIT NO.	SUB CONTR UNIT NO.
LM		LM-2 (32)	

DRAWING CHANGE REQD		DISPOSITION OF PARTS	
REVISE DWG	RECORD EO	REWORK	SCRAP
✓		-1	

APPROVED BY	JA			—	DV	CR	J.P.	Both
DATE	2/10/68				2/7/68	2-7-68	2/10/68	2-7-68
	VDI	SUPPORT	RELIAB. GROUP	GROUP LEADER	STRESS GROUP	LIAISON ENGRG	PROJ ENGRG	

PRIORITY	DRAWING TITLE	DRAWING NO.	EO NO.
C	LINES INSTALLATION ELECTRONIC ASCENT STAGE - MIDSECT - INTERNAL	LDW280-52358	E3

ISSUED BY LIAISON (H. BABCOCK) 9491 SECTION VDI GROUP NO. 280 PL 25

01
NAS 9-1100

ENG 32.2 REV 3-65

GRUMMAN AIRCRAFT ENGINEERING CORP.
CODE IDENT NO. 26512
ENGINEERING ORDER

DWG. NO. LDW280-52358 | EO NO. E4
CONTROL INFO NO. LDW280B2349

ON-1:

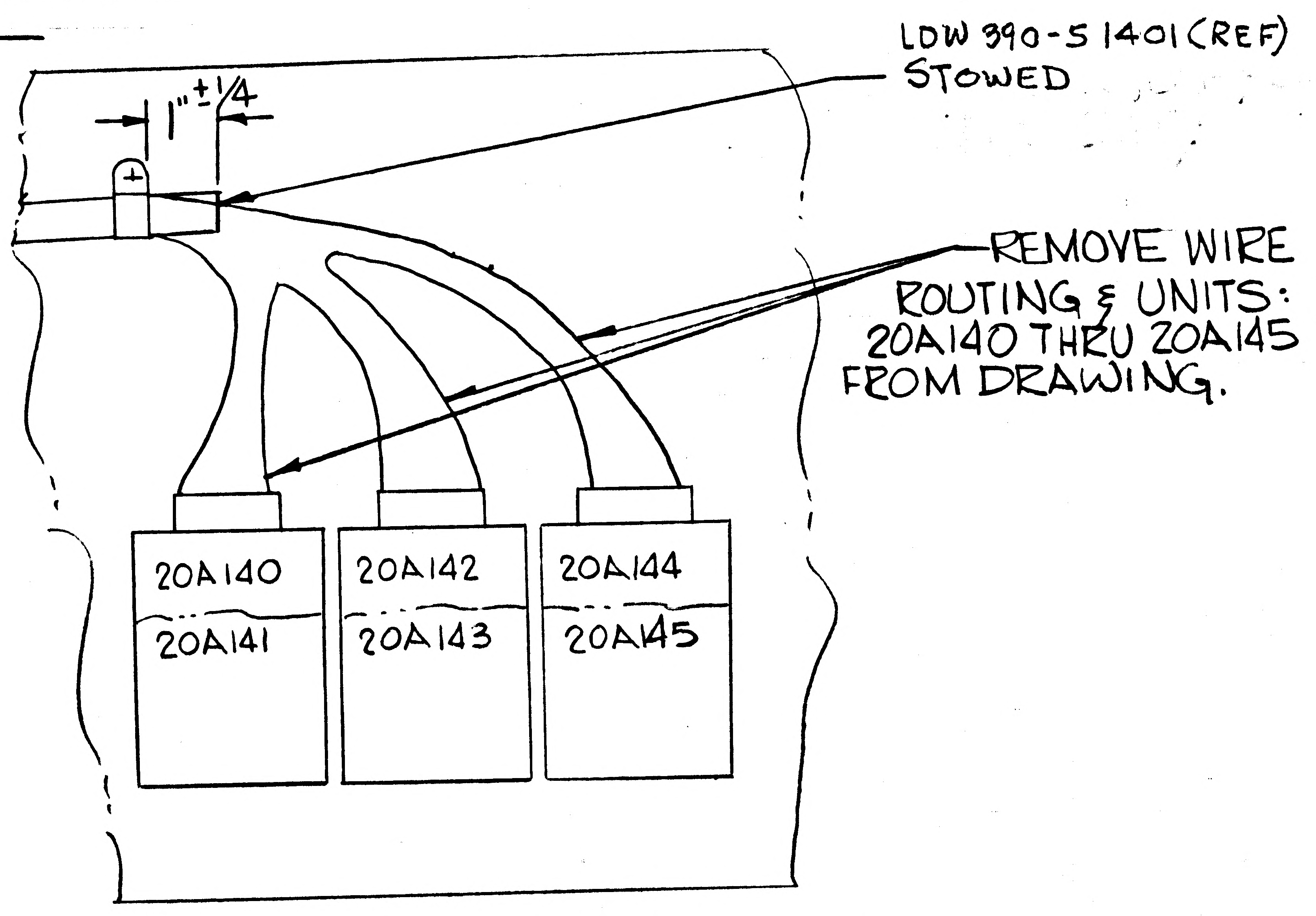

1" ± 1/4
LDW 390-5 1401 (REF)
STOWED
REMOVE WIRE ROUTING & UNITS: 20A140 THRU 20A145 FROM DRAWING.
20A140
20A141
20A142
20A143
20A144
20A145

PARTIAL VIEW OF VIEW D-D
(AS SHOWN ON SH.5, ZONE 19B)

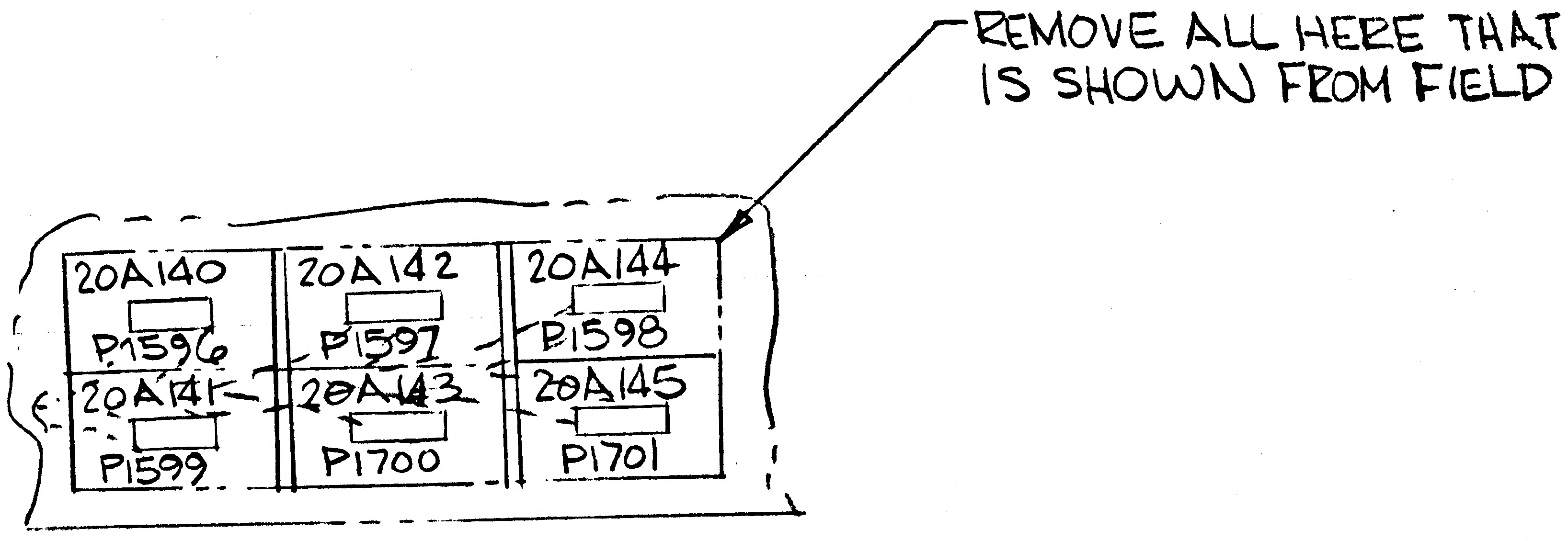

REMOVE ALL HERE THAT IS SHOWN FROM FIELD
20A140
P1596
20A141
P1599
20A142
P1597
20A143
P1700
20A144
P1598
20A145
P1701

PARTIAL VIEW OF — VIEW LOOKING OUTBD L.H. SIDE
(SH4, ZONE 3D) LDW280-52358-1 INSTL

DETAIL SPEC REQ		CL II ENGRG CHG		CL I ENGRG CHG	✓	LCD 2223 CCA 745	(5)

REASON FOR EO: AMPLIFIERS DELETED DUE TO LM-2 UNMANNED FLIGHT

DESCRIPTION OF EO: ON-1: IN FIELD REMOVED WIRE ROUTED TO 20A140 THRU 20A145 & PICTURE OF 20A140 THRU 20A145 ADDED 1" ± 1/4 DIM FOR CUT LENGTH.

GAEC C EO RELEASE: JK 2/24/68

MODEL	PROCURING ACTIVITY NO.	GAEC UNIT NO.	SUB CONTR UNIT NO.
LM		LM-2(32)	

DRAWING CHANGE REQD		DISPOSITION OF PARTS	
REVISE DWG	RECORD EO	REWORK	SCRAP
✓		✓	

APPROVED BY	JMS			jw	WS			Botts
DATE	2/19/68			2/20/68	2/20/68		2/20/68	2-21-68
R	VDI	SUPPORT	RELIAB. GROUP	GROUP LEADER	STRESS GROUP	LIAISON ENGRG	PROJ ENGRG	~~GOVT~~

PRIORITY: C
DRAWING TITLE: LINES INST ELECTRONIC ASCENT STAGE-MIDSECT-INTERNAL
DRAWING NO.: LDW280-52358
EO NO.: E4

2/23 ISSUED BY P.J. MARTELLO X1153 SECTION VDI (EQUIP LINES) GROUP NO. 332 PL 25

ENG 32.1 REV 3-65

GRUMMAN AIRCRAFT ENGINEERING CORP.
CODE IDENT NO. 26512
ENGINEERING ORDER

DWG. NO. LDW 280 52358
EO NO. E5
CONTROL INFO NO. LM5-13840

REF EO E4

REMOVE 1±1/4

END CAP & STOW LDW 390-51401 (REF)

RELEASED BY LIAISON

DETAIL SPEC REQ		CL II ENGRG CHG	,	CL I ENGRG CHG	√ LCD2223 CCA745

(5)

REASON FOR EO: UNITS NOT USED FOR UNMANNED

DESCRIPTION OF EO: ON-1 REMOVED 1±1/4

GAEC EO RELEASE: JK

MODEL	EFFECTIVITY: PROCURING ACTIVITY NO.	GAEC UNIT NO.	SUB CONTR UNIT NO.
LM		LM 2 (32)	

DRAWING CHANGE REQD: REVISE DWG	RECORD EO	DISPOSITION OF PARTS: REWORK	SCRAP
✓		NOT	REQD

APPROVED BY							
DATE	3/9				3-1-68	3/1/68	3/9
R	√DI	SUPPORT	RELIAB. GROUP	GROUP LEADER	STRESS GROUP	LIAISON ENGRG	PROJ ENGRG

PRIORITY: C
DRAWING TITLE: LINES INSTL ELECTRONIC ASCENT STAGE TUNNEL
DRAWING NO.: LDW 280-52358
EO NO.: E5

ISSUED BY Rosado x86454 SECTION EQUIP LINES GROUP NO. 332 PL 5

01

NAS 9-1100

GRUMMAN AIRCRAFT ENGINEERING CORP.
CODE IDENT NO. 26512
ENGINEERING ORDER

DWG. NO. LDW28052358 EO NO. E6
CONTROL INFO NO. LDW280B-2689

(ON-1 INSTL)

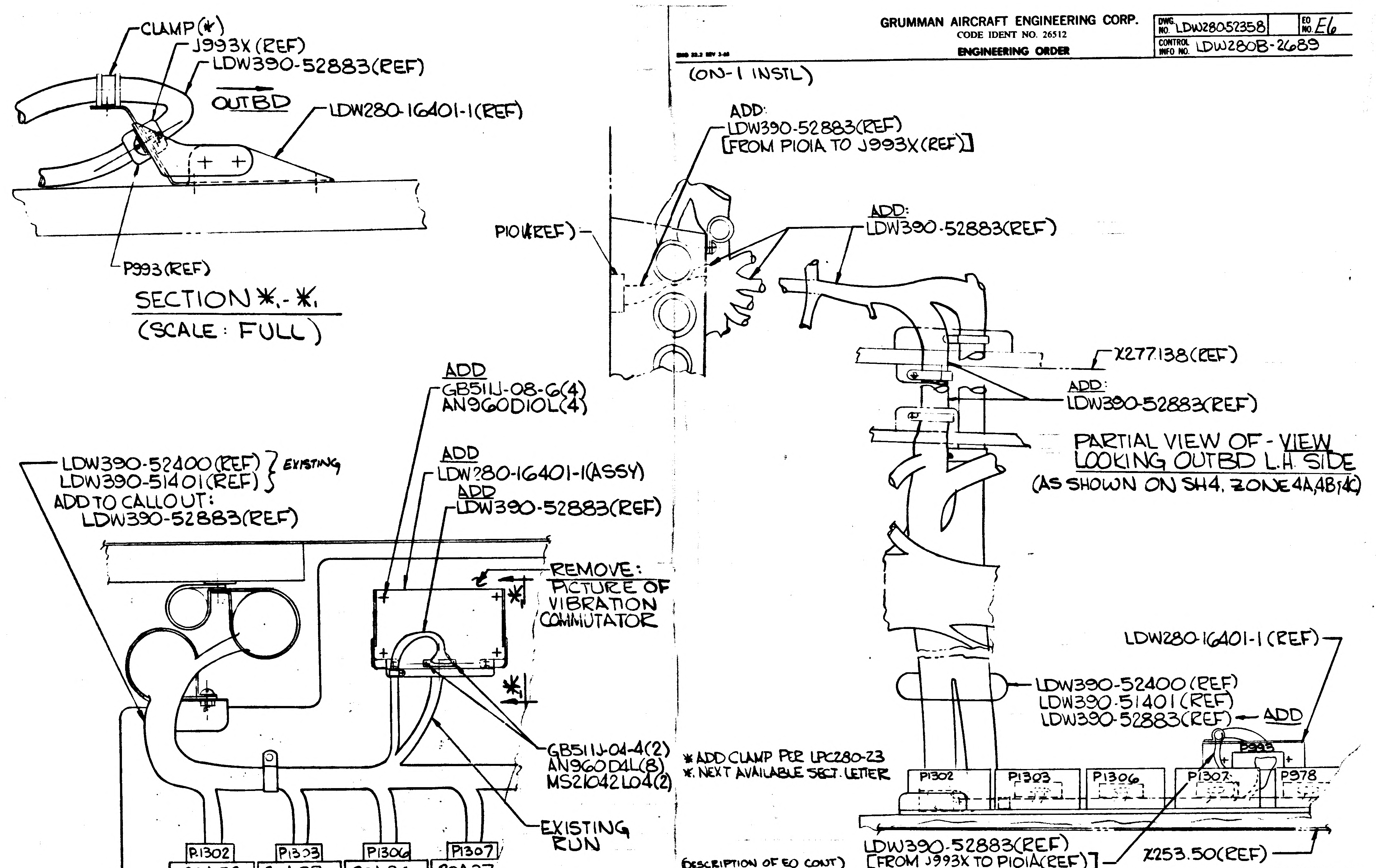
CLAMP(*)
J993X (REF)
LDW390-52883(REF)
OUTBD
LDW280-16401-1(REF)
P993(REF)
ADD
GB511J-08-6(4)
AN960D10L(4)
LDW390-52400(REF)
LDW390-51401(REF)
EXISTING
ADD TO CALLOUT:
LDW390-52883(REF)
ADD
LDW280-16401-1(ASSY)
ADD
LDW390-52883(REF)
REMOVE:
PICTURE OF
VIBRATION
COMMUTATOR
*1
GB511J-04-4(2)
AN960D4L(8)
MS21042L04(2)
EXISTING
RUN
P1302
20A32
AMP(6 TYP)
P1303
20A33
P1306
20A36
P1307
20A37
ADD:
LDW390-52883(REF)
[FROM P101A TO J993X(REF)]
P101(REF)
ADD:
LDW390-52883(REF)
X277.138(REF)
ADD:
LDW390-52883(REF)
LDW280-16401-1 (REF)
LDW390-52400 (REF)
LDW390-51401 (REF)
LDW390-52883(REF) ← ADD
P993
P1302
P1303
P1306
P1307
P978
LDW390-52883(REF)
[FROM J993X TO P101A(REF)]
X253.50(REF)

SECTION *1-*1
(SCALE: FULL)

PARTIAL VIEW OF VIEW F-F
(AS SHOWN ON SH 5, ZONE 15A)

PARTIAL VIEW OF - VIEW LOOKING OUTBD L.H. SIDE
(AS SHOWN ON SH4, ZONE 4A, 4B & 4C)

*ADD CLAMP PER LPC280-23
*1 NEXT AVAILABLE SECT. LETTER

(DESCRIPTION OF EO CONT) ROUTING OF CABLE ASSY LDW390-52883(REF) FROM J993X TO P101A & ADDED SECT *1-*1. REMOVED FROM VIEW F-F - PICTURE OF VIBRATION COMMUTATOR. & ADDED CLAMP GC500AC(1) (5)

DETAIL SPEC REQ		CL II ENGRG CHG		CL I ENGRG CHG	✓	LCD 2653	PKG. 2

REASON FOR EO	DESCRIPTION OF EO	GAEC EO RELEASE
ADDITION OF JUMPER HARNESS FOR ACOUSTICAL MEAS	(ON-1 INSTL) ADDED: LDW280-16401-1 ASSY, GB511J-04-4(2), AN960D4L (8), MS21042L04(2), GB511J-08-6(4), AN960D10L(4) & (CONTINUED ABOVE)	UC 3/20/68

MODEL	PROCURING ACTIVITY NO.	GAEC UNIT NO.	SUB CONTR UNIT NO.	DRAWING CHANGE REQD: REVISE DWG	RECORD EO	DISPOSITION OF PARTS: REWORK	SCRAP
LM		LM-2 (32		✓		✓	

APPROVED BY / DATE: 3/19/68 / 3/19/68 / 3/19/68
T — VD1 — CHECK — RELIAB. GROUP — GROUP LEADER — STRESS GROUP — LIAISON ENGRG — PROJ ENGRG

PRIORITY	DRAWING TITLE	DRAWING NO.	EO NO.
C	LINES INSTALLATION ELECTRONIC A/S MID SECTION	LDW280-52358	E6

3/27 ISSUED BY P.J MARTELLO X 1153 SECTION VD1 (EQUIP LINES) GROUP NO. 332 PL 25

01 NAS 9-1100

ENG 32.1 REV 3-65

GRUMMAN AIRCRAFT ENGINEERING CORP.
CODE IDENT NO. 26512
ENGINEERING ORDER

DWG. NO. LDW280-52358
EO NO. E7
CONTROL INFO NO. LM 5-13897

REF EO E6

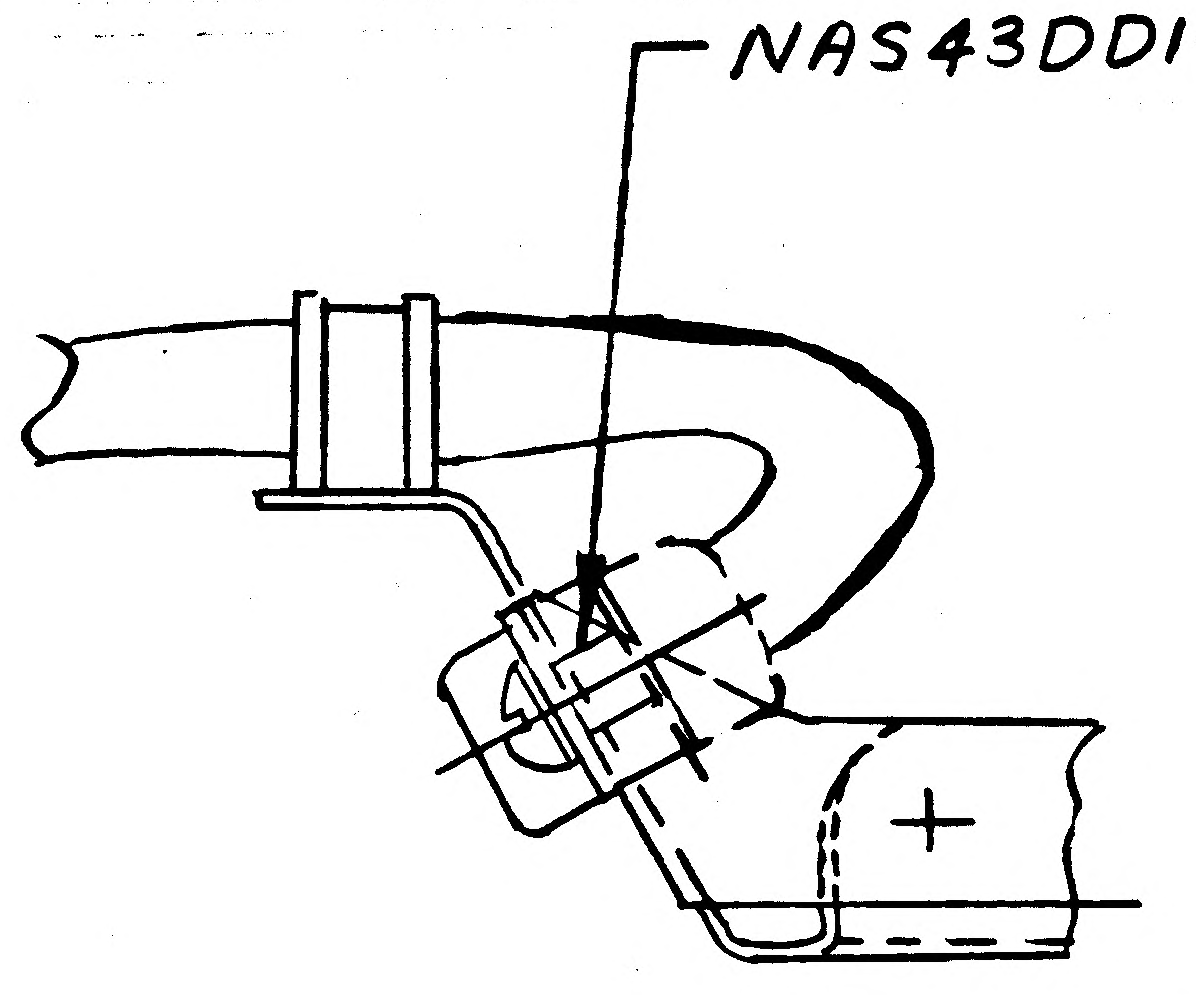

VIEW F-F
GB511J-04(2)
AN960D4L(4)
MS21042L04(2)
NAS43DD1-12(2)
WAS
GB511J-04(2)
AN960D4L(8)
MS21042L04(2)

PARTIAL VIEW OF VIEW F-F
SHOWN ON SH 5 ZONE 15A

RELEASED BY LIAISON

DETAIL SPEC REQ		CL II ENGRG CHG	✓	CL I ENGRG CHG		LCD 2653 (5)

REASON FOR EO: TO PROVIDE SPACER FOR CONNECTOR

DESCRIPTION OF EO: ON-1 REF EO E6 REVISED PICTURE SECT *,-*, TO INCLUDE NAS43DD1-12 & VIEW F-F AN960D4L(4) WAS(8) ADDED NAS43DD1-12 TO EXIST CALLOUT

GAEC EO RELEASE: ✓

MODEL	EFFECTIVITY: PROCURING ACTIVITY NO.	GAEC UNIT NO.	SUB CONTR UNIT NO.
LM		LM 2(32)	

DRAWING CHANGE REQD: REVISE DWG ✓ | RECORD EO
DISPOSITION OF PARTS: REWORK ✓ | SCRAP

APPROVED BY	JRS			Z				
DATE	4/20/68				3-29-68	3-29-68	4/20	4/20/68
	VD1	SUPPORT	RELIAB. GROUP	GROUP LEADER	STRESS GROUP	LIAISON ENGRG	PROJ ENGRG	GOVT

PRIORITY: C
DRAWING TITLE: LINES INSTL ELECTRONIC ASCENT STAGE TUNNEL
DRAWING NO.: LDW280-52358
EO NO.: E7

ISSUED BY CH ROSADO 86454 SECTION EQUIP LINES GROUP NO. 332 PL 5

01

NAS 9-1100

REVISIONS

CHANGE LTR	ITEM NO.	SHEET NO.	ZONE	GRUMMAN INFO ONLY	DET SPEC	CLASS I	CLASS II	ENGRG ORDER	DESCRIPTION	EFFECTIVITY	DISPOSITION OF EXISTING PARTS		CHANGED BY AND DATE	ENGRG APPD	GOVT APPD
											REWORK	SCRAP			
A	1	5.00	20A					EO A1	DELETED EMI "D" & REMOVED CLAMP FROM VIEW AA-AA.	LM-2(32)	NOT	REQD	T. BIANCHI 5/26/67		
	2	5.00	29B 28A 29B 28C 28B					EO A2	SEPARATED E2A & E2B CABLE ASSY. ADDED VIEW AN-AN. ADDED VIEW AP-AP.						
	3	3.00						EO A3 LEO 280-314	ADDED NOTE 10.						
	4	3.00						EO A4 LEO 280-377	ADDED NOTE 11.						
B	1	3.00 5.00	 23B 23C					EO B1	ADDED NOTE 8. ADDED VENDOR WIRE ROUTING.						
	2	1.00						EO B2	ADDED SH 7.00.						
	3.	4.00	2A 3A				✓		ADDED CABLES -51704,-52858,-52936.						
	4	4.00	2C 5B						ADDED VIEW BR-BR.						
	5	4.00	4C 5C						ADDED GT11J-BR08-12(6).						
	6	4.00 5.00	5C 6C 17B 24B						ADDED GT11J-BR08-10(4).						
	7	4.00	4C						ADDED VENDOR WIRE ROUTING.						
	8	4.00	5C 7C						ADDED -21938 EMI "D".						

FOR CONTINUATION OF REVISIONS SEE SHEET 2

GRUMMAN AIRCRAFT ENGRG CORP, BETHPAGE, L. I., NEW YORK

SIZE	CODE IDENT NO.		
B	26512	LDW280-52359	B (B)
SCALE	NONE		SHEET 1.10

ENG 77.3 5-65

01

NAS 9-1100

REVISIONS

CHANGE LTR	ITEM NO.	SHEET NO.	ZONE	GRUMMAN INFO ONLY	DET SPEC	CLASS I	CLASS II	ENGRG ORDER	DESCRIPTION	EFFECTIVITY	DISPOSITION OF EXISTING PARTS		CHANGED BY AND DATE	ENGRG APPD	GOVT APPD
											REWORK	SCRAP			
B	9	4.00 5.00	7						IN ZONES 7C,9A,11C,16C,22A REROUTED CABLE 52675 "H".	LM-2(32)	NOT	REQD	T. BIANCHI 5/26/67		
	10	4.00							IN ZONES 4C,7C,8B,11A ADDED NAS43DD3-32(4).						
	11	4.00	7C 11B						ADDED VIEW CB-CB.						
	12	4.00	7A 8B 5A						REROUTED 52858,"H" 21906"H", 52649"C", 21916"E" ADDED VIEWS BV-BV & CC-CC ADDED SPLICES E916-E918, E927-E936, E2581-E2583.						
	13	4.00 5.00	9A 21A						REMOVED QUANTITY SENSORS AND ASSOCIATED CALLOUTS.						
	14	4.00 5.00	8B 26B 27B 23A				✓		RELOCATED GP302Y-Y, GP2801X-X, GP2803Z-Z FROM ZONE 26&27B. TO ZONE 8B REROUTED 52517"H", 28945"H" 52858"C", GC875BA-1, GC875BA-2, GC875BA-3.						
	15	4.00	9B 27C						ADDED 10MT60, 10MT61, 10MT62, 10MT63, 10MT64, ADDED VENDOR WIRE. ADDED CABLES 52858"C", 52649"C", 52834"H", 51934"H".						
	16	4.00	11C 11B 11A						ADDED NAS43DD3-40(10).						
	17	4.00	10B						DELETED VIEW G-G.						
	18	4.00	9A						ADDED SPLICE CALLOUT E452, E453, E456, E457.						
	19	5.00	14A 15A 16A						ADDED VIEW LKG DWN SHIELDING FRAME FUEL TANK L/H.						
	20	5.00	15C						REROUTED -52674"H", 21874"H", 52951"H", 21904"D".						
	21	5.00	16C						REROUTED -21914"D", 21876"D".						

FOR CONTINUATION OF REVISIONS SEE SHEET 2

GRUMMAN AIRCRAFT ENGRG CORP, BETHPAGE, L. I., NEW YORK

SIZE	CODE IDENT NO.		
B	26512	LDW280-52359	B
SCALE NONE			SHEET 1.11

(B)

ENG 77.3 5-65

01

NAS 9-1100

REVISIONS

CHANGE LTR	ITEM NO.	SHEET NO.	ZONE	GRUMMAN INFO ONLY	DET SPEC	CLASS I	CLASS II	ENGRG ORDER	DESCRIPTION	EFFECTIVITY	DISPOSITION OF EXISTING PARTS REWORK	DISPOSITION OF EXISTING PARTS SCRAP	CHANGED BY AND DATE	ENGRG APPD	GOVT APPD
B	22	5.00	16C 16B						ADDED VIEW BU-BU.	LM2-(32)	NOT	REQD	T. BIANCHI 5/26/67	JS	
	23	5.00	16C						ADDED NAS43DD3-32(1).						
	24	5.00	17C 18C						ADDED VENDOR WIRE ROUTING.						
	25	5.00	18C 25B						REROUTED 52797 & 52858.						
	26	5.00	18C 20B						ADDED VIEW BT-BT.						
	27	5.00	18B 24C						REVISED CLAMP CONFIGURATION ADDED NAS43DD3-32(1)						
	28	5.00	17A 18A 21C 29B				✓		ADDED VENDOR WIRE. ADDED CABLES 52858"H", 21906"H", 52649"C", 21916"E" ADDED GC500S-20W(3), GB511J-08-4(3) AN960D8L(6) MS21042L08(3).						
	29	5.00	19B 18B						VIEW BS-BS WAS X-X.						
	30	5.00	21B 22B						ADDED VIEW LKG INBD R/H SHIELDING FRAME.						
	31	5.00	21A						ADDED SPLICE CALLOUT E3604, E3605, E3608, E3609 & SPLICE CALLOUT E220-E223.						
	32	5.00	24A 24B						VIEW AL-AL WAS XX-XX.						
	33	5.00	24B						REF EO B1 CONTINUED WIRE ROUTING OUT TO GUILLOTINE SUPPLIED BY NORTH AMERICAN.						

FOR CONTINUATION OF REVISIONS SEE SHEET 3

GRUMMAN AIRCRAFT ENGRG CORP, BETHPAGE, L. I., NEW YORK

SIZE	CODE IDENT NO.		
B	26512	LDW280-52359	B (B)
SCALE NONE			SHEET 1.12

ENG 77.3 5-65

01

NAS 9-1100

REVISIONS

CHANGE LTR	ITEM NO.	SHEET NO.	ZONE	GRUMMAN INFO ONLY	DET SPEC	CLASS I	CLASS II	ENGRG ORDER	DESCRIPTION	EFFECTIVITY	DISPOSITION OF EXISTING PARTS		CHANGED BY AND DATE	ENGRG APPD	APPD
											REWORK	SCRAP			
B	34	5.00	26A 26B						RELOCATED GA1501D FROM ZONE 26A TO ZONE 26B. ADDED CABLE 510911-201, REROUTED 52517"H" & 52905"C".	LM-2(32)	NOT	REQD	T. BIANCHI 5/26/67		
	35	5.00 4.00	26C 5A						RELOCATED GA1503D FROM ZONE 5A to ZONE 26C. ADDED CABLE 510911-201, REROUTED 52517"H" & 52905"C".						
	36	5.00	25A						VIEW AM-AM WAS *-*.						
	37	5.00	26C 27C						ADDED SECT BL-BL.						
	38	5.00	16C						ADDED NAS43DD3-48(1).						
	39	4.00	7B						ADDED GB511J-04-2(4), AN960D4L(8), MS21042L04(4).						
	40	4.00	13A						ADDED MS21043-4 SEE NOTE (7).						
	41	5.00	16B						ADDED GB511J-04-2(4), AN960D4L(8), MS21042L04(4) (TYPE 2 PLACES).						
	42	5.00	16A						ADDED MS21043-4(5), (SEE NOTE 7)						
	43	5.00	24B						ADDED DKG LIGHT SWITCH "ON" (16DS12) ADDED CABLE 28607"A" & SPLICE E4212, E4213.						
	44	5.00	28A 28C				✓		REF EO A2 ADDED NAS43DD3-40, NAS43DD3-48.						
	45	5.00	30A 29B						ADDED NAS43DD3-64(4) & NAS43DD3-32(1)						
	46	2.00 2.01							COMPLETELY REVISED BM.						
	47	3.00							ADDED NOTE 12.						
	48	1.00						A+B	ADDED SH 1.10, 1.11, 1.12, 1.13, 6.00. REVISED SH 1 OF 12 WAS SH 1 OF 6. REVISED LAST DASH NO. USED -3 WAS -1. REVISED LAST SECT LTR USED CC-CC WAS BR-BR.						

FOR CONTINUATION OF REVISIONS SEE SHEET 4

ENG 77.3 5-65

GRUMMAN AIRCRAFT ENGRG CORP, BETHPAGE, L. I., NEW YORK			
SIZE B	CODE IDENT NO. 26512	LDW280-52359	B
SCALE NONE		SHEET 1.13	

(B)

01 NAS 9-1100

REVISIONS

CHANGE LTR	ITEM NO.	SHEET NO.	ZONE	GRUMMAN INFO ONLY	DET SPEC	CLASS I	CLASS II	ENGRG ORDER	DESCRIPTION	EFFECTIVITY	DISPOSITION OF EXISTING PARTS		CHANGED BY AND DATE	ENGRG APPD	GOVT APPD
											REWORK	SCRAP			
C	1	3.00		I			✓	EO C1	ADDED NOTE NO. 13	LM-2	NOT	REQ'D	A A ARTEN 11-17-67		
	2	5.00	21A	I				EO C2	ON -1 INSTL; ADDED: ADDITIONAL ROUTING FOR -21809		✓				
	3	5.00 2.00	21A	I				EO C3	ON -1 INSTL; ADDED -1 CALLOUT & MSZ1919WDG7(7)(REF EOC2)						
	4	7.00	38A 40B/C	I				EO C4	ON -3 INSTL; ADDED: NEW LINE ROUTING & RELOCATED 20MT134 (ITEM 14) GB0623 & P1520.						
	5	7.00	42B	I				EO C5	ON -3 INSTL; DELETED: PREVIOUS LINE RUN, & RELOCATED 20MT35, ITEM 18, GB0801 & P1389 (REF.)						
	6	7.00 2.00	40B 40C 41B 42C	I				EO C6	ON -3 INSTL; RELOCATED: 20MT37, ITEM 18, GB0803, P1391 DELETED: BONDING CALLOUT & (2) LINE RUNS ADDED: MSZ1919WH-2 (4) GB511J-08-2 (4) AN960D8L (8), MS21042L08(4), GT11JBR-08-12(2) & (3) ADDITIONAL LINE RUNS.						
	7	7.00	42B	I				EO C7	ON -3 INSTL; ADDED: NEW CLAMPS (PER LPC-280-23B)						
	8	7.00	41B 44A 45A	I				EO C8	ON -3 INSTL; ADDED: N4 DESIGNATION 3 PLACES E1000, E1001, E1002, 20TC119A, 20TC109A, 20TC117A, & WIRING, SPLICES.						
	9	7.00	40C	I				EO C9	ON -3 INSTL; ROTATED MSZ1919WH2 & REROUTED LDW390-28402 LINE RUN						
	10	7.00	42C	I			✓	EO C10	ON -3 INSTL; ADDED BONDING NOTE TO F/D. DELETED CLAMP PICTURE & RERT'D LDW390-28402						
D	1	7.00	40C	I				EO D1	ON -3 INSTL; ADDED SERVICE LOOP TO LDW390-28402						
	2	7.00	44C	I				EO D2	ON -3 INSTL; ADDED SECT. CD-CD VIEW, WIRING TO P1505, P1506, P1514, LDW390-28402 & SELECTION & INSTL. OF CLAMPING TO BE IN ACCORDANCE WITH LPC 280-23. DELETED WIRING TO P1505, P1506, P1514 IN SECTIONS BE-BE & AZ-AZ.						
	3			I				EO D3 LCD-1078	SEE E.O. D4		NOT	REQ'D			

LTR	GROUP LDR	VDI			STRUCTURES	STRUCTURES			PROJECT	RELEASE

FOR CONTINUATION OF REVISIONS SEE SHEET 6

GRUMMAN AIRCRAFT ENGRG CORP, BETHPAGE, L. I., NEW YORK

SIZE	CODE IDENT NO.		
B	26512	LDW280-52359	F Ⓕ
SCALE NONE		SHEET 1.14	

ENG 77.3 5-65

01

NAS 9-1100

REVISIONS

CHANGE LTR	ITEM NO.	SHEET NO.	ZONE	GRUMMAN INFO ONLY	DET SPEC	CLASS I	CLASS II	ENGRG ORDER	DESCRIPTION	EFFECTIVITY	DISPOSITION OF EXISTING PARTS REWORK	DISPOSITION OF EXISTING PARTS SCRAP	CHANGED BY AND DATE	ENGRG APPD	GOVT APPD
L	4	4.00 5.00	10C 28B	I			✓	EO D4 LCD 1078	CANCELLED BY EO E10	LM-2	✓		A. A. ARTEN 11-17-67		
	5	5.00	28B 29B					EO D5 LCD 1626	ON -1 INSTL; INTERCHANGED P1116 & P1123 CONNECTORS REMOVED 21560D (TO P1018), LSC380-0062-14 (REF.) REVISING VIEW T-T.						
	6	2.00 4.00 5.00	 9A 21A			✓		EO D6 LCD 1694	ON -1 INSTL; ADDED: GT11J-BR-08-12(2) IN F/D & B/M, E4669, E7903 & E7904 IN F/D.						
	7	4.00 5.00	5B 12C 16B 20C 25C					EO D7 LCD 1306	ON -1 INSTL; REVISED FOLLOWING: IN VIEW LKG INBD L/H, SIDE, R/H SIDE, VIEW B-B, K-K, R-R, T-T, U-U, AB-AB, AD-AD, SECT. BS-BS, VIEW LKG INBD RCS MOD R/H SIDE REVISED WIRE ROUTING, ADDED CODINGS ON CABLE ASSYS (EX. A-CR3A) & ADDED VIEWS CE-CE.						
	8	4.00 5.00 6.00	5A 7A, B 8A, B 9B 27B 17, 18 21A 21C 23A 23B 24B 27C 28B 36A				✓	EO D8 LCD 1594	ON -1 INSTL; IN VIEW LKG UP FUEL & OXY. TANK REMOVED H-52858 & TEMPT. EXDUCER 10MT 33834; -52858, E2581 & E2583 FROM VIEW BV-BV & CC-CC; REMOVED H-52858 (FROM P909B, E2581, E2582 & E2583; IN VIEW LKG. INBD L/H & R/H, ADDED -52858 (FROM P909B TO 10MT 79, 80C 52882) (J95 TO P101B) IN VIEW W-W, SECT. BN-BN, ADDED C 52882 (FROM P101B TO J95); IN VIEW B-B, ADDED "SEE VIEW LKG UP ENG COMPT CLAMP" PER LPC 280-23 (6) 52858 (FROM P909B TO 10MT 79, 80 THRU E2581, E2582, E2586, E2587), IN VIEW LKG INBD RCS MOD RH, ADDED -52945H (FROM J172 TO P909B), CLAMPS PER LPC280-23 (2) FOR CONTINUATION, SEE VIEW T-T SECT. CG-CG NAS43DD3-32; IN VIEW LKG. UP ENG. COMPT. ADDED SECT. CH-CH, 52858 "SEE VIEW B-B ZONE 9B SH. 4 "CLAMP PER LPC280-23 (4) E2581, E2582, E2586 & E2587, NAS43DD3-32; IN VIEW AE-AE, ADDED 5285811, FROM P909B TO 10MT79.						

LTR	GROUP LDR	VDI			STRUCTURES	STRUCTURES			PROJECT	RELEASE

FOR CONTINUATION OF REVISIONS SEE SHEET 7

GRUMMAN AIRCRAFT ENGRG CORP, BETHPAGE, L. I., NEW YORK

SIZE	CODE IDENT NO.		
B	26512	LDW280-52359	F
SCALE NONE		SHEET 1.15	

ENG 77.3 5-66

01

NAS 9-1100

REVISIONS

CHANGE LTR	ITEM NO.	SHEET NO.	ZONE	GRUMMAN INFO ONLY	DET SPEC	CLASS I	CLASS II	ENGRG ORDER	DESCRIPTION	EFFECTIVITY	DISPOSITION OF EXISTING PARTS		CHANGED BY AND DATE	ENGRG APPD	GOVT APPD
											REWORK	SCRAP			
D	9	5.00	17C 19B 21A 29A				✓	EO D9 LCD 1306	ON -1 INSTL; ROUTED REDUNDANT WIRES IN VIEW LKG INBD R/H SIDE, SECT. BS-BS VIEW LKG INBD RCS MOD R/H SIDE, VIEW T-T, VIEW AD-AD. VIEW CF-CF (REVISES EO D7.)	LM-2	✓		A A ARTEN 11-17-67		
	10	4.00 5.00	3A,B 5ABC 6C 7C 9A 11BC 12B 18A 21A 24B					EO D10 LCD 1299	ON -1 INSTL; ADDED TO EXISTING ROUTING: 52635 (8MT46) 8MT46 (REF.) E7989, E7990, E7991 (REF.); IN VIEW LKG INBD RCS MOD. L/H SIDE; 52635 (8MT46) IN VIEW S-S SH. 4 Z3B; 52635 (8MT46) IN VIEW LKG INBD L/H. SIDE; 52635 (8MT47) IN VIEW LKG INBD R/H. SIDE; 8MT47 (REF.) E7992, E7993, E7994 (REF.) IN VIEW LKG INBD RCS MOD R/H SIDE SH 5 Z21A; 56235 (8MT47) & VIEW W-W FOR EO REF; 21608 'F' IN VIEW A-A SH. 4 Z21C, VIEW F-F SH. 4 Z11C, VIEW CB-CB SH. 4 Z11B; DELETED: 21608 FROM EMI 'F' CALLOUT IN VIEW L-L SH. 5 Z12B & VIEW LKG INBD SH 4 Z5B						
E	1	4.00 5.00	12B 19B			✓		EO E1 LCD-1752	ON -1 INSTL; ADDED TO VIEW K-K: LDW390-28607 (P180 TO P898) REVISED: LDW390-21650 (P180 TO J104) WAS (J701 TO J704) & SECT. BS-BS; REVISED: LDW390-52951 (P1410B TO J1404, E1452, E1453B) WAS LDW390-52951 FROM J701 TO P1410B.						
	2	3.00					✓	L EO280-676 LCD 1863	ADDED NOTE NO. 14						
	3	2.00 5.00 6.00	15C,16B 17C 24,25A 31A					EO E3 LCD 1860	ON -1 INSTL; ADDED: GC500AA-40 (4), GC500AC-6 (4) GB511J-08-3 (4) AN960D8L (8) & MS21042L08 (4) REROUTED CABLES 'D' 21552, H-52858, H-52797, C-52797, B-52797 IN VIEW LKG INBD R/H SIDE, VIEW Y-Y, Z-Z, VIEW AJ-AJ, AM-AM, & ADDED VIEW CS CS.						
	4	2.00 5.00	24B					EO E4	ON -1 INSTL; ADDED NAS43DD3-24 (1) & RELOCATED CLAMP						
	5	2.00 4.00 5.00	4A 9B 24B					EO E5	ADDED: NAS43DD3-24 (2), NAS43DD3-77 (1) AND VIEWS CJ-CJ, CK-CK & CL-CL						

CHG APPROVED

LTR	GROUP LDR	VDI			STRUCTURES	STRUCTURES			PROJECT	RELEASE

FOR CONTINUATION OF REVISIONS SEE SHEET 8

GRUMMAN AIRCRAFT ENGRG CORP, BETHPAGE, L. I., NEW YORK

SIZE B	CODE IDENT NO. 26512	LDW280-52359	F
SCALE NONE			SHEET 1.16

Ⓕ

ENG 77.3 5-66

01 NAS 9-1100

REVISIONS

CHANGE LTR	ITEM NO.	SHEET NO.	ZONE	SH CHG LTR	GRUMMAN INFO ONLY	DET SPEC	CLASS I	CLASS II	ENGRG ORDER	DESCRIPTION	EFFECTIVITY	DISPOSITION OF EXISTING PARTS REWORK	DISPOSITION OF EXISTING PARTS SCRAP	CHANGED BY AND DATE	ENGRG APPD	GOVT APPD
E	6	3.00 5.00	24B						EO E6 LCD 1078	ADDED NOTE NO. 15 ON -1 INSTL; ADDED: F/D NOTE FOR CABLE SLACK & MOLDED ENVELOPE WITH LOCATING DIMS.	LM-2	✓		A A ARTEN 11-17-67		
	7	2.00 4.00 5.00	8A 21A						EO E7	ON -1 INSTL; ADDED: GT11J-BR08-12 (2) E4253, E4254, E4256 & E3459.						
	8	5.00	24B						EO E8	ON -1 INSTL; REVISED VIEW CJ-CJ TO CLARIFY PICTURE & LOCATION OF NAS43DD3-24 (REF. EO E5)						
	9	2.00 3.00 4.00/5.00						✓	EO E9	ON -1 INSTL; DELETED: MS21043-4 (8) DELETED: NOTES 7 & 8. REMOVED: VIEW P-P, VIEW V-V.		NOT	REQ'D			
	10	4.00 5.00	10C 28B						EO E10 LCD 1819	CANCELLED; EO D4		✓				
F	1	2.00 4.00	5B						EO F1	ON -1 INSTL; ADDED: GT11J-BR08-10, NAS48DD-24 (2) & NAS43DD3-32 (2). VIEWS CM-CM, CN-CN & CP-CP. ON -1 INSTL, ROUTED: CABLES -52688AC$2B, -52687AC$2A, -52687'F', -52688'F', LSC270-00723, -21828'E', IN VIEW B-B, R-R, T-T, VIEW LKG INBD L/H & R/H SIDE IN VIEW LKG UP ENG. COMPT. & IN VIEW LKG INBD RCS MOD R/H SIDE						
	2	2.00 4.00 5.00	5B 9B 26B 27B		E		✓		EO F2 LCD-1978	ON -1 INSTL; ADDED: NAS43DD3-32 (3) ADDED: VIEW CR-CR; DELETED: VIEW CP-CP ON - 1 INSTL; ROUTED -52688AC$2B IN VIEW B-B VIEW LKG INBD L/H.S. & VIEW LKG UP ENG COMPT (REF EO F1)						
	3	6.00	31A					✓	EO F3	ON -1 INSTL; ADDED GS830 SLEEVE & DESCRIPTIVE NOTE						
	4	5.00	24B						EO F4	ON -1 INSTL; ADDED GC500 CLAMP & LDW280-11202 & REF DESIGNATIONS						

CHG APPROVED

LTR	GROUP LDR	VDI			STRUCTURES	STRUCTURES			PROJECT	RELEASE

FOR CONTINUATION OF REVISIONS SEE SHEET 8

77.3 5-64

GRUMMAN AIRCRAFT ENGRG CORP, BETHPAGE, L. I., NEW YORK

SIZE	CODE IDENT NO.		
B	26512	LDW280-52359	F

Ⓕ

SCALE NONE

SHEET 1, 17

01

NAS 9-1100

CL					-3	-1	CODE IDENT	PART NO.	I&T	NOMENCLATURE OR DESCRIPTION	MATERIAL	GOVT SPEC	COML SPEC	STOCK SIZE	PROCESS SYM	FINISH NO.	ZONE
QTY PER ASSEMBLY																	
						4		MS21919WH-2	E	NUT	STD PART						
A						7		MS21919WDG-7		NUT							
						4		MS21919WDH46		NUT							
						8		MS21042L04		NUT							
						24		MS21042L08		NUT	STD PART						
						16		AN960D4L		WASHER	STD PART						
						48		AN960D8L		WASHER	STD PART						
						1		NAS43DD3-77		SPACER TUBE	STD PART						
						4		NAS43DD3-64									
						2		NAS43DD3-48									
						11		NAS43DD3-40									
						17		NAS43DD3-32									
						5		NAS43DD3-24									
						A/R		GT535U-8		TAPE	GRUMMAN STD						
						13		GT11J-BR08-12		TERMINAL INSTL	GRUMMAN STD						
						6		GT11J-BR08-10		TERMINAL INSTL	GRUMMAN STD.						
						4		GC500AA-40		CLAMP	GRUMMAN STD						
						8		GC500S-20W									
						6		GC500S-19W									
						2		GC500S-16W									
						10		GC500J-D6T		CLAMP	GRUMMAN STD						
						10		GB511J-08-4		BOLT	GRUMMAN STD						
						10		GB511J-08-3		BOLT	GRUMMAN STD						
						4		GB511J-08-2		BOLT	GRUMMAN STD						
						8		GB511J-04-2		BOLT	GRUMMAN STD						
					1	1		LDW390-52014		AREA INSTL	SEE DWG						5A
					1			LDW280-52359-3		LINES INSTL ELEC	SEE DWG						41A
A						1		LDW280-52359-1	E	LINES INSTL ELEC	SEE DWG						6A

CL= CLEANLINESS LEVEL PER LSP14-0011

SYM OR NO.	PROCESS OR FINISH	GRUMMAN SPEC OR MILITARY SPEC	SYM OR NO.	PROCESS OR FINISH	GRUMMAN SPEC OR MILITARY SPEC	SYM OR NO.	PROCESS OR FINISH	GRUMMAN SPEC OR MILITARY SPEC

I & T: IDENTIFICATION AND TRACEABILITY IN ACCORDANCE WITH : NONE

GRUMMAN AIRCRAFT ENGRG CORP, BETHPAGE, L. I., NEW YORK

SIZE	CODE IDENT NO.		
B	26512	LDW280-52359	F

SCALE NONE

SHEET 2.00

(F)

ENG 77.2 7-65

01

NAS 9-1100

A					SEE	NOTE 5		MS20995NC32		WIRE, LOCK	STD PART						
								MS21266		GROMMET							
								AN960D		WASHER							
								MS21042L		NUT	STD PART						
								GT835K		TAPE, LACING	GRUMMAN STD						
								GT835C		TAPE, INSUL							
								GS830		SLEEVE							
								GC500S		CLAMP							
					SEE	NOTE 5		GB511J		BOLT	GRUMMAN STD						
						6		LSC380-00602-14		PLUG ADAPTOR	SEE DWG						28B
A						2		LSC380-00602-13		PLUG ADAPTOR	SEE DWG						28B
					-3	-1	CODE IDENT	PART NO.	I&T	NOMENCLATURE OR DESCRIPTION	MATERIAL	GOVT SPEC	COML SPEC	STOCK SIZE	PROCESS SYM	FINISH NO.	ZONE
QTY PER ASSEMBLY																	

SYM OR NO.	PROCESS OR FINISH	GRUMMAN SPEC OR MILITARY SPEC	SYM OR NO.	PROCESS OR FINISH	GRUMMAN SPEC OR MILITARY SPEC	SYM OR NO.	PROCESS OR FINISH	GRUMMAN SPEC OR MILITARY SPEC

I & T: IDENTIFICATION AND TRACEABILITY IN ACCORDANCE WITH : NONE

GRUMMAN AIRCRAFT ENGRG CORP, BETHPAGE, L. I., NEW YORK

SIZE	CODE IDENT NO.		
B	26512	LDW280-52359	F

SCALE NONE

SHEET 2 OF 1

ENG 77.2 7-65

01

NAS 9-1100

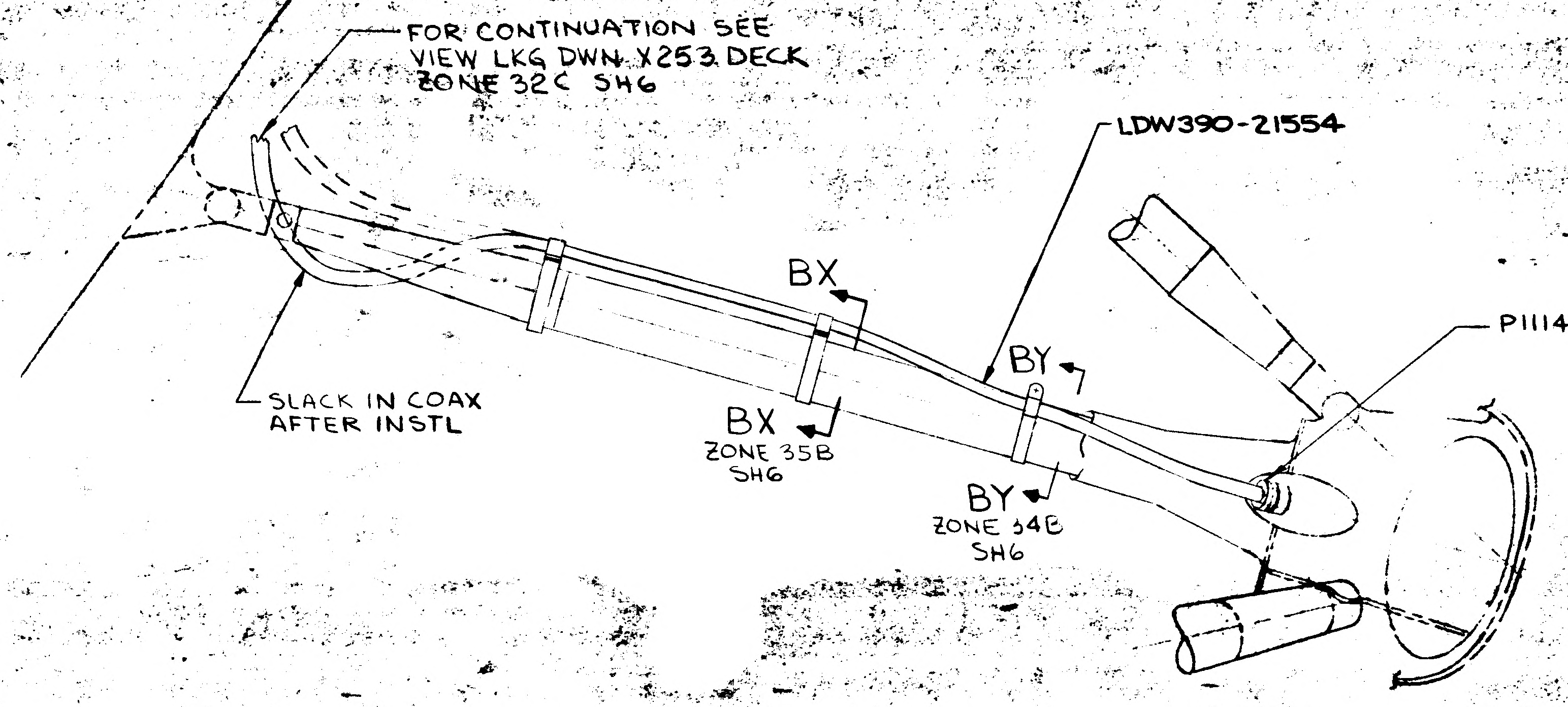
FOR CONTINUATION SEE VIEW LKG DWN X253 DECK ZONE 32C SH6
LDW390-21554
BX
BY
P1114A(REF)
SLACK IN COAX AFTER INSTL
BX ZONE 35B SH6
BY ZONE 34B SH6

DETAIL BH
ZONE 32C SH5

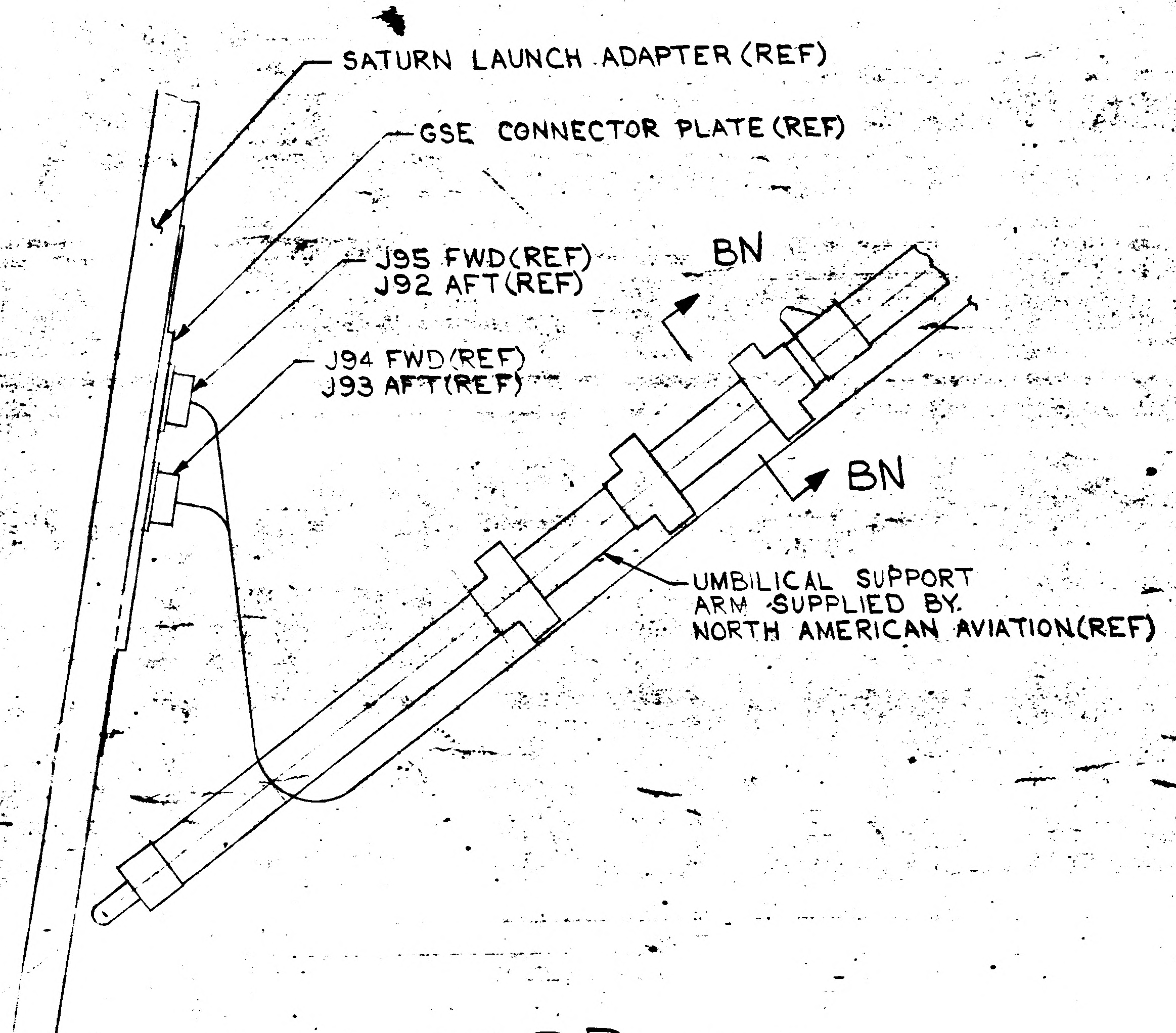
SATURN LAUNCH ADAPTER (REF)
GSE CONNECTOR PLATE (REF)
J95 FWD(REF)
J92 AFT(REF)
J94 FWD(REF)
J93 AFT(REF)
BN
BN
UMBILICAL SUPPORT ARM SUPPLIED BY NORTH AMERICAN AVIATION(REF)

VIEW BP-BP
ZONE 24B SH5

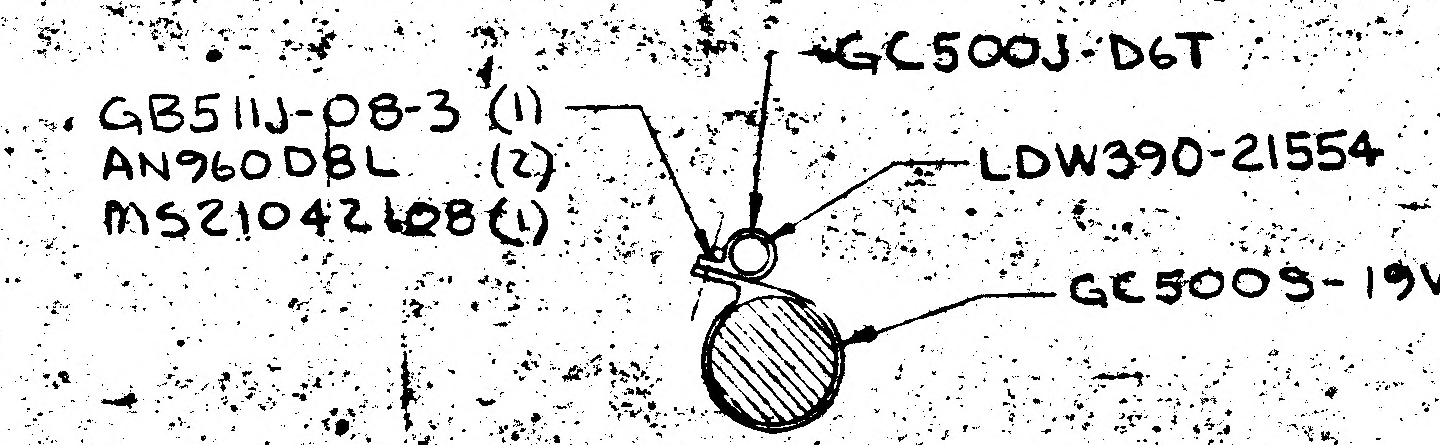
GC500J-D6T
GB511J-08-3 (1)
AN960DBL (2)
MS21042L08(1)
LDW390-21554
GC5005-19W

VIEW BX-BX
(TYP 2 PLACES)
ZONE 34C SH6

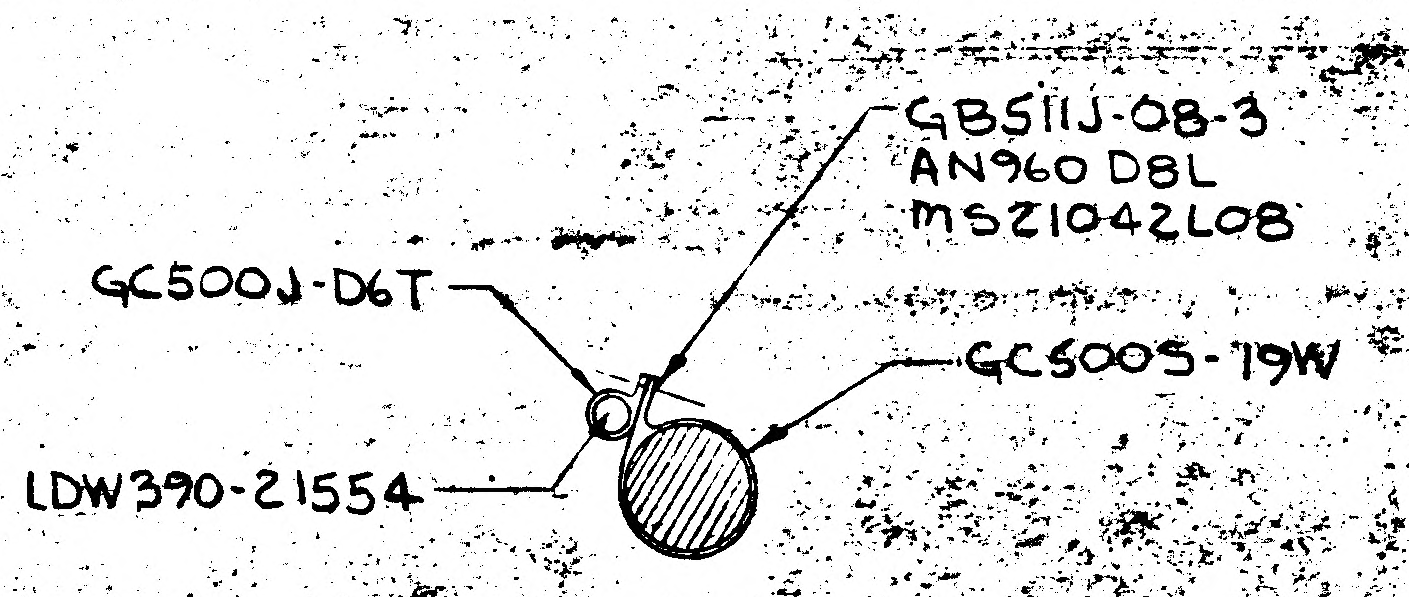
GB511J-08-3
AN960 DBL
MS21042L08
GC500J-D6T
GC5005-19W
LDW390-21554

VIEW BY-BY
ZONE 34C SH6

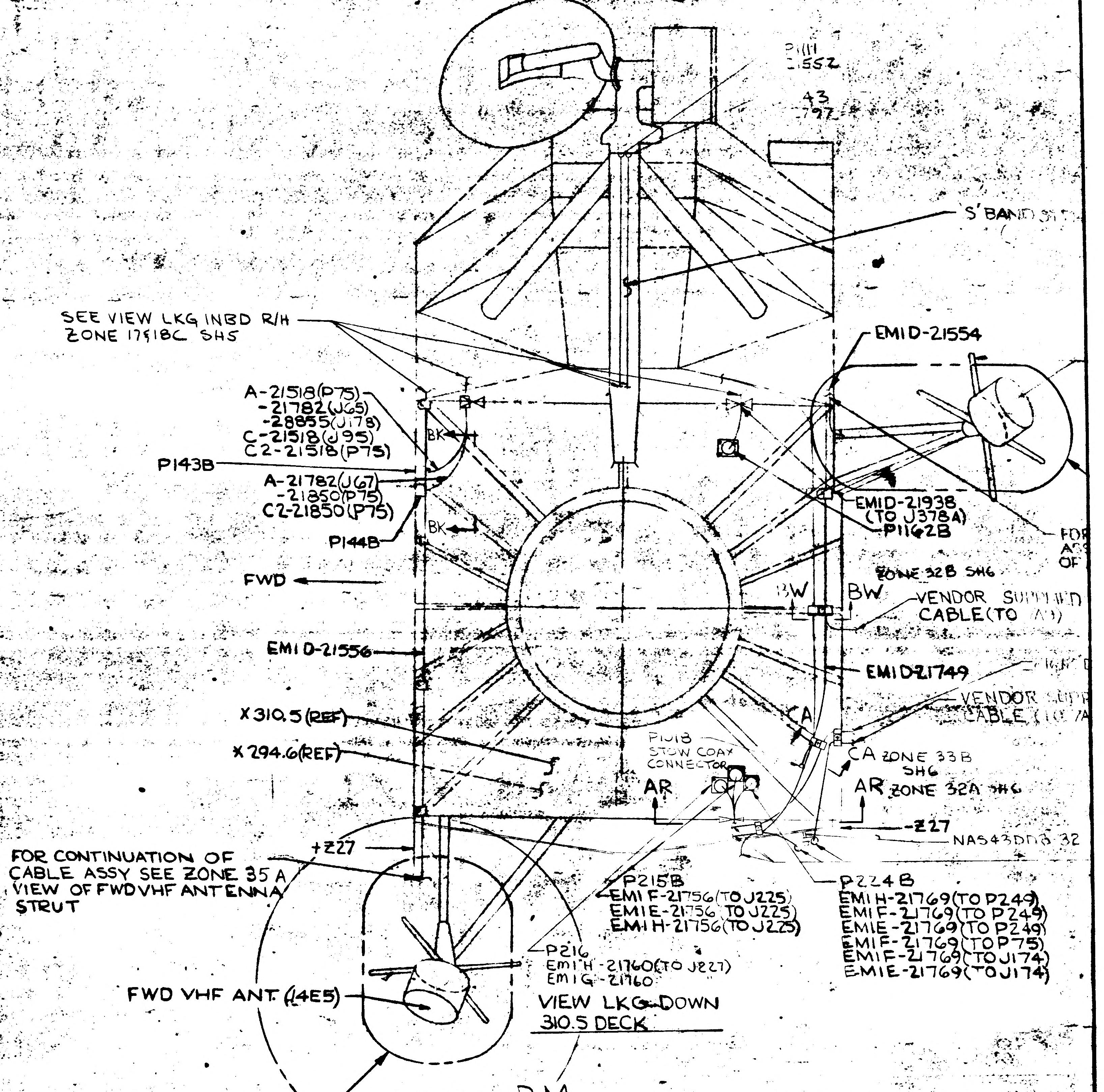
P111
552
43
S BAND
SEE VIEW LKG INBD R/H ZONE 17&18C SH5
EMID-21554
A-21518(P75)
-21782(J65)
-28855(J178)
C-21518(J95)
C2-21518(P75)
P143B
A-21782(J67)
-21850(P75)
C2-21850(P75)
BK
BK
EMID-21938 (TO J378A)
P1162B
P144B
FWD
BW
ZONE 32B SH6
VENDOR SUPPLIED CABLE (TO A1)
EMID-21556
EMID-21749
VENDOR SUPPLIED CABLE
X310.5(REF)
X294.6(REF)
P1113 STOW COAX CONNECTOR
AR
CA
CA ZONE 33B SH6
AR ZONE 32A SH6
-Z27
NAS43DD3-32
+Z27
FOR CONTINUATION OF CABLE ASSY SEE ZONE 35A VIEW OF FWD VHF ANTENNA STRUT
P215B
EMIF-21756(TO J225)
EMIE-21756 TO J225
EMIH-21756(TO J225)
P224B
EMIH-21769(TO P249)
EMIF-21769(TO P249)
EMIE-21769(TO P249)
EMIF-21769(TO P75)
EMIE-21769(TO J174)
EMIE-21769(TO J174)
P216
EMIH-21760(TO J227)
EMIG-21760
FWD VHF ANT (14E5)

VIEW LKG-DOWN
310.5 DECK

SEE DETAIL BM
ZONE 35A SH6

Z270

SEE VIEW CS-CS
ZONE 31A SH 6
E3

NAS43DD3-32(1)
21560 D

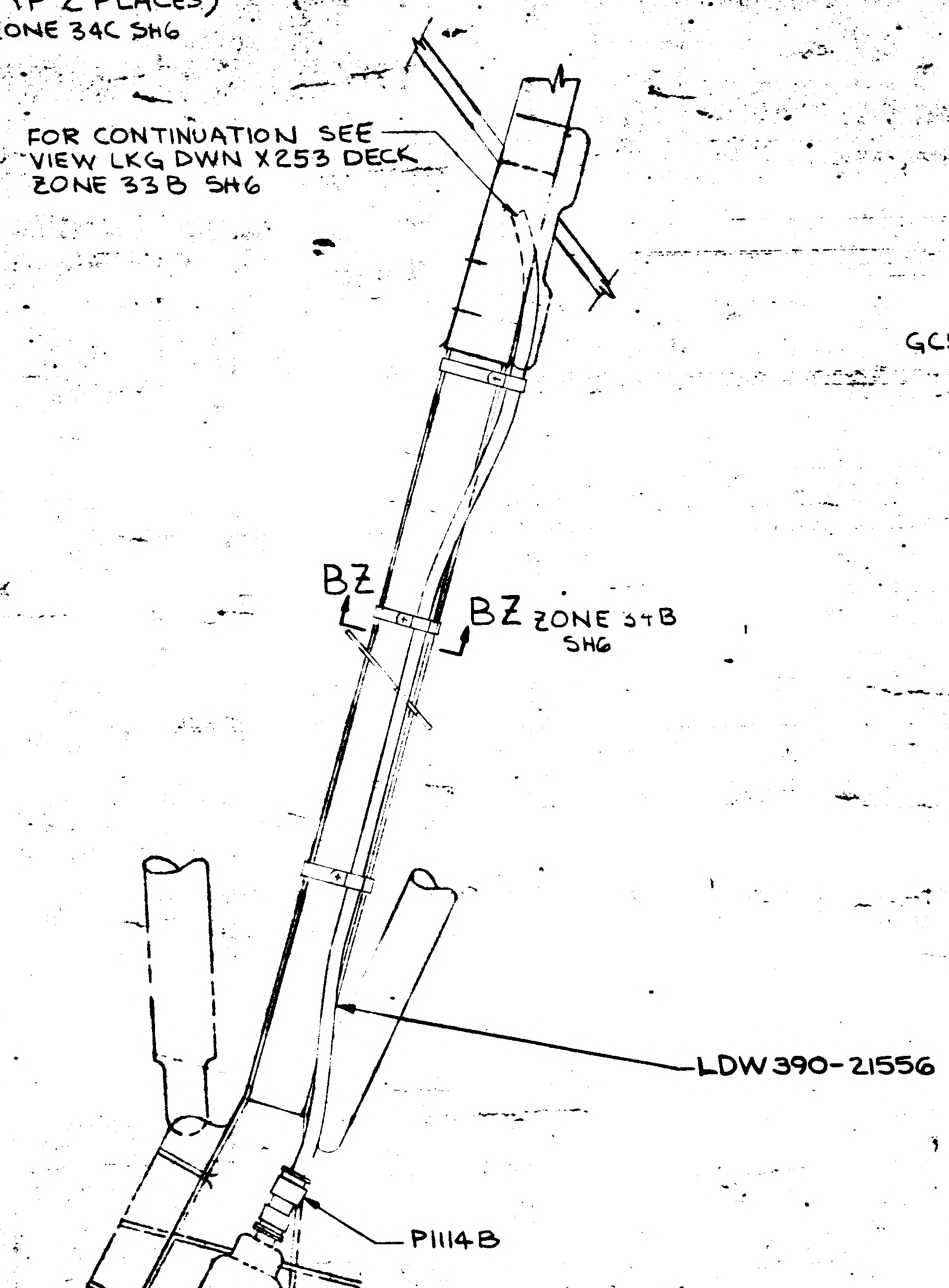
FOR CONTINUATION SEE VIEW LKG DWN X253 DECK ZONE 33B SH6
BZ
BZ ZONE 35B SH6
LDW390-21556
P1114B

DETAIL BM
ZONE 33B SH6

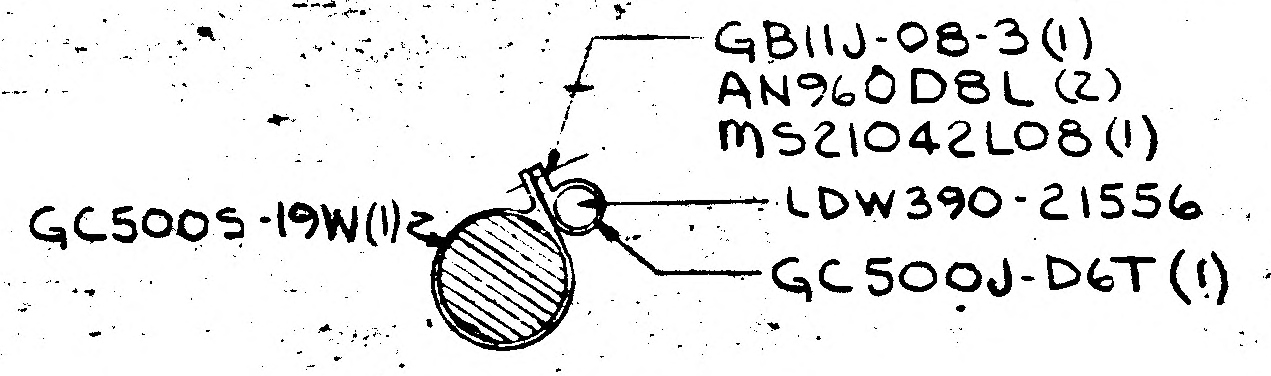
GB11J-08-3(1)
AN960DBL (2)
MS21042L08(1)
GC5005-19W(1)
LDW390-21556
GC500J-D6T (1)

VIEW BZ-BZ
ZONE 35A SH6
(TYP 3 PLACES)

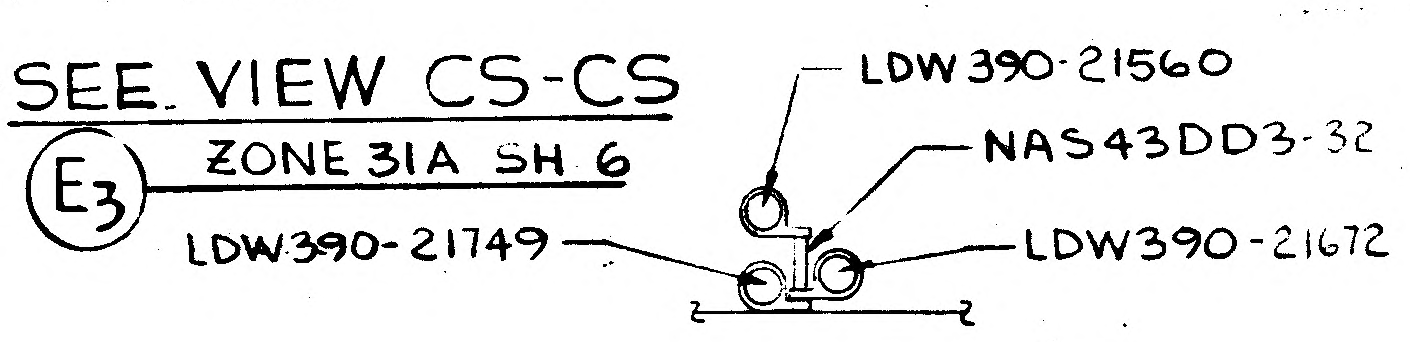
LDW390-21560
NAS43DD3-32
LDW390-21749
LDW390-21672

VIEW CA-CA
ZONE 32B SH6

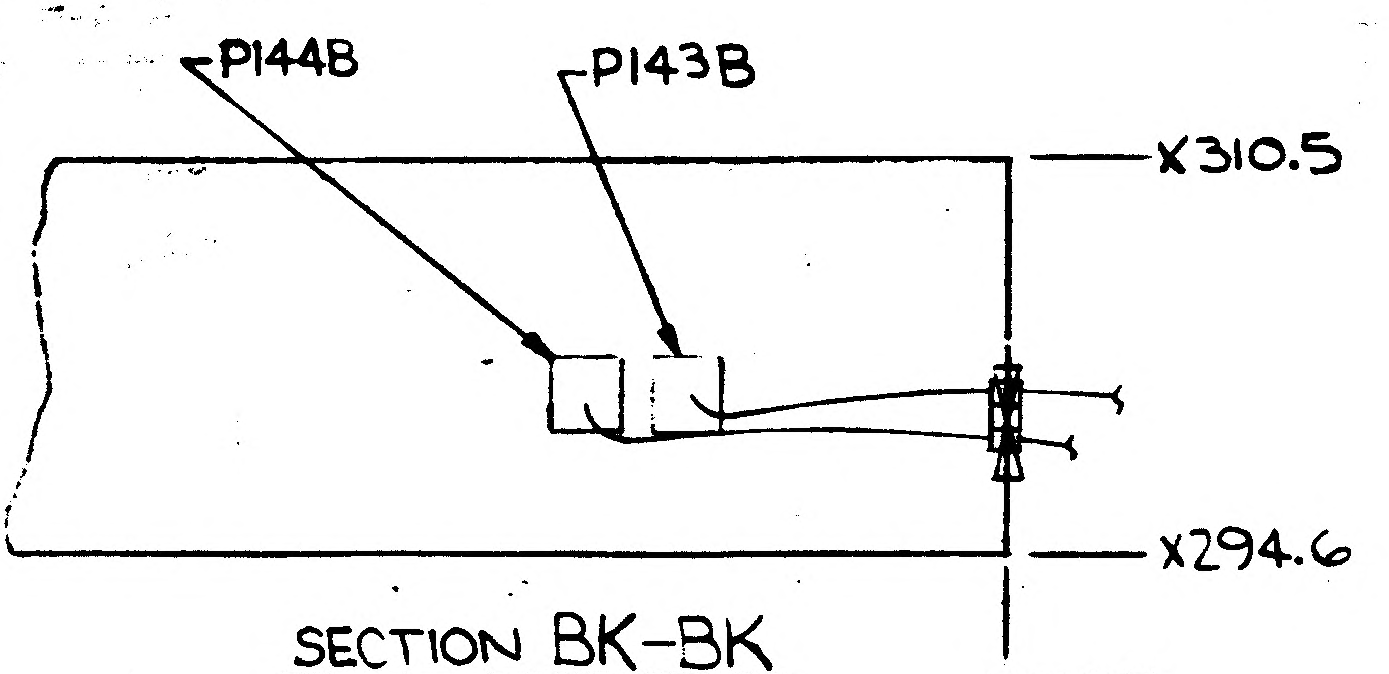
P144B
P143B
X310.5
X294.6
Y17.25

SECTION BK-BK
(ZONE 33C)

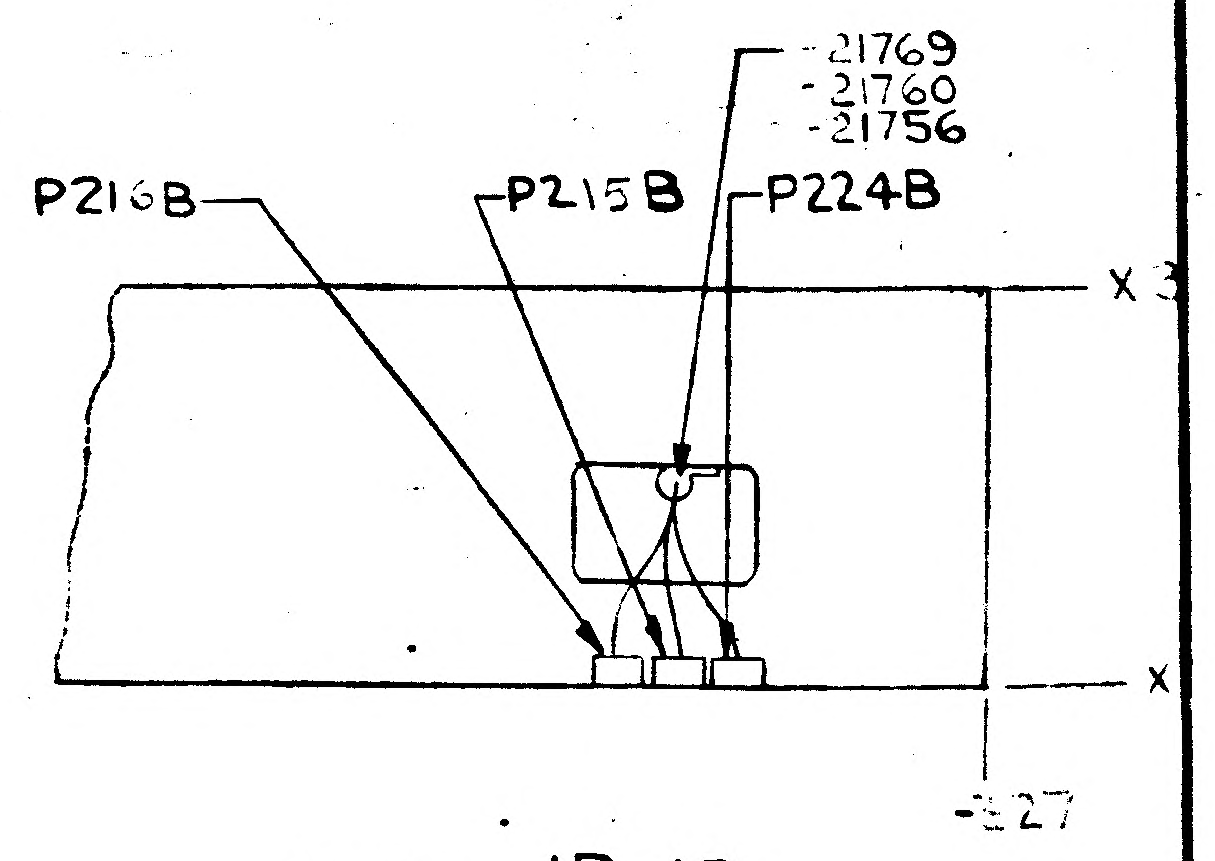
-21769
-21760
-21756
P216B
P215B
P224B
X3
-Z27

SECTION AR-AR
(ZONE 32B)

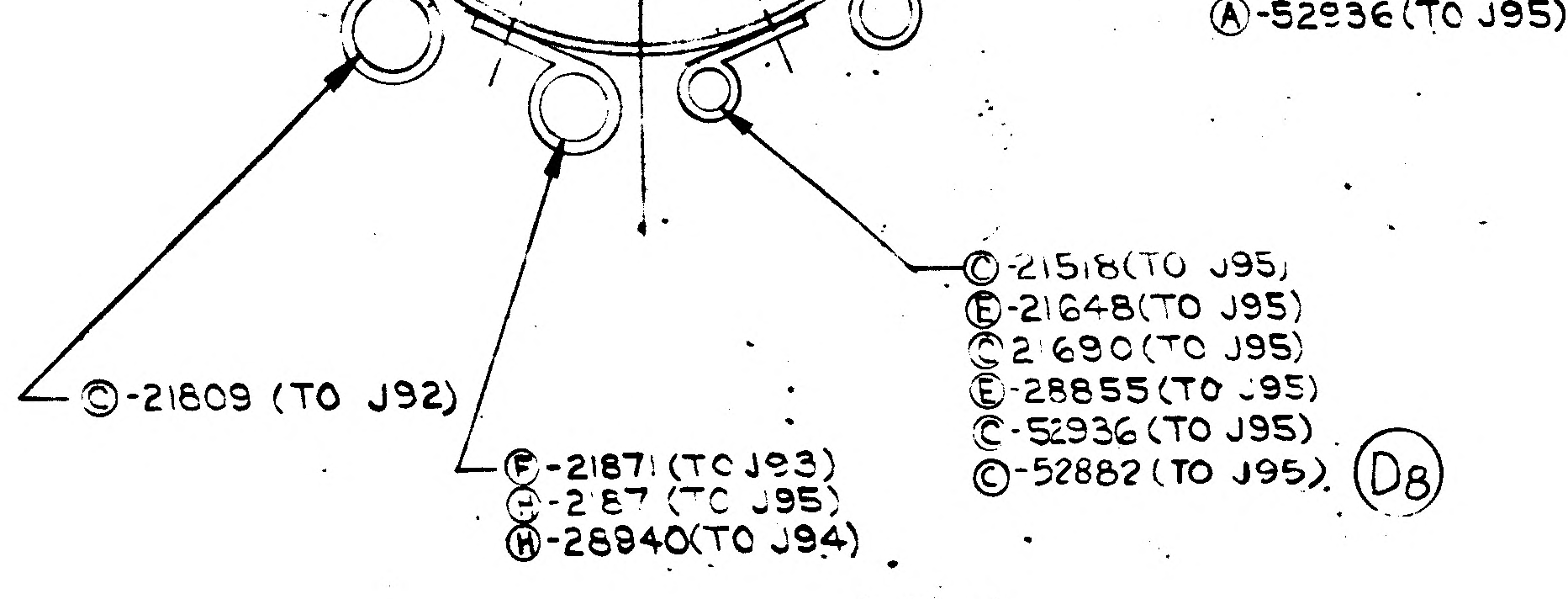
Ⓐ-28940(TO J95)
Ⓐ-52845(TO J95)
Ⓐ-21782(TO J95)
Ⓐ-52836(TO J95)
Ⓒ-21518(TO J95)
Ⓒ-21648(TO J95)
Ⓔ-21690(TO J95)
Ⓔ-28855(TO J95)
Ⓒ-52936(TO J95)
Ⓒ-52882(TO J95)
D8
Ⓓ-21609 (TO J92)
Ⓕ-21871(TO J93)
Ⓖ-21871(TO J95)
Ⓗ-28940(TO J94)

SECT. BB-BB

LDW280-52359-1 INSTL

01/02 NAS 9-1100

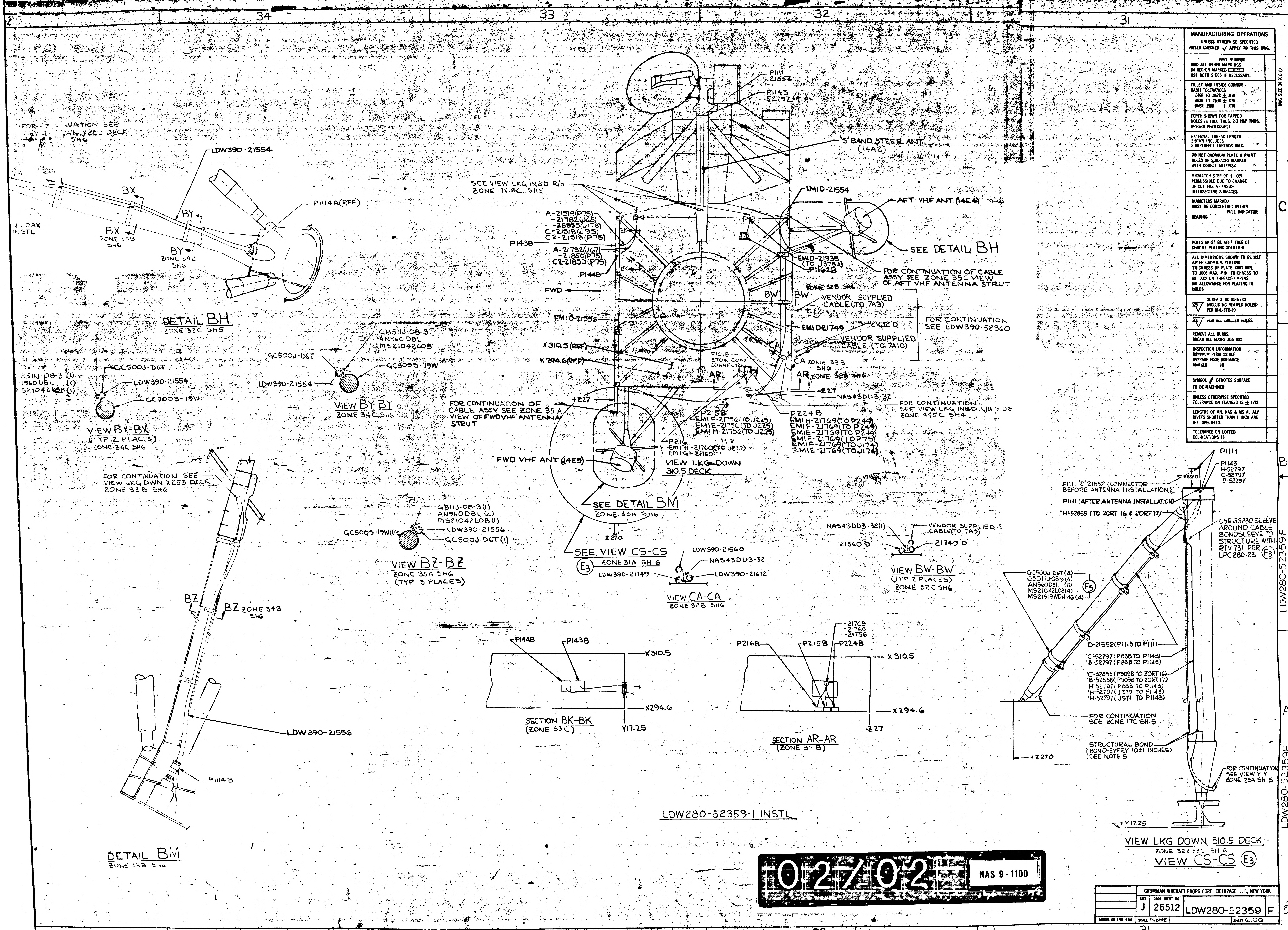

34
33
32
31
FOR CONTINUATION SEE VIEW LKG DWN X253 DECK ZONE SH6
LDW390-21554
BX
BX
ZONE 35B SH6
BY
BY
ZONE 34B SH6
P1114A(REF)
COAX INSTL
DETAIL BH
ZONE 32C SH5
GB511J-08-3
AN960 DBL
MS21042L08
GC500J-D6T
GC5005-19W
LDW390-21554
VIEW BY-BY
ZONE 34C SH6
GC500J-D6T
LDW390-21554
GC5005-19W
VIEW BX-BX
(TYP 2 PLACES)
ZONE 34C SH6
FOR CONTINUATION SEE VIEW LKG DWN X253 DECK ZONE 33B SH6
GB11J-08-3(1)
AN960DBL (2)
MS21042L08(1)
GC5005-19W(1)
LDW390-21556
GC500J-D6T(1)
VIEW BZ-BZ
ZONE 35A SH6
(TYP 3 PLACES)
BZ
BZ ZONE 34B SH6
LDW390-21556
P1114B
DETAIL BM
ZONE 35B SH6
P1111
21552
P1143
52797
'S' BAND STEER ANT.
(14A2)
SEE VIEW LKG INBD R/H ZONE 17&18C SH5
A-21518(P75)
-21782(J65)
-28855(J178)
C-21518(J75)
C2-21518(P75)
P143B
A-21782(J67)
-21850(P75)
C2-21850(P75)
P144B
BK
BK
FWD
EMID-21554
AFT VHF ANT.(14E4)
SEE DETAIL BH
EMID-21938
(TO J378A)
P1162B
FOR CONTINUATION OF CABLE ASSY SEE ZONE 35C VIEW OF AFT VHF ANTENNA STRUT
ZONE 32B SH6
BW
BW
VENDOR SUPPLIED CABLE (TO 7A9)
EMID-21556
EMID-21749
-21672'D'
FOR CONTINUATION SEE LDW390-52360
VENDOR SUPPLIED CABLE (TO 7A10)
X310.5(REF)
X294.6(REF)
P1018 STOW COAX CONNECTOR
CA
CA ZONE 33B SH6
AR
AR ZONE 32B SH6
Z27
NAS43DD3-32
+Z27
FOR CONTINUATION OF CABLE ASSY SEE ZONE 35A VIEW OF FWD VHF ANTENNA STRUT
P215B
EMI F-21756(TO J225)
EMI E-21756(TO J225)
EMI H-21756(TO J225)
P224B
EMI H-21769(TO P249)
EMI F-21769(TO P249)
EMI E-21769(TO P249)
EMI F-21769(TO P75)
EMI F-21769(TO J174)
EMI E-21769(TO J174)
FOR CONTINUATION SEE VIEW LKG INBD L/H SIDE ZONE 45C SH4
P216
EMI H-21760(TO J227)
EMI G-21760
FWD VHF ANT (14E5)
VIEW LKG DOWN 310.5 DECK
SEE DETAIL BM
ZONE 35A SH6
Z270
SEE VIEW CS-CS
ZONE 31A SH 6
E3
LDW390-21560
NAS43DD3-32
LDW390-21749
LDW390-21672
VIEW CA-CA
ZONE 32B SH6
NAS43DD3-32(1)
VENDOR SUPPLIED CABLE (TO 7A9)
21560'D'
21749'D'
VIEW BW-BW
(TYP 2 PLACES)
ZONE 32C SH6
P144B
P143B
X310.5
X294.6
Y17.25
SECTION BK-BK
(ZONE 33C)
-21769
-21760
-21756
P216B
P215B
P224B
X310.5
X294.6
Z27
SECTION AR-AR
(ZONE 32B)
LDW280-52359-1 INSTL
P1111
P1143
H-52797
C-52797
B-52797
3" REQ'D
P1111 'D'21552 (CONNECTOR BEFORE ANTENNA INSTALLATION)
P1111 (AFTER ANTENNA INSTALLATION)
'H'52858 (TO 20RT 16 & 20RT 17)
USE GS630 SLEEVE AROUND CABLE BONDSLEEVE TO STRUCTURE WITH RTV 731 PER LPC280-23
F3
GC500J-D6T(4)
GB511J-08-3(4)
AN960DBL (8)
MS21042L08(4)
MS21919WDH-46(4)
F5
'D'21552(P1113 TO P1111)
'C'52797(P83B TO P1143)
'B'52797(P83B TO P1143)
'C'52858(P909B TO 20RT16)
'B'52858(P909B TO 20RT16)
'H'52797(P83B TO P1143)
'H'52797(J379 TO P1143)
'H'52797(J371 TO P1143)
FOR CONTINUATION SEE ZONE 17C SH.5
STRUCTURAL BOND (BOND EVERY 10±1 INCHES) (SEE NOTE 5)
+Z27.0
FOR CONTINUATION SEE VIEW Y-Y ZONE 25A SH.5
+Y17.25
VIEW LKG DOWN 310.5 DECK
ZONE 32 & 33C SH. 6
VIEW CS-CS
E3
C
B
A
LDW280-52359F
LDW280-52359F
DWG SIZE 34 X 60
PRINTING INFO ONLY
FULL SIZE SHEET AREA (36 X 72)
1/2 SIZE SHEET AREA (1/4 OF FULL)
24 SQ. FT.
PRINT TRIM LINE

MANUFACTURING OPERATIONS
UNLESS OTHERWISE SPECIFIED
NOTES CHECKED ✓ APPLY TO THIS DWG.

PART NUMBER AND ALL OTHER MARKINGS IN REGION MARKED ▭ USE BOTH SIDES IF NECESSARY.

FILLET AND INSIDE CORNER RADII TOLERANCES
.016R TO .062R ± .010
.063R TO .250R ± .015
OVER .250R ± .030

DEPTH SHOWN FOR TAPPED HOLES IS FULL THDS. 2-3 IMP THDS. BEYOND PERMISSIBLE.

EXTERNAL THREAD LENGTH SHOWN INCLUDES 2 IMPERFECT THREADS MAX.

DO NOT CADMIUM PLATE & PAINT HOLES OR SURFACES MARKED WITH DOUBLE ASTERISK.

MISMATCH STEP OF ± .005 PERMISSIBLE DUE TO CHANGE OF CUTTERS AT INSIDE INTERSECTING SURFACES.

DIAMETERS MARKED MUST BE CONCENTRIC WITHIN FULL INDICATOR READING

HOLES MUST BE KEPT FREE OF CHROME PLATING SOLUTION.

ALL DIMENSIONS SHOWN TO BE MET AFTER CADMIUM PLATING. THICKNESS OF PLATE .0003 MIN. TO .0005 MAX. MIN. THICKNESS TO BE .0002 ON THREADED AREAS. NO ALLOWANCE FOR PLATING IN HOLES

125 SURFACE ROUGHNESS. INCLUDING REAMED HOLES PER MIL-STD-10

200 FOR ALL DRILLED HOLES

REMOVE ALL BURRS. BREAK ALL EDGES .015-.031

INSPECTION INFORMATION MINIMUM PERMISSIBLE AVERAGE EDGE DISTANCE MARKED IS

SYMBOL ƒ DENOTES SURFACE TO BE MACHINED

UNLESS OTHERWISE SPECIFIED TOLERANCE ON FLANGES IS ± 1/32

LENGTHS OF AN, NAS & MS AL ALY RIVETS SHORTER THAN 1 INCH ARE NOT SPECIFIED.

TOLERANCE ON LOFTED DELINEATIONS IS

02/02

NAS 9-1100

	GRUMMAN AIRCRAFT ENGRG CORP., BETHPAGE, L. I., NEW YORK			
	SIZE J	CODE IDENT NO. 26512	LDW280-52359	F
MODEL OR END ITEM	SCALE NONE		SHEET 6.00	

THIS IS AN ORIGINAL DWG

LDW280-52359 G

MODEL OR END ITEM	NEXT ASSY	MODULE OR SER NO	REQD PER MODULE OR END ITEM
LEM	LDW280 52001	LEM-2	1
PART NO LDW280-52359-1-3		GAEC SCH NO 30—	

TO BE REDRAWN ON PRODUCTION FORMAT ⑤

REV STATUS FOR DESCRIPTION REV SEE SUBQ SH

SHEET	1.00	2.00	2.01	3.00	3.01				
REV	G	F.	F	G	G				
SHEET			4.00	5.00	6.00	7.00	1.10	1.11	1.12
REV			G	G	F	G	B	B	B
SHEET	1.13	1.14	1.15	1.16	1.17	1.18			
REV	B	F	F	F	F	G			

LAST SECT LTR USED CU

LAST DASH NO USED -3

GRUMMAN REC INFO G

PRIM NO. K/001/SP 420 MP-16 9/27/8

UNLESS OTHERWISE SPECIFIED DIMENSIONS ARE IN INCHES

TOLERANCE UNLESS SPECIFIED FRACTIONS - DECIMALS - ANGLES

~ ~ ~

ORIG DWG AUTH

DETAIL SPEC REQUIREMENT

CLASS II ENGRG CHANGE

CLASS I ENGRG CHANGE

CONTRACT NO NAS9-1100

LINE ITEM 280

DOCUMENTATION TYPE III

DRAWN BY H.HELLER 9/12/66

WEIGHTS G. Albanese 9/26/66

LAYOUT BY D.COMMISSO

CHECKED BY

GR. LDR. JW/[illegible] 9/12/66

VDI [illegible]

STRUCT [illegible] 9-17

STRUCT

PROJ ENGR R.M. Carbee 9-17

RELI [illegible] J. Tagliaire 9/27/66

GRUMMAN AIRCRAFT ENGRG CORP
BETHPAGE L. I. NEW YORK

LINES INSTALLATION ELECTRONIC
ASCENT STAGE EXTERNAL MID SECT.

SIZE B

CODE IDENT No 26512

LDW280-52359

SCALE NONE

SHEET 1 OF

THIS IS AN ORIGINAL DRAWING

01

NAS 9-1100

REVISIONS

CHANGE LTR	ITEM NO.	SHEET NO.	ZONE	GRUMMAN INFO ONLY	DET SPEC	CLASS I	CLASS II	ENGRG ORDER	DESCRIPTION	EFFECTIVITY	DISPOSITION OF EXISTING PARTS		CHANGED BY AND DATE	ENGRG APPD	APPD
											REWORK	SCRAP			
F	5	2.00 6.00	31A					LCD 1860	(REF. EO E3) GC500J-D6T(4) WAS GC500AC-6(4) MS21919WDH46(4) WAS GC500AA-40(4)	LM-232)	✓		ARTEN 11-17-67		11-30-67
								C,D,E,F	ADDED: SH. 1.14 THRU 1.18 & 3.01 SH 1 OF 18 WAS SH. 1 OF 12 LAST SECT. LTR USED CS-CS WAS CC-CC						
									LAST SECTION LTR USED CU WAS CS						
G	1	5.00	23B 24A				✓	EO G1	ON -1 INSTL: ADDED VIEW CT-CT IN VIEW AL-AL, 20K1 & 20K3 (WAS) 20K3, 20K1 IN VIEW W-W, REROUTED: LDW390-21809.	LM-2(32)	✓		A A ARTEN 2-12-68		
	2	5.00	28B					EO G2	ON -1 INSTL; IN VIEW T-T, REROUTED LDW390-21824						
	3	5.00	22B					EO G3	ON -1 INSTL; REROUTED: LDW 390-21749						
	4	7.00	41A					EO G4	ON -3 INSTL; IN SECT AS-AS ADDED LDW 390-28402 (H&E) (REF) TO EXIST. CALLOUT & REMOVED PICTURE OF CLAMP.						
	5	3.00						EO G5	DELETED: REF. TO FIG. #4, 5 (ELEC EQUIPT.) IN NOTE 3	NOT REQD	NOT	REQ'D			
	6	4.00 3.01	3B 4C					EO G6	ADDED VIEW CU & NOTE 16	LM-2(32)	✓				

CHG APPROVED	LTR	GROUP LDR	VDI			STRUCTURES	STRUCTURES
	F	112167	67			11-3	
	G						

FOR CONTINUATION OF REVISIONS SEE SHEET

GRUMMAN AIRCRAFT ENGRG CORP, BETHPAGE, L. I., NEW YORK

SIZE	CODE IDENT NO.		
B	26512	LDW280-52359	G
SCALE NONE			SHEET 1.18

ENG 77.3 5-65

01

NAS 9-1100

NOTES:

1. COMMERCIAL PART, SEE SPECIFICATION CONTROL DRAWING BEFORE ORDERING.
2. ALL CONNECTOR AND EQUIPMENT DESIGNATION NUMBERS SHALL BE PLACED ON STRUCTURE ADJACENT TO THE RESPECTIVE ITEM PER LSP-14-002, TYPE VII, CLASS 2, MARK WITH 3/16 HIGH LETTERS.
3. ELECTRICAL BONDING AND GROUNDING OF COMPONENTS INSTALLED ON THIS DRAWING SHALL BE IN ACCORDANCE WITH LSP-14-13334, FIGURE ( ) AS LISTED BELOW:

GT11J	TERMINAL INSTL. (CLASS B, N-3 & N-4 GROUNDS)	FIGURE 2
CLASS "C"	HEAVY DUTY GROUNDS	FIGURE 3
CLASS "D"	BOLTED CONNECTIONS	
	~~ELECTRONIC EQUIPMENT~~	~~FIGURES 4 & 5~~
	GROUNDING RING	FIGURE 8
	ELECTRICAL RECEPTACLES	FIGURE 10

4. AFTER COMPLETION OF GROUNDING INSTALLATION AND INSTALLATION OF ALL TERMINAL LUGS REQUIRED, BRUSH COAT THE ENTIRE ASSEMBLY PER LSP-14-14201 (USE EPON 919). ALL SURFACES ARE TO BE CLEANED PER LSP-14-7011 PRIOR TO COATING.
5. SELECTION AND INSTALLATION OF LINE CLAMPS, CLAMP ATTACHING HARDWARE, ANTI CHAFE SLEEVE, TAPE, GROMMETS, LOCKWIRE & STRUCTUAL SUPPORT BONDING SHALL BE ACCORDANCE WITH LPC280-23 EXCEPT AS NOTED.
6. SPECIFICATION LSP-390-002 SHALL BE USED IN CONJUNCTION WITH THIS INSTALLATION.
7. ~~TORQUE MS21043-4 NUTS ON MAIN TERMINALS OF ALL ECA UNITS, RELAY JUNCTION BOXES AND DEAD FACE RELAY UNIT TO 60 ± 5 INCH POUNDS.~~
8. ~~UPON INSTALLATION OF TERMINAL LUGS ON BATTERIES, ECA'S, RELAY JUNCTION BOXES, DEAD FACE RELAY UNIT AND CIRCUIT BREAKERS IMMEDIATELY CONFORMAL COAT AS FOLLOWS:~~
   - ~~A. APPLY PRIMER PER LSP-14-1-201. CARE MUST BE TAKEN NOT TO APPLY TOO HEAVY A COAT OF PRIMER.~~
   - ~~B. AFTER ALLOWING A MINIMUM OF 30 MINUTES DRYING TIME FOR PRIMER, MIX (EC16-3A B) SEALANT COMPOUND PER LSP-14-1-201 AND APPLY FIRST COATING OVER ALL EXPOSED SURFACES.~~
   - ~~C. AFTER FIRST COATING CURES, APPLY SECOND AND THEN THIRD COAT OF THE SAME SEALANT COMPOUND ALLOWING 24 HOURS CURING TIME BETWEEN COATS PER LSP-14-1-201. NOTE: CARE MUST BE TAKEN THAT EACH COAT COMPLETELY COVERS PRECEDING COAT AND ANY EXPOSED PRIMER.~~
9. ALL RECEPTACLES MOUNTED IN ACCORDANCE WITH THIS DRAWING ARE TO HAVE KEYWAYS POSITIONED IN THE +X OR +Z DIRECTION.
10. SUBSTITUTION OF NAS1132V*, AN525-832R* OR AN525-832-* BOLTS FOR THE GB511J-08-* BOLT IS PERMISSIBLE.
11. MS21919WDH CLAMPS & GC500S CLAMPS ARE INTERCHANGEABLE AND EITHER MAY BE USED IN THIS INSTALLATION.
12. ALL CABLE CALLOUTS ARE PREFIXED BY LDW390- AND ARE REF ONLY, EXCEPT LDW390-52014.

GRUMMAN AIRCRAFT ENGRG CORP., BETHPAGE, L. I., NEW YORK

SIZE	CODE IDENT NO.		
B	26512	LDW280-52359	G
SCALE		SHEET 3.00	

01

NAS 9-1100

NOTES: (CONT'D)

13. TO PREVENT CHAFFING AND RESTRAIN VIBRATION OF WIRING ADJACENT TO RIVETS, EDGES OF STRUCTURE ETC, BONDING PER LSP14-22500 (EPON 934) CURE RANGE I MAY BE APPLIED LOCALLY.
THIS METHOD IS NOT TO BE USED AS PRIMARY STRUCTURAL SUPPORT OF WIRING IN LIEU OF CLAMPING INDICATED ON DWG. COMPLIANCE WITH LSP14-7100 NOT REQUIRED ON WIRE SURFACES.

14. ALL SPLICES OR BUNDLE OF SPLICES IN ENGINE COMPARTMENT SHALL BE WRAPPED WITH A HELICAL WRAP OF ALUMINUM TAPE TO EXTEND 2" PAST LAST SPLICE ON EITHER SIDE.- 25% MIN. OVERLAP OF TAPE IS REQUIRED.

15 MOLD USING FULL BLATE II 183K2 (SUPPLIED BY: W. P. FULLER CO.-CODE IDENT NO. 91426

16. APPLY 3M SERIES 400 VELVET COATING TO BRACKET 1" x 1/4". AREA COLOR YELLOW PT. NO. 401-F1 PER LSP14-4503.

GRUMMAN AIRCRAFT ENGRG CORP., BETHPAGE, L. I., NEW YORK

SIZE	CODE IDENT NO.		
B	26512	LDW280 52359	G Ⓖ
SCALE		SHEET 3.01	

ENG 73.1 6-64

01

NAS 9-1100

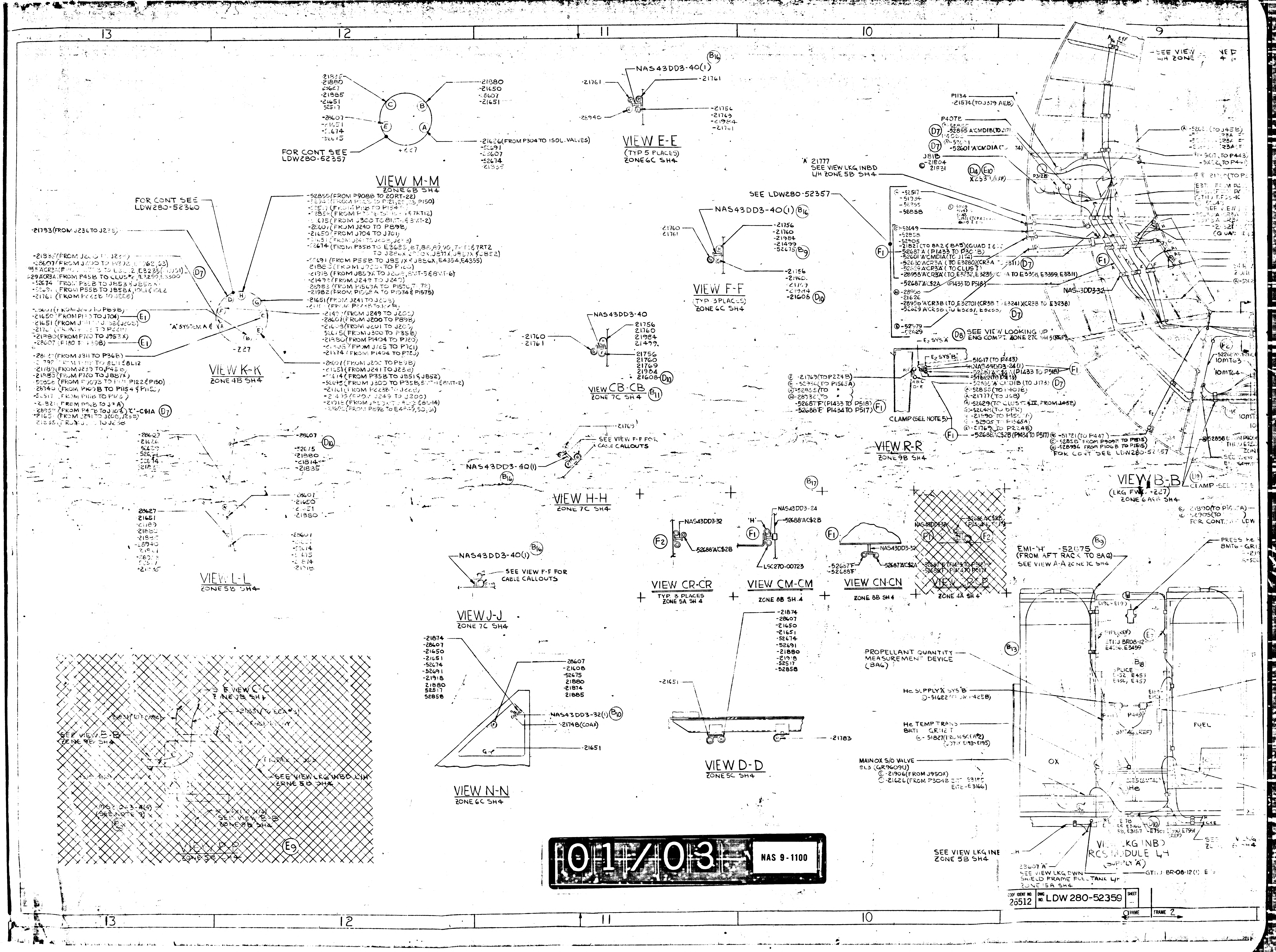

13
12
11
10
9
VIEW M-M
ZONE 6B SH4
FOR CONT SEE LDW280-52357
FOR CONT SEE LDW280-52360
VIEW K-K
ZONE 4B SH4
'A' SYSTEM A & B
-227
VIEW E-E
(TYP 5 PLACES)
ZONE 6C SH4
NAS43DD3-40(1)
VIEW F-F
(TYP 3 PLACES)
ZONE 6C SH4
SEE LDW280-52357
VIEW CB-CB
ZONE 7C SH4
NAS43DD3-40
VIEW H-H
ZONE 7C SH4
SEE VIEW F-F FOR CABLE CALLOUTS
VIEW L-L
ZONE 5B SH4
VIEW J-J
ZONE 7C SH4
VIEW N-N
ZONE 6C SH4
NAS43DD3-32(1)
-21748(COAX)
VIEW D-D
ZONE 5C SH4
VIEW CR-CR
TYP 3 PLACES
ZONE 5A SH 4
NAS43DD3-32
-52688'A'C$2B
VIEW CM-CM
ZONE 8B SH 4
NAS43DD3-24
LSC270-00723
VIEW CN-CN
ZONE 8B SH 4
-52687'A'C$2A
VIEW CP-CP
ZONE 4A SH 4
VIEW R-R
ZONE 9B SH4
CLAMP (SEE NOTE 5)
SEE VIEW LOOKING UP ENG COMPT. ZONE 27C SH 5
'A' 21777 SEE VIEW LKG INBD L/H ZONE 5B SH4
VIEW B-B
(LKG FWD -227)
ZONE 6 A&B SH4
FOR CONT SEE LDW280-52357
EMI-'H' -52675 (FROM AFT RACK TO 8A6) SEE VIEW A-A ZONE 7C SH4
PROPELLANT QUANTITY MEASUREMENT DEVICE (8A6)
He SUPPLY 'A' SYS 'B'
He TEMP TRANS
MAIN OX S/O VALVE
FUEL
OX
He
VIEW LKG INBD RCS MODULE L4 (SUPPLY 'A')
SEE VIEW LKG INBD L/H ZONE 5B SH4
SEE VIEW LKG DWN SHIELD FRAME FUEL TANK L/H ZONE 5A SH4
SEE VIEW C-C ZONE 7B SH4
SEE VIEW B-B ZONE 9E SH4
SEE VIEW LKG INBD L/H ZONE 5B SH4
SEE VIEW B-B ZONE 9B SH4
VIEW P-P
ZONE 5C SH4
01/03
NAS 9-1100
CODE IDENT NO 26512
DWG NO LDW 280-52359
SHEET
FRAME
FRAME 2

9
8
5
7
6
4
SEE VIEW LKG DWN 30.5 DECK 33B SH6
SEE VIEW LKG DWN X310.5 DECK ZONE 32B SH6
SEE LDW280-52357
F.G.H.D
ZONE 9B SH4
ZONE 11C E SH4
ZONE 11B SH4
ZONE 11C SH4
-52675
Z0.0(REF)
+Z27.0(REF)
SEE VIEW OF RCS MOD L/H ZONE 9A SH4
VIEW A-A
ZONE 5C SH4
NAS43DD3-32
SEE VIEW LKG INBD L/H ZONE 5B SH4
SEE VIEW LKG INBD L/H ZONE 5B SH. 4
SEE VIEW LKG UP ENG COMPT ZONE 27C SH5
LSC270-00723 CLAMP SEE NOTE 5
ZONE 10B SH4
Y0.0
10MT63
10MT64
10MT62
10MT60
VIEW B-B
(LKG FWD +Z21)
ZONE 10B SH 5
NAS43DD3-32
ZONE 10B SH 5
SEE VIEW LKG UP ENG COMP ZONE 27B SH 5
PUSH COMBUST CUT-OFF CONTROL UNIT
-52934(FROM P106 TO P1565A)
-28732(FROM P1569. TO
J503
J511
J512
GB51IJ-04-2(4)
AN960D4L
MS21042L04(4)
VIEW AK-AK
ZONE 6C SH4
-21804
SEE VIEW LKG INBD L/H ZONE 5B SH4
-21831(FROM ECA"3&4")
-21777(TO J34 RJB)
-21777(TO P14B R/H)
-52648(TO J114)
VIEW C-C
ZONE 5B SH4
P1570
-28983(FROM P1569A)
P1571
-28983(FROM P1569)
GB51IJ-08-4(1)
MS21042L08(1)
AN960D8L(2)
GC5005-20W(1)
-52649'C'
-21916'E'
VIEW BV-BV
(TYP 5 PLACES)
ZONE 8B SH4
GC5005-16W
GB11J-08-4(1)
MS21042L08(1)
AN960D8L(2)
-52649'C'
-21916'E'
VIEW CC-CC
(TYP 2 PLACES)
ZONE 8B SH4
PRESS He REG OUTPUT 8MT6-GK1201P
-21918(FROM J859A)
-52643(FROM P98)
CC
ZONE 7B SH4
BV
BV-ZONE 7B SH4
SEE VIEW LKG INBD L/H ZONE 5A SH5
He PRESS SUPPLY A SYS A
HP He PRESS TRANS
TEMP TRANS FUEL TANK
MAIN FUEL S/O VALVE
-21906(FROM J950A)
-21626(FROM P304B E117-E3158)
X253 (REF)
FUEL
SEE VIEW LKG INBD L/H ZONE 5B SH4
SPLICE AREA
E918
-21906
LOW LEVEL SENSOR (10MT41)
TEMP XDUCER (10MT39)
-52649
-21916
SECT. CH-CH
ZONE 27C SH 5
NAS43DD3-32
FOR EO REF ONLY
EM1 "H"
-52945(H)
SECT. CG-CG
TYP 3 PLACES
ZONE 21A SH 5
VIEW LKG UP
FUEL TANK L/H SIDE
ROTATED 90° CW
NAS43DD3-24(1)
'E' & 'C'
PIPE (REF)
NAS43DD3-77(1)
VIEW CK-CK
ZONE 9B SH 4
VIEW CJ-CJ
ZONE 5A SH 4
LDW280-52359-1 INSTL
-21831
NAS43DD3-24
-52630'A'CR3A
-28958'A'CR3A
-52687AC&2A (P1433 TO P513)
-52647AC&2A (P1433 TO P3048)
VIEW CE-CE
(TYP 4 PLACES)
ZONE 4A SH 4
P124
FUEL TO INTERFACE
+Z27.00
ZONE 9B SH4
SEE VIEW B-B ZONE 9B SH4
-51721 (FROM P118 TO P447 (STAGING NUT)
SEE VIEW B-B ZONE 9B SH4
-21821 'C' (TO 8A2 & 8A5) (QUAD I & IV)
X233.50(REF)
FOR CONTINUATION SEE LDW280-52357
J818
-21804(TO DFR-3&4)
X253.50(REF)
FOR CONTINUATION SEE VIEW B-B
P407B
-52855(TO J113 R/H)
P1134
-21574(TO J319 AEB'S BAND XCVR)
P312B
J96B
-21821(TO J3A AC INV"IAEB)
J45B
X277.138(REF)
-52630A-CR3A (TO E3230, E3707, E3231)
SEE DETAIL BM ZONE 35A SH6
X294.643(REF)
SEE LDW280-52357
GT11J-3R08-10
ZONE 7C SH4
ZONE 11A SH4
-Z27.0(REF)
P366A
-21612(TO P364A)
P364
-21781
Z0.0
P1152
-21859
J1150
-21818
P366
-21749(TO P36
-21784
C-BAND TRANSPONDER
WATER (REF)
GT11J-3R08-10
GT11J-3R08-12
P365A
-21748(TO P364B)
ZONE 12B SH5
ZONE 11A SH4
P443 ON RCS MOD
-51617(FROM P423A)
SEE RCS MOD L/H ZONE 9A SH4
P441 ON RCS MOD
DEAD FACE RELAY
PIGTAIL
-52687 F(P1433 TO P518)
-52688 F(P1434 TO P517)
ZONE 12B SH4
-21624(TO 8L3 & 8L4)
-21831
-52648
CLAMPS (GC5005)(5) (SEE NOTE 5)
-21777(TO J68)
-21574
ZONE 2C SH4
-21821 'C' QUAD II & III
LDW390-52014
SEE VIEW LKG ENG COMPT ZONE SH 5
ZONE 7A SH 4
-52905(FROM P10 BTL P1352)
FUEL
VENDOR SUPPLIED CABLE
-52517(FROM P111B TO P2
-52629(FROM P45B)
LKG INBD H SIDE
FUEL TANK LOW LEVEL SENSOR
SEE VIEW LKG UP FUEL TANK ZONE 7A SH4
TEMP FUEL TANK
-21906(FROM J950 XS
SEE VIEW LKG UP FUEL TANK ZONE 7A SH4
-Z27.00
FRAME
FRAME 4
02/03
NAS 9-1100
CODE IDENT NO 26512
DWG NO LDW 280-52359
SHEET 2
DW 280-52359
SHEET 2
E7903

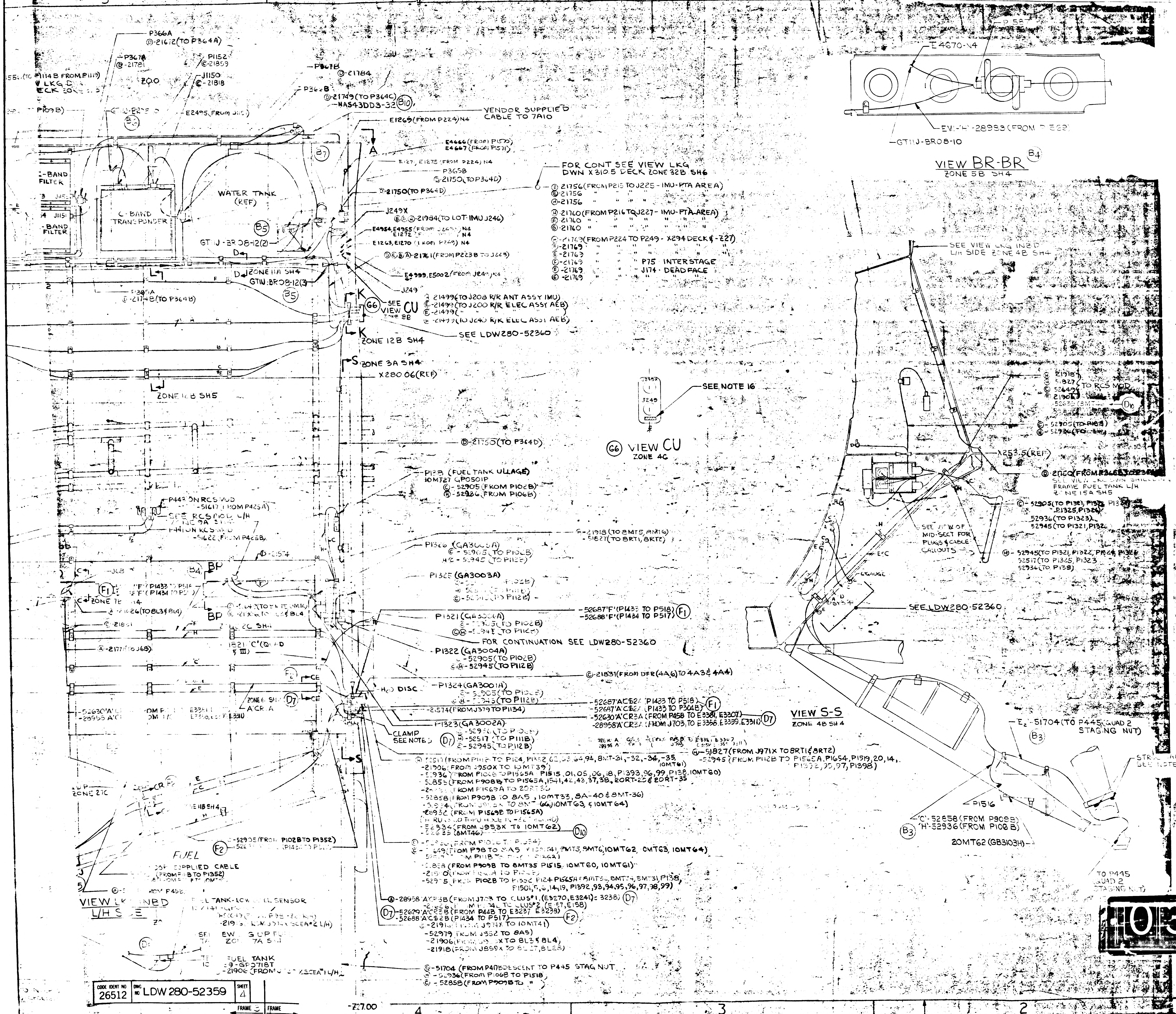
5
4
3
2
1
P366A
Ⓓ-21672(TO P364A)
P367A
Ⓓ-21781
P1152
Ⓒ-21859
J1150
Ⓒ-21818
P367B
Ⓓ-21784
P366B
Ⓓ-21749(TO P364C)
NAS43DD3-32 B10
(TO P1114 B FROM P1119)
VIEW LKG D
DECK ZONE
P109B)
E2495(FROM J1151)
C-BAND FILTER
J1152
J1151
C-BAND FILTER
C-BAND TRANSPONDER
WATER TANK (REF)
B5
B7
GT11J-BR08-12(2)
ZONE 11A SH4
GT11J-BR08-12(3)
P365A
Ⓓ-21748(TO P364B)
ZONE 10B SH5
VENDOR SUPPLIED CABLE TO 7A10
E1269(FROM P224)N4
E4666(FROM P1570)
E4667(FROM P1571)
E1271, E1275(FROM P224) N4
P365B
Ⓓ-21750(TO P364D)
Ⓓ-21750(TO P364D)
J249X
ⒺⒻⒽ-21984(TO LOT-IMU J246)
E4954, E4955(FROM J249X) N4
E1272
E1263, E1270(FROM P249) N4
ⒼⒺⒷⒶ-21761(FROM P223B TO J223)
E4999, E5002(FROM J249) N4
J249
Ⓒ-21499(TO J208 R/R ANT ASSY IMU)
Ⓔ-21499(TO J200 R/R ELEC ASSY AEB)
Ⓕ-21499(" " " ")
Ⓗ-21499(TO J240 R/R ELEC ASSY AEB)
G6 SEE VIEW CU ZONE 3B
ZONE 12B SH4
SEE LDW280-52360
ZONE 3A SH4
X280.06(REF)
FOR CONT SEE VIEW LKG DWN X310.5 DECK ZONE 32B SH6
Ⓕ-21756(FROM P215 TO J225-IMU-PTA AREA)
Ⓔ-21756 " " " " "
Ⓗ-21756 " " " " "
Ⓗ-21760(FROM P216 TO J227-IMU-PTA AREA)
Ⓕ-21760 " " " " "
Ⓖ-21760 " " " " "
Ⓗ-21769(FROM P224 TO P249-X294 DECK & -Z27)
Ⓕ-21769 " " " " "
Ⓔ-21769 " " " " "
Ⓕ-21769 " " " P75 INTERSTAGE
Ⓔ-21769 " " " J174 DEAD FACE
Ⓔ-21769 " " " "
J249X
J249
SEE NOTE 16
G6 VIEW CU
ZONE 4C
Ⓓ-21750(TO P364D)
P138 (FUEL TANK ULLAGE)
10MT27 GP0501P
Ⓒ-52905(FROM P102B)
Ⓗ-52936(FROM P106B)
P443 ON RCS MOD
-51617(FROM P425A)
SEE RCS MOD L/H ZONE 9A SH4
P441 ON RCS MOD
-51622(FROM P425B)
Ⓓ-21574
B4
BP
F1
-52687'F'(P1433 TO P518)
-52688'F'(P1434 TO P517)
ZONE 7E SH4
Ⓐ-21626(TO 8L3 & 8L4)
Ⓒ-51643(TO 8MT5, 8MT6)
Ⓔ-21906(TO 8L3 & 8L4)
Ⓒ-21851
ZONE 2C SH4
Ⓐ-2177(TO J68)
1821 'C'(QUAD III)
F2
CE
D7
ZONE 6 SH4
A'CR A
-52630'A'CR3A(FROM P458 TO E3381, E3307)
-28958'A'CR3A(FROM J703 TO E3356, E3359, E3311)
ZONE 27C
ZONE 11B SH4
-52905(FROM P102B TO P1352)
-52688(P1434 TO P517)
FUEL
SUPPLIED CABLE
(FROM P102B TO P1352)
Ⓐ-52630(FROM P458)
VIEW LKG INBD L/H SIDE
FUEL TANK-LOW LEVEL SENSOR
-21916(FROM J974X SCEA*2 L/H)
SEE VIEW LKG UP FUEL TANK ZONE 7A SH4
FUEL TANK
GP0718T
-21906(FROM SCEA*1 L/H)
Ⓗ-21918(TO 8MT5, 8MT6)
-51827(TO 8RT1, 8RT2)
P1326 (GA3005A)
Ⓒ-52905(TO P102B)
ⒽⒸ-52945(TO P112B)
P1325 (GA3003A)
Ⓒ-52905(TO P102B)
Ⓗ-52517(TO P111B)
Ⓒ-52945(TO P112B)
P1321 (GA3006A)
Ⓒ-52905(TO P102B)
ⒸⒽ-52945(TO P112B)
FOR CONTINUATION SEE LDW280-52360
P1322 (GA3004A)
Ⓒ-52905(TO P102B)
ⒸⒽ-52945(TO P112B)
Ⓒ-21831(FROM DFR(4A6) TO 4A3 & 4A4)
H2O DISC
P1324 (GA3001A)
Ⓒ-52905(TO P102B)
ⒸⒽ-52945(TO P112B)
-21574(FROM J379 TO P1134)
-52687'A'C$2A(P1433 TO P518)
-52687'A'C$2A(P1433 TO P304B)
-52630'A'CR3A(FROM P458 TO E3381, E3307)
-28958'A'CR3A(FROM J703, TO E3356, E3359, E3311)
D7
P1323 (GA3002A)
CLAMP SEE NOTE 5
Ⓒ-52936(TO P106B)
Ⓗ-52517(TO P111B)
Ⓒ-52945(TO P112B)
Ⓗ-52517(FROM P111B TO P124, P1352, 62, 63, 64, 94, 8MT-31, -32, -34, -35, 10MT61)
-21906(FROM J950X TO 10MT39)
-52936(FROM P106B TO P1565A P1515, 01, 05, 06, 18, P1393, 96, 99, P138, 10MT60)
-52855(FROM P908B TO P1565A, 1541, 42, 43, 37, 38, 20RT-25 & 20RT-35
-2 (FROM P1569A TO 20RT36
-52858(FROM P909B TO 8A5, 10MT33, 8A-40 & 8MT-36)
-52934(FROM J953X TO 8MT66, 10MT63, & 10MT64)
-28932 (FROM P1569B TO P1565A)
-52834(FROM J953X TO 10MT62)
-52635 (8MT46)
D10
Ⓒ-52936(FROM P106B TO P1354)
Ⓒ-51649(FROM P98 TO 8A5 8MT5, 8MT6, 10MT62, 10MT63, 10MT64)
-52517 (FROM P111B)
-52858 (FROM P909B TO 8MT35 P1515, 10MT60, 10MT61)
-52905(FROM P102B TO P1352 P124 P1565A 8MT32, 8MT34, 8MT31, P138, P1501, 5, 6, 14, 19, P1392, 93, 94, 95, 96, 97, 98, 99)
Ⓐ-28958'A'CR3B(FROM J703 TO CLUS*1, (E3270, E3241) E3238)
D7
-21626(FROM P424C TO CLUS*2 (E157, E158)
D7
-52629'A'CR3B(FROM P44B TO E3237 E3238)
-52688'A'C$2B(P1434 TO P517)
F2
Ⓔ-21916(FROM J974X TO 10MT41)
-52979(FROM J352 TO 8A5)
-21906(FROM J9 X TO 8L3 & 8L4)
-21918(FROM J859X TO 8L27, 8L28)
Ⓔ2-51704 (FROM P408 DESCENT TO P445 STAG NUT
Ⓗ-52936(FROM P106B TO P1518
Ⓒ-52858(FROM P909B TO "
-727.00
P587
E4670-N4
EMI-'H'-28983(FROM P1568)
GT11J-BR08-10
VIEW BR-BR
B4
ZONE 5B SH4
SEE VIEW LKG INBD L/H SIDE ZONE 4B SH4
Ⓗ 21918
Ⓗ 51827
Ⓒ 52649
Ⓔ 21906
TO RCS MOD
-52635 (8MT46)
D10
Ⓒ-52905(TO P103)
Ⓗ-52936(TO
X253.5(REF)
Ⓓ-21750(FROM P365B TO P364D)
SEE VIEW LKG DWN SHIELDING FRAME FUEL TANK L/H ZONE 15A SH5
Ⓒ-52905(TO P1321, P1322, P1324, P1325, P1326)
52936(TO P1323)
52945(TO P1321, P1326)
SEE VIEW OF MID-SECT FOR PLUGS & CABLE CALLOUTS
Ⓗ-52945(TO P1321, P1322, P1324, P1326)
52517(TO P1325, P1323
52936(TO P138)
E&C
GAUGE
SYS
SEE LDW280-52360
VIEW S-S
ZONE 4B SH4
Ⓗ-51827(FROM J971X TO 8RT1 & 8RT2)
-52945(FROM P112B TO P1565A, P1654, P1519, 20, 14, P1392, 95, 97, P1398)
'E2'-51704(TO P445 QUAD 2 STAGING NUT)
B3
STRUCTURAL SEE NOTE
P1516
'C'-52858(FROM P909B)
'H'-52936(FROM P106B)
B3
20MT62 (GB3103H)
TO P445 QUAD 2 STAGING NUT
FRAME 3
FRAME

CODE IDENT NO 26512 | DWG NO LDW280-52359 | SHEET 4

MANUFACTURING OPERATIONS
UNLESS OTHERWISE SPECIFIED
NOTES CHECKED APPLY TO THIS DWG.

PART NUMBER AND ALL OTHER MARKINGS IN REGION MARKED ▭ USE BOTH SIDES IF NECESSARY.

FILLET AND INSIDE CORNER RADII TOLERANCES
.016R TO .062R ±
.063R TO .250R ±
OVER .250R ±

DEPTH SHOWN FOR TAPPED HOLES IS FULL THDS. 2-3 IMP THDS BEYOND PERMISSIBLE.

EXTERNAL THREAD LENGTH SHOWN INCLUDES 2 IMPERFECT THREADS MAX.

DO NOT CADMIUM PLATE & PAINT HOLES OR SURFACES MARKED WITH DOUBLE ASTERISK.

MISMATCH STEP OF ± .005 PERMISSIBLE DUE TO CHANGE OF CUTTERS AT INSIDE INTERSECTING SURFACES.

DIAMETERS MARKED MUST BE CONCENTRIC WITHIN FULL INDICATOR READING

HOLES MUST BE KEPT FREE OF CHROME PLATING SOLUTION.

ALL DIMENSIONS SHOWN TO BE MET AFTER CADMIUM PLATING. THICKNESS OF PLATE .0003 MIN. TO .0005 MAX. MIN. THICKNESS TO BE .0002 ON THREADED AREAS. NO ALLOWANCE FOR PLATING IN HOLES

125 SURFACE ROUGHNESS INCLUDING REAMED HOLES PER MIL-STD-10

200 FOR ALL DRILLED HOLES

REMOVE ALL BURRS. BREAK ALL EDGES .015-.031

INSPECTION INFORMATION MINIMUM PERMISSIBLE AVERAGE EDGE DISTANCE MARKED IS

SYMBOL ƒ DENOTES SURFACE TO BE MACHINED

UNLESS OTHERWISE SPECIFIED TOLERANCE ON FLANGES IS ± 1/32

LENGTHS OF AN, NAS & MS AL ALY RIVETS SHORTER THAN 1 INCH ARE NOT SPECIFIED.

TOLERANCE ON LOFTED DELINEATIONS IS

DWG SIZE 34 X

PRINTING INFO ONLY

LDW280-52359

03703

NAS 9-1100

GRUMMAN AIRCRAFT ENGRG CORP., BETHPAGE, L.I., NEW YORK

SIZE	CODE IDENT NO		
J	26512	LDW280-52359	G

MODEL OR END ITEM | SCALE | | SHEET

LDW280-52359

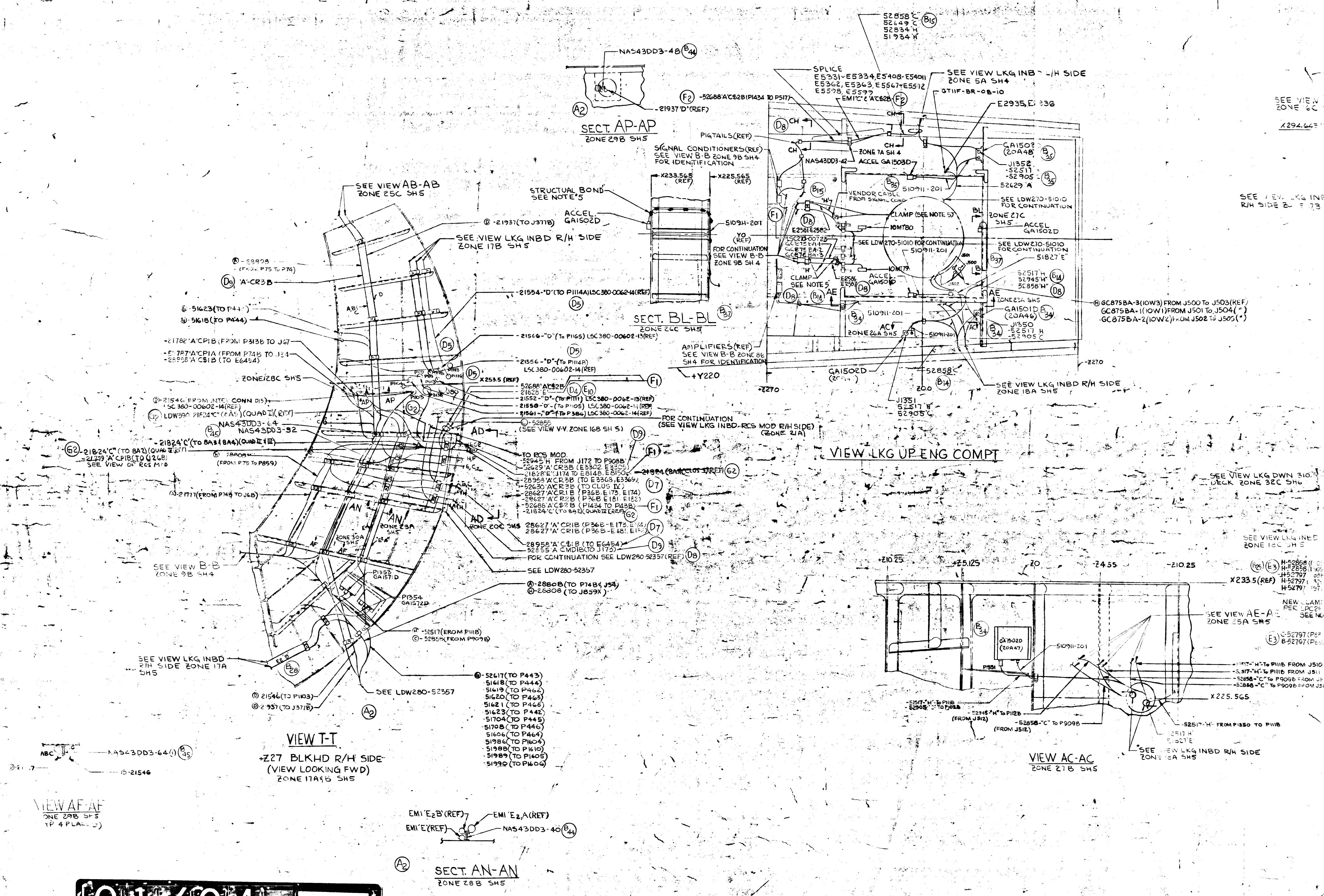
SECT. AP-AP
ZONE 29B SH5
NAS43DD3-48
-21937'D'(REF)
SECT. BL-BL
ZONE 26C SH5
VIEW LKG UP ENG COMPT
VIEW T-T
+Z27 BLKHD R/H SIDE
(VIEW LOOKING FWD)
ZONE 17A&B SH5
VIEW AF-AF
ZONE 29B SH5
TYP 4 PLACES
SECT. AN-AN
ZONE 28B SH5
EMI 'E2B'(REF)
EMI 'E2A'(REF)
EMI 'E'(REF)
NAS43DD3-40
VIEW AC-AC
ZONE 27B SH5
SEE VIEW AB-AB
ZONE 25C SH5
SEE VIEW LKG INBD R/H SIDE
ZONE 17B SH5
SEE VIEW B-B
ZONE 9B SH4
SEE LDW280-52357
FOR CONTINUATION SEE LDW280-52357(REF)
FOR CONTINUATION
(SEE VIEW LKG INBD-RCS MOD R/H SIDE)
(ZONE 21A)
SPLICE
E5331-E5334, E5408-E5411
E5362, E5363, E5567-E5572
E5598, E5599
SEE VIEW LKG INBD L/H SIDE
ZONE 5A SH4
SIGNAL CONDITIONERS(REF)
SEE VIEW B-B ZONE 9B SH4
FOR IDENTIFICATION
AMPLIFIERS(REF)
SEE VIEW B-B ZONE 8B
SH4 FOR IDENTIFICATION
STRUCTURAL BOND
SEE NOTE 5
ACCEL GA1502D
ACCEL GA1503D
GA1501D (20A46)
GA1503 (20A48)
510911-201
SEE VIEW LKG INBD R/H SIDE
ZONE 18A SH5
SEE VIEW AE-AE
ZONE 25A SH5
X233.5(REF)
X225.565
+Y220
+Z270
Z0
GC875BA-3(10W3) FROM J500 TO J503(REF)
GC875BA-1(10W1) FROM J501 TO J504(")
GC875BA-2(10W2) FROM J502 TO J505(")

01/04 NAS 9-1100

CODE IDENT NO.	DWG NO.	SHEET
26512	LDW 280-52359	

FRAME 2

25
24
23
22
21
SYS "A"
Ⓐ-21626
-52691
-28627
-52891 (FROM P701 TO P1410B)
-21192 (FROM P11B TO QUAD 3 8L9584LO)
Ⓒ-21951
-52951 'C' CB1A (TO P1410B)
D7
SEE VIEW Z-Z ZONE 6C SH5
Ⓔ-21874
-28607
-52951
X294.643 (REF)
-52951
FOR CONTINUATION SEE LDW390-52360
Ⓓ-21937
SEE VIEW LKG INBD R/H SIDE ZONE 17B SH5
SEE VIEW T-T ZONE 29A SH5
VIEW AB-AB
ZONE 11C SH5
SEE VIEW LKG INBD R/H SIDE ZONE 18C SH5
SEE LDW280-52340
SEE VIEW LKG INBD L/H ZONE 18B SH4
Ⓐ-21517 (FROM P111B)
Ⓒ-21905 (FROM P106B)
-21556
-21550
-21561
P1355
Ⓑ-21749 (TO P364C)
SEE VIEW LKG INBD R/H SHIELDING FRAME ZONE 23 SH5
FOR CONTINUATION SEE VIEW LKG INBD RCS MOD R/H SIDE ZONE 21A SH5
NAS43DD3-24
SEE VIEW OF MID-SECTION FOR CABLE CALLOUTS
X253.0 (REF)
GA1573D
(VENDOR SUPPLIED CABLE)
Z27 (REF)
LDW390-21809 (REF)
VIEW CT-CT
3 PLACES
(ZONE 22C SH5)
G1
SEE VIEW W-W ZONE 24C SH5
Ⓐ-21782 (FROM J67 TO J95)
Ⓐ-52936 (FROM P106B TO J95)
Ⓐ-52945 (FROM P112B TO J95)
Ⓐ-28940 (FROM P109B TO J95)
Ⓒ-21518 (FROM P143B TO J95)
Ⓒ-52936 (FROM DFR TO J95)
Ⓒ-21809 (FROM RJB TO J92)
Ⓒ-21648 (FROM J174 TO J95)
Ⓒ-52855 (FROM J173 TO J95)
Ⓒ-21690 (FROM P217B TO J95)
Ⓕ-21871 (FROM J870 TO J93)
Ⓓ-21871 (FROM J870 TO J95)
Ⓓ-28940 (FROM P109B TO J94)
Ⓒ-52882 (FROM P101B TO J95)
Ⓒ-51517
Ⓗ-51858
ZONE 23C SH5
VIEW W-W
(VIEW LKG AFT AT Z27)
ZONE 18A18B SH5
LDW390-21809 (REF)
SEE VIEW OF MID-SECTION FOR CABLE CALL OUT
SEE VIEW LKG INBD R/H SIDE ZONE 18A SH5
-21606 (TO P423B)
-21621 (TO P424B)
-21486 (TO P435B)
-21308 (TO P436B)
DKG LIGHT SWITCH "ON" (16DS12)
LDW280P11537 (REF)
GUILLOTINE SUPPLIED BY NORTH AMERICAN AVIATION (REF)
MOLDED ENVELOPE SEE NOTE 15
FOR CONTINUATION SEE VIEW BP-BP ZONE 36B SH6
Ⓚ-51708 (FROM P418 TO P446)
Ⓓ-21871 (FROM J870 TO J95)
Ⓓ-28940 (FROM P109B TO J94)
Ⓕ-21871 (FROM J870X TO J93)
Ⓐ-52936 (FROM P106B TO P1517)
ZONE 23B SH5
Ⓒ-52855 (FROM P909B TO P1517)
Ⓒ-28940 (FROM P109B TO 20K1 & 20K2)
Ⓒ-21809 (FROM RJB TO J92)
Ⓒ-21518 (FROM P143B TO J95)
Ⓒ-52882 TO J95)
D8
B1
AL
Ⓒ-21690 (FROM P217B TO J95)
Ⓐ-52945 (FROM P112B TO J95)
Ⓐ-52936 (FROM P106B TO J95)
Ⓐ-28940 (FROM P109B TO J95)
Ⓒ-21648 (FROM J174 TO J95)
Ⓒ-52855 (FROM J173 TO J95)
Ⓐ-21782 (FROM J67 TO J95)
SPLICE E4212 E4213
SEE VIEW LKG DWN 310.5 DECK ZONE 37C SH6
ANTENNA STRUT (REF)
20 (REF)
AM
ZONE 25A SH5
SEE VIEW LKG INBD R/H SIDE ZONE 18B SH5
-21025
X233.5 (REF)
-52263
GT11JBR08-10
(USED FOR S BAND STEERABLE)
-52797
-52853
21911 (REF)
NEW CLAMP PER LDP280-73 SEE NOTE 5
SEE VIEW AE-AE ZONE 25A SH5
Ⓔ-52797 (P838 TO P1143)
Ⓔ-52797 (P838 TO P1143)
SEE VIEW LKG INBD R/H SIDE ZONE 18C SH5
VIEW AM-AM
ZONE 24B SH5
21937 (REF)
SEE NOTE 5
28607 'A' P1517
STRUCTURAL BOND - (SEE NOTE 5)
ZONE 24 SH5
Ⓐ-52936 (FROM P106B)
Ⓒ-52858 (FROM P909B)
CREATE A 1½" ± ¼" SLACK BETWEEN CLAMPS FOR FINAL POSITIONING OF SLA/LM UMBILICAL MOLDED ENVELOPE WITHIN GUILLOTINE ATTACHED TO NORTH AMERICAN AVIATION SLA UMBILICAL SUPPORT ARM.
Ⓚ-51708 (FROM P418 TO P446)
P446 (STAGING NUT)
-52517-"H"-TO P111B FROM J510
-52517-"H"-TO P111B FROM J511
-52858-"C" TO P909B FROM J511
-52858-"C" TO P909B FROM J510
X225.565
P1535 (GB3127)
Ⓗ-51855 (FROM P908B)
ZONE BOX (REF)
FOR CONTINUATION SEE ZONE 31A SH6
X294.643 (REF)
+Y17.250 (REF)
VIEW Y-Y
ZONE 18C SH5
20K3 (REF)
20K2 (REF)
20K1 (REF)
EMI-A-52936 (TO J95)
-28940 (TO P109B)
EMI-C-52936 (TO J95)
-28940 (TO P109B)
EMI-A-52936 (TO P106B, J95)
EMI-C-52336 (TO J95)
-28940 (TO P109B)
EMI-A-52936 (TO P106B J95)
EMI-A-28940 (TO P109B)
E5326, E5313, E5314, E5324
E5310, E5311, E5312, E5315 THRU E5322, E5325, E5327, E5330, E5358, E5359
LDW280-1120 (REF)
F4
SC500 CLAMP - SEE NOTE 11.
VIEW AL-AL
ZONE 24B SH5
NAS43DD3-24
VIEW CL-CL
ZONE 25B SH5
J501 (REF)
J502 (REF)
J500 (REF)
SEE LDW270-51010
ACCEL GA1501D
-52517 'H' (FROM J510, J511)
-52945 'H' (FROM J512)
-52858 'H' (FROM P909B TO 10MT79)
X233.565 (REF)
51827 E
510911-201 (REF)
GA1501D (20A46)
X225.565 (REF)
52517 'H'
51905 'C'
SEE VIEW AC-AC ZONE 26A SH5
51827 'E'
SEE VIEW LKG UP ENG COMPT ZONE 27B SH5
+Z13.750 (REF)
52858 'C' (FROM J510, J511, J512)
VIEW AE-AE
(ROTATED 180° CCW)
ZONE 24C SH5
28627 'A' CR1B (FROM P368 TO E173, E174)
-21779 'A' CP1B (TO P313B)
-52629 AC R2B
-52688 'A'
-21828 'E'
D3
NAS43DD3-24
VIEW CF-CF
(TYP 2 PLACES)
ZONE 21A SH5
TEMP XDUCER (10MT43)
LOW LEVEL SENSO (10MT40)
Ⓖ-21906
Ⓒ-52649
Ⓑ-21916
SEE VIEW OF RCS MOD R/H ZONE 21A SH5
AFT
VIEW LKG UP OX TANK R/H SIDE (ROTATED 90° CW) ZONE 18A SH5
GT535U TAPE EVERY 3 INCHES TAPE TO EXTEND AROUND STRUT
-23L0 (REF)
28607 EMI 'A'
SPLICE E3854, E3855
GT535U TAPE (REF) TYP
S BAND ANTENNA (14E9)
P364C
-21749
Z0.0 (REF)
DOCKING (16DS2)
PRESS 8MT12
VIEW LKG INBD R/H SHIELDING FRAME
EMI 'H' -52675 (FROM AFT RACK TO 8A7)
SEE VIEW Z-Z ZONE 6C SH5
PROPELLANT QUANTITY MEASUREMENT DEVICE (REF) (8A7)
RCS OX
GT11JBR08-12
E4253, E4254
RCS MODULE 'E'
RCS FUEL
SPLICE E3604, E3605, E3608, E3609
He PRESS SUPPLY (SYSTEM "E")
-51398 (FROM P426A)
He TEMP TRANS 8RT4 (GR1122)
-52917 (FROM 5CEA*2 J887X)
MAIN OX S/O VALVE 8L17 (GR9610, GR3403)
-21906 (FROM ...)
-21426 (FROM ...)
P444
P442
P1573
28607
-28903 (FROM P1569A)
ZONE 22A SH5
FOR CONTINUATION SEE LDW280-52360
-52945 'H' (FROM J172)
-21824 'C' (TO 8A3) (QUAD II)
SEE VIEW LKG INBD R/H SHIELDING FRAME
LOOKING INBOARD

02X04

NAS 9-1100

LDW 280-52359 SHEET 5

FRAME 4

21
20
19
18
17
SEE VIEW LKG INBD L/H SIDE ZONE 18A SH5
SPLICE AREA
LOW LEVEL SENSOR (10MT40)
VIEW AD-AD
ZONE 28B SH5
To J174
To J173
To J172
SECT BS-BS
ZONE 18B SH5
FOR CONTINUATION SEE LDW280-52360
VENDOR SUPPLIED CABLE TO 7A9
FOR CONTINUATION SEE VIEW AM-AM ZONE 25A SH5
SEE VIEW LKG DWN X310.5 DECK ZONE 32C SH6
SEE VIEW LKG DWN X310.5 DECK ZONE 32C SH6
WATER TANK (REF)
SEE VIEW LKG DWN 310.5 DECK ZONE 33C SH6
SEE VIEW LKG DWN 310.5 DECK ZONE 32C SH6
ZONE 15 & 16C SH5
X294.643 (REF)
GT35U TAPE EVERY 3 INCHES. TAPE TO EXTEND AROUND STRUT
VIEW BT-BT
ZONE 17C SH5
DOCKING LIGHT (16DS24)
VIEW LKG INBD SHIELDING FRAME
PRESS He REG OUTPUT 8MT10 GR1202P
RCS FUEL
OX
RCS MODULE
He PRESS SUPPLY
HP He PRESS TRANS. 8MT9 GR1102P
SEE VIEW LKG INBD L/H SIDE ZONE 18B SH5
SEE VIEW CABLE CALLOUTS
VIEW AA-AA (TYP 5 PLACES) ZONE 17C SH5
FOR CONTINUATION SEE VIEW T-T
SEE VIEW T-T ZONE 29A SH5
ZONE 22A SH5 MAIN FUEL S/O VALVE
LDW280-52359-1 INSTL
SEE VIEW W-W ZONE 24C SH5
FOR CONTINUATION OF RCS MOD R/H S SEE ZONE 21 SH5
SEE VIEW T-T ZONE 29A SH5
FOR CONTINUATION SEE VIEW LKG INBD RCS MOD R/H
FOR CONTINUATION SEE LDW280-52357 (REF)
X253.50 (REF)
X233.50 (REF)
SEE VIEW LKG UP ENG COMPT ZONE 26B SH5
VIEW LKG INBD R/H SIDE
SEE VIEW W-W FOR STRUT ROUTING
SEE VIEW TANK RING ZONE 21B
10MT40-GP1218T TEMP. OX TANK
ZONE 29A SH5
J172
J173
J174
03/04
NAS 9-1100
280-52359
26512
LDW280-52359
SHEET 5
FRAME 6

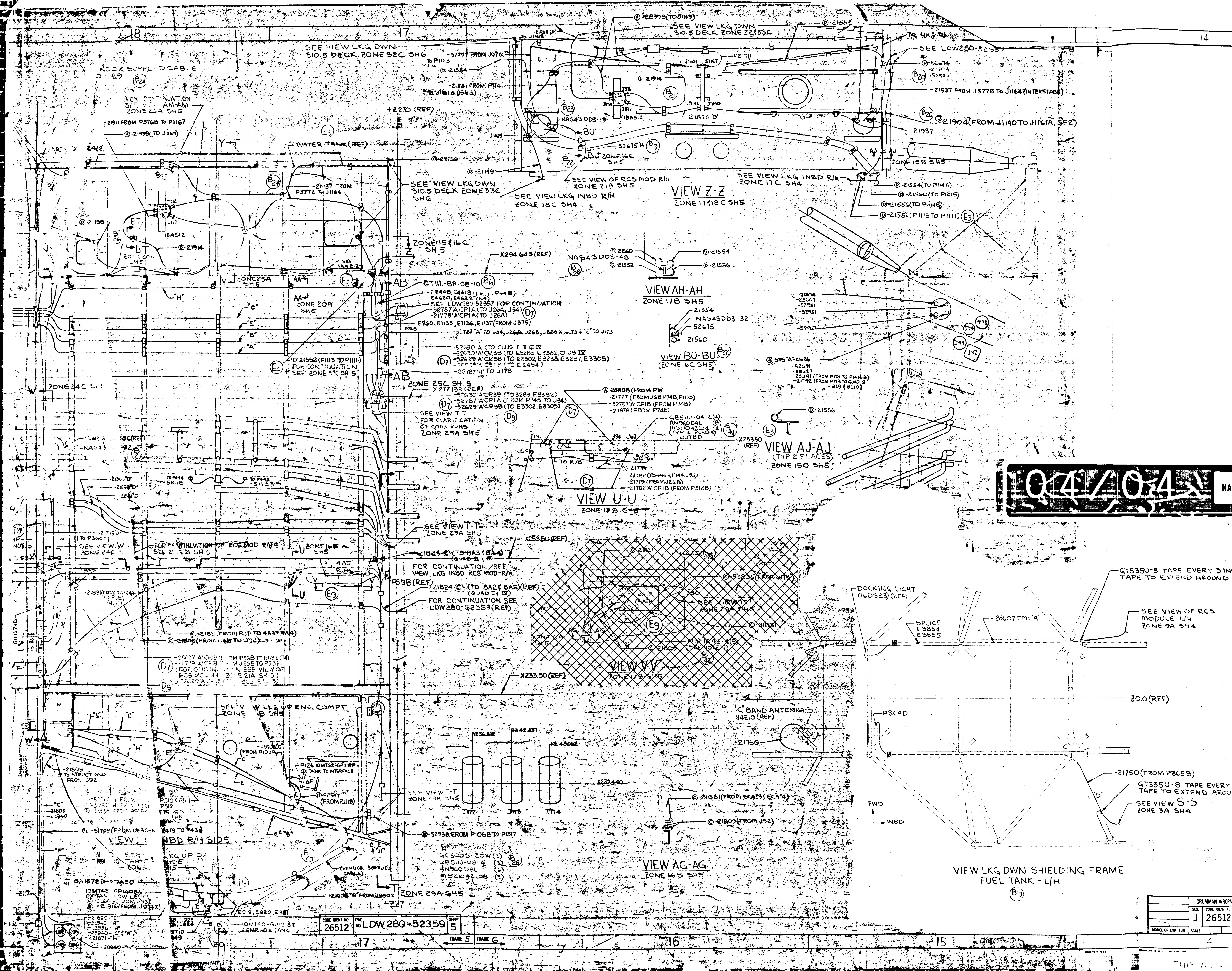

SEE VIEW LKG DWN 310.5 DECK ZONE 38C SH6
SEE VIEW LKG DWN 310.5 DECK ZONE 22&33C
SEE LDW280-52357
-21937 FROM J377B TO J1164 (INTERSTAGE)
-21904 (FROM J1140 TO J1161A, 18E2)
ZONE 15B SH5
WATER TANK (REF)
SEE VIEW LKG DWN 310.5 DECK ZONE 33C SH6
SEE VIEW OF RCS MOD R/H ZONE 21A SH5
SEE VIEW LKG INBD R/H ZONE 18C SH4
SEE VIEW LKG INBD R/H ZONE 17C SH4
VIEW Z-Z
ZONE 17&18C SH5
ZONE 15&16C SH5
X294.643 (REF)
NAS43DD3-48
VIEW AH-AH
ZONE 17B SH5
GT11L-BR-08-10
SEE LDW280-52357 FOR CONTINUATION
NAS43DD3-32
VIEW BU-BU
(ZONE 16C SH5)
ZONE 25C SH5
X277.138 (REF)
SEE VIEW T-T FOR CLARIFICATION OF COAX RUNS ZONE 29A SH5
VIEW AJ-AJ
(TYP 2 PLACES)
ZONE 15C SH5
VIEW U-U
ZONE 17B SH5
X253.50 (REF)
FOR CONTINUATION, SEE VIEW LKG INBD RCS MOD R/H
FOR CONTINUATION SEE LDW280-52357 (REF)
VIEW V-V
ZONE 17B SH5
X233.50 (REF)
SEE VIEW LKG UP ENG COMPT ZONE 18 SH5
X220.440
'C' BAND ANTENNA
SEE VIEW T-T ZONE 29A SH5
VIEW AG-AG
ZONE 16B SH5
ZONE 29A SH5
VIEW LKG INBD R/H SIDE
DOCKING LIGHT (16DS23) (REF)
GT535U-8 TAPE EVERY 3 INCHES TAPE TO EXTEND AROUND STRUT
SEE VIEW OF RCS MODULE L/H ZONE 9A SH4
SPLICE E3854 E3855
-28607 EM1 'A'
Z0.0 (REF)
P364D
-21750 (FROM P365B)
GT535U-8 TAPE EVERY 3 INC TAPE TO EXTEND AROUND S
SEE VIEW S-S ZONE 3A SH4
FWD
INBD
VIEW LKG DWN SHIELDING FRAME FUEL TANK - L/H
26512 LDW280-52359 5
FRAME 5
FRAME 6
18
17
16
15
14

NAS 9-1100

1Q4/04X

H-318

LDW280-52359

MANUFACTURING OPERATIONS

UNLESS OTHERWISE SPECIFIED NOTES CHECKED √ APPLY TO THIS DWG.

PART NUMBER AND ALL OTHER MARKINGS IN REGION MARKED ▭ USE BOTH SIDES IF NECESSARY.

FILLET AND INSIDE CORNER RADII TOLERANCES
.016R TO .062R ± .010
.063R TO .250R ± .015
OVER .250R + .030

DEPTH SHOWN FOR TAPPED HOLES IS FULL THDS. 2-3 IMP THDS. BEYOND PERMISSIBLE.

EXTERNAL THREAD LENGTH SHOWN INCLUDES 2 IMPERFECT THREADS MAX.

DO NOT CADMIUM PLATE & PAINT HOLES OR SURFACES MARKED WITH DOUBLE ASTERISK.

MISMATCH STEP OF ± .005 PERMISSIBLE DUE TO CHANGE OF CUTTERS AT INSIDE INTERSECTING SURFACES.

DIAMETERS MARKED MUST BE CONCENTRIC WITHIN FULL INDICATOR READING

HOLES MUST BE KEPT FREE OF CHROME PLATING SOLUTION.

ALL DIMENSIONS SHOWN TO BE MET AFTER CADMIUM PLATING. THICKNESS OF PLATE .0003 MIN. TO .0005 MAX. MIN. THICKNESS TO BE .0002 ON THREADED AREAS. NO ALLOWANCE FOR PLATING IN HOLES

125 SURFACE ROUGHNESS INCLUDING REAMED HOLES PER MIL-STD-10

200 FOR ALL DRILLED HOLES

REMOVE ALL BURRS. BREAK ALL EDGES .015-.031

INSPECTION INFORMATION MINIMUM PERMISSIBLE AVERAGE EDGE DISTANCE MARKED IS

SYMBOL √ DENOTES SURFACE TO BE MACHINED

UNLESS OTHERWISE SPECIFIED TOLERANCE ON FLANGES IS ± 1/32

LENGTHS OF AN, NAS & MS AL ALY RIVETS SHORTER THAN 1 INCH ARE NOT SPECIFIED.

TOLERANCE ON LOFTED DELINEATIONS IS

DWG SIZE 34 X

PRINTING INFO ONLY

FULL SIZE SHEET AREA (.86 X 1/2 SIZE SHEET AREA (1/4 OF FULL)

PRINT TRIM LINE

GRUMMAN AIRCRAFT ENGRG CORP., BETHPAGE, L. I., NEW YORK			
SIZE J	CODE IDENT NO. 26512	LDW280-52359	
LM MODEL OR END ITEM	SCALE		SHEET 5

THIS AN ORIGINAL DRAWIN

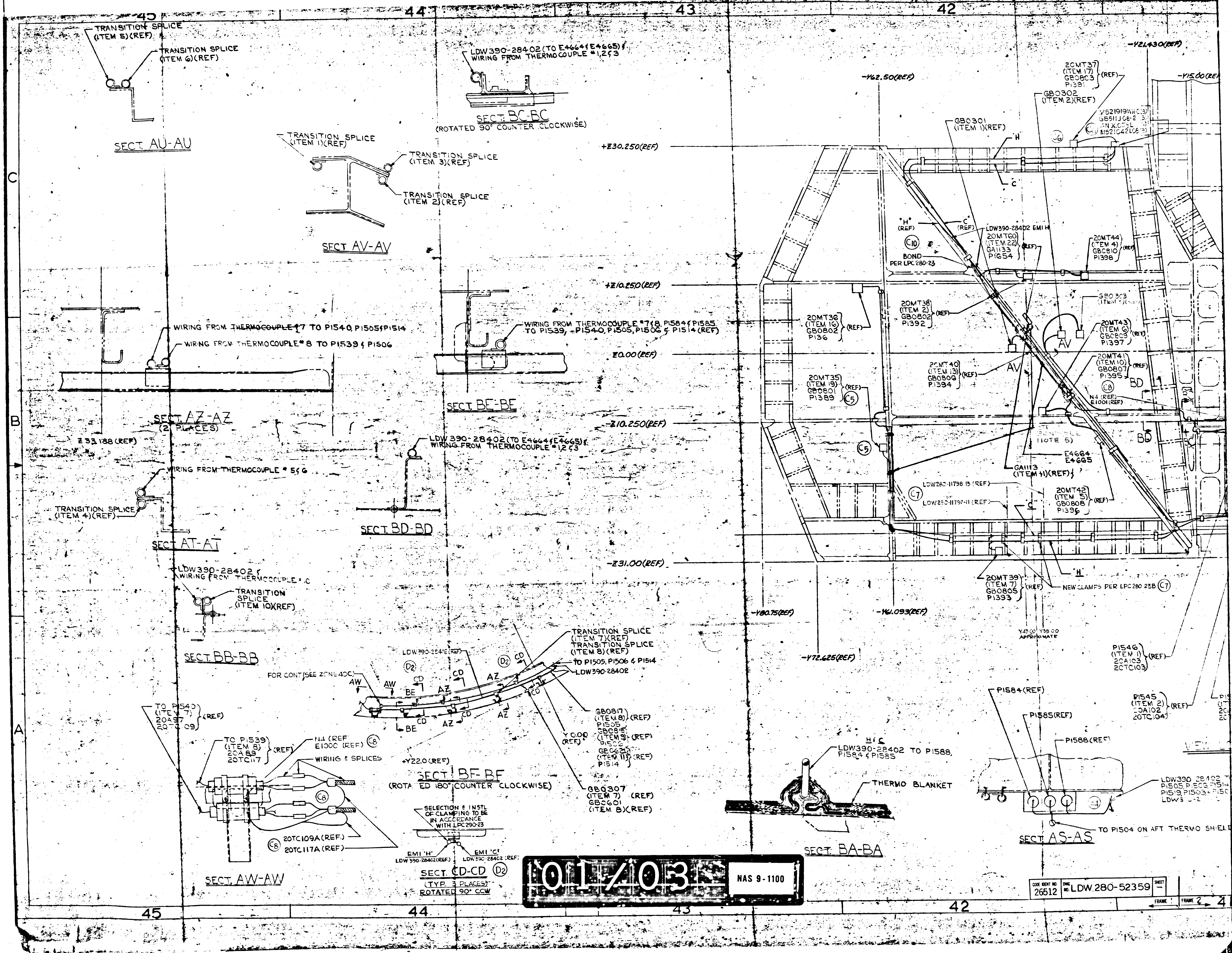

45
44
43
42
C
B
A
TRANSITION SPLICE (ITEM 5)(REF)
TRANSITION SPLICE (ITEM 6)(REF)
SECT. AU-AU
LDW390-28402 (TO E4664 & E4665) WIRING FROM THERMOCOUPLE # 1,2 & 3
SECT. BC-BC
(ROTATED 90° COUNTER CLOCKWISE)
TRANSITION SPLICE (ITEM 1)(REF)
TRANSITION SPLICE (ITEM 3)(REF)
TRANSITION SPLICE (ITEM 2)(REF)
SECT. AV-AV
+Z30.250(REF)
+Z10.250(REF)
Z0.00(REF)
-Z10.250(REF)
-Z31.00(REF)
-Y62.50(REF)
-Y24.30(REF)
-Y15.00(REF)
-Y80.75(REF)
-Y61.093(REF)
-Y72.625(REF)
WIRING FROM THERMOCOUPLE #7 TO P1540, P1505 & P1514
WIRING FROM THERMOCOUPLE #8 TO P1539 & P1506
SECT. AZ-AZ
(2 PLACES)
Z33.188 (REF)
WIRING FROM THERMOCOUPLE #7 & 8, P1584 & P1585 TO P1539, P1540, P1505, P1506 & P1514 (REF)
SECT. BE-BE
LDW390-28402 (TO E4664 & E4665) WIRING FROM THERMOCOUPLE # 1,2 & 3
SECT. BD-BD
WIRING FROM THERMOCOUPLE # 5 & 6
TRANSITION SPLICE (ITEM 4)(REF)
SECT. AT-AT
LDW390-28402 & WIRING FROM THERMOCOUPLE # C
TRANSITION SPLICE (ITEM 10)(REF)
SECT. BB-BB
20MT37 (ITEM 17) GB0803 P1391 (REF)
GB0302 (ITEM 2)(REF)
MS21919WHC(3) GB511J06-2 AN NOTE MS21042L06
GB0301 (ITEM 1)(REF)
"H"
"C"
"H" (REF)
"C" (REF)
LDW390-28402 EMI H
20MT60 (ITEM 22) GA1133 P1654 (REF)
C10
BOND PER LPC 280-23
20MT44 (ITEM 4) GB0810 P1398 (REF)
GB0303 (ITEM 1)
20MT38 (ITEM 2) GB0802 P1392 (REF)
20MT36 (ITEM 16) GB0802 P136 (REF)
20MT43 (ITEM 6) GB0809 P1397 (REF)
AV
20MT40 (ITEM 13) GB0800 P1394 (REF)
20MT41 (ITEM 10) GB0807 P1395 (REF)
BD
20MT35 (ITEM 19) GB0801 P1389 (REF)
C5
C8
N4 (REF) E1001 (REF)
(NOTE 5)
E4664 E4665
GA1113 (ITEM 41)(REF)
LDW280-11798-13 (REF)
LDW280-11797-11 (REF)
C7
20MT42 (ITEM 5) GB0808 P1396 (REF)
20MT39 (ITEM 7) GB0805 P1393 (REF)
NEW CLAMPS PER LPC 280-238 C7
Y43.00 Y38.00 APPROXIMATE
P1546 (ITEM 1) 20A103 20TC103 (REF)
P1545 (ITEM 2) 20A102 20TC104 (REF)
TRANSITION SPLICE (ITEM 7)(REF)
TRANSITION SPLICE (ITEM 8)(REF)
TO P1505, P1506 & P1514
LDW390-28402
LDW390-28412 (REF)
D2
CD
FOR CONT (SEE ZONE 40C)
AW
BE
AZ
GB0817 (ITEM 8) P1505 (REF)
GB0818 (ITEM 9) P1506 (REF)
GB0621 (ITEM 11) P1514 (REF)
Y0.00 (REF)
GB0307 (ITEM 7) (REF)
GB0601 (ITEM 8)(REF)
TO P1540 (ITEM 7) 20A97 20TC109 (REF)
TO P1539 (ITEM 8) 20A89 20TC117 (REF)
N4 (REF) E1000 (REF)
WIRING & SPLICES
20TC109A (REF)
20TC117A (REF)
SECT. AW-AW
+Y22.0 (REF)
SECT. BF-BF
(ROTATED 180° COUNTER CLOCKWISE)
SELECTION & INSTL OF CLAMPING TO BE IN ACCORDANCE WITH LPC290-23
EMI 'H' LDW390-28402 (REF)
EMI 'C' LDW390-28402 (REF)
SECT. CD-CD
(TYP. 3 PLACES) ROTATED 90° CCW
H C
LDW390-28402 TO P1588, P1584 & P1585
THERMO BLANKET
SECT. BA-BA
P1584 (REF)
P1585 (REF)
P1588 (REF)
LDW390-28402 TO P1505, P1506, P1514, P1519, P1563
SECT. AS-AS
TO P1504 ON AFT THERMO SHIELD
CODE IDENT NO 26512
DWG NO LDW 280-52359
SHEET
FRAME 2

01/03

NAS 9-1100

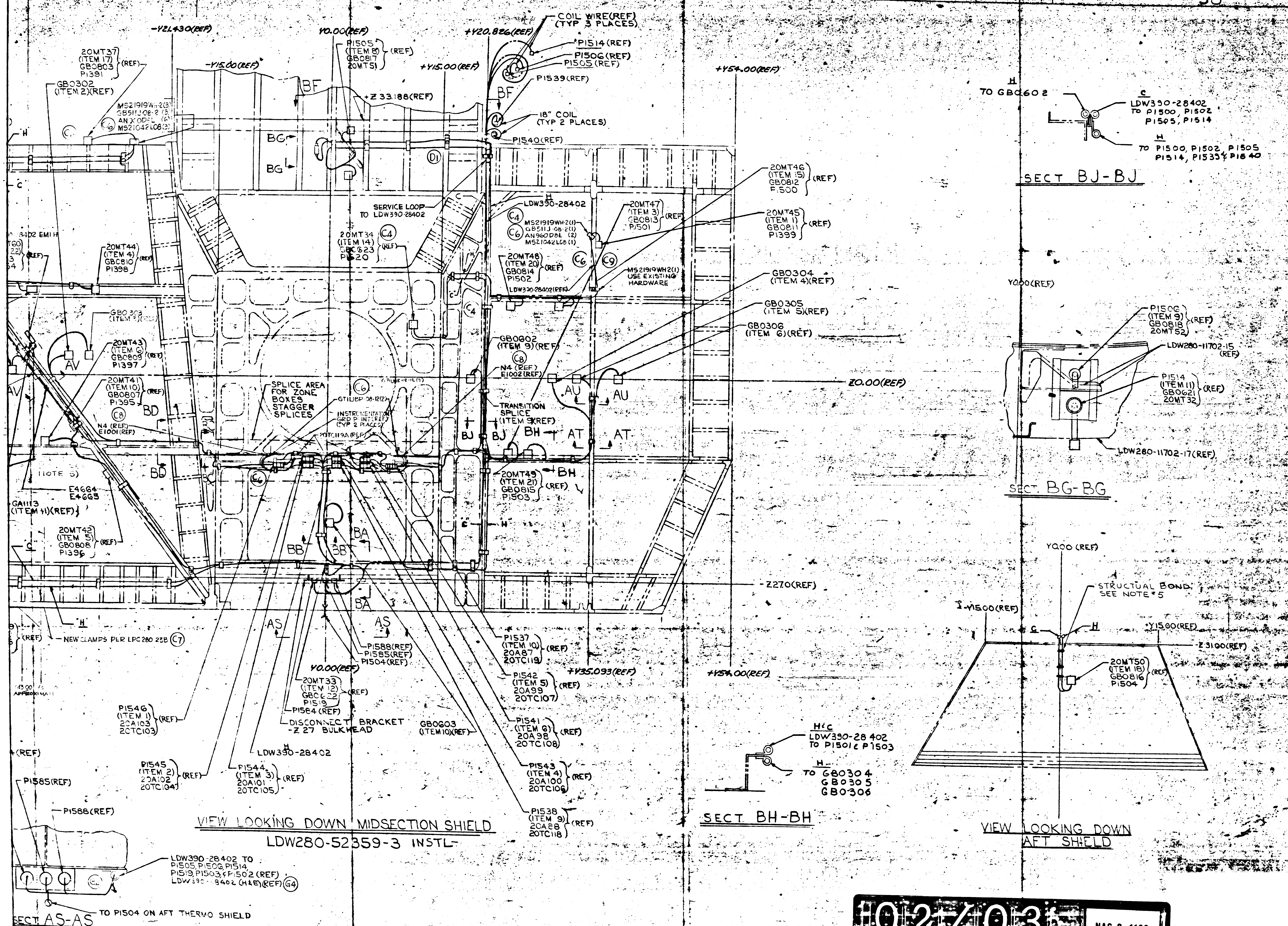

-Y21.430(REF)
Y0.00(REF)
+Y20.826(REF)
COIL WIRE(REF) (TYP 3 PLACES)
P1514(REF)
P1506(REF)
P1505(REF)
P1539(REF)
18" COIL (TYP 2 PLACES)
P1540(REF)
20MT37 (ITEM 17) GB0803 P1391 (REF)
GB0302 (ITEM 2)(REF)
-Y15.00(REF)
P1505 (ITEM 8) GB0817 20MT51 (REF)
+Y15.00(REF)
+Z 33.188(REF)
+Y54.00(REF)
BF
BG
D1
C4
C6
C9
MS21919WH2(3) GB511J-08-2 (3) AN960D8L (6) MS21042L08 (3)
SERVICE LOOP TO LDW390-28402
20MT34 (ITEM 14) GBC823 P1520 (REF)
LDW390-28402
MS21919WH2(1) GB511J-08-2(1) AN960D8L (2) MS21042L08(1)
20MT47 (ITEM 3) GB0813 P1501 (REF)
20MT46 (ITEM 15) GB0812 P1500 (REF)
20MT45 (ITEM 1) GB0811 P1399 (REF)
20MT48 (ITEM 20) GB0814 P1502 (REF)
MS21919WH2(1) USE EXISTING HARDWARE
LDW390-28402(REF)
GB0304 (ITEM 4)(REF)
GB0305 (ITEM 5)(REF)
GB0306 (ITEM 6)(REF)
20MT44 (ITEM 4) GBC810 P1398 (REF)
GB0303 (ITEM 3)(REF)
20MT43 (ITEM 6) GB0809 P1397 (REF)
20MT41 (ITEM 10) GB0807 P1395 (REF)
C8
N4 (REF) E1001(REF)
AV
BD
SPLICE AREA FOR ZONE BOXES STAGGER SPLICES
GT11JBP-08-12(2)
INSTRUMENTATION GRD PT INT(REF) (TYP 2 PLACES)
20TC119A(REF)
GB0602 (ITEM 9)(REF)
N4 (REF) E1002(REF)
TRANSITION SPLICE (ITEM 8)(REF)
AU
AT
BH
BJ
Z0.00(REF)
20MT49 (ITEM 21) GB0815 P1503 (REF)
(NOTE 5)
E4664 E4665
GA1113 (ITEM 41)(REF)
20MT42 (ITEM 5) GB0808 P1396 (REF)
BB
BA
Z270(REF)
AS
NEW CLAMPS PER LPC280-22B C7
P1588(REF)
P1585(REF)
P1504(REF)
P1537 (ITEM 10) 20A87 20TC119 (REF)
Y0.00(REF)
+Y35.093(REF)
+Y54.00(REF)
20MT33 (ITEM 12) GBC622 P1519 (REF)
P1584(REF)
P1542 (ITEM 5) 20A99 20TC107 (REF)
P1546 (ITEM 1) 20A103 20TC103 (REF)
DISCONNECT BRACKET -Z 27 BULKHEAD
GB0603 (ITEM 10)(REF)
P1541 (ITEM 6) 20A98 20TC108 (REF)
LDW390-28402
P1545 (ITEM 2) 20A102 20TC104 (REF)
P1544 (ITEM 3) 20A101 20TC105 (REF)
P1543 (ITEM 4) 20A100 20TC106 (REF)
P1538 (ITEM 9) 20A88 20TC118 (REF)
(REF)
P1585(REF)
P1588(REF)
LDW390-28402 TO P1505, P1506, P1514, P1519, P1503 & P1502 (REF) LDW390-28402 (H&E)(REF) G4
TO P1504 ON AFT THERMO SHIELD
TO GB0602
LDW390-28402 TO P1500, P1502, P1505, P1514
TO P1500, P1502, P1505 P1514, P1539 & P1540
Y0.00(REF)
P1506 (ITEM 9) GB0818 20MT52 (REF)
LDW280-11702-15 (REF)
P1514 (ITEM 11) GB0621 20MT32 (REF)
LDW280-11702-17(REF)
Y0.00 (REF)
STRUCTURAL BOND SEE NOTE 5
-Y15.00(REF)
+Y15.00(REF)
Z 31.00(REF)
20MT50 (ITEM 18) GB0816 P1504 (REF)
LDW390-28 402 TO P1501 & P1503
TO GB0304 GB0305 GB0306

VIEW LOOKING DOWN MIDSECTION SHIELD

LDW280-52359-3 INSTL

SECT BJ-BJ

SECT BG-BG

SECT BH-BH

VIEW LOOKING DOWN AFT SHIELD

SECT AS-AS

02/03

NAS 9-1100

CODE IDENT NO.	DWG NO.	SHEET
26512	LDW 280-52359	

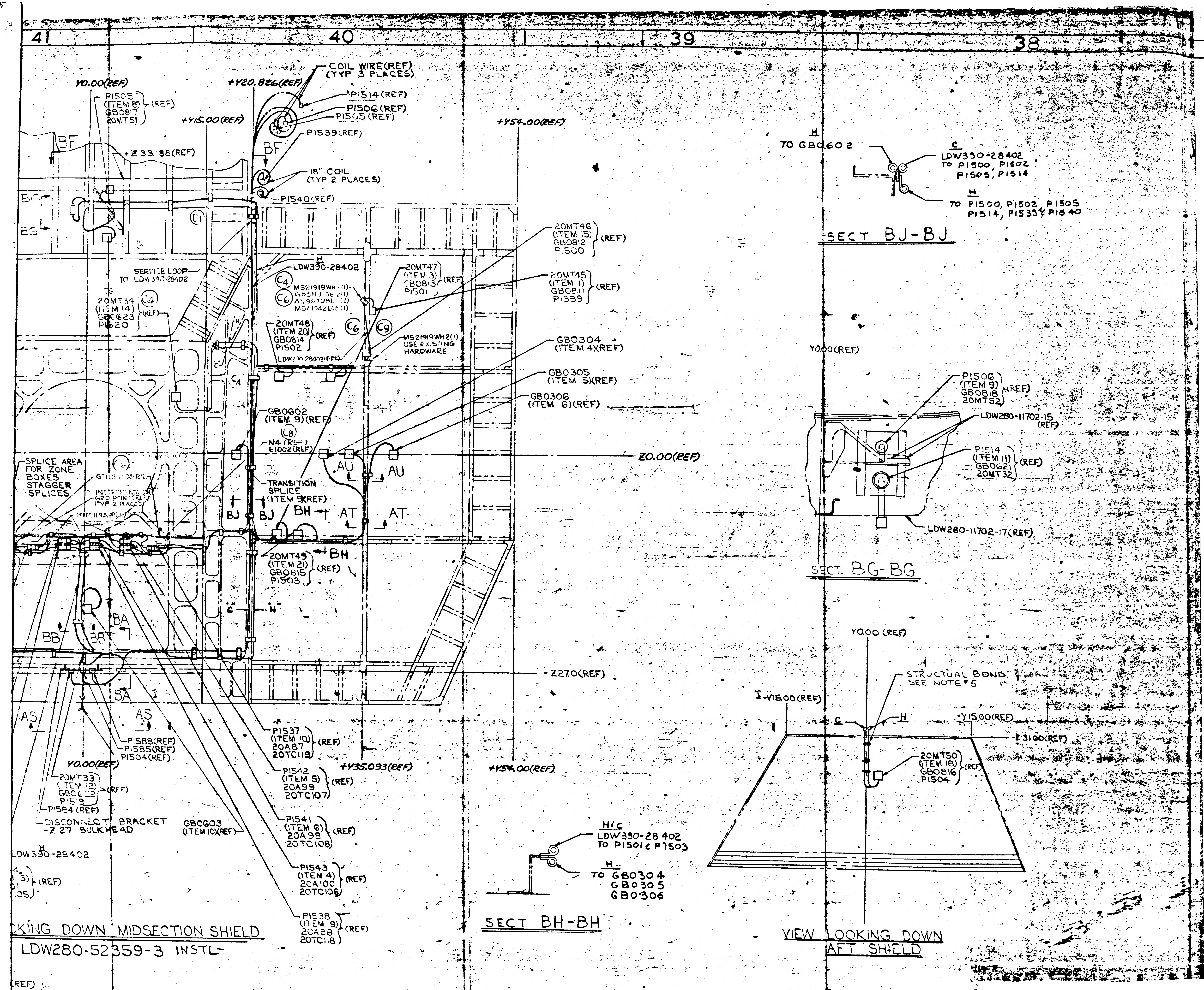
41
40
39
38
37
Y0.00(REF)
+Y20.826(REF)
COIL WIRE(REF) (TYP 3 PLACES)
P1514 (REF)
P1506 (REF)
P1505 (REF)
P1505 (ITEM 8) GB0817 20MT51 (REF)
+Y15.00(REF)
+Y54.00(REF)
BF
P1539 (REF)
+Z 33.88(REF)
18" COIL (TYP 2 PLACES)
P1540 (REF)
BC
BG
SERVICE LOOP TO LDW390-28402
LDW390-28402
20MT46 (ITEM 15) GB0812 P1500 (REF)
20MT47 (ITEM 3) GB0813 P1501 (REF)
20MT45 (ITEM 1) GB0811 P1399 (REF)
MS21919WH2(1) GB511-06 (1) AN960D8L (1) MS21042L06 (1)
20MT34 (ITEM 14) GB0823 P1520 (REF)
20MT48 (ITEM 20) GB0814 P1502 (REF)
MS21919WH2(1) USE EXISTING HARDWARE
LDW390-28402(REF)
GB0304 (ITEM 4)(REF)
GB0305 (ITEM 5)(REF)
GB0306 (ITEM 6)(REF)
GB0602 (ITEM 9)(REF)
N4 (REF) E1002 (REF)
Z0.00(REF)
SPLICE AREA FOR ZONE BOXES STAGGER SPLICES
INSTRUMENTATION GRD POINT(REF) (TYP 4 PLACES)
TRANSITION SPLICE (ITEM 3)(REF)
AU
AT
BJ
BH
20MT49 (ITEM 21) GB0815 P1503 (REF)
BA
BB
AS
Z27.0(REF)
P1537 (ITEM 10) 20A87 20TC119 (REF)
P1588(REF)
P1585(REF)
P1504(REF)
Y0.00(REF)
20MT33 (ITEM 2) GB0622 P1519 (REF)
P1564 (REF)
+Y35.093(REF)
+Y54.00(REF)
P1542 (ITEM 5) 20A99 20TC107 (REF)
DISCONNECT BRACKET -Z 27 BULKHEAD
GB0603 (ITEM 10)(REF)
P1541 (ITEM 6) 20A98 20TC108 (REF)
LDW390-28402
P1543 (ITEM 4) 20A100 20TC106 (REF)
P1538 (ITEM 9) 20A88 20TC118 (REF)
KING DOWN MIDSECTION SHIELD
LDW280-52359-3 INSTL
TO GB0602
LDW390-28402 TO P1500, P1502 P1505, P1514
TO P1500, P1502, P1505 P1514, P1533 & P1840
SECT BJ-BJ
Y0.00(REF)
P1506 (ITEM 9) GB0818 20MT52 (REF)
LDW280-11702-15 (REF)
P1514 (ITEM 11) GB0621 20MT32 (REF)
LDW280-11702-17(REF)
SECT. BG-BG
Y0.00 (REF)
STRUCTURAL BOND SEE NOTE 5
-Y15.00(REF)
+Y15.00(REF)
-Z31.00(REF)
20MT50 (ITEM 18) GB0816 P1504 (REF)
VIEW LOOKING DOWN AFT SHIELD
LDW390-28402 TO P1501 & P1503
TO GB0304 GB0305 GB0306
SECT BH-BH

MANUFACTURING OPERATIONS UNLESS OTHERWISE SPECIFIED NOTES CHECKED √ APPLY TO THIS DWG.	
PART NUMBER AND ALL OTHER MARKINGS IN REGION MARKED ▭ USE BOTH SIDES IF NECESSARY.	
FILLET AND INSIDE CORNER RADII TOLERANCES .016R TO .062R ± .010 .063R TO .250R ± .015 OVER .250R + .030	
DEPTH SHOWN FOR TAPPED HOLES IS FULL THDS. 2-3 IMP THDS. BEYOND PERMISSIBLE.	
EXTERNAL THREAD LENGTH SHOWN INCLUDES 2 IMPERFECT THREADS MAX.	
DO NOT CADMIUM PLATE & PAINT HOLES OR SURFACES MARKED WITH DOUBLE ASTERISK.	
MISMATCH STEP OF ± .005 PERMISSIBLE DUE TO CHANGE OF CUTTERS AT INSIDE INTERSECTING SURFACES.	
DIAMETERS MARKED MUST BE CONCENTRIC WITHIN FULL INDICATOR READING	
HOLES MUST BE KEPT FREE OF CHROME PLATING SOLUTION.	
ALL DIMENSIONS SHOWN TO BE MET AFTER CADMIUM PLATING. THICKNESS OF PLATE .0003 MIN. TO .0005 MAX. MIN. THICKNESS TO BE .0002 ON THREADED AREAS. NO ALLOWANCE FOR PLATING IN HOLES	
125 √ SURFACE ROUGHNESS INCLUDING REAMED HOLES PER MIL-STD-10	
200 √ FOR ALL DRILLED HOLES	
REMOVE ALL BURRS. BREAK ALL EDGES .015-.031	
INSPECTION INFORMATION MINIMUM PERMISSIBLE AVERAGE EDGE DISTANCE MARKED IS	
SYMBOL √ DENOTES SURFACE TO BE MACHINED	
UNLESS OTHERWISE SPECIFIED TOLERANCE ON FLANGES IS ± 1/32	
LENGTHS OF AN, NAS & MS AL ALY RIVETS SHORTER THAN 1 INCH ARE NOT SPECIFIED.	
TOLERANCE ON LOFTED DELINEATIONS IS	

DWG SIZE 34 X

PRINTING INFO ONLY
FULL SIZE SHEET AREA (36 X) = SQ. FT.
1/2 SIZE SHEET AREA (1/4 OF FULL) = SQ. FT.

PRINT TRIM LINE

C

B

A

LDW280-52359G

LDW280-52359G

03/03

NAS 9-1100

	GRUMMAN AIRCRAFT ENGRG CORP., BETHPAGE, L. I., NEW YORK			
	SIZE J	CODE IDENT NO. 26512	LDW280-52359	G
MODEL OR END ITEM	SCALE		SHEET	

37

ENG 73.7 6-64 OGILVIE PRESS, INC. BROOKLYN 17, N. Y. ULTRAVEL NO 4800

THIS IS AN ORIGINAL DRAWING

CL						-1	CODE IDENT	PART NO.	I&T	NOMENCLATURE OR DESCRIPTION	MATERIAL	GOVT SPEC	COML SPEC	STOCK SIZE	PROCESS SYM	FINISH NO	ZONE
QTY PER ASSEMBLY																	
A						AS REQD		73X	E	MARKING INK	ORANGE OR BLACK						
						AS REQD		EC-2216		ADHESIVE							
						AS REQD		EPON 919									
						AS REQD		MS21266-4N		GROMMET	STD. PART						
						AS REQD		MS21266-3N		GROMMET	STD. PART						
						AS REQD		MS21266-2N		GROMMET	STD. PART						
A						AS REQD		MS21266-1N	E	GROMMET	STD. PART						

CL = CLEANLINESS LEVEL

SYM OR NO	PROCESS OR FINISH	GRUMMAN SPEC OR MILITARY SPEC	SYM OR NO.	PROCESS OR FINISH	GRUMMAN SPEC OR MILITARY SPEC	SYM OR NO.	PROCESS OR FINISH	GRUMMAN SPEC OR MILITARY SPEC

I & T: IDENTIFICATION AND TRACEABILITY IN ACCORDANCE WITH : NONE

GRUMMAN AIRCRAFT ENGRG CORP, BETHPAGE, L. I., NEW YORK

SIZE	CODE IDENT NO.	
B	26512	LDW280-52359
SCALE NONE		SHEET 202

ENG 77.2 7-65

THIS IS AN ORIGINAL DRAWING

01

NAS 9-1100

REVISIONS

CHANGE LTR	ITEM NO.	SHEET NO.	ZONE	GRUMMAN INFO ONLY PRIOR TO EVENT	DET SPEC	CLASS I	CLASS II	ENGRG ORDER	DESCRIPTION	EFFECTIVITY	DISPOSITION OF EXISTING PARTS		CHANGED BY AND DATE	ENGRG APPD	GOVT APPD
											REWORK	SCRAP			
		1.00							ADDED SH 1.10, 1.11, 1.12, 1.13 & 3.01. LAST SECT LTR USED BE WAS BD SH 1.00 OF 18.00 WAS 1.00 OF 13.00						
A	1	2.00, 4.00	2A 3A					EO A1	TO-1 ADDED AN960D816 WASHER, VIEW BC-BC	LM-2 (32)	✓		W. CONROY 3-2-67		
	2	3.00						LEO280-314	ADDED NOTE 12		NOT	REQD			
	3	3.00						LEO280-377	ADDED NOTE 13						
	4	6.00	18B 19B					EO A4	ON-1 INSTL CORRECTED PICTURE TO SHOW -52675 STOWED WAS ROUTED TO J300		✓				
	5	4.00, 8.00 2.00, 2.01 2.02	32B 6 & 7A					EO A5	TO-1 ADDED LDW280-14136-15(2), DRILL #31 (8) HOLES GB511J-04-7(8) WAS -2 (8)						
	6	9.00	38B				✓	EO A6	REVERSED CALL-OUTS FOR XDUCERS 7MT-1 & 7MT-2 & SPLICES E261 THRU E264, E591 THRU E594.						
	7	6.00, 2.01 3.00	20C					EO A7	ON SH 6.00 ZONE 20C ADDED CALLOUTS (2), ON SH 2.01 ADDED GN511L-0420 NUT, ON SH 3.00 ADDED NOTES 14 & 15.						
	8	3.00						LEO280-456	ADDED NOTE 16						
	9	4.00	6B					EO A9	IN FLD-1 INSTL ADDED "LOCATE KEYWAY AS SHOWN"						
	10	3.01					✓	LEO280-468	ADDED NOTE 17						
B	1	9.00	38B 39B	2			✓	EO B1	CANCELED BY EO D4				A. P. STONE 12-12-67		
	2	3.01 4.00	6A 6C	1				EO B2	ADDED NOTE 19 ADDED SEE NOTE 19 TO F/D						
	3	11.00	51A 51B	1				EO B3	ON-1 INSTL ADDED LDW390-51602, LDW390-28402, E7141 & GT11JBR-08-10.						
	4	6.00 9.00 10.00 11.00	19 20C 40C 44A 47B 53B 55C	1				EO B4 LCD 1329	ON-1 INSTL - VIEW H-H, VIEW LKG FWD - Z27 BHD, VIEW AK-AK, SECT AJ-AJ, VIEW AM-AM, VIEW AN-AN & VIEW AL-AL, REROUTED POWER CABLES LDW390-21831 TO MAINTAIN SEPARATION OF SYSTEMS.						

CHG APPROVED	LTR	GROUP LDR	VDI			STRUCTURES	STRUCTURES				

FOR CONTINUATION OF REVISIONS SEE SHEET ________

GRUMMAN AIRCRAFT ENGRG CORP, BETHPAGE, L. I., NEW YORK

SIZE	CODE IDENT NO.		
B	26512	LDW280-52360	D

Ⓓ

SCALE NONE

SHEET 1.10

ENG 77.3 5-65

01

NAS 9-1100

REVISIONS

CHANGE LTR	ITEM NO.	SHEET NO.	ZONE	GRUMMAN INFO ONLY PRIOR TO EVENT	DET SPEC	CLASS I	CLASS II	ENGRG ORDER	DESCRIPTION	EFFECTIVITY	DISPOSITION OF EXISTING PARTS		CHANGED BY AND DATE	ENGRG APPD	GOVT APPD
											REWORK	SCRAP			
B	5	4.00 2.00	4C			✓		EO B5 LCD 1694	ON-1 ADDED E7905 & GT11J-BR-08-12	LM2 (32)	✓		A.P. STONE 12-12-67		
	6	2.02 4.00 5.00 6.00 7.00 9.00 10.00	 2C 11,12A 18,21B 24B 38A 46B				✓	EO B6 LCD 1306	ON-INSTL ADDED NAS43DD3-32 (2) ON-INSTL REVISED WIRE ROUTING TO MAINTAIN EMI SEPARATION IN SECTIONS H-H, AH-AH, AK-AK, AG-AG, AJ-AJ, AE-AE, AF-AF, VIEW LKG AFT AT AFT EQUIP. BAY & LKG AFT AT CLUSTER III.						
	7	2.02 11.00	51B 52B 53B 54B 55B 56B					EO B7 LCD 1306	ON-1 INSTL ADDED NAS43DD3-40 (1) ON-1 INSTL REVISED WIRE ROUTING TO MAINTAIN EMI SEPARATION IN SECTIONS AU-AU, AP-AP, AN-AN, AV-AV, AM-AM, AL-AL, AX-AX, AZ-AZ AND BA-BA.						
	8	9.00 10.00	37A 37B 40A 46B 47A					EO B8 LCD 1306	ROUTED REDUNDANT WIRING IN VIEW LKG FWD - Z27 BHD & SECTIONS AH-AH & AJ-AJ.						
	9	11.00	38A 51A 52A 53C					EO B9	ROUTED REDUNDANT WIRING IN VIEWS AN-AN, AU-AU AND AV-AV						
	10	2.00 2.01 4.00 5.00 9.00 10.00	7B 12A 13A 38A 39A 51A 53A 54B 50B					EO B10 LCD 1299 ⑥	ON-1 INSTL IN VIEW OF AFT EQUIP RACK LKG AFT ADDED: J1822 GB51IJ-04-2(4), AN960D4L(8) MS21042L04(4), ADDED TO EXISTING ROUTING: LDW390-52635 (10MT81, 10MT82, 8MT46, 8MT47) IN VIEW E-E, AFT EQUIP BAY ECS, LKG DOWN X238.50, ADDED TO EXISTING ROUTING: LDW 390-52635 (10MT81, 10MT82, 8MT46, 8MT47). IN VIEW AU-AU, LKG UP + X228.0, ADDED TO EXISTING ROUTING: LDW 390-52635 (10MT81, 10MT82, 8MT46, 8MT47). IN VIEW LKG FWD - Z27 BHD ADDED TO EXISTING ROUTING: LDW 390-52635 (8MT46) LDW 390-52635 (8MT47) ADDED E7998, E7999, E8000 (REF) E7995, E7997 (REF) 10MT81 (REF) 10MT82 (REF). IN VIEW J-J ADDED TO EXISTING ROUTING: LDW 390-52635 (8MT46, 8MT47, 10MT81, 10MT82) ADDED J1822 (REF). IN VIEW AM-AM ADDED						

CHG APPROVED	LTR	GROUP LDR	VDI			STRUCTURES	STRUCTURES				

FOR CONTINUATION OF REVISIONS SEE SHEET

GRUMMAN AIRCRAFT ENGRG CORP, BETHPAGE, L. I., NEW YORK

SIZE	CODE IDENT NO.		
B	26512	LDW280-52360	D
SCALE	NONE	SHEET	1.11

Ⓓ

ENG 77.3 5-66

01

NAS 9-1100

REVISIONS

CHANGE LTR	ITEM NO.	SHEET NO.	ZONE	GRUMMAN INFO ONLY PRIOR TO EVENT	DET SPEC	CLASS I	CLASS II	ENGRG ORDER	DESCRIPTION	EFFECTIVITY	DISPOSITION OF EXISTING PARTS		CHANGED BY AND DATE	ENGRG APPD	GOVT APPD
											REWORK	SCRAP			
B	10							EOB10 (CONT'D)	TO EXISTING ROUTING:(10MT82) LDW390-52635. IN VIEW AT-AT, ADDED TO EXISTING ROUTING: LDW390-52635(10MT81, 10MT82, 8MT46) LDW390-52635(10MT81, 10MT82).	LM2(32)	✓		A.P. STONE 12-12-67		
C	1	9.00 10.00 11.00	37A 47A 51A 53B 54A 54B 55A			✓		EOC1 LCD1594	ON-1 INSTL VIEW AV-AV, AN-AN, AM-AM ADDED LDW390-52936, P106B-J95. VIEW AK-AK, AJ-AJ, AF-AF, AE-AE ADDED LWD52882, P101B-J95 VIEW AR-AR, AS-AS, AT-AT, AU-AU ADDED LDW390-52945-P908B-J172, VIEW LKG FWD-Z27 BHD ADDED LDW390-52936-P106B-J95, LDW 390-52882 P101B, LDW390-52945, 908B-J172. LDW390-52882 WAS LDW390-21882.						
	2	9.00	38A				✓	EOC2	ON-1 INSTL ADDED LDW390-52945						
	3	5.00	11A 12A					EOC3 LCD1306	ON-1 INSTL DELETED LDW390-28958 (FROM J703-E3238) A-CR3B IN VIEW E-E.						
	4	11.00	52B					EOC4 LCD1306	DELETED CALLOUT A-CR3B (E3238-J703) LDW390-28958 IN VIEW AP-AP AND LDW390-28958 (J703-E3238) A-CR3B IN VIEW AU-AU.						
	5	5.00 6.00 9.00 10.00 11.00	9C, 11A 19, 20A 37C 40B 44B 47A 51B 52B					EOC5 LCD1752	ON-1 INSTL VIEW OF -Z27 BHD, ADDED P & J180 AND CABLE ASSEMBLIES LDW390-21650, -28607 & 52951 (EMI CODE B) CORRECTED CALLOUTS IN SECTION AJ-AJ & VIEW E-E, H-H, AE-AE, AF-AF, AG-AG, AH-AH, AK-AK, AP-AP & AU-AU AS REQD.						
	6	9.00	37B 39B					EOC6	ON-1 INSTL CHANGED INTERCONNECT VALVES DESIGNATION, +Y8L19 WAS 8L20 -Y8L20 WAS 8L19.						
	7	9.00 11.00 2.02	40A 51B 56A					EOC7 LCD1752	ON-1 INSTL REROUTED CABLE ASSEMBLIES IN VIEW -Z27 BHD LKG FWD VIEW AU-AU & ADDED VIEW BE-BE ADDED NAS43DD3-32 (1)						
	8	6.00 10.00 2.00, 2.01 3.00, 3.01	20C 46A 47B					EOC8 LCD1819	ON-1 INSTL DELETED GN511L-0420(2) MS21043-4(3) TYP (2) PLACES SEE NOTES 14 & 15, DETAIL BD. ON-1 INSTL DELETED AN960D416L(4), AN4-5A(2), GN511L-0420(4), MS21042L4(2) MS21043-4(6) NOTES 14, 15 & 17.						
	9	9.00 2.02	38C					EOC9	ON-1 INSTL ADDED CLAMP & NAS43DD3-32 (1) FOR RELOCATED XDUCER WIRE.						

CHG APPROVEL	LTR	GROUP LDR	VDI			STRUCTURES	STRUCTURES				

FOR CONTINUATION OF REVISIONS SEE SHEET

GRUMMAN AIRCRAFT ENGRG CORP, BETHPAGE, L. I., NEW YORK

SIZE	CODE IDENT NO.		
B	26512	LDW280-52360	D
SCALE NONE		SHEET 1.12	

D

ENG 77.3 5-66

01

NAS 9-1100

REVISIONS

CHANGE LTR	ITEM NO.	SHEET NO.	ZONE	GRUMMAN INFO ONLY PRIOR TO EVENT	DET SPEC	CLASS I	CLASS II	ENGRG ORDER	DESCRIPTION	EFFECTIVITY	DISPOSITION OF EXISTING PARTS		CHANGED BY AND DATE	ENGRG APPD	GOVT APPD
											REWORK	SCRAP			
C	10	9.00	37B 40B				✓	EO C10 LCD 1078	ON-1 INSTL ADDED GC500AA-1WD06 (2), GC500AA-1WD08 (2) GB511J-08-2(4), AN960D8L(8), MS21042L08(4)	LM2(32)	✓				
D	1	9.00	37B 40B					EO D1 LCD 1078	ON-1 INSTL GC500AA-1WD06 WAS GC500AA-1WD6 GC500AA-1WD08 WAS GC500AA-1WD8				A.P. STONE 12-12-67		
	2	2.00 2.01 4.00 5.00 6.00 9.00 10.00 11.00	3C 11,18B 37A 39A 45,68 46B 51A 54BC 55B 56B	E		✓		EO D2 LCD 1978	ON-1 INSTL DELETED GT11J-BR08-12(2). ADDED LDW390-52201-1(1), GB511J-08-5(1), AN960D8(2) & MS21042L08(1). ADDED WIRE RUNS LDW390-21828, LDW390-52687 & LDW390-52688 THRU VIEW E-E, H-H, AJ-AJ, AU-AU, AFT EQUIP BAY & -Z 27 BHD.						
	3	9.00 10.00	38A 47A 48B	R			✓	EO D3 LCD 1978	ON-1 INSTL RELOCATED LDW390-52688 IN VIEWS AJ-AJ, AE-AE & VIEW LKG FWD AT -Z 27 BHD.						
	4			E				EO D4 LCD 1299	CANCELS EO B1						
	5	9.00 11.00	39B 56B					LCD 1078	REF EO C10-DELETED SECT AW-AW						
	6	2.00, 2.01 9.00	40B		✓				ADDED HDWR CALLOUT FOR P1658(2) P1659(2)						
	7	3.00							REF NOTE 4 LSP-14-102 WAS LSP-14-201 (DWG CORR)		NOT	REQD			
	8	3.01					✓	LCD 1078	ADDED NOTE 18.						
	9	2.00, 2.01 2.02							DELETED MS21042A08, MS21266-1N, -2N, -3N & -4N, MS20995F32 GB511J-08-20, GB511J-08-24 AN960D10L (DWG CORR)						
	10	9.00 2.00	38A 39B		✓			A-B-C-D	ADDED - LDW360-52312-1 & -2						

CHG APPROVED	LTR	GROUP LDR	VDI			STRUCTURES	STRUCTURES				
	D	B.J.W. 12/13/67	12/13/67								

FOR CONTINUATION OF REVISIONS SEE SHEET ______

ENG 77.3 5-65

GRUMMAN AIRCRAFT ENGRG CORP, BETHPAGE, L. I., NEW YORK

SIZE	CODE IDENT NO.		
B	26512	LDW280-52360	D
SCALE NONE		SHEET 1.13	

01

NAS 9-1100

QTY PER ASSEMBLY CL						-1	CODE IDENT	PART NO.	I&T	NOMENCLATURE OR DESCRIPTION	MATERIAL	GOVT SPEC	COML SPEC	STOCK SIZE	PROCESS SYM	FINISH NO.	ZONE
A						AS REQD		MS21919WDH 32	E	CLAMP	STD. PART						
								28	E								
								24	E								
								20	E								
								18	E								
								17	E								
								16	E								
								15	E								
								14	E								
								13	E								
								12	E								
								11	E								
								10	E								
								9	E								
								8	E								
								7	E								
								6	E								
								5	E								
								MS21919WDH4	E								
								MS21919DH3	E								
						AS REQD		MS21919DH2	E	CLAMP							
						2		GC500AA-1WD08	E	CLAMP							
						2		GC500AA-1WD06	E	CLAMP							
						236		MS21042L04	E	NUT							
A						5		MS21042L08	E	NUT	STD. PART						

SYM OR NO.	PROCESS OR FINISH	GRUMMAN SPEC OR MILITARY SPEC	SYM OR NO.	PROCESS OR FINISH	GRUMMAN SPEC OR MILITARY SPEC	SYM OR NO.	PROCESS OR FINISH	GRUMMAN SPEC OR MILITARY SPEC

I & T: IDENTIFICATION AND TRACEABILITY IN ACCORDANCE WITH : NONE

GRUMMAN AIRCRAFT ENGRG CORP, BETHPAGE, L. I., NEW YORK

SIZE	CODE IDENT NO.		
B	26512	LDW280-52360	D

SCALE NONE

SHEET 2.01

THIS IS AN ORIG. DWG.

ENG 77.2 7-65

01

NAS 9-1100

CL	QTY PER ASSEMBLY					-1	CODE IDENT	PART NO.	I&T	NOMENCLATURE OR DESCRIPTION	MATERIAL	GOVT SPEC	COML SPEC	STOCK SIZE	PROCESS SYM	FINISH NO.	ZONE
A						AS REQ'D.		73X	E	MARKING INK	ORANGE OR BLK.						
						SEE NOTE 8		NAS43DD3-40	E	SPACER	STD. PART						
								-32	E								
								-24	E								
						SEE NOTE 8		NAS43DD3-16	E	SPACER	STD. PART						
A						28		MS17821-1-9	E	CLAMP, STRAP	STD. PART						

SYM OR NO.	PROCESS OR FINISH	GRUMMAN SPEC OR MILITARY SPEC	SYM OR NO.	PROCESS OR FINISH	GRUMMAN SPEC OR MILITARY SPEC	SYM OR NO.	PROCESS OR FINISH	GRUMMAN SPEC OR MILITARY SPEC

I & T: IDENTIFICATION AND TRACEABILITY IN ACCORDANCE WITH : NONE

GRUMMAN AIRCRAFT ENGRG CORP, BETHPAGE, L. I., NEW YORK

SIZE	CODE IDENT NO.		
B	26512	LDW280-52360	D

SCALE NONE

SHEET 2.02

FMG 77 2 7-65

THIS IS AN ORIG. DWG.

01

NAS 9-1100

NOTES:

1. COMMERCIAL PART SEE SPEC. CONTROL DWG. BEFORE ORDERING.
2. ALL CONNECTOR NUMBERS SHALL BE PLACED ON STRUCTURE ADJACENT TO THE RESPECTIVE CONNECTOR BY RUBBER STAMP USING 73X ORANGE OR BLACK MARKING INK.
3. PRIOR TO ASSEMBLY OF GT11J TERMINAL INSTALLATION, CLEAN STRUCTURE IN ACCORDANCE WITH LSP390-001.
4. AFTER ASSEMBLY OF THE GT11J TERMINAL INSTALLATION AND THE ADDITION OF ALL TERMINAL LUGS REQUIRED, BRUSH COAT THE ENTIRE ASSEMBLY WITH EPON 919. MIX EPON 919 PER LSP14-14.102 ALL SURFACES TO BE CLEANED PER LSP14-7011 PRIOR TO COATING.
5. SPECIFICATION LSP390-002 SHALL BE USED IN CONJUNCTION WITH THIS INSTALLATION.
6. MS21266-1N, -2N, -3N OR -4N SHALL BE BONDED TO STRUCTURE AS REQUIRED TO PREVENT CHAFFING OF WIRE BUNDLES. BOND PER LSP14-22500.
7. STAGGER ALL SPLICES FOR CLUSTERS IN THIS AREA.
8. QUANTITIES TO BE ADDED AT A LATER DATE.
9. ALL LDW390 CABLE ASSEMBELY NUMBERS ARE FOR REFERENCE ONLY, EXCEPT LDW390-52014.
10. ALL COAX CONNECTORS SHALL BE LOCKWIRED, WHERE LOCKWIRE HOLES EXIST, IN ACCORDANCE WITH MS33540, USING MS20995F32 LOCKWIRE. WHERE NO LOCKWIRE HOLES EXIST, USE LOCKTITE ON THREADS PRIOR TO MATING OF PLUG TO CONNECTOR.
11. GROUND ALL N3 & N4 GROUNDS TO THE NEAREST GROUND STUD FROM THE CONNECTOR.
12. SUBSTITUTION OF NAS1132V, AN525-832R OR AN525-832 BOLTS FOR THE GB511J-08 BOLT IS PERMISSIBLE.
13. MS21919WDH CLAMPS & GC500S CLAMPS ARE INTERCHANGEABLE & EITHER MAY BE USED IN THIS INSTL.
14. ~~TORQUE GN511L-0420 NUTS ON BATTERIES #5 & #6 TO 20±5 INCH POUNDS.~~
15. ~~TORQUE MS21043-4 NUTS ON ECA #3 AND #4 (TERMINALS 3, 4 & 5)~~ TO 60±5 INCH POUNDS.
16. REMOVE DUST CAP FROM J882 GSE CONNECTOR ON P.C.M. REPLACE SCREW & TORQUE TO 6.5 INCH POUNDS

FOR CONTINUATION OF NOTES SEE SH 3.01

GRUMMAN AIRCRAFT ENGRG CORP., BETHPAGE, L. I., NEW YORK

SIZE	CODE IDENT NO.		
B	26512	LDW280-52360	D
SCALE ~			SHEET 3.00

THIS IS AN ORIG. DWG

01

NAS 9-1100

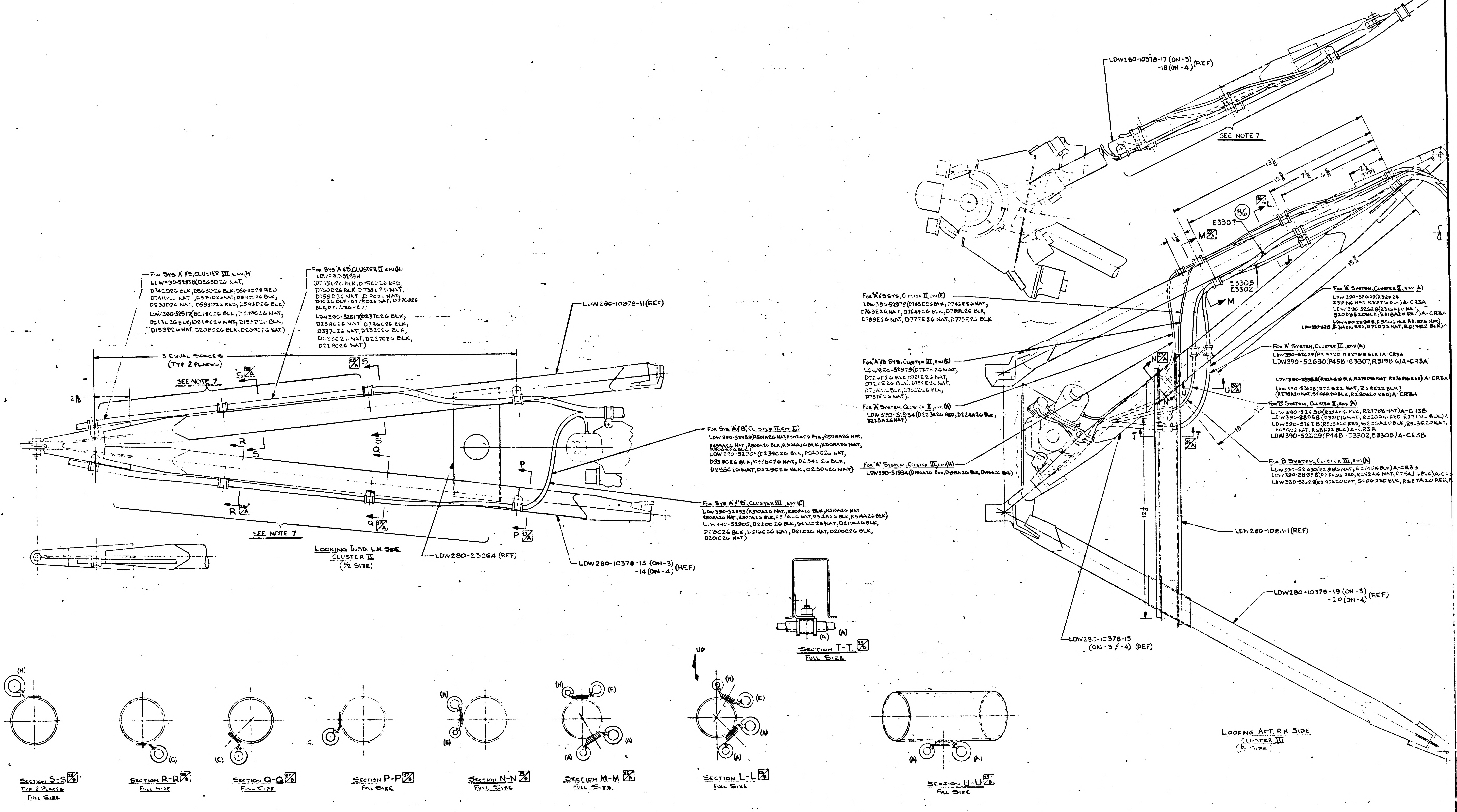
For Sys 'A' & B, Cluster III emi (H)
LDW390-52858(D565D26 NAT, D742D26 BLK, D563D26 BLK, D564D26 RED, D741D26 NAT, D581D26 NAT, D590D26 BLK, D593D26 NAT, D595D26 RED, D594D26 BLK)
LDW390-52517(D218C26 BLK, D219C26 NAT, D213C26 BLK, D214C26 NAT, D198D26 BLK, D199D26 NAT, D208C26 BLK, D209C26 NAT)
For Sys A & B, Cluster II emi (H)
LDW390-52858
(D755D26 BLK, D756D26 RED, D760D26 BLK, D754D26 NAT, D759D26 NAT, D 9C26 NAT, D7C26 BLK, D775D26 NAT, D776D26 BLK, D777D26 RED)
LDW390-52517(D237C26 BLK, D238C26 NAT, D336C26 BLK, D337C26 NAT, D232C26 BLK, D233C26 NAT, D227C26 BLK, D228C26 NAT)
LDW280-10378-11 (REF)
3 Equal Spaces (Typ 2 Places)
2½
See Note 7
S 28/A
S
R
Q
P
R 28/A
Q 28/A
P 27/A
See Note 7
Looking Inbd L.H. Side
Cluster II
(½ Size)
LDW280-23264 (REF)
LDW280-10378-13 (ON-3)
-14 (ON-4) (REF)
For Sys 'A' & 'B', Cluster II, emi (C)
LDW390-52933(R501A26 NAT, R502A26 BLK, R503A26 NAT, R499A26 NAT, R500A26 BLK, R504A26 BLK, R505A26 NAT, R506A26 BLK)
LDW390-52905(D239C26 BLK, D240C26 NAT, D338C26 BLK, D336C26 NAT, D234C26 BLK, D235C26 NAT, D229C26 BLK, D230C26 NAT)
For Sys A & 'B', Cluster III, emi (C)
LDW390-52933(R510A26 NAT, R509A26 BLK, R513A26 NAT R508A26 NAT, R507A26 BLK, R511A26 NAT, R512A26 BLK, R514A26 BLK)
LDW390-52905(D220C26 BLK, D221C26 NAT, D210C26 BLK, D215C26 BLK, D216C26 NAT, D211C26 NAT, D200C26 BLK, D201C26 NAT)
LDW280-10378-17 (ON-3)
-18 (ON-4) (REF)
See Note 7
13⅛
12⅝
7½
6⅝
2¼ (TYP)
B6
E3307
L 26/A
M 27/A
1¼
E3305
E3302
M
L
15¾
For 'A' & B Sys, Cluster II, emi (E)
LDW390-52979(D745E26 BLK, D746E26 NAT, D763E26 NAT, D764E26 BLK, D788E26 BLK, D789E26 NAT, D772E26 NAT, D773E26 BLK
For 'A' & B Sys. Cluster III, emi (E)
LDW390-52979(D727E26 NAT, D726F26 BLK, D721E26 NAT, D722E26 BLK, D732E26 NAT, D731E26 BLK, D736E26 BLK, D737E26 NAT).
For 'A' System, Cluster II, emi (H)
LDW390-51934(D223A26 RED, D224A26 BLK, D225A26 NAT)
For 'A' System, Cluster III, emi (H)
LDW390-51934(D194A26 RED, D195A26 BLK, D196A26 NAT)
For 'A' System, Cluster II, emi (A)
LDW390-52629(R312D20, R312B16 NAT, R315B16 BLK) A-CR3A
LDW390-52628(R316A20 NAT, S206BE20 BLK, R318A20 RED) A-CR3A
LDW390-28958(R315C16 BLK, R313D16 NAT)
LDW390-628, R314D16 RED, R72R22 NAT, R65M22 BLK) A
For 'A' System, Cluster III, emi (A)
LDW390-52629(P319F20 R327B18 BLK) A-CR3A
LDW390-52630(P45B-E3307, R319B16) A-CR3A
LDW390-28958(R322B16 BLK, R275D16 NAT R276D16 RED) A-CR3A
LDW390-52628(R72S22 NAT, R69K22 BLK)
(R278A20 NAT, S206R20 BLK, R280A20 RED) A-CR3A
For 'B' System, Cluster II, emi (A)
LDW390-52630(R274B16 BLK, R277B16 NAT) A-CR3B
LDW390-28958 (R321D16 NAT, R320D16 RED, R271G16 BLK) A
LDW390-52628(R325A20 RED, S205A20 BLK, R323Q20 NAT, R69Q22 NAT, R65H22 BLK) A-CR3B
LDW390-52629(P44B-E3302, E3305) A-CR3B
For B System, Cluster III, emi (A)
LDW390-52630(R281B16 NAT, R284B16 BLK) A-CR3B
LDW390-28958(R283A16 RED, R282A16 NAT, R284J16 BLK) A-CR
LDW390-52628(R295A20 NAT, S206Q20 BLK, R287A20 RED, R
N 27/A
N
U
U 26/A
T
T 26/A
18
12¼
LDW280-10811-1 (REF)
LDW280-10378-15
(ON-3 & -4) (REF)
LDW280-10378-19 (ON-3)
-20 (ON-4) (REF)
Looking Aft R.H. Side
Cluster III
(F Size)
(A)
(A)
Section T-T 25/B
Full Size
UP
(H)
(C)
(C)
(H)
(E)
(H)
(E)
(A)
(A)
(H)
(E)
(A)
(A)
(A)
(A)
Section S-S 28/B
Typ 2 Places
Full Size
Section R-R 28/B
Full Size
Section Q-Q 27/B
Full Size
Section P-P 27/B
Full Size
Section N-N 25/B
Full Size
Section M-M 25/B
Full Size
Section L-L 25/B
Full Size
Section U-U 25/B
Full Size
28
27
26
25
C
B
A

01/02

NAS 9-1100

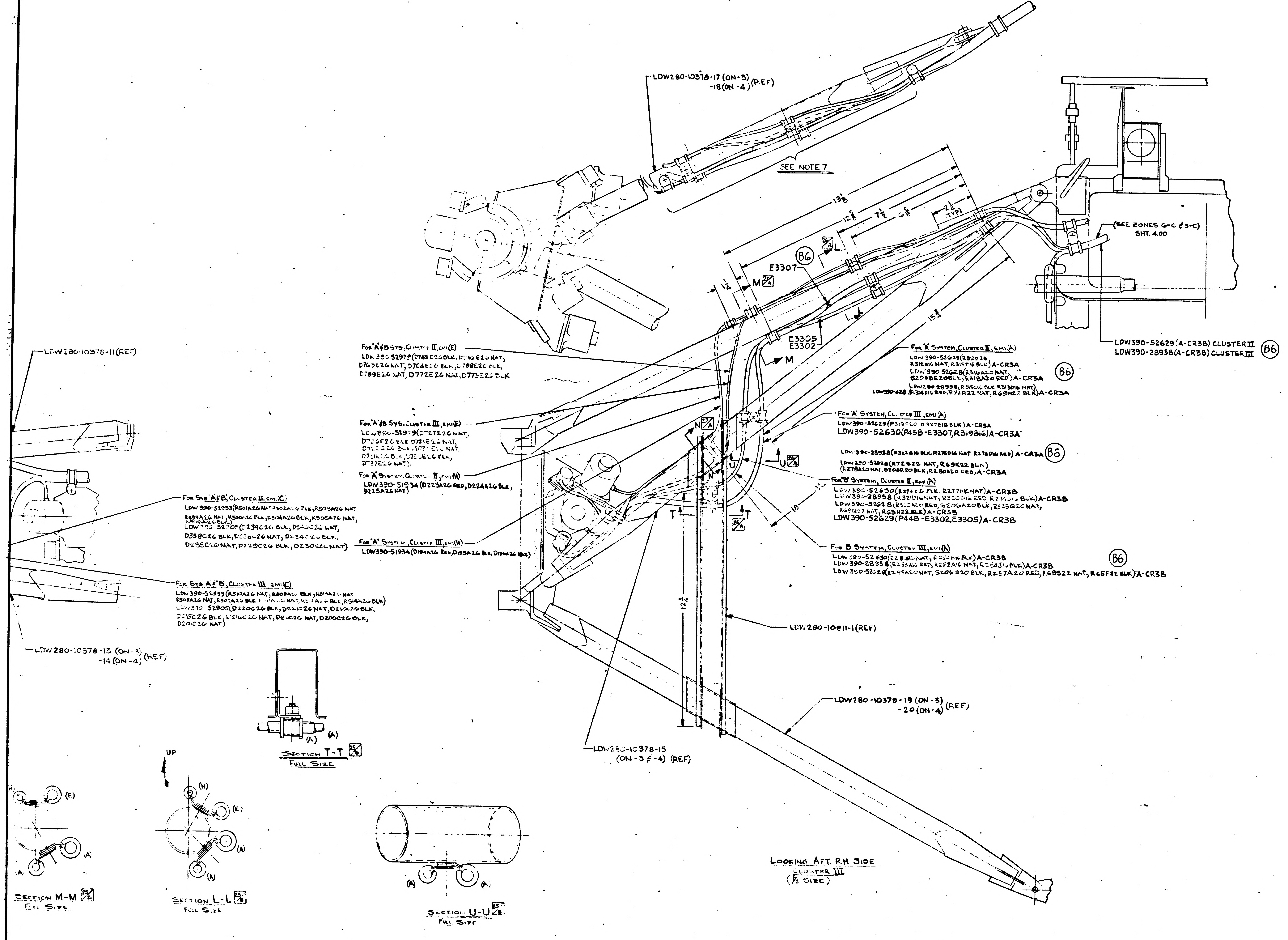
LDW280-10378-17 (ON-3)
-18 (ON-4) (REF)
SEE NOTE 7
13 1/8
12 5/8
7 1/2
6 5/8
2 1/4 (TYP)
1 1/4
15 3/4
18
12 1/4
(SEE ZONES 6-C & 3-C)
SHT. 4.00
B6
E3307
M 27/A
L 26/A
L
E3305
E3302
M
N 27/A
N
U
U 26/A
T
T 26/A
LDW390-52629 (A-CR3B) CLUSTER II
LDW390-28958 (A-CR3B) CLUSTER III
B6
LDW280-10378-11 (REF)
For "A" & "B" Sys, Cluster II, emi (E)
LDW390-52979 (D745E26 BLK, D746E26 NAT, D763E26 NAT, D764E26 BLK, D788E26 BLK, D789E26 NAT, D772E26 NAT, D773E26 BLK
For "A" System, Cluster II, emi (A)
LDW390-52629 (R312D28, R312B16 NAT, R315B16 BLK) A-CR3A
LDW390-52628 (R316A20 NAT, S206BE20 BLK, R318A20 RED) A-CR3A
B6
LDW390-28958 (R315C16 BLK, R313D16 NAT)
LDW390-628 (R314D16 RED, R72R22 NAT, R69M22 BLK) A-CR3A
For "A" & "B" Sys. Cluster III, emi (E)
LDW390-52979 (D727E26 NAT, D726F26 BLK D721E26 NAT, D722E26 BLK, D73?E26 NAT, D751E26 BLK, D73?E26 BLK, D737E26 NAT).
For "A" System, Cluster III, emi (A)
LDW390-52629 (P319F20 R327B16 BLK) A-CR3A
LDW390-52630 (P45B-E3307, R319B16) A-CR3A
LDW390-28958 (R322B16 BLK, R275D16 NAT, R276D16 RED) A-CR3A
B6
LDW390-52628 (R72S22 NAT, R69K22 BLK)
(R278A20 NAT, S206R20 BLK, R280A20 RED) A-CR3A
For "A" System, Cluster II, emi (H)
LDW390-51934 (D223A26 RED, D224A26 BLK, D225A26 NAT)
For "B" System, Cluster II, emi (A)
LDW390-52630 (R274C16 BLK, R277B16 NAT) A-CR3B
LDW390-28958 (R321D16 NAT, R320D16 RED, R274?16 BLK) A-CR3B
LDW390-52628 (R323A20 RED, S206A20 BLK, R325Q20 NAT, R69Q22 NAT, R65H22 BLK) A-CR3B
LDW390-52629 (P44B-E3302, E3305) A-CR3B
For Sys "A" & "B", Cluster II, emi (C)
LDW390-52933 (R501A26 NAT, R502A26 BLK, R503A26 NAT, R499A26 NAT, R500A26 BLK, R504A26 BLK, R505A26 NAT, R506A26 BLK)
LDW390-52905 (D239C26 BLK, D240C26 NAT, D338C26 BLK, D338C26 NAT, D234C26 BLK, D235C26 NAT, D229C26 BLK, D230C26 NAT)
For "A" System, Cluster III, emi (H)
LDW390-51934 (D194A26 RED, D195A26 BLK, D196A26 NAT)
For B System, Cluster III, emi (A)
LDW390-52630 (R281B16 NAT, R284B16 BLK) A-CR3B
LDW390-28958 (R283A16 RED, R282A16 NAT, R284J16 BLK) A-CR3B
LDW390-52628 (R295A20 NAT, S206?20 BLK, R287A20 RED, R68S22 NAT, R65F22 BLK) A-CR3B
B6
For Sys "A" & "B", Cluster III emi (C)
LDW390-52933 (R510A26 NAT, R509A26 BLK, R513A26 NAT, R508A26 NAT, R507A26 BLK, R511A26 NAT, R512A26 BLK, R514A26 BLK)
LDW390-52905 (D220C26 BLK, D221C26 NAT, D210C26 BLK, D215C26 BLK, D216C26 NAT, D211C26 NAT, D200C26 BLK, D201C26 NAT)
LDW280-10811-1 (REF)
LDW280-10378-13 (ON-3)
-14 (ON-4) (REF)
LDW280-10378-19 (ON-3)
-20 (ON-4) (REF)
LDW280-10378-15
(ON-3 & 4) (REF)
(A)
(A)
Section T-T 25/B
Full Size
UP
(H)
(E)
(A)
(A)
Section M-M 25/B
Full Size
(H)
(E)
(A)
(A)
Section L-L 25/B
Full Size
(A)
(A)
Section U-U 25/B
Full Size
Looking Aft. R.H. Side
Cluster III
(1/2 Size)

MANUFACTURING OPERATIONS
UNLESS OTHERWISE SPECIFIED
NOTES CHECKED √ APPLY TO THIS DWG.

PART NUMBER AND ALL OTHER MARKINGS IN REGION MARKED ⊠ USE BOTH SIDES IF NECESSARY.

FILLET AND INSIDE CORNER RADII TOLERANCES
.016R TO .062R ± .010
.063R TO .250R ± .015
OVER .250R ± .030

DEPTH SHOWN FOR TAPPED HOLES IS FULL THDS. 2-3 IMP THDS. BEYOND PERMISSIBLE.

EXTERNAL THREAD LENGTH SHOWN INCLUDES 2 IMPERFECT THREADS MAX.

DO NOT CADMIUM PLATE & PAINT HOLES OR SURFACES MARKED WITH DOUBLE ASTERISK.

MISMATCH STEP OF ± .005 PERMISSIBLE DUE TO CHANGE OF CUTTERS AT INSIDE INTERSECTING SURFACES.

DIAMETERS MARKED MUST BE CONCENTRIC WITHIN FULL INDICATOR READING

HOLES MUST BE KEPT FREE OF CHROME PLATING SOLUTION.

ALL DIMENSIONS SHOWN TO BE MET AFTER CADMIUM PLATING. THICKNESS OF PLATE .0003 MIN. TO .0005 MAX. MIN. THICKNESS TO BE .0002 ON THREADED AREAS. NO ALLOWANCE FOR PLATING IN HOLES

125 √ SURFACE ROUGHNESS INCLUDING REAMED HOLES PER MIL-STD-10

200 √ FOR ALL DRILLED HOLES

REMOVE ALL BURRS. BREAK ALL EDGES .015-.031

INSPECTION INFORMATION MINIMUM PERMISSIBLE AVERAGE EDGE DISTANCE MARKED IS

SYMBOL √ DENOTES SURFACE TO BE MACHINED

UNLESS OTHERWISE SPECIFIED TOLERANCE ON FLANGES IS ± 1/32

LENGTHS OF AN, NAS & MS AL ALY RIVETS SHORTER THAN 1 INCH ARE NOT SPECIFIED.

TOLERANCE ON LOFTED DELINEATIONS IS

02/02

NAS 9-1100

ELECTRONIC CABLING INSTALLATION
AFT R.C.S. CLUSTERS II & III
SECTION L-L TO U-U

(TO BE REDRAWN ON PRODUCTION FORMAT)

LEM 2(32)	GRUMMAN AIRCRAFT ENGRG CORP., BETHPAGE, L. I., NEW YORK			
	SIZE J	CODE IDENT NO. 26512	LDW280-52360	D
MODEL OR END ITEM	SCALE NOTED		SHEET 7.01	

THIS IS AN ORIGINAL D.. .

01/02 NAS 9-1100

JUMPER LETTER SYMBOL	LDW390-	EMI CODES	ZONE
A	21514	E	31-A
B	21512	H-B-C	31-A
C	21513	C	31-A
D	21510	H-E	31-A
E	52503	H	30-A
F	21504	H	30-A
G	51505	H	30-A
H	21495	H	30-A
J	21528	C	30-A
K	21527	C-E-H	30-A
L	21529	E-H	30-A
M	21526	E-H	30-A
N	52522	B-C-E-H	32-C
P	21519	A-E-H	32-C
Q	21496	C-E-H	32-C
R	51501	E	32-C
S	21502	E	32-C
T	21500	B-E-F-H	32-C
U	21497	E-H	33-C
V	52506	H	33-C
W	52507	A	33-C
X	21509	A-B-E-H	33-C
Y	51913	H	30-B
Z	21915	H	30-B
AA	52930	E	32-C
BB	21921	E	33-C
CC	52671	E	32-C

JUMPER CABLE LEGEND

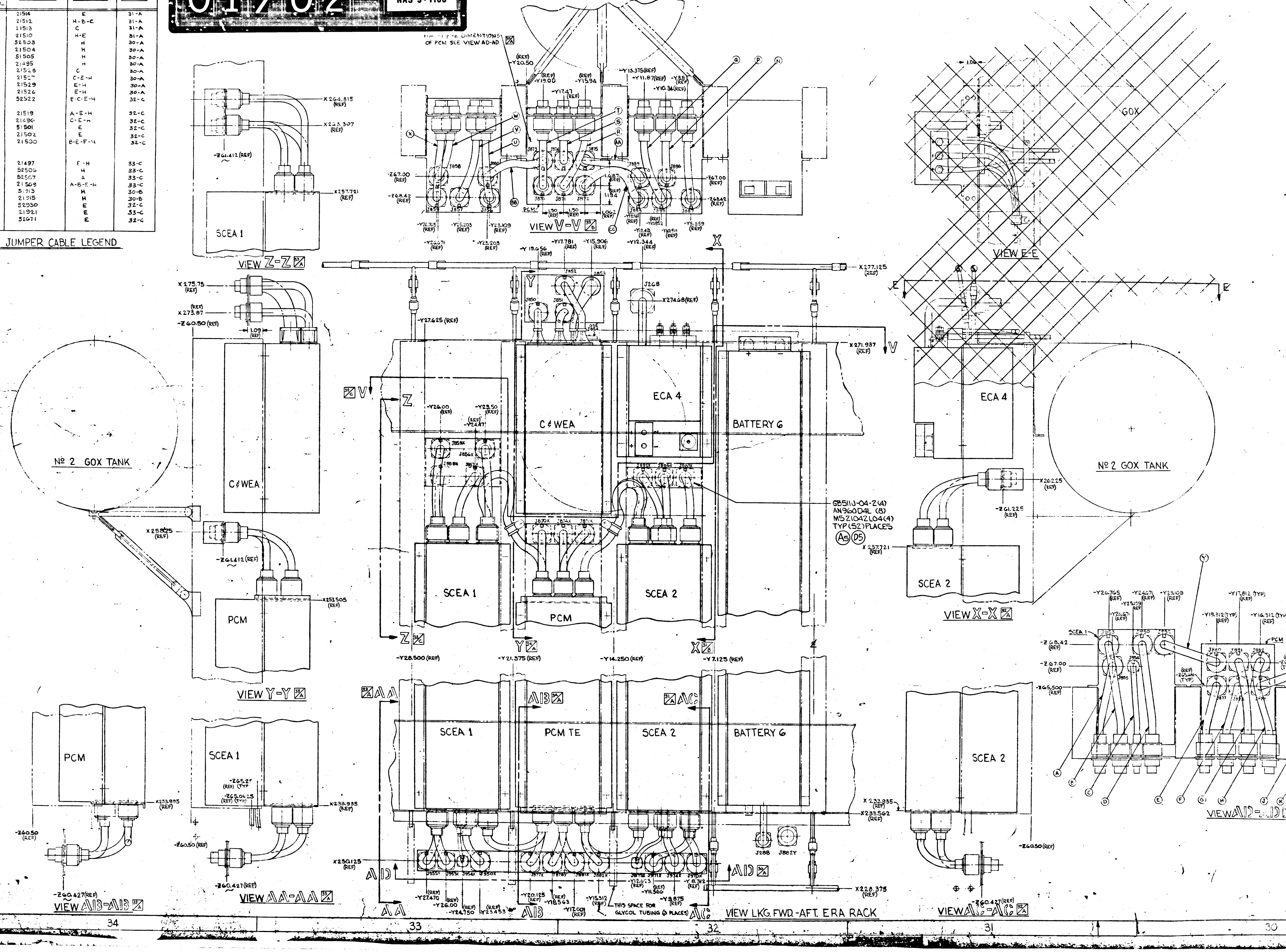

34
33
32
31
30
FOR Y & Z DIMENTIONS OF PCM SEE VIEW AD-AD
VIEW V-V
VIEW Z-Z
VIEW Y-Y
VIEW X-X
VIEW E-E
VIEW AA-AA
VIEW AB-AB
VIEW AC-AC
VIEW AD-AD
VIEW LKG. FWD.-AFT. ERA RACK
SCEA 1
SCEA 2
PCM
PCM TE
C & WEA
ECA 4
BATTERY 6
GOX
No 2 GOX TANK
J873
J874
J875
J858
J860
J859
J857
J856
J870
J871
J872
J889
J886
J885
J887
J852
J853
J850
J851
J268
J288
J882Y
-Y20.50 (REF)
-Y19.00 (REF)
-Y15.94 (REF)
-Y17.47 (REF)
-Y13.375 (REF)
-Y11.87 (REF)
-Y8.8 (REF)
-Y10.34 (REF)
-Z67.00 (REF)
-Z68.42 (REF)
1.687 (REF)
1.194 (REF)
1.50 (REF)
1.062 (REF)
-Y26.765 (REF)
-Y25.203 (REF)
-Y23.109 (REF)
-Y26.671 (REF)
-Y23.203 (REF)
-Y12.421 (REF)
-Y10.952 (REF)
-Y10.511 (REF)
-Y8.859 (REF)
-Y19.656 (REF)
-Y17.781 (REF)
-Y15.906 (REF)
-Y12.344 (REF)
X274.68 (REF)
X277.125 (REF)
X271.937 (REF)
X264.815 (REF)
X263.307 (REF)
-Z61.412 (REF)
X257.721 (REF)
X275.75 (REF)
X273.87 (REF)
-Z60.50 (REF)
1.09 (REF)
-Y27.625 (REF)
-Y26.00 (REF)
-Y23.50 (REF)
-Y24.47 (REF)
X258.25 (REF)
X253.505 (REF)
X262.25 (REF)
-Z61.225 (REF)
X257.721 (REF)
GB511U-04-Z (4)
AN960D4L (8)
MS21042L04 (4)
TYP (52) PLACES
-Y28.500 (REF)
-Y21.375 (REF)
-Y14.250 (REF)
-Y7.125 (REF)
X233.935 (REF)
X233.562 (REF)
-Z65.25 (REF) (TYP)
-Z65.0625 (REF) (TYP)
-Z60.50 (REF)
-Z60.427 (REF)
X230.125 (REF)
X228.375 (REF)
-Y27.470 (REF)
-Y26.00 (REF)
-Y24.750 (REF)
-Y23.453 (REF)
-Y20.125 (REF)
-Y18.563 (REF)
-Y17.001 (REF)
-Y15.312 (REF)
-Y12.623 (REF)
-Y11.560
-Y9.875 (REF)
-Y8.312 (REF)
THIS SPACE FOR GLYCOL TUBING (3 PLACES)
-Y17.812 (TYP)
-Y19.312 (TYP) (REF)
-Y16.312 (TYP) (REF)
-Z65.500 (REF)
X
Y
Z
V
E
AA
AB
AC
AD

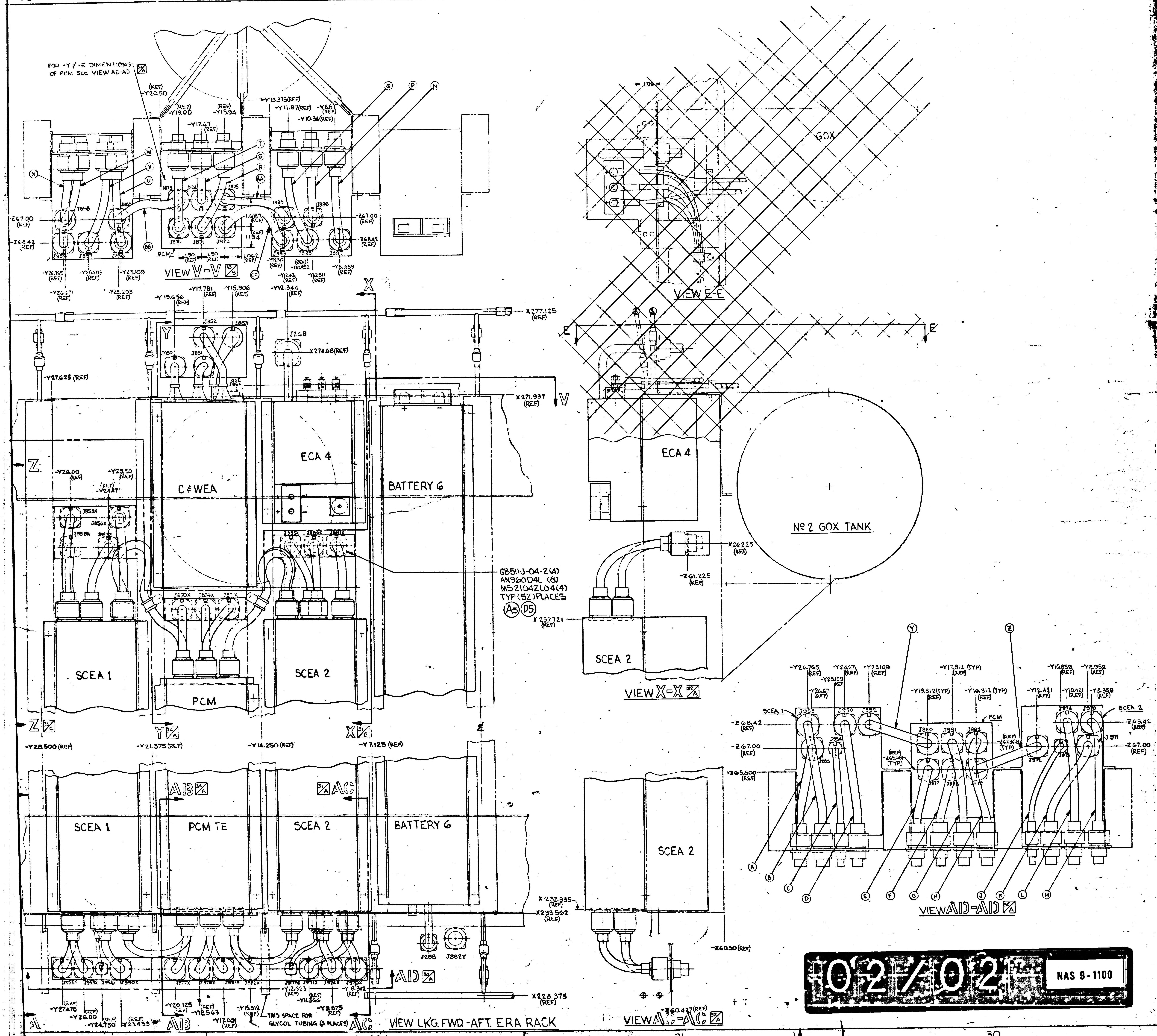

FOR -Y & -Z DIMENTIONS OF PCM SEE VIEW AD-AD
VIEW V-V
VIEW E-E
GOX
E
E
X
Y
Z
V
C & WEA
ECA 4
BATTERY 6
SCEA 1
SCEA 2
PCM
PCM TE
ECA 4
Nº 2 GOX TANK
VIEW X-X
VIEW AD-AD
VIEW AC-AC
VIEW LKG. FWD.-AFT. ERA RACK
GB511J-04-Z(4)
AN960D4L (8)
MS21042L04(4)
TYP (52) PLACES
A5 D5
X 277.125 (REF)
X 274.68 (REF)
X 271.937 (REF)
X 262.25 (REF)
-Z 61.225 (REF)
X 257.721 (REF)
X 233.935 (REF)
X 233.562 (REF)
X 228.375 (REF)
-Z 60.50 (REF)
-Z 60.427 (REF)
-Y 27.625 (REF)
-Y 28.500 (REF)
-Y 21.375 (REF)
-Y 14.250 (REF)
-Y 7.125 (REF)
-Z 67.00 (REF)
-Z 68.42 (REF)
-Z 65.500 (REF)
THIS SPACE FOR GLYCOL TUBING (3 PLACES)
SCEA 1
PCM
SCEA 2
J288
J882Y

02/02 NAS 9-1100

MANUFACTURING OPERATIONS UNLESS OTHERWISE SPECIFIED NOTES CHECKED √ APPLY TO THIS DWG.	
PART NUMBER AND ALL OTHER MARKINGS IN REGION MARKED ▭ USE BOTH SIDES IF NECESSARY.	
FILLET AND INSIDE CORNER RADII TOLERANCES .016R TO .062R ± .010 .063R TO .250R ± .015 OVER .250R ± .030	
DEPTH SHOWN FOR TAPPED HOLES IS FULL THDS. 2-3 IMP THDS. BEYOND PERMISSIBLE.	
EXTERNAL THREAD LENGTH SHOWN INCLUDES 2 IMPERFECT THREADS MAX.	
DO NOT CADMIUM PLATE & PAINT HOLES OR SURFACES MARKED WITH DOUBLE ASTERISK.	
MISMATCH STEP OF ± .005 PERMISSIBLE DUE TO CHANGE OF CUTTERS AT INSIDE INTERSECTING SURFACES.	
DIAMETERS MARKED MUST BE CONCENTRIC WITHIN FULL INDICATOR READING	
HOLES MUST BE KEPT FREE OF CHROME PLATING SOLUTION.	
ALL DIMENSIONS SHOWN TO BE MET AFTER CADMIUM PLATING. THICKNESS OF PLATE .0003 MIN. TO .0005 MAX. MIN. THICKNESS TO BE .0002 ON THREADED AREAS. NO ALLOWANCE FOR PLATING IN HOLES	
125 SURFACE ROUGHNESS INCLUDING REAMED HOLES PER MIL-STD-10	
200 FOR ALL DRILLED HOLES	
REMOVE ALL BURRS. BREAK ALL EDGES .015-.031	
INSPECTION INFORMATION MINIMUM PERMISSIBLE AVERAGE EDGE DISTANCE MARKED IS	
SYMBOL √ DENOTES SURFACE TO BE MACHINED	
UNLESS OTHERWISE SPECIFIED TOLERANCE ON FLANGES IS ± 1/32	
LENGTHS OF AN, NAS & MS AL ALY RIVETS SHORTER THAN 1 INCH ARE NOT SPECIFIED.	
TOLERANCE ON LOFTED DELINEATIONS IS	

DWG SIZE 34 X

PRINTING INFO ONLY
FULL SIZE SHEET AREA (36 X)= SQ. FT.
1/2 SIZE SHEET AREA (1/4 OF FULL)= SQ. FT.

PRINT TRIM LINE

C

B

A

LDW280-52360 D

LDW280-52360 D

ELECTRONIC CABLING INSTALLATION

LOOKING FWD. AT AFT. BAY EQUIP. RACK
(JUMBER INST'L)

VIEW V-V TO AD-AD

(TO BE REDRAWN ON PRODUCTION FORMAT)

LEM 2 (32)	GRUMMAN AIRCRAFT ENGRG CORP., BETHPAGE, L. I., NEW YORK			
	SIZE J	CODE IDENT NO. 26512	LDW280-52360	D
MODEL OR END ITEM	SCALE HALF		SHEET 8.00	

THIS IS AN ORIGINAL DWG

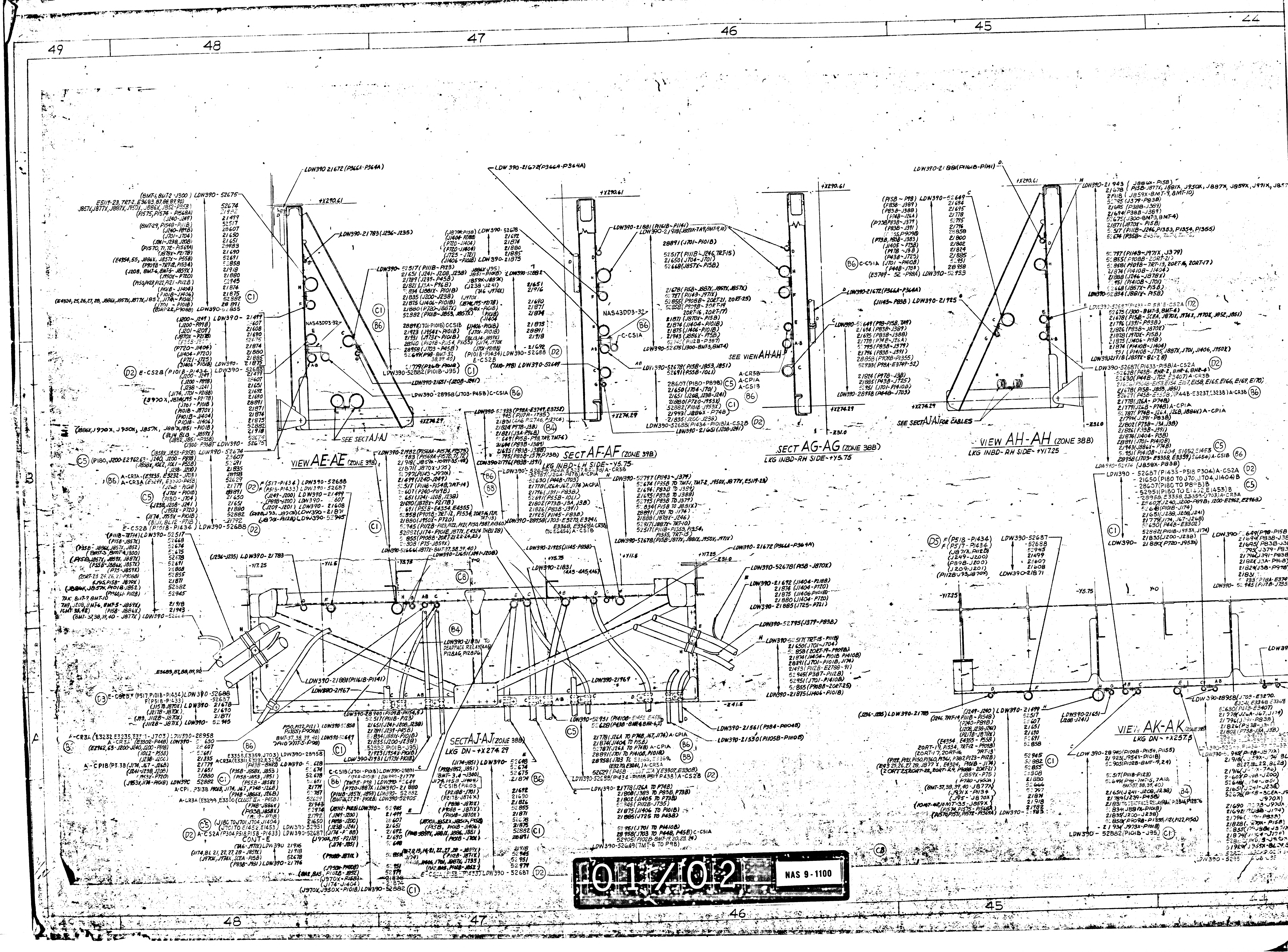

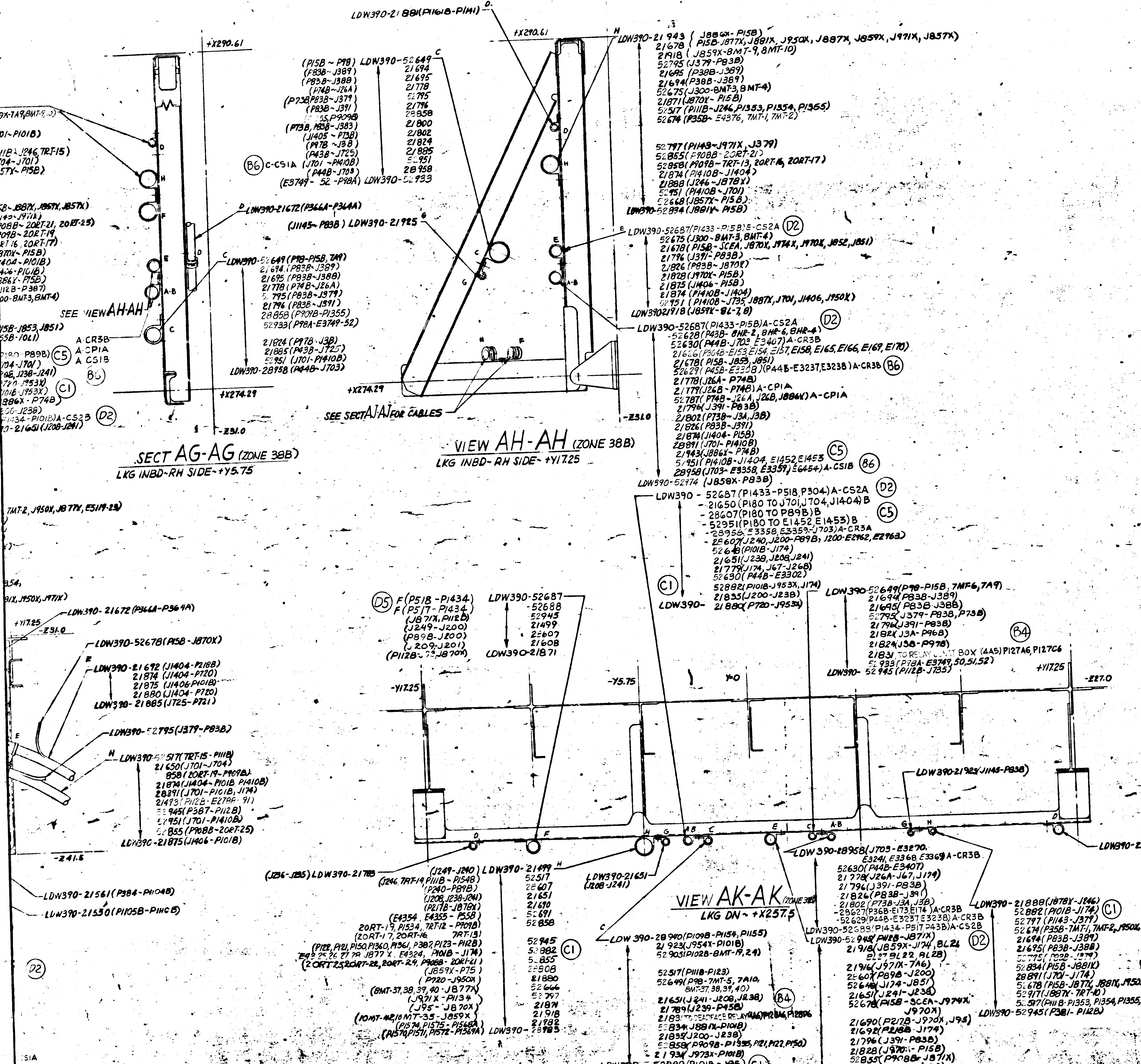
SECT AG-AG (ZONE 38B)
LKG INBD-RH SIDE-+Y5.75
VIEW AH-AH (ZONE 38B)
LKG INBD-RH SIDE-+Y17.25
SEE VIEW AH-AH
SEE SECT AJ-AJ FOR CABLES
VIEW AK-AK (ZONE 38B)
LKG DN-+X257.5
+X290.61
+X274.29
-Z31.0
-Z27.0
-Y17.25
+Y17.25
-Y5.75
Y0

02/02

NAS 9-1100

MANUFACTURING OPERATIONS
UNLESS OTHERWISE SPECIFIED
NOTES CHECKED ✓ APPLY TO THIS DWG.

PART NUMBER AND ALL OTHER MARKINGS IN REGION MARKED ⊠ USE BOTH SIDES IF NECESSARY.

FILLET AND INSIDE CORNER RADII TOLERANCES
.016R TO .062R ± .010
.063R TO .250R ± .015
OVER .250R ± .030

DEPTH SHOWN FOR TAPPED HOLES IS FULL THDS. 2-3 IMP THDS. BEYOND PERMISSIBLE.

EXTERNAL THREAD LENGTH SHOWN INCLUDES 2 IMPERFECT THREADS MAX.

DO NOT CADMIUM PLATE & PAINT HOLES OR SURFACES MARKED WITH DOUBLE ASTERISK.

MISMATCH STEP OF ± .005 PERMISSIBLE DUE TO CHANGE OF CUTTERS AT INSIDE INTERSECTING SURFACES.

DIAMETERS MARKED MUST BE CONCENTRIC WITHIN FULL INDICATOR READING

HOLES MUST BE KEPT FREE OF CHROME PLATING SOLUTION.

ALL DIMENSIONS SHOWN TO BE MET AFTER CADMIUM PLATING. THICKNESS OF PLATE .0003 MIN. TO .0005 MAX. MIN. THICKNESS TO BE .0002 ON THREADED AREAS. NO ALLOWANCE FOR PLATING IN HOLES

125 SURFACE ROUGHNESS INCLUDING REAMED HOLES PER MIL-STD-10

200 FOR ALL DRILLED HOLES

REMOVE ALL BURRS. BREAK ALL EDGES .015-.031

INSPECTION INFORMATION MINIMUM PERMISSIBLE AVERAGE EDGE DISTANCE MARKED IS

SYMBOL √ DENOTES SURFACE TO BE MACHINED

UNLESS OTHERWISE SPECIFIED TOLERANCE ON FLANGES IS ± 1/32

LENGTHS OF AN, NAS & MS AL ALY RIVETS SHORTER THAN 1 INCH ARE NOT SPECIFIED.

TOLERANCE ON LOFTED DELINEATIONS IS

DWG SIZE 34 X

PRINTING INFO ONLY
FULL SIZE SHEET AREA (36 X)= SQ. FT.
1/2 SIZE SHEET AREA (1/4 OF FULL)= SQ. FT.

PRINT TRIM LINE

LDW280-52360 D

ELECTRONIC CABLE INSTALLATION

AFT EQUIP BAY - -Z27 BHD
VIEWS AE-AE ~ AK-AK

LEM-2	GRUMMAN AIRCRAFT ENGRG CORP., BETHPAGE, L. I., NEW YORK			
	SIZE J	CODE IDENT NO. 26512	LDW280-52360	D
MODEL OR END ITEM	SCALE NONE		SHEET 10.00	

THIS IS AN ORIGINAL DWG

E. SALAGE
X6566
9-6-66

01/02

NAS 9-1100

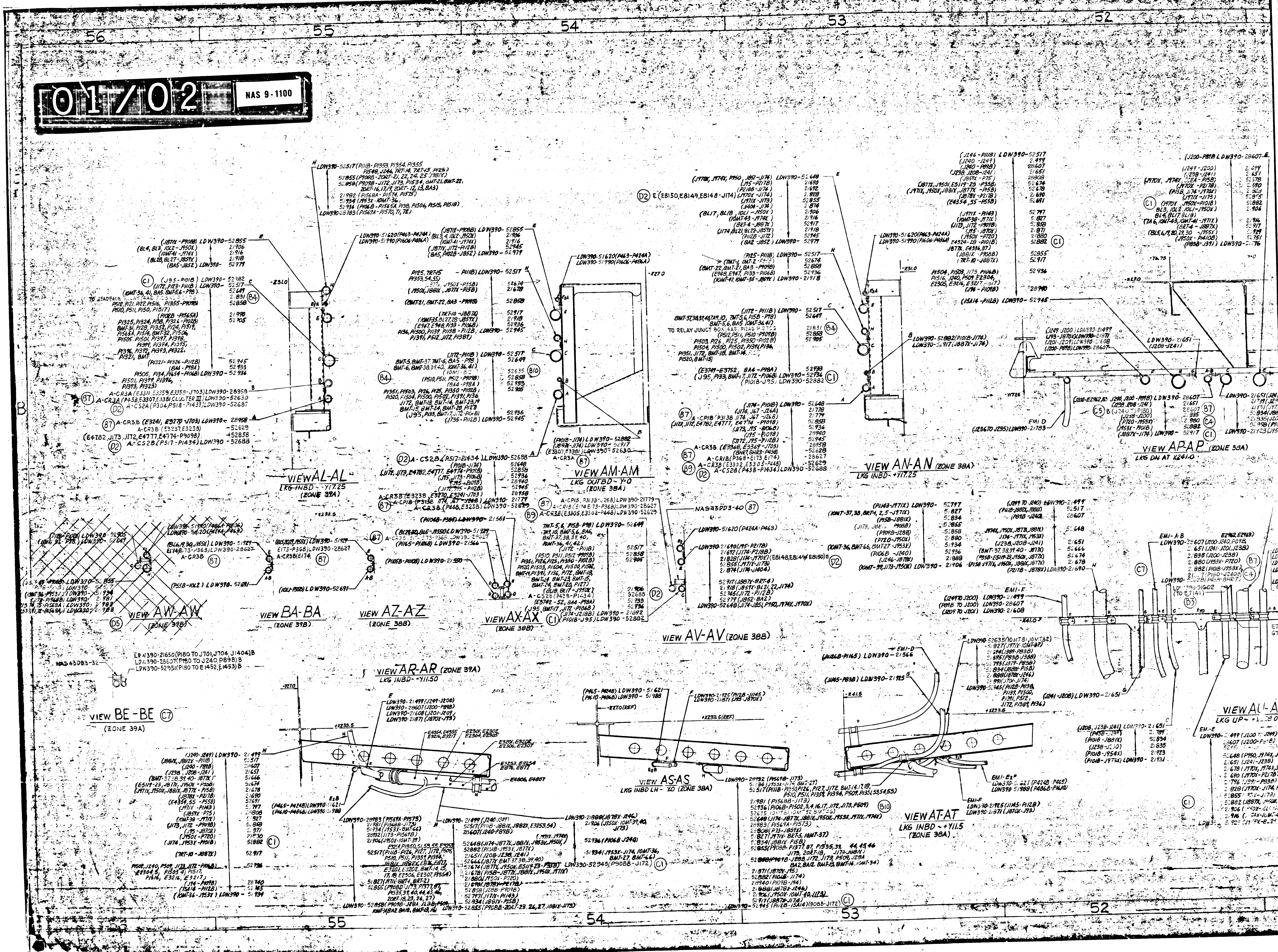

56
55
54
53
52
VIEW AL-AL
LKG INBD ~ -Y17.25
(ZONE 39A)
VIEW AM-AM
LKG OUTBD ~ Y-0
(ZONE 38A)
VIEW AN-AN (ZONE 38A)
LKG INBD ~ +Y17.25
VIEW AP-AP (ZONE 38A)
LKG DN AT X241.0
VIEW AW-AW
(ZONE 39B)
VIEW BA-BA
(ZONE 39B)
VIEW AZ-AZ
(ZONE 38B)
VIEW AX-AX
(ZONE 38B)
VIEW AV-AV (ZONE 38B)
VIEW AR-AR (ZONE 39A)
LKG INBD ~ -Y11.50
VIEW BE-BE
(ZONE 39A)
VIEW AS-AS
LKG INBD LH ~ Y.0 (ZONE 38A)
VIEW AT-AT
LKG INBD ~ +Y11.5
(ZONE 38A)
VIEW AU-A
LKG UP
NAS43DD3-40
NAS43DD3-32
LDW390-21650 (P180 TO J701, J704, J1404) B
LDW390-28607 (P180 TO J240, P898) B
LDW390-52951 (P180 TO E1452, E1453) B
TO RELAY JUNCT BOX, 4A5
EMI D
EMI-F
EMI-E
EMI-A-B
A-CR3A
A-CR3B
A-CS2A
A-CS2B
A-CP1B
A-CR1B
Z310
Z270
X233.5
Y41.5

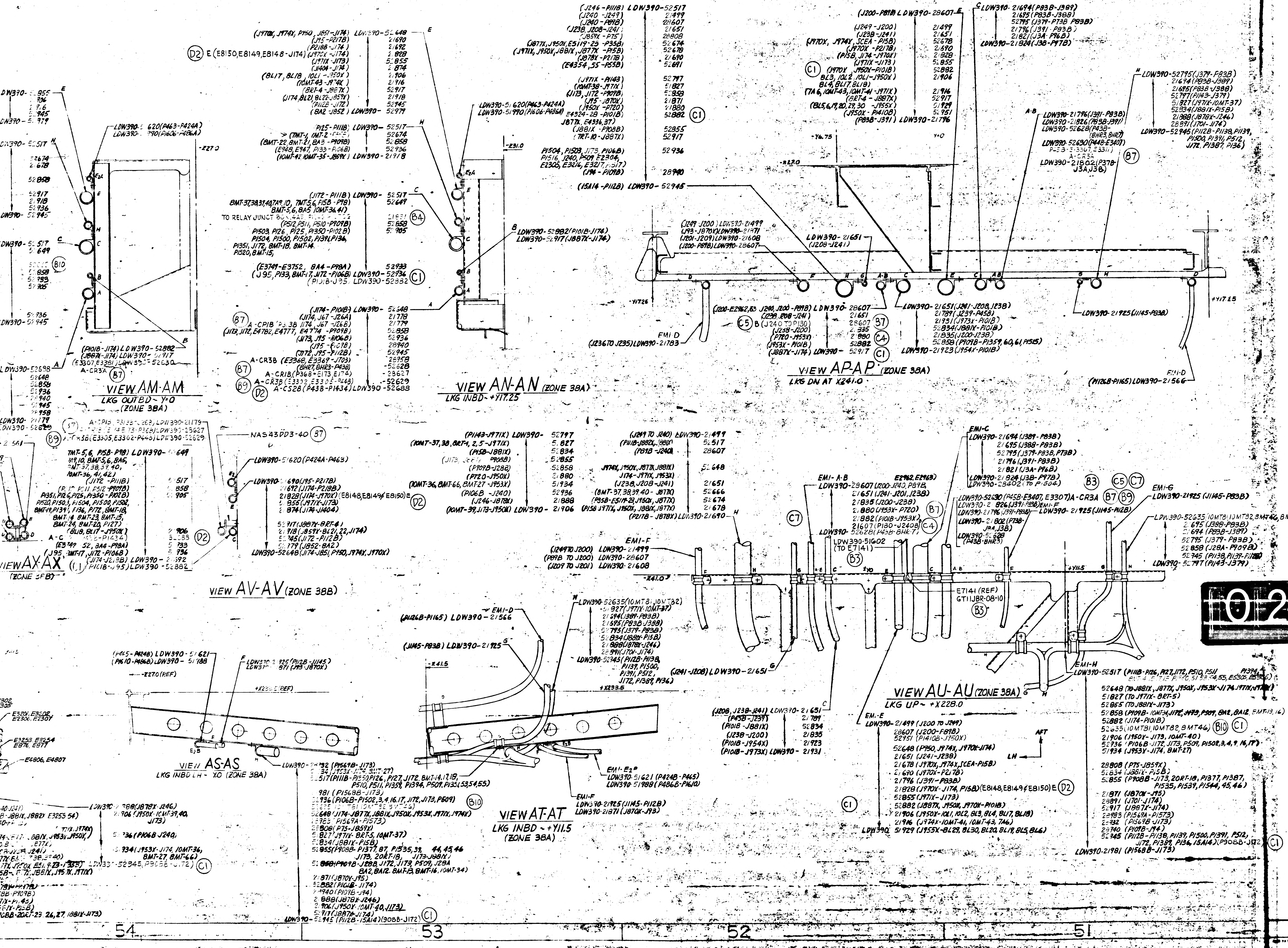

54
53
52
51
50
VIEW AM-AM
LKG OUTBD ~ Y-0
(ZONE 38A)
VIEW AN-AN (ZONE 38A)
LKG INBD ~ +Y17.25
VIEW AP-AP (ZONE 38A)
LKG DN AT X241.0
VIEW AX-AX
(ZONE 38B)
VIEW AV-AV (ZONE 38B)
VIEW AS-AS
LKG INBD LH ~ X0 (ZONE 38A)
VIEW AT-AT
LKG INBD ~ +Y11.5
(ZONE 38A)
VIEW AU-AU (ZONE 38A)
LKG UP ~ +X228.0
EMI-A-B
EMI-C
EMI-D
EMI-E
EMI-F
EMI-G
EMI-H
E7141 (REF)
GT11JBR-08-10
NAS 43DD3-40

02/02 NAS 9-1100

MANUFACTURING OPERATIONS

UNLESS OTHERWISE SPECIFIED NOTES CHECKED √ APPLY TO THIS DWG.

PART NUMBER AND ALL OTHER MARKINGS IN REGION MARKED ☒ USE BOTH SIDES IF NECESSARY.

FILLET AND INSIDE CORNER RADII TOLERANCES
.016R TO .062R ± .010
.063R TO .250R ± .015
OVER .250R ± .030

DEPTH SHOWN FOR TAPPED HOLES IS FULL THDS. 2-3 IMP THDS. BEYOND PERMISSIBLE.

EXTERNAL THREAD LENGTH SHOWN INCLUDES 2 IMPERFECT THREADS MAX.

DO NOT CADMIUM PLATE & PAINT HOLES OR SURFACES MARKED WITH DOUBLE ASTERISK.

MISMATCH STEP OF ± .005 PERMISSIBLE DUE TO CHANGE OF CUTTERS AT INSIDE INTERSECTING SURFACES.

DIAMETERS MARKED MUST BE CONCENTRIC WITHIN FULL INDICATOR READING

HOLES MUST BE KEPT FREE OF CHROME PLATING SOLUTION.

ALL DIMENSIONS SHOWN TO BE MET AFTER CADMIUM PLATING. THICKNESS OF PLATE .0003 MIN. TO .0005 MAX. MIN. THICKNESS TO BE .0002 ON THREADED AREAS. NO ALLOWANCE FOR PLATING IN HOLES

125√ SURFACE ROUGHNESS INCLUDING REAMED HOLES PER MIL-STD-10

200√ FOR ALL DRILLED HOLES

REMOVE ALL BURRS. BREAK ALL EDGES .015-.031

INSPECTION INFORMATION MINIMUM PERMISSIBLE AVERAGE EDGE DISTANCE MARKED IS

SYMBOL √ DENOTES SURFACE TO BE MACHINED

UNLESS OTHERWISE SPECIFIED TOLERANCE ON FLANGES IS ± 1/32

LENGTHS OF AN, NAS & MS AL ALY RIVETS SHORTER THAN 1 INCH ARE NOT SPECIFIED.

TOLERANCE ON LOFTED DELINEATIONS IS

ELECTRONIC CABLE INSTALLATION

AFT EQUIP BAY - Z 220 B-D

VIEWS AL-AL TO BA-BA

LEM-2	GRUMMAN AIRCRAFT ENGRG CORP., BETHPAGE, L. I., NEW YORK		
	SIZE J	CODE IDENT NO. 26512	LDW280-52360
MODEL OR END ITEM	SCALE NONE		SHEET 11

50 THIS IS AN ORIGINAL I-4

E SALAGE ~~6-30-66~~ 8-18-66
X6566 ~~8-4-66~~

LDW280-52360 E

MODEL OR END ITEM	NEXT ASSY	MODULE OR SER NO.	REQD PER MODULE OR END ITEM
PART NO.		GAEC SCH NO.	

MODEL OR END ITEM	NEXT ASSY	MODULE OR SER NO.	REQD PER MODULE OR END ITEM
PART NO.		GAEC SCH NO.	

MODEL OR END ITEM	NEXT ASSY	MODULE OR SER NO.	REQD PER MODULE OR END ITEM
LEM	LDW280-52001	LEM 2(32)	1
PART NO. LDW280-52360-1		GAEC SCH NO. 30 —	

TO BE REDRAWN ON PRODUCTION FORMAT 5

SH REV STATUS: FOR DESCRIPTION OF REV SEE SUBQ SH

SHEET	1.00	1.10	1.11	2.00	2.01	2.02	1.12	3.00	3.01
REV	E	D	D	E	D	D	D	D	E
SHEET	4.00	5.00	6.00	~~7.00~~	8.00	9.00	10.00	11.00	12.00
REV	E	E	E	~~D~~	D	E	D	D	E
SHEET	1.13	1.14	1.15						
REV	D	E	E						

LAST SECT LTR USED BG

LAST DASH NO. USED -1

GRUMMAN REL INFO E

PRIM NO. 420

JK(001)

MP-1E-1/27/?

UNLESS OTHERWISE SPECIFIED DIMENSIONS ARE IN INCHES.
TOLERANCE UNLESS SPECIFIED
FRACTIONS - DECIMALS – ANGLES

ORIG DWG AUTH

DETAIL SPEC REQUIREMENT

CLASS II ENGRG CHANGE

CLASS I ENGRG CHANGE

CONTRACT NO. NAS 9-1100

LINE ITEM 080

DOCUMENTATION TYPE ~~III~~ II

DRAWN BY	A. MARCUS 9/10/66	WEIGHTS	[illegible]
LAYOUT BY	C.H. COHEN		
CHECKED BY			
GR. LDR	JW/CH Cohen 9/10/66		
V.D.I.	[illegible] 9/12		
STRUCT.	B 78 JV [illegible] 9/12	PROJ ENGR	[illegible] 9-13
STRUCT.	HILDEGMAN 9/12	REL GROUP	[illegible]

GRUMMAN AIRCRAFT ENGRG CORP
BETHPAGE, L. I., NEW YORK

LINES INSTALLATION ELECTRONIC
ASCENT STAGE ~ AFT. EQUIP BAY

SIZE B

CODE IDENT NO. 26512

LDW280-52360 E

SCALE NONE

SHEET 1.00 OF 20.00

ENG 77 1 12-65

THIS IS AN ORIG DWG

01

NAS 9-1100

REVISIONS FOR CONTINUATION OF REVISIONS SEE SHEET

CHANGE LTR	ITEM NO.	SHEET NO.	ZONE	GRUMMAN INFO ONLY PRIOR TO EVENT	DET SPEC	CLASS I	CLASS II	ENGRG ORDER	DESCRIPTION	EFFECTIVITY	DISPOSITION OF EXISTING PARTS REWORK	DISPOSITION OF EXISTING PARTS SCRAP	CHANGED BY AND DATE	ENGRG APPD	GOVT APPD
									DELETED: SH. 7.00, ADDED: SHTS 1.14, 1.15 & 12.00 LAST SECTION LTR BG WAS BE SH. 1 OF 20 WAS SH. 1 OF 18						
E	1	9.00	39A	E			✓	EO E1 LCD 1078	ON -1 INSTL; ADDED: NAS43DD3-32 (1)	LM-2(32)	✓		A. A. ARTEN 1-18-68		
	2	1.00 2.00 4.00 6.00 9.00	3C 6C 17B 21B 37B 39B	E		✓		EO E2 LCD 2229	ON -1 INSTL; DELETED: SHEET # 7.00, ADDED SHEET 12.00 ADDED: LDW280-52988-3 & -5 (1) EACH TO CLUSTER II (8A4), "SEE SH 12 ZONES 60A,58C" TO CLUSTER III (8A3), "SEE SH 12 ZONES 65A,66C" TO CLUSTER II (8A4), "SEE SH. 12 ZONES 60A,58C" TO CLUSTER III (8A3), "SEE SH 12 ZONES 65A,66C" (WAS) "SEE SH. 7 ZONE 24 B" (4 TIMES) ADDED: LDW390-52858 (EMI H)(REF.) LDW390-52517 (P111B-8MT 19,-20-23-24) LDW390-21821 (EMI C) HEATER SYS 1(REF) "FOR CONTINUATION SEE SH12, Z60A" (WAS): LDW390-52858 (P909B,8A3,8MT,21,22) LDW390-52517 (P111B,8MT-19,-20,-23,-24) LDW390-52983 (P98A-8A3) RESP'LY ADDED: LDW390-52858 (EMI H)(REF.) LDW390-52858 (8MT-25-28,8A4 & P909B) LDW 390-21821 (EMI C)(HEATER SYS.1)(REF) "FOR CONTINUATION, SEE SH.12 Z 64,65A" (WAS): LDW390-52517 (P111B,8MT.26,27,29,30) LDW390-52933 (P98A-8A4) LDW390-52905 (P102B-8MT 26,27,29,30)						
	3	2.00 4.00	5C	E			✓	EO E3 LCD 2270	ON -1 INSTL; ADDED: E4411N3 GROUND & GT11J-BR-3-12 RELOCATED: E3513 GROUND.						
	4	4.00 5.00	7B 13B	E		✓		EO E4 LCD 2223 CCA 245	CANCELLED BY EO E7						

CHG APPROVED LTR	GROUP LDR	VDI			STRUCTURES	STRUCTURES					
E											

GRUMMAN AIRCRAFT ENGRG CORP., BETHPAGE, L. I., NEW YORK

SIZE	CODE IDENT NO.		
B	26512	LDW280-52360	E

SCALE NONE SHEET 1.14

ENG 77.16 3-66

01

NAS 9-1100

REVISIONS FOR CONTINUATION OF REVISIONS SEE SHEET ______

CHANGE LTR	ITEM NO.	SHEET NO.	ZONE	GRUMMAN INFO ONLY PRIOR TO EVENT	DET SPEC	CLASS I	CLASS II	ENGRG ORDER	DESCRIPTION	EFFECTIVITY	DISPOSITION OF EXISTING PARTS REWORK	DISPOSITION OF EXISTING PARTS SCRAP	CHANGED BY AND DATE	ENGRG APPD	GOVT APPD
E	5	4.00	6C					EO E5	ON -1 INSTL; ADDED: 3'O'CLOCK TO J383 KEYWAY	LM 2 (32)	✓		AAARTEN 1-18-68		
	6	3.01 4.00	 5A				✓	EO E6	ON -1 INSTL; ADDED: NOTE #20 ORIENTED J3A & J3B KEYWAYS						
	7	4.00 5.00	7B 13B			✓		EO E7 LCD 2223/CCA745 Ⓔ	CANCELLED: EO E4						

CHG APPROVED

LTR	GROUP LDR			STRUCTURES	STRUCTURES					
E										

GRUMMAN AIRCRAFT ENGRG CORP., BETHPAGE, L. I., NEW YORK

SIZE	CODE IDENT NO.		
B	26512	LDW280-52360	E Ⓔ

SCALE NONE SHEET 1.15

ENG 77.16 3-66

01

NAS 9-1100

CL	QTY PER ASSEMBLY					-1	CODE IDENT	PART NO.	I&T	NOMENCLATURE OR DESCRIPTION	MATERIAL	GOVT SPEC	COML SPEC	STOCK SIZE	PROCESS SYM	FINISH NO.	ZONE
A						1		LDW360-52312-2	E	TRANSDUCER INSTL	SEE DWG.						
A						1		LDW360-52312-1	E	TRANSDUCER INSTL	SEE DWG.						
A						2		LDW280-1413615	E	TEE	SEE DWG						
A						1		AN960D816	E	WASHER	STD. PART						
						10		AN960D8L	E	WASHER	STD PART						
						472		AN960D4L	E	WASHER	STD PART						
						1		GT11J-BR08-10	E	TERM. INSTL	GRUM STD.						
						96		GT11J-BR08-12	E	TERM. INST'L	GRUM. STD.						
						4		GT11J-BR3-12	E	TERM. INST'L							
						8		GB511J-04-7	E	BOLT							
						228		GB511J-04-2	E	BOLT							
						SEE NOTE 8		GB511J-3-10	E	BOLT							
						SEE NOTE 8		GB511J-3-2	E	BOLT							
						AS REQ'D		GB511J-08-16	E	BOLT							
								-13	E								
								-8	E								
								-6	E								
								-5	E								
								-4	E								
								-3	E								
								-2	E								
						AS REQ'D		GB511J-08-1	E	BOLT	GRUM. STD.						
A						2		LDW280P16223-1	E	SEPARATOR	SEE DWG						
A																	
						1		LDW390-52201-1	E	BASE ASS'Y.	SEE DWG						
A						1		LDW390-52014-1	E	AREA INSTL							
						1		LDW280-52988-5	E	CLUSTER INSTL							
						1		LDW280-52988-[illegible]	E	CLUSTER INSTL	SEE DWG						
						1		LDW280-52360-1	E	LINES INST'L. ELECT.							

CL: CLEANLINESS LEVEL

SYM OR NO.	PROCESS OR FINISH	GRUMMAN SPEC OR MILITARY SPEC	SYM OR NO.	PROCESS OR FINISH	GRUMMAN SPEC OR MILITARY SPEC	SYM OR NO.	PROCESS OR FINISH	GRUMMAN SPEC OR MILITARY SPEC

I & T: IDENTIFICATION AND TRACEABILITY IN ACCORDANCE WITH : NONE

GRUMMAN AIRCRAFT ENGRG CORP, BETHPAGE, L. I., NEW YORK

SIZE	CODE IDENT NO.		
B	26512	LDW280-52360	E

SCALE NONE

SHEET 2.00

E

THIS IS AN [illegible] DWG

ENG 77.2 7-65

01

NAS 9-1100

NOTES: (CONTD)

17. ~~UPON INSTALLATION OF TERMINAL LUGS ON BATTERIES, ECA'S AND CIRCUIT BREAKERS IMMEDIATELY CONFORMAL COAT AS FOLLOWS:~~
~~(A) APPLY PRIMER PER LSP 14-14201. CARE MUST BE TAKEN NOT TO APPLY TOO HEAVY A COAT OF PRIMER.~~
~~(B) AFTER ALLOWING A MINIMUM OF 30 MINUTES DRYING TIME FOR PRIMER, MIX (EC1663A/B) SEALANT COMPOUND PER LSP 14-14201 & APPLY FIRST COATING OVER ALL EXPOSED SURFACES.~~
~~(C) AFTER FIRST COATING CURES, APPLY SECOND & THIRD COAT OF SAME SEALANT COMPOUND ALLOWING 24 HOURS CURING TIME BETWEEN COATS PER LSP 14-14201.~~
~~NOTE: CARE MUST BE TAKEN THAT EACH COAT COMPLETELY COVERS PRECEEDING COAT & ANY EXPOSED PRIMER.~~

18. SELECTION & INST'L OF LINE CLAMPS & CHAFE STRIPS TO BE IN ACCORDANCE WITH LPC 280-23 EXCEPT AS NOTED

19. REMOVE DUST CAP & CHAIN FROM J1138, J1139 & J387 CONNECTORS PRIOR TO INSTALLATION OF CABLES. CUT CHAIN AT LAST LINK ATTACHED TO BOX.

20. ALL RECEPTACLES MOUNTED IN ACCORDANCE WITH THIS DRAWING ARE TO HAVE KEYWAYS POSITIONED IN THE +X OR +Z DIRECTION, UNLESS OTHERWISE NOTED.

GRUMMAN AIRCRAFT ENGRG CORP., BETHPAGE, L. I., NEW YORK

SIZE	CODE IDENT NO.		
B	26512	LDW280-52360	E
SCALE NONE		SHEET 3.01	

ENG 73.1 6-64

01 NAS 9-1100

011/02 NAS 9-1100

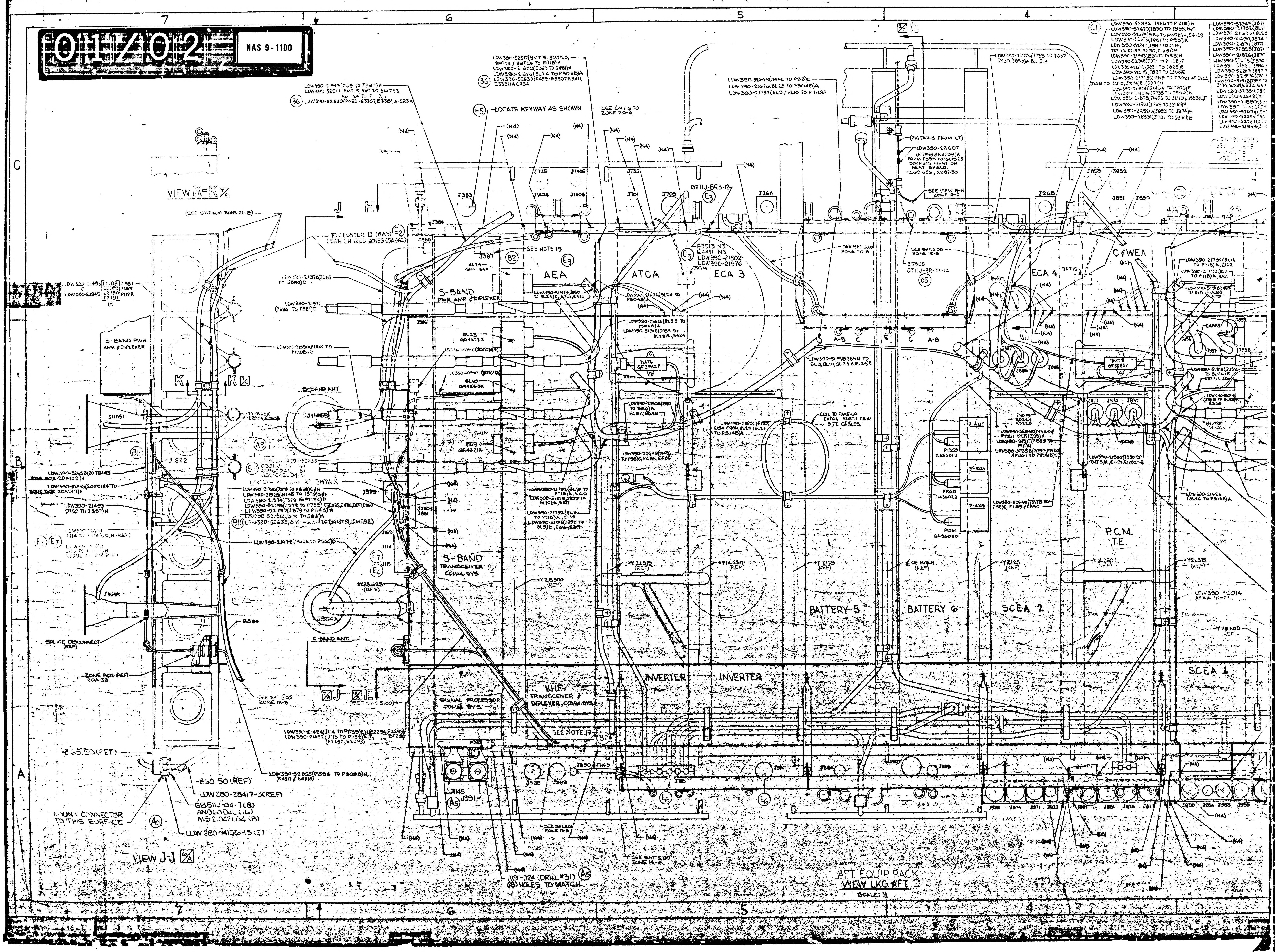

7
6
5
4
C
B
A
VIEW K-K
S-BAND PWR AMP & DIPLEXER
J1105B
J1822
J364A
P1594
SPLICE DISCONNECT (REF)
ZONE BOX (REF) 20A138
-Z65.50 (REF)
-Z60.50 (REF)
LDW280-28417-3C (REF)
GB511J-04-7 (8)
AN960D4L (16)
MS21042L04 (8)
LDW280-14136-15 (2)
MOUNT CONNECTOR TO THIS SURFACE
VIEW J-J
LOCATE KEYWAY AS SHOWN
SEE SHT. 6.00 ZONE 20-B
TO CLUSTER II (8A3) (SEE SH 12.00 ZONES 65A 66C)
SEE NOTE 19
S-BAND PWR. AMP. & DIPLEXER
AEA
ATCA
ECA 3
ECA 4
C & WEA
S-BAND ANT.
C-BAND ANT.
S-BAND TRANSCEIVER COMM. SYS.
+Y35.625 (REF)
+Y28.500 (REF)
+Y21.375 (REF)
+Y14.250 (REF)
+Y7.125
℄ OF RACK (REF)
-Y7.125
-Y14.250
-Y21.375 (REF)
-Y28.500 (REF)
COIL TO TAKE-UP EXTRA LENGTH FROM 5 FT. CABLES
BATTERY 5
BATTERY 6
SCEA 2
SCEA 1
P.C.M. T.E.
INVERTER
INVERTER
V.H.F. TRANSCEIVER & DIPLEXER, COMM. SYS.
SIGNAL PROCESSOR COMM. SYS.
PIGTAILS FROM LT.
LDW390-28607 (E3858 & E4208) A FROM P898 TO 160525 DOCKING LIGHT ON HEAT SHIELD -Z65.650, +X287.50
SEE VIEW H-H ZONE 19-C
GT11J-BR3-12
E3513 N3
E4411 N3
LDW390-21802
LDW390-21976
SEE SHT. 5.00 ZONE 13-B
.119-.124 (DRILL #31) (8) HOLES TO MATCH
(N4)

AFT. EQUIP. RACK
VIEW LKG AFT
SCALE: 1/2

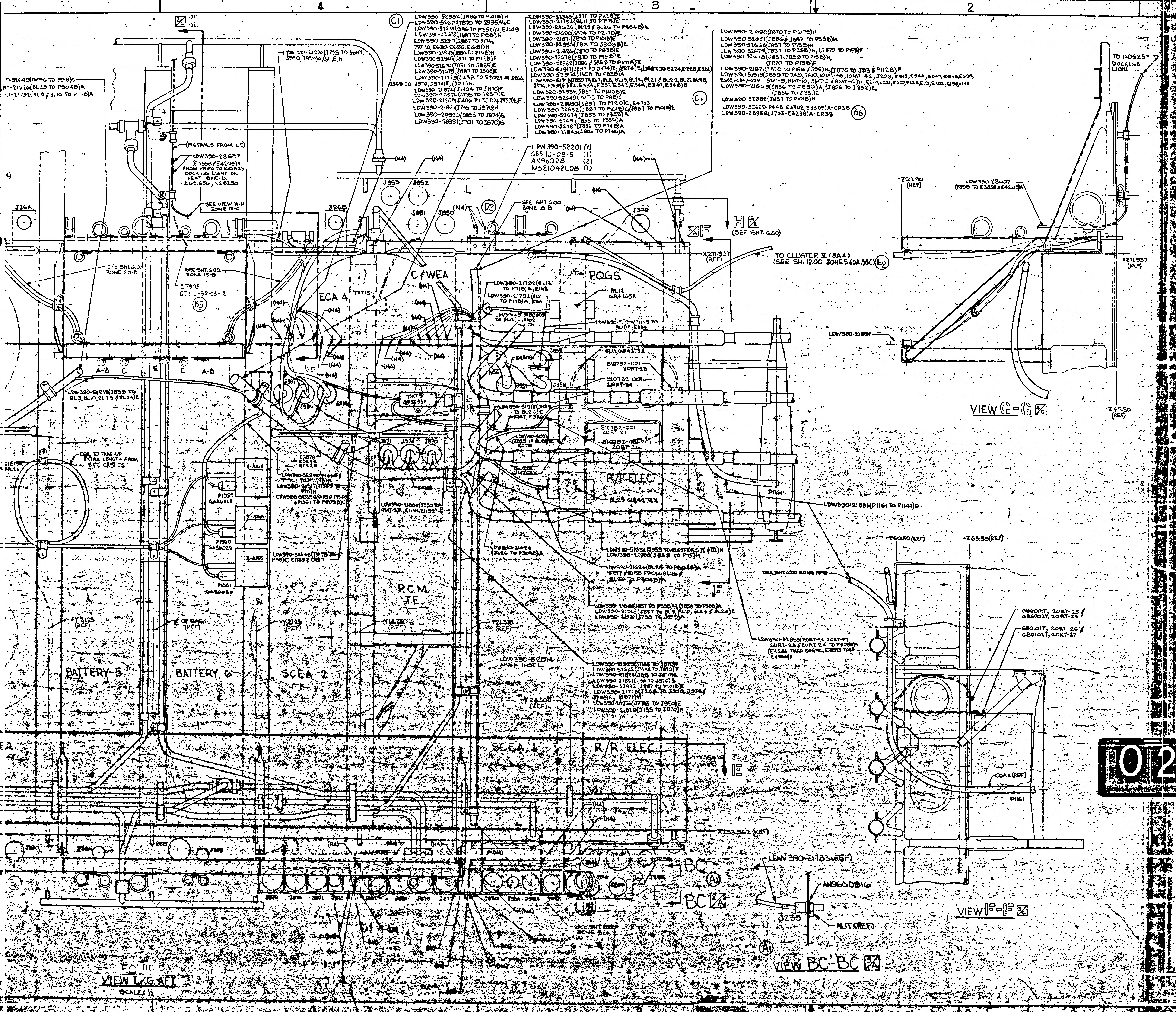
4
3
2
1
C1
LDW390-52882(J886 TO P101B)H
LDW390-52670(J850 TO J885)H,C
LDW390-52674(886 TO P35B)H, E4629
LDW390-52678(J887 TO P15B)H
LDW390-52917(J887 TO J174, 7RT-10, E689 E690, E691)H
LDW390-21913(J886 TO P15B)H
LDW390-52945(J871 TO P112B)F
LDW390-52670(J851 TO J885)E
LDW390-52675(J887 TO J300)E
LDW390-21779(J28B TO E3021 AT J26A, J26B TO J970, J974)E, (J971)H
LDW390-21874(J1404 TO J870)F
LDW390-28976(J735 TO J950)E
LDW390-21875(J1406 TO J870 & J859)E,F
LDW390-21821(J735 TO J970)H
LDW390-28920(J853 TO J874)E
LDW390-28391(J701 TO J870)B
LDW390-52345(J871 TO P112B)E
LDW390-21792(8L11 TO P71B)E
LDW390-21626(8L25 & 8L26 TO P304B)A
LDW390-21690(J874 TO P217B)E
LDW390-21871(J870 TO P101B)E
LDW390-52855(J871 TO J908B)E
LDW390-21826(J870 TO P83B)E
LDW390-52678(J870 TO P15B)E
LDW390-52882(J886 & J859 TO P101B)E
LDW390-52917(J887 TO J174)B, (8RT4)E, (J887 TO E224, E225, E226)
LDW390-52974(J858 TO P83B)A
LDW390-51918(J859 TO 8L7, 8L8, 8L13, 8L14, 8L21 & 8L22, 8L27, 8L28, J174, E339, E332, E334, E337, E342, E344, E347, E349)E
LDW390-52951(J887 TO P1410B)E
LDW390-52649(7MT-5 TO P9B)C
LDW390-21880(J887 TO P720)C, E4733
LDW390 52882(J857 TO P101B)C, (J887 TO P101B)E
LDW390-52674(J858 TO P35B)A
LDW390-52691(J858 TO P55B)A
LDW390-52787(J886 TO P74B)A
LDW390-21843(J886 TO P74B)A
C1
LDW390-21690(J870 TO P217B)H
LDW390-52691(J886 & J857 TO P55B)H
LDW390-52668(J857 TO P15B)H
LDW390-52674(J857 TO P35B)H, (J870 TO P15B)F
LDW390-52678(J857, J859 TO P15B)H, (J870 TO P15B)F
LDW390-21871(J870 TO P15B & J95)H, (J870 TO J93 & P112B)F
LDW390-51918(J859 TO 7A9, 7A10, 10MT-55, 10MT-42, J208, E943, E944, E947, E948, E680, E683, E684, E679 8MT-9, 8MT-10, 8MT-5 & 8MT-6)H, E220, E221, E227, E128, E191, E192, E198, E199
LDW390-21669(J856 TO J850)H, (J856 TO J852)E, (J856 TO J851)E
LDW390-52882(J857 TO P101B)H
LDW390-52629(P448-E3302, E3305)A-CR3B
LDW390-28958(J703-E3238)A-CR3B
B6
-52649(7MT-6 TO P9B)C
-21626(8L23 TO P304B)A
-21792(8L9 & 8L10 TO P71B)A
LDW390-21976(J735 TO J887, J950, J859)A,B,C,E,H
(PIGTAILS FROM LT.)
LDW390-28607 (E3858 & E4209)A FROM P89B TO 16DS25 DOCKING LIGHT ON HEAT SHIELD. -Z69.656, X287.50
SEE VIEW H-H ZONE 19-C
J26A
J26B
J853
J852
J851
J850
(N4)
LDW390-52201 (1)
GB511J-08-5 (1)
AN960D8 (2)
MS21042L08 (1)
SEE SHT. 6.00 ZONE 18-B
D2
J300
H
(SEE SHT. 6.00)
X271.937 (REF)
TO CLUSTER II (8A4) (SEE SH. 12.00 ZONES 60A, 58C)
E2
SEE SHT. 6.00 ZONE 20-B
SEE SHT. 6.00 ZONE 19-B
E7905
GT11J-BR-08-12
B5
ECA 4
7RT15
C & WEA
PQGS
LDW390-21792(8L12 TO P71B)A, E162
LDW390-21792(8L11 TO P71B)A, E161
8L12 GR4273X
8L11 GR4273X
510782-001 20RT-23
510782-001 20RT-24
510782-001 20RT-27
510782-001 20RT-26
R/R ELEC.
8L25 GR4274X
P1161
LDW390-21881(P1161 TO P1141)D
A-B
C
E
LDW390-51918(J859 TO 8L9, 8L10, 8L23 & 8L24)E
COIL TO TAKE-UP EXTRA LENGTH FROM S.F. CABLES
P1359 GA5601D
P1360 GA5602D
P1361 GA5603D
J871
J872
J870
LDW390-52880(J735 TO 7MT-5M, E1191, E1192)
LDW390-51934(J955 TO CLUSTERS II & III)H
LDW390-21808(J859 TO P75)H
LDW390-21624(8L25 TO P304B)A
E157 & E158 FROM 8L25 & 8L26 TO P304B)A
LDW390-21691(J857 TO P55B)H, (J858 TO P55B)A
LDW390-21918(J857 TO 8L9, 8L10, 8L23 & 8L24)E
LDW390-21976(J735 TO J859)A
LDW390-52855(20RT-26, 20RT-27 20RT-23 & 20RT-24 TO P308B)H (E4641 THRU E4646, E4913 THRU E4916)H
SEE SHT. 6.00 ZONE 18-B
P.C.M. T.E.
BATTERY 5
BATTERY 6
SCEA 2
-Y7.125 (REF)
℄ OF BACK (REF)
-Y2.125 (REF)
-Y4.250 (REF)
-Y2.375 (REF)
LDW390-52014 AREA INSTL
Y2.500 (REF)
LDW390-21925(J1143 TO J870)F
LDW390-52695(J388 TO J870)E
LDW390-21824(J3B TO J870)E
LDW390-21821(J3A TO J870)E
LDW390-52882(J887 TO P101B)E
LDW390-21779(J26B TO J970, J974 & J208)E, (J971)H
LDW390-28976(J736 TO J950)E
LDW390-21828(J735 TO J970)H
SCEA 1
R/R ELEC.
Y35.625 (REF)
X233.562 (REF)
J870
J874
J871
J873
J950
J956
J953
J955
SEE SHT. 6.00 ZONE 18-B
BC
A1
LDW390-21834(REF)
AN960D816
J236
NUT (REF)
VIEW BC-BC
EQUIP RACK
VIEW LKG AFT
SCALE ½
TO 16DS25 DOCKING LIGHT
-Z50.90 (REF)
LDW390-28607 (P89B TO E3858 & E4209)A
X271.937 (REF)
LDW390-21881
-Z65.50 (REF)
VIEW G-G
-Z60.50 (REF)
-Z65.50 (REF)
GB6001T, 20RT-23 & GB6002T, 20RT-24
GB0101T, 20RT-26 & GB0102T, 20RT-27
COAX (REF)
P1161
VIEW F-F

02/02

NAS 9-1100

MANUFACTURING OPERATIONS UNLESS OTHERWISE SPECIFIED NOTES CHECKED √ APPLY TO THIS DWG.	
PART NUMBER AND ALL OTHER MARKINGS IN REGION MARKED USE BOTH SIDES IF NECESSARY.	
FILLET AND INSIDE CORNER RADII TOLERANCES .016R TO .062R ± .010 .063R TO .250R ± .015 OVER .250R ± .030	
DEPTH SHOWN FOR TAPPED HOLES IS FULL THDS. 2-3 IMP THDS. BEYOND PERMISSIBLE.	
EXTERNAL THREAD LENGTH SHOWN INCLUDES 2 IMPERFECT THREADS MAX.	
DO NOT CADMIUM PLATE & PAINT HOLES OR SURFACES MARKED WITH DOUBLE ASTERISK.	
MISMATCH STEP OF ± .005 PERMISSIBLE DUE TO CHANGE OF CUTTERS AT INSIDE INTERSECTING SURFACES.	
DIAMETERS MARKED MUST BE CONCENTRIC WITHIN FULL INDICATOR READING	
HOLES MUST BE KEPT FREE OF CHROME PLATING SOLUTION.	
ALL DIMENSIONS SHOWN TO BE MET AFTER CADMIUM PLATING. THICKNESS OF PLATE .0003 MIN. TO .0005 MAX. MIN. THICKNESS TO BE .0002 ON THREADED AREAS. NO ALLOWANCE FOR PLATING IN HOLES	
125 SURFACE ROUGHNESS INCLUDING REAMED HOLES PER MIL-STD-10	
200 FOR ALL DRILLED HOLES	
REMOVE ALL BURRS. BREAK ALL EDGES .015-.031	
INSPECTION INFORMATION MINIMUM PERMISSIBLE AVERAGE EDGE DISTANCE MARKED IS	
SYMBOL √ DENOTES SURFACE TO BE MACHINED	
UNLESS OTHERWISE SPECIFIED TOLERANCE ON FLANGES IS ± 1/32	
LENGTHS OF AN, NAS & MS AL ALY RIVETS SHORTER THAN 1 INCH ARE NOT SPECIFIED.	
TOLERANCE ON LOFTED DELINEATIONS IS	

ELECTRONIC CABLING INSTALLATION
LOOKING AFT. AT AFT. BAY EQUIP RACK
VIEW F-F TO K-K

(TO BE REDRAWN ON PRODUCTION FORMAT)

LEM 2 (32)	GRUMMAN AIRCRAFT ENGRG CORP., BETHPAGE, L. I., NEW YORK			
	SIZE J	CODE IDENT No 26512	LDW 280-57360	C
MODEL OR END ITEM	SCALE HALF		SHEET 20	

1 THIS IS AN ORIGINAL

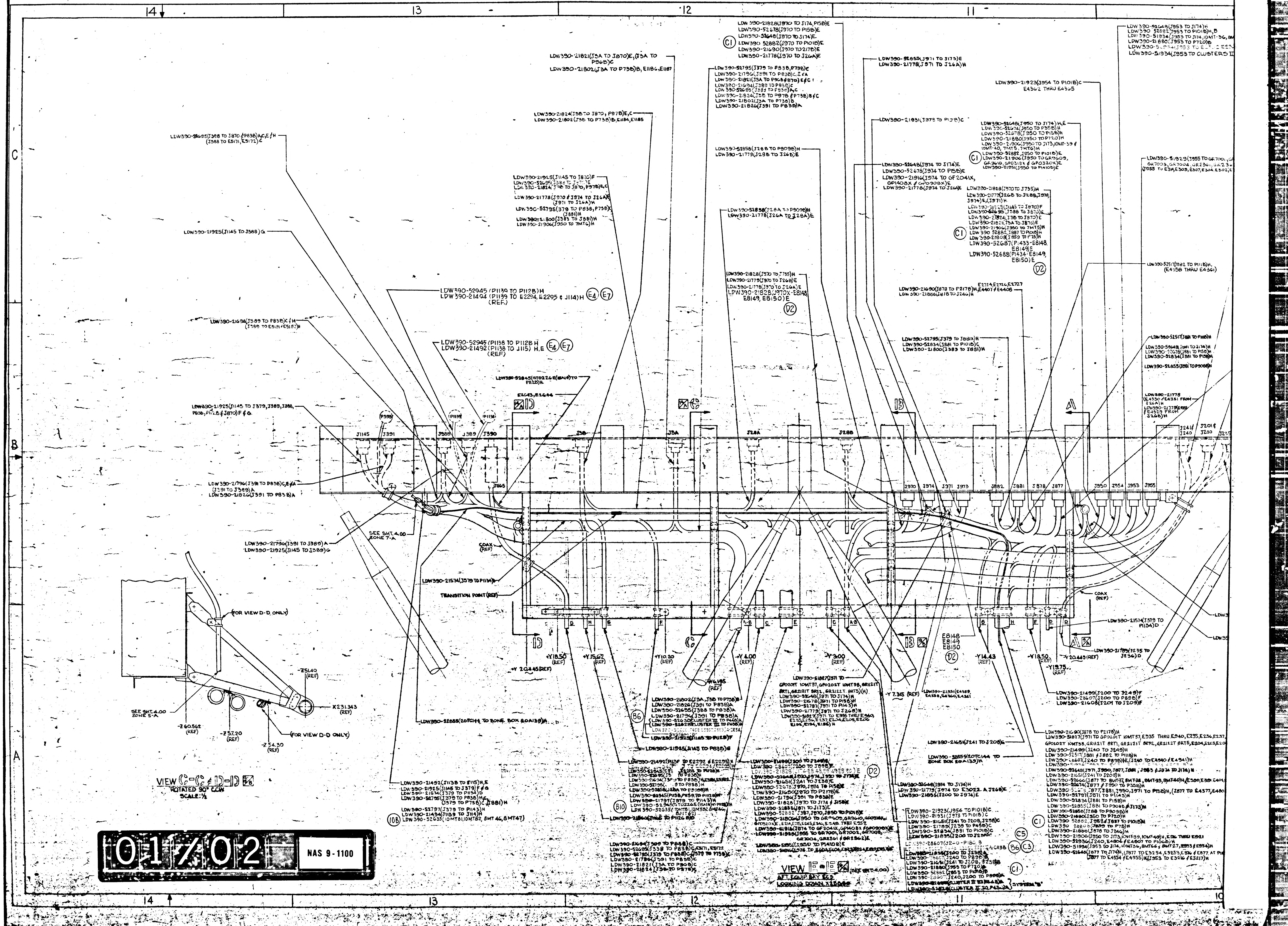
14
13
12
11
10
C
B
A
LDW390-52695(J388 TO J870 & P83B)A,C,E & H (J388 TO E5171, E5172)C
LDW390-21925(J1145 TO J388)G
LDW390-21694(J389 TO P83B)C & H (J389 TO E5181 & E5182)H
LDW390-21925(J1145 TO J379, J389, J388, P83B, P112B & J870)F & G.
LDW390-21796(J391 TO P83B)C,E & A (J391 TO J389)A
LDW390-21826(J391 TO P83B)A
LDW390-21796(J391 TO J389)A
LDW390-21925(J1145 TO J389)G
LDW390-21821(J3A TO J870)E, (J3A TO P96B)C
LDW390-21802(J3A TO P73B)B, E1186, E1187
LDW390-21824(J3B TO J870, P97B)E,C
LDW390-21802(J3B TO P73B)B, E1184, E1185
LDW390-21925(J1145 TO J870)F
LDW390-52695(J388 TO J870)E
LDW390-21824(J3B TO J870, P97B)E,C
LDW390-21778(J970 & J974 TO J26A)E (J971 TO J26A)H
LDW390-52795(379 TO P83B, P73B)C (J881)H
LDW390-21800(J383 TO J881)H
LDW390-21906(J950 TO 7MT6)H
LDW390-52945 (P1139 TO P112B)H
LDW390-21494 (P1139 TO E2294, E2295 & J114)H (REF.)
E4
E7
LDW390-52945 (P1138 TO P112B H
LDW390-21492 (P1138 TO J115) H,E (REF)
LDW390-52945(GT0226E(15A14) TO P112B)H
E2643, E2644
LDW390-21828(J970 TO J174, P15B)E
LDW390-52678(J970 TO P15B)E
LDW390-52648(J970 TO J174)E
LDW390 52882(J970 TO P101B)E
LDW390-21690(J970 TO 217B)E
LDW390-21778(J970 TO J26A)E
C1
LDW390-52795(J379 TO P83B, P73B)C
LDW390-21796(J391 TO P83B)C,E & A
LDW390-21821(J3A TO P96B & J870)E & C
LDW390-21694(J389 TO P83B)C
LDW390-52695(J388 TO P83B)A,C
LDW390-21824(J3B TO P97B & P73B)B & C
LDW390-21802(J3A TO P73B)B
LDW390-21826(J391 TO P83B)A
LDW390-52858(J28B TO P909B)H
LDW390-21779(J28B TO J26B)E
LDW390-52858(J28A TO P909B)H
LDW390-21778(J26A TO J28A)E
LDW390-21828(J970 TO J735)H
LDW390-21779(J970 TO J26B)E
LDW390-21778(J970 TO J26A)E
LDW390-21828(J970X-E8148 E8149, E8150)E
D2
LDW390-52655(J971 TO J173)E
LDW390-21778(J971 TO J26A)H
LDW390-21931(J973 TO P101B)C
LDW390-52648(J974 TO J174)E
LDW390-52678(J974 TO P15B)E
LDW390-21916(J974 TO GF2041X, GP1408X & GP0908X)E
LDW390-21778(J974 TO J26A)E
LDW390-21923(J954 TO P101B)C E4362 THRU E4365
LDW390-52648(J950 TO J174)H,E
LDW390-52674(J950 TO P35B)H
LDW390-52678(J950 TO P15B)H
LDW390-21880(J950 TO P720)H
LDW390-21906(J950 TO J173, 10MT-39 & 10MT-40, 7MT5, 7MT6)H
LDW390-52882(J950 TO P101B)E
LDW390-21906(J950 TO GR9609, GR9610, GP0319X & GP0320X)E
LDW390-21951(J950 TO P1410B)E
C1
LDW390-21828(J970 TO J735)H
LDW390-21779(J26B TO J28B, J970, J974)E, (J971)H
LDW390-21925(J1145 TO J870)F
LDW390-52695(J388 TO J870)E
LDW390-21824(J3B TO J870)E
LDW390-21821(J3A TO J870)E
LDW390-21906(J950 TO 7MT5)H
LDW390 52882(J887 TO P101B)H
LDW390-21808(J859 TO P75)H
LDW390-52687(P1433-E8148, E8149)E
LDW390-52688(P1434-E8149, E8150)E
C1
D2
LDW390-52648(J953 TO J174)H
LDW390 52882(J953 TO P101B)H,B
LDW390-51934(J953 TO J174, 10MT-36, 8M
LDW390-21880(J953 TO P720)B
LDW390-51934(J953 TO CLUSTERS II
LDW390-51929(J955 TO GR7001, GR7003, GR7004, GR2361, GR236 (J955 TO E314, E309, E307, E304, E302, E
LDW390-52517(J882 TO P111B)H, (E4358 THRU E4361)
LDW390-21690(J878 TO P217B)H, E2724, E2726, E2727, E4407 & E4408
LDW390-21888(J878 TO J246)H
LDW390-52795(J379 TO J881)H
LDW390-52834(J881 TO P101B)H
LDW390-21800(J383 TO J881)H
LDW390-52517(J881 TO P111B)H
LDW390-52648(J881 TO J174)H
LDW390-52678(J881 TO P15B)H
LDW390-52834(J881 TO P15B)H
LDW390-52855(J881 TO P908B)H
LDW390-21778 (E4330 & E4331 FROM J26A)H
LDW390-21779(E4328 & E4329 FROM J26B)H
P393
P1139
P1138
J1145
J391
J388
J389
J390
J1165
J3B
J3A
J28A
J28B
J970
J974
J971
J973
J882
J881
J878
J877
J950
J954
J953
J955
J241 & J240
J201 & J200
J235
A
B
C
D
SEE SHT. 4.00 ZONE 7-A
COAX (REF)
LDW390-21574(J379 TO P1134)D
TRANSITION POINT (REF)
D
H
E
F
A-B
C
E
A-B
G
D
E8148
E8149
E8150
D2
+Y 20.445 (REF)
+Y18.50 (REF)
+Y15.67 (REF)
+Y10.20 (REF)
+Y 4.00 (REF)
-Y 3.00 (REF)
-Y 6.195 (REF)
-Y 7.315 (REF)
-Y14.43 (REF)
-Y18.50 (REF)
-Y19.75 (REF)
-Y 20.445 (REF)
LDW390-21574(J379 TO P1134)D
LDW390-21789(J235 TO J236)D
LDW390-51827(J971 TO GP0201T 10MT37, GP0202T 10MT38, GR1121T 8RT1, GR2121T 8RT2, GR2122T 8RT5)(H)
LDW390-52648(J971 TO J174)H
LDW390-21678(J971 TO P15B)H
LDW390-52797(J971 TO P1143)H
LDW390-21779(J971 TO J26B)H
LDW390-51827(J971 TO E935 THRU E940, E235, E236, E237, E204, E205, E206 E192, E194, E186)H
LDW390-21931(E4359, E4358, E4360, E4361
LDW390-21499(J200 TO J249)F
LDW390-28607(J200 TO P89B)F
LDW390-21608(J201 TO J209)F
FOR VIEW D-D ONLY
FOR VIEW D-D ONLY
-Z51.40 (REF)
X231.343 (REF)
SEE SHT. 4.00 ZONE 5-A
-Z60.562 (REF)
-Z57.20 (REF)
-Z54.30 (REF)
LDW390-52855(20TC144 TO ZONE BOX 20A139)H
LDW390-21802(J3A, J3B TO P73B)B
LDW390-21826(J391 TO P83B)A
LDW390-52695(J388 TO P83B)A
LDW390-21796(J391 TO P83B)A
LDW390-52630(CLUSTER III TO P44B)A
LDW390-52628(CLUSTER III TO P43B)A
SYSTEM "B"
B6
LDW390-21925(J1145 TO P112B)F
LDW390-21925(J1145 TO P83B)G
LDW390-21492(P1138 TO E2292 & E2293)H
LDW390-21494(P1139 TO E2294 / E2295)H
LDW390-52945(E2203 TO P112B)H
LDW390-52695(J388 TO P83B)H
LDW390-21694(J389 TO P83B)H, E5181, E5182
LDW390-52795(J379 TO P83B)H
LDW390-52858(J28A TO P909B)H
LDW390-52945(P1138, P1139 TO P112B)H
LDW390-21797(J379 TO P1143)H
LDW390-52945(GT0226E(15A14) TO P112B)H
LDW390-52635(10MT81, 10MT82, 8MT46, 8MT47)
B10
LDW390-21866(J1165 TO P1126 B)B
LDW390-21499(J200 TO J249)E
LDW390 28607(J200 TO J89B)E
LDW390-21828(J174-E8148, E8149, E8150)E
LDW390-52648(J970, J974, J950 TO J174)E
LDW390-21651(J241 TO J238)E
LDW390-52678(J970, J974 TO P15B)E
LDW390-21690(J970 TO P217B)E
LDW390-21796(J391 TO P83B)E
LDW390-21828(J970 TO J174 & J15B)E
LDW390-52855(J971 TO J173)E
LDW390-52882 J387, J970, J950 TO P101B)E
LDW390-21906(J950 TO GR9609, GR9610, GP0319X, GP0320X)E, E214, E215, E245, E246, E248 THRU E252
LDW390-21916(J974 TO GF2041X, GP1408X & GP0908X)E
LDW390-51929(J955 TO GR7001, GR7002, GR7003, GR7004, GR2361 & GR2362)E
LDW390-21951(J950 TO P1410B)E
D2
LDW390-21694(J389 TO P83B)C
LDW390-52695(J338 TO P83B)C, E5171, E5172
LDW390-52795(J379 TO P83B)C, (J379 TO P73B)C
LDW390-21796(J391 TO P83B)C
LDW390-21821(J3A TO P96B)C
LDW390-21824(J3B TO P97B)C
LDW390-21492(J1138 TO J115)H,E
LDW390-21925(J1145 TO J379)F & G
LDW390-21574(J379 TO P1134)D
LDW390-52795(J379 TO P83B)H,G, (J379 TO P73B)C, (J881)H
LDW390-52797(J379 TO P1143)H
LDW390-21494(J1139 TO J114)H
LDW390-52635(10MT81, 10MT82, 8MT46, 8MT47)
10B
LDW390-21651(J241 TO J208)G
LDW390-52855(20TC144 TO ZONE BOX 20A139)H
LDW390-52648(J974 TO J174)H
LDW390-21779(J974 TO E3022 & J26B)E
LDW390-21835(J200 TO J974)E
LDW390-21923(J954 TO P101B)C
LDW390-21931(J973 TO P101B)C
LDW390-21651(J241 TO J208, J238)C
LDW390-21789(J239 TO P45B)C
LDW390-52834(J881 TO P101B)C
LDW390-21835(J200 TO J238)C
LDW390-28607(J240-P180 B
C5
B6
C3
LDW390-21835(J200 TO J238)A
LDW390-28607(J240 TO P89B)B
LDW390-21651(J241 TO J208, J238)B
LDW390-21880(J953 TO P720)B
LDW390-52882(J953 TO P101B)B
LDW390-28607(J240, J200 TO P89B)A
LDW390-52630(CLUSTER II TO P44B)A
LDW390-52628(CLUSTER II TO P43B)A
SYSTEM "B"
C1
LDW390-21690(J878 TO P217B)H
LDW390-51827(J971 TO GP0201T 10MT37, E935 THRU E940, E235, E236, E237, GP0202T 10MT38, GR1121T 8RT1, GR2121T 8RT2, GR2122T 8RT5, E204, E205, E20
LDW390-21499(J240 TO J249)H
LDW390-52517(J881 & J882 TO P111B)H
LDW390-28607(J240 TO P89B)H, (J240 TO E4940 & E4941)H
LDW390-51934
LDW390-52648(J971, J950, J877, J881, J953 & J974 TO J174)H
LDW390-21651(J241 TO J208)H
LDW390-52666(J877 TO 8MT37, 8MT38, 8MT39, 8MT40)H, (E390, E391, E401,
LDW390-52674(J877 & J950 TO P35B)H
LDW390-52678(J877, J881, J950, J971 TO P15B)H, (J877 TO E4377, E480
LDW390-52797(J971 TO P1143)H
LDW390-52834(J881 TO P15B)H
LDW390-52855(J881 TO P908B & J173)H
LDW390-52858(J288 TO P909B)H
LDW390-21880(J950 TO P720)H
LDW390 52882(J953 & J887 TO P101B)H
LDW390 28808(J859 TO P75)H
LDW390-21888(J878 TO J246)H
LDW390-21906(J950 TO J173, 10MT-39, 10MT-40)H, E916 THRU E921
LDW390-52936(J240, E4806 & E4807 TO P106B)H
LDW390-51934(J953 TO J174, 10MT36, 8MT66 & 8MT27, E953 & E954)H
LDW390-52648(J877 TO J174)H, (J877 TO E3254, E3253, E876 & E877 AT P
(J877 TO E4354 & E4355)H, (J953 TO E3216 & E3217)H
C1
9/A
9/B
9/A
9/A
9/A

VIEW C-C & D-D 9/B
ROTATED 90° CCW
SCALE: ½

VIEW E-E 9/A (SEE SHT 4.00)
AFT. EQUIP. BAY E&D
LOOKING DOWN X250.00

01/02

NAS 9-1100

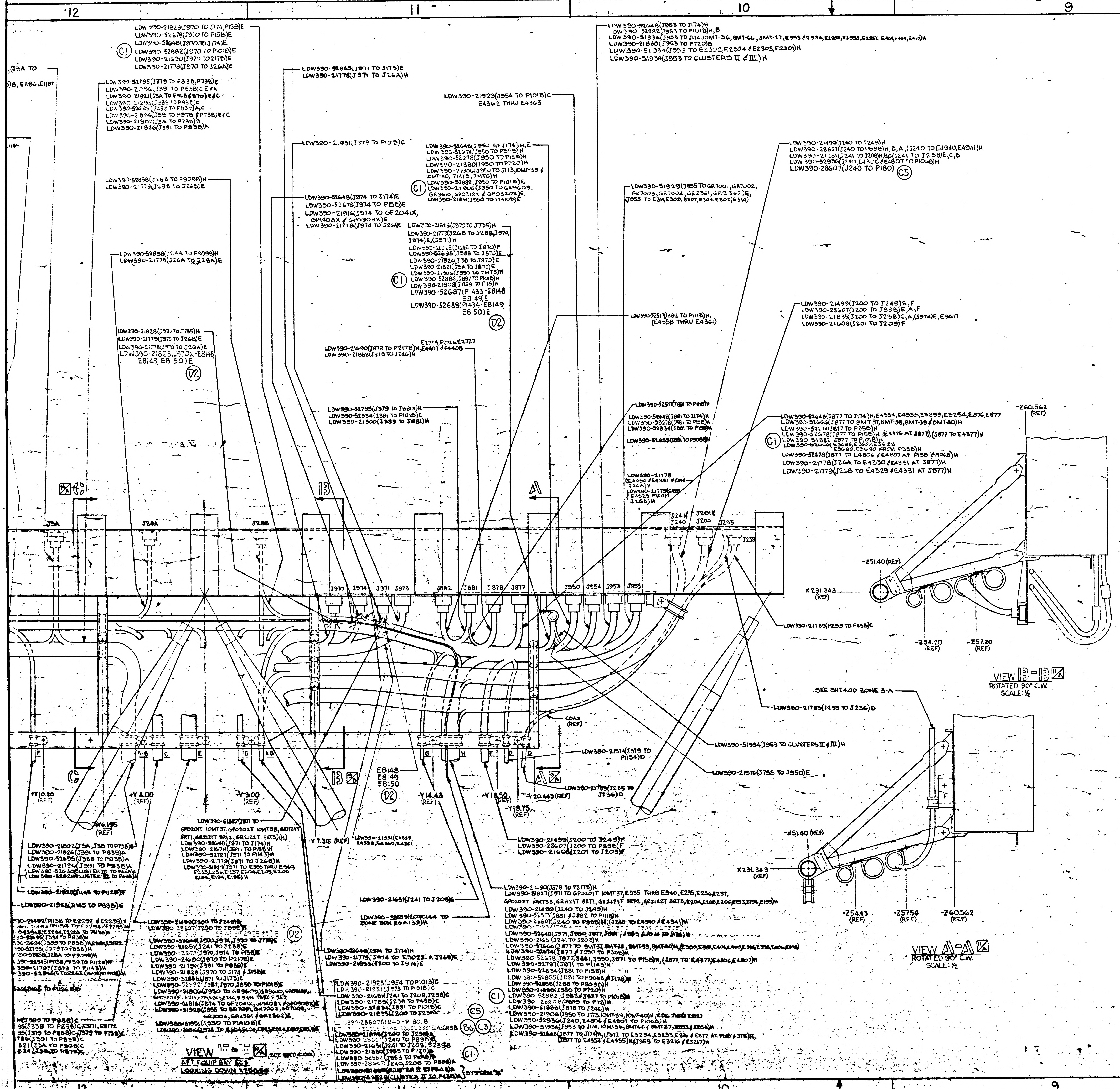
12
11
10
9
8
VIEW B-B
ROTATED 90° C.W.
SCALE: ½
VIEW A-A
ROTATED 90° C.W.
SCALE: ½
VIEW E-E
AFT. EQUIP BAY ECS
LOOKING DOWN X238.50
SEE SHT.4.00 ZONE 3-A
J3A
J28A
J28B
J970
J974
J971
J973
J882
J881
J878
J877
J950
J954
J953
J955
J241
J240
J201
J200
J235
J239
COAX (REF)
-Z60.562 (REF)
-Z51.40 (REF)
X231.343 (REF)
-Z54.20 (REF)
-Z57.20 (REF)
-Z51.40 (REF)
X231.343
-Z54.43 (REF)
-Z57.56 (REF)
-Z60.562 (REF)
-Y10.20 (REF)
-Y4.00 (REF)
-Y3.00 (REF)
-Y14.43
-Y18.50
-Y20.443 (REF)
-Y19.75 (REF)
-Y7.315 (REF)
-Y6.195 (REF)
E8148
E8149
E8150
LDW390-21499(J240 TO J249)H,B,A,(J240 TO E4940,E4941)H
LDW390-28607(J240 TO P180)
LDW390-21499(J200 TO J249)E,F
LDW390-21783(J235 TO J236)D
LDW390-51934(J953 TO CLUSTERS II & III)H
LDW390-21576(J735 TO J950)E
LDW390-21789(P239 TO P458)C
LDW390-21499(J200 TO J249)F
LDW390-21607(J200 TO P838)E
LDW390-21608(J201 TO J209)F
LDW390-21923(J954 TO P101B)C
E4362 THRU E4365
C1
C5
D2
B6
C3

MANUFACTURING OPERATIONS

UNLESS OTHERWISE SPECIFIED
NOTES CHECKED √ APPLY TO THIS DWG.

PART NUMBER AND ALL OTHER MARKINGS IN REGION MARKED ⊠ USE BOTH SIDES IF NECESSARY.	
FILLET AND INSIDE CORNER RADII TOLERANCES .016R TO .062R ± .010 .063R TO .250R ± .015 OVER .250R ± .030	
DEPTH SHOWN FOR TAPPED HOLES IS FULL THDS. 2-3 IMP THDS. BEYOND PERMISSIBLE.	
EXTERNAL THREAD LENGTH SHOWN INCLUDES 2 IMPERFECT THREADS MAX.	
DO NOT CADMIUM PLATE & PAINT HOLES OR SURFACES MARKED WITH DOUBLE ASTERISK.	
MISMATCH STEP OF ± .005 PERMISSIBLE DUE TO CHANGE OF CUTTERS AT INSIDE INTERSECTING SURFACES.	
DIAMETERS MARKED MUST BE CONCENTRIC WITHIN FULL INDICATOR READING	
HOLES MUST BE KEPT FREE OF CHROME PLATING SOLUTION.	
ALL DIMENSIONS SHOWN TO BE MET AFTER CADMIUM PLATING. THICKNESS OF PLATE .0003 MIN. TO .0005 MAX. MIN. THICKNESS TO BE .0002 ON THREADED AREAS. NO ALLOWANCE FOR PLATING IN HOLES	
125 SURFACE ROUGHNESS INCLUDING REAMED HOLES PER MIL-STD-10	
200 FOR ALL DRILLED HOLES	
REMOVE ALL BURRS. BREAK ALL EDGES .015-.031	
INSPECTION INFORMATION MINIMUM PERMISSIBLE AVERAGE EDGE DISTANCE MARKED IS	
SYMBOL √ DENOTES SURFACE TO BE MACHINED	
UNLESS OTHERWISE SPECIFIED TOLERANCE ON FLANGES IS ± 1/32	
LENGTHS OF AN, NAS & MS AL ALY RIVETS SHORTER THAN 1 INCH ARE NOT SPECIFIED.	
TOLERANCE ON LOFTED DELINEATIONS IS	

DWG SIZE 34 X 76

02/02 NAS 9-1100

ELECTRONIC CABLING INSTALLATION

LOOKING DOWN AT +X 238.50 AFT. EQUIP. BAY ECS

VIEW A-A TO E-E

(TO BE REDRAWN ON PRODUCTION FORMAT

LEM 2 (32)	GRUMMAN AIRCRAFT ENGRG CORP., BETHPAGE, L. I., NEW YORK			
	SIZE J	CODE IDENT NO. 26512	LDW280-52360	E
MODEL OR END ITEM	SCALE HALF		SHEET 5	

THIS IS AN ORIGINAL DWG

LDW280-52360 E

41

39

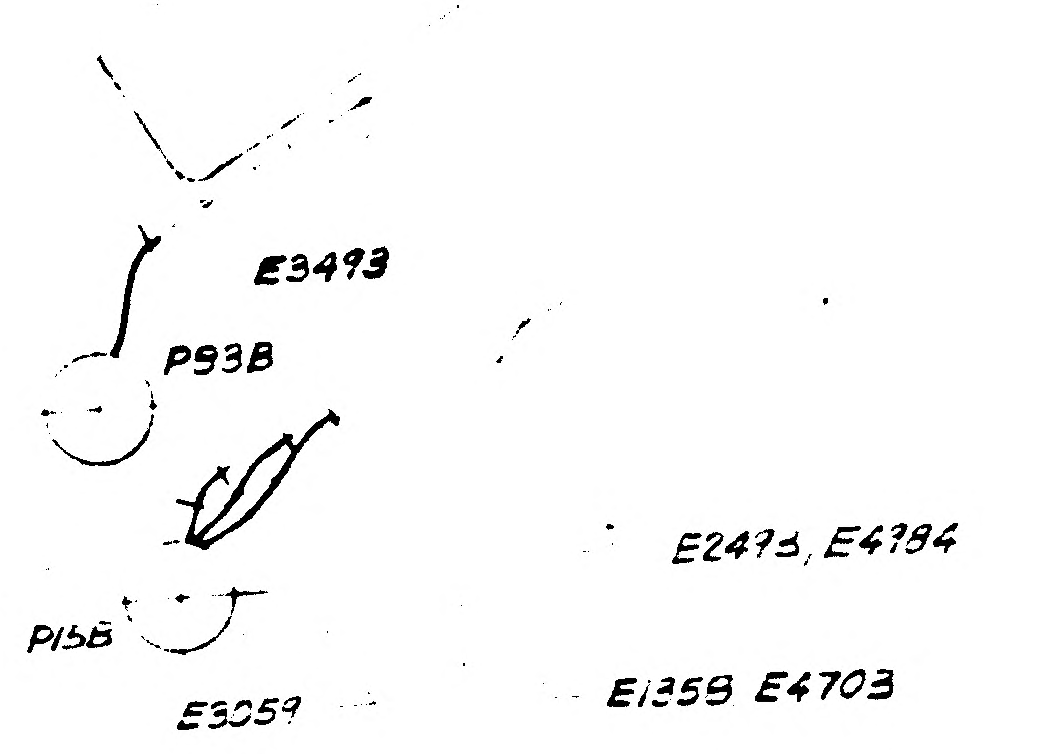

E3493
P93B
E2473, E4794
P15B
E3059
E1358 E4703

GROUND LOCATIONS - UP RH BHD PLUGS

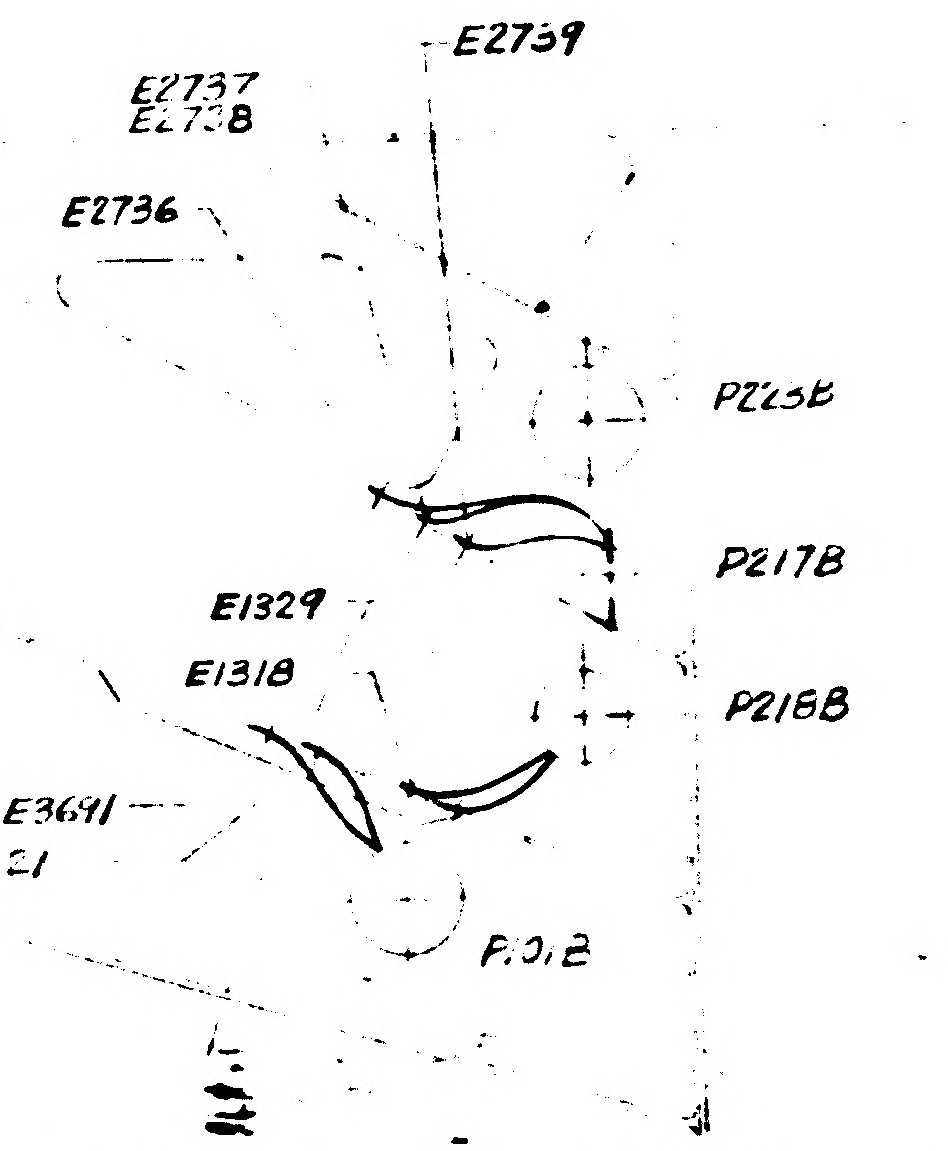

E2739
E2737
E2738
E2736
P223B
P217B
E1329
E1318
P218B
E3113, E3691
E3120, E3121
P101B

GROUND LOCATIONS - UP LH BHD PLUGS

B

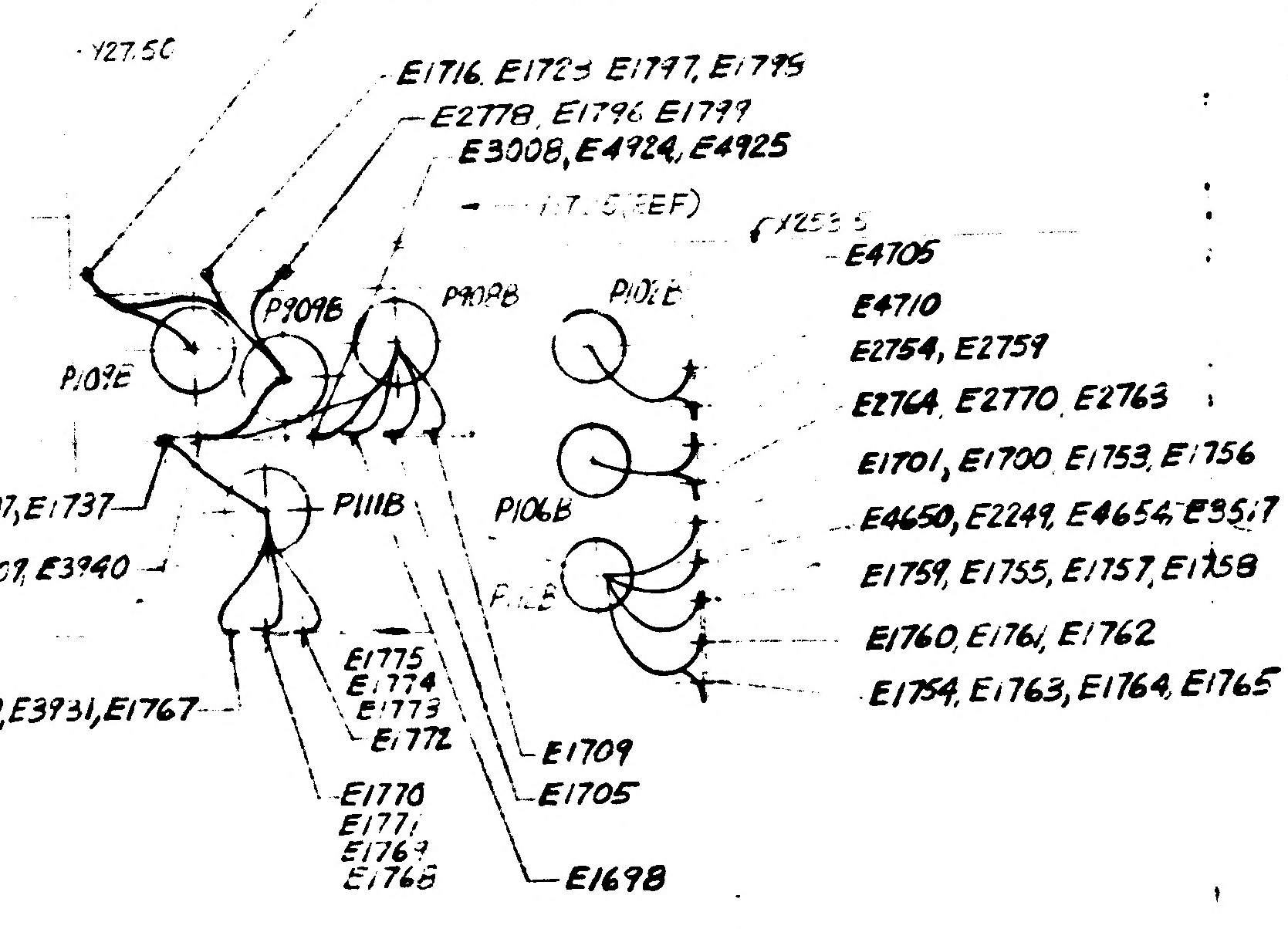

E254, E1713, E1714, E1715
Y27.50
E1716, E1723, E1797, E1795
E2778, E1796, E1799
E3008, E4924, E4925
X253.5
E4705
P109E
P909B
P908B
P102B
E4710
E2754, E2759
E2764, E2770, E2763
E1701, E1700, E1753, E1756
E1801, E4207, E1737
P111B
P106B
E4650, E2249, E4654, E3517
E1607, E3940
E1759, E1755, E1757, E1758
E1760, E1761, E1762
E4208, E3931, E1767
E1775
E1774
E1773
E1772
E1754, E1763, E1764, E1765
E1709
E1770
E1771
E1769
E1768
E1705
E1698

GROUND LOCATIONS - LWR LH BHD PLUGS

A

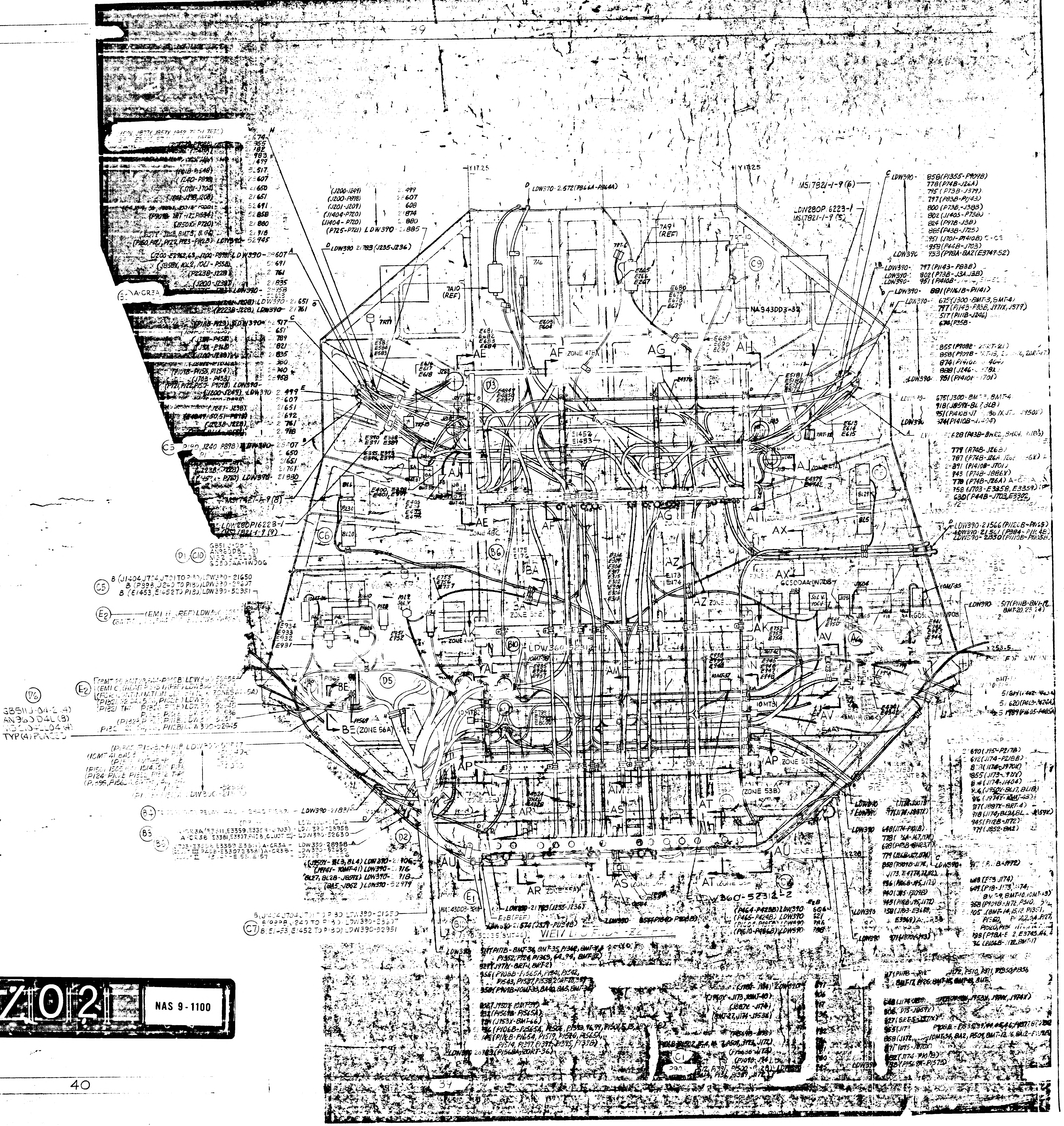

Y17.25
LDW390
A-CR3A
7A10 (REF)
7A9 (REF)
C9
C5
C6
C10
D1
B6
D3
D5
D6
E2
B3
B4
D2
C7
C4
E1
AE
AF
AG
AH
AJ
AK
AL
AM
AN
AP
AR
AS
AT
AU
AV
AW
AX
AZ
BA
BE
ZONE 47E
ZONE 48C
ZONE 52B
ZONE 53B
ZONE 56A
NA943DD3-32
MS17821-1-9 (8)
LDW280P 6223-1
GB511J-04-2 (4)
AN960D4L (8)
TYP (4) PLACES
LDW390-21566 (P1128-P1445)
LDW390-21561 (P384-P11148)
LDW360-52312-2

01Z02

NAS 9-1100

41

40

39

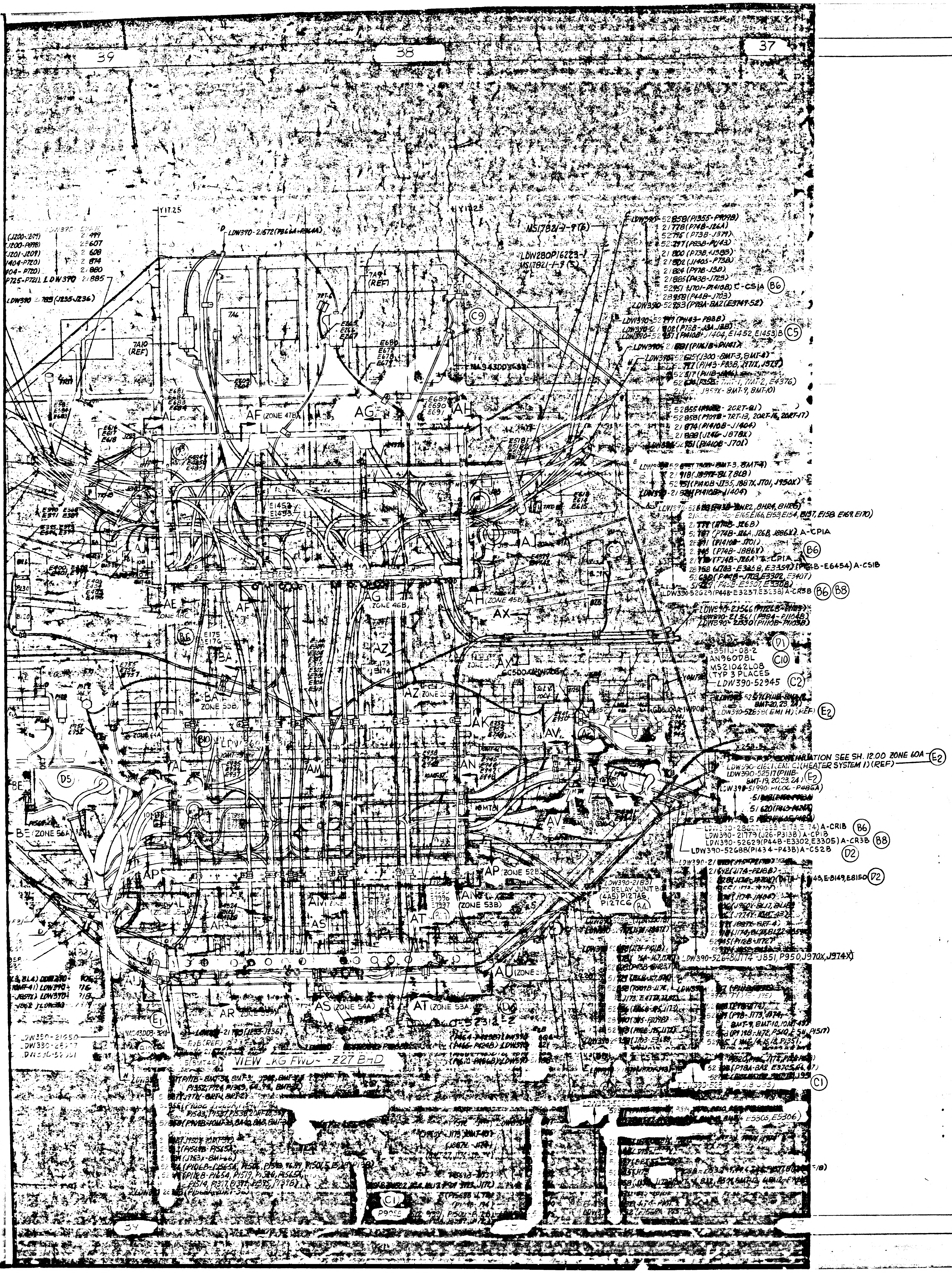
39
38
37
36
Y117.25
LDW390-21672(P1366A-P1264A)
MS17821-9(T6)
LDW280P16223-1
MS17821-9(C3)
7A10 (REF)
7A9 (REF)
7A6
MA343003-83
AF (ZONE 47B)
AG
AH
AE
AG (ZONE 46B)
AH (ZONE 45B)
AX
AZ
AP
AK
AV
AM
AN
BA
ZONE 55B
BE (ZONE 56A)
AR
AS (ZONE 54A)
AT (ZONE 53A)
AU
AN (ZONE 53B)
AP (ZONE 52B)
AN960D8L
MS21042L08
(TYP 3 PLACES
LDW390-52945
CONTINUATION SEE SH. 12.00 ZONE 60A
(HEATER SYSTEM 1) (REF)
LDW390-52517(P111B-
BMT-19,20,23,24)
LDW390-21779(J26-P313B) A-CP1B
LDW390-52629(P44B-E3302,E3305) A-CR3B
LDW390-52688(P1434-P43B) A-CS2B
LDW390-52629(P44B-E3237,E3238) A-CR3B
LDW390-52600(J172-J851,P950,J970X,J974X)
LDW390-21831
RELAY JUNT B
(4A5) P127A6
P127C6
VIEW LKG FWD - Z27 B-D
B6
B8
C5
C9
C10
C2
C1
D1
D2
D5
E1
E2
E2
36
35

MANUFACTURING OPERATIONS
UNLESS OTHERWISE SPECIFIED
NOTES CHECKED √ APPLY TO THIS DWG.

PART NUMBER AND ALL OTHER MARKINGS IN REGION MARKED ⊠ USE BOTH SIDES IF NECESSARY.

FILLET AND INSIDE CORNER RADII TOLERANCES
.016R TO .062R ± .010
.063R TO .250R ± .015
OVER .250R ± .030

DEPTH SHOWN FOR TAPPED HOLES IS FULL THDS. 2-3 IMP THDS. BEYOND PERMISSIBLE.

EXTERNAL THREAD LENGTH SHOWN INCLUDES 2 IMPERFECT THREADS MAX.

DO NOT CADMIUM PLATE & PAINT HOLES OR SURFACES MARKED WITH DOUBLE ASTERISK.

MISMATCH STEP OF ± .005 PERMISSIBLE DUE TO CHANGE OF CUTTERS AT INSIDE INTERSECTING SURFACES.

DIAMETERS MARKED - MUST BE CONCENTRIC WITHIN FULL INDICATOR READING

HOLES MUST BE KEPT FREE OF CHROME PLATING SOLUTION.

ALL DIMENSIONS SHOWN TO BE MET AFTER CADMIUM PLATING. THICKNESS OF PLATE .0003 MIN. TO .0005 MAX. MIN. THICKNESS TO BE .0002 ON THREADED AREAS. NO ALLOWANCE FOR PLATING IN HOLES

125 √ SURFACE ROUGHNESS INCLUDING REAMED HOLES PER MIL-STD-10

200 √ FOR ALL DRILLED HOLES

REMOVE ALL BURRS. BREAK ALL EDGES .015-.031

INSPECTION INFORMATION MINIMUM PERMISSIBLE AVERAGE EDGE DISTANCE MARKED IS

SYMBOL √ DENOTES SURFACE TO BE MACHINED

UNLESS OTHERWISE SPECIFIED TOLERANCE ON FLANGES IS ± 1/32

LENGTHS OF AN, NAS & MS AL ALY RIVETS SHORTER THAN 1 INCH ARE NOT SPECIFIED.

TOLERANCE ON LOFTED DELINEATIONS IS

DWG SIZE 34 X 7?

PRINTING INFO ONLY

B

A

02/02 NAS 9-1100

LDW28C-5236C

ELECTRONIC CABLE INSTALLATION
AFT EQUIP BAY - Z27 BHD
VIEW LKG FWD - Z27.0

LEM-2	GRUMMAN AIRCRAFT ENGRG CORP., BETHPAGE, L. I., NEW YORK			
	SIZE J	CODE IDENT NO. 26512	LDW280-52360	3
MODEL OR END ITEM	SCALE NONE		SHEET 9.00	

35 THIS IS AN ORIGINAL DLK

36

E. SALAGE
X6566
~~7-28-66~~ 8-1-66
~~9-4-66~~

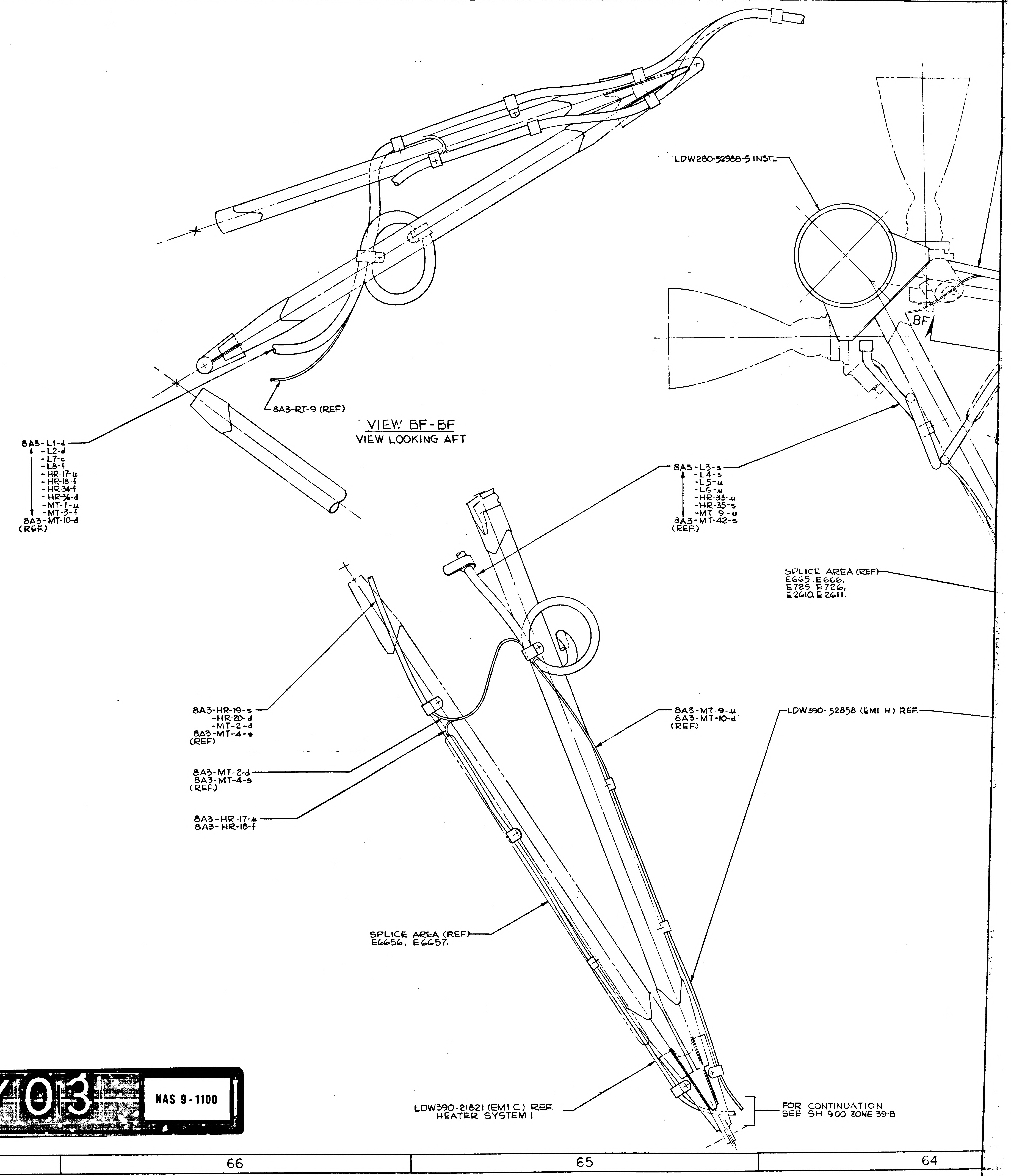
8A3-L1-d
-L2-d
-L7-c
-L8-f
-HR-17-u
-HR-18-f
-HR-34-f
-HR-36-d
-MT-1-u
-MT-3-f
8A3-MT-10-d
(REF.)
8A3-RT-9 (REF.)
LDW280-52988-5 INSTL
BF
8A3-L3-s
-L4-s
-L5-u
-L6-u
-HR-33-u
-HR-35-s
-MT-9-u
8A3-MT-42-s
(REF.)
SPLICE AREA (REF)
E665, E666,
E725, E726,
E2610, E2611.
8A3-HR-19-s
-HR-20-d
-MT-2-d
8A3-MT-4-s
(REF)
8A3-MT-2-d
8A3-MT-4-s
(REF.)
8A3-HR-17-u
8A3-HR-18-f
8A3-MT-9-u
8A3-MT-10-d
(REF.)
LDW390-52858 (EMI H) REF.
SPLICE AREA (REF)
E6656, E6657.
LDW390-21821 (EMI C) REF.
HEATER SYSTEM I
FOR CONTINUATION
SEE SH. 9.00 ZONE 39-B

VIEW BF-BF
VIEW LOOKING AFT

68
67
66
65
64
C
B
A

01/03

NAS 9-1100

64
63
62
61
60
-5 INSTL
8A3-L1-d
-L2-d
-L7-f
-L8-f
-HR-17-u
-HR-18-f
-HR-34-f
-HR-36d
-MT-1-u
-MT-3-f
MT-10-d
8A3- RT-9
(REF)
8A3-HR-17-u
8A3-HR-19-f
8A3-MT-10-d
(REF.)
SPLICE AREA (REF.)
E3309, E3392, E3395, E3398,
E3407, E3410, E3411, E5339,
E5340, E2544, E2545, E2548,
E2549, E510, E511, E512.
8A3-HR-34-f
8A3-HR-36-d
(REF)
LDW390-28958 (EMI A) REF.
-52360 (EMI A, ACR3B) REF.
-52628 (EMI A)
LDW390-52979 (EMI E)
LDW390-51934 (EMI H)
+Y35.625 (REF.)
FOR CONTINUATION
SEE SH. 4.00 ZONE 6C
Z 60.5 (REF)
BF
BF
LDW390-28958 (EMI A) REF.
-52630 (EMI A, A-CR3A) REF.
-52628 (EMI A) REF.
-21824 (EMI C) REF (HTR. SYS. 2)
LDW390-52979 (EMI E) REF.
LDW360-28252 INSTL (REF)
8MT 21 (GR4424T) (REF)
LDW360-28252 INSTL (REF)
8MT 22 (GR4423T) (REF)
SPLICE AREA (REF)
E3307, E3308, E3387, E3388,
E3401, E3403, E3406, E5345,
E5346, E6690, E6691,
E2546, E2550, E2551, E2554
SPLICE AREA (REF)
E665, E666,
E725, E726,
E2610, E2611.
SPLICE AREA (REF)
E2590, E2591, E2592,
E2626, E2627, E2628.
LDW390-52858 (EMI H) (REF.)
LDW390-52858 (EMI H) REF.
FOR CONTINUATION
SEE SH 9.00 ZONE 39-B
FOR CONTINUATION
SEE SH. 6.00 ZONE 3-C
BG
BG
8A4-RT-8 (REF)
LDW390-28958 (EMI A)
-52628 (EMI A)
-52629 (EMI A, ACR-3B)
-52679 (EMI E)
LDW390-51934 (EMI H)
(SYS. B) (REF)
LDW390-28958 (EMI A)
-52628 (EMI H)
-52629 (EMI A-CR3A)
LDW390-21824 (EMI C)(HEATER SYS. 2)
(SYS. A) (REF.)
SPLICE AREA (REF)
E3299, E3300, E3418, E3419
E3427, E3431, E3436, E3437
E5348, E6686, E6687.
LDW280-52988-3 INSTL.
LDW360-28252 INSTL
(REF.)
8MT25 (GR4326T)
8A4-L3-s
-L4-s
-MT-1-u
-MT-9-u
-HR-13-d
8A4-HR-15-f
(REF.)(SYS. B.)
8A4-L1-d
-L2-d
-HR-29-d
8A4-HR-30-s
(REF.)(SYS. A)
8A4-MT-9-u
8A4-MT-10-d
(REF)
SPLICE AREA (REF)
E629, E630, E668, E669
E2598, E2599, E2600.
LDW390-52858 (EMI H) REF.
FOR CONTINUATION
SEE SH 9.00 ZONE 37B

LDW280-52360-1 INSTL.

VIEW LOOKING DOWN - AFT EQUIPT. BAY
CLUSTERS II (8A4) & III (8A3)

02/03 NAS 9-1100

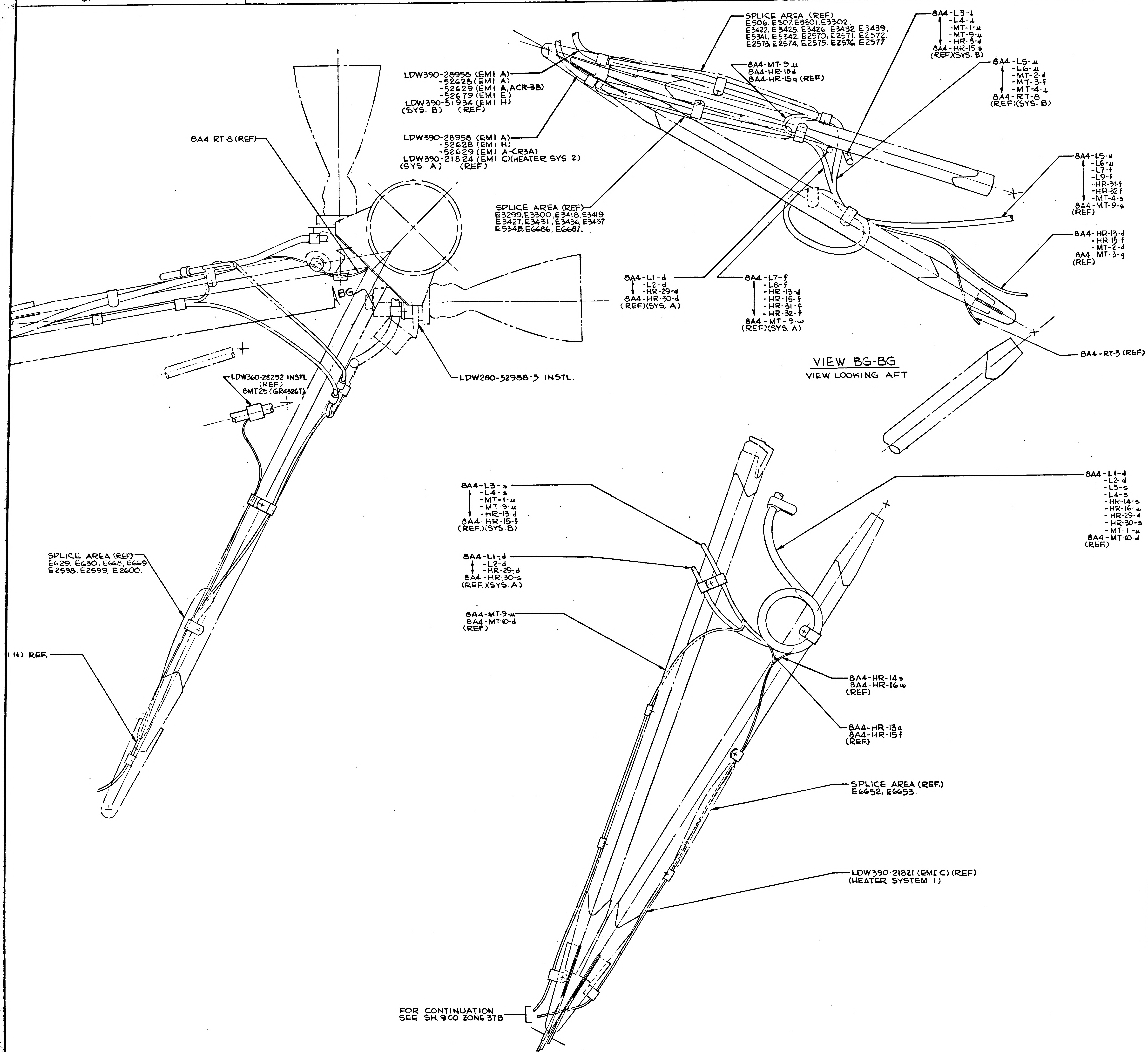
61
60
59
58
57
LDW390-28958 (EMI A)
-52628 (EMI A)
-52629 (EMI A, ACR-3B)
-52679 (EMI E)
LDW390-51934 (EMI H)
(SYS. B) (REF)
LDW390-28958 (EMI A)
-52628 (EMI H)
-52629 (EMI A-CR3A)
LDW390-21824 (EMI C)(HEATER SYS. 2)
(SYS. A) (REF)
8A4-RT-8 (REF)
SPLICE AREA (REF)
E3299, E3300, E3418, E3419
E3427, E3431, E3436, E3437
E534B, E6686, E6687.
BG
LDW280-52988-3 INSTL.
LDW360-28252 INSTL
(REF)
8MT25 (GR4326T)
SPLICE AREA (REF)
E506, E507, E3301, E3302,
E3422, E3425, E3426, E3432, E3439,
E5341, E5342, E2570, E2571, E2572,
E2573, E2574, E2575, E2576, E2577
8A4-MT-9 u
8A4-HR-13d
8A4-HR-15q (REF)
8A4-L3-i
-L4-i
-MT-1-u
-MT-9-u
-HR-13-d
8A4-HR-15-s
(REF)(SYS. B)
8A4-L5-u
-L6-u
-MT-2-d
-MT-3-f
-MT-4-i
8A4-RT-8
(REF)(SYS. B)
8A4-L5-u
-L6-u
-L7-f
-L9-f
-HR-31-f
-HR-32 f
-MT-4-s
8A4-MT-9-s
(REF)
8A4-HR-13-d
-HR-15-f
-MT-2-d
8A4-MT-3-g
(REF)
8A4-RT-3 (REF)
8A4-L1-d
-L2-d
-HR-29-d
8A4-HR-30-d
(REF)(SYS. A)
8A4-L7-f
-L8-f
-HR-13-d
-HR-15-f
-HR-31-f
-HR-32-f
8A4-MT-9-w
(REF)(SYS. A)
VIEW BG-BG
VIEW LOOKING AFT
SPLICE AREA (REF)
E629, E630, E668, E669
E2598, E2599, E2600.
H) REF.
8A4-L3-s
-L4-s
-MT-1-u
-MT-9-u
-HR-13-d
8A4-HR-15-f
(REF.)(SYS. B)
8A4-L1-d
-L2-d
-HR-29-d
8A4-HR-30-s
(REF.)(SYS. A)
8A4-MT-9-u
8A4-MT-10-d
(REF)
8A4-L1-d
-L2-d
-L3-s
-L4-s
-HR-14-s
-HR-16-u
-HR-29-d
-HR-30-s
-MT-1-u
8A4-MT-10-d
(REF.)
8A4-HR-14s
8A4-HR-16w
(REF)
8A4-HR-13a
8A4-HR-15f
(REF.)
SPLICE AREA (REF.)
E6652, E6653.
LDW390-21821 (EMI C) (REF)
(HEATER SYSTEM 1)
FOR CONTINUATION
SEE SH. 9.00 ZONE 37B

MANUFACTURING OPERATIONS

UNLESS OTHERWISE SPECIFIED
NOTES CHECKED √ APPLY TO THIS DWG.

PART NUMBER
AND ALL OTHER MARKINGS
IN REGION MARKED ⊠
USE BOTH SIDES IF NECESSARY.

FILLET AND INSIDE CORNER
RADII TOLERANCES
.016R TO .062R ± .010
.063R TO .250R ± .015
OVER .250R ± .030

DEPTH SHOWN FOR TAPPED
HOLES IS FULL THDS. 2-3 IMP THDS.
BEYOND PERMISSIBLE.

EXTERNAL THREAD LENGTH
SHOWN INCLUDES
2 IMPERFECT THREADS MAX.

DO NOT CADMIUM PLATE & PAINT
HOLES OR SURFACES MARKED
WITH DOUBLE ASTERISK.

MISMATCH STEP OF ± .005
PERMISSIBLE DUE TO CHANGE
OF CUTTERS AT INSIDE
INTERSECTING SURFACES.

DIAMETERS MARKED
MUST BE CONCENTRIC WITHIN
FULL INDICATOR
READING

HOLES MUST BE KEPT FREE OF
CHROME PLATING SOLUTION.

ALL DIMENSIONS SHOWN TO BE MET
AFTER CADMIUM PLATING.
THICKNESS OF PLATE .0003 MIN.
TO .0005 MAX. MIN. THICKNESS TO
BE .0002 ON THREADED AREAS.
NO ALLOWANCE FOR PLATING IN
HOLES

125 SURFACE ROUGHNESS
INCLUDING REAMED HOLES
PER MIL-STD-10

200 FOR ALL DRILLED HOLES

REMOVE ALL BURRS.
BREAK ALL EDGES .015-.031

INSPECTION INFORMATION
MINIMUM PERMISSIBLE
AVERAGE EDGE DISTANCE
MARKED IS

SYMBOL √ DENOTES SURFACE
TO BE MACHINED

UNLESS OTHERWISE SPECIFIED
TOLERANCE ON FLANGES IS ± 1/32

LENGTHS OF AN, NAS & MS AL ALY
RIVETS SHORTER THAN 1 INCH ARE
NOT SPECIFIED.

TOLERANCE ON LOFTED
DELINEATIONS IS

DWG SIZE 34 X 120

PRINTING INFO ONLY
FULL SIZE SHEET AREA (36 X 130)= 32.5 SQ. FT.
1/2 SIZE SHEET AREA (1/4 OF FULL)= 8.125 SQ. FT.

PRINT TRIM LINE

03/03

NAS 9-1100

LDW280-52360 E

LDW280-52360 E

NOTE:
ALL CLAMPS ARE GC500A IN ACCORDANCE WITH LPC 280-23

GRUMMAN AIRCRAFT ENGRG CORP., BETHPAGE, L. I., NEW YORK

SIZE	CODE IDENT NO.		
J	26512	LDW280-52360	E

MODEL OR END ITEM | SCALE ~ | SHEET 12.00

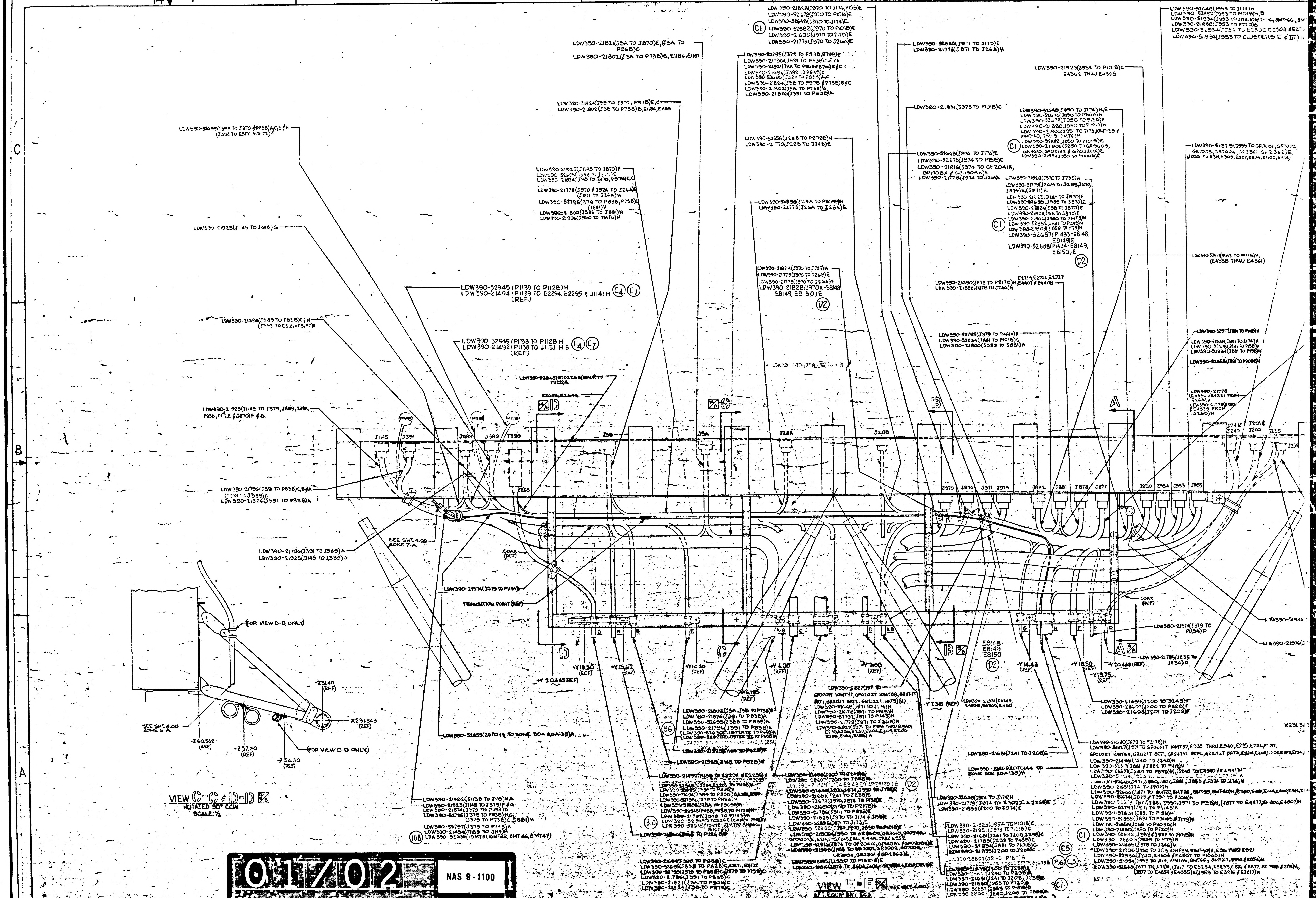
14
13
12
11
10
C
B
A
LDW390-21821(J3A TO J870)E,(J3A TO P96B)C
LDW390-21802(J3A TO P73B)B, E1186,E1187
LDW390-21824(J3B TO J870, P97B)E,C
LDW390-21802(J3B TO P73B)B,E1184,E1185
LDW390-21828(J970 TO J174, P15B)E
LDW390-52678(J970 TO P15B)E
LDW390-52648(J970 TO J174)E
LDW390 52882(J970 TO P101B)E
LDW390-21690(J970 TO 217B)E
LDW390-21778(J970 TO J26A)E
C1
LDW390-52795(J379 TO P83B,P73B)C
LDW390-21796(J391 TO P83B)C,E & A
LDW390-21821(J3A TO P96B & 870)E & C
LDW390-21694(J389 TO P83B)C
LDW390-52695(J388 TO P83B)A,C
LDW390-21824(J3B TO P97B & P73B)B & C
LDW390-21802(J3A TO P73B)B
LDW390-21826(J391 TO P83B)A
LDW390-52858(J28B TO P909B)H
LDW390-21779(J28B TO J26B)E
LDW390-52855(J971 TO J173)E
LDW390-21778(J971 TO J26A)H
LDW390-21923(J954 TO P101B)C
E4362 THRU E4365
LDW390-52648(J953 TO J174)H
LDW390 52882(J953 TO P101B)H,B
LDW390-51934(J953 TO J174,10MT-36, 8MT-66, 8M
LDW390-21880(J953 TO P720)B
LDW390-51934(J953 TO E2302 E2304 & E2
LDW390-51934(J953 TO CLUSTERS II & III)H
LDW390-21931(J973 TO P101B)C
LDW390-52648(J950 TO J174)H,E
LDW390-52674(J950 TO P35B)H
LDW390-52678(J950 TO P15B)H
LDW390-21880(J950 TO P720)H
LDW390-21906(J950 TO J173,10MT-39 & 10MT-40, 7MT5, 7MT6)H
LDW390-52882 J950 TO P101B)E
LDW390-21906(J950 TO GR9609, GR9610, GP0319X & GP0320X)E
LDW390-21951(J950 TO P1410B)E
LDW390-51929(J955 TO GR7001, GR7002, GR7003, GR7004, GR2361, GF2362)E, (J955 TO E314,E309,E307,E304,E302,E314)
LDW390-52695(J388 TO J870 & P83B)A,C,E & H (J388 TO E5171, E5172)C
LDW390-21925(J1145 TO J870)F
LDW390-52695(J388 TO J870)E
LDW390-21824(J3B TO J870, P97B)E,C
LDW390-21778(J970 & J974 TO J26A)E (J971 TO J26A)H
LDW390-52795(379 TO P83B, P73B)C (J881)H
LDW390-21800(J383 TO J881)H
LDW390-21906(J950 TO 7MT6)H
LDW390-52858(J28A TO P909B)H
LDW390-21778(J26A TO J28A)E
LDW390-52648(J974 TO J174)E
LDW390-52678(J974 TO P15B)E
LDW390-21916(J974 TO GF2041X, GP1408X & GP0908X)E
LDW390-21778(J974 TO J26A)E
LDW390-21828(J970 TO J735)H
LDW390-21779(J26B TO J28B,J970, J974)E,(J971)H
LDW390-21925(J1145 TO J870)F
LDW390-52695(J388 TO J870)E
LDW390-21824(J3B TO J870)E
LDW390-21821(J3A TO J870)E
LDW390-21906(J950 TO 7MT5)H
LDW390 52882 J887 TO P101B)H
LDW390-21808(J859 TO P75)H
LDW390-52687(P1433-E8148, E8149)E
LDW390-52688(P1434-E8149, E8150)E
D2
LDW390-52517(J882 TO P111B)H, (E4358 THRU E4361)
LDW390-21925(J1145 TO J388)G
LDW390-52945 (P1139 TO P112B)H
LDW390-21494 (P1139 TO E2294, E2295 & J114)H (REF.)
E4
E7
LDW390-21828(J970 TO J735)H
LDW390-21779(J970 TO J26B)E
LDW390-21778(J970 TO J26A)E
LDW390-21828(J970X-E8148 E8149, E8150)E
LDW390-21690(J878 TO P217B)H, E2724,E2726,E2727 E4407 & E4408
LDW390-21888(J878 TO J246)H
LDW390-21694(J389 TO P83B)C & H (J389 TO E5181 & E5182)H
LDW390-52945 (P1138 TO P112B H
LDW390-21492 (P1138 TO J115) H,E (REF)
LDW390-52795(J379 TO J881X)H
LDW390-52834(J881 TO P101B)C
LDW390-21800(J383 TO J881)H
LDW390-52517(J881 TO P111B)H
LDW390-52648(J881 TO J174)H
LDW390-52678(J881 TO P15B)H
LDW390-52834(J881 TO P15B)H
LDW390-52855(J881 TO P908B)H
LDW390-52945(GT0226E(15A14)TO P112B)H
E2643,E2644
LDW390-21925(J1145 TO J379,J389,J388, P83B,P112B & J870)F & G.
LDW390-21778 (E4330 & E4331 FROM J26A)H
LDW390-21779(E4328 & E4329 FROM J26B)H
P398
P1139
P1138
J1145
J391
J388
J389
J390
J3B
J3A
J28A
J28B
J241 & J240
J201 & J200
J235
J239
J970
J974
J971
J973
J882
J881
J878
J877
J950
J954
J953
J955
J1165
LDW390-21796(J391 TO P83B)C,E & A (J391 TO J389)A
LDW390-21826(J391 TO P83B)A
SEE SHT. 4.00 ZONE 7-A
LDW390-21796(J391 TO J389)A
LDW390-21925(J1145 TO J389)G
COAX (REF)
LDW390-21574(J379 TO P1134)D
TRANSITION POINT (REF)
(FOR VIEW D-D ONLY)
-Z51.40 (REF)
X231.343 (REF)
SEE SHT. 4.00 ZONE 5-A
-Z60.562 (REF)
-Z57.20 (REF)
-Z54.30 (REF)
(FOR VIEW D-D ONLY)
LDW390-52855(20TC144 TO ZONE BOX 20A139)H
+Y18.50 (REF)
+Y20.445(REF)
+Y15.62 (REF)
+Y10.20 (REF)
+Y4.00 (REF)
+Y6.195 (REF)
-Y4.00 (REF)
-Y3.00 (REF)
-Y7.315 (REF)
-Y14.43 (REF)
-Y18.50 (REF)
-Y19.75 (REF)
-Y20.445 (REF)
E8148
E8149
E8150
D2
D
H
E
F
A-B
C
G
LDW390-21492(J1138 TO J115)H,E
LDW390-21925(J1145 TO J379) F & G
LDW390-21574(J379 TO P1134)D
LDW390-52795(J379 TO P83B)H,C (J379 TO P73B)C (J881)H
LDW390-52797(J379 TO P1143)H
LDW390-21494(J1139 TO J114)H
10B
LDW390-52635(10MT81,10MT82, 8MT46, 8MT47)
LDW390-21802(J3A,J3B TO P73B)B
LDW390-21826(J391 TO P83B)A
LDW390-52695(J388 TO P83B)A
LDW390-21796(J391 TO P83B)A
LDW390-52630(CLUSTER III TO P44B)A
LDW390-52628(CLUSTER III TO P45B)A
SYSTEM "B"
B6
LDW390-21925(J1145 TO P112B)F
LDW390-21925(J1145 TO P83B)G
LDW390-21492(P1138 TO E2292 & E2293)H
LDW390-52945(E2294,E2295 TO P112B)H
LDW390-52695(J388 TO P83B)H
LDW390-21694(J389 TO P83B)H,E5181,E5182
LDW390-52795(J379 TO P83B)H
LDW390-52858(J28A TO P909B)H
LDW390-52945(P1138,P1139 TO P112B)H
LDW390-21797(J379 TO P1143)H
LDW390-52945(GT0226E(15A14) TO P112B)H
LDW390-52635(10MT81,10MT82 8MT46, 8MT47)
B10
LDW390-21564(J1165 TO P1126 B)D
LDW390-21694(J389 TO P83B)C
LDW390-52695(J388 TO P83B)C,E5171, E5172
LDW390-52795(J379 TO P83B)C,(J379 TO P73B)C
LDW390-21796(J391 TO P83B)C
LDW390-21821(J3A TO P96B)C
LDW390-21824(J3B TO P97B)C
LDW390-51827(J971 TO GP0201T 10MT37,GP0202T 10MT38, GR1121T 8RT1,GR2121T 8RT2, GR2122T 8RT5)(H)
LDW390-52648(J971 TO J174)H
LDW390-21678(J971 TO P15B)H
LDW390-52797(J971 TO P1143)H
LDW390-21779(J971 TO J26B)H
LDW390-51827(J971 TO E935 THRU E940, E235,E236,E237,E204,E205,E206 E193,E194,E195) H
LDW390-21931(E4359, E4358,E4360,E4361
LDW390-21490(J200 TO J249)E
LDW390-28607(J200 TO J89B)E
LDW390-21828(J174-E8148,E8149E8150)E
LDW390-52648(J970,J974,J950 TO J174)E
LDW390-21651(J241 TO J238)E
LDW390-52678(J970,J974 TO P15B)E
LDW390-21690(J970 TO P217B)E
LDW390-21796(J391 TO P83B)E
LDW390-21828(J970 TO J174 & J15B)E
LDW390-52855(J971 TO J173)E
LDW390-52882(J887,J970,J950 TO P101B)E
LDW390-21906(J950 TO GR9609,GR9610,GP0319X, GP0320X)E, E214,E215,E245,E146, E949 THRU E952
LDW390-21916(J974 TO GF2041X,GP1408X & GP0908X)E
LDW390-51929(J955 TO GR7001,GR7002,GR7003, GR7004,GR2361 & GR2362)E
LDW390-21951(J950 TO P1410B)E
LDW390-21651(J241 TO J208)G
LDW390-52855(20TC144 TO ZONE BOX 20A139)H
LDW390-52648(J974 TO J174)H
LDW390-21779(J974 TO E3022 & J26B)E
LDW390-21855(J200 TO J974)E
LDW390-21923(J954 TO P101B)C
LDW390-21931(J973 TO P101B)C
LDW390-21651(J241 TO J208,J238)C
LDW390-21789(J239 TO P45B)C
LDW390-52834(J881 TO P101B)C
LDW390-21835(J200 TO J238)C
C5
LDW390-28607(J240-P180)B
A-CR3B
B6
C3
LDW390-21835(J200 TO J238)A
LDW390-28607(J240 TO P89B)B
LDW390-21651(J241 TO J208, J238)B
LDW390-21880(J953 TO P720)B
LDW390 52882(J953 TO P101B)B
LDW390-28607(J240,J200 TO P89B)A
LDW390-52630(CLUSTER II TO P44B)A
LDW390-52628(CLUSTER II TO P45B)A
SYSTEM "B"
C1
LDW390-21499(J200 TO J249)F
LDW390-28607(J200 TO P89B)F
LDW390-21608(J201 TO J209)F
LDW390-21690(J878 TO P217B)H
LDW390-51827(J971 TO GP0201T 10MT37, E935 THRU E940, E235, E236, E237, GP0202T 10MT38, GR1121T 8RT1, GR2121T 8RT2, GR2122T 8RT5, E204, E205, E206, E193, E194,
LDW390-21499(J240 TO J249)H
LDW390-52517(J881 & J882 TO P111B)H
LDW390-28607(J240 TO P89B)H,(J240 TO E4940 & E4941)H
LDW390-51934(J953 TO E2302, E2304 & E2305)H
LDW390-52648(J971, J950, J877, J881, J953 & J974 TO J174)H
LDW390-21651(J241 TO J208)H
LDW390-52666(J877 TO 8MT37, 8MT38, 8MT39, 8MT40)H,(E390,E391,E401,E400,E396,E
LDW390-52674(J877 & J950 TO P35B)H
LDW390-52678 J877, J881, J950, J971 TO P15B)H,(J877 TO E4377, E4806, E4807)H
LDW390-52797(J971 TO P1143)H
LDW390-52834(J881 TO P15B)H
LDW390-52855(J881 TO P908B & J173)H
LDW390-52858(J288 TO P909B)H
LDW390-21880(J950 TO P720)H
LDW390 52882 J953 & J887 TO P101B)H
LDW390 28808 J859 TO P75)H
LDW390-21888(J878 TO J246)H
LDW390-21906(J950 TO J173, 10MT-39, 10MT-40)H, E916 THRU E921
LDW390-52936(J240, E4806 & E4807 TO P106B)H
LDW390-51934(J953 TO J174, 10MT36, 8MT66 & 8MT27, E953 & E954)H
LDW390-51648(J877 TO J174)H,(J877 TO E3254, E3253, E876 & E877 AT P15B & J174)H, (J877 TO E4354 & E4355)H(J953 TO E3216 & E3217)H
COAX (REF)
LDW390-21574(J379 TO P1134)D
LDW390-21789(J235 TO J236)D
LDW390-51934
LDW390-21976(J
X231.343

VIEW C-C & D-D 4/B
ROTATED 90° CCW
SCALE: ½

VIEW E-E 16/A (SEE SHT 4.00)
AFT EQUIP BAY
LOOKING DOWN

01/02

NAS 9-1100

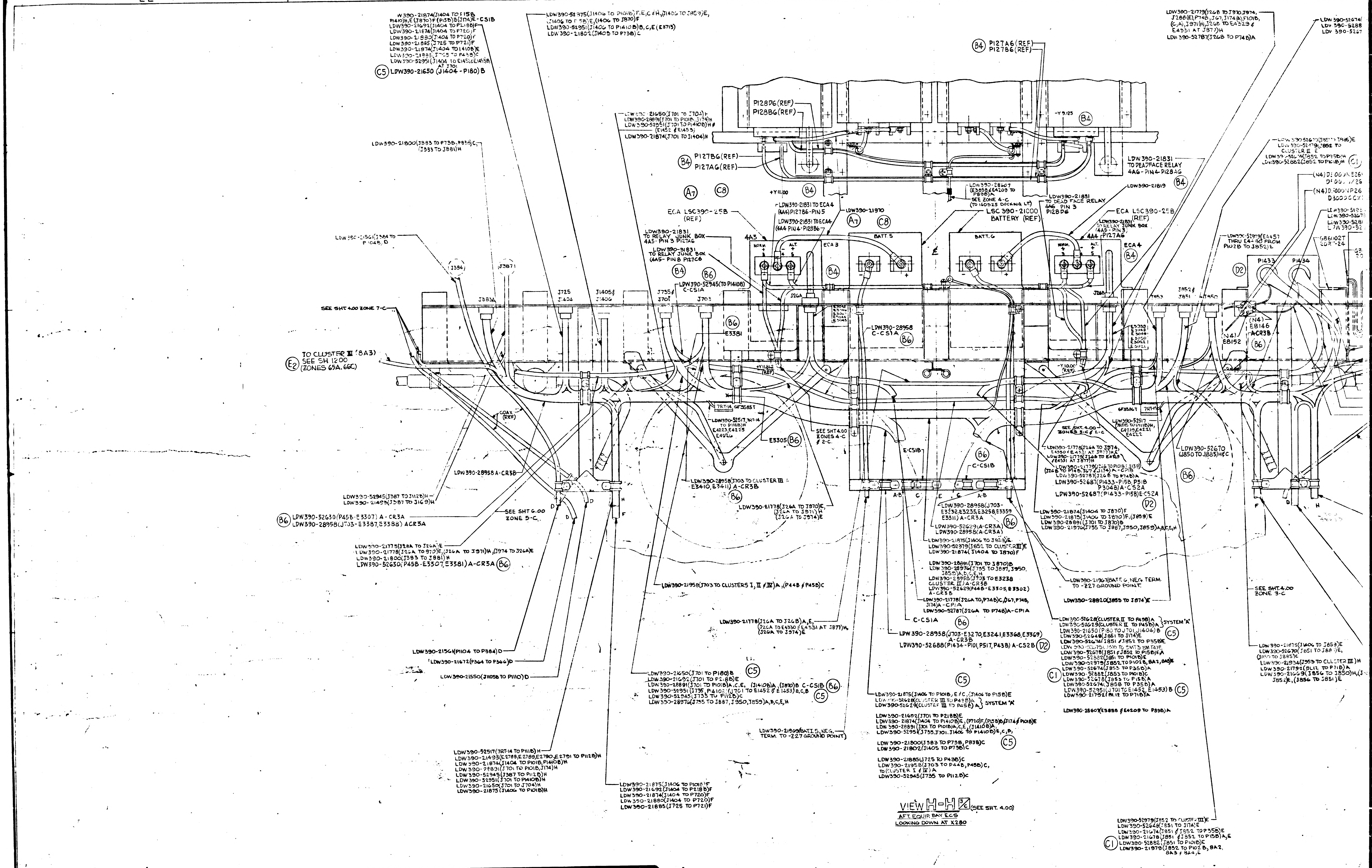
22
21
20
19
18
W390-21874(J1404 TO F15B P1410)H,E(J870)F(P15B)B(J174)E-CS1B
LDW390-21692(J1404 TO P218B)F
LDW390-21874(J1404 TO P720)F
LDW390-21880(J1404 TO P720)F
LDW390-21885(J725 TO P721)F
LDW390-21974(J1404 TO 1410B)E
LDW390-21885(J725 TO P43B)C
LDW390-52951(J1404 TO E1452 & E1453)B AT J701
C5 LDW390-21650 (J1404 - P180) B
LDW390-52875(J1406 TO P101B)F,E,C & H,(J1406 TO J859)E, (J1406 TO P15B)E,(1406 TO J870)F
LDW390-52951(J1406 TO P1410B)B,C,E(E3713)
LDW390-21802(J1405 TO P73B)C
LDW390-21650(J701 TO J704)H
LDW390-28891(J701 TO P101B,J174)H
LDW390-52951(J701 TO P1410B)H & (E1452 & E1453)
LDW390-21874(J701 TO J1404)H
B4 P127A6(REF)
P127B6(REF)
P128D6(REF)
P128B6(REF)
-Y9.125
B4
B4 P127B6(REF)
P127A6(REF)
A7
C8
+Y11.00
B4
LDW390-28607 (E3858 & E4209 TO P89B)A
SEE ZONE 4-C (TO 16D525 DOCKING LT)
LDW390-21831 TO DEADFACE RELAY 4A6-PIN4-P128A6
B4
LDW390-21819
LDW390-21831 TO DEAD FACE RELAY 4A6 PIN 3 P128D6
LDW390-21800(J383 TO P73B,P83B)C, (J383 TO J881)H
LDW390-21831 TO ECA 4 (4A4) P127B6-PIN 5
LDW390-21970
LDW390-21831 TO ECA4 (4A4 PIN 4-P128B6
ECA LSC390-25B (REF)
A7
C8
LSC 390-21000 BATTERY (REF)
ECA LSC390-25B (REF)
LDW390-21831 TO RELAY JUNK BOX (4A5-PIN 3) 4A4 P127A6
LDW390-21831 TO RELAY JUNK BOX 4A5-PIN 3 P127A6
LDW390-31831 TO RELAY JUNK BOX (4A5-PIN 8 P127C6
4A3
NORM. + 3
- 4
ALT. + 5
ECA 3
BATT. 5
BATT. 6
NORM. + 3
- 4
ALT. + 5
ECA 4
B4
B4
B4
B6
LDW390-21561(J384 TO P104B)D
J384
J387
LDW390-52945(TO P1410B) C-CS1A
J383A
J725 J1404
J1405 & J1406
J735 & J701
J703
J26A
E3043 E3046 E3047 E3044 E3045
J26B
J853
J852 & J851
J950
LDW390-52979(E4457 THRU E4480 FROM P102B TO J852)E
D2
P1433
P1434
(N4) E8146 A-CR3B
(N4) E8152
B6
LDW390-52670(J851 TO J885)E
LDW390-52179(J852 TO CLUSTER II)E
LDW390-52674(J852 TO P35B)H
LDW390-52882(J852 TO P101B)H
C1
LDW390-52674
LDW390-5288
LDW390-5267
SEE SHT 4.00 ZONE 7-C
B6
E3381
LDW390-28958 C-CS1A
B6
E3323 E3324 E3325 E3327
TO CLUSTER III (8A3) SEE SH 1200 (ZONES 65A, 66C)
E2
+Y11.812 (REF)
-Y10.00 (REF)
COAX (REF)
7RT-14 GF3585T
LDW390-52517,7RT-14 TO P111B)H E4223,E4225 E4226
E3305 B6
SEE SHT 4.00 ZONES 4-C & 2-C.
6F3586T 7RT-15
LDW390-52517 (7RT15 TO P111B)H, E4219,E4221 E4222
SEE SHT. 4.00 ZONES 5-C & 2-C
LDW390-21778(J26A TO J974, E4330 & E4331 AT J877)H,E
LDW390-21779(J26B TO E4329 & E4331 AT J877)H
LDW390-21779(J26B TO P101B & 313B) (J26B TO P74B, J67 & J174) A-CP1B
LDW390-52787(J26B TO P74B)A
LDW390-52687(P1433-P15B, P51B P304B)A-CS2A
LDW390-52687(P1433-P15B)E-CS2A
D2
LDW390-52670 (J850 TO J885)H & C
B6
LDW390-28958 A-CR3B
E-CS1B
B6
C-CS1B
A-B
C
E
C
A-B
D
D
D
F
H
F
D
H
LDW390-52945(J387 TO J112B)H
LDW390-21493(J387 TO J169)H
B6 LDW390-52630(P45B-E3307) A-CR3A
LDW390-28958(J703-E3387,E3388) ACR3A
SEE SHT 6.00 ZONE 5-C
LDW390-21775(J28A TO J26A)E
LDW390-21778(J26A TO 970)E,(J26A TO J971)H,(J974 TO J26A)E
LDW390-21800(J383 TO J881)H
LDW390-52630(P45B-E3307,E3381)A-CR3A B6
LDW390-28958(J703 TO CLUSTER III - E3410, E3411) A-CR3B
B6
LDW390-21778(J26A TO J970)E, (J26A TO J971)H (J26A TO J974)E
LDW390-28958(J703-E3232,E3235,E3258,E3359 E3311) A-CR3A
B6
LDW390-52629(A-CR3A)
LDW390-28958(A-CR3A)
LDW390-21875(J1406 TO J859)E
LDW390-52379(J852 TO CLUSTER III)E
LDW390-21874(J1404 TO J870)F
LDW390-28891(J701 TO J870)B
LDW390-28976(J735 TO J887, J950, J859)A,B,C,E,H
LDW390-28958(J703 TO E3238 CLUSTER II) A-CR3B
LDW390-52629(P44B-E3305,E3302) A-CR3B
LDW390-21778(J26A TO,P74B)C,(J67,P74B, J174)A-CP1A
LDW390-52787(J26A TO P74B)A-CP1A
C-CS1A
B6
LDW390-28958(J703-E3270,E3241,E3368,E3369) A-CR3B
LDW390-52688(P1434-P101,P517,P43B) A-CS2B
D2
LDW390-21874(J1404 TO J870)F
LDW390-21875(J1406 TO J870)F,(J859)E
LDW390-28891(J701 TO J870)B
LDW390-21976(J735 TO J887,J950,J859)A,B,C,E,H
LDW390-21967(BATT. 6, NEG. TERM. TO -Z27 GROUND POINT.
LDW390-28920(J853 TO J874)E
SEE SHT. 4.00 ZONE 3-C
LDW390-52628(CLUSTER II TO P43B)A
LDW390-52629(CLUSTER II TO P45B)A
SYSTEM 'A'
LDW390-21650 (P180 TO J701, J1404) B
C5
LDW390-52648(J851 TO J174)E
LDW390-52674(J851 & J852 TO P35B)E
LDW390-52675(J300 TO 8MT3 8MT4)E
LDW390-52678(J851 & J852 TO P15B)E,A
LDW390-52882(J851 TO P101B)E
LDW390-52979(J852 TO P102B, 8A2, 8A5)E
LDW390-52674(J853 TO P35B)A
C1
LDW390-52882(J853 TO P101B)C
LDW390-52678(J853 TO P15B)A
LDW390-52674(J858 TO P35B)A
LDW390-52951(J701 TO E1452, E1453) B
C5
LDW390-21792(8L12 TO P71B)A
LDW390-28607(E3858 & E4209 TO P89B)A
LDW390-21875(J1406 TO J859)E
LDW390-52670(J851 TO J885)E, (J850 TO J885)C
LDW390-21934(J953 TO CLUSTER III)H
LDW390-21792(8L12 TO P71B)A
LDW390-21669(J856 TO J850)H,(J856 TO J852)E,(J856 TO J851)E
LDW390-21958(J703 TO CLUSTERS I, II & IV)A,(P44B & P45B)C
LDW390-21778(J26A TO J26B)A,E, (J26A TO E4330 & E4331 AT J877)H, (J26A TO J974)E
LDW390-21561(P1104 TO P384)D
LDW390-21672(P364 TO P366)D
LDW390-21550(J1105B TO P1110)D
C5
LDW390-21650(J701 TO P180)B
LDW390-21692(J701 TO P218B)E
LDW390-28891(J701 TO P101B)A,C,E, (J1410B)A, (J870)B C-CS1B
B6
LDW390-52951(J735, P1410B)(J701 TO E1452 & E1453)E,C,B
C5
LDW390-52945(J735 TO P112B)C
LDW390-28976(J735 TO J887, J950, J859)A,B,C,E,H
C5
LDW390-21875(J1406 TO P101B, E & C, (J1406 TO P15B)E
LDW390-52628(CLUSTER III TO P43B)A
LDW390-52629(CLUSTER III TO P45B)A
SYSTEM 'A'
LDW390-21692(J701 TO P218B)E
LDW390-21874(J1404 TO P1410B)E, (P720)F, (P15B)B, (J174 & P101B)E
LDW390-28891(J701 TO P101B)A,C,E, (J1410B)A,
LDW390-52951(J735, J701, J1406 TO P1410B)E,C,B,
C5
LDW390-21969(BATT. 5, NEG. TERM. TO -Z27 GROUND POINT)
LDW390-21800(J383 TO P73B, P83B)C
LDW390-21802(J1405 TO P73B)C
LDW390-21885(J725 TO P43B)C
LDW390-21958(J703 TO P44B, P45B)C, TO (CLUSTER I & IV) A
LDW390-52945(J735 TO P112B)C
LDW390-52517(7RT-14 TO P111B)H
LDW390-21493(E2788,E2789,E2790,E2791 TO P112B)H
LDW390-21874(J1404 TO P101B, P1410B)H
LDW390-28891(J701 TO P101B, J174)H
LDW390-52945(J387 TO P112B)H
LDW390-52951(J701 TO P1410B)H
LDW390-21650(J701 TO J704)H
LDW390-21875(J1406 TO P101B)H
LDW390-21875(J1406 TO P101B)F
LDW390-21692(J1404 TO P218B)F
LDW390-21874(J1404 TO P720)F
LDW390-21880(J1404 TO P720)F
LDW390-21885(J725 TO P721)F
LDW390-52979(J852 TO CLUSTER III)E
LDW390-52648(J851 TO J174)E
LDW390-21674(J851 & J852 TO P35B)E
LDW390-21678(J851 & J852 TO P15B)A,E
C1
LDW390-52882(J851 TO P101B)E
LDW390-21979(J852 TO P102B, 8A2, 8A3 & 8A4,E

VIEW H-H 3/C (SEE SHT. 4.00)
AFT. EQUIP. BAY ECS
LOOKING DOWN AT X280

2/2

01/02 NAS 9-1100

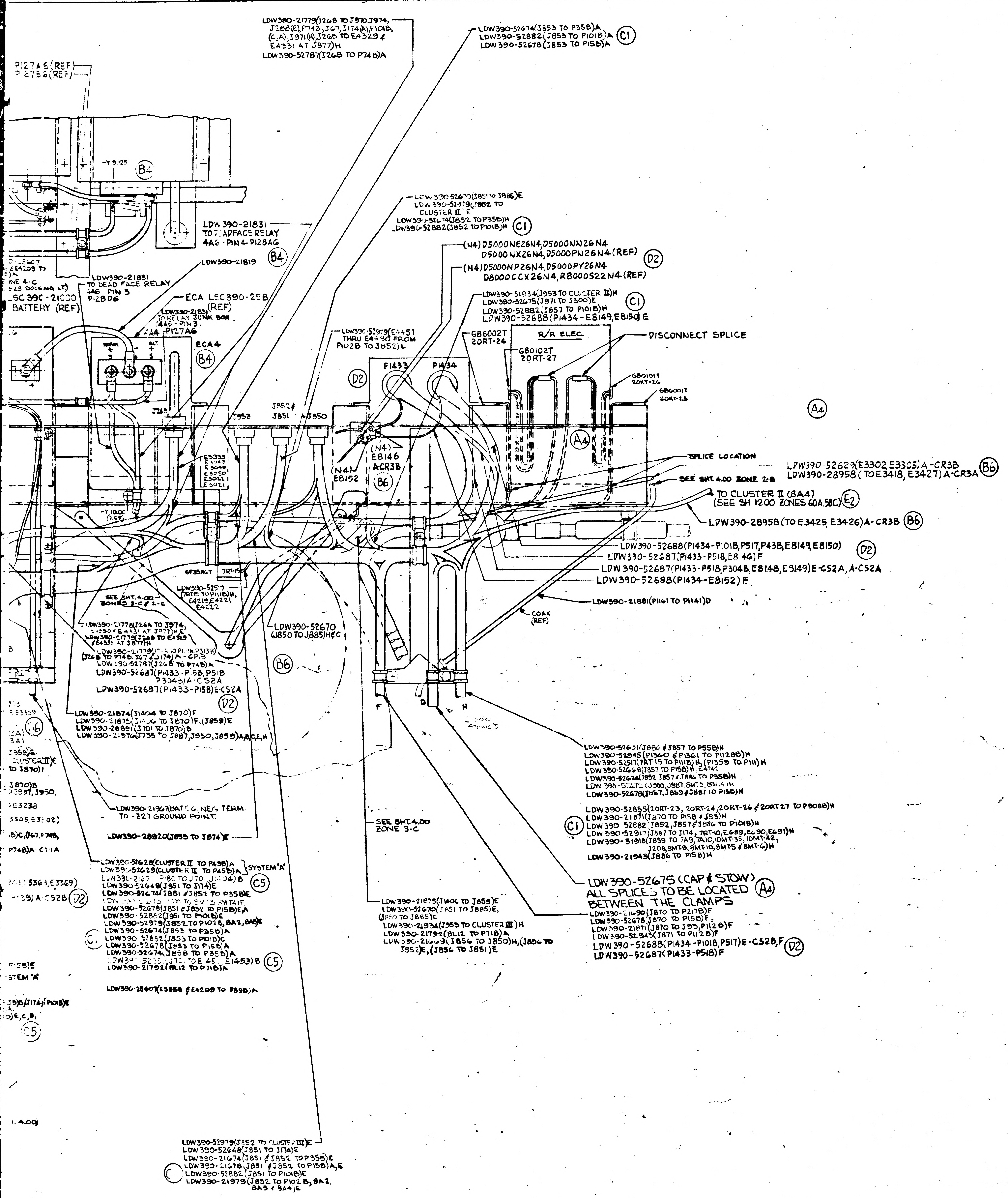
19
18
17
16
LDW390-21779(J26B TO J970,J974, J28B(E),P74B,J67,J174(A),P101B, (C,A),J971(H),J26B TO E4329 & E4331 AT J877)H
LDW390-52787(J26B TO P74B)A
LDW390-52674(J853 TO P35B)A
LDW390-52882(J853 TO P101B)A
LDW390-52678(J853 TO P15B)A
C1
P127A6(REF)
P127B6(REF)
-Y 9.125
B4
LDW 390-21831 TO DEADFACE RELAY 4A6 - PIN 4 - P128A6
B4
LDW390-21819
LDW390-21831 TO DEAD FACE RELAY 4A6 PIN 3 P128D6
LSC 390-21000 BATTERY (REF)
ECA LSC390-25B (REF)
LDW390-21831 TO RELAY JUNK BOX (4A5 - PIN 3)
4A4 - P127A6
ECA4
B4
NORM. + 3
- 4
ALT. + 5
LDW 390 52670(J851 TO J885)E
LDW 390-52979(J852 TO CLUSTER II)E
LDW390-52674(J852 TO P35B)H
LDW390-52882(J852 TO P101B)H
C1
(N4) D5000NE26N4, D5000NN26N4 D5000NX26N4, D5000PN26N4 (REF)
D2
(N4) D5000NP26N4, D5000PY26N4 D8000CCX26N4, R8000S22N4 (REF)
LDW390-51934(J953 TO CLUSTER II)H
LDW390-52675(J871 TO J300)E
LDW390-52882(J857 TO P101B)H
LDW390-52688(P1434 - E8149, E8150) E
C1
LDW390-52979(E4457 THRU E4480 FROM P102B TO J852)E
GB6002T 20RT-24
R/R ELEC.
GB0102T 20RT-27
DISCONNECT SPLICE
GB0101T 20RT-26
GB6001T 20RT-23
P1433
P1434
D2
J852 &
J851
J850
J953
J26B
(N4) E8146 A-CR3B
(N4) E8152
B6
A4
A4
SPLICE LOCATION
SEE SHT. 4.00 ZONE 2-B
LDW390-52629(E3302, E3305) A-CR3B
LDW390-28958(TO E3418, E3427) A-CR3A
B6
TO CLUSTER II (8A4) (SEE SH 12.00 ZONES 60A, 58C)
E2
LDW390-28958(TO E3425, E3426) A-CR3B
B6
LDW390-52688(P1434-P101B, P517, P43B, E8149, E8150)
D2
LDW390-52687(P1433-P518, E8146)F
LDW 390-52687(P1433-P518, P304B, E8148, E8149) E-CS2A, A-CS2A
LDW390-52688(P1434-E8152)F
LDW390-21881(P1161 TO P1141)D
COAX (REF)
6F35B6T
7RT-15
LDW390-52517 (7RT-15 TO P111B)H, E4219, E4221 E4222
SEE SHT. 4.00 ZONES 3-C & 2-C
LDW390-52670 (J850 TO J885)H&C
B6
LDW390-21778(J26A TO J974, E4330 & E4331 AT J977)H,E
LDW390-21779(J26B TO E4329 & E4331 AT J877)H
LDW390-21779(J26B TO P101B, P313B) (J26B TO P74B, J67 & J174) A - CP1B
LDW390-52787(J26B TO P74B)A
LDW390-52687(P1433-P15B, P518 P304B)A-CS2A
LDW390-52687(P1433-P15B)E-CS2A
D2
LDW390-21874(J1404 TO J870)F
LDW390-21875(J1406 TO J870)F, (J859)E
LDW390-28891(J701 TO J870)B
LDW390-21976(J755 TO J887, J950, J859)A,B,C,E,H
LDW390-21967(BATT. 6, NEG TERM. TO -Z27 GROUND POINT.
LDW390-28920(J853 TO J874)E
B6
LDW390-52628(CLUSTER II TO P43B)A
LDW390-52629(CLUSTER II TO P45B)A
SYSTEM 'A'
LDW390-21650(P180 TO J701, J1404)B
C5
LDW390-52648(J851 TO J174)E
LDW390-52674(J851 & J852 TO P35B)E
LDW390-52675(J300 TO 8MT3, 8MT4)E
LDW390-52678(J851 & J852 TO P15B)E,A
LDW390-52882(J851 TO P101B)E
LDW390-52979(J852 TO P102B, 8A2, 8A5)E
LDW390-52674(J853 TO P35B)A
LDW390-52882(J853 TO P101B)C
LDW390-52678(J853 TO P15B)A
C1
LDW390-52674(J858 TO P35B)A
LDW390-52051(J701 TO E1451, E1453)B
C5
LDW390-21792(8L12 TO P71B)A
LDW390-28607(E3858 & E4209 TO P89B)A
D2
C5
SEE SHT. 4.00 ZONE 3-C
F
D
H
J300 STOWED
LDW390-52631(J856 & J857 TO P55B)H
LDW390-52945(P1360 & P1361 TO P1128B)H
LDW390-52517(7RT-15 TO P111B)H, (P1359 TO P111)H
LDW390-52668(J857 TO P15B)H, E4742
LDW390-52674(J852, J857 & J886 TO P35B)H
LDW 390-52675(J300, J887, 8MT3, 8MT4)H
LDW390-52678(J857, J859 & J887 TO P15B)H
LDW390-52855(20RT-23, 20RT-24, 20RT-26 & 20RT 27 TO P908B)H
LDW390-21871(J870 TO P15B & J95)H
C1
LDW 390 52882(J852, J857 & J886 TO P101B)H
LDW 390-52917(J887 TO J174, 7RT-10, E689, E690, E691)H
LDW390-51918(J859 TO 7A9, 7A10, 10MT-35, 10MT-42, J208, 8MT9, 8MT-10, 8MT-5 & 8MT-6)H
LDW390-21943(J886 TO P15B)H
LDW390-52675 (CAP & STOW) ALL SPLICES TO BE LOCATED BETWEEN THE CLAMPS
A4
LDW390-21875(J1406 TO J859)E
LDW390-52670(J851 TO J885)E, (J850 TO J885)C
LDW390-21934(J953 TO CLUSTER III)H
LDW390-21792(8L12 TO P71B)A
LDW390-21669(J856 TO J850)H, (J856 TO J852)E, (J856 TO J851)E
LDW390-21690(J870 TO P217B)F
LDW390-52678(J870 TO P15B)F
LDW390-21871(J870 TO J93, P112B)F
LDW390-52945(J871 TO P112B)F
LDW390-52688(P1434-P101B, P517)E-CS2B, F
LDW390-52687(P1433-P518)F
D2
LDW390-52979(J852 TO CLUSTER III)E
LDW390-52648(J851 TO J174)E
LDW390-21674(J851 & J852 TO P35B)E
LDW390-21678(J851 & J852 TO P15B)A,E
LDW390-52882(J851 TO P101B)E
LDW390-21979(J852 TO P102B, 8A2, 8A3 & 8A4)E
19
18
17
16

MANUFACTURING OPERATIONS
UNLESS OTHERWISE SPECIFIED
NOTES CHECKED √ APPLY TO THIS DWG.

PART NUMBER AND ALL OTHER MARKINGS IN REGION MARKED ▭ USE BOTH SIDES IF NECESSARY.

FILLET AND INSIDE CORNER RADII TOLERANCES
.016R TO .062R ± .010
.063R TO .250R ± .015
OVER .250R ± .030

DEPTH SHOWN FOR TAPPED HOLES IS FULL THDS. 2-3 IMP THDS. BEYOND PERMISSIBLE.

EXTERNAL THREAD LENGTH SHOWN INCLUDES 2 IMPERFECT THREADS MAX.

DO NOT CADMIUM PLATE & PAINT HOLES OR SURFACES MARKED WITH DOUBLE ASTERISK.

MISMATCH STEP OF ± .005 PERMISSIBLE DUE TO CHANGE OF CUTTERS AT INSIDE INTERSECTING SURFACES.

DIAMETERS MARKED MUST BE CONCENTRIC WITHIN FULL INDICATOR READING

HOLES MUST BE KEPT FREE OF CHROME PLATING SOLUTION.

ALL DIMENSIONS SHOWN TO BE MET AFTER CADMIUM PLATING. THICKNESS OF PLATE .0002 MIN. TO .0005 MAX. MIN. THICKNESS TO BE .0002 ON THREADED AREA. NO ALLOWANCE FOR PLATING HOLES

125 √ SURFACE ROUGHNESS INCLUDING REAMED HOLES PER MIL-STD-10

200 √ FOR ALL DRILLED HOLES

REMOVE ALL BURRS. BREAK ALL EDGES .015-.031

INSPECTION INFORMATION MINIMUM PERMISSIBLE AVERAGE EDGE DISTANCE MARKED IS

SYMBOL √ DENOTES SURFACE TO BE MACHINED

UNLESS OTHERWISE SPECIFIED TOLERANCE ON FLANGES IS ± 1/32

LENGTHS OF AN, NAS & MS AL ALY RIVETS SHORTER THAN 1 INCH ARE NOT SPECIFIED.

TOLERANCE ON LOFTED DELINEATIONS IS

ELECTRONIC CABLING INSTALLATION

LOOKING DOWN AT +X280. AFT. EQUIP. BAY ECS
VIEW H-H

02/02 NAS 9-1100

(TO BE REDRAWN ON PRODUCTION FORMAT)

LEM 2(32)	GRUMMAN AIRCRAFT ENGRG CORP., BETHPAGE, L. I., NEW YORK			
	SIZE J	CODE IDENT NO. 26512	LDW280-52360	F
MODEL OR END ITEM	SCALE HALF			SHEET 6.00

15 This is an original Dwg

ENG 22.2 REV 3-65

*

GRUMMAN AIRCRAFT ENGINEERING CORP.
CODE IDENT NO. 26512
ENGINEERING ORDER

DWG NO. LDW280-52360		EO NO. A1	
CONTROL INFO NO. LDW280A-2408			

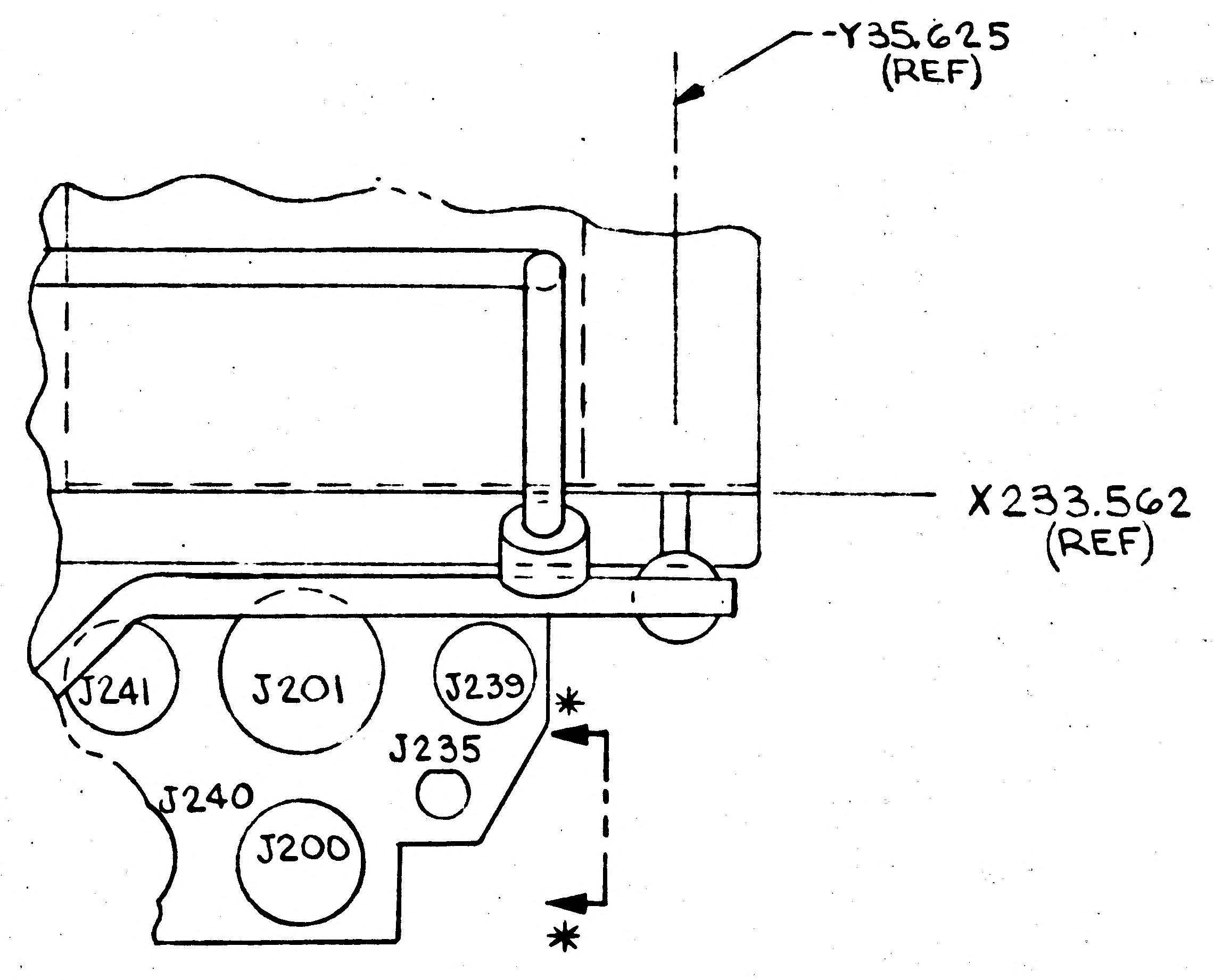

-Y35.625 (REF)
X233.562 (REF)
J241
J201
J239
*
J235
J240
J200
*

VIEW LOOKING AFT. (REF.)
SHEET 4.00 ZONE 3-A

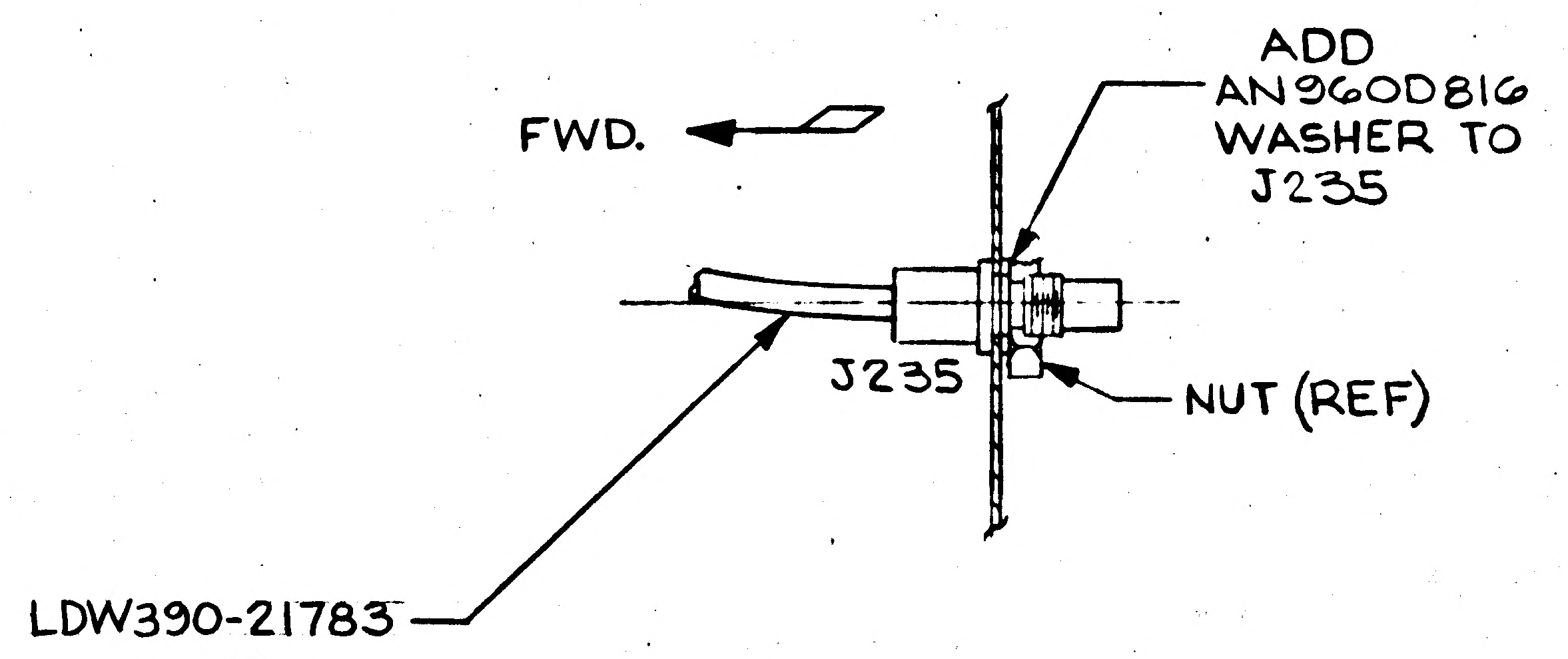

FWD.
ADD AN960D816 WASHER TO J235
J235
NUT (REF)
LDW390-21783

VIEW *-*

01
NAS 9-1100

* = ADD NEXT SECTION LETTER.

5

DETAIL SPEC REQ	☐	CL II ENGRG CHG	☐	CL I ENGRG CHG	☐

REASON FOR EO	DESCRIPTION OF EO	Ⓡ GAEC EO RELEASE
STRUCTURE THICKNESS NOT SUFFICIENT TO ALLOW TIGHTING OF JAM NUT CONNECTOR.	TO -1 ADDED AN960D816 WASHER	10/27

MODEL	EFFECTIVITY: PROCURING ACTIVITY NO.	GAEC UNIT NO.	SUB CONTR UNIT NO.
LM		LM-2 (32)	

DRAWING CHANGE REQD: REVISE DWG	RECORD EO	DISPOSITION OF PARTS: REWORK	SCRAP
✓		✓	

APPROVED BY	JW	—	—	—	JN			
DATE	10/26/66				11-25		10-26-66	10/26/66
	VDI	SUPPORT	RELIAB GROUP	GROUP LEADER	STRESS GROUP	LIAISON ENGRG	PROJ ENGRG	

PRIORITY	DRAWING TITLE	DRAWING NO.	EO NO.
C	ELECTRONIC CABLING INSTALLATION	LDW280-52360	A1

BY A.MARCUS X7033 SECTION Equip. Lines (VDI) GROUP NO. 332 PL 35

*

ENG 32.1 REV 3-65

GRUMMAN AIRCRAFT ENGINEERING CORP.
CODE IDENT NO. 26512
ENGINEERING ORDER

DWG. NO. LEO 280-		EO NO. 314
CONTROL INFO NO. LDW280-A20[illegible]7		

ON SH 3 OF THE FOLLOWING DWGS

DWG No.-	CHG NO	DWG No.	CHG NO	DWG NO	CHG NO
✓ LDW280-52350	A2	✓ LDW280-52354	A4	✓ LDW280-52358	A1
✓ 52351	A2	✓ -52355	A2	✓ -52359	A3
✓ 52352	A1	✓ -52356	A1	LDW 280-52360	A2
✓ LDW 280-52353	A1	✓ LDW280 -52357	B2		

ADD THE FOLLOWING NOTE
‡ SUBSTITUTION OF NAS1132V*, AN525-832R* OR AN525-832-* BOLTS FOR THE GB511J-08-* BOLT IS PERMISSIBLE

‡ USE NEXT AVAILABLE NUMBER.

THIS IS A RE-ISSUE
OF LEO 280-314 ~
INCOMPLETE CHANGE NO'S
ON ORIG ISSUE

(5)

DETAIL SPEC REQ	☐	CL II ENGRG CHG	☐	CL I ENGRG CHG	☐

REASON FOR EO: HARDWARE NOT AVAILABLE

DESCRIPTION OF EO: ON SH 3 ADDED NOTE ‡ (‡)

GAEC EO RELEASE: 10/17

MODEL	PROCURING ACTIVITY NO.	GAEC UNIT NO.	SUB CONTR UNIT NO.
LM		LM-2 (32)	

DRAWING CHANGE REQD		DISPOSITION OF PARTS		APPROVED BY / ✓ DATE							
✓		NOT	REQD		JW 10-1466	—	—	—	FW JW 10-17		10-12-66	10/15/66
REVISE DWG	RECORD EO	REWORK	SCRAP		VDI	SUPPORT	RELIAB. GROUP	GROUP LEADER	STRESS GROUP	LIAISON ENGRG	PROJ ENGRG

PRIORITY	DRAWING TITLE	DRAWING NO	EO NO.
C	LINES INSTALLATIONS	LEO-280-	314

ISSUED BY C.H. COHEN X7033 SECTION EQUIP LINES (VDI) GROUP NO. 332 PL 35

01

NAS 9-1100

ENG 32.1 REV 3-65

GRUMMAN AIRCRAFT ENGINEERING CORP.
CODE IDENT NO. 26512
ENGINEERING ORDER

DWG. NO. LEO 280
EO NO. 377
CONTROL INFO NO. LDW 280A - 3703

TO THE FOLLOWING INSTALLATIONS ADD NOTE ✱ (✱ USE NEXT AVAIL NO)

DWG NO.	CHANGE NO	DWG NO.	CHANGE NO
LDW280-28357 ✓	A2	LDW280-52357 ✓	B3
		LDW280-52358 ✓	A2
LDW280-28360 ✓	A1	LDW280-52359 ✓	A4
		LDW280-52360 ✓	A3
		LDW280-52607	A1
LDW280-51357 ✓	A4	LDW280-53357	A1
LDW280-51358 ✓	A1	LDW280-53358	A1
LDW280-51359 ✓	A1	LDW280-53359	A1
LDW280-51360 ✓	A2	LDW280-53360	A1
LDW280-51607 ✓	A5		

✱ MS21919WDH CLAMPS & GC500S CLAMPS ARE INTERCHANGEABLE & EITHER MAY BE USED IN THIS INSTL.

DETAIL SPEC REQ ☐ CL II ENGRG CHG ☐ CL I ENGRG CHG ☐

REASON FOR EO: TO ALLOW MANUFACTURING TO SWITCH OVER TO THE REVISED ELECTRONIC CLAMP.

DESCRIPTION OF EO: TO SH 3 ADDED NOTE ✱

GAEC EO RELEASE: FR 12/2/6

MODEL	PROCURING ACTIVITY NO.	GAEC UNIT NO.	SUB CONTR UNIT NO.
LM		LTA-8 (18)	LM-3 (33)
		LM-1 (31)	
		LM-2 (32)	

DRAWING CHANGE REQD: REVISE DWG ✓ RECORD EO

DISPOSITION OF PARTS: NOT REQD — REWORK / SCRAP

APPROVED BY		—	—	—				
DATE	11/22/66						11 29 66	11-29 66
/	YD1	SUPPORT	RELIAB. GROUP	GROUP LEADER	STRESS GROUP	LIAISON ENGRG	PROJ ENGRG	~~GOVT~~

PRIORITY: C
DRAWING TITLE: LINES INSTL. - ELEC.
DRAWING NO.: LEO 280
EO NO.: 377

ISSUED BY C.H. COHEN X7033 SECTION EQUIP LINES GROUP NO. 332 PL 35

01
NAS 9-1100

ENG 33.2 REV 3.65

GRUMMAN AIRCRAFT ENGINEERING CORP.
CODE IDENT NO. 26512
ENGINEERING ORDER

DWG. NO.	LDW280-52360	EO NO.	A4
CONTROL INFO NO.	LDW280A-3972		

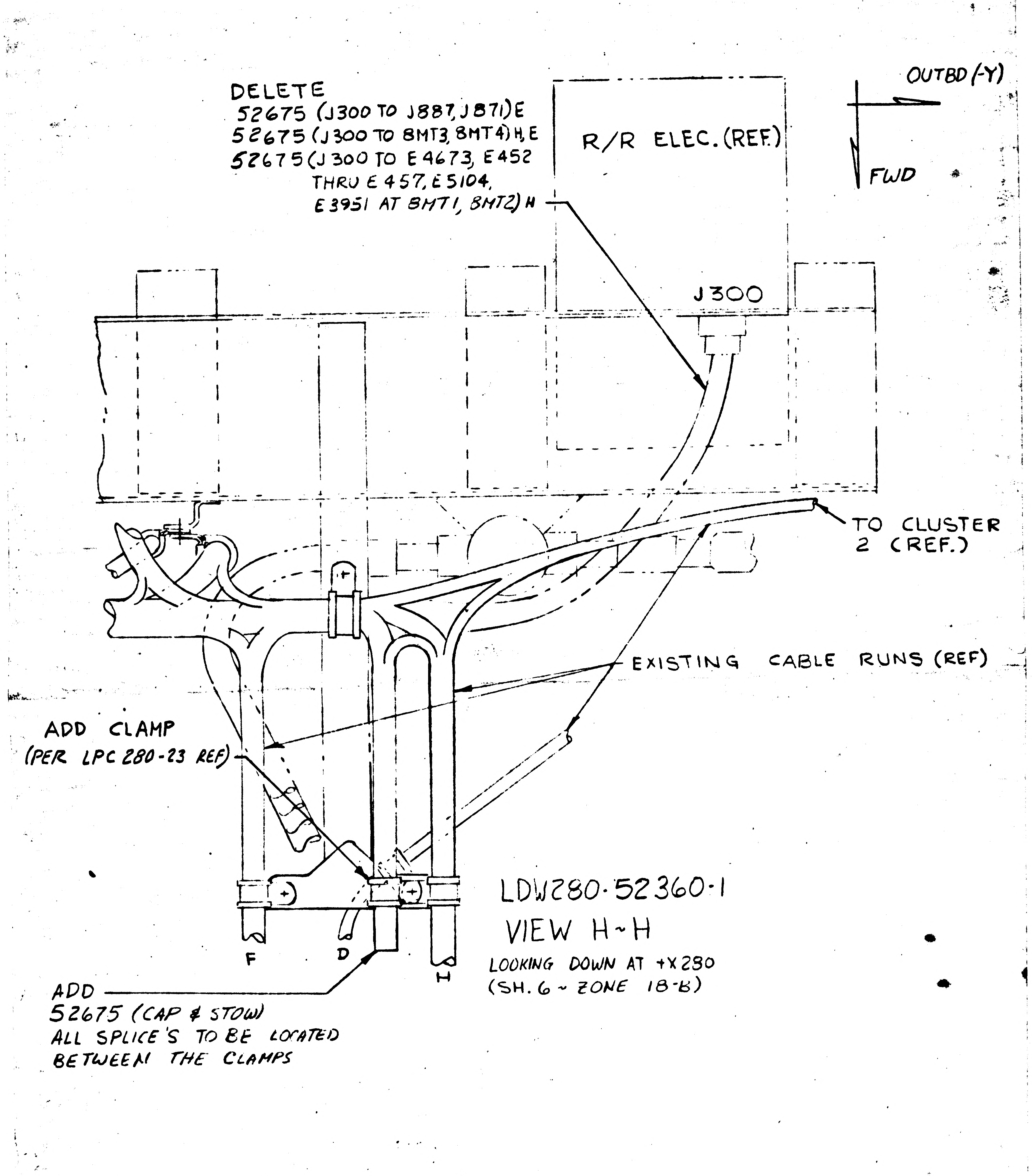

DELETE
52675 (J300 TO J887, J871)E
52675 (J300 TO 8MT3, 8MT4)H, E
52675 (J300 TO E4673, E452
THRU E457, E5104,
E3951 AT 8MT1, 8MT2) H

TO CLUSTER 2 (REF.)

EXISTING CABLE RUNS (REF)

ADD CLAMP
(PER LPC 280-23 REF)

ADD
52675 (CAP & STOW)
ALL SPLICE'S TO BE LOCATED
BETWEEN THE CLAMPS

LDW280-52360-1
VIEW H-H
LOOKING DOWN AT +X280
(SH. 6 ~ ZONE 18-B)

5

DETAIL SPEC REQ		CL II ENGRG CHG		CL I ENGRG CHG		LCR #667							
REASON FOR EO: PROVISIONS FOR STOWING CABLE REQD DUE TO REMOVAL OF DISCONNECT BKT				DESCRIPTION OF EO: ON -1 INSTL SH 6 ZONE 18-B CORRECTED PICTURE TO SHOW -52675 STOWED. WAS ROUTED TO J300								GAEC EO RELEASE	FR 12/13/6
MODEL	EFFECTIVITY			DRAWING CHANGE REQD		DISPOSITION OF PARTS		APPROVED BY	JW	—	—	—	JY
	PROCURING ACTIVITY NO.	GAEC UNIT NO.	SUB CONTR UNIT NO.					DATE	12/6/66				12/7
LM		LM-2 (32)		✓ REVISE DWG	RECORD EO	✓ REWORK	SCRAP	2	VDI	SUPPORT	RELIAB. GROUP	GROUP LEADER	STRESS GROUP
				PRIORITY: C	DRAWING TITLE: LINES INSTALLATION ELECTRONIC A/S - AFT EQUIP BAY					DRAWING NO. LDW280-52360			EO NO. A4

LIAISON ENGRG	PROJ ENGRG 12-7-66	~~GOVT~~ 12-12-66

ISSUED BY C.H. COHEN X7033 SECTION EQUIP. LINES (VDI) GROUP NO. 232 PL 35

01
NAS 9-1100

NG 32 2 REV

ENGINEERING ORDER

LDW [illegible] A5
LM [illegible] E-11440

RELEASED BY LIAISON

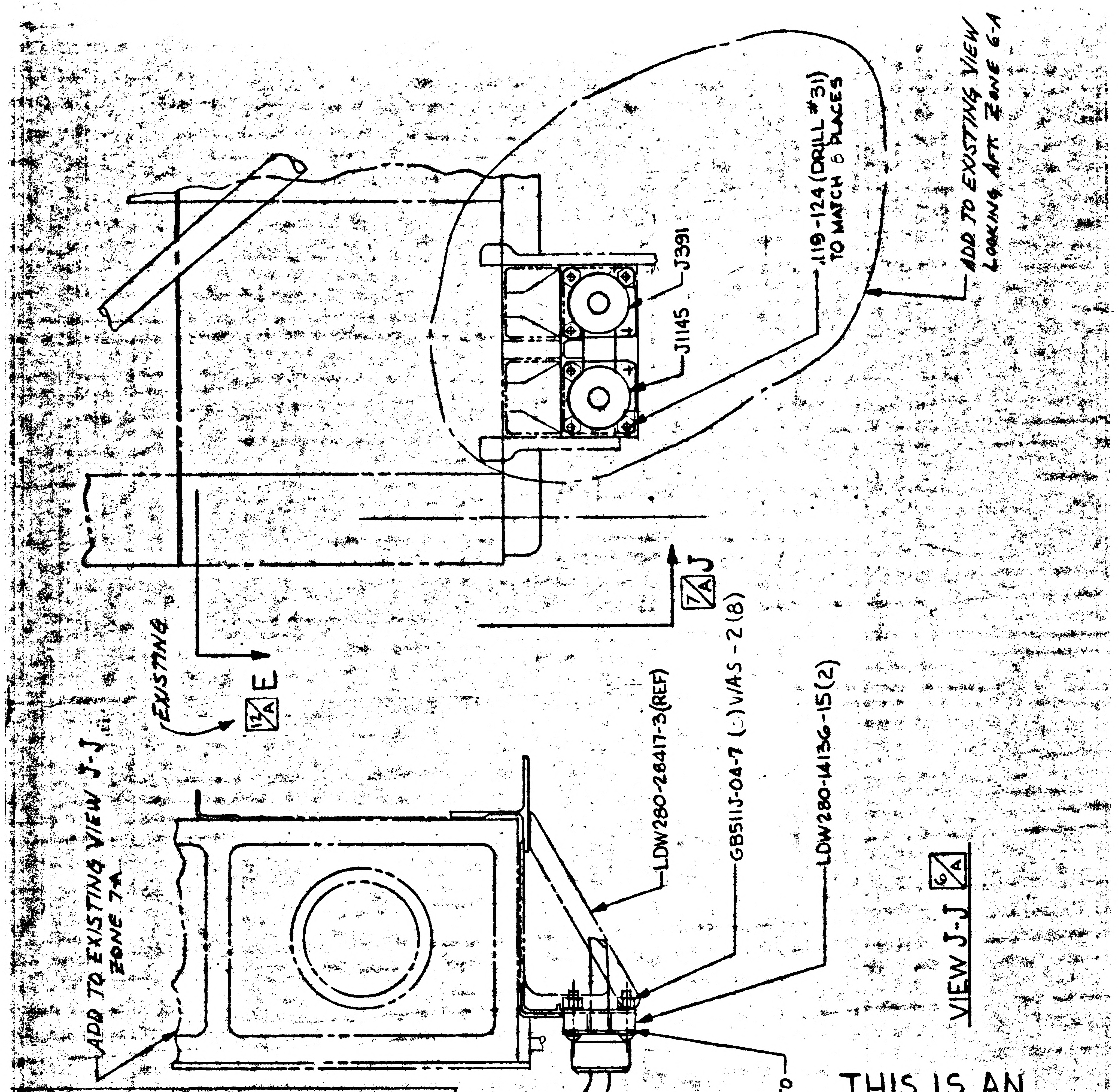

.119-.124 (DRILL #31) TO MATCH 8 PLACES
J391
J1145
ADD TO EXISTING VIEW LOOKING AFT ZONE 6-A
7A J
EXISTING
12A E
ADD TO EXISTING VIEW J-J ZONE 7A
LDW280-28417-3(REF)
GB511J-04-7 ( )WAS -2(8)
LDW280-14136-15(2)
VIEW J-J 6A
MOUNT CONN. TO THIS SURFACE

THIS IS AN ORIGINAL E.O.

~~ON SHT 2.00 -~~
~~GB511J-04-2 220 REQ'D WAS 228~~
~~MS3600-4L 448 REQ'D WAS 452~~
~~ADD GB511J-04-7 6 REQ'D~~
~~ON SHT 2.01 -~~
~~MS21042L04 226 REQ'D WAS 228~~

POST FEAT (5)

DETAIL SPEC REQ		CL II ENGRG CHG		CL I ENGRG CHG	

REASON FOR EO	DESCRIPTION OF EO	GAEC EO RELEASE
INTERFERENCE WITH SIG. PROC. CONN.	TO [illegible] LDW280-14136-15(2), DRILL #31 (8) HOLES, + GB511J-04-7 [illegible]	C VE

MODEL	PROCURING ACTIVITY NO.	GAEC UNIT NO.	SUB CONTR UNIT NO.	DRAWING CHANGE REQD: REVISE DWG	RECORD EO	DISPOSITION OF PARTS: REWORK	SCRAP	APPROVED BY / DATE		SUPPORT	RELIAB. GROUP	GROUP LEADER	STRESS GROUP	LIAISON ENGRG	PROJ ENGRG	GOVT
LM		LM-2 (32)		✓		✓		I	JW/EHC 12/14/66 VDI			~ ~	WPB 12/9	CH 12-19	RMC 12-20-66	[illegible] 12/21/66

PRIORITY	DRAWING TITLE	DRAWING NO.	EO NO.
C	ELECTRONIC CABLE INSTALLATION	LDW28C-52360	A5

ISSUED BY A.MARCUS 7033 SECTION V.D.I. GROUP NO. 332 PL 5

01

NAS 9-1100

ENG 32 1 REV 3-65

GRUMMAN AIRCRAFT ENGINEERING CORP.
CODE IDENT NO. 26512
ENGINEERING ORDER

DWG NO LDW280-52360 | EO NO Δ6

CONTROL INFO NO LDW280-4743

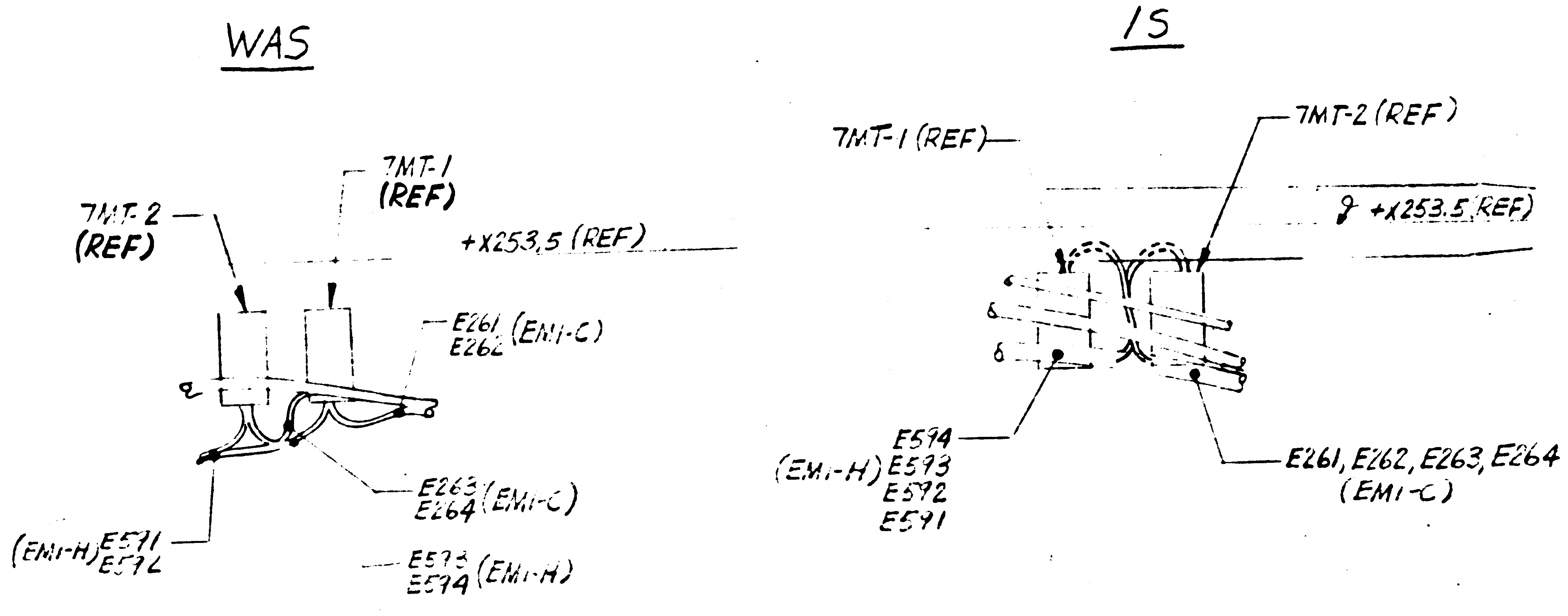
WAS
7MT-2 (REF)
7MT-1 (REF)
+X253.5 (REF)
E261 E262 (EMI-C)
E263 E264 (EMI-C)
(EMI-H) E591 E592
E593 E594 (EMI-H)
IS
7MT-1 (REF)
7MT-2 (REF)
+X253.5 (REF)
E594 E593 E592 E591 (EMI-H)
E261, E262, E263, E264 (EMI-C)

-327.0 BHD ~ LKG FWD RH

SH 9

5

DETAIL SPEC REQ	☐	CL II ENGRG CHG	☑	CL I ENGRG CHG	☐

REASON FOR EO	DESCRIPTION OF EO	GAEC EO RELEASE
TRANSDUCERS IMPROPERLY IDENTIFIED	ON SH 9 REVERSE CALL-OUTS FOR XDUCERS 7MT-1 & 7MT-2 & SPLICES E261, THRU E264, E591 THRU E594	1/10/7

MODEL	PROCURING ACTIVITY NO	GAEC UNIT NO	SUB CONTR UNIT NO
LM		LM-2 (32)	

DRAWING CHANGE REQD: REVISE DWG	RECORD EO	DISPOSITION OF PARTS: REWORK	SCRAP
✓		✓	

		SUPPORT	RELIAB GROUP	GROUP LEADER	STRESS GROUP	LIAISON ENGRG	PROJ ENGRG	
APPROVED BY	JW	—	—	—	—		RME	
DATE	1/6/67 VDI						1-9-67	1-9-67

PRIORITY	DRAWING TITLE	DRAWING NO	EO NO
C	ELECTRONIC CABLE INSTL ~ AFT BHD	LDW280-52360	Δ6

ISSUED BY E. SALAGE X7034

SECTION VDI (EQUIP LINES) GROUP NO. 332 PL 35

01 NAS 9-1100

GRUMMAN AIRCRAFT ENGINEERING CORP.
CODE IDENT NO. 26512
ENGINEERING ORDER

DWG. NO. LDW280-52360 EO NO. A7
CONTROL INFO NO. LDW280A-4747

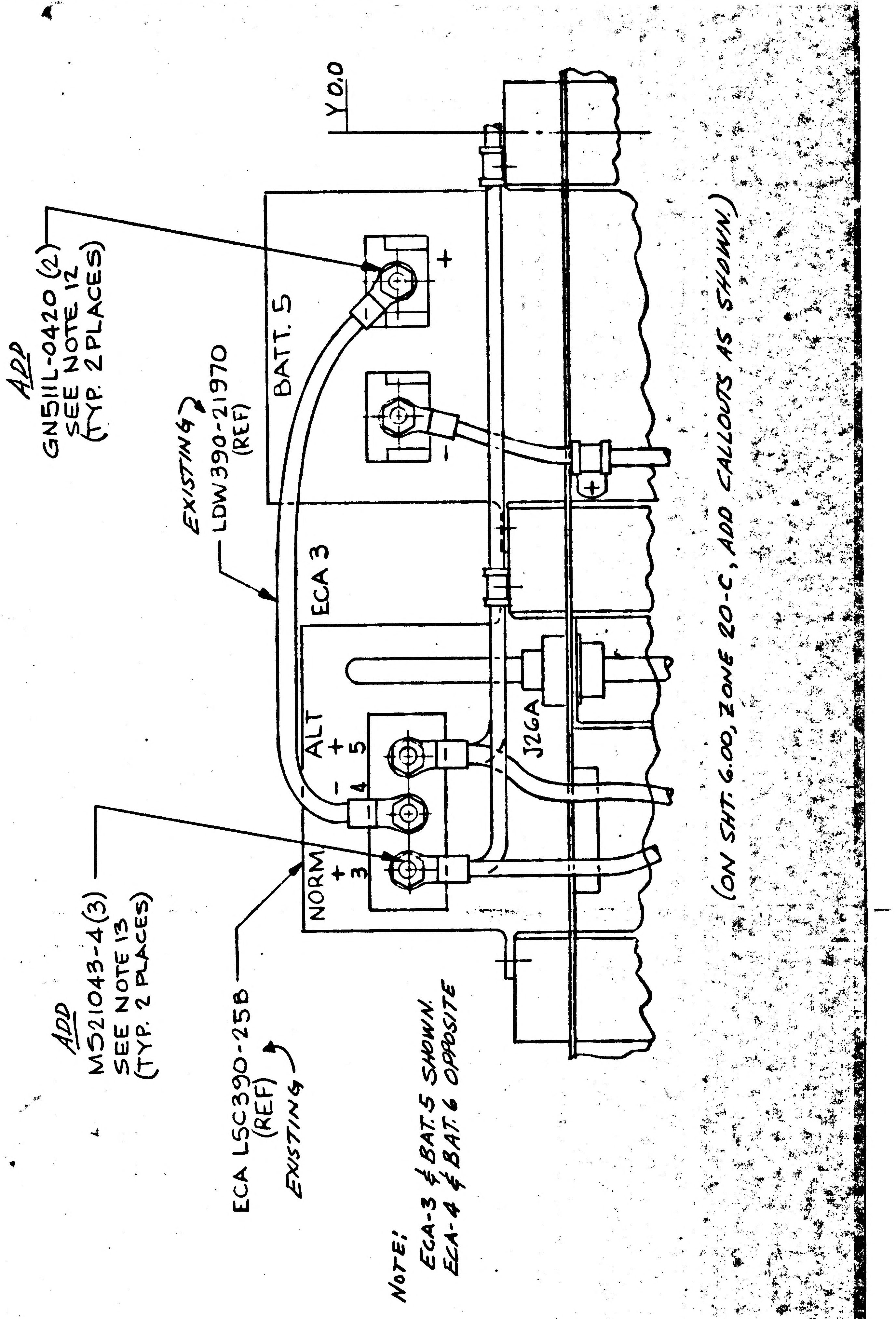
Y0.0
ADD
GN511L-0420 (2)
SEE NOTE 12
(TYP. 2 PLACES)
EXISTING
LDW390-21970
(REF)
BATT. 5
+
-
ECA 3
ALT
+ 5
- 4
+ 3
NORM
J26A
ADD
MS21043-4(3)
SEE NOTE 13
(TYP. 2 PLACES)
ECA LSC390-25B
(REF)
EXISTING

NOTE:
ECA-3 & BAT. 5 SHOWN.
ECA-4 & BAT. 6 OPPOSITE

(ON SHT. 6.00, ZONE 20-C, ADD CALLOUTS AS SHOWN.)

ON SHT. 2.01 ADD; GN511L-0420 NUT GRUMMAN STD
ON SHT. 3.00 ADD THE FOLLOWING NOTES;
12. TORQUE GN511L-0420 NUTS ON BATTERIES #5 AND #6 TO 20±5 INCH POUNDS.
13. TORQUE MS21043-4 NUTS ON ECA #3 AND #4 (TERMINALS 3, 4 & 5) TO 60±5 INCH POUNDS.

DETAIL SPEC REQ		CL II ENGRG CHG		CL I ENGRG CHG	

REASON FOR EO	DESCRIPTION OF EO	GAEC EO RELEASE
BATTERY TERMINAL STUDS HAVE NON-STANDARD THREADS.	ON SHT. 6.00, ZONE 20-C ADDED CALLOUTS (2). ON SHT. 2.01 ADDED GN511L-0420 NUT ON SHT. 3.00 ADDED NOTES 12 & 13.	1/10/67

MODEL	EFFECTIVITY		
	PROCURING ACTIVITY NO.	GAEC UNIT NO.	SUB CONTR UNIT NO.
LM	LM-2 (32)		

DRAWING CHANGE REQD		DISPOSITION OF PARTS										
✓		✓		APPROVED BY		—	—	—	JAB			
				DATE	1/9/67				1/9/67		1-9-67	1-9-67
REVISE DWG	RECORD EO	REWORK	SCRAP	1	VDI	SUPPORT	RELIAB. GROUP	GROUP LEADER	STRESS GROUP	LIAISON ENGRG	PROJ ENGRG	

PRIORITY	DRAWING TITLE	DRAWING NO.	EO NO.
C	LINES INSTALLATION ELECTRONIC A/S AFT. EQUIP. BAY.	LDW280-52360	A7

ISSUED BY A. MARCUS X7033 SECTION VDI EQUIP. LINES GROUP NO. 332

B

ENG 32.1 REV 3-65

GRUMMAN AIRCRAFT ENGINEERING CORP.
CODE IDENT NO. 26512
ENGINEERING ORDER

DWG. NO. LEO 280
EO NO. 456
CONTROL INFO NO. LDW280A 5149

ADD THE FOLLOWING NOTE * FOR THE -1 INSTL. OF THE DRAWINGS LISTED BELOW.

* REMOVE DUST CAP FROM J882 GSE CONNECTOR ON P.C.M.
REPLACE SCREW & TORQUE TO 6.5 INCH POUNDS.

(* = USE NEXT AVAILABLE NUMBER.)

DRAWING NUMBER	EFFECTIVITY	CHANGE NUMBER
✓ LDW280-28360	LTA-8 (18)	A4
✓ LDW280-51360	LM-1 (31)	A9
LDW280-52360	LM-2 (32)	A8
LDW280-53360	LM-3 (33)	A5

5

DETAIL SPEC REQ	☐	CL II ENGRG CHG	☐	CL I ENGRG CHG	☐

REASON FOR EO: TO PREVENT FREE HANGING DUST CAP FROM DAMAGING NEAR BY STRUCTURE & SKIN.

DESCRIPTION OF EO: ADDED NOTE *

GAEC C EO RELEASE: FR 1/24/67

MODEL	EFFECTIVITY: PROCURING ACTIVITY NO.	GAEC UNIT NO.	SUB CONTR UNIT NO.
LM		NOTED	

DRAWING CHANGE REQD: REVISE DWG	RECORD EO	DISPOSITION OF PARTS: REWORK	SCRAP
✓			

APPROVED BY	JaP			JW/CHC	B W			
DATE	1/23/67			1-23-67	1/23		1/23/67	1-24-67
1	VDI	SUPPORT	RELIAB. GROUP	GROUP LEADER	STRESS GROUP	LIAISON ENGRG	PROJ ENGRG	GOVT

PRIORITY	DRAWING TITLE	DRAWING NO.	EO NO.
C	LINES INST'L. ELECTRONIC AFT. RACK	LEO 280	456

ISSUED BY A. MARCUS x1441 SECTION V.D.I. EQUIP. LINES GROUP NO. 332 PL 35

01 NAS 9-1100

01

NAS 9-1100

ENG 3… REV 2-65

GRUMMAN AIRCRAFT ENGINEERING CORP.
CODE IDENT NO. 26512
ENGINEERING ORDER

DWG. NO. LDW280-52-60	EO NO. A9
CONTROL INFO NO. LDW280A-5109	

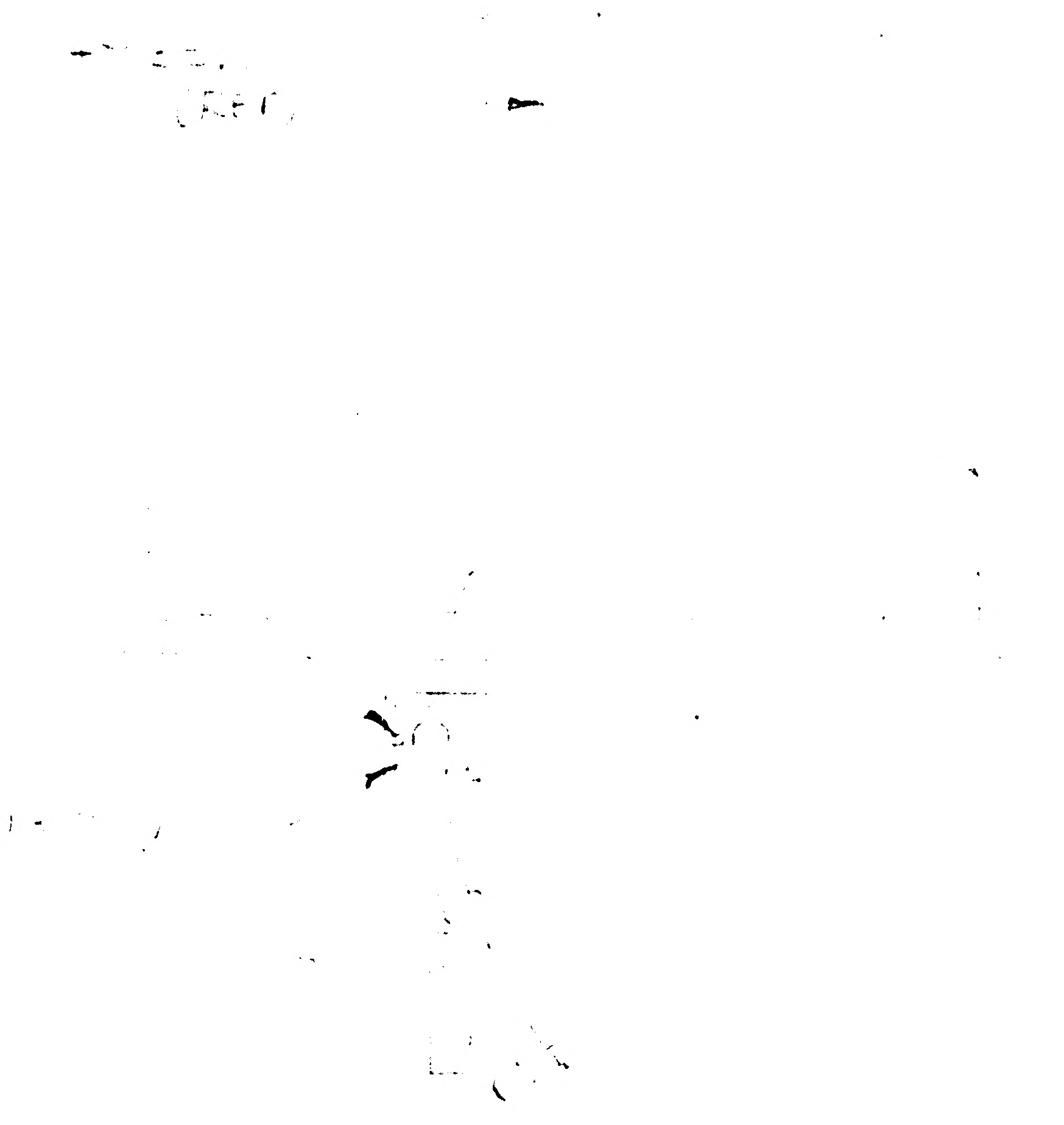

ADD:
LOCATE KEYWAY
AS SHOWN

LDW 280 52…

…

-2 …

(ZONE …)

5

DETAIL SPEC REQ		CL II ENGRG CHG		CL I ENGRG CHG	

REASON FOR EO	DESCRIPTION OF EO
TO PROPERLY INSTALL RECEPTACLE TO MATCH PIGTAIL PLUG ON S BAND TRANSCEIVER	IN F/D … ADDED … LOCATE KEYWAY AS SHOWN

GAEC EO RELEASE	E 2/6/7

MODEL	EFFECTIVITY: PROCURING ACTIVITY NO.	EFFECTIVITY: GAEC UNIT NO	EFFECTIVITY: SUB CONTR UNIT NO
LM		LM-2 (32)	

DRAWING CHANGE REQD: REVISE DWG	RECORD EO	DISPOSITION OF PARTS: REWORK	SCRAP
✓		✓	

APPROVED BY	Jap	-	-	JW / CHC	CW		…C	
DATE	2/2/67			2-2-67	2-2-67		2-3-67	2/6/67
1	VDI	SUPPORT	RELIAB GROUP	GROUP LEADER	STRESS GROUP	LIAISON ENGRG	PROJ ENGRG	

PRIORITY	DRAWING TITLE	DRAWING NO	EO NO
2	LINES INSTL … ELECTRONICS …	LDW280-52…	A9

ISSUED BY… SECTION … GROUP NO… PL…

ENG 32.1 REV 3-65

B

GRUMMAN AIRCRAFT ENGINEERING CORP.
CODE IDENT NO. 26512
ENGINEERING ORDER

DWG. NO. LED280
EO NO. 468
CONTROL INFO NO. LDW280A5258

TO THE FOLLOWING INSTALLATIONS ADD NOTE * (* USE NEXT AVAIL NO.)

DRAWING NUMBER	CHANGE NO.	EFF
LDW280-28360 ✓	A6	LTA-8(18)
LDW280-28607	A6	
LDW280-51360	B1	LM-1 (31)
LDW280-51607	D4	
LDW280-52360	A10	LM-2(32)
LDW280-52607	A10	

DRAWING NUMBER	CHANGE NO.	EFF
LDW280-53360	A7	LM-3(33)
LDW280-53607	A8	

* UPON INSTALLATION OF TERMINAL LUGS ON BATTERIES, ECA'S AND CIRCUIT BREAKERS IMMEDIATELY CONFORMAL COAT AS FOLLOWS:

a) APPLY PRIMER PER LSP-14-14201. CARE MUST BE TAKEN NOT TO APPLY TOO HEAVY A COAT OF PRIMER.

b) AFTER ALLOWING A MINIMUM OF 30 MINUTES DRYING TIME FOR PRIMER, MIX (EC1663A/B) SEALANT COMPOUND PER LSP-14-14201 & APPLY FIRST COATING OVER ALL EXPOSED SURFACES.

c) AFTER FIRST COATING CURES, APPLY SECOND & THIRD COAT OF SAME SEALANT COMPOUND, ALLOWING 24 HOURS CURING TIME BETWEEN COATS PER LSP-14-14201.
NOTE: CARE MUST BE TAKEN THAT EACH COAT COMPLETELY COVERS PRECEEDING COAT & ANY EXPOSED PRIMER.

(5)

DETAIL SPEC REQ ☐ CL II ENGRG CHG ☑ CL I ENGRG CHG ☐

REASON FOR EO: TO PROVIDE PROTECTION FOR ELECTRICAL TERMINALS

DESCRIPTION OF EO: TO SH 3 ADD NOTE *

GAEC EO RELEASE: 2/8/7

MODEL	PROCURING ACTIVITY NO.	GAEC UNIT NO.	SUB CONTR UNIT NO.
LM		NOTED ABOVE	

DRAWING CHANGE REQD: REVISE DWG ✓ RECORD EO
DISPOSITION OF PARTS: REWORK ✓ SCRAP

APPROVED BY										
DATE	1/27/67	2/7/67		1-27-67	1/27/67		~~2-3-67~~	2-8-67
1	VDI	~~SUPPORT~~ MAT'L	RELIAB. GROUP	GROUP LEADER	STRESS GROUP	LIAISON ENGRG	PROJ ENGRG	GOVT

PRIORITY: C
DRAWING TITLE: LINES INSTL. ~ ELEC
DRAWING NO.: LEO280
EO NO.: 468

ISSUED BY R. EBERLE X1441 SECTION VDI (EQUIP LINES) GROUP NO. 332 PL 35

01 NAS 9-1100

NAS 9-1100

01

GRUMMAN AIRCRAFT ENGINEERING CORP.
CODE IDENT NO 26512
ENGINEERING ORDER

DWG NO LDW280-52360
CONTROL INFO NO LDW280A-53115
EO NO B1

B

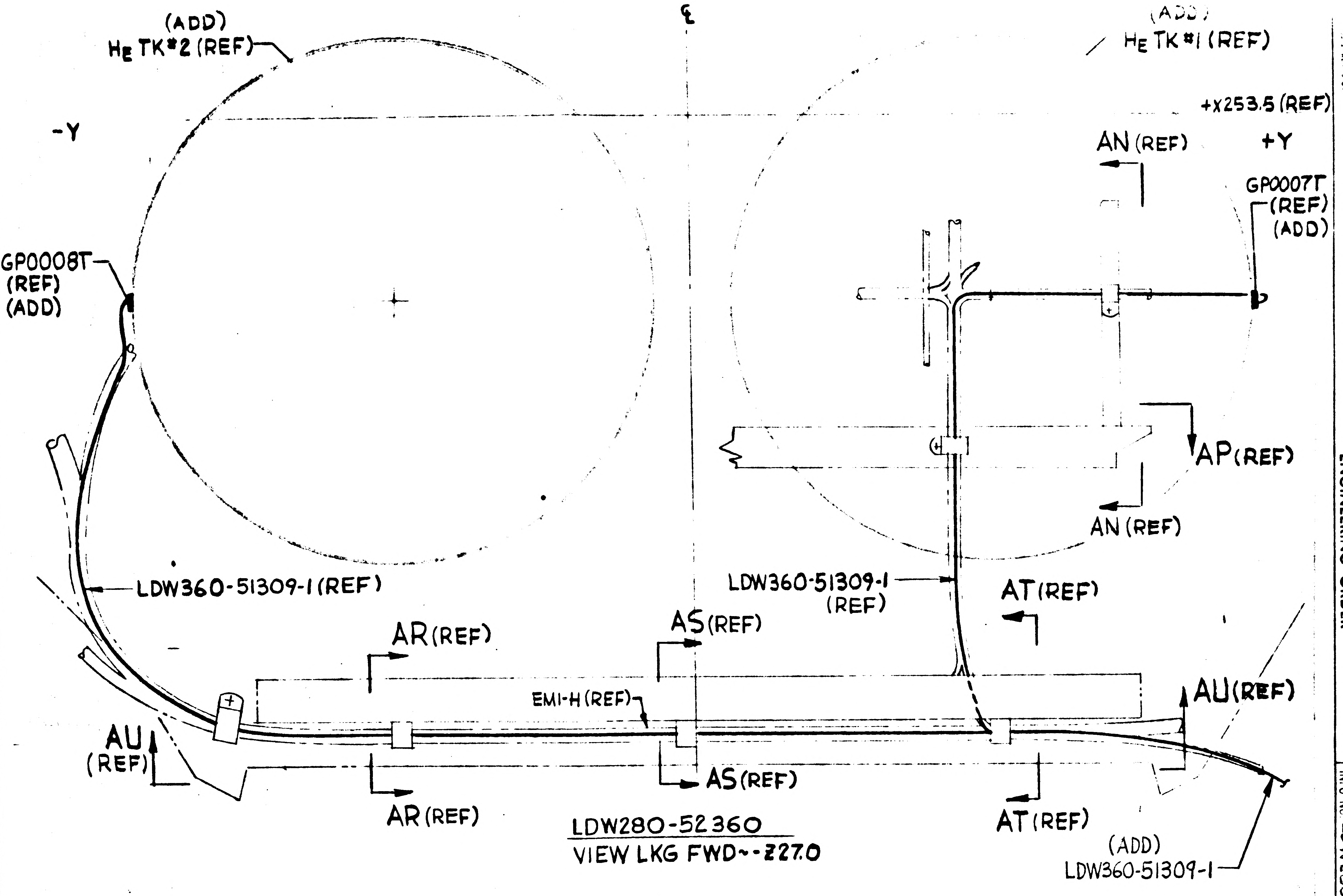

(ADD)
HE TK#2 (REF)
(ADD)
HE TK#1 (REF)
℄
+X253.5 (REF)
-Y
+Y
AN (REF)
GP0007T
(REF)
(ADD)
GP0008T
(REF)
(ADD)
AP (REF)
AN (REF)
LDW360-51309-1 (REF)
LDW360-51309-1
(REF)
AT (REF)
AS (REF)
AR (REF)
EMI-H (REF)
AU (REF)
AU
(REF)
AS (REF)
AR (REF)
AT (REF)
(ADD)
LDW360-51309-1

LDW280-52360
VIEW LKG FWD--227.0

ADD LDW360-51309-1 INSTL TO FLD & B/M
ADD ROUTING AS SHN (RUN WITH EXIST EMI-H)
ADD TO VIEWS AN-AN, AP-AP, AR-AR, AS-AS
AT-AT, AU-AU

DETAIL SPEC REQ	
REASON FOR EO	ADDITION OF LDW360-51309 INSTL PER MCR 711A
CL II ENGRG CHG	
CL I ENGRG CHG	
DESCRIPTION OF EO	NOTED ABOVE

MODEL	EFFECTIVITY		
	GAEC UNIT NO	SUB CONTR UNIT NO	
LM	LM-2 (32)		

DRAWING CHANGE REQD	DISPOSITION OF PARTS		APPROVED BY								GAEC EO RELEASE
✓	✓			—	-	JW GHC	B JV				
REVISE DWG	RECORD EO	REWORK	SCRAP	DATE							
				2/6/67		2-6-67	2/3		2/6/67	2/9/67	2/13/67
PRIORITY				2	VD1	SUPPORT	RELIAB. GROUP	GROUP LEADER	STR'SS GROUP	LIAISON ENGRG	PROJ ENGRG
C	DRAWING TITLE LINES INSTL-ELECT-A/S AFT BAY					DRAWING NO LDW280-52360					EO NO B1

ISSUED BY E. SALAGE X7033

SECTION VD1 (EQUIP LINES) GROUP NO. 332 PL 35

5

β

EMO 32.2 REV 3-66

GRUMMAN AIRCRAFT ENGINEERING CORP.
CODE IDENT NO. 26512
ENGINEERING ORDER

DWG. NO. LDW280-52360 | EO NO. B1
CONTROL INFO NO. LDW230A-5395

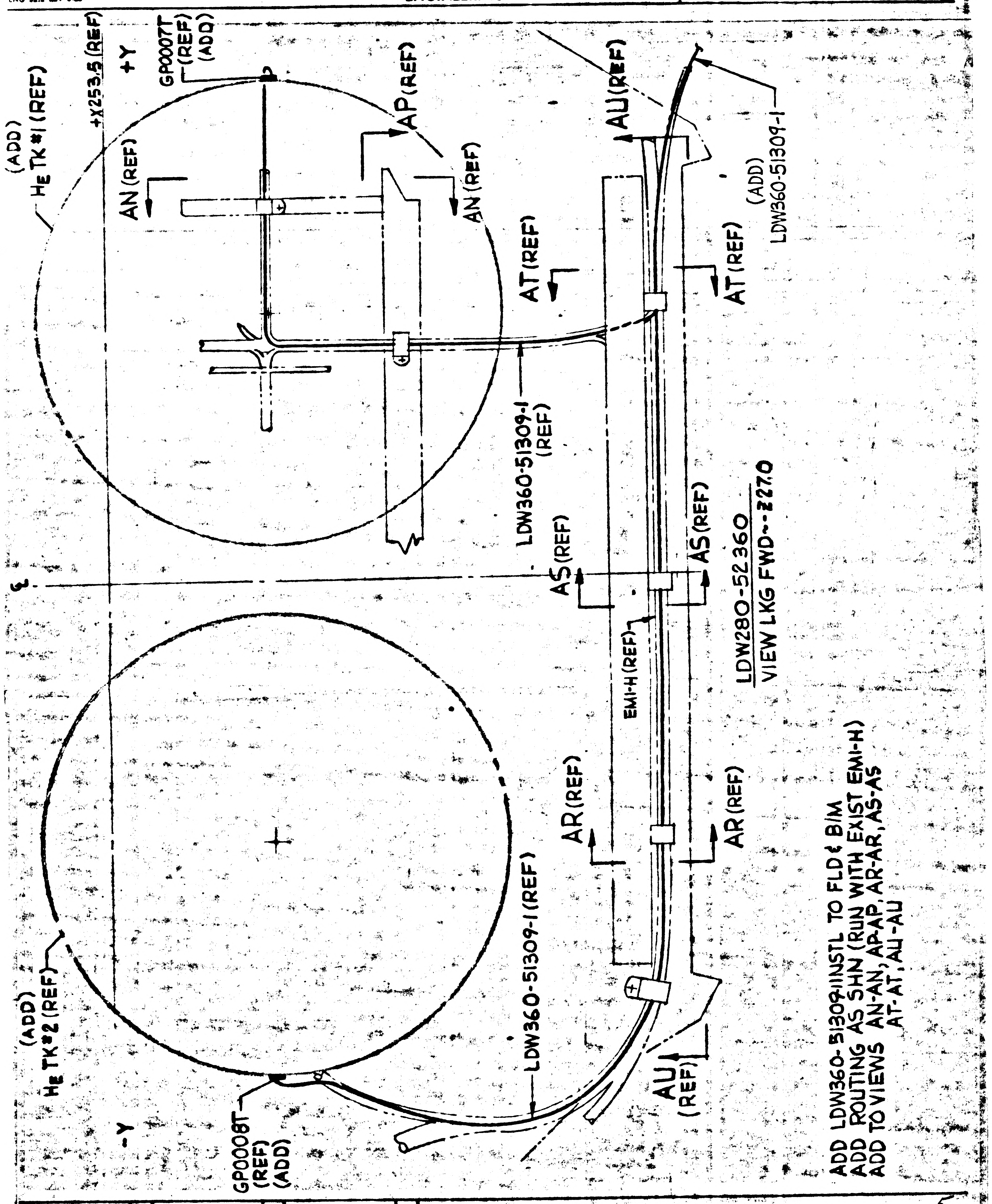
(ADD)
HE TK #1 (REF)
+X253.5 (REF)
+Y
GP0007T
(REF)
(ADD)
AP (REF)
AN (REF)
AN (REF)
AU (REF)
(ADD)
LDW360-51309-1
AT (REF)
AT (REF)
LDW360-51309-1
(REF)
AS (REF)
AS (REF)
EMI-H (REF)
AR (REF)
AR (REF)
LDW360-51309-1 (REF)
(ADD)
HE TK #2 (REF)
-Y
GP0008T
(REF)
(ADD)
AU
(REF)
3

LDW280-52360
VIEW LKG FWD--227.0

ADD LDW360-51309-1 INSTL TO FLD & B/M
ADD ROUTING AS SHN (RUN WITH EXIST EMI-H)
ADD TO VIEWS AN-AN, AP-AP, AR-AR, AS-AS
AT-AT, AU-AU

5

DETAIL SPEC REQ		CL II ENGRG CHG		CL I ENGRG CHG	

REASON FOR EO	DESCRIPTION OF EO	GAEC EO RELEASE
ADDITION OF LDW360-51309 INSTL PER MCR 711A	NOTED ABOVE	2/13/7

MODEL	PROCURING ACTIVITY NO.	GAEC UNIT NO.	SUB CONTR UNIT NO.
LM		LM-2 (32)	

DRAWING CHANGE REQD		DISPOSITION OF PARTS		APPROVED BY	Jap	—	—	JW/CHC	B JY			
✓		✓		DATE	2/6/67			2-6-67	2/8		2/9/67	2/9/67
REVISE DWG	RECORD EO	REWORK	SCRAP	2	VD1	SUPPORT	RELIAB. GROUP	GROUP LEADER	STRESS GROUP	LIAISON ENGRG	PROJ ENGRG	

PRIORITY	DRAWING TITLE	DRAWING NO.	EO NO.
C	LINES INSTL-ELECT-A/S AFT BAY	LDW280-52360	B1

ISSUED BY E. SALAGE X7033 SECTION YD1 (EQUIP LINES) GROUP NO. 332 PL 35

01
NAS 9-1100

B

ENG 32 1 REV 3-65

GRUMMAN AIRCRAFT ENGINEERING CORP.
CODE IDENT NO. 26512
ENGINEERING ORDER

DWG NO LDW280-52360
EO NO B2
CONTROL INFO NO LM-5- 12445

IN F/D SH. 4.00 ZONE 6A & 6C
ADD "SEE NOTE *" CALLOUT TO J1138, J1139 & J387

ADD NOTE * (SH 3.00)

* REMOVE DUST CAP & CHAIN FROM J1138, J1139 & J387 CONNECTORS PRIOR TO INSTALLATION OF CABLES. CUT CHAIN AT LAST LINK ATTACHED TO BOX.

RELEASED BY LIAISON

* = NEXT AVAILABLE NUMBER

DETAIL SPEC REQ ☐ CL II ENGRG CHG ☐ CL I ENGRG CHG ☐

5

REASON FOR EO: GSE CONNECTORS REQUIRED FOR R&D MEASUREMENTS DURING FLIGHT - DUST CAPS NOT REQ'D.

DESCRIPTION OF EO: IN F/D & SH 3.00 ADDED NOTE *

GAEC C EO RELEASE
J/C

MODEL	EFFECTIVITY PROCURING ACTIVITY NO.	EFFECTIVITY GAEC UNIT NO	EFFECTIVITY SUB CONTR UNIT NO
LM		LM-2 (32)	

DRAWING CHANGE REQD: REVISE DWG ✓ RECORD EO
DISPOSITION OF PARTS: REWORK ✓ SCRAP

	VDI	SUPPORT	RELIAB GROUP	GROUP LEADER	STRESS GROUP	LIAISON ENGRG	PROJ ENGRG	
APPROVED BY	JW	—	—	—	—	DV		
DATE	3/2/67					2/4	2-24-67	3/21/67

PRIORITY: 1

PRIORITY C

DRAWING TITLE: LINES INSTALLATION ELECTRONIC A/S AFT EQUIP BAY

DRAWING NO LDW280-52360

EO NO B2

ISSUED BY LIAISON D.VALENZA 6216 SECTION VDI GROUP NO. 280 PL 35

01

NAS 9-1100

B

ENG 32.2 REV 3-65

GRUMMAN AIRCRAFT ENGINEERING CORP.
CODE IDENT NO. 26512
ENGINEERING ORDER

DWG. NO. LDW280-52360		EO NO. B3	
CONTROL INFO NO. LM5-12661			

RELEASED BY LIAISON

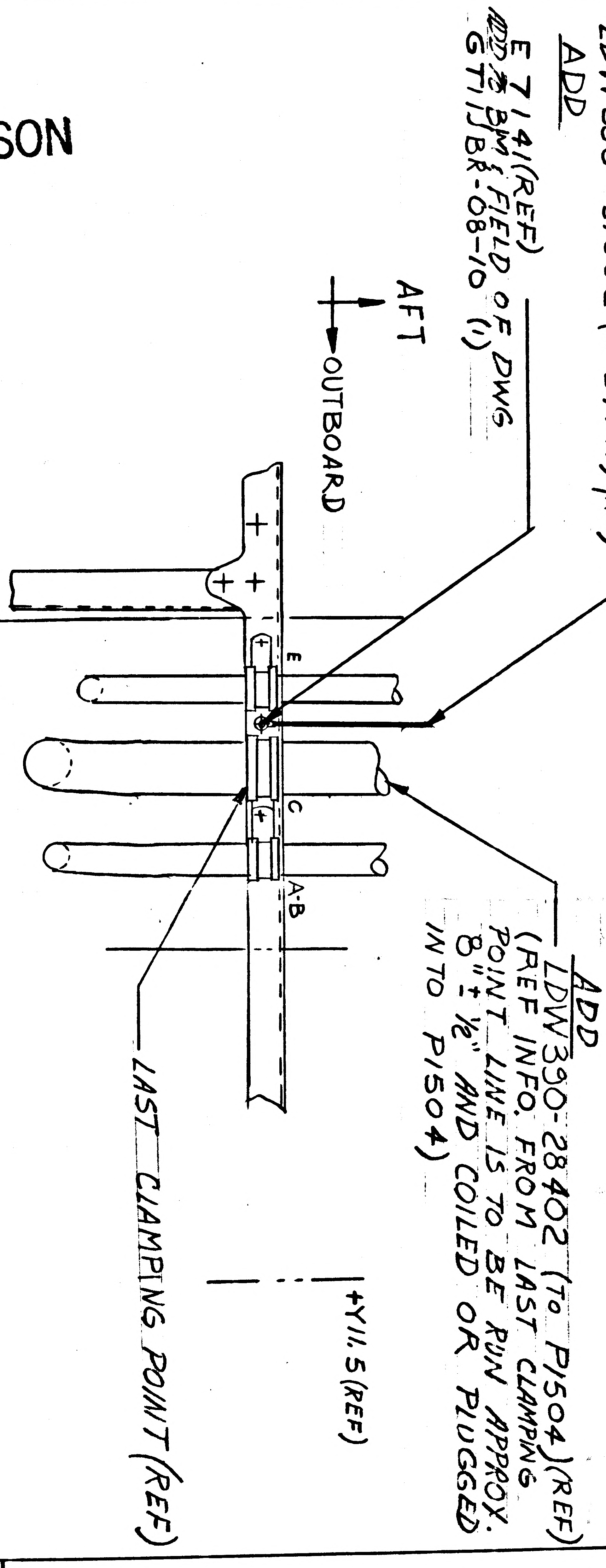

ADD
LDW390-51602 (TO E7141) (REF)
ADD
E7141 (REF)
ADD TO BM & FIELD OF DWG
GT11JBR-08-10 (1)
AFT
OUTBOARD
E
C
A-B
ADD
LDW390-28402 (TO P1504) (REF)
(REF INFO. FROM LAST CLAMPING POINT LINE IS TO BE RUN APPROX. 8" ± ½" AND COILED OR PLUGGED INTO P1504)
+Y11.5 (REF)
LAST CLAMPING POINT (REF)
±Y0.00 (REF)

LDW280-52360-1
(REF) VIEW AU-AU
LKG UP ~ +X228.00
(ZONE 38A SH 11)

01

NAS 9-1100

DETAIL SPEC REQ	☐	CL II ENGRG CHG	✓	CL I ENGRG CHG	☐

REASON FOR EO: LINE RUN ADDED TO PRESS XDUCER P1504

DESCRIPTION OF EO: ON-1 ADDED LDW390-51602 (REF) LDW390-28402 (REF) E7141 (REF) & ADDED TO B/M & F/D GT11JBR-08-10 (1)

GAEC 5 EO RELEASE: JS 3-27-7

MODEL	PROCURING ACTIVITY NO.	GAEC UNIT NO.	SUB CONTR UNIT NO.
LM		LM-2 (32)	

DRAWING CHANGE REQD: REVISE DWG	RECORD EO	DISPOSITION OF PARTS: REWORK	SCRAP	APPROVED BY / DATE
✓		✓		1

SUPPORT	RELIAB. GROUP	GROUP LEADER	STRESS GROUP	LIAISON ENGRG	PROJ ENGRG	GOVT
			JFJ 3-23-67	CH 3-21-67	RMC (E) 3-27-67	3-14-67

PRIORITY	DRAWING TITLE	DRAWING NO.	EO NO.
C	LINES INSTALLATION ELECTRONIC A/S ~ AFT. EQUIP. BAY	LDW280-52360	B3

ISSUED BY S. DARIST Ex 1154 SECTION VD1 (EQUIP LINES) GROUP NO. 332 PL 5

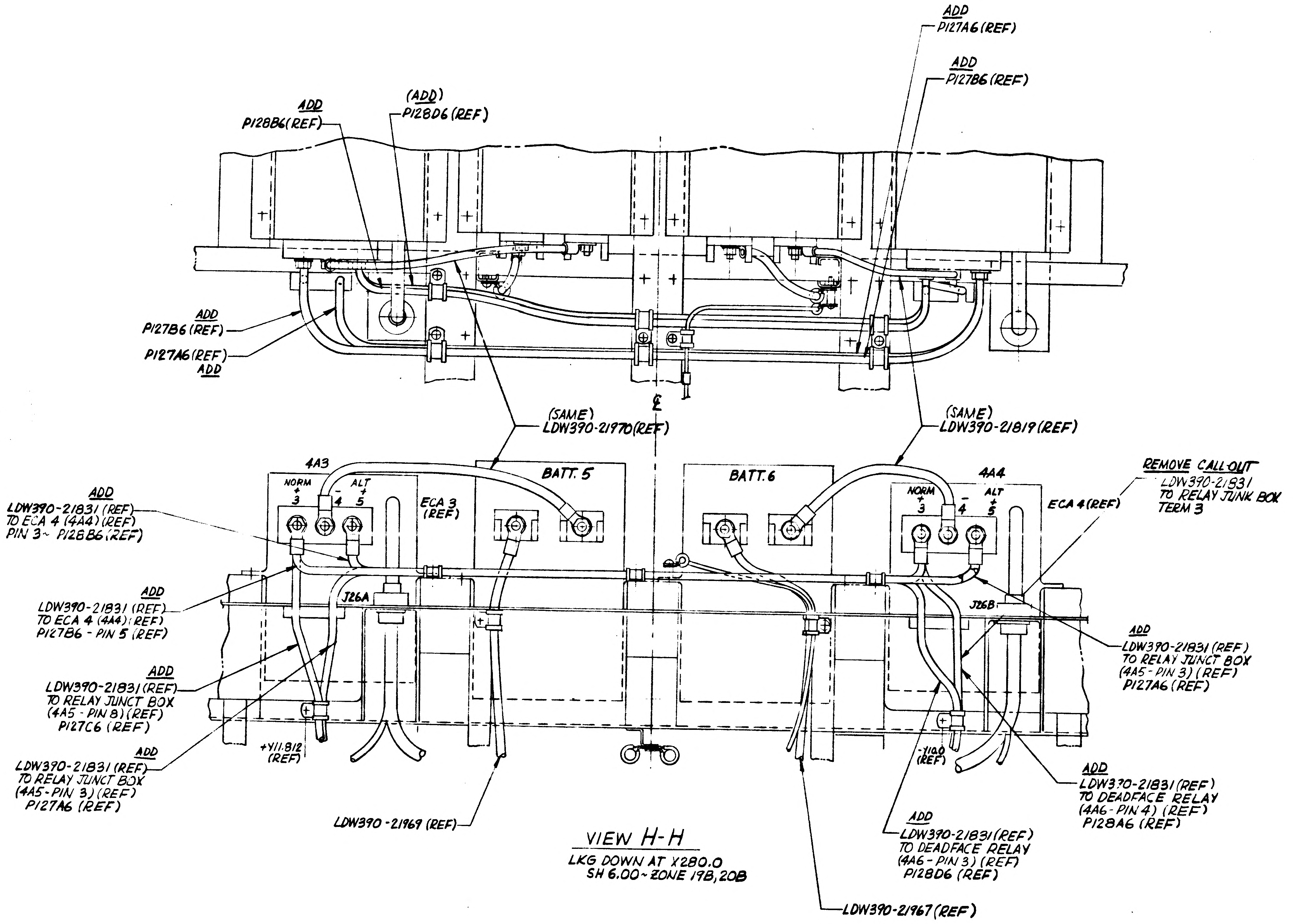
ADD
P127A6 (REF)
ADD
P127B6 (REF)
ADD
P128B6(REF)
(ADD)
P128D6 (REF)
ADD
P127B6 (REF)
P127A6 (REF)
ADD
(SAME)
LDW390-21970(REF)
(SAME)
LDW390-21819 (REF)
4A3
NORM
+
3
-
4
ALT
+
5
ECA 3
(REF)
BATT. 5
BATT. 6
4A4
ECA 4 (REF)
REMOVE CALL-OUT
LDW390-21831
TO RELAY JUNK BOX
TERM 3
ADD
LDW390-21831 (REF)
TO ECA 4 (4A4) (REF)
PIN 3~ P128B6 (REF)
ADD
LDW390-21831 (REF)
TO ECA 4 (4A4) (REF)
P127B6 - PIN 5 (REF)
ADD
LDW390-21831 (REF)
TO RELAY JUNCT BOX
(4A5 - PIN 8) (REF)
P127C6 (REF)
ADD
LDW390-21831 (REF)
TO RELAY JUNCT BOX
(4A5-PIN 3) (REF)
P127A6 (REF)
J26A
J26B
+Y11.812
(REF)
-Y11.0
(REF)
LDW390-21969 (REF)
ADD
LDW390-21831 (REF)
TO RELAY JUNCT BOX
(4A5-PIN 3) (REF)
P127A6 (REF)
ADD
LDW390-21831 (REF)
TO DEADFACE RELAY
(4A6-PIN 4) (REF)
P128A6 (REF)
ADD
LDW390-21831 (REF)
TO DEADFACE RELAY
(4A6 - PIN 3) (REF)
P128D6 (REF)
LDW390-21967 (REF)
℄

VIEW H-H
LKG DOWN AT X280.0
SH 6.00~ZONE 19B, 20B

ON SH 9.00 ~ ZONE 43A ~ EMI-C
CALL-OUT: LDW390-21831 (REF)
TO DEADFACE RELAY (4A6)
P128A6, P128D6 (REF)
WAS
LDW390-21831
(4A6-4A3, 4A4)

ON SH 10.00 - VIEW AK-AK - ZONE 44A - EMI C
ON SH 10.00 - SECT AJ-AJ - ZONE 47A
CALL-OUT: LDW390-21831 (REF)
TO DEADFACE RELAY (4A6)
P128A6, P128D6 (REF)
WAS
LDW390-21831
(4A4-4A5, 6)

LDW390-21831 (REF)
TO RELAY JUNCT BOX (4A5)
P127A6, P127C6 (REF)
WAS
LDW390-21831
(4A3-4A5, 4A6)

ON SH 11.00 - VIEW AM-AM - ZONE 54B - EMI C
DELETE CALL-OUT; LDW390-21831 (4A5-4A4)

ON SH 11.00 - VIEW AN-AN - ZONE 53B - EMI-C
CALL-OUT: LDW390-21831 (REF)
TO RELAY JUNCT BOX (4A5)
P127A6, P127C6 (REF)
WAS
LDW390-21831
(4A4-4A5)

ON SH 11.00 - VIEW AL-AL ~ ZONE 55B ~ EMI-C
CALL-OUT: LDW390-21831 (REF)
TO DEADFACE RELAY (4A6)
P128A6, P128D6 (REF)
WAS:
LDW390-21831
(4A4-4A6, 4A3)

ON SH 9.00~ ZONE 41A ~ EMI-C
CALL-OUT: LDW390-21831 (REF)
TO RELAY JUNCT BOX (4A5)
P127A6, P127C6 (REF)
WAS
LDW390-21831
(4A5-4A3, 4A4)

DETAIL SPEC REQD		CLASS II ENGRG CHG	✓	CLASS I ENGRG CHG		LCD- 1329	CONTROL INFO NO. LDW28CA-6472
REASON FOR EO				DESCRIPTION OF EO			GRUMMAN EO RELEASE C
REROUTING OF POWER CABLES REQD TO MAINTAIN SEPARATION OF SYSTEMS				NOTED ABOVE			VK 6/5/67

MODEL	EFFECTIVITY PROCURING ACT. NO.	GAEC UNIT NO.	SUB CONTR UNIT NO.
LM		LM2 (32)	

DRAWING REVISION REQD		DISPOSITION OF PARTS		BY / DATE							
✓		✓		9aP 5/26/67			JW 5/	JV 5/31/67		5/	6/5/67
REVISE DWG	RECORD EO	REWORK	SCRAP	VDI	SUPPORT	RELIAB GROUP	GROUP LEADER	STRESS GROUP	LIAISON ENGRG	PROJ ENGR	~~GOVT~~

PRIORITY	DRAWING TITLE	ENGINEERING ORDER DRAWING NO.	EO NO.
C	LINES INSTL ~ ELECTRICAL ASCENT STAGE ~ AFT BAY	LDW280-52360	B4

ISSUED BY E. SALAGE SECTION VDI (EQUIP LINES) GROUP NO. 332 PL 25 CODE IDENT NO. 26512

GRUMMAN AIRCRAFT ENGINEERING CORP
BETHPAGE, L. I., N. Y.

ENG 32.3 REV 3-65

01

NAS 9-1100

ENG 32.1 REV 3-65

GRUMMAN AIRCRAFT ENGINEERING CORP.
CODE IDENT NO. 26512
ENGINEERING ORDER

DWG. NO. LDW280-52360		EO NO. B5
CONTROL INFO NO. LDW280A-7717		

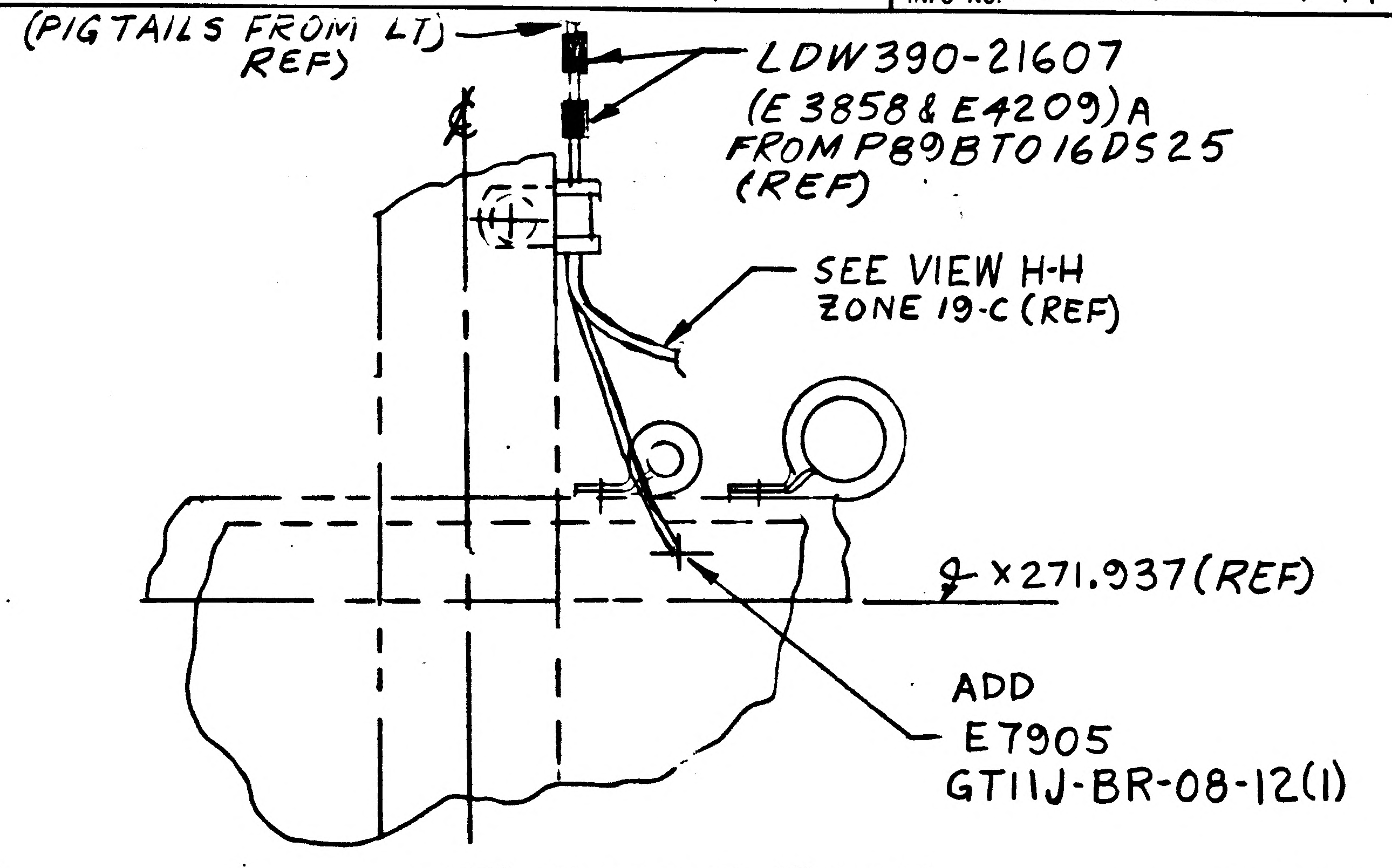
(PIGTAILS FROM LT) REF)
LDW390-21607
(E3858 & E4209) A
FROM P89 B TO 16DS25
(REF)
SEE VIEW H-H
ZONE 19-C (REF)
℄ X271.937 (REF)
ADD
E7905
GT11J-BR-08-12(1)

AFT EQUIP RACK
VIEW LKG AFT

SH 4 ZONE 4C

DETAIL SPEC REQ		CL II ENGRG CHG		CL I ENGRG CHG	✓ LCD 1694	5

REASON FOR EO	DESCRIPTION OF EO	GAEC EO RELEASE C
CORRECT EXCESSIVE VOLTAGE DROP TO DOCKING LIGHT	ON-1 ADDED E7905 IN F/D & GT11J-BR-08-12(1) IN F/D & B/M	JK 6/30/7

MODEL	EFFECTIVITY			DRAWING CHANGE REQD		DISPOSITION OF PARTS	
	PROCURING ACTIVITY NO.	GAEC UNIT NO.	SUB CONTR UNIT NO.	REVISE DWG	RECORD EO	REWORK	SCRAP
LM		LM2 (32)		✓		✓	

APPROVED BY				JW	BJV			
DATE	6/28/67			6/28/67	6/29		6/29	6/29/67
	VDI	SUPPORT	RELIAB. GROUP	GROUP LEADER	STRESS GROUP	LIAISON ENGRG	PROJ ENGRG	

PRIORITY	DRAWING TITLE	DRAWING NO.	EO NO.
C	LINES INSTALLATION ELECTRONIC ASCENT STAGE RACK	LDW280-52360	B5

ISSUED BY ROSADO x1392 SECTION EQUIP LINES GROUP NO. 332 PL 25

01

NAS 9-1100

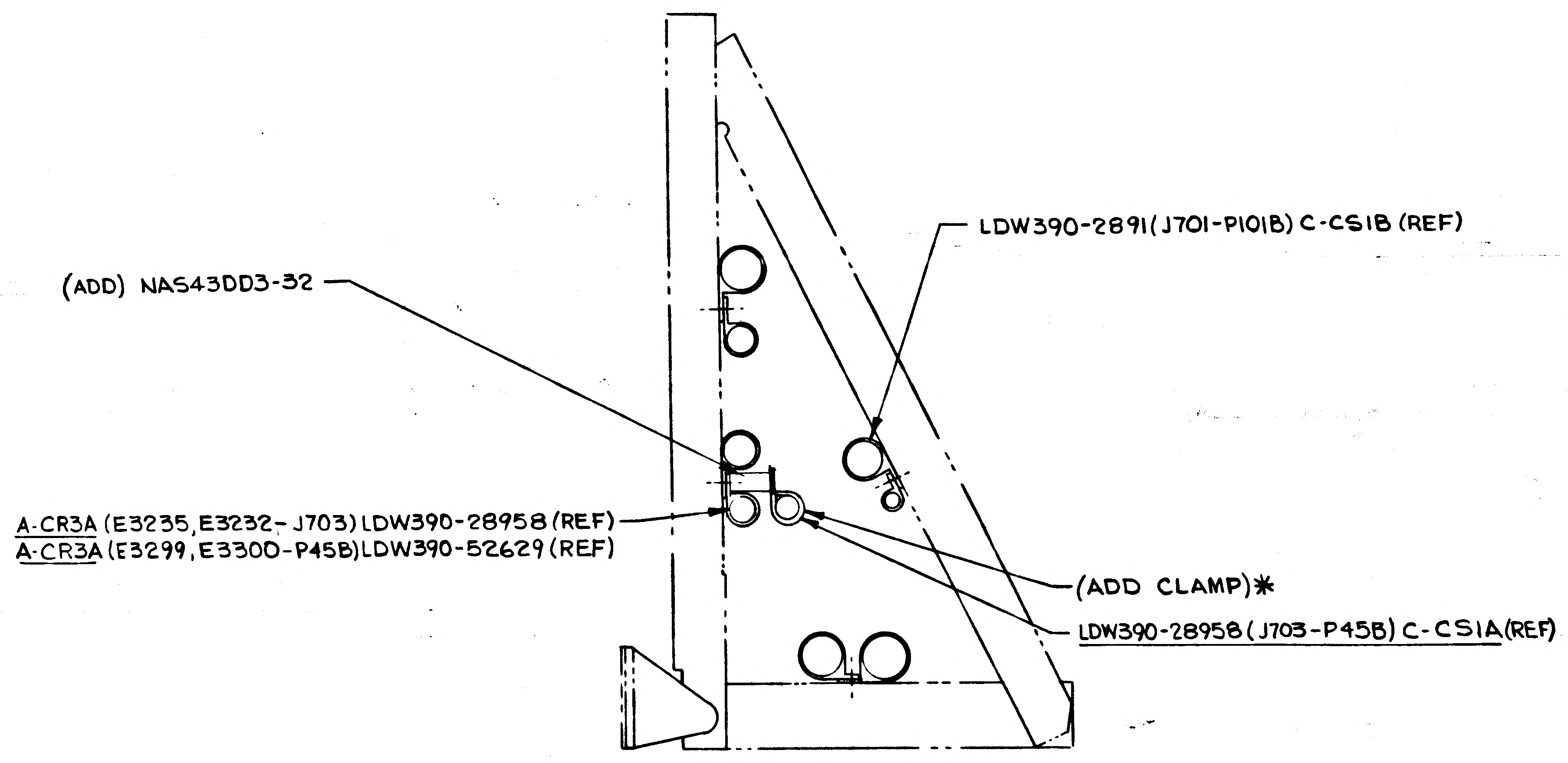
(ADD) NAS43DD3-32
LDW390-2891(J701-P101B) C-CS1B (REF)
A-CR3A (E3235, E3232 - J703) LDW390-28958 (REF)
A-CR3A (E3299, E3300-P45B) LDW390-52629 (REF)
(ADD CLAMP)*
LDW390-28958 (J703-P45B) C-CS1A(REF)

SECT AE-AE (ZONE 39B)
SH 10.00 (ZONE 48B & 47B)

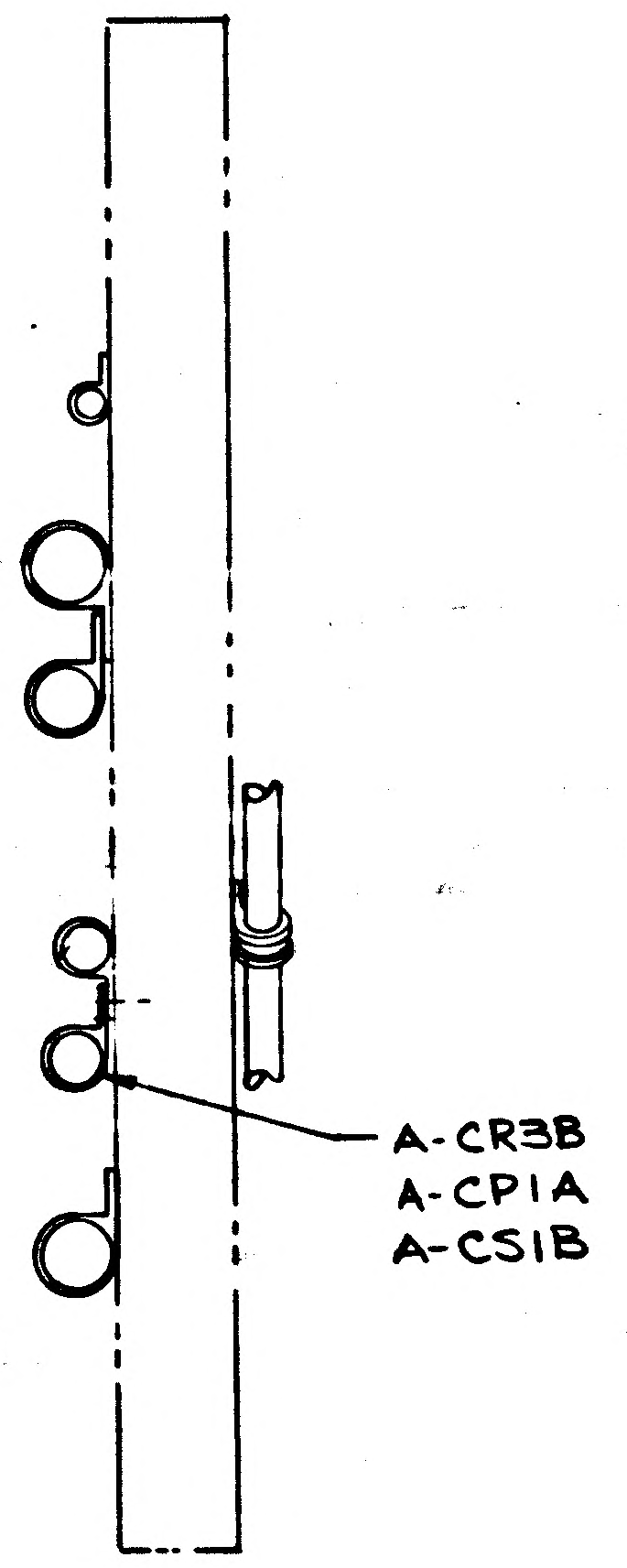
A-CR3B
A-CP1A
A-CS1B

SECT AG-AG (ZONE 38B)
LKG INBD~R.H. SIDE ~+Y5.75
SH 10.00 (ZONE 46B)

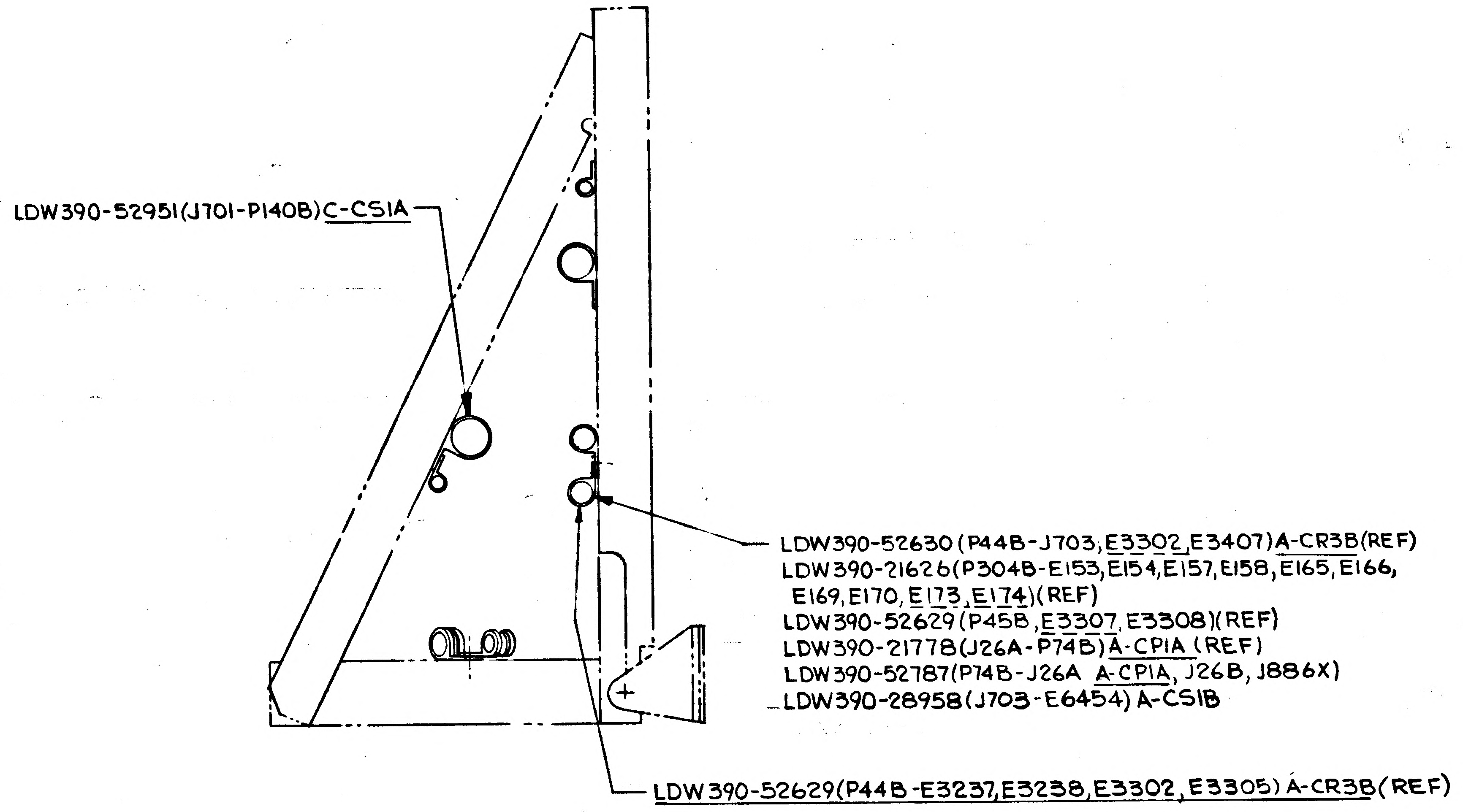
LDW390-52951(J701-P140B) C-CS1A
LDW390-52630 (P44B-J703, E3302, E3407) A-CR3B(REF)
LDW390-21626(P304B-E153, E154, E157, E158, E165, E166,
E169, E170, E173, E174)(REF)
LDW390-52629 (P45B, E3307, E3308)(REF)
LDW390-21778(J26A-P74B) A-CP1A (REF)
LDW390-52787(P74B-J26A A-CP1A, J26B, J886X)
LDW390-28958(J703-E6454) A-CS1B
LDW390-52629(P44B-E3237, E3238, E3302, E3305) A-CR3B(REF)

VIEW AH-AH (ZONE 38B)
LKG INBD~R.H. SIDE +Y17.25
SH.10.00 (ZONE 44B & 45B)

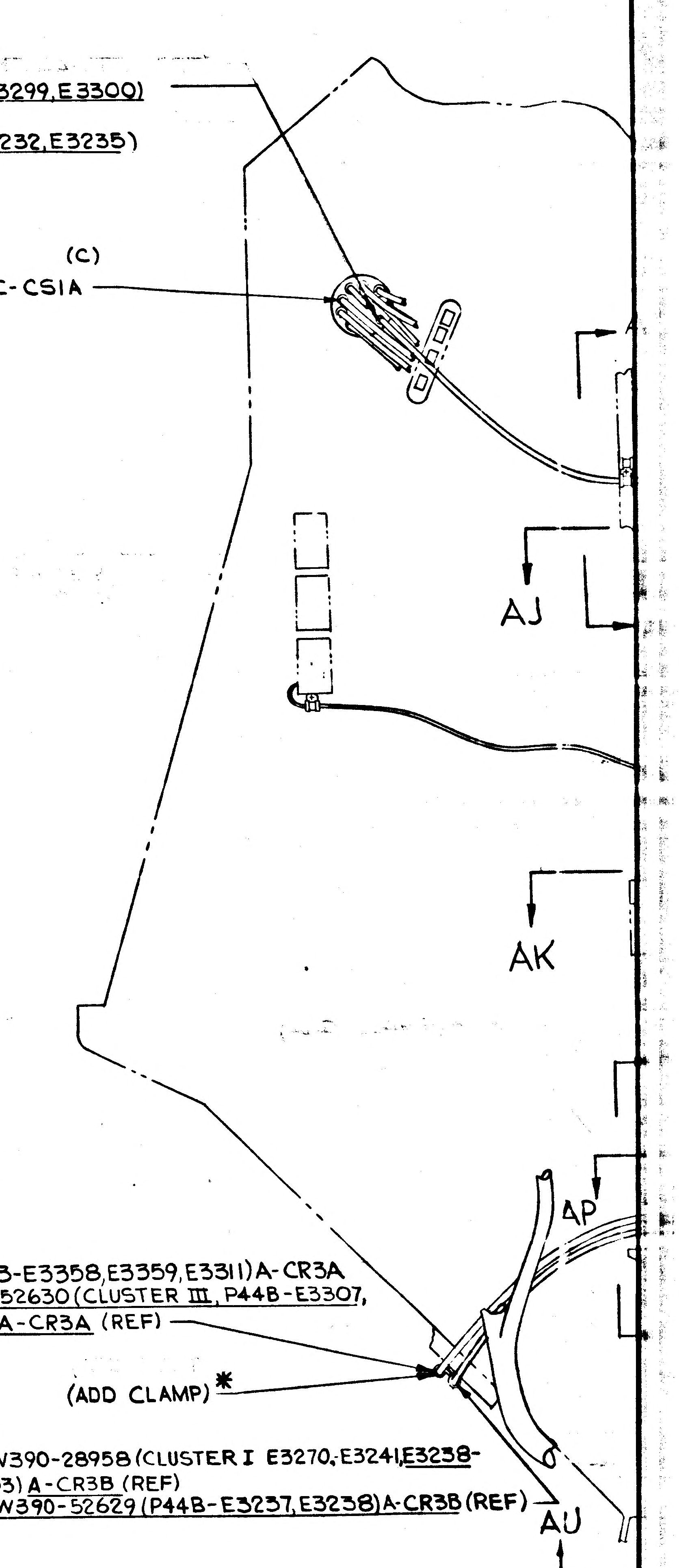
(A)
LDW390-52629 (P45B-E3299, E3300)
A-CR3A (REF)
LDW390-28958 (J703-E3232, E3235)
A-CR3A (REF)
(C)
LDW390-28958(J703- P45B) C-CS1A
AJ
AK
AP
(A)
LDW390-28958 (J703-E3358, E3359, E3311) A-CR3A
LDW390-52630 (CLUSTER III, P44B-E3307,
E3381) A-CR3A (REF)
(ADD CLAMP)*
(A)
LDW390-28958 (CLUSTER I E3270, E3241, E3238-
J703) A-CR3B (REF)
LDW390-52629 (P44B-E3237, E3238) A-CR3B (REF)
AU

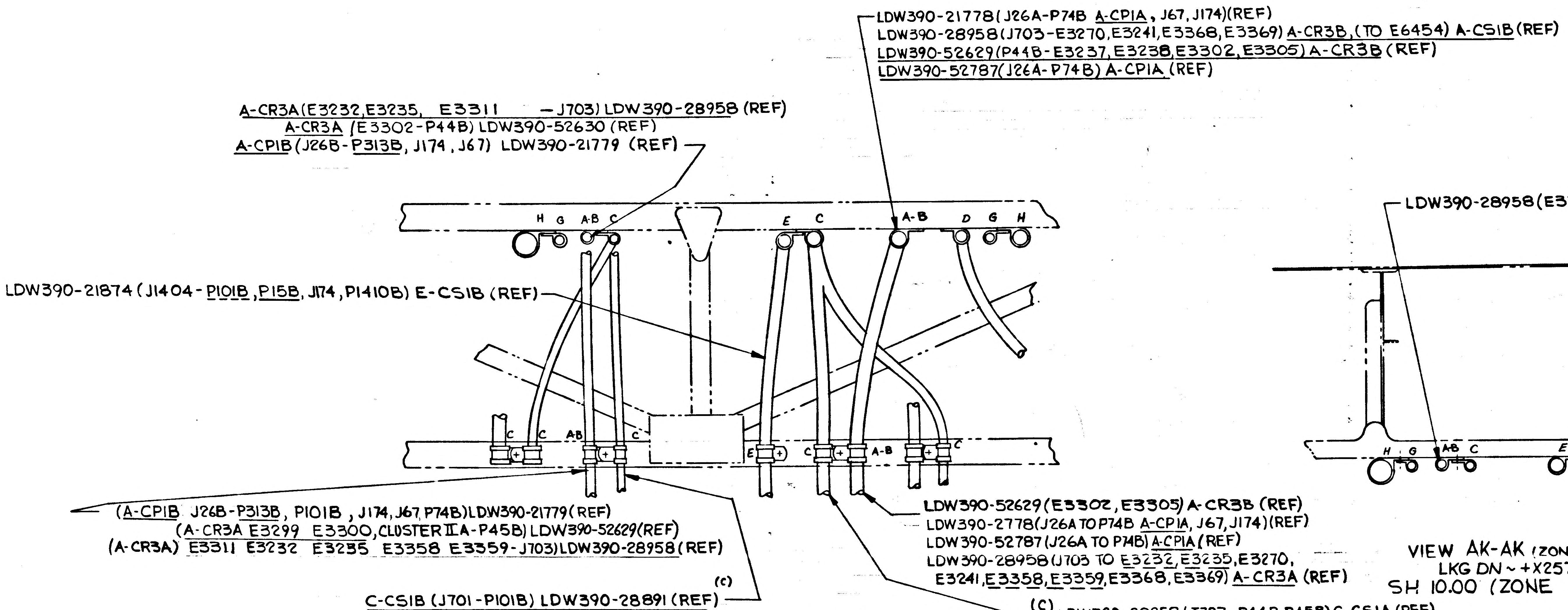
LDW390-21778(J26A-P74B A-CP1A, J67, J174)(REF)
LDW390-28958(J703-E3270, E3241, E3368, E3369) A-CR3B, (TO E6454) A-CS1B(REF)
LDW390-52629(P44B-E3237, E3238, E3302, E3305) A-CR3B (REF)
LDW390-52787(J26A-P74B) A-CP1A (REF)
A-CR3A(E3232, E3235, E3311 - J703) LDW390-28958 (REF)
A-CR3A (E3302-P44B) LDW390-52630 (REF)
A-CP1B (J26B-P313B, J174, J67) LDW390-21779 (REF)
H
G
A-B
C
E
C
A-B
D
G
H
LDW390-21874 (J1404-P101B, P15B, J174, P1410B) E-CS1B (REF)
C
C
AB
C
E
C
A-B
C
(A-CP1B J26B-P313B, P101B, J174, J67, P74B) LDW390-21779 (REF)
(A-CR3A E3299 E3300, CLUSTER II A-P45B) LDW390-52629(REF)
(A-CR3A) E3311 E3232 E3235 E3358 E3359-J703) LDW390-28958 (REF)
(c)
C-CS1B (J701-P101B) LDW390-28891 (REF)
LDW390-52629 (E3302, E3305) A-CR3B (REF)
LDW390-2778(J26A TO P74B A-CP1A, J67, J174)(REF)
LDW390-52787 (J26A TO P74B) A-CP1A (REF)
LDW390-28958 (J703 TO E3232, E3235, E3270,
E3241, E3358, E3359, E3368, E3369) A-CR3A (REF)
(C)
LDW390-28958 (J703-P44B, P45B) C-CS1A (REF)
LDW390-28891 (P101B - J701)

SECT AJ-AJ (ZONE 38 B)
LKG DN~+X274.29
SH 10.00 (ZONE 47A, 48A & 47B)

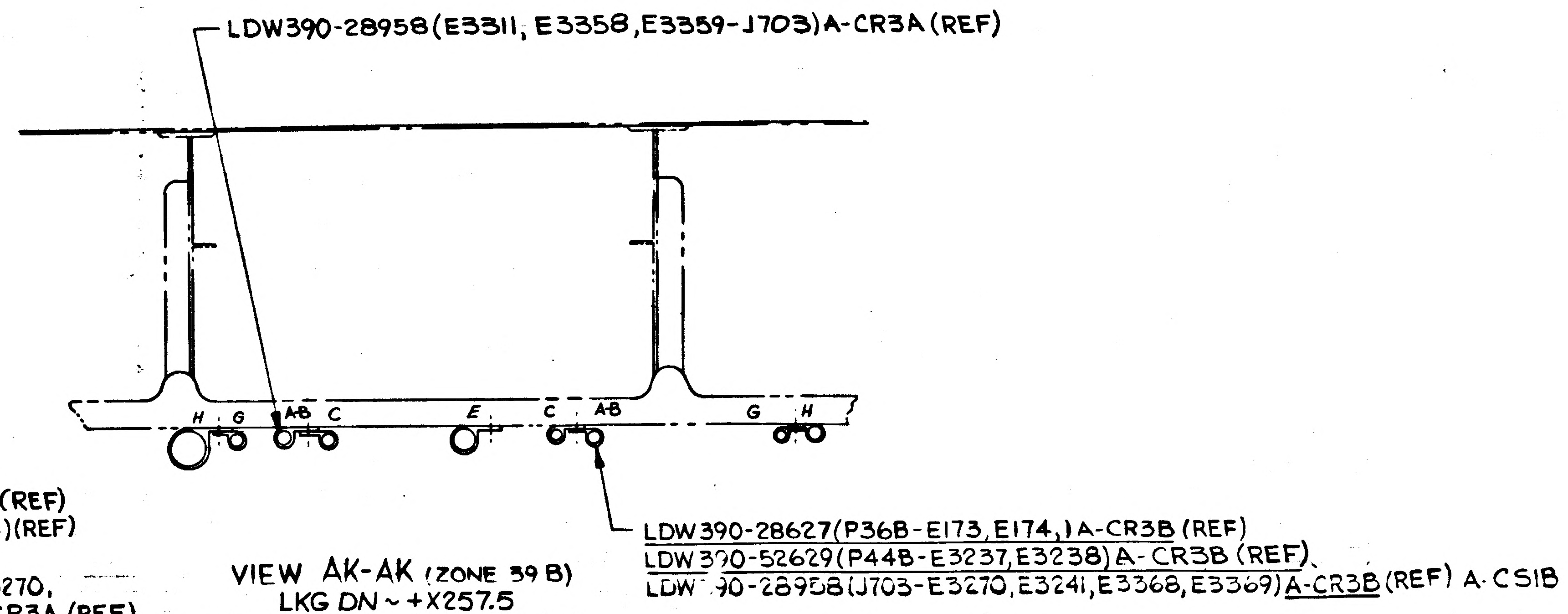
LDW390-28958 (E3311, E3358, E3359-J703) A-CR3A (REF)
H
G
AB
C
E
C
AB
G
H
LDW390-28627(P36B-E173, E174,) A-CR3B (REF)
LDW390-52629(P44B-E3237, E3238) A-CR3B (REF)
LDW 390-28958(J703-E3270, E3241, E3368, E3369) A-CR3B (REF) A-CS1B

VIEW AK-AK (ZONE 39 B)
LKG DN~+X257.5
SH 10.00 (ZONE 44A)

01/03

NAS 9-1100

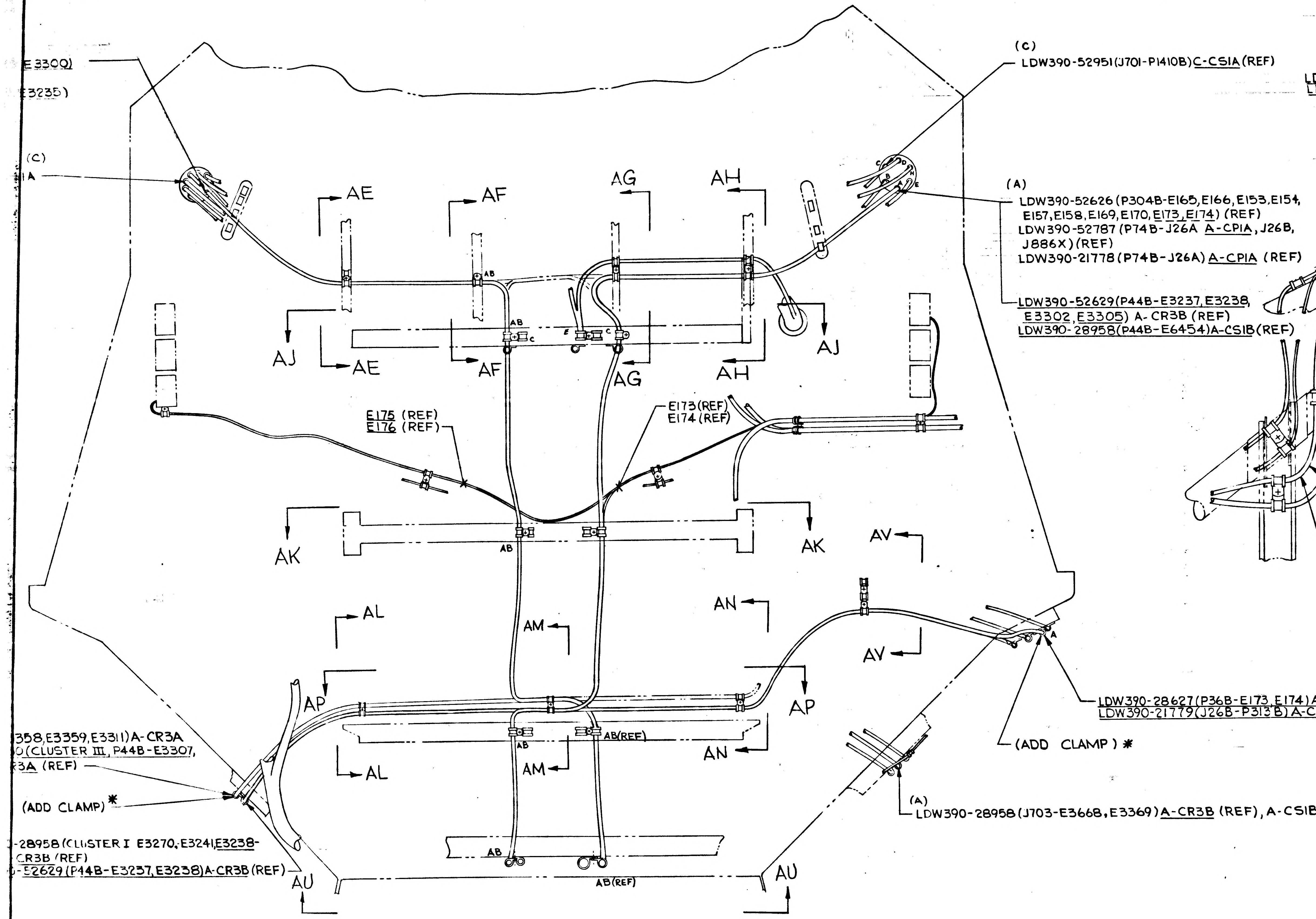
E3300)
E3235)
(C)
1A
AE
AF
AG
AH
AJ
AE
AF
AG
AH
AJ
(C)
LDW390-52951(J701-P1410B)C-CSIA(REF)
(A)
LDW390-52626(P304B-E165,E166,E153,E154,
E157,E158,E169,E170,E173,E174) (REF)
LDW390-52787 (P74B-J26A A-CPIA, J26B,
J886X)(REF)
LDW390-21778(P74B-J26A) A-CPIA (REF)
LDW390-52629(P44B-E3237,E3238,
E3302,E3305) A-CR3B (REF)
LDW390-28958(P44B-E6454)A-CSIB(REF)
E175 (REF)
E176 (REF)
E173(REF)
E174(REF)
AB
AK
AK
AV
AV
AL
AL
AN
AN
AM
AM
AP
AP
AB(REF)
AU
AU
LDW390-28627(P36B-E173,E174)A-CRIB (REF)
LDW390-21779(J26B-P313B)A-CPIB (REF)
(ADD CLAMP)*
(A)
LDW390-28958(J703-E3668,E3369)A-CR3B (REF), A-CSIB
358,E3359,E3311)A-CR3A
0(CLUSTER III, P44B-E3307,
3A (REF)
(ADD CLAMP)*
-28958(CLUSTER I E3270,E3241,E3238-
CR3B (REF)
-E2629(P44B-E3237,E3238)A-CR3B(REF)

VIEW LOOKING FWD -Z 27 BHD
SH 9.00 (ZONE 37B, 37A, 38B, 39A & 40C)

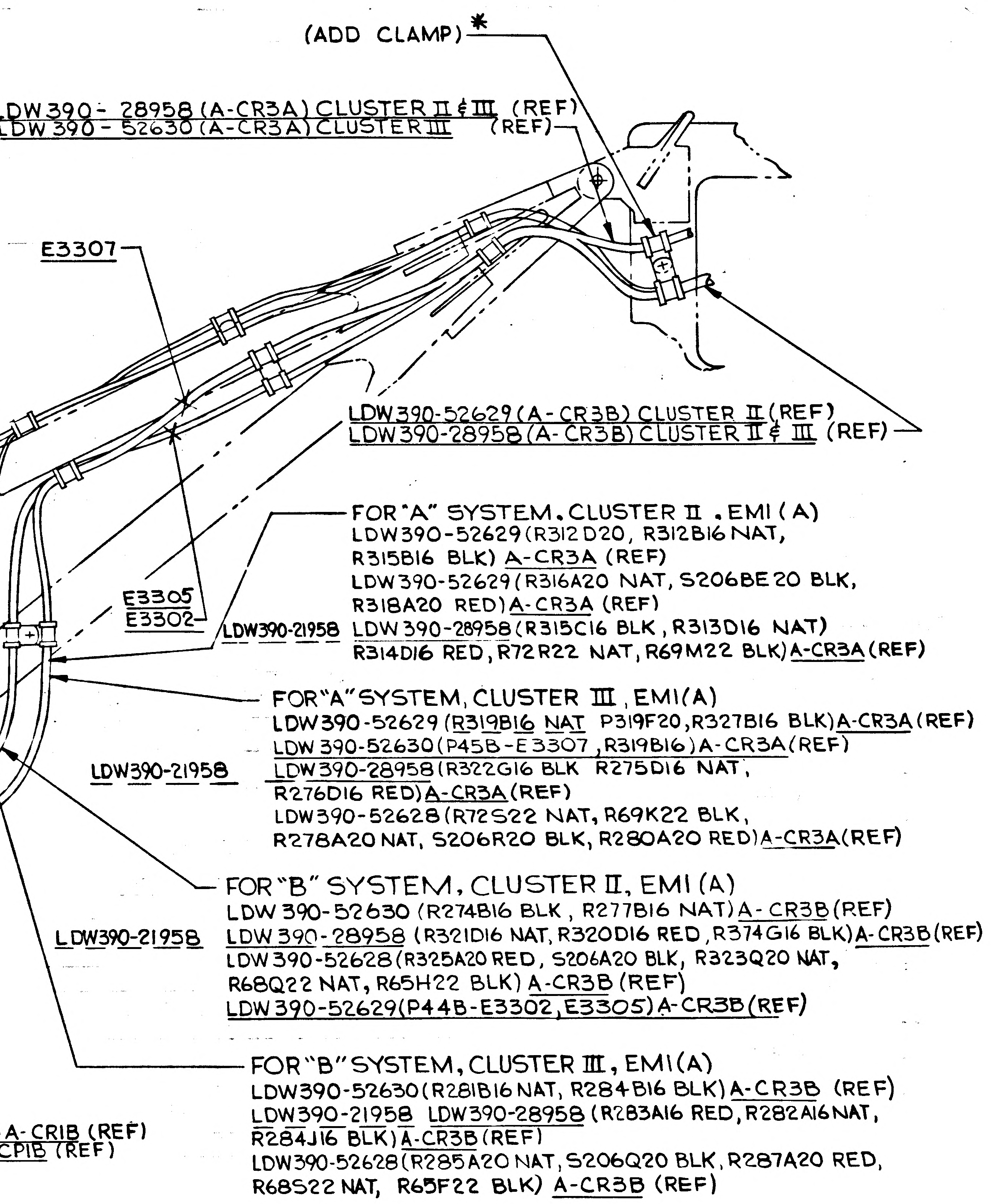
(ADD CLAMP)*
LDW390-28958 (A-CR3A) CLUSTER II & III (REF)
LDW390-52630 (A-CR3A) CLUSTER III (REF)
E3307
LDW390-52629 (A-CR3B) CLUSTER II (REF)
LDW390-28958 (A-CR3B) CLUSTER II & III (REF)
FOR "A" SYSTEM, CLUSTER II, EMI (A)
LDW390-52629 (R312D20, R312B16 NAT,
R315B16 BLK) A-CR3A (REF)
LDW390-52629 (R316A20 NAT, S206BE20 BLK,
R318A20 RED) A-CR3A (REF)
LDW390-28958 (R315C16 BLK, R313D16 NAT)
R314D16 RED, R72R22 NAT, R69M22 BLK) A-CR3A (REF)
E3305
E3302
LDW390-21958
FOR "A" SYSTEM, CLUSTER III, EMI (A)
LDW390-52629 (R319B16 NAT P319F20, R327B16 BLK) A-CR3A (REF)
LDW390-52630 (P45B-E3307, R319B16) A-CR3A (REF)
LDW390-28958 (R322G16 BLK R275D16 NAT,
R276D16 RED) A-CR3A (REF)
LDW390-52628 (R72S22 NAT, R69K22 BLK,
R278A20 NAT, S206R20 BLK, R280A20 RED) A-CR3A (REF)
LDW390-21958
FOR "B" SYSTEM, CLUSTER II, EMI (A)
LDW390-52630 (R274B16 BLK, R277B16 NAT) A-CR3B (REF)
LDW390-28958 (R321D16 NAT, R320D16 RED, R374G16 BLK) A-CR3B (REF)
LDW390-52628 (R325A20 RED, S206A20 BLK, R323Q20 NAT,
R68Q22 NAT, R65H22 BLK) A-CR3B (REF)
LDW390-52629 (P44B-E3302, E3305) A-CR3B (REF)
LDW390-21958
FOR "B" SYSTEM, CLUSTER III, EMI (A)
LDW390-52630 (R281B16 NAT, R284B16 BLK) A-CR3B (REF)
LDW390-21958 LDW390-28958 (R283A16 RED, R282A16 NAT,
R284J16 BLK) A-CR3B (REF)
LDW390-52628 (R285A20 NAT, S206Q20 BLK, R287A20 RED,
R68S22 NAT, R65F22 BLK) A-CR3B (REF)

LOOKING AFT R.H. SIDE
CLUSTER III
1/2 SIZE
SH 7.00 (ZONE 24B & 25B)

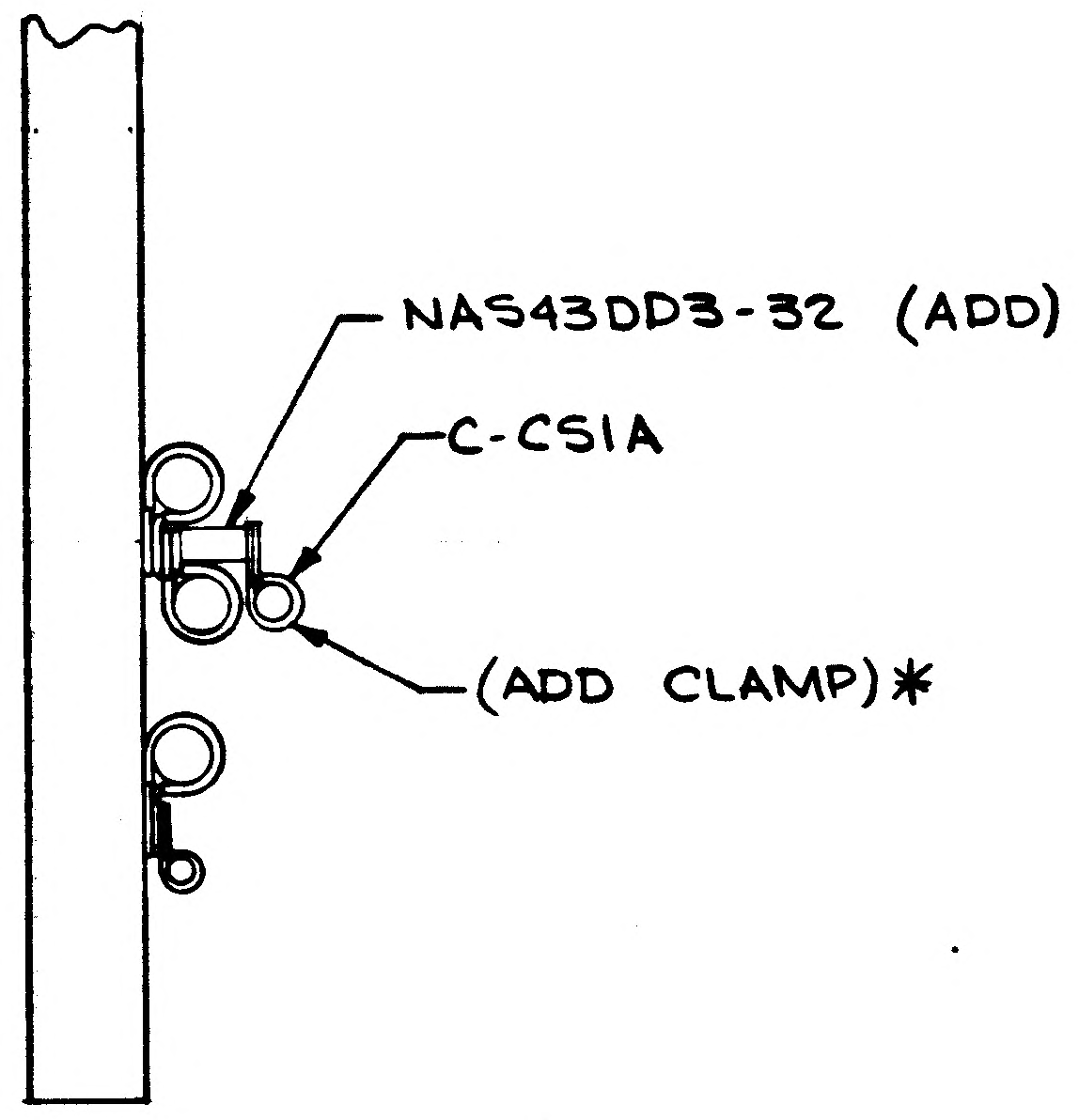
NAS43DD3-32 (ADD)
C-CSIA
(ADD CLAMP)*

SECT. AF-AF (ZONE 39B)
LKG INBD LH SIDE ~ -Y5.75
SH 10.00 (ZONES 46B & 47B)

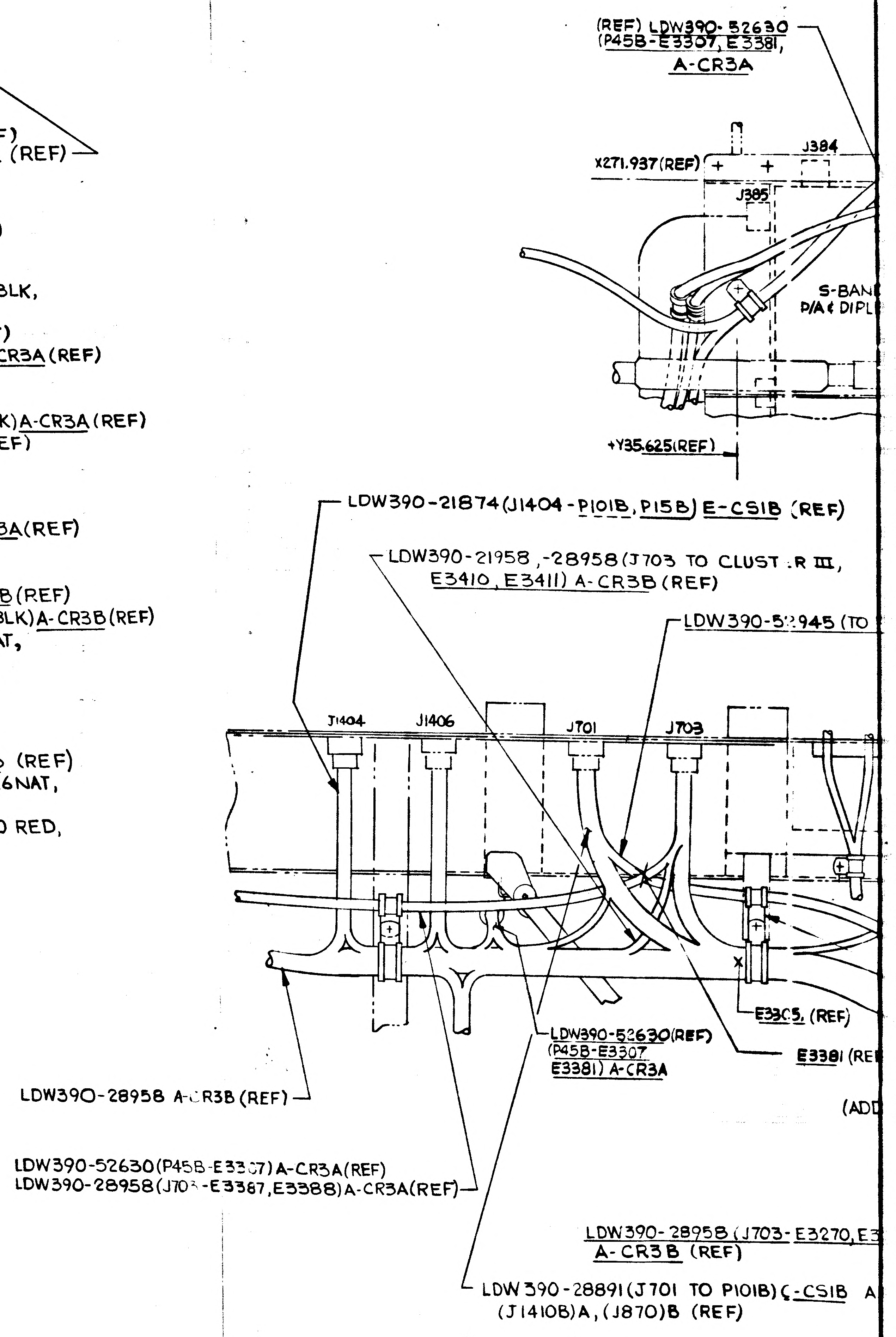
(REF) LDW390-52630
(P45B-E3307, E3381,
A-CR3A
X271.937(REF)
J384
J385
S-BAN
P/A & DIPL
+Y35.625(REF)
LDW390-21874 (J1404-P101B, P15B) E-CSIB (REF)
LDW390-21958, -28958 (J703 TO CLUST. R III,
E3410, E3411) A-CR3B (REF)
LDW390-52945 (TO
J1404
J1406
J701
J703
LDW390-52630(REF)
(P45B-E3307
E3381) A-CR3A
E3305 (REF)
E3381 (RE
(AD
LDW390-28958 A-CR3B (REF)
LDW390-52630 (P45B-E3307) A-CR3A (REF)
LDW390-28958 (J703-E3387, E3388) A-CR3A (REF)
LDW390-28958 (J703-E3270, E3
A-CR3B (REF)
LDW390-28891 (J701 TO P101B) C-CSIB A
(J1410B) A, (J870) B (REF)

3 (REF) A-CSIB

02/03

NAS 9-1100

(REF) LDW390-52630
(P45B-E3307, E3381,
A-CR3A

LDW390-52630(REF)
(P45B-E3307, E3311, E3381)
(A)CR3A

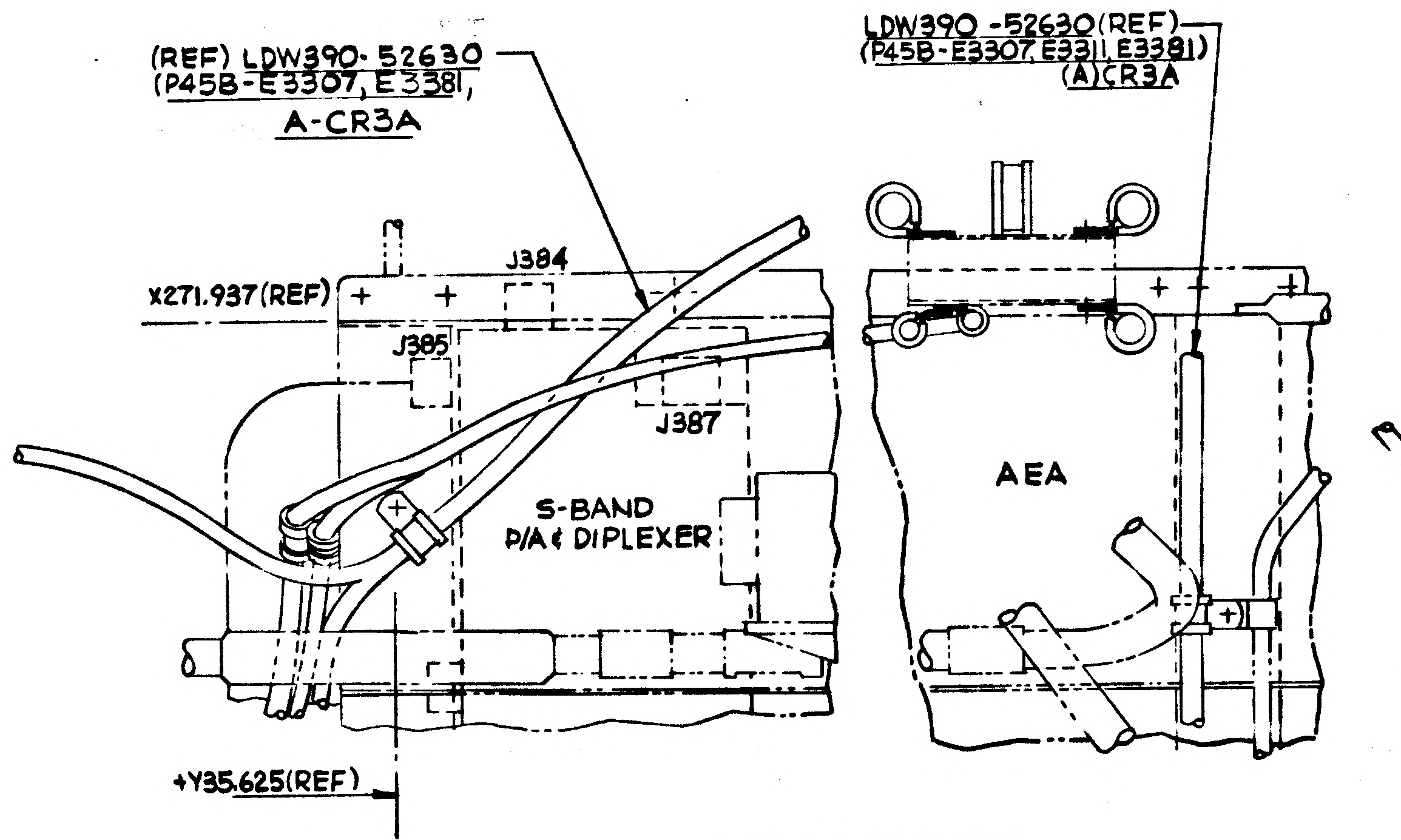

AFT EQUIP RACK
VIEW LKG AFT
SH 4.00 (ZONE 6C)

LDW390-52629 (REF)
(P44B-E3302, E3305) A-CR3B (REF)
LDW390-28958 (J703-E3238) A-CR3B (REF)

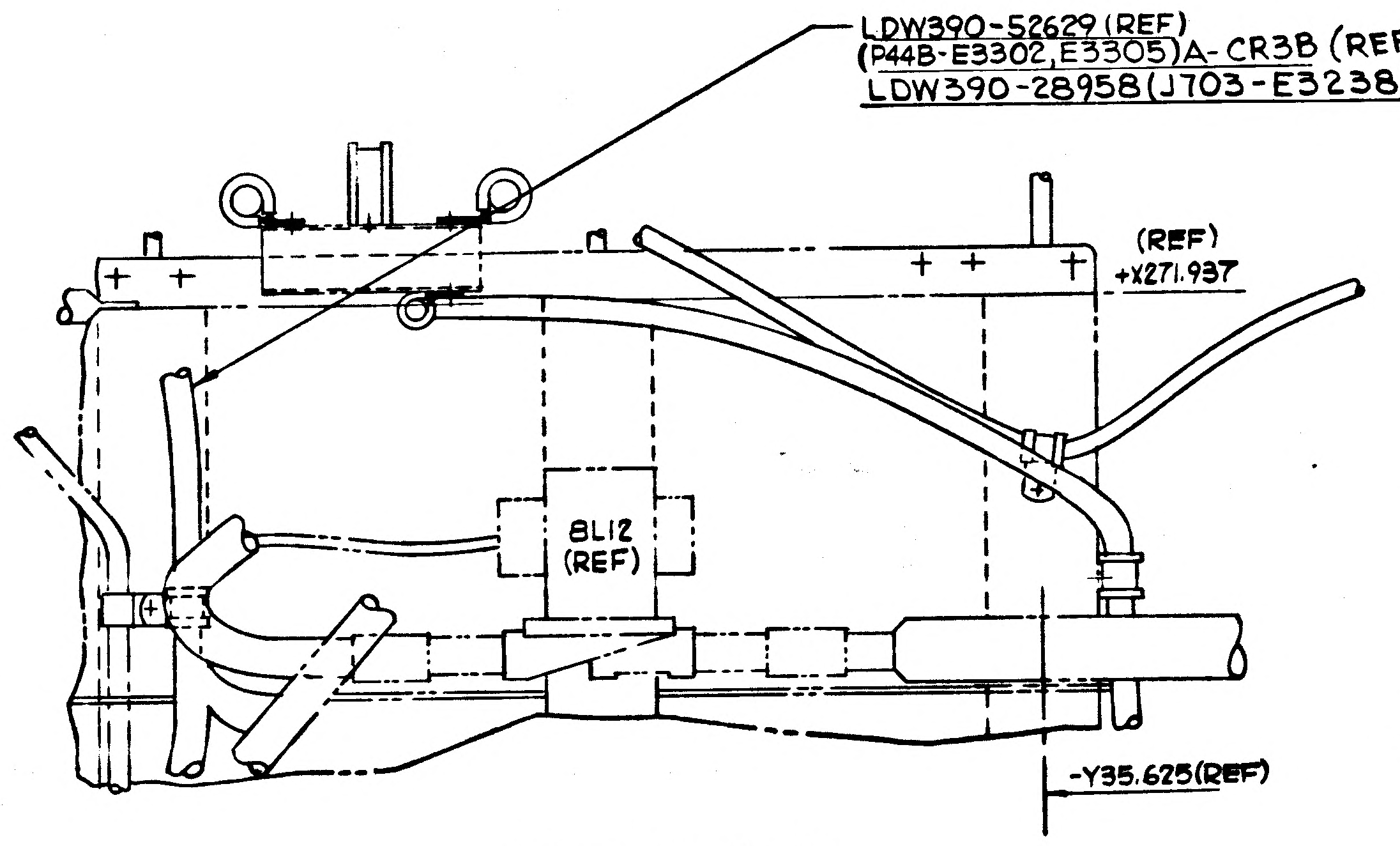

AFT EQUIP RACK
VIEW LKG AFT
SH 4.00 (ZONE 3C)

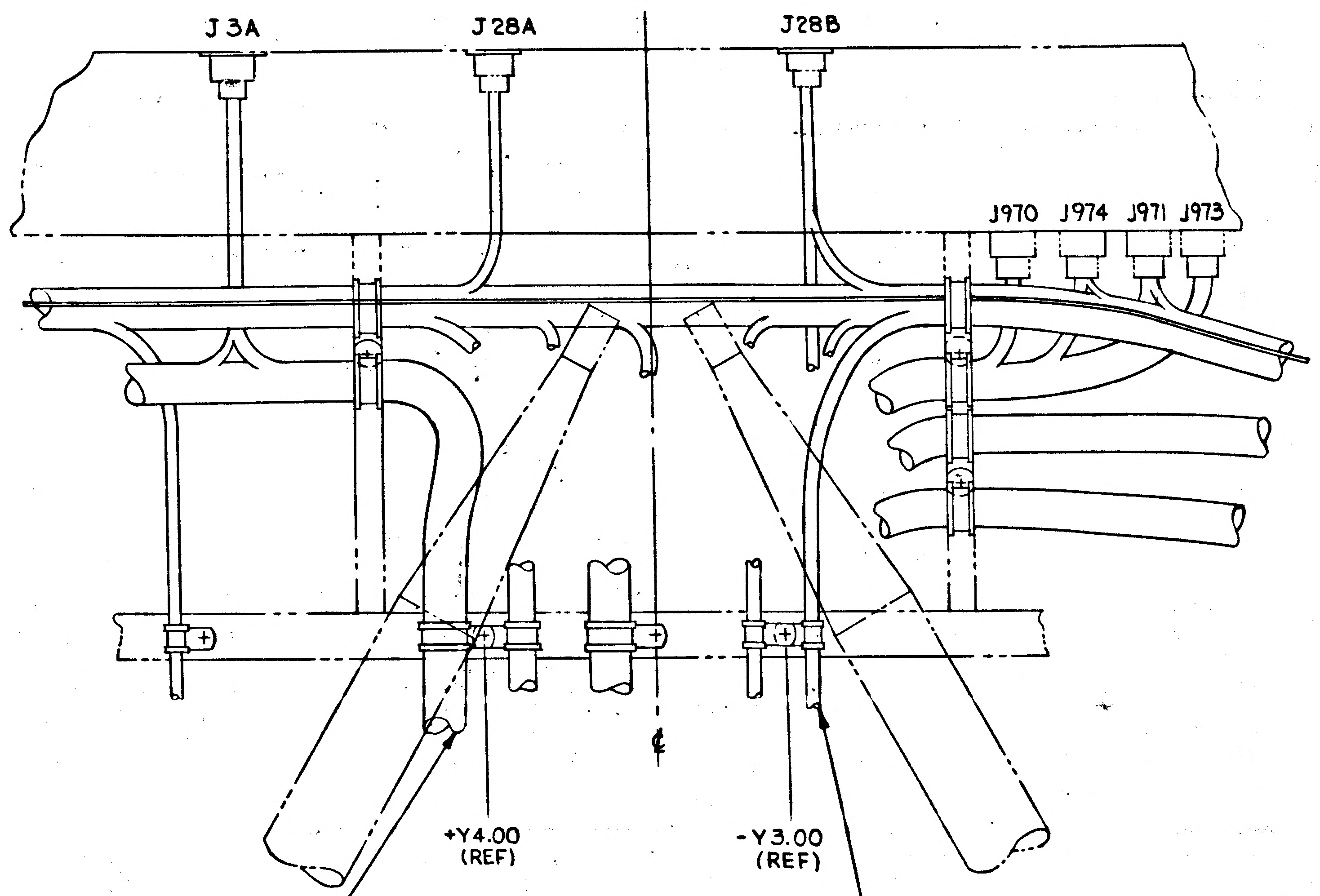

LDW 390-52630 (REF)
(P45B-E3307, E3381) A-CR3A

VIEW E-E
AFT EQUIP BAY ECS
LOOKING DOWN X 238.50
SH 5.00 (ZONES 11A & 12A)

ADD CALLOUT
LDW 390-52629 (REF)
(P44B-E3302, E3305) A-CR3B (REF)
LDW390-28958 (FROM J703-E3238)
A-CR3B (REF)

PRINTING INFO ONLY DWG SIZE 34X132
FULL SIZE SHEET AREA (34 X 132) = 31.2 SQ.FT
1/2 SHEET AREA (1/4 OF FULL) = 7.8 SQ.FT

LDW390-21874 (J1404-P101B, P15B) E-CS1B (REF)

LDW390-21958, -28958 (J703 TO CLUSTER III,
E3410, E3411) A-CR3B (REF)

LDW390-52945 (TO P1410B) C-CS1A (REF)

LDW390-28958
C-CS1A (REF)

LDW390-52629 (A-CR3A)(REF)
LDW390-28958 (A-CR3A)(REF)

A-CR3B

LDW390-52629 (E3302, E3305) A-CR3B (REF)
LDW390-28958 (TO E3418, E3427) A-CR3A (REF)

LDW390-28958 (TO E3425, E3426) A-CR3B (REF)

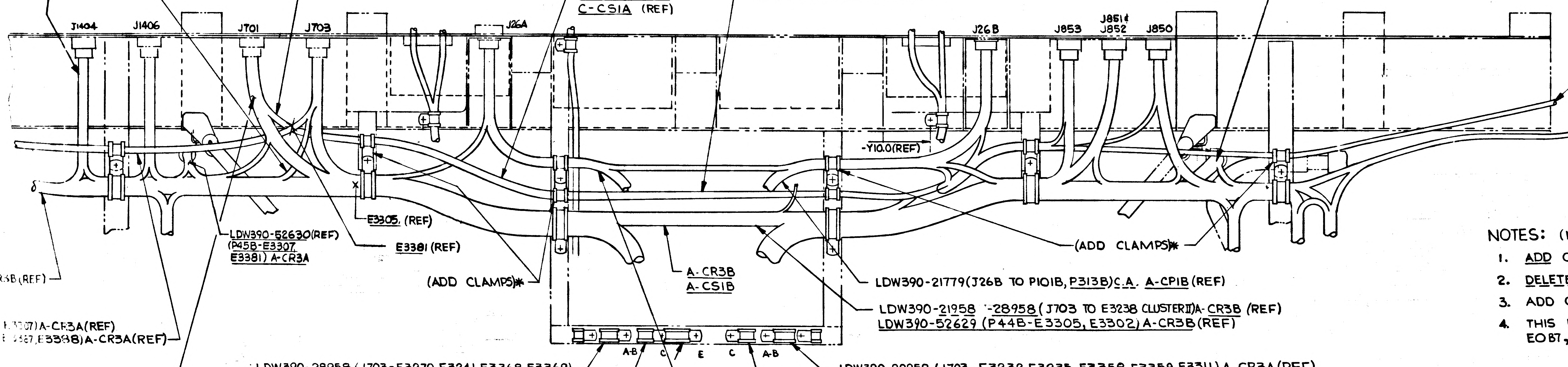

A-CR3B (REF)

P45B [illegible]07) A-CR3A (REF)
J703-[illegible]87, E3388) A-CR3A (REF)

LDW390-52630 (REF)
(P45B-E3307
E3381) A-CR3A

E3305. (REF)

E3381 (REF)

(ADD CLAMPS)*

(ADD CLAMPS)*

A-CR3B
A-CS1B

LDW390-21779 (J26B TO P101B, P313B) C.A. A-CP1B (REF)

LDW390-21958 -28958 (J703 TO E3238 CLUSTER II) A-CR3B (REF)
LDW390-52629 (P44B-E3305, E3302) A-CR3B (REF)

LDW390-28958 (J703-E3270, E3241, E3368, E3369)
A-CR3B (REF)

LDW390-28958 (J703-E3232, E3235, E3358, E3359, E3311) A-CR3A (REF)

C-CS1A

C-CS1B

LDW390-21778 (J26A TO P74B) A-CP1A (J67, P74B, J174) A (REF)
LDW390-52787 (J26A TO P74B) A-CP1A (REF)

E-CS1B

LDW 390-28891 (J701 TO P101B) C-CS1B A, C, E
(J1410B) A, (J870) B (REF)

VIEW H-H (SEE SHT. 4.00)
AFT EQUIP BAY ECS
LOOKING DOWN AT X280.
SH 6.00 (ZONE 18B, THRU 21B)

NOTES: (NOT TO BE ADDED TO DRAWING)

1. ADD CALLOUTS OR PORTIONS OF CALLOUTS WHICH ARE, UNDER LINED, SOLID.
2. DELETE CALLOUTS OR PORTIONS OF CALLOUTS WHICH ARE, UNDER LINED, DASHED.
3. ADD GC500AA CLAMP PER LPC-280-23 WHERE SO INDICATED *
4. THIS EO B6, (CONTROL NO. LDW280A-7421) MUST BE INCORPORATED IN CONJUNCTION WITH EO B7, (CONTROL NO. LDW280A-7563)

DETAIL SPEC REQD		CLASS II ENGRG CHG	✓	CLASS I ENGRG CHG	
LCD-1306	CONTROL INFO NO. LDW280A-7421				
REASON FOR EO: TO ADD REDUNDANT WIRING	DESCRIPTION OF EO: REVISED WIRE ROUTING TO MAINTAIN EMI SEPERATION IN SECTIONS H-H, AH-AH, AK-AK, AG-AG, AJ-AJ, AE-AE, AF-AF, VIEW LKG AFT AT AFT EQUIP BAY, AND LKG AFT AT CLUSTER III.	GRUMMAN EO RELEASE: JL 7-8-67			

MODEL	EFFECTIVITY: PROCURING ACT. NO.	GAEC UNIT NO.	SUB CONTR UNIT NO.
LM		LM-2 (32)	

DRAWING REVISION REQD: REVISE DWG	RECORD EO	DISPOSITION OF PARTS: REWORK	SCRAP	BY / DATE	SUPPORT	RELIAB GROUP	GROUP LEADER	STRESS GROUP	LIAISON ENGRG	PROJ ENGR	
✓		✓		JaP 6/23/67 VD1			JW 6/23/67	JV 6/27/67		6/27	Batt. 7-8-67

PRIORITY	DRAWING TITLE	ENGINEERING ORDER DRAWING NO.	EO NO.
C	LINES INSTALLATION ELECTRONIC ASCENT STAGE ~ AFT EQUIP. BAY	LDW280-52360	B6

ISSUED BY DAN CAROLEO SECTION EQUIP. LINES/VD1 GROUP NO. 332 PL 25 EX: 1154 CODE IDENT NO. 26512 B GRUMMAN AIRCRAFT ENGINEERING CORP BETHPAGE, L. I., N. Y.

ENG 32 3 REV 3-65

03/03 NAS 9-1100

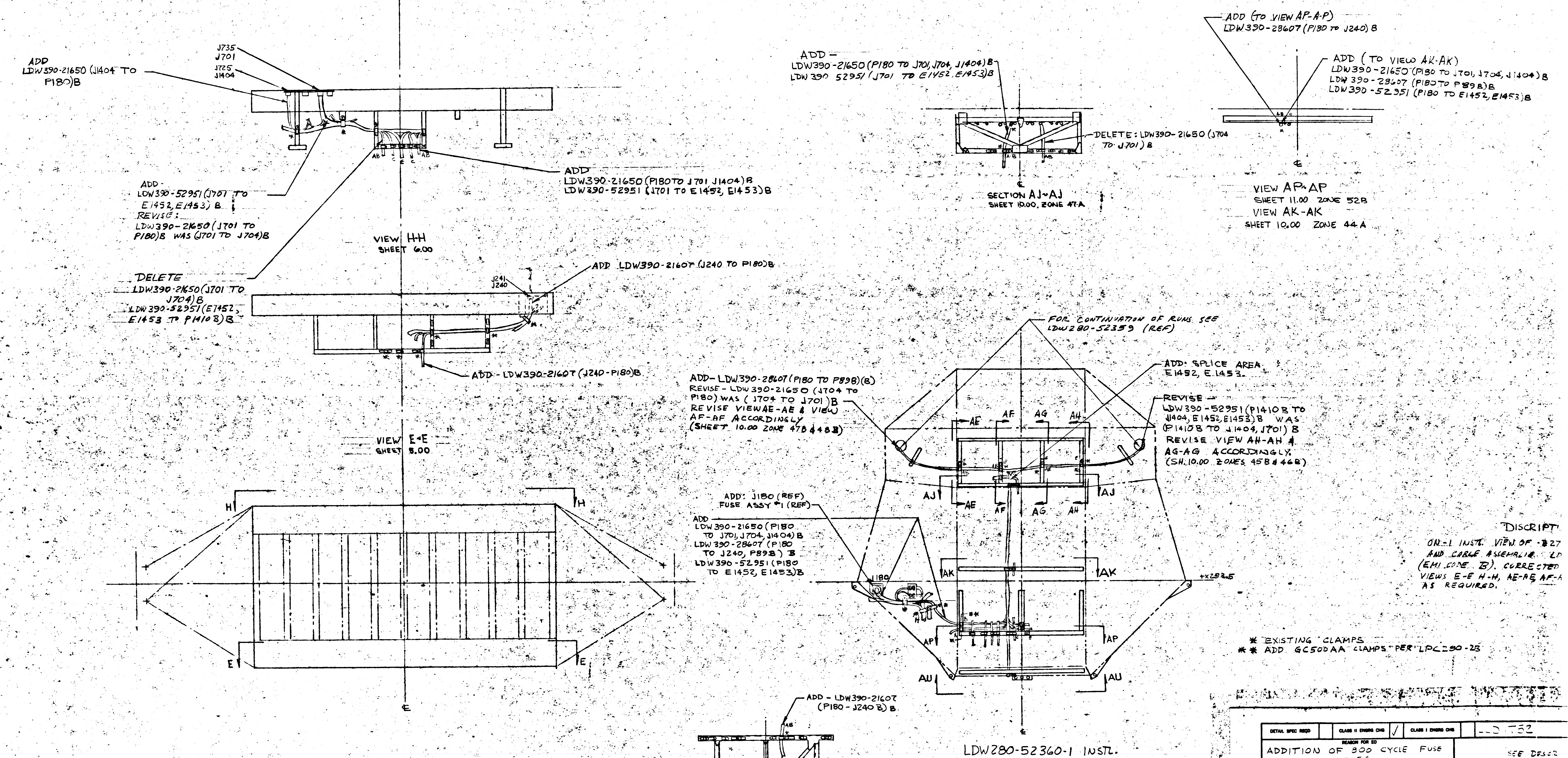
ADD
LDW390-21650 (J1404 TO P180)B
J735
J701
J725
J1404
ADD
LDW390-21650 (P180 TO J701 J1404)B
LDW390-52951 (J701 TO E1452, E1453)B
ADD-
LDW390-52951 (J701 TO E1452, E1453) B
REVISE:
LDW390-21650 (J701 TO P180)B WAS (J701 TO J704)B
AB
C
E
C
AB
DELETE
LDW390-21650 (J701 TO J704)B
LDW390-52951 (E1452, E1453 TO P1410B)B
J241
J240
ADD LDW390-21607 (J240 TO P180)B
ADD - LDW390-21607 (J240-P180)B
ADD -
LDW390-21650 (P180 TO J701, J704, J1404)B
LDW 390 52951 (J701 TO E1452, E1453)B
DELETE: LDW390-21650 (J704 TO J701) B
A-B
AB
ADD (TO VIEW AP-A-P)
LDW390-28607 (P180 TO J240) B
ADD (TO VIEW AK-AK)
LDW390-21650 (P180 TO J701, J704, J1404) B
LDW 390-28607 (P180 TO P898)B
LDW390-52951 (P180 TO E1452, E1453)B
H
H
E
E
FOR CONTINUATION OF RUNS SEE LDW280-52359 (REF)
ADD-LDW390-28607 (P180 TO P898)(B)
REVISE - LDW390-21650 (J704 TO P180) WAS (J704 TO J701) B
REVISE VIEW AE-AE & VIEW AF-AF ACCORDINGLY (SHEET 10.00 ZONE 47B & 48B)
ADD: SPLICE AREA E1452, E1453.
REVISE -
LDW390-52951 (P1410B TO J1404, E1452, E1453) B WAS (P1410B TO J1404, J701) B
REVISE VIEW AH-AH & AG-AG ACCORDINGLY. (SH. 10.00 ZONES 45B & 46B)
AE
AF
AG
AH
AJ
AJ
AE
AF
AG
AH
ADD: J180 (REF)
FUSE ASSY #1 (REF)
ADD
LDW390-21650 (P180 TO J701, J704, J1404) B
LDW390-28607 (P180 TO J240, P898) B
LDW390-52951 (P180 TO E1452, E1453)B
J180
AK
AK
+X282.5
AP
AP
AU
AU
ADD - LDW390-21607 (P180 - J240 B) B.
AB
℄
℄
℄
℄
℄

VIEW H-H
SHEET 6.00

VIEW E-E
SHEET 5.00

AFT EQUIP. RACK
VIEW LOOKING AFT
SHEET 4.00

SECTION AJ-AJ
SHEET 10.00, ZONE 47A

VIEW AP-AP
SHEET 11.00 ZONE 52B

VIEW AK-AK
SHEET 10.00 ZONE 44A

LDW280-52360-1 INSTL.
-227 BULKHEAD
VIEW LOOKING FWD.
SHEET 9.00

VIEW AU-AU
SHEET 11.00 ZONE 51A.

DISCRIPT

ON-1 INSTL. VIEW OF -227 AND CABLE ASSEMBLIE LD (EMI CODE B). CORRECTED VIEWS E-E H-H, AE-AE AF-A AS REQUIRED.

* EXISTING CLAMPS
** ADD GC500AA CLAMPS PER LPC290-23

DETAIL SPEC REQD		CLASS II ENGRG CHG	✓	CLASS I ENGRG CHG		LD T52

REASON FOR EO	
ADDITION OF 800 CYCLE FUSE ASSEMBLY CABLES	SEE DESCR

MODEL	EFFECTIVITY PROCURING ACT. NO.	EFFECTIVITY GAEC UNIT NO.	EFFECTIVITY SUB CONTR UNIT NO.	DRAWING REVISION REQD REVISE DWG	DRAWING REVISION REQD RECORD EO	DISPOSITION OF PARTS REWORK	DISPOSITION OF PARTS SCRAP
LM		LM-2 632		✓		✓	

PRIORITY	DRAWING
C	LINES INSTALL ELECTRONIC ~ A/

ISSUED BY	SECTION	GROUP NO.	EL	CODE ID
8/7 X1392 C. R. Cohen	EQUIP LINES	332	25	26

ENG 32.3 REV 3-65

01/02 NAS 9-1100

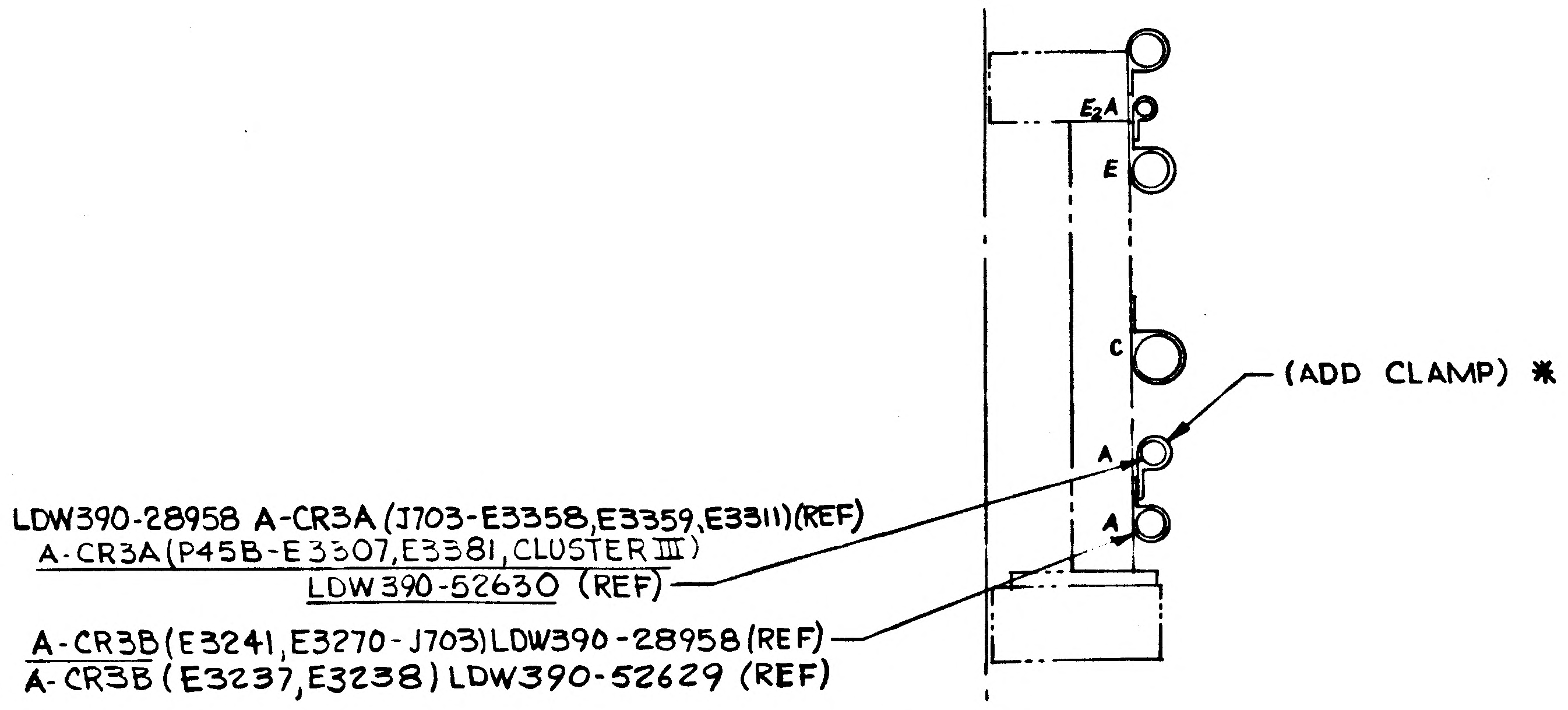
E2A
E
C
A
A
(ADD CLAMP) *
LDW390-28958 A-CR3A (J703-E3358,E3359,E3311)(REF)
A-CR3A(P45B-E3307,E3381, CLUSTER III)
LDW390-52630 (REF)
A-CR3B(E3241,E3270-J703)LDW390-28958(REF)
A-CR3B (E3237,E3238) LDW390-52629 (REF)

VIEW AL-AL
LKG INBD~-Y17.25
(ZONE 39A)
SH 11.00 (ZONE 55 B)

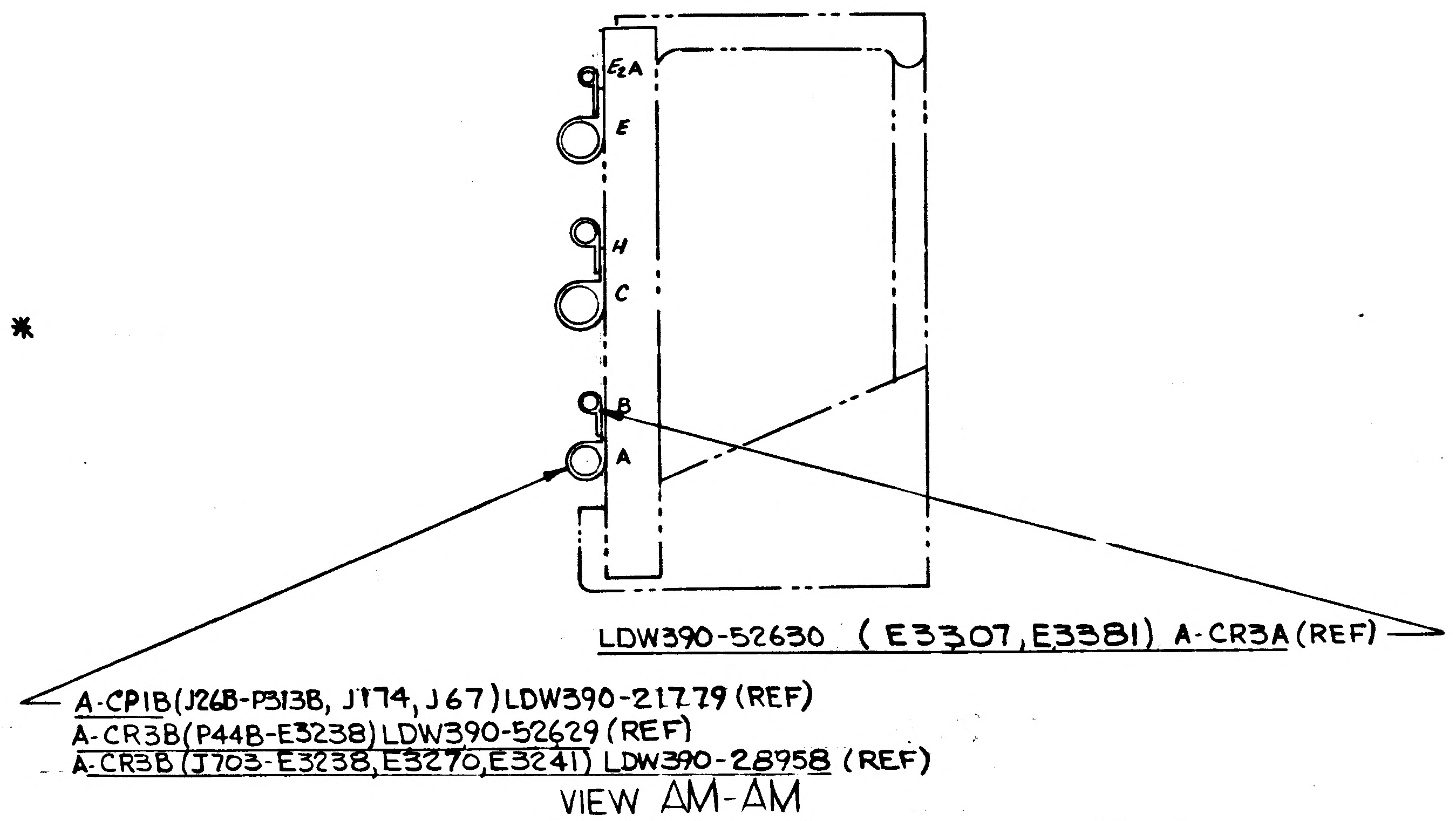
E2A
E
H
C
B
A
LDW390-52630 (E3307, E3381) A-CR3A (REF)
A-CP1B(J26B-P313B, J174, J67) LDW390-21779 (REF)
A-CR3B(P44B-E3238) LDW390-52629 (REF)
A-CR3B (J703-E3238, E3270, E3241) LDW390-28958 (REF)

VIEW AM-AM
LKG OUTBD ~ Y0
(ZONE 38 A)
SH 11.00 (ZONE 54 B)

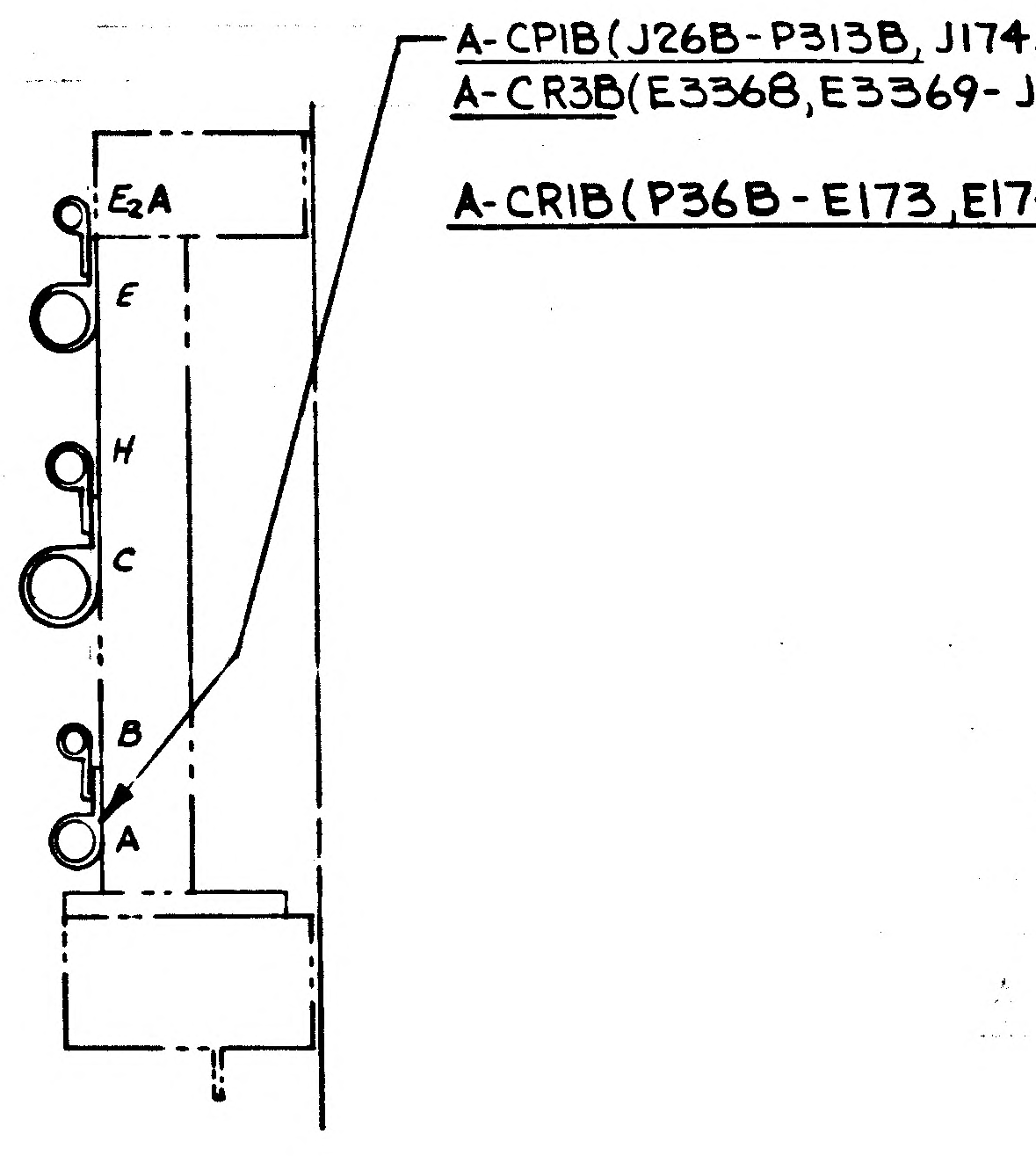
A-CP1B(J26B-P313B, J174. J67) LDW390-21779 (REF)
A-CR3B(E3368,E3369-J703) LDW390-28958(REF) A-CS1B
A-CR1B(P36B-E173,E174) LDW390-28627(REF)
E2A
E
H
C
B
A

VIEW AN-AN (ZONE 38A)
LKG INBD~ + Y17.25
SH 11.00 (ZONE 53C)

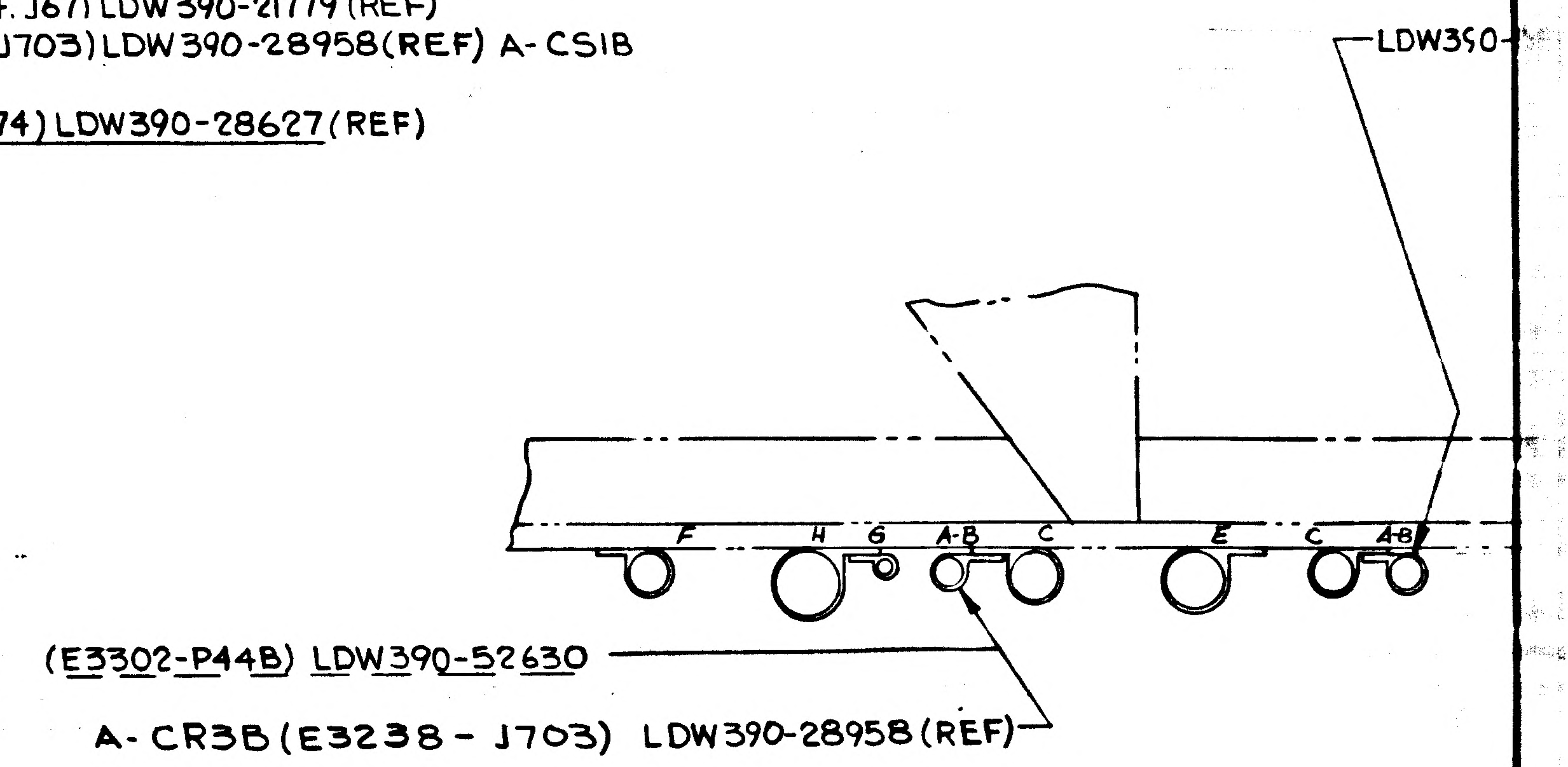
LDW390-
F
H
G
A-B
C
E
C
A-B
(E3302-P44B) LDW390-52630
A-CR3B(E3238 - J703) LDW390-28958(REF)

VIEW AP-AP (ZONE 38A)
LKG DN AT X241.0
SH 11.00 (ZONE 51C & 52 B)

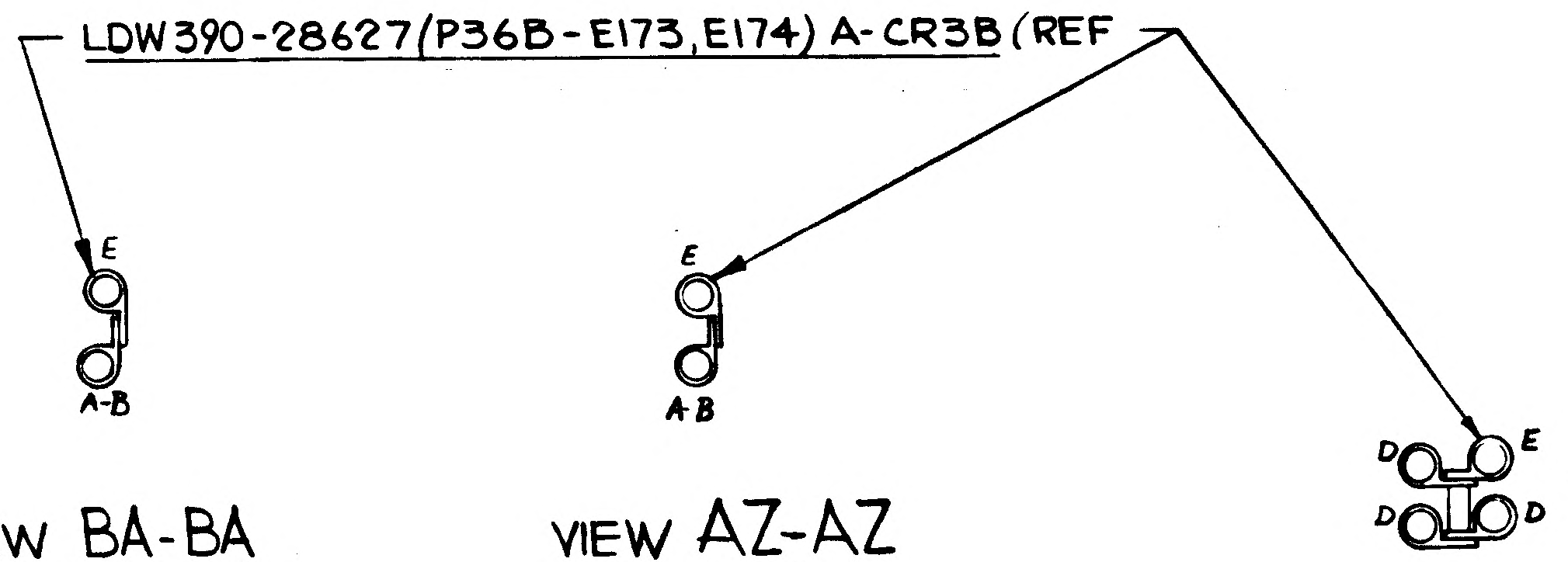
LDW390-28627(P36B-E173,E174) A-CR3B (REF
E
A-B
E
A-B
D
E
D
D

VIEW BA-BA
(ZONE 39B)
SH 11.00 (ZONE 55B)

VIEW AZ-AZ
(ZONE 38B)
SH 11.00 (ZONE 55B)

VIEW AX-AX
(ZONE 38B)
SH 11.00 (ZONE 54 B)

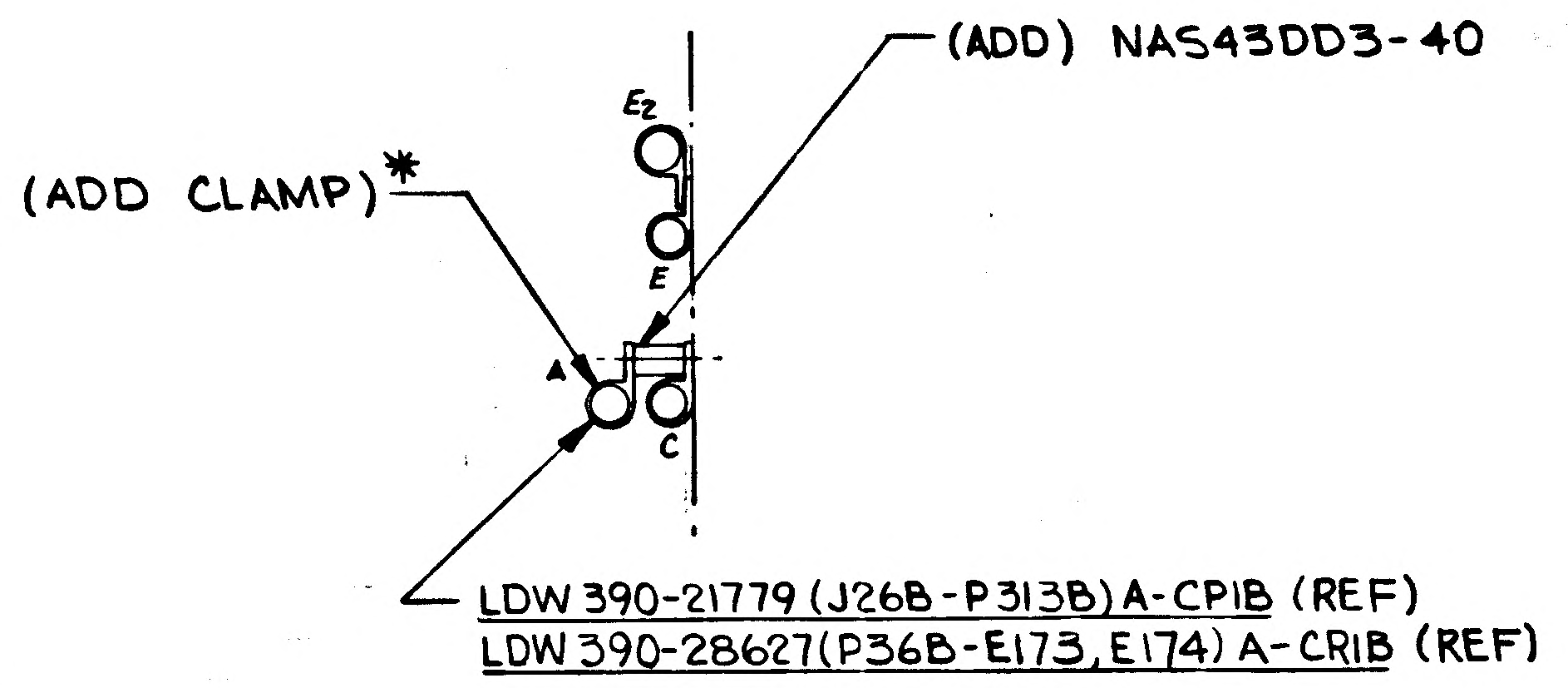
(ADD) NAS43DD3-40
(ADD CLAMP)*
E2
E
A
C
LDW390-21779 (J26B-P313B) A-CP1B (REF)
LDW390-28627 (P36B-E173,E174) A-CR1B (REF)

VIEW AV-AV (ZONES 38B)
SH 11.00 (ZONE 53B & 54B)

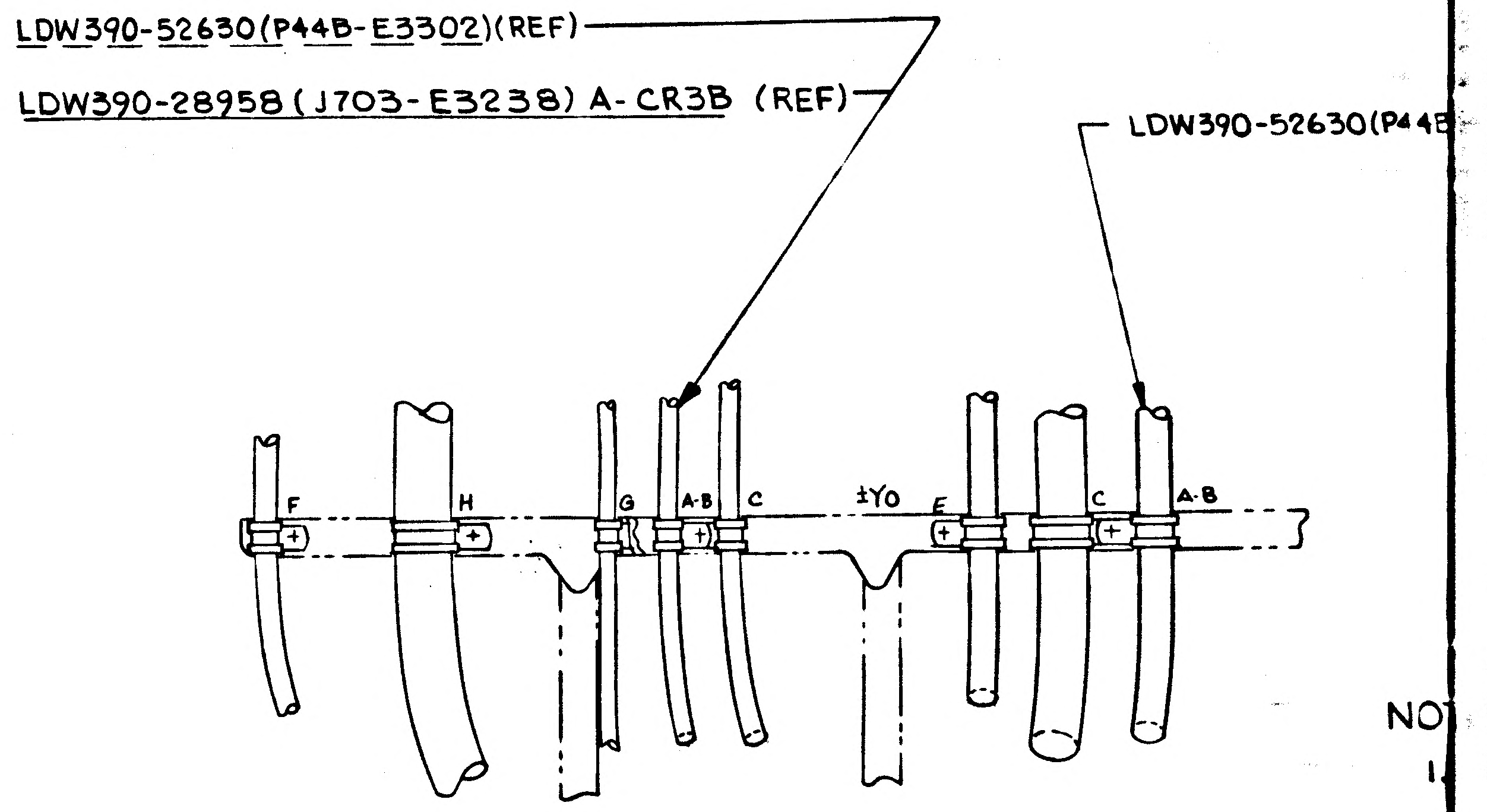
LDW390-52630(P44B-E3302)(REF)
LDW390-28958 (J703-E3238) A-CR3B (REF)
LDW390-52630(P44B
F
H
G
A-B
C
±Y0
E
C
A-B

VIEW AU-AU (ZONE 38A)
LKG UP ~ + X228.0
SH 11.00 (ZONE 51A & 52A)

NO
1.
2.
3.
4.

DETAIL SPEC REQD		CLASS II ENGRG CHG	√	CLASS I ENGRG CHG

REASON FOR EO

TO ADD REDUNDANT WIRING

MODEL	EFFECTIVITY		
	PROCURING ACT. NO.	GAEC UNIT NO.	SUB CONTR UNIT NO.
LM		LM-2 (32)	

ISSUED BY DAN CAROLEO SECTION EQUIP. LINES/VD1

ENG 33.3 REV 3-65

01/02 NAS 9-1100

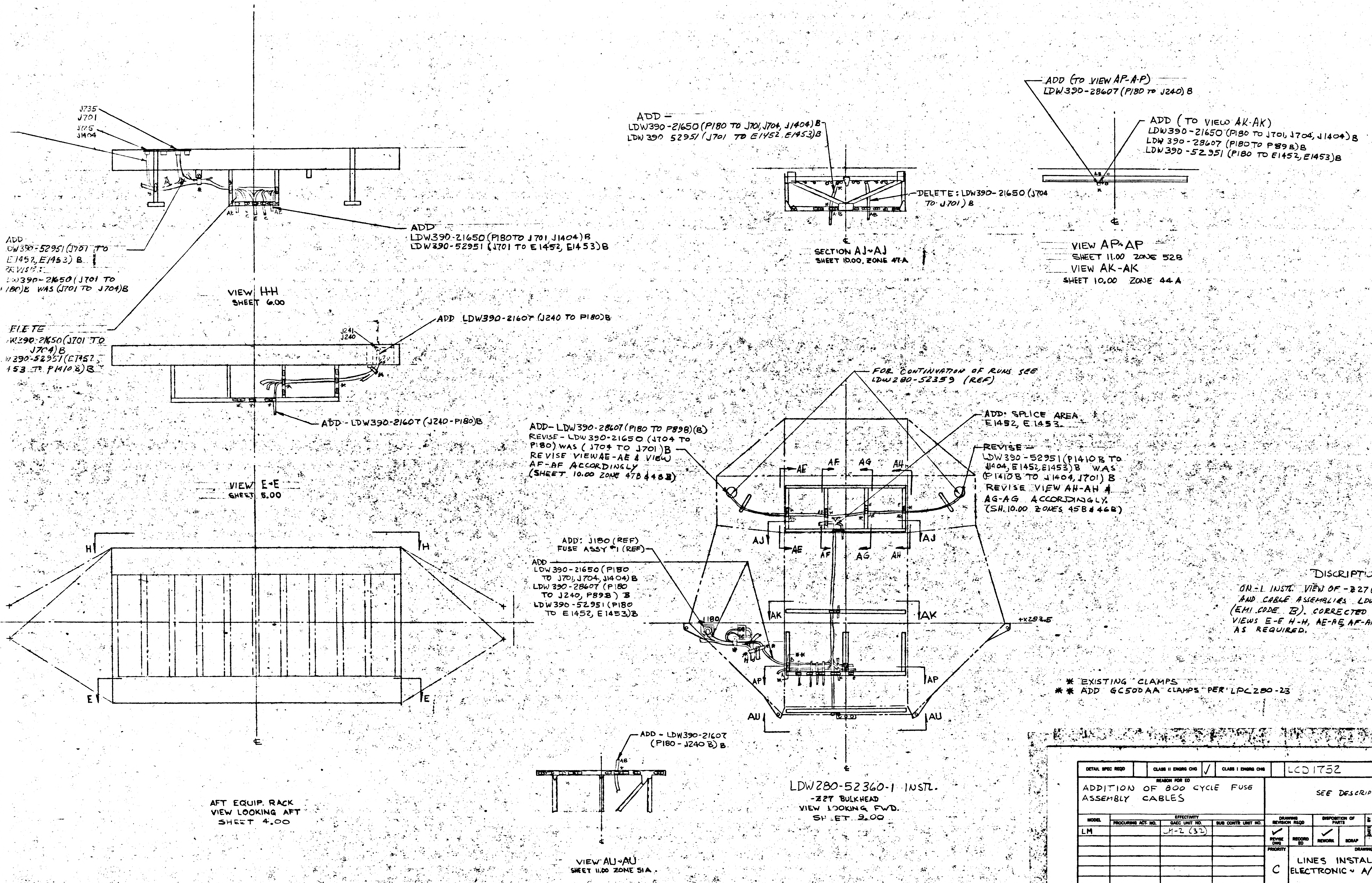
J735
J701
J725
J1404
ADD
LDW390-21650 (P180 TO J701, J1404) B
LDW390-52951 (J701 TO E1452, E1453) B
ADD
DW390-52951 (J701 TO
E1452, E1453) B
REVISE:
DW390-21650 (J701 TO
180) B WAS (J701 TO J704) B
VIEW H-H
SHEET 6.00
ELETE
W390-21650 (J701 TO
J704) B
W390-52951 (E1452,
453 TO P1410B) B
ADD LDW390-21607 (J240 TO P180) B
J241
J240
ADD - LDW390-21607 (J240-P180) B
VIEW E-E
SHEET 5.00
H
H
E
E
AFT EQUIP. RACK
VIEW LOOKING AFT
SHEET 4.00
ADD -
LDW390-21650 (P180 TO J701, J704, J1404) B
LDW390 52951 (J701 TO E1452, E1453) B
DELETE: LDW390-21650 (J704
TO J701) B
SECTION AJ-AJ
SHEET 10.00, ZONE 47-A
ADD (TO VIEW AP-A-P)
LDW390-28607 (P180 TO J240) B
ADD (TO VIEW AK-AK)
LDW390-21650 (P180 TO J701, J704, J1404) B
LDW390-28607 (P180 TO P898) B
LDW390-52951 (P180 TO E1452, E1453) B
VIEW AP-AP
SHEET 11.00 ZONE 52B
VIEW AK-AK
SHEET 10.00 ZONE 44 A
FOR CONTINUATION OF RUNS SEE
LDW280-52359 (REF)
ADD - LDW390-28607 (P180 TO P898) (B)
REVISE - LDW390-21650 (J704 TO
P180) WAS (J704 TO J701) B
REVISE VIEW AE-AE & VIEW
AF-AF ACCORDINGLY
(SHEET 10.00 ZONE 47B & 48B)
ADD: SPLICE AREA
E1452, E1453.
REVISE -
LDW390-52951 (P1410B TO
J1404, E1452, E1453) B WAS
(P1410B TO J1404, J701) B
REVISE VIEW AH-AH &
AG-AG ACCORDINGLY.
(SH. 10.00 ZONES 45B & 46B)
AE
AF
AG
AH
AJ
AJ
AE
AF
AG
AH
ADD: J180 (REF)
FUSE ASSY #1 (REF)
ADD
LDW390-21650 (P180
TO J701, J704, J1404) B
LDW390-28607 (P180
TO J240, P898) B
LDW390-52951 (P180
TO E1452, E1453) B
J180
AK
AK
+X293.5
AP
AP
AU
AU
LDW280-52360-1 INSTL.
-227 BULKHEAD
VIEW LOOKING FWD.
SHEET 9.00
ADD - LDW390-21607
(P180 - J240) B.
VIEW AU-AU
SHEET 11.00 ZONE 51A

FULL SIZE SHEET AREA (30 X 60) = 12.5 SQ. FT.
1/2 SIZE SHEET AREA (1/4 OF FULL SIZE) 3 SQ. FT.

DISCRIPTION OF EO

ON -1 INSTL. VIEW OF -227 (SH 9.00) ADDED P & J180 AND CABLE ASSEMBLIES LDW390-21650, -28607 & -52951 (EMI CODE B). CORRECTED CALLOUTS IN SECTION AJ-AJ, & VIEWS E-E H-H, AE-AE, AF-AF, AG-AG, AH-AH, AK-AK, AP-AP & AU-AU AS REQUIRED.

* EXISTING CLAMPS
** ADD GC500AA CLAMPS PER LPC280-23

5

DETAIL SPEC REQD		CLASS II ENGRG CHG	✓	CLASS I ENGRG CHG		LCD1752		CONTROL INFO NO.	LDW280A-79 3
REASON FOR EO: ADDITION OF 800 CYCLE FUSE ASSEMBLY CABLES				DESCRIPTION OF EO: SEE DESCRIPTION OF EO IN F/D				GRUMMAN EO RELEASE	JK 8/3
MODEL	EFFECTIVITY PROCURING ACT. NO.	GAEC UNIT NO.	SUB CONTR UNIT NO.	DRAWING REVISION REQD	DISPOSITION OF PARTS	BY	GROUP LEADER	STRESS GROUP	PROJ ENGR
LM		LM-2 (32)		REVISE DWG ✓ RECORD EO	REWORK ✓ SCRAP	DATE 7/24/67 VD1	7/20/67	8/1/67	8-2-67
PRIORITY	C	DRAWING TITLE	LINES INSTALLATION ELECTRONIC ~ A/S ~ AFT EQUIP. BAY		ENGINEERING ORDER	DRAWING NO.	LDW280-52360	EO NO.	37
8/7 X1392 ISSUED BY C. H. COHEN	SECTION	EQUIP LINES	GROUP NO.	332	PL	25	CODE IDENT NO.	26512	GRUMMAN AIRCRAFT ENGINEERING CORP BETHPAGE, L. I., N. Y.

02/02 NAS 9-1100

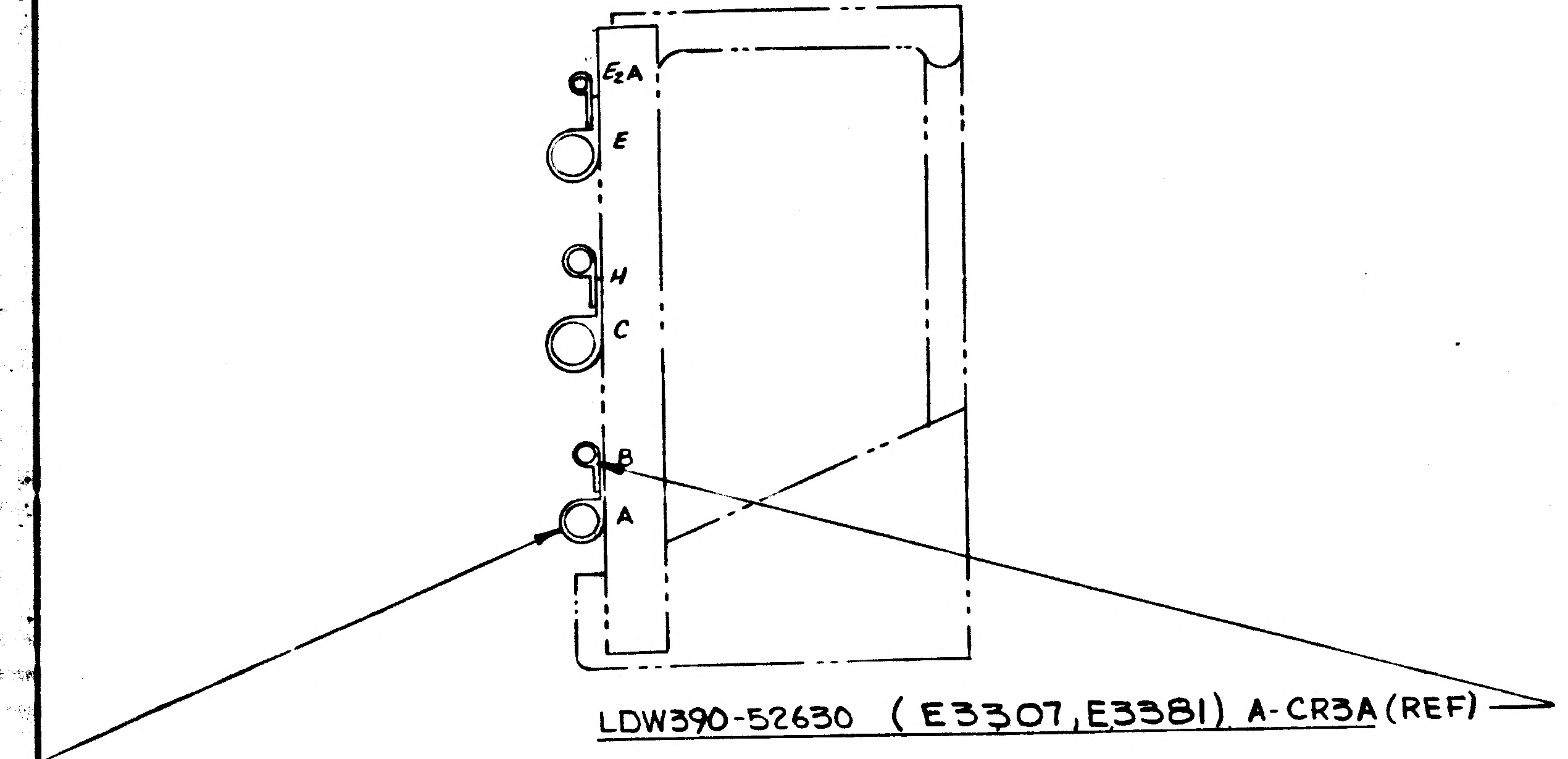
E2A
E
H
C
B
A
LDW390-52630 (E3307, E3381) A-CR3A (REF)
CP1B(J26B-P313B, J174, J67) LDW390-217.79 (REF)
CR3B(P44B-E3238) LDW390-52629 (REF)
CR3B(J703 E3238, E3270, E3241) LDW390-28958 (REF)

VIEW AM-AM
LKG OUTBD ~ YO
(ZONE 38 A)
SH 11.00 (ZONE 54 B)

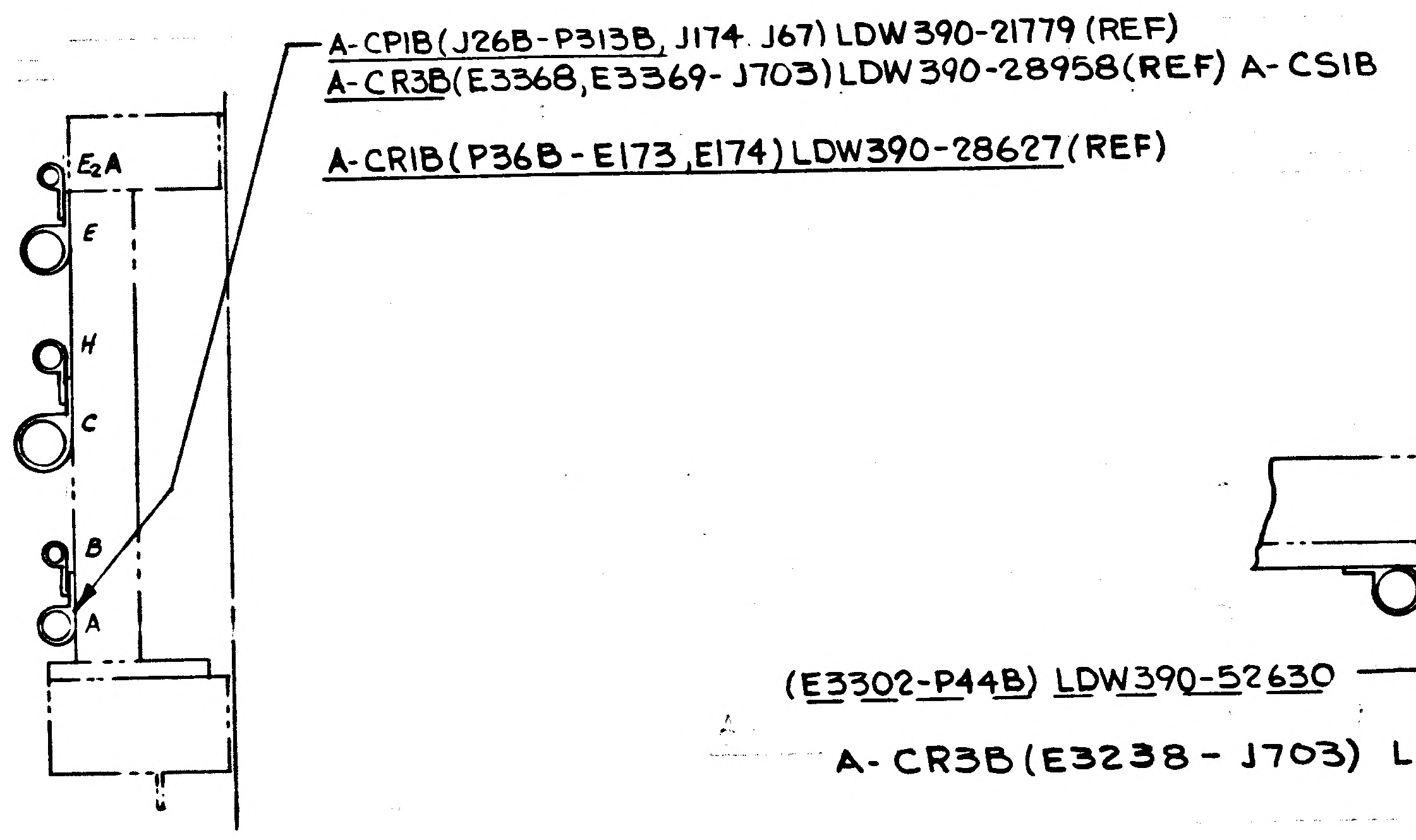
A-CP1B(J26B-P313B, J174 J67) LDW390-21779 (REF)
A-CR3B(E3368, E3369-J703) LDW390-28958 (REF) A-CS1B
A-CR1B(P36B-E173, E174) LDW390-28627 (REF)
E2A
E
H
C
B
A

VIEW AN-AN (ZONE 38A)
LKG INBD ~ + Y17.25
SH 11.00 (ZONE 53C)

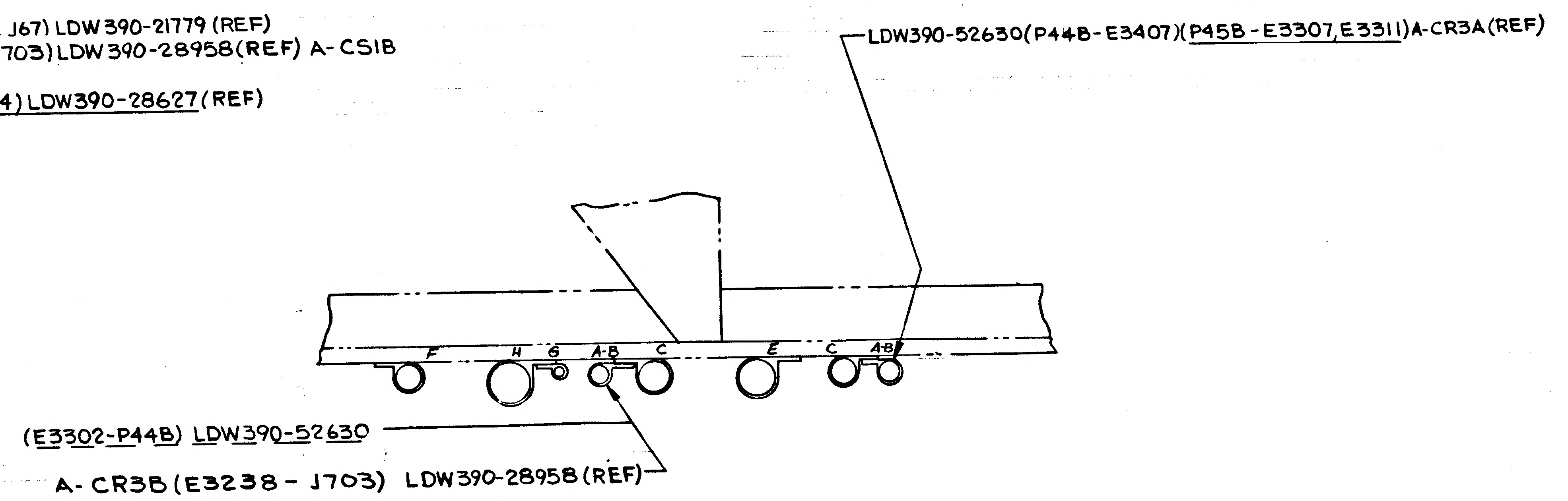
LDW390-52630(P44B-E3407)(P45B-E3307, E3311) A-CR3A (REF)
F
H
G
A-B
C
E
C
A-B
(E3302-P44B) LDW390-52630
A- CR3B (E3238 - J703) LDW390-28958 (REF)

VIEW AP-AP (ZONE 38A)
LKG DN AT X241.0
SH 11.00 (ZONE 51C & 52 B)

PRINTING INFO ONLY DWG SIZE 34 X 62
FULL SIZE SHEET AREA (34 X 62) = 14.6 SQ FT
1/2 SIZE SHEET AREA (1/4 OF FULL) = 3.7 SQ FT

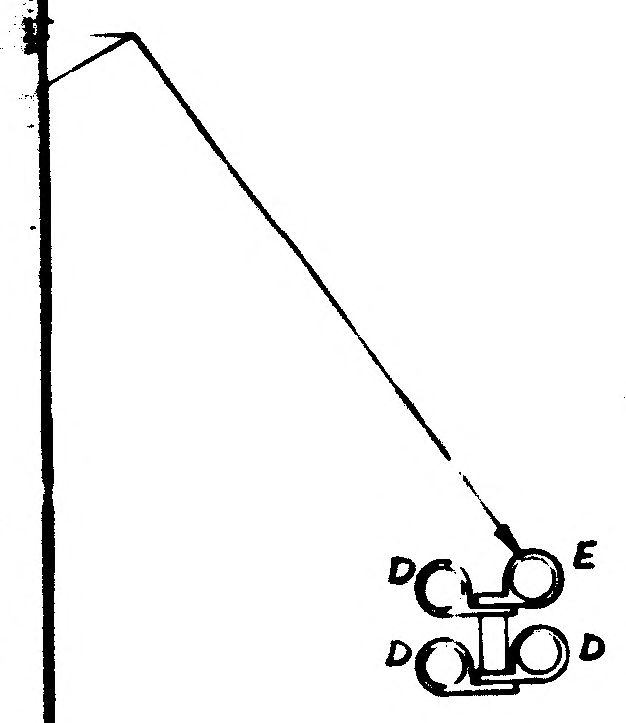

VIEW AX-AX
(ZONE 38B)
SH 11.00 (ZONE 54 B)

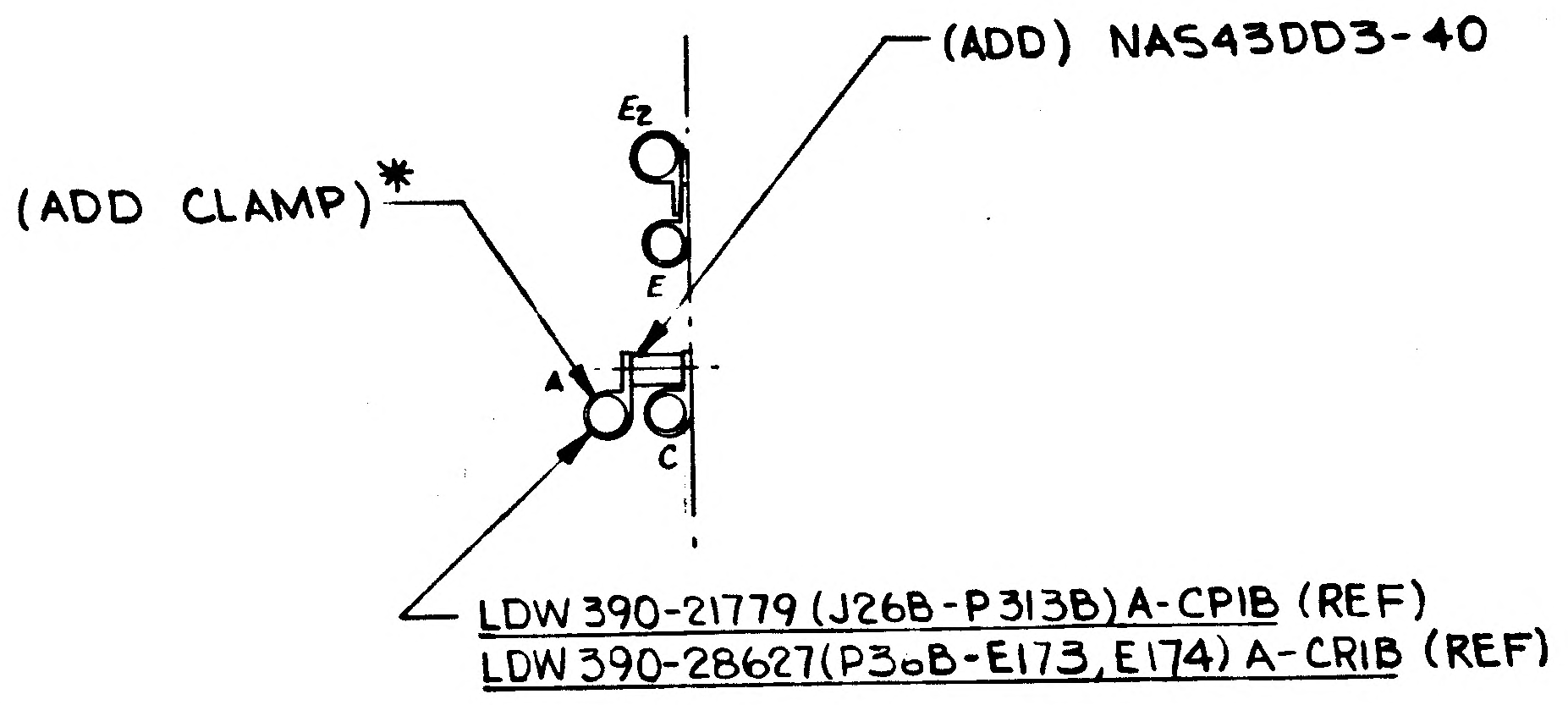
(ADD) NAS43DD3-40
(ADD CLAMP)*
E2
E
A
C
LDW390-21779 (J26B-P313B) A-CP1B (REF)
LDW390-28627 (P30B-E173, E174) A-CR1B (REF)

VIEW AV-AV (ZONES 38B)
SH 11.00 (ZONE 53B & 54B)

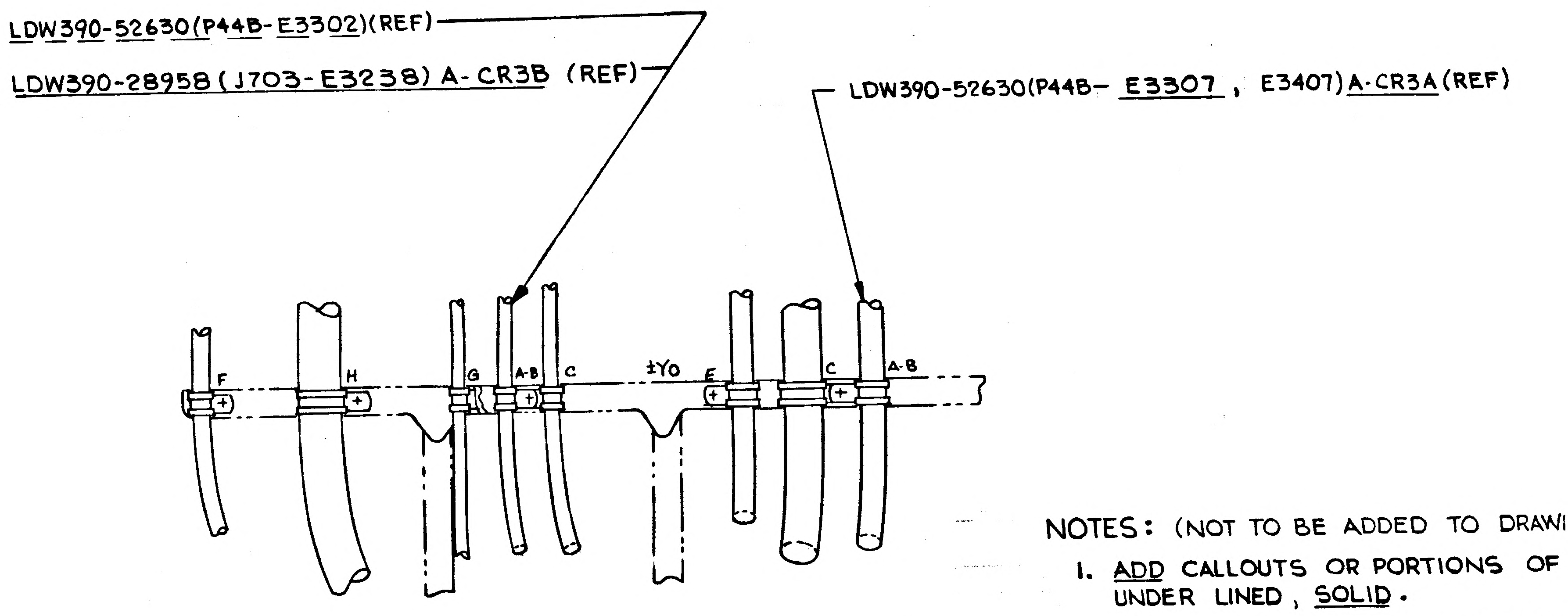
LDW390-52630 (P44B-E3302) (REF)
LDW390-28958 (J703-E3238) A-CR3B (REF)
LDW390-52630 (P44B- E3307, E3407) A-CR3A (REF)
F
H
G
A-B
C
±YO
E
C
A-B

VIEW AU-AU (ZONE 38A)
LKG UP ~ + X228.0
SH 11.00 (ZONE 51A & 52A)

NOTES: (NOT TO BE ADDED TO DRAWING)

1. ADD CALLOUTS OR PORTIONS OF CALLOUTS WHICH ARE, UNDER LINED, SOLID.
2. DELETE CALLOUTS OR PORTIONS OF CALLOUTS WHICH ARE, UNDER LINED, DASHED.
3. ADD GC500AA CLAMP PER LPC-280-23 WHERE SO INDICATED *.
4. THIS EO B7, (CONTROL NO. LDW280A-7563) MUST BE INCORPORATED IN CONJUNCTION WITH EO B6, (CONTROL NO. LDW280A-7421

5

DETAIL SPEC REQD		CLASS II ENGRG CHG	✓	CLASS I ENGRG CHG	
LCD-1306	CONTROL INFO NO. LDW280A-7563				
REASON FOR EO: TO ADD REDUNDANT WIRING	DESCRIPTION OF EO: REVISED WIRE ROUTING TO MAINTAIN EMI SEPERATION IN SECTIONS AU-AU, AP-AP, AN-AN, AV-AV, AM-AM, AL-AL, AX-AX, AZ-AZ, AND BA-BA	GRUMMAN EO RELEASE: JL 7-8-67			
MODEL	EFFECTIVITY PROCURING ACT. NO.	GAEC UNIT NO.	SUB CONTR UNIT NO.		
LM		LM-2 (32)			

DRAWING REVISION REQD: REVISE DWG	RECORD EO	DISPOSITION OF PARTS: REWORK	SCRAP	BY / DATE	SUPPORT	RELIAB GROUP	GROUP LEADER	STRESS GROUP	LIAISON ENGRG	PROJ ENGR	
✓		✓		6/23/67 VD1			JW 6-23-67	JV 6/27/67		6/27	7-8-67

PRIORITY	DRAWING TITLE	ENGINEERING ORDER DRAWING NO.	EO NO.
C	LINES INSTALLATION ELECTRONIC ASCENT STAGE ~ AFT EQUIP. BAY	LDW280-52360	B7

ISSUED BY DAN CAROLEO SECTION EQUIP. LINES/VD1 GROUP NO. EX: 1154 332 PL 25 CODE IDENT NO. 26512 (B)

GRUMMAN AIRCRAFT ENGINEERING CORP
BETHPAGE, L. I., N. Y.

ENG 32.3 REV 3-65

02/02 NAS 9-1100

ENG 38.2 REV 3-66

GRUMMAN AIRCRAFT ENGINEERING CORP.
CODE IDENT NO. 26512
ENGINEERING ORDER

DWG. NO. LDW280-52360		EO NO. B8
CONTROL INFO NO. LDW280A 8034		

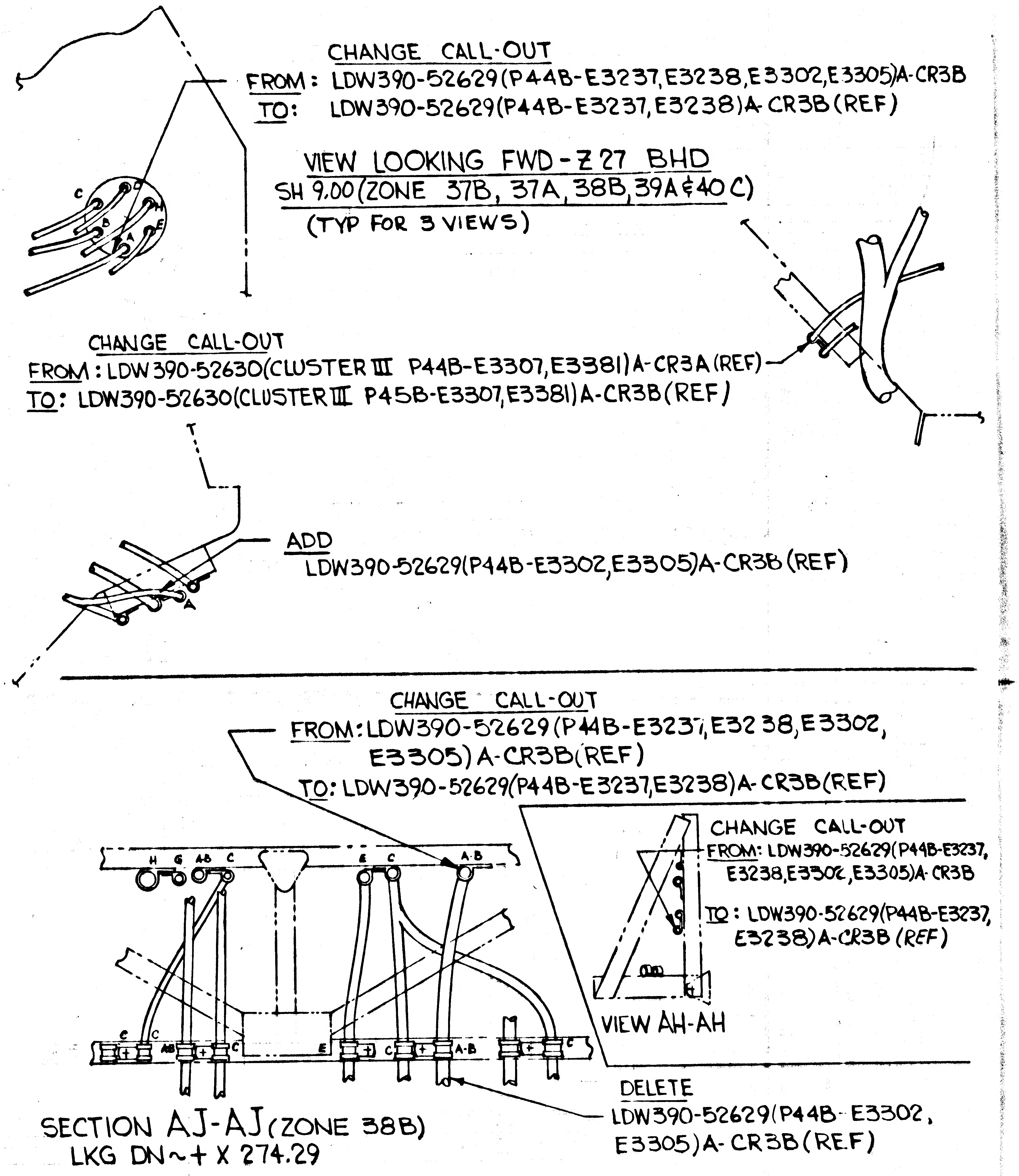

CHANGE CALL-OUT
FROM: LDW390-52629(P44B-E3237,E3238,E3302,E3305)A-CR3B
TO: LDW390-52629(P44B-E3237,E3238)A-CR3B(REF)

VIEW LOOKING FWD-Z27 BHD
SH 9.00(ZONE 37B, 37A, 38B, 39A & 40C)
(TYP FOR 3 VIEWS)

CHANGE CALL-OUT
FROM: LDW390-52630(CLUSTER III P44B-E3307,E3381)A-CR3A(REF)
TO: LDW390-52630(CLUSTER III P45B-E3307,E3381)A-CR3B(REF)

ADD
LDW390-52629(P44B-E3302,E3305)A-CR3B(REF)

CHANGE CALL-OUT
FROM: LDW390-52629(P44B-E3237,E3238,E3302,
E3305)A-CR3B(REF)
TO: LDW390-52629(P44B-E3237,E3238)A-CR3B(REF)

CHANGE CALL-OUT
FROM: LDW390-52629(P44B-E3237,
E3238,E3302,E3305)A-CR3B
TO: LDW390-52629(P44B-E3237,
E3238)A-CR3B (REF)

VIEW AH-AH

DELETE
LDW390-52629(P44B-E3302,
E3305)A-CR3B(REF)

SECTION AJ-AJ(ZONE 38B)
LKG DN~+X 274.29

THIS IS A REVISION OF B6

DETAIL SPEC REQ		CL II ENGRG CHG	✓	CL I ENGRG CHG	LCD 1306 ok

REASON FOR EO	DESCRIPTION OF EO	GAEC EO RELEASE
TO ADD REDUNDANT WIRING	ROUTED REDUNDANT WIRING IN VIEWS, VIEW LKG FWD-Z27 BHD & SECTION AJ-AJ	JK 7/22/7

MODEL	PROCURING ACTIVITY NO.	GAEC UNIT NO.	SUB CONTR UNIT NO.
LM		LM-2 (32)	

DRAWING CHANGE REQD		DISPOSITION OF PARTS										
✓ REVISE DWG	RECORD EO	✓ REWORK	SCRAP	APPROVED BY								
				DATE	7/18/67			7/17/67	7/20/67		7/20	7-21-67
					VDI	SUPPORT	RELIAB. GROUP	GROUP LEADER	STRESS GROUP	LIAISON ENGRG	PROJ ENGRG	

PRIORITY	DRAWING TITLE	DRAWING NO.	EO NO.
C	LINES INST'L ~ ELECTRICAL ASCENT STAGE ~ AFT BAY	LDW280-52360	B8

ISSUED BY DAN CAROLEO EX: 1154 SECTION EQUIP. LINES/VDI GROUP NO. 332 PL 25

01 NAS 9-1100

ENG 32.2 REV 3-66

B

GRUMMAN AIRCRAFT ENGINEERING CORP.
CODE IDENT NO. 26512
ENGINEERING ORDER

*

DWG. NO.	LDW280-52360	EO NO.	B9
CONTROL INFO NO.	LDW280A8016		

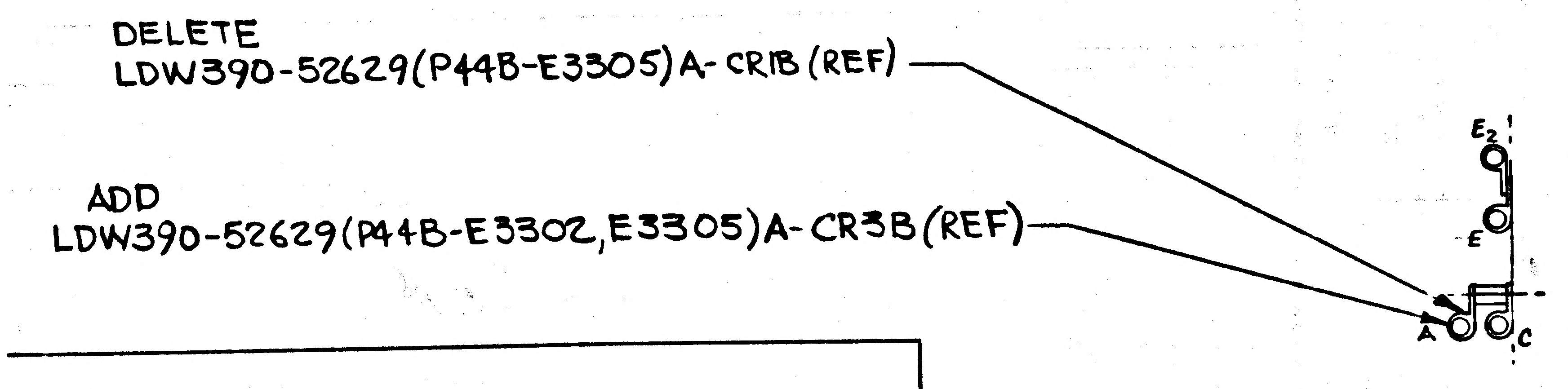
DELETE
LDW390-52629(P44B-E3305)A-CRIB (REF)
ADD
LDW390-52629(P44B-E3302,E3305)A-CR3B (REF)
E2
E
A
C

VIEW AV-AV (ZONE 38B)
SH 11.00 (ZONE 53B & 54B)

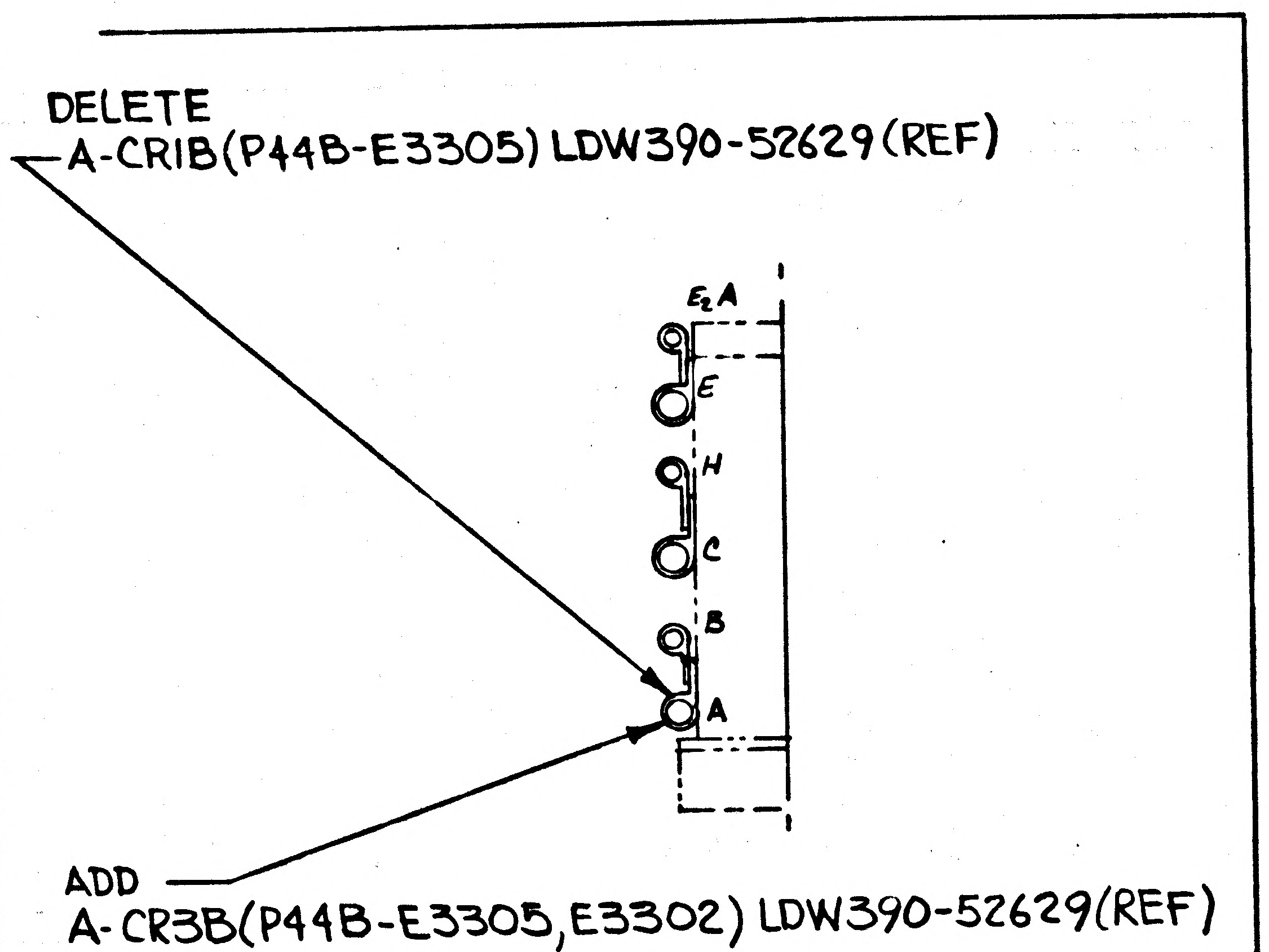
DELETE
A-CRIB(P44B-E3305) LDW390-52629 (REF)
E2A
E
H
C
B
A
ADD
A-CR3B(P44B-E3305,E3302) LDW390-52629(REF)

VIEW AN-AN (ZONE 38A)
LKG INBD ~ +Y17.25
SH 11.00 (ZONE 53C)

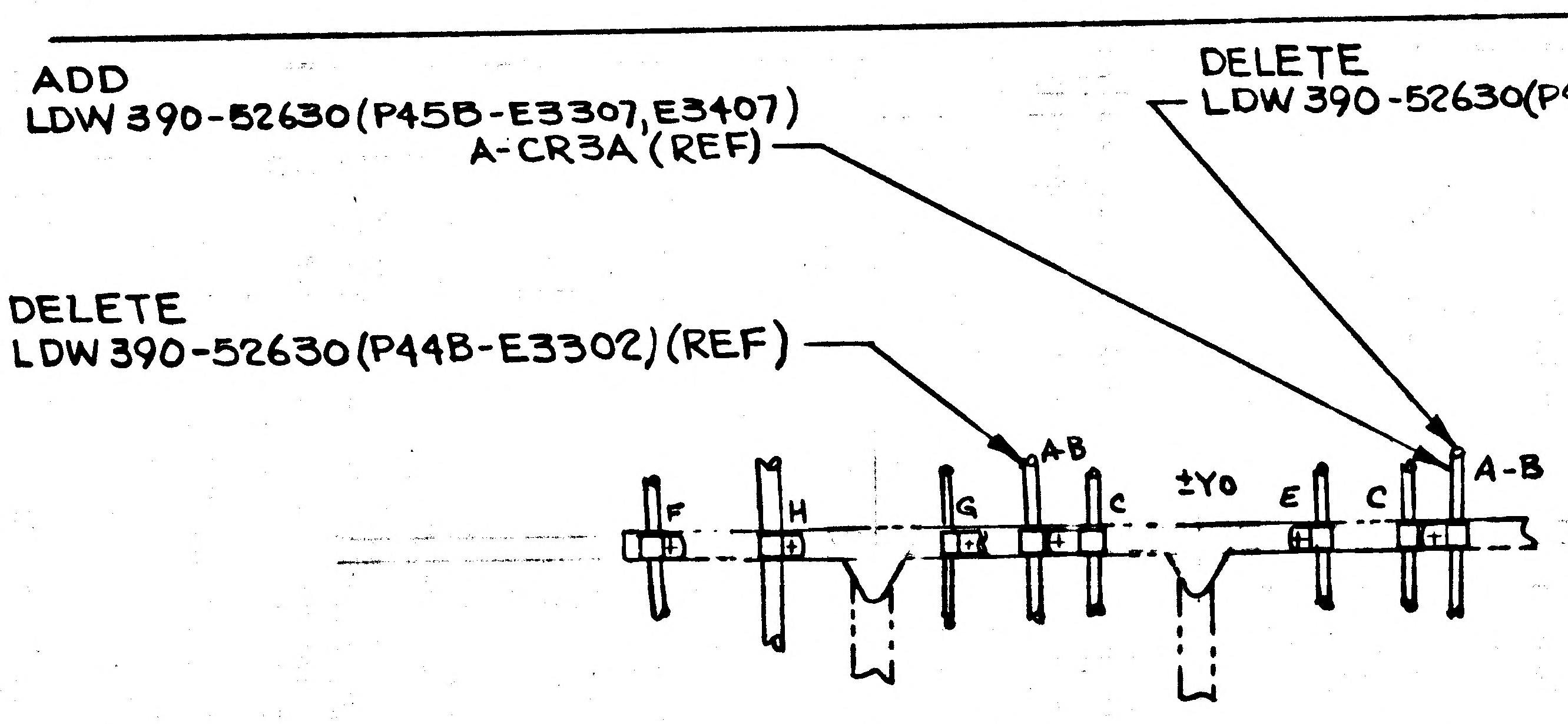
ADD
LDW 390-52630(P45B-E3307,E3407)
A-CR3A (REF)
DELETE
LDW 390-52630(P44B-E3307,E3407)A-CR3A
DELETE
LDW 390-52630(P44B-E3302)(REF)
F
H
G
A-B
C
±Y0
E
C
A-B

VIEW AU-AU (ZONE 38A)
LKG UP ~ + X228.0
SH 11.00 (ZONE 51A & 52A)

THIS IS A REVISION OF EO B7

DETAIL SPEC REQ		CL II ENGRG CHG	✓	CL I ENGRG CHG		LCD 1306 ok

5

REASON FOR EO	DESCRIPTION OF EO	Ⓡ GAEC EO RELEASE
TO ADD REDUNDANT WIRING	ROUTED REDUNDANT WIRING IN VIEWS AU-AU, AN-AN & AV-AV	VK 7/22/7 C

MODEL	PROCURING ACTIVITY NO.	GAEC UNIT NO.	SUB CONTR UNIT NO.
LM		LM-2 (32)	

DRAWING CHANGE REQD		DISPOSITION OF PARTS	
REVISE DWG ✓	RECORD EO	REWORK ✓	SCRAP

APPROVED BY				JW	JL			
DATE	7/18/67			7/17/67	7/21/67		7/21	7-21-67
	VD1	SUPPORT	RELIAB. GROUP	GROUP LEADER	STRESS GROUP	LIAISON ENGRG	PROJ ENGRG	

PRIORITY	DRAWING TITLE	DRAWING NO.	EO NO.
C	LINES INSTLATION ELECTRONIC ASCENT STAGE ~ AFT EQUIP. BAY	LDW280-52360	B9

ISSUED BY DAN CAROLEO EX 1154 SECTION EQUIP. LINES/VD1 GROUP NO. 332 PL 25

01
NAS 9-1100

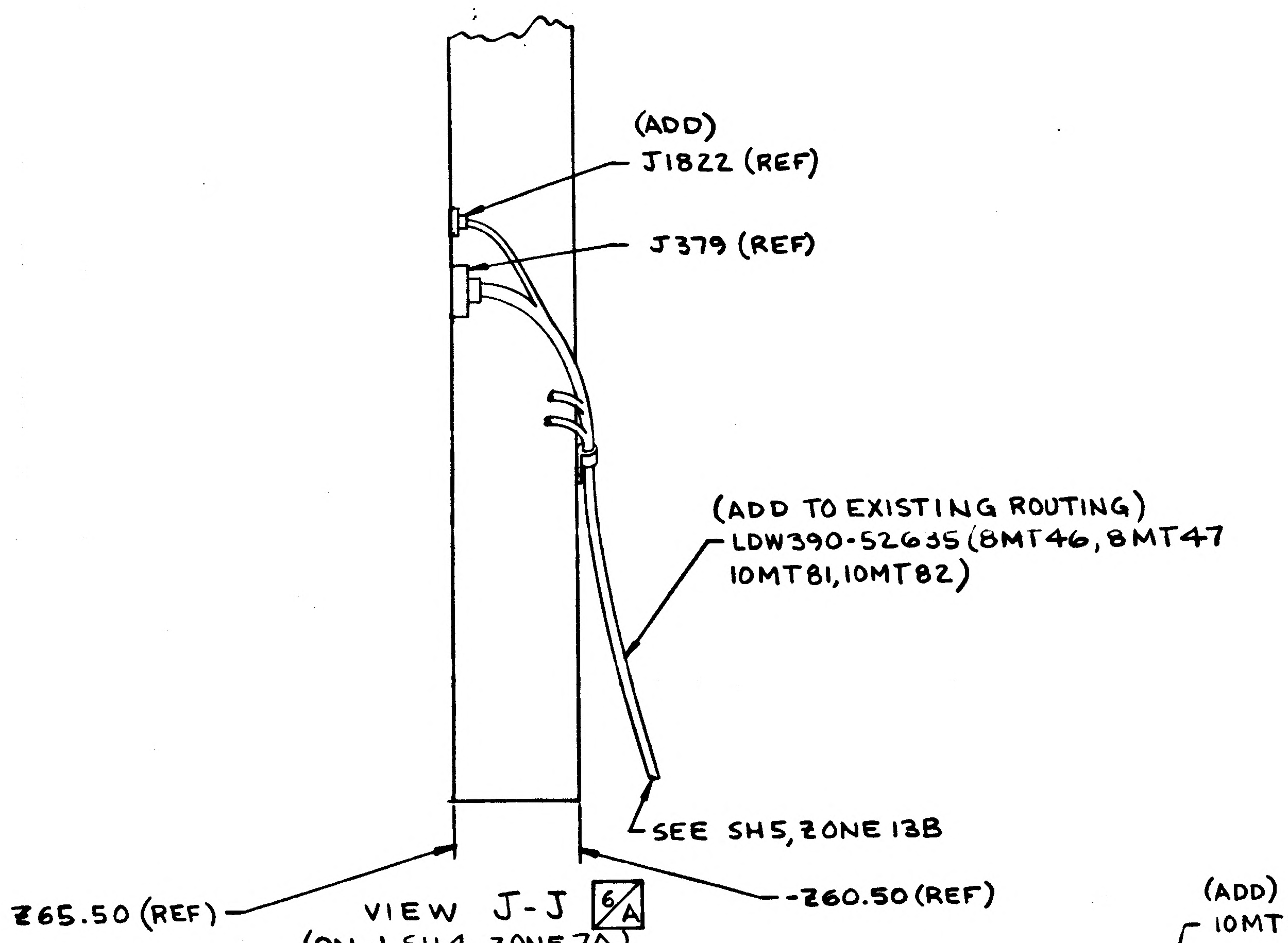
(ADD)
J1822 (REF)
J379 (REF)
(ADD TO EXISTING ROUTING)
LDW390-52635 (8MT46, 8MT47
10MT81, 10MT82)
SEE SH5, ZONE 13B
Z65.50 (REF)
-Z60.50 (REF)

VIEW J-J 6/A
(ON-1, SH 4, ZONE 7A)

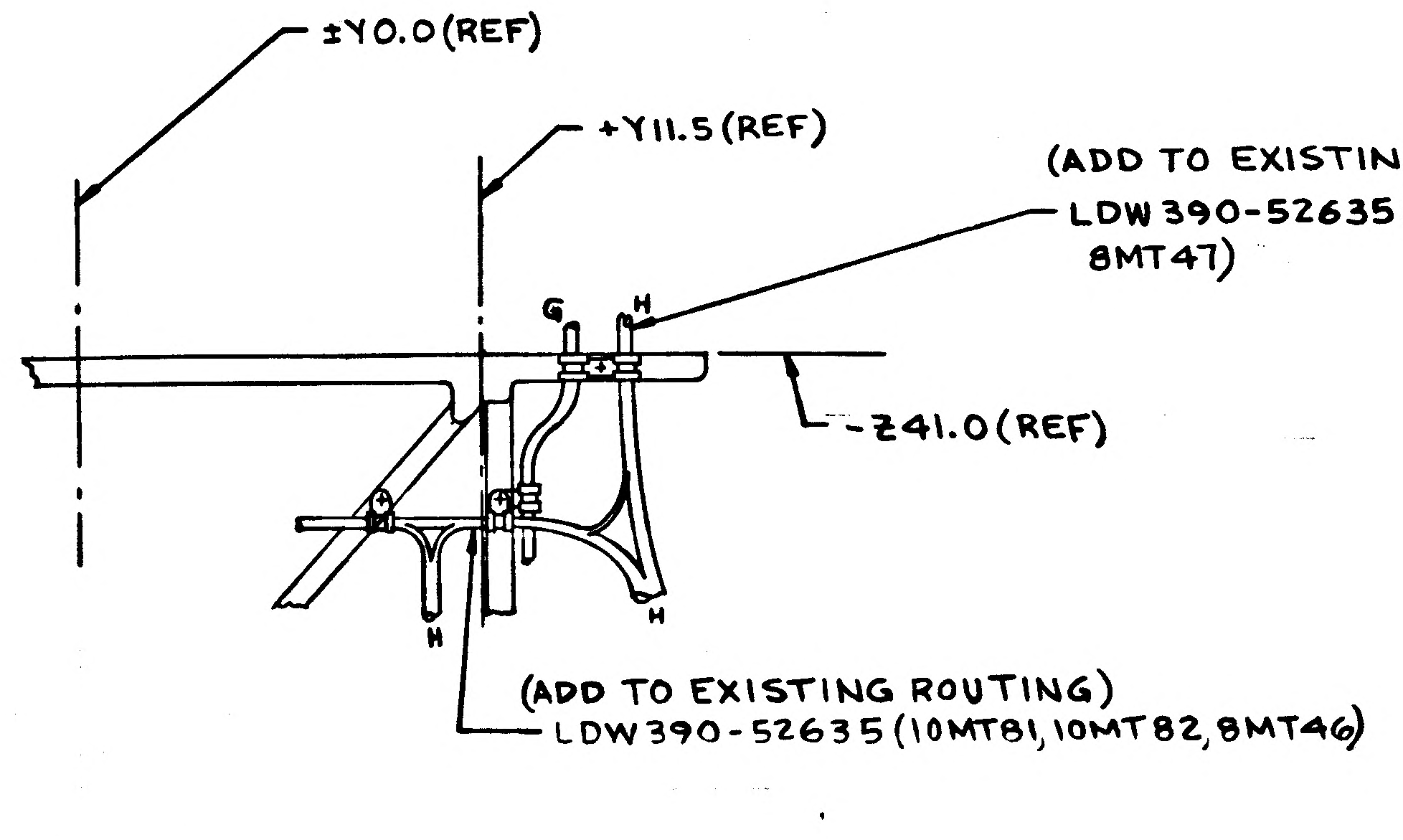
±Y0.0 (REF)
+Y11.5 (REF)
(ADD TO EXISTING ROUTING)
LDW390-52635 (10MT81, 10MT82, 8MT46,
8MT47)
-Z41.0 (REF)
G
H
H
H
(ADD TO EXISTING ROUTING)
LDW390-52635 (10MT81, 10MT82, 8MT46)

VIEW AU-AU ZONE 38A
LKG UP ~ +X228.0
(ON-1, SH 11, ZONE 51A)

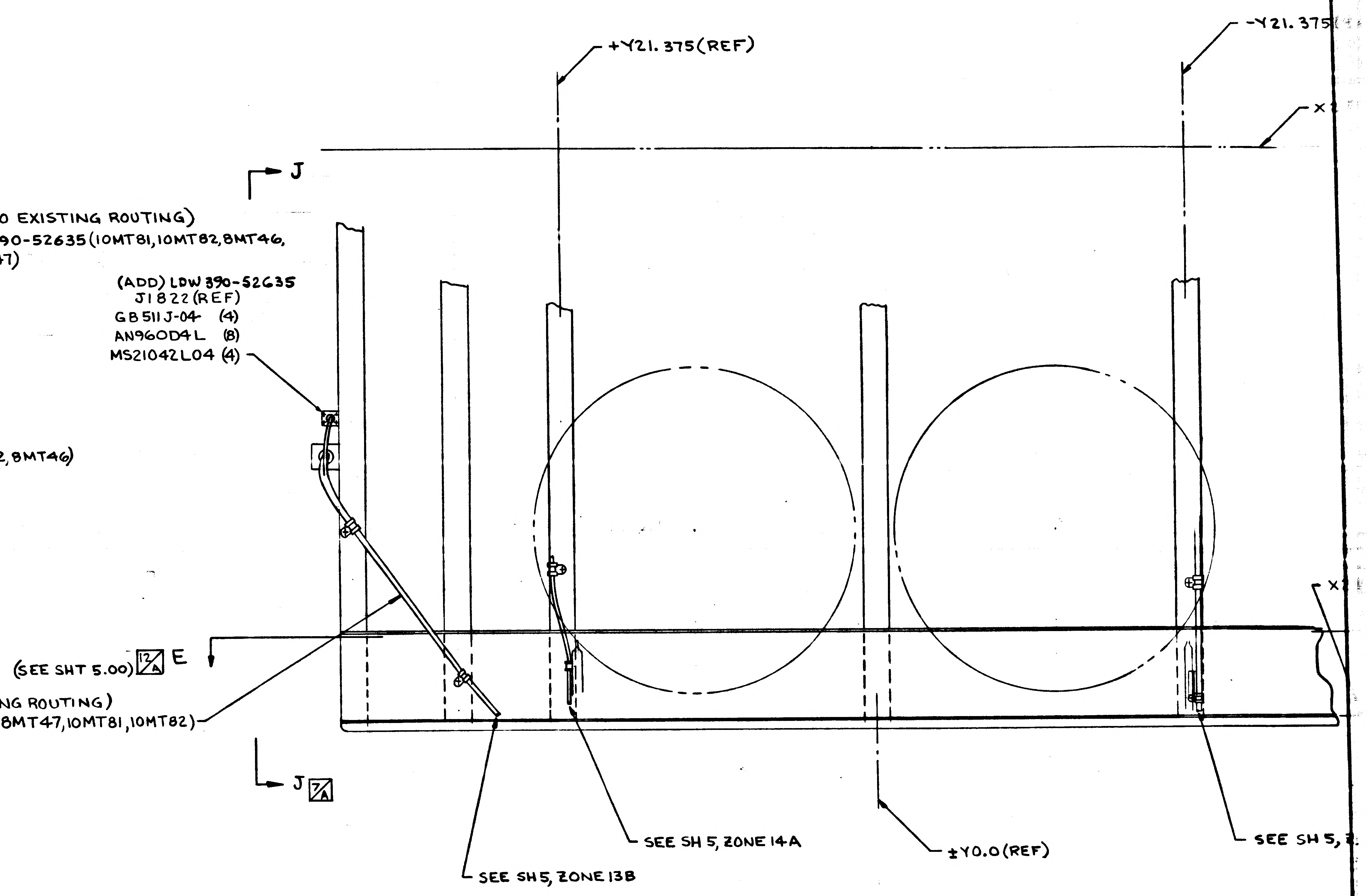
+Y21.375 (REF)
-Y21.375
X
J
(ADD) LDW390-52635
J1822 (REF)
GB511J-04 (4)
AN960D4L (8)
MS21042L04 (4)
(SEE SHT 5.00) 12/A E
(ADD TO EXISTING ROUTING)
LDW390-52635 (8MT46, 8MT47, 10MT81, 10MT82)
J 6/A
SEE SH 5, ZONE 13B
SEE SH 5, ZONE 14A
±Y0.0 (REF)
SEE SH 5,
X

AFT EQUIP RACK
VIEW LKG AFT
(ON-1, SH 4, ZONE 5A)

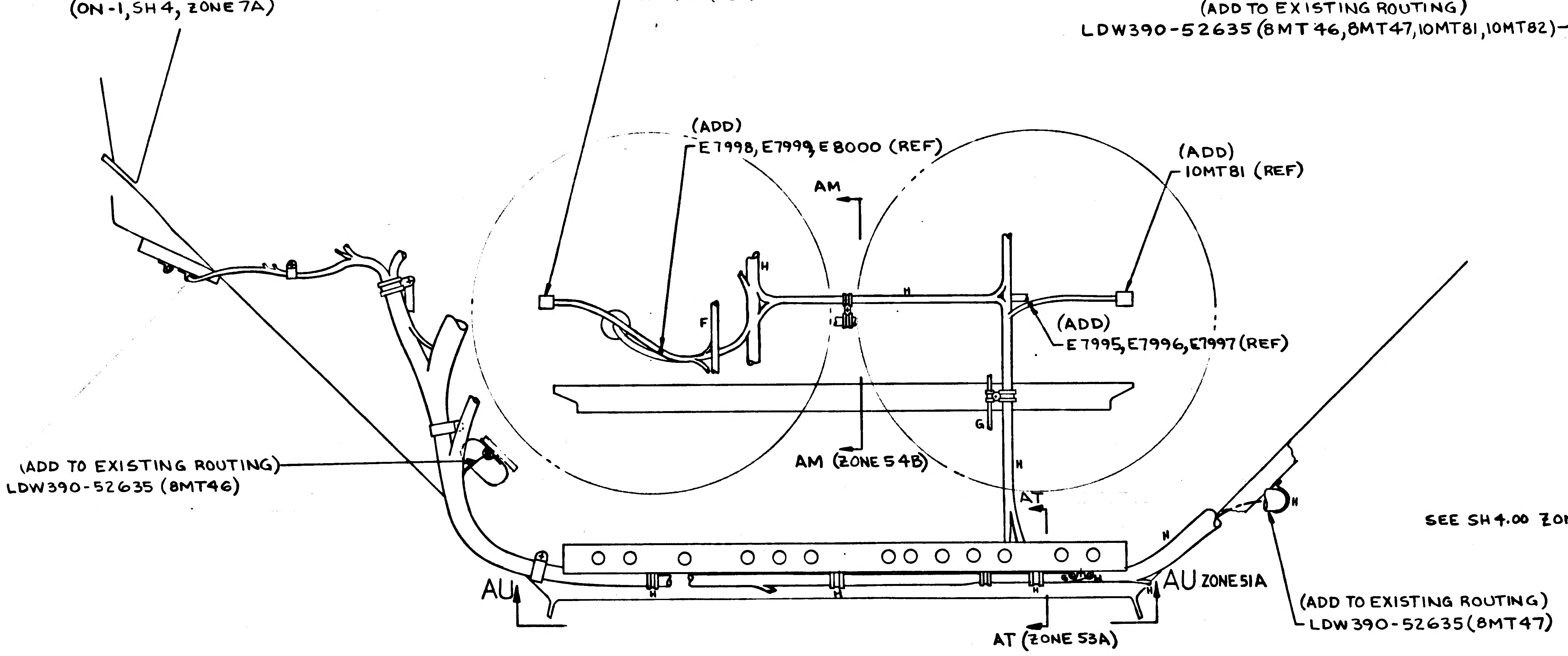
(ADD)
10MT82 (REF)
(ADD)
E7998, E7999, E8000 (REF)
AM
(ADD)
10MT81 (REF)
H
F
H
H
(ADD)
E7995, E7996, E7997 (REF)
G
AM (ZONE 54B)
H
AT
(ADD TO EXISTING ROUTING)
LDW390-52635 (8MT46)
AU
AU ZONE 51A
H
AT (ZONE 53A)
(ADD TO EXISTING ROUTING)
LDW390-52635 (8MT47)

VIEW LKG FWD ~ -Z27 BHD
(ON-1, SH 9, ZONE 39A)

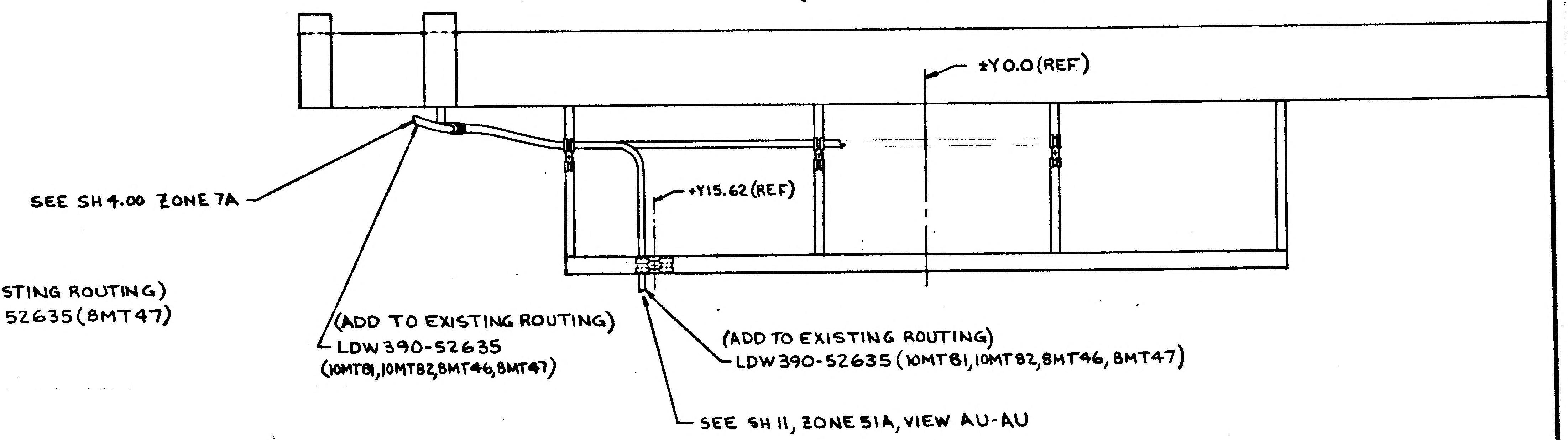
±Y0.0 (REF)
SEE SH 4.00 ZONE 7A
+Y15.62 (REF)
(ADD TO EXISTING ROUTING)
LDW390-52635
(10MT81, 10MT82, 8MT46, 8MT47)
(ADD TO EXISTING ROUTING)
LDW390-52635 (10MT81, 10MT82, 8MT46, 8MT47)
SEE SH 11, ZONE 51A, VIEW AU-AU

VIEW E-E 6/A (SEE SH 4.00)
AFT EQUIP BAY ECS
LOOKING DOWN X238.50
(ON-1, SH 5, ZONE 12A)

01/02 NAS 9-1100

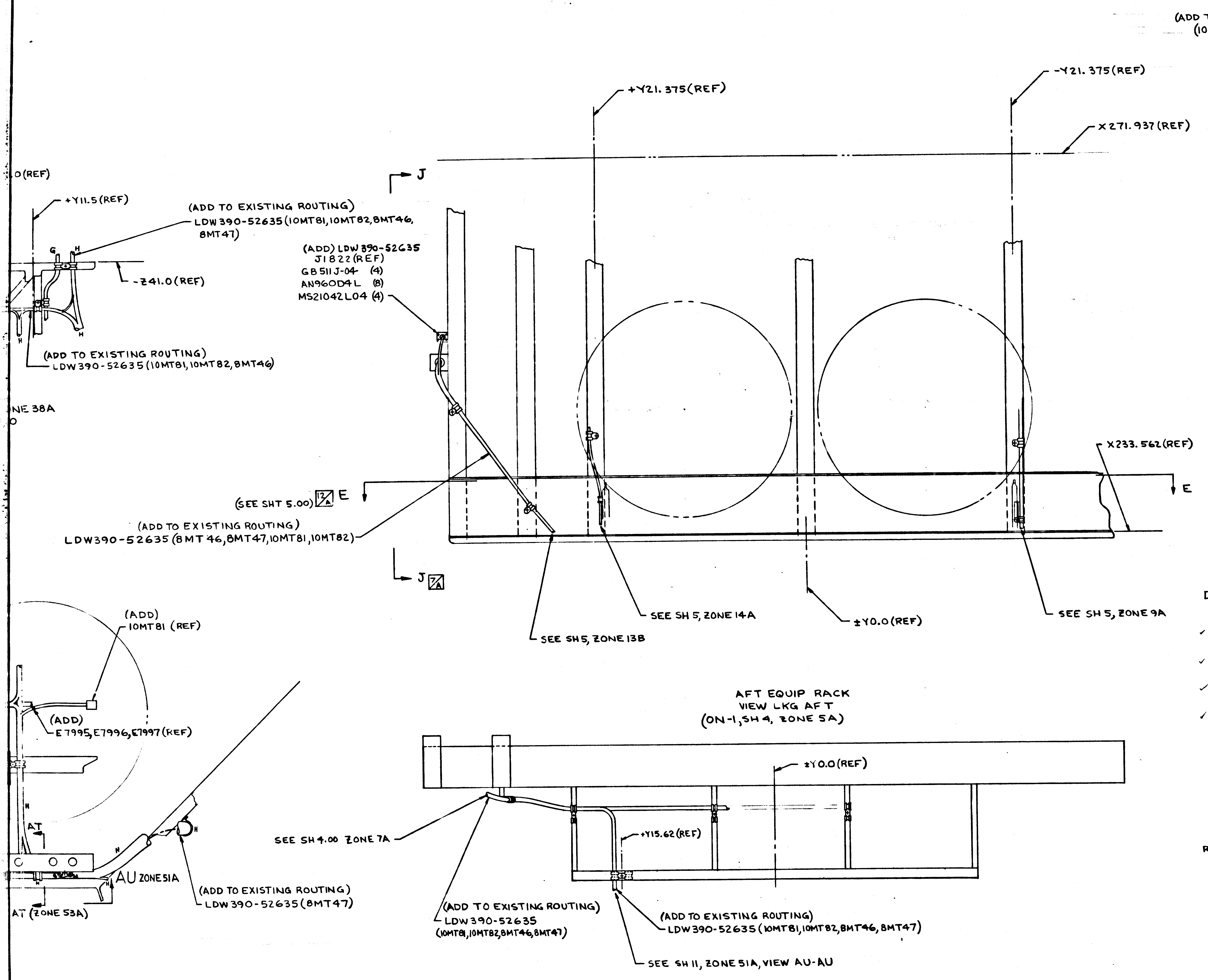
.0(REF)
+Y11.5(REF)
(ADD TO EXISTING ROUTING)
LDW390-52635(10MT81,10MT82,8MT46,
8MT47)
G
H
-Z41.0(REF)
H
H
(ADD TO EXISTING ROUTING)
LDW390-52635(10MT81,10MT82,8MT46)
NE 38A
(ADD) LDW390-52635
J1822(REF)
GB511J-04 (4)
AN960D4L (8)
MS21042L04 (4)
J
+Y21.375(REF)
-Y21.375(REF)
X271.937(REF)
X233.562(REF)
(SEE SHT 5.00) 12/A E
E
(ADD TO EXISTING ROUTING)
LDW390-52635(8MT46,8MT47,10MT81,10MT82)
J 7/A
SEE SH5, ZONE 13B
SEE SH 5, ZONE 14A
±Y0.0(REF)
SEE SH 5, ZONE 9A
(ADD)
10MT81 (REF)
(ADD)
E7995,E7996,E7997(REF)
H
AT
H
AU ZONE 51A
AT (ZONE 53A)
(ADD TO EXISTING ROUTING)
LDW390-52635(8MT47)
SEE SH 4.00 ZONE 7A
±Y0.0(REF)
+Y15.62(REF)
(ADD TO EXISTING ROUTING)
LDW390-52635
(10MT81,10MT82,8MT46,8MT47)
(ADD TO EXISTING ROUTING)
LDW390-52635(10MT81,10MT82,8MT46,8MT47)
SEE SH 11, ZONE 51A, VIEW AU-AU

AFT EQUIP RACK
VIEW LKG AFT
(ON-1, SH 4, ZONE 5A)

VIEW E-E 6/A (SEE SH 4.00)
AFT EQUIP BAY ECS
LOOKING DOWN X238.50
(ON-1, SH 5, ZONE 12A)

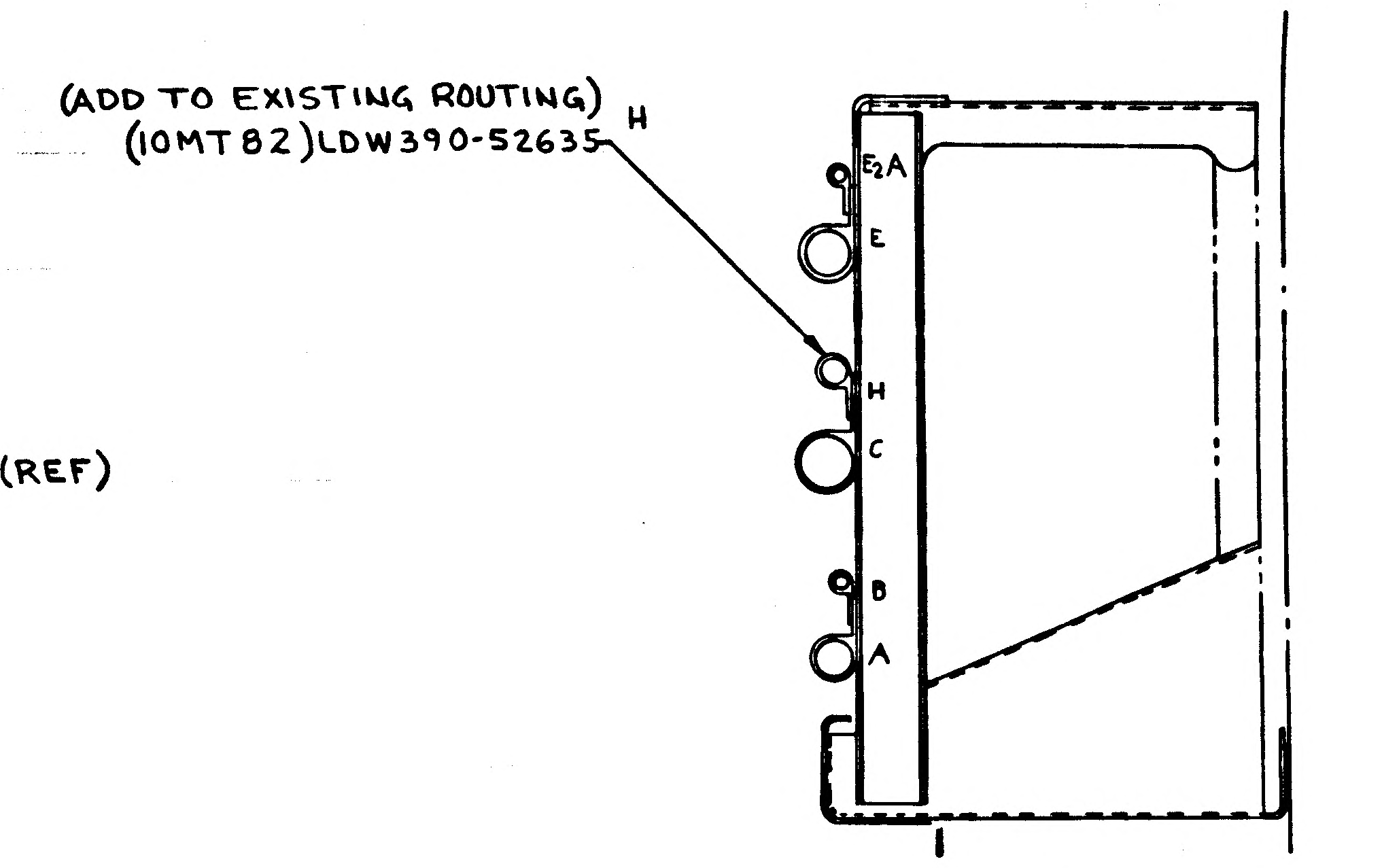
(ADD TO EXISTING ROUTING)
(10MT82)LDW390-52635
H
E2A
E
H
C
B
A

VIEW AM-AM
(ON-1, SH 11, ZONE 54B)

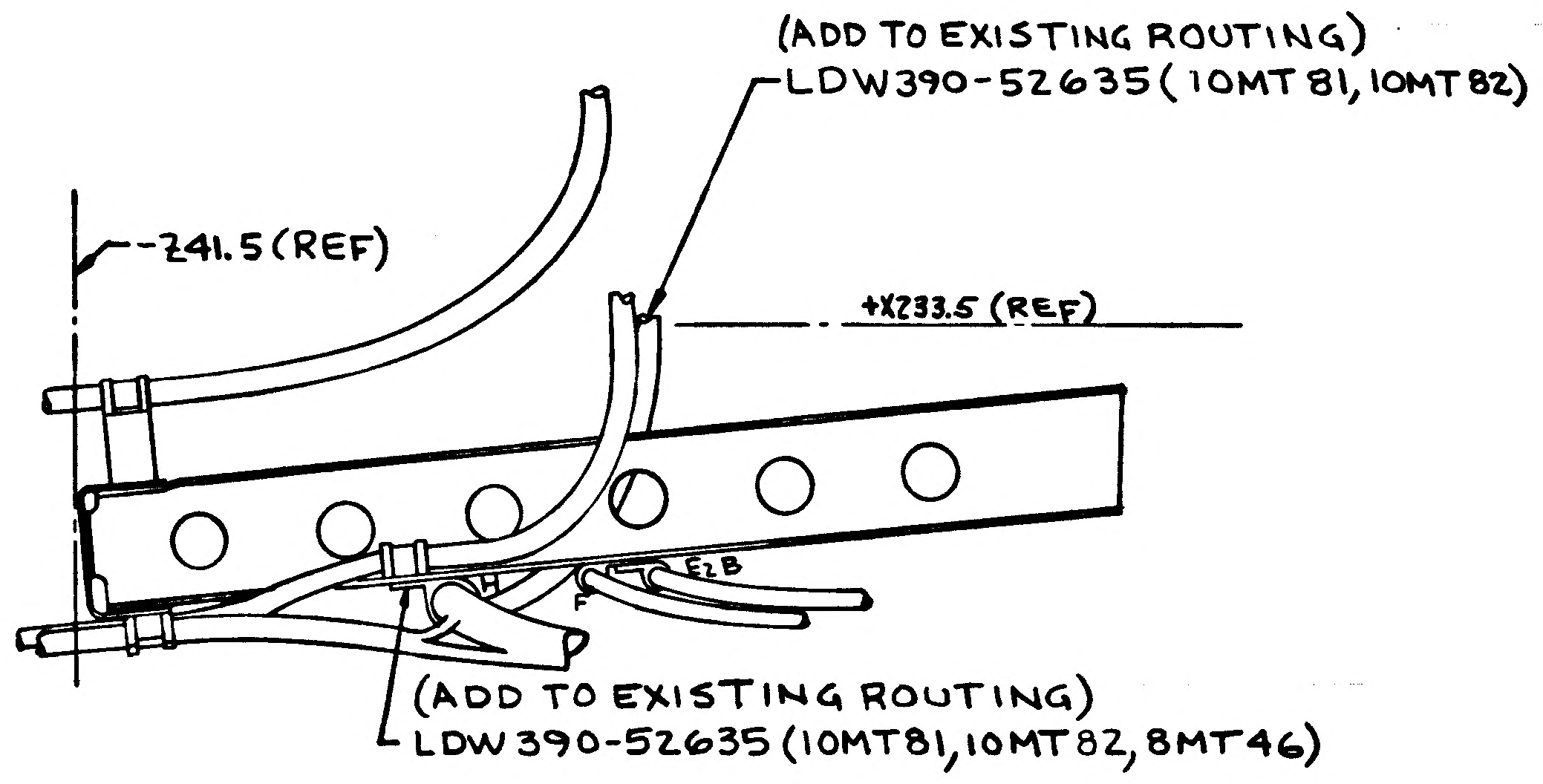
(ADD TO EXISTING ROUTING)
LDW390-52635(10MT81,10MT82)
-Z41.5(REF)
+X233.5 (REF)
E2B
F
(ADD TO EXISTING ROUTING)
LDW390-52635(10MT81,10MT82,8MT46)

VIEW AT-AT
(ON-1, SH 11, ZONE 53A)

PRINTING INFO ONLY
FULL SIZE SHEET AREA (30×70). 14.0 SQ. FT.
1/2 SIZE SHEET AREA (1/4 OF FULL). 3.5 SQ. FT.

DESCRIPTION OF E.O.
ON-1 INSTL
IN VIEW OF AFT EQUIP RACK, VIEW LKG AFT, SH4, ZONE 5A, ADDED: J1822 (REF)
✓ GB511J-04-2 (4), AN960D4L(8), MS21042L04(4), ADDED TO EXISTING ROUTING:
LDW390-52635(10MT81, 10MT82, 8MT46, 8MT47).
✓ IN VIEW E-E, AFT EQUIP BAY ECS, LKG DOWN X238.50, SH5, ZONE 12A, ADDED TO EXISTING ROUTING:
LDW390-52635 (10MT81, 10MT82, 8MT46, 8MT47).
✓ IN VIEW AU-AU, ZONE 38A, LKG UP~ +X228.0, SH11, ZONE 51A, ADDED TO EXISTING ROUTING:
LDW390-52635 (10MT81, 10MT82, 8MT46, 8MT47).
✓ IN VIEW LKG FWD~ - Z27 BHD, SH9, ZONE 39A, ADDED TO EXISTING ROUTING: LDW390-52635
(8MT46) LDW390-52635 (8MT47). ADDED E7998, E7999, E8000(REF).
E7995, E7996, E7997 (REF), 10MT81 (REF), 10MT82(REF)
IN VIEW J-J, SH4, ZONE 7A, ADDED TO EXISTING ROUTING: LDW360-52635(8MT46, 8MT47,
10MT81, 10MT82), ADDED: J1822(REF).
IN VIEW AM-AM, ON SH11, ZONE 54B ADDED TO EXISTING ROUTING: (10MT82) LDW390-52635
IN VIEW AT-AT SH 11, ZONE 53A, ADDED TO EXISTING ROUTING: LDW 390-52635(10MT81, 10MT82, 8MT46),
LDW390-52635(10MT81, 10MT82)

REVISE CLAMP SIZES WHERE REQ D AS PER LPC 280-23.

NOTES FOR REFERENCE:

ALL LDW390 CABLE ASSY NUMBERS ARE FOR REF ONLY

02702 NAS 9-1100

5

DETAIL SPEC REQD	☐	CLASS II ENGRG CHG	☒	CLASS I ENGRG CHG	☐	LCD 1299					CONTROL INFO NO. LDW280A 7233	
REASON FOR EO ADDITION OF TRANSDUCERS FOR GSE CHECK OUT.				DESCRIPTION OF EO SEE ABOVE							GRUMMAN EO RELEASE JK 7/20/[illegible]	
MODEL	EFFECTIVITY PROCURING ACT. NO.	GAEC UNIT NO.	SUB CONTR UNIT NO.	DRAWING REVISION REQD		DISPOSITION OF PARTS		BY / DATE				
LM		LM-2 (32)		✓ REVISE DWG	RECORD EO	✓ REWORK	SCRAP	7/24/67 VDI	SUPPORT	RELIAB GROUP	JW 7/24/67 GROUP LEADER	7-24-67 STRESS GROUP
											LIAISON ENGRG	7-24 PROJ ENGR
				PRIORITY C	DRAWING TITLE LINES INSTALLATION ELECTRONIC ASCENT STAGE AFT EQUIP BAY.				ENGINEERING ORDER DRAWING NO. LDW280-52360			EO NO. B10
X1153 7- -67 ISSUED BY R.EBERLE	SECTION VDI (EQUIP LINES)	GROUP NO. 332	PL 25	CODE IDENT NO. 26512	Ⓑ	GRUMMAN AIRCRAFT ENGINEERING CORP BETHPAGE, L. I., N. Y.						

ENG 32.3 REV 3-66

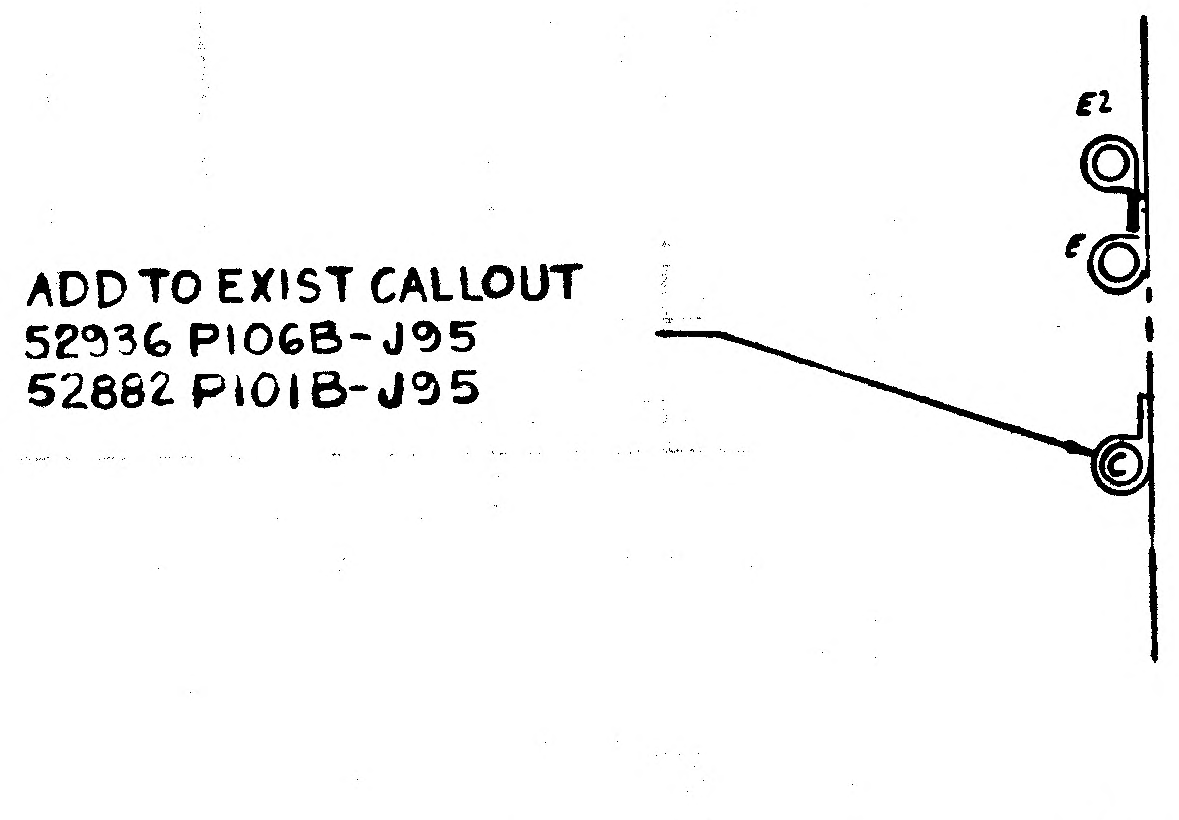
E2
E
ADD TO EXIST CALLOUT
52936 P106B-J95
52882 P101B-J95

VIEW AV-AV
ZONE 53B SH 11 (REF)

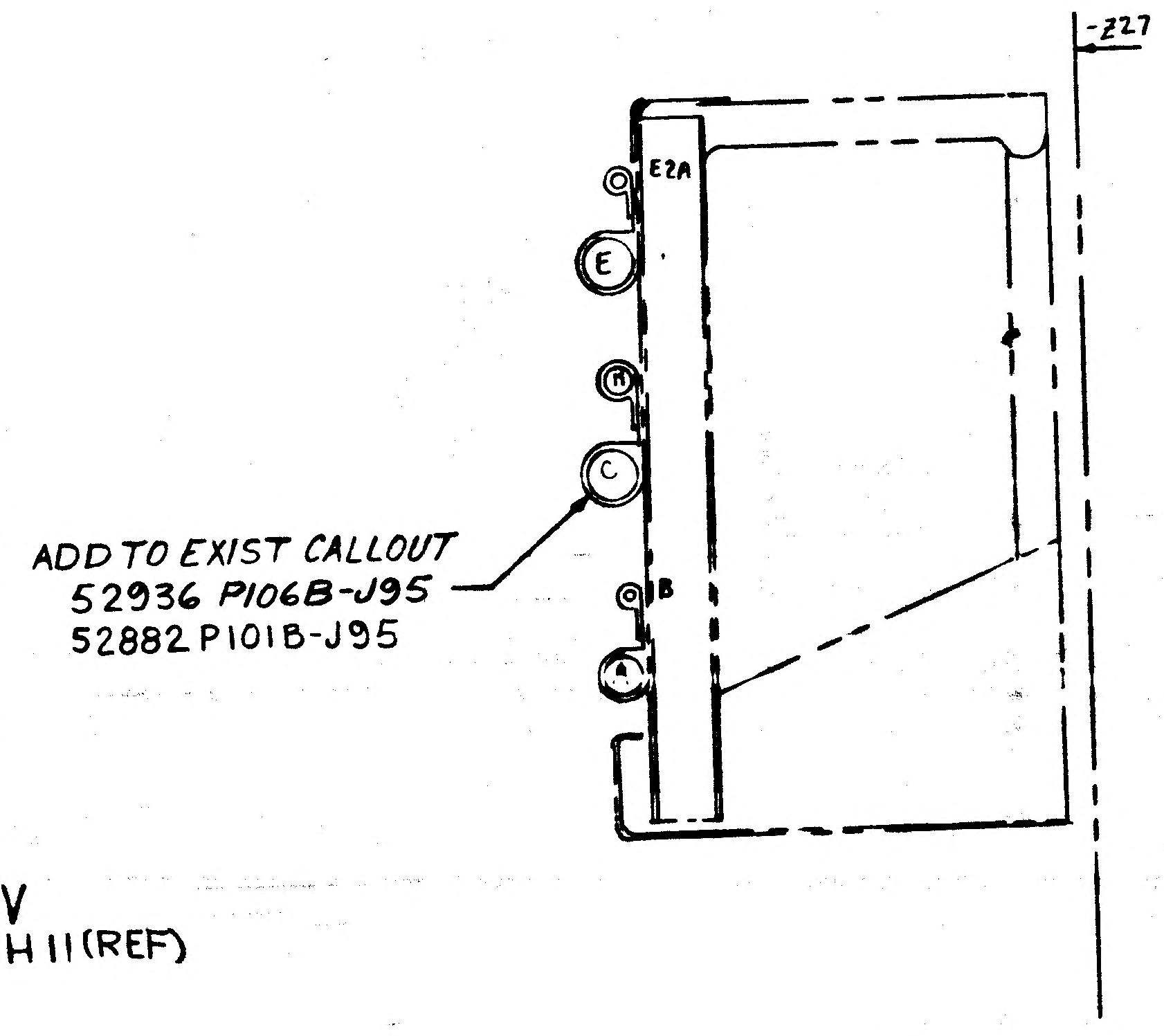
-Z27
E2A
E
C
B
A
ADD TO EXIST CALLOUT
52936 P106B-J95
52882 P101B-J95

VIEW AM-AM
ZONE 54 B SH 11 (REF)

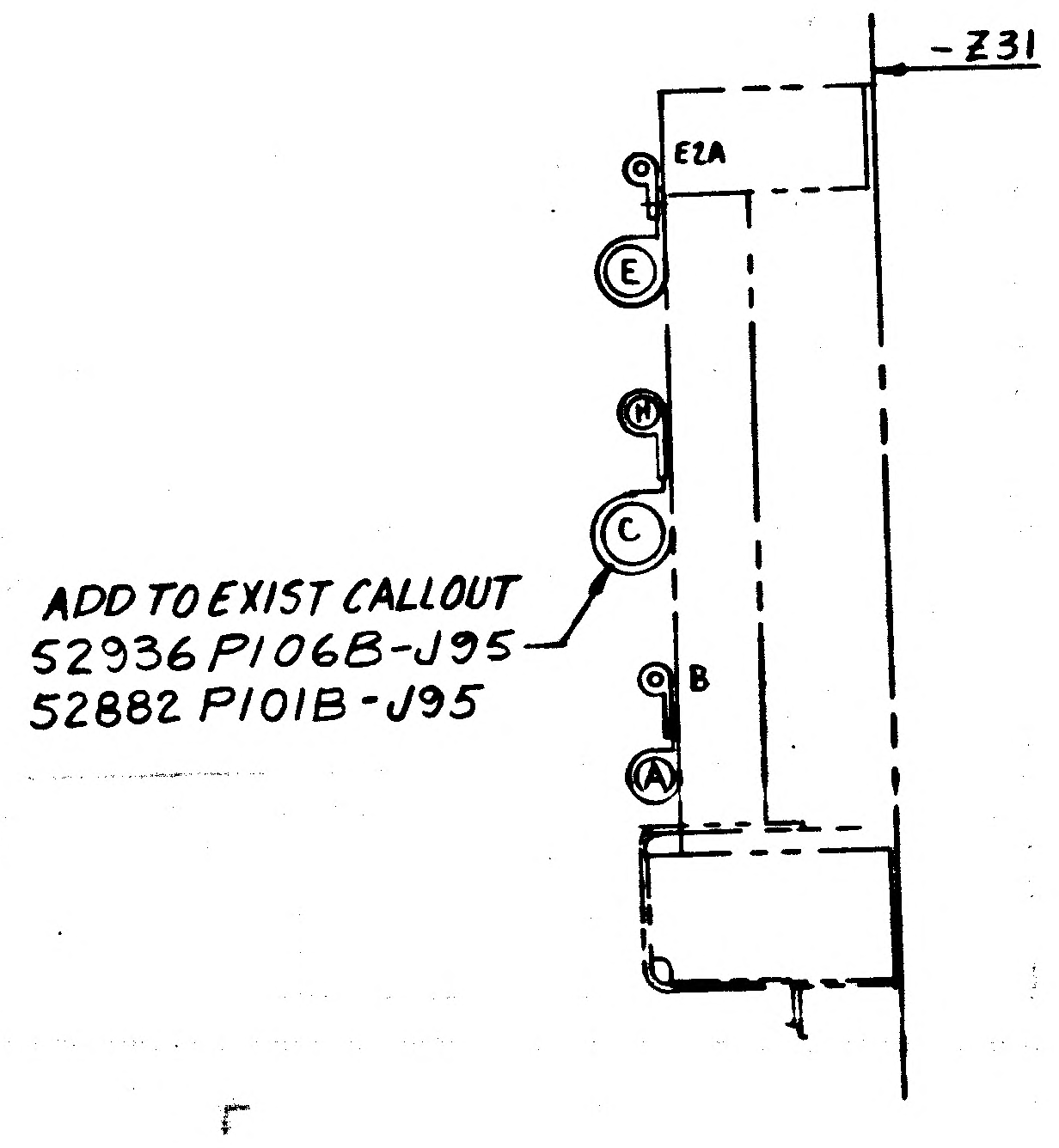
-Z31
E2A
E
D
C
B
A
ADD TO EXIST CALLOUT
52936 P106B-J95
52882 P101B-J95

VIEW AN-AN
ZONE 53B SH 11 (REF)

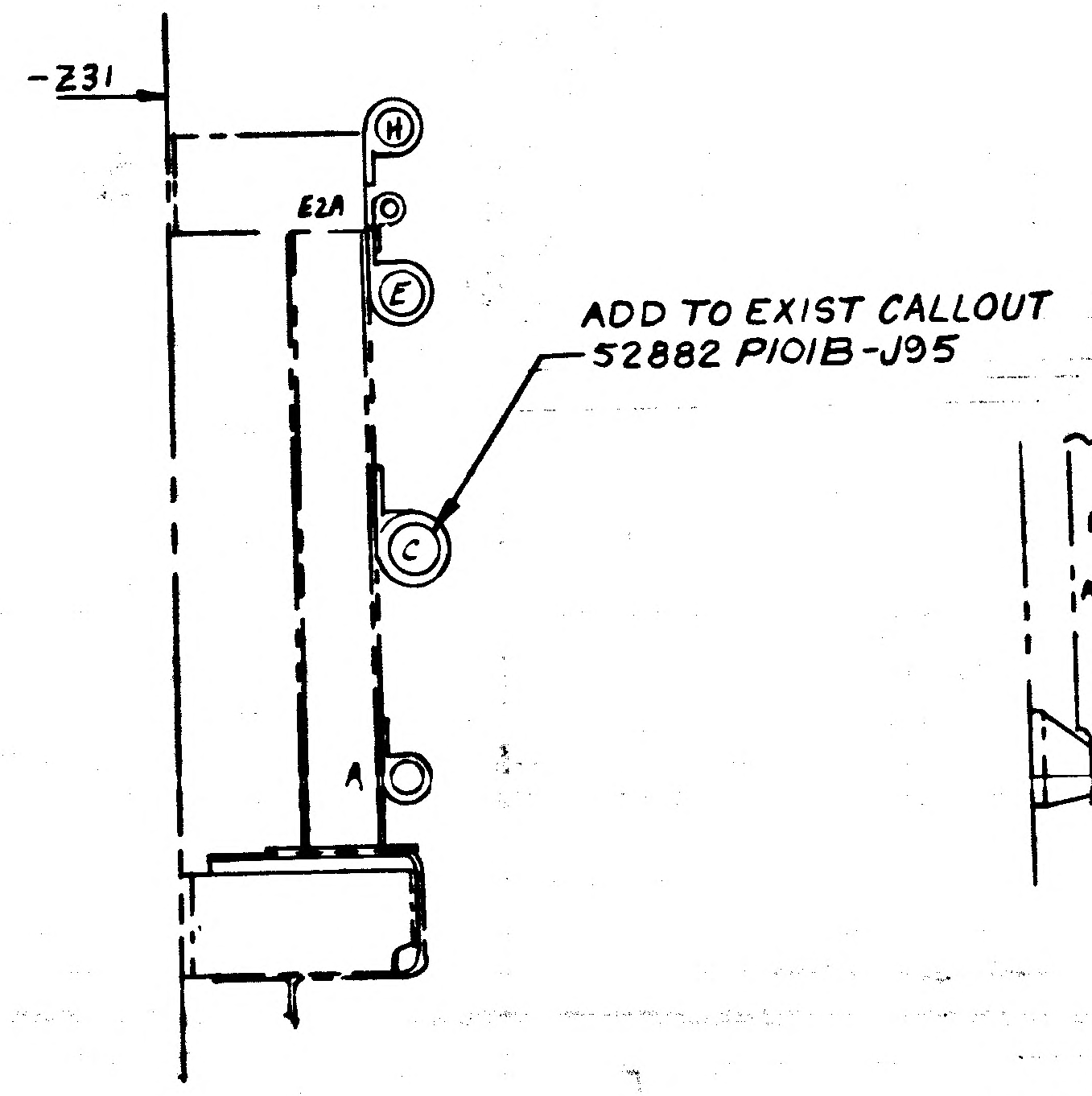
-Z31
H
E2A
F
C
A
ADD TO EXIST CALLOUT
52882 P101B-J95

VIEW AL-AL
ZONE 55 B SH 11 (REF)

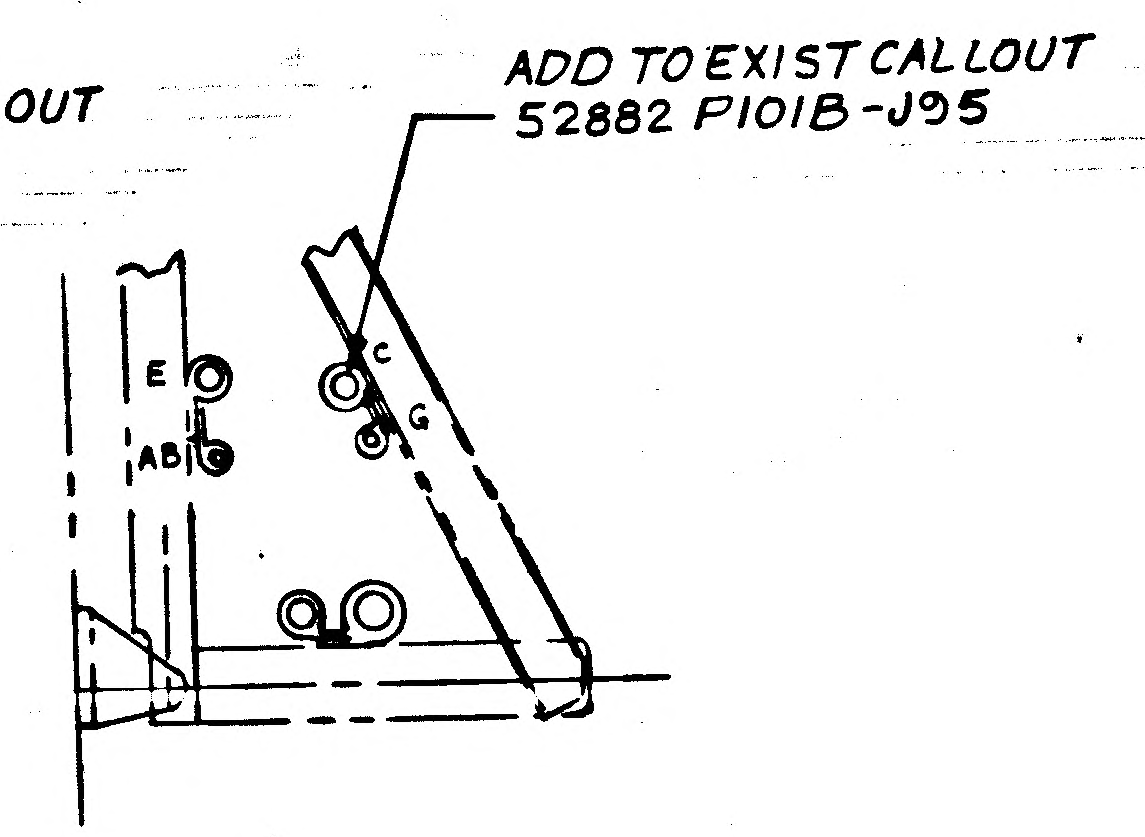
ADD TO EXIST CALLOUT
52882 P101B-J95
E
AB
C
G

VIEW AE-AE
ZONE 48B SH 10 (REF)

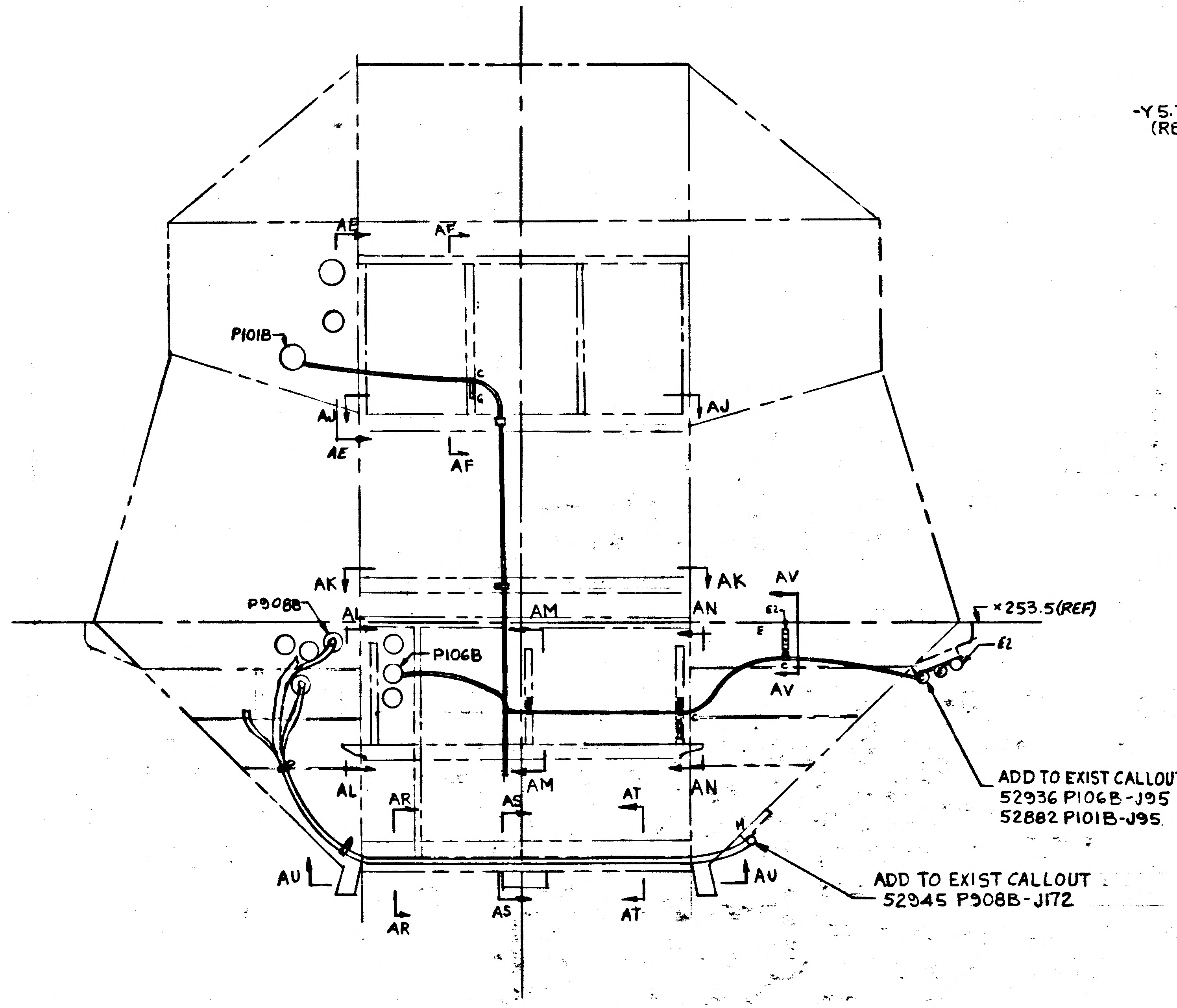
AE
AF
P101B
AJ
AE
AF
AJ
AK
AK
AV
P908B
AL
AM
AN
E2
+X253.5 (REF)
P106B
AV
AR
AS
AM
AT
AN
AU
AU
AR
AS
AT
ADD TO EXIST CALLOUT
52936 P106B-J95
52882 P101B-J95
ADD TO EXIST CALLOUT
52945 P908B-J172

VIEW LKG FWD -Z27 BHD
ZONE 38 & 39 SH 9

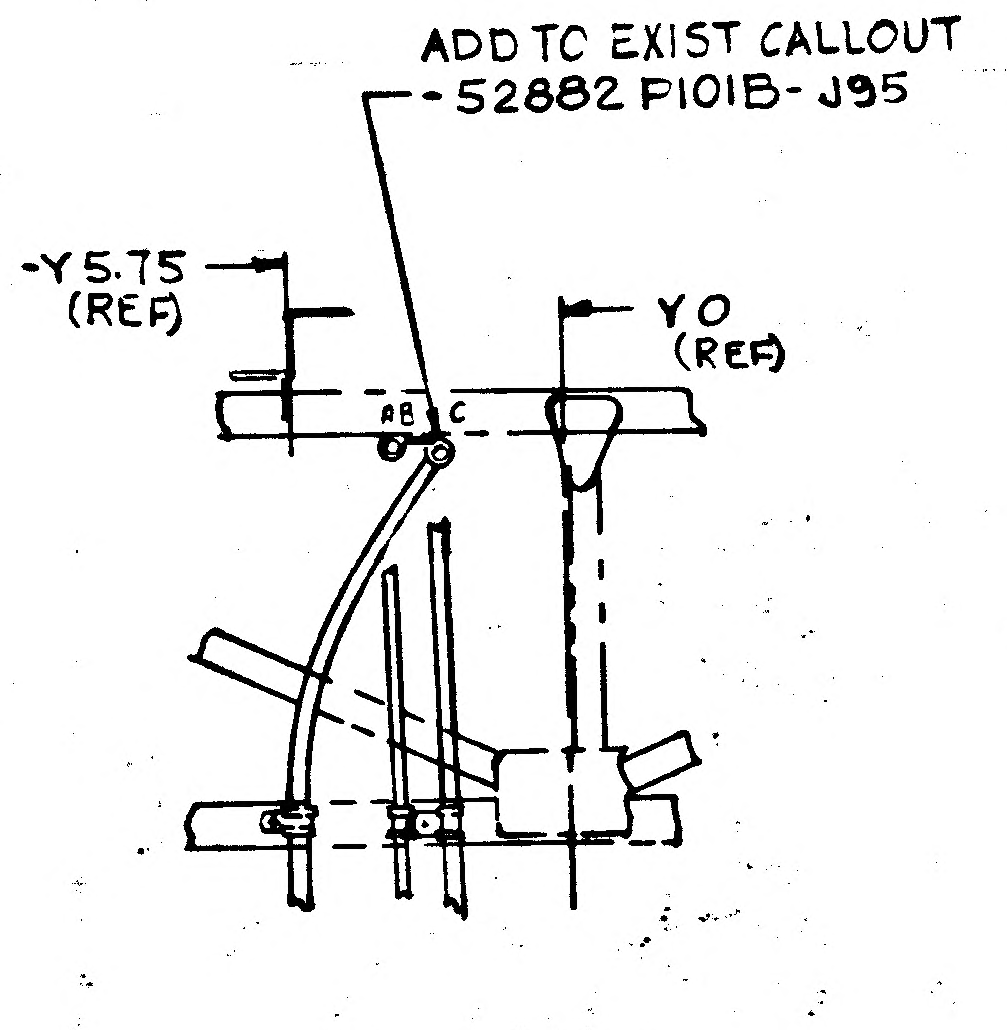
ADD TO EXIST CALLOUT
-52882 P101B-J95
-Y5.75 (REF)
Y0 (REF)
AB
C

SECT AJ-AJ
ZONE 47A SH 10 (REF)

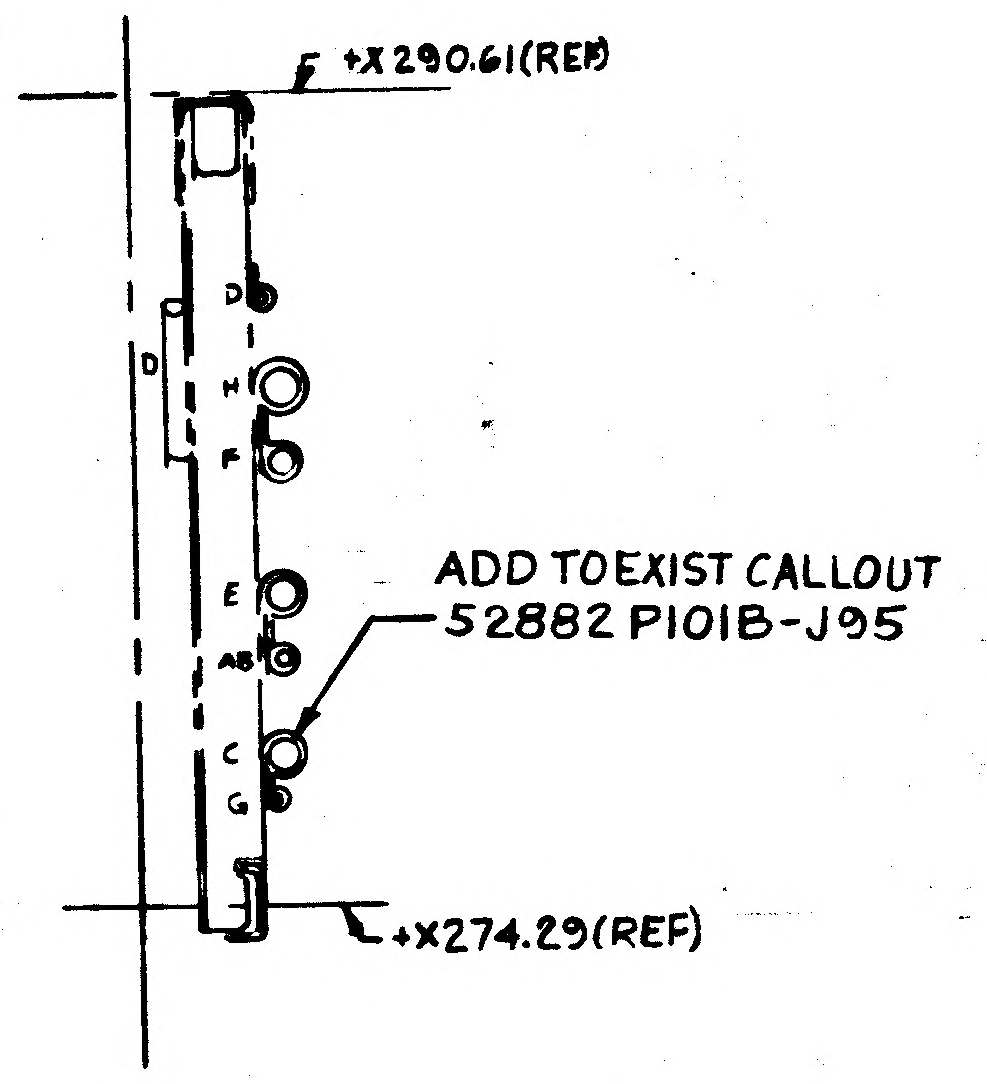
F
+X290.61 (REF)
D
H
E
AB
C
G
ADD TO EXIST CALLOUT
52882 P101B-J95
+X274.29 (REF)

SECT AF-AF
ZONE 47B SH 10 (REF)

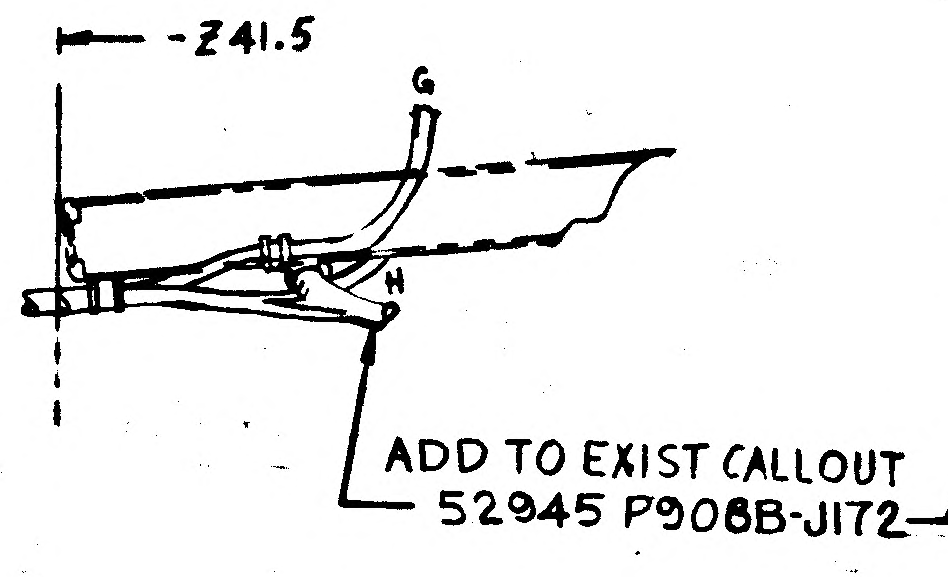
-Z41.5
G
H
ADD TO EXIST CALLOUT
52945 P908B-J172

VIEW AT-AT
ZONE 53A SH 11 (REF)

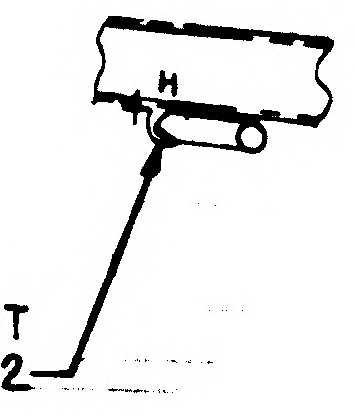

VIEW AS-AS
ZONE 54A SH 11 (REF)

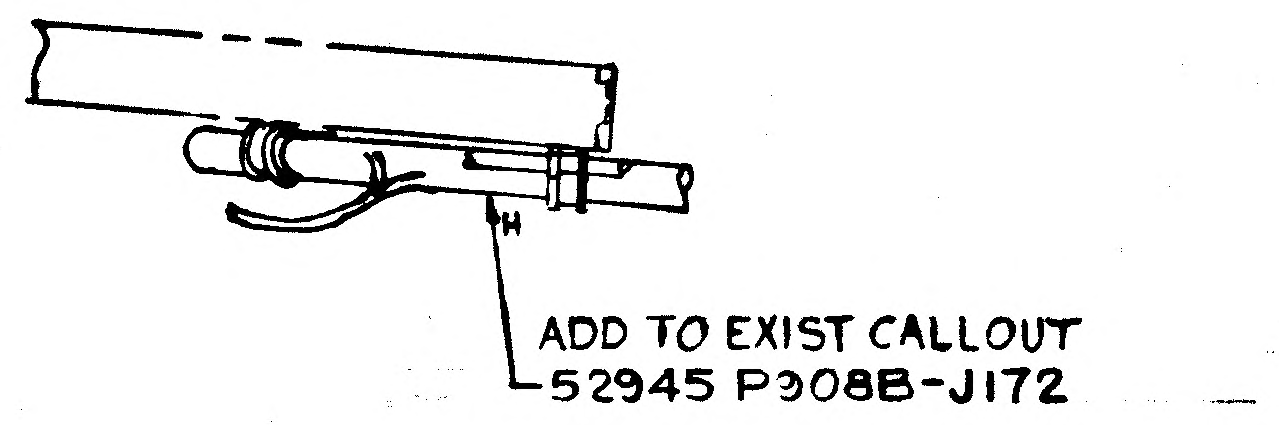
H
ADD TO EXIST CALLOUT
52945 P908B-J172

VIEW AR-AR
ZONE 55A SH 11

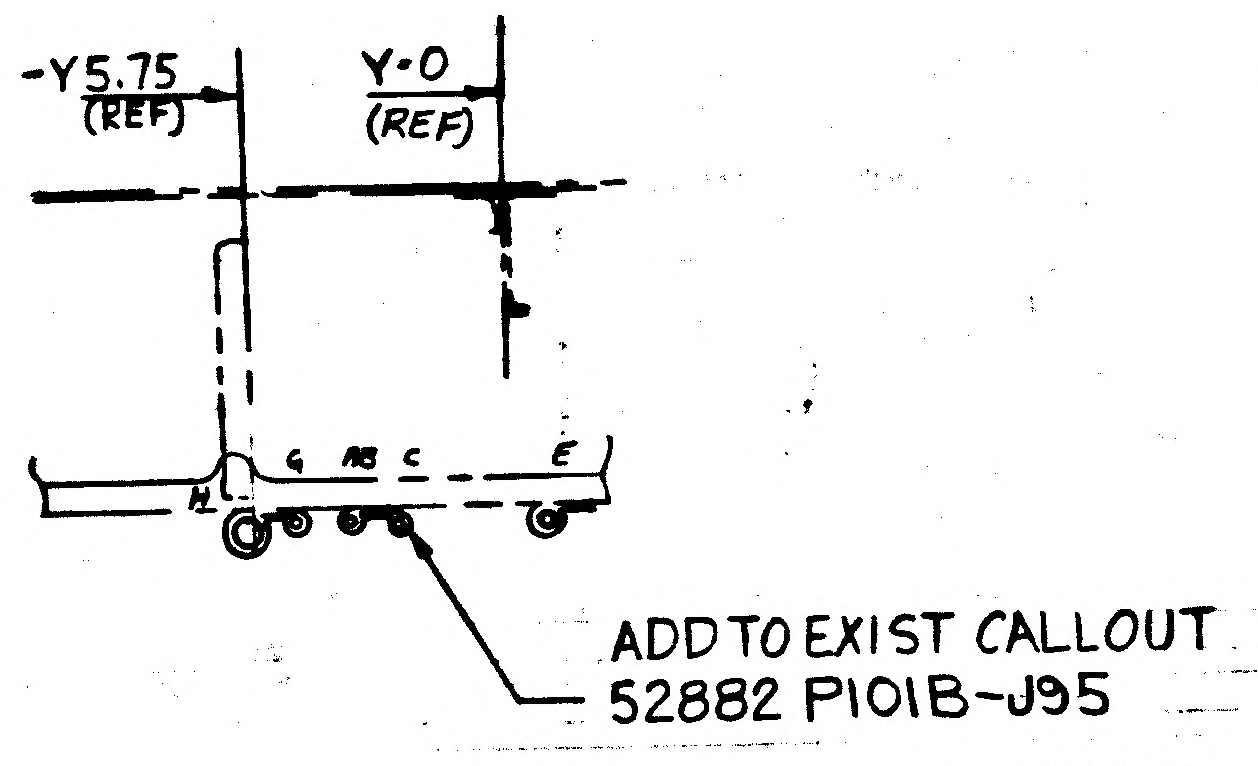
-Y5.75 (REF)
Y-0 (REF)
G
AB
C
E
ADD TO EXIST CALLOUT
52882 P101B-J95

VIEW AK-AK
ZONE 44A SH 10 (REF)

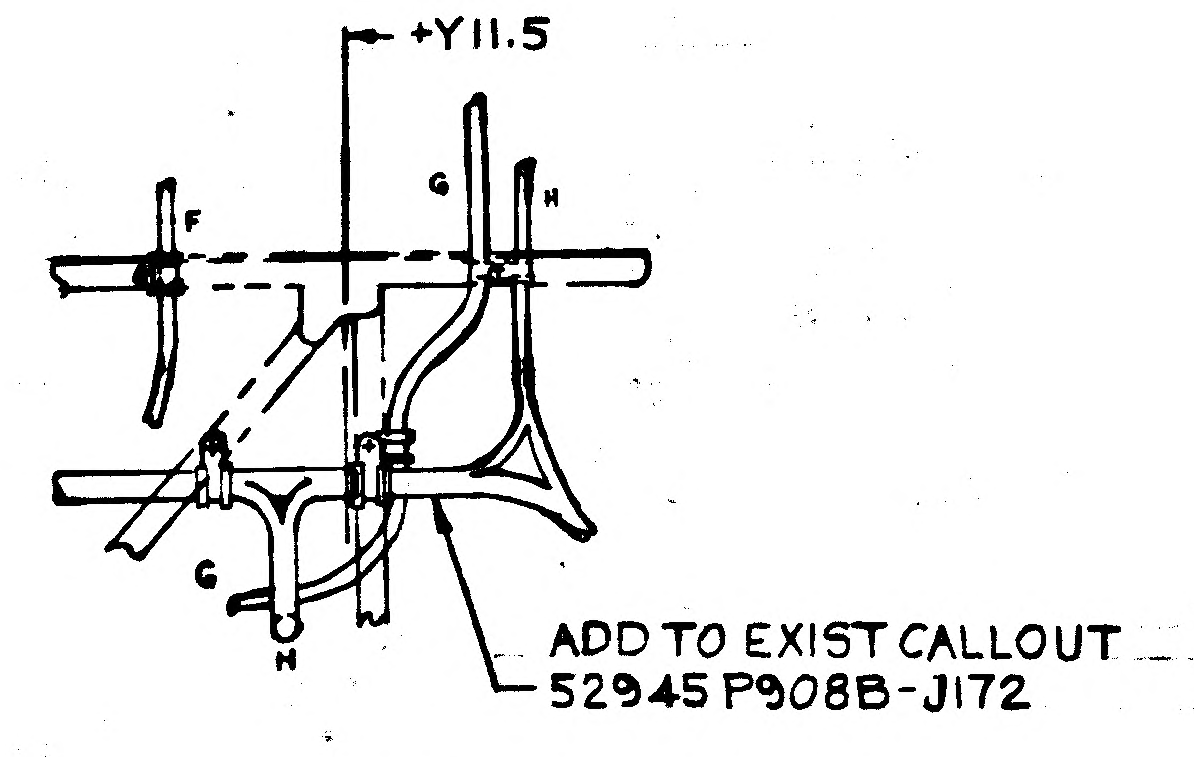
+Y11.5
F
G
H
H
ADD TO EXIST CALLOUT
52945 P908B-J172

VIEW AU-AU
ZONE 51A SH 11 (REF)

ALL

DETAIL SPEC REQD		CLASS II ENGRG CHG	

REASON FOR ED
CONVERSION FROM MANNED TO UN
CONFIGURATION

MODEL	EFFECTIVITY PROCURING ACT. NO.	GAEC UNIT NO.
LM		LM2(32)

7/25
ISSUED BY ROSADO SECTION EQUIP

ENG 28.3 REV 3-65

01/02 NAS 9-1100

FULL SIZE SH AREA 30.60 12 1/2 SQ FT
1/2 SIZE SH AREA 1/4 OF FULL 3 SQ FT

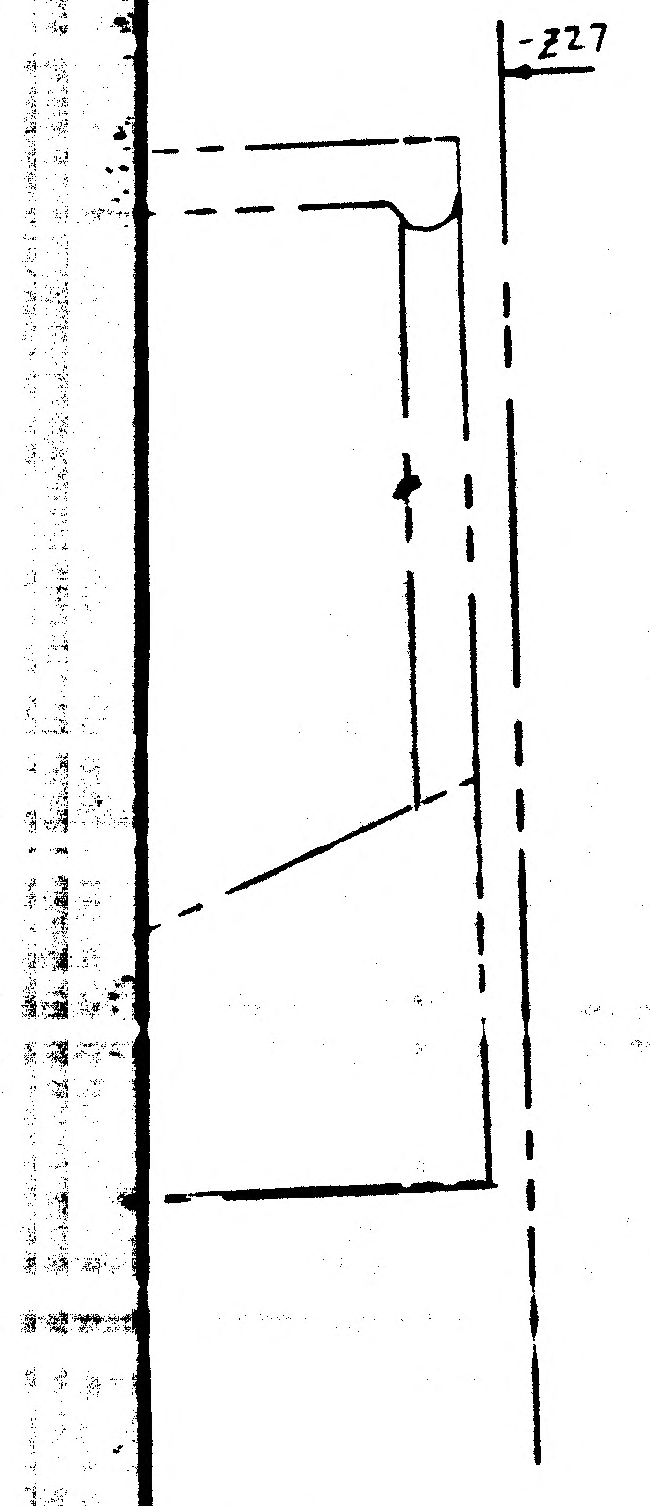

-AM
B SH 11 (REF)

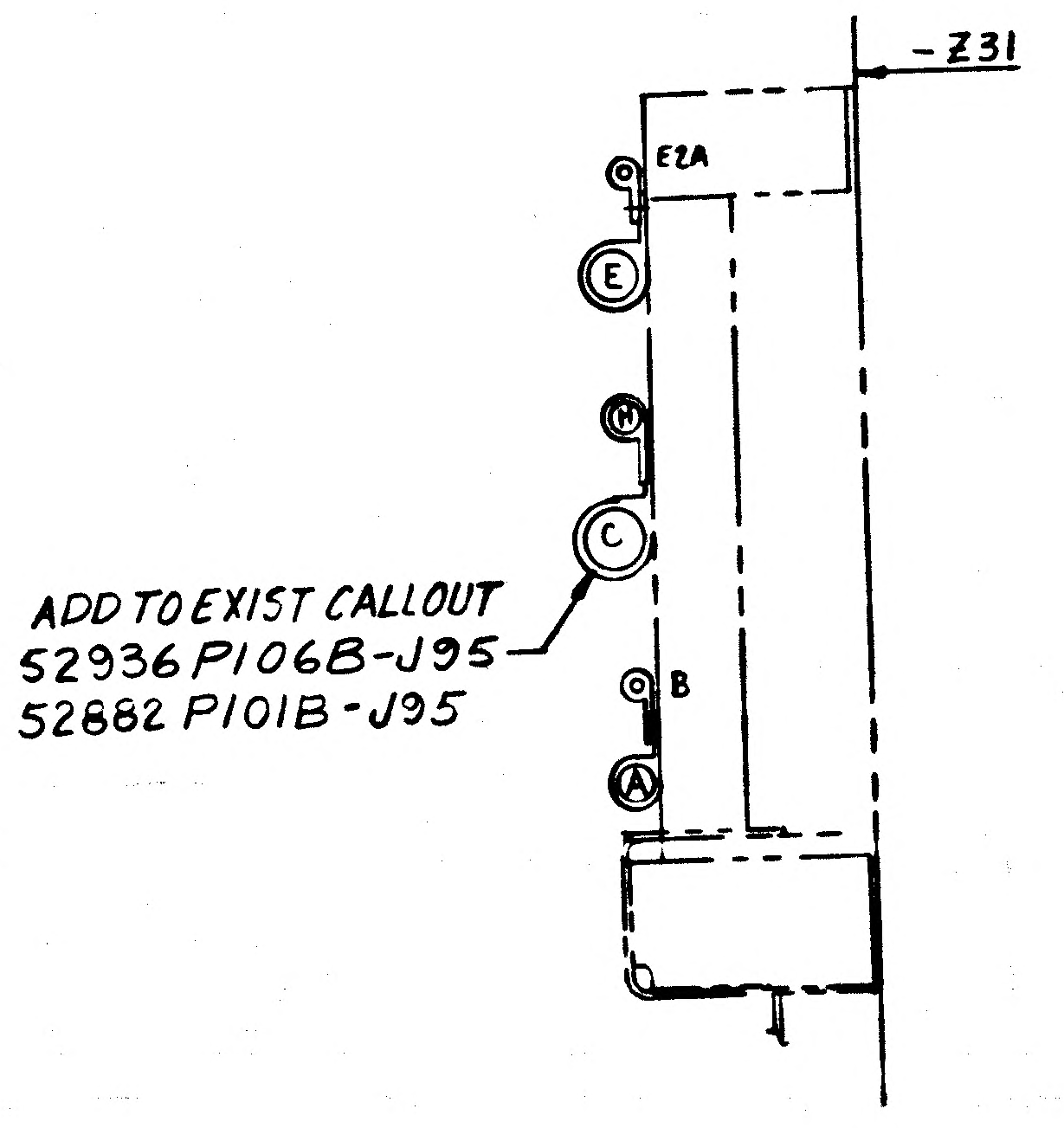
-Z31
E2A
E
C
B
A
ADD TO EXIST CALLOUT
52936 P106B-J95
52882 P101B-J95

VIEW AN-AN
ZONE 53B SH 11 (REF)

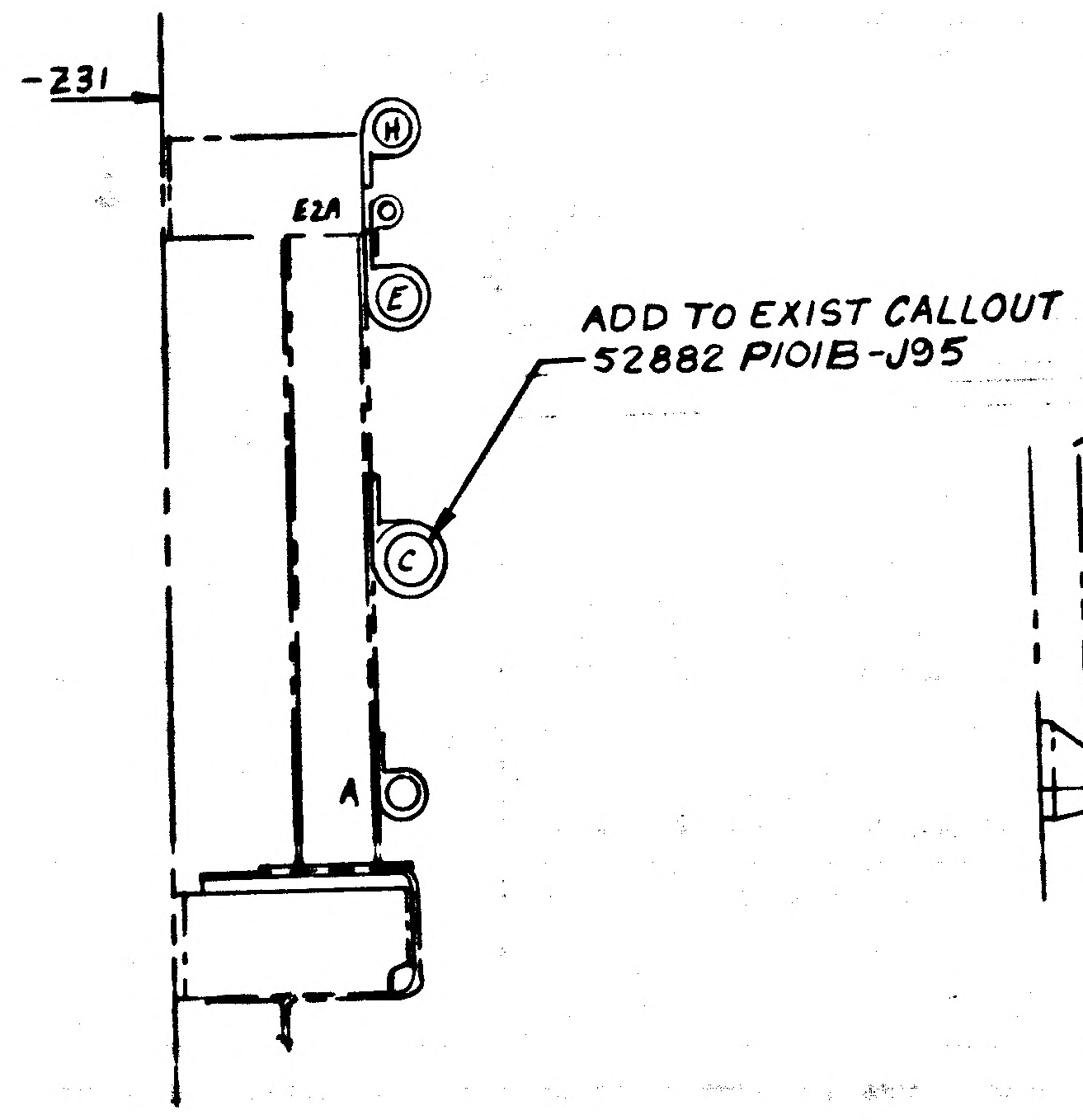
-Z31
H
E2A
E
C
A
ADD TO EXIST CALLOUT
52882 P101B-J95

VIEW AL-AL
ZONE 55B SH 11 (REF)

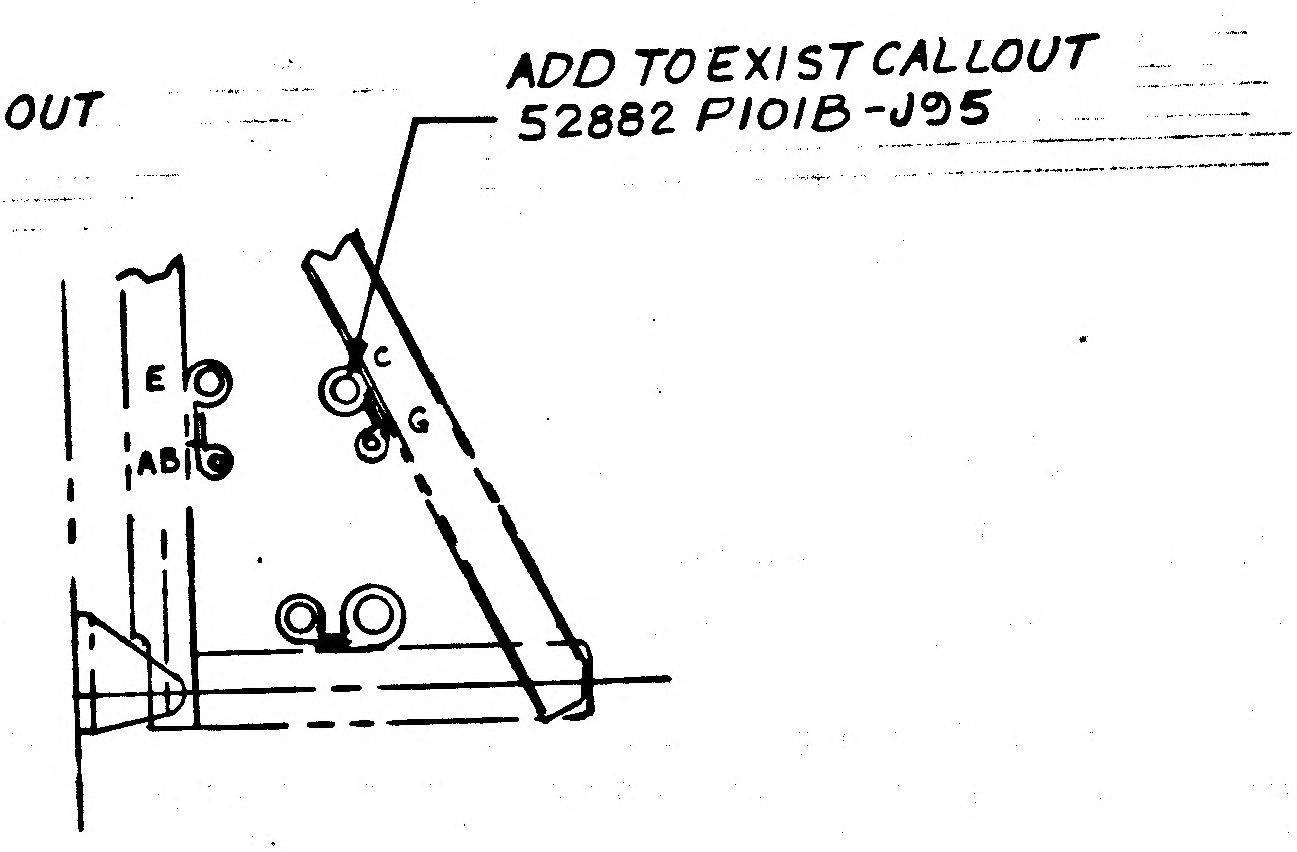
ADD TO EXIST CALLOUT
52882 P101B-J95
E
AB
C

VIEW AE-AE
ZONE 48B SH10 (REF)

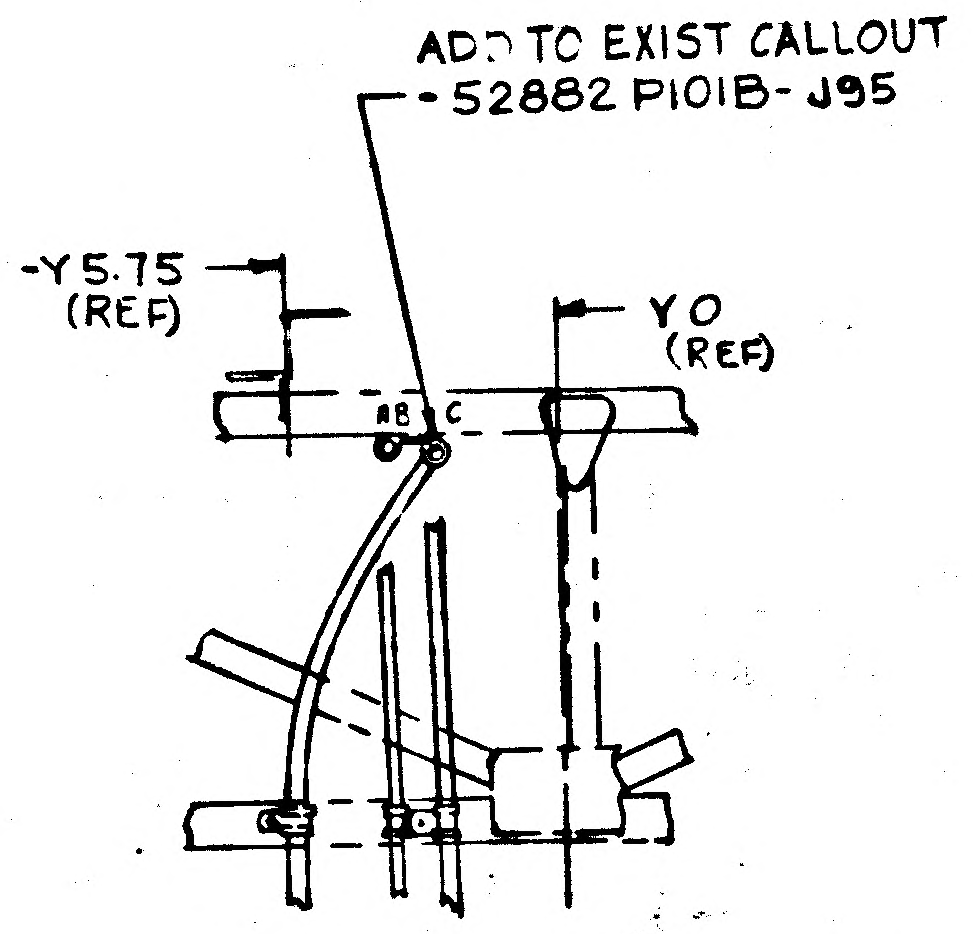
ADD TO EXIST CALLOUT
-52882 P101B-J95
-Y5.75 (REF)
Y0 (REF)

SECT AJ-AJ
ZONE 47A SH 10 (REF)

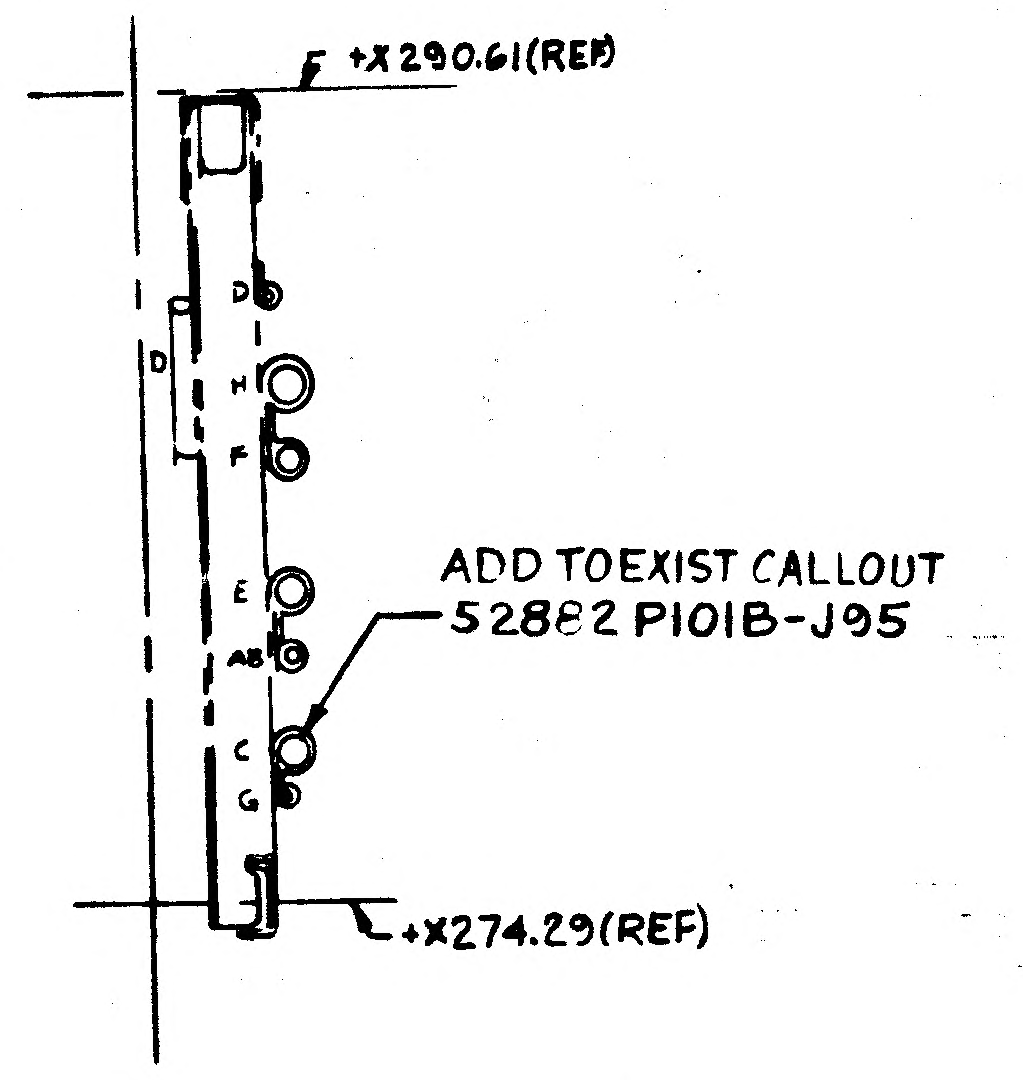
F +X290.61 (REF)
D
F
AB
C
ADD TO EXIST CALLOUT
-52882 P101B-J95
+X274.29 (REF)

SECT AF-AF
ZONE 47B SH 10 (REF)

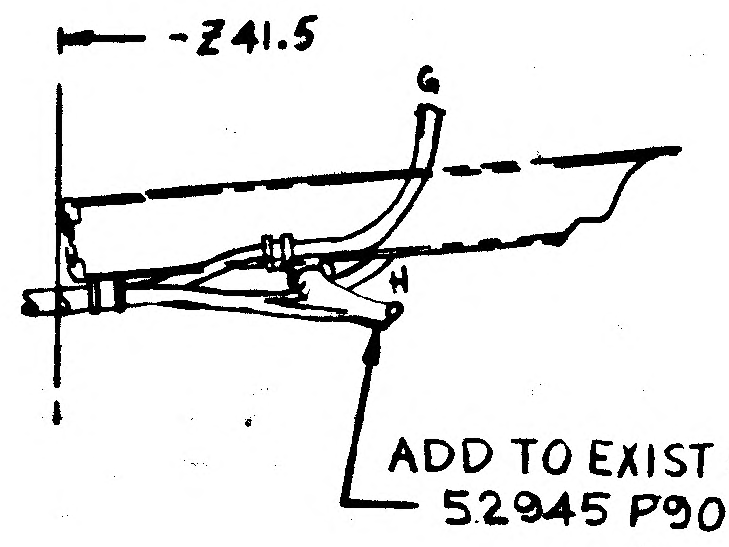
-Z41.5
G
H
ADD TO EXIST CALLOUT
52945 P908B-J172

VIEW AT-AT
ZONE 53A SH 11 (REF)

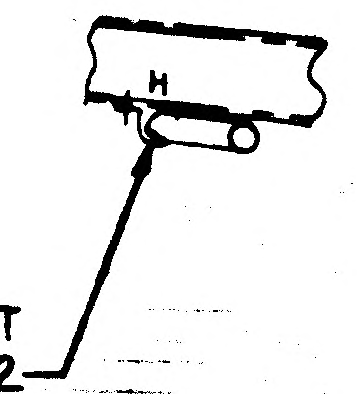

VIEW AS-AS
ZONE 54A SH 11 (REF)

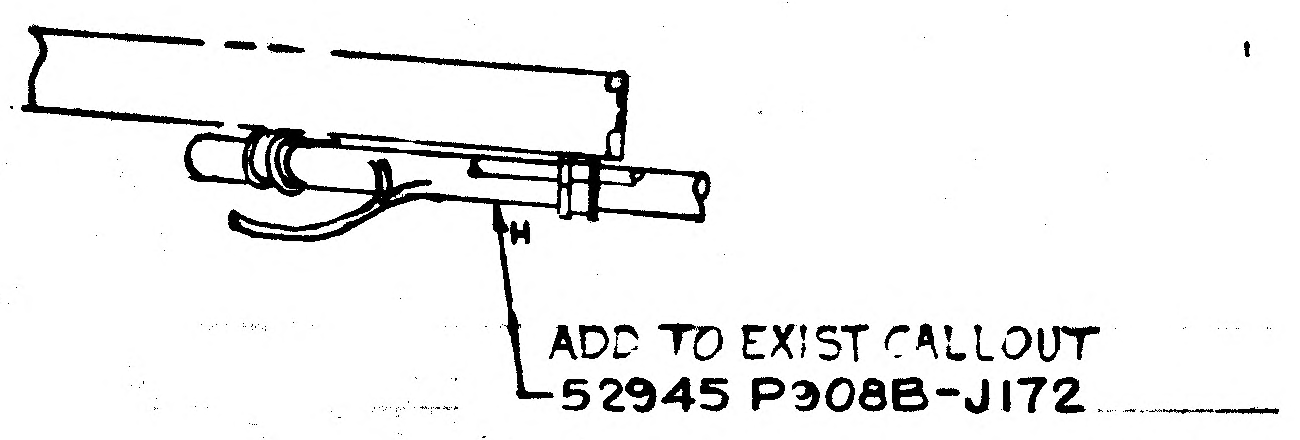
H
ADD TO EXIST CALLOUT
52945 P908B-J172

VIEW AR-AR
ZONE 55A SH 11

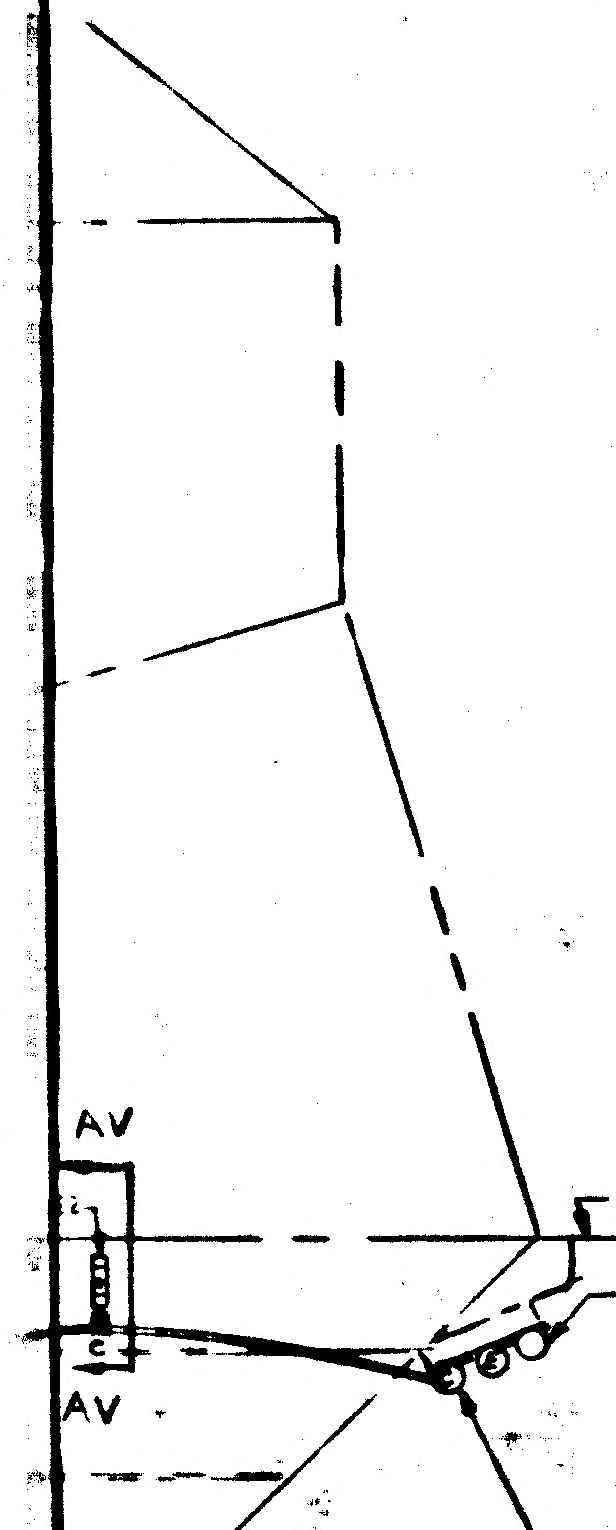
AV
AV
+X253.5 (REF)
EL
ADD TO EXIST CALLOUT
52936 P106B-J95
52882 P101B-J95
ADD TO EXIST CALLOUT
52945 P908B-J172

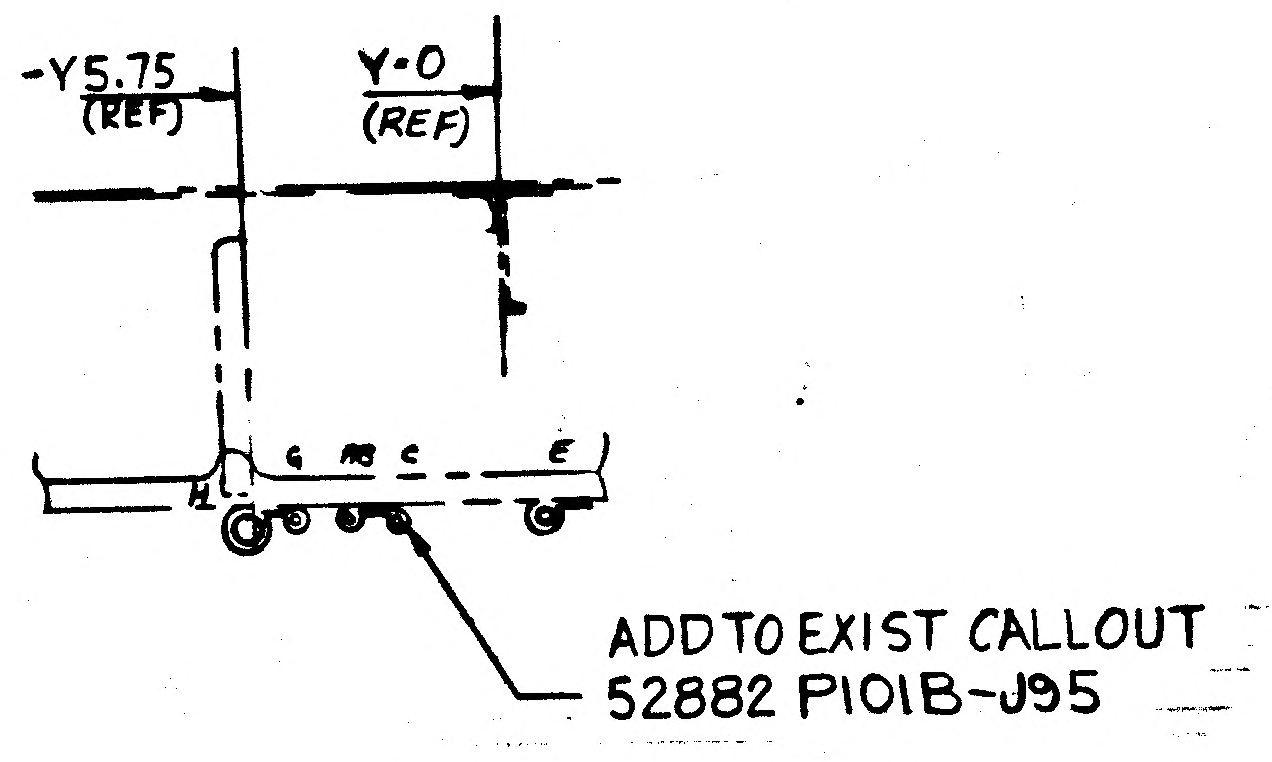
-Y5.75 (REF)
Y-0 (REF)
G
E
ADD TO EXIST CALLOUT
52882 P101B-J95

VIEW AK-AK
ZONE 44A SH10 (REF)

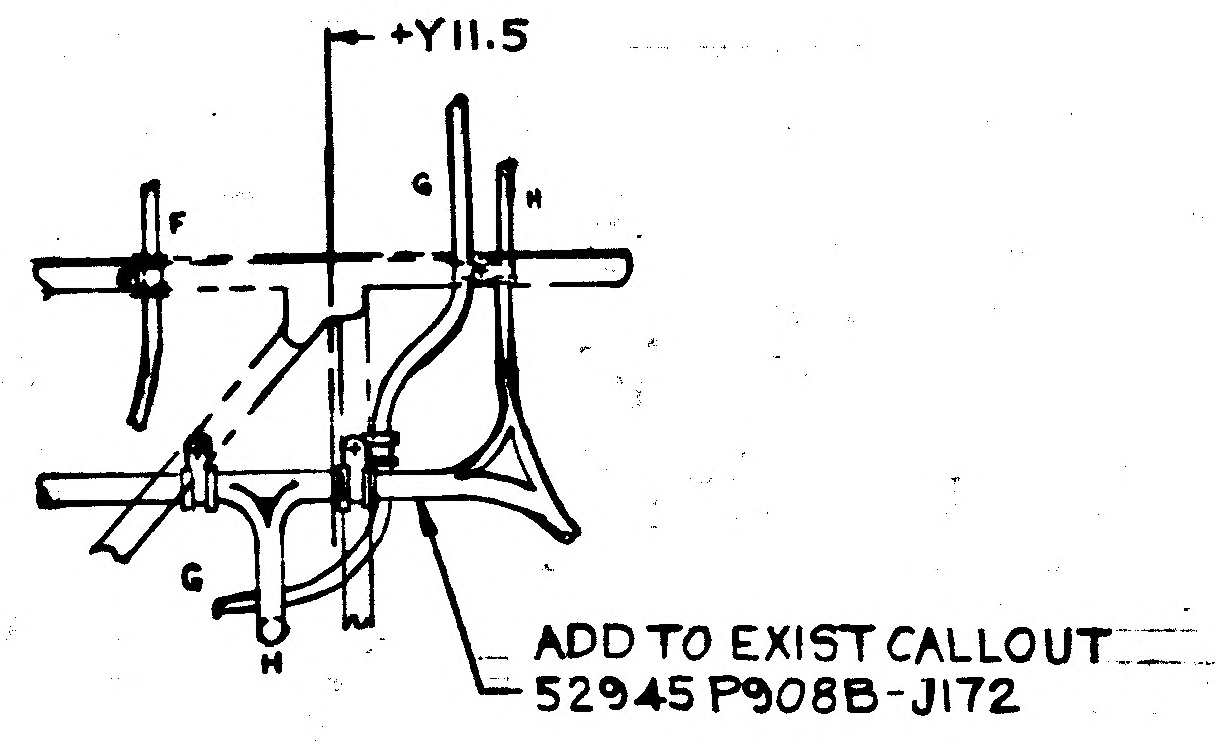
+Y11.5
F
G
H
G
H
ADD TO EXIST CALLOUT
52945 P908B-J172

VIEW AU-AU
ZONE 51A SH 11 (REF)

ALL DASH NUMBERS ARE PREFIX OF LDW390 DWGS AND ARE REF ONLY

DETAIL SPEC REQD		CLASS II ENGRG CHG		CLASS I ENGRG CHG	✓ LCD 1594	CONTROL INFO NO. LDW 280A-7860

REASON FOR EO: CONVERSION FROM MANNED TO UNMANNED CONFIGURATION

DESCRIPTION OF EO: ON-1 VIEW AV-AV, AN-AN, AM-AM ADDED 52936, P106B-J95, 52882 P101B-J95. VIEW AK-AK, AJ-AJ, AF-AF, AE-AE ADDED 52882 P101B-J95 VIEW AR-AR, AS-AS, AT-AT AU-AU ADDED 52945 P908B-J172. VIEW LKG FWD -Z27 ADDED 52936 P106B-J95, 52882 P101B-J95, 52945 P908B-J172

GRUMMAN C EO RELEASE: JK 7/25/67

MODEL	EFFECTIVITY PROCURING ACT. NO.	GAEC UNIT NO.	SUB CONTR UNIT NO.
LM		LM 2 (32)	

DRAWING REVISION REQD: REVISE DWG	RECORD EO	DISPOSITION OF PARTS: REWORK	SCRAP	BY / DATE	SUPPORT	RELIAB GROUP	GROUP LEADER	STRESS GROUP	LIAISON ENGRG	PROJ ENGR	GOVT
✓		✓		WRB 7/25 VD1			JW 7/25/67	CW BW 7/25/67		7/25	7/25/67

PRIORITY: C

DRAWING TITLE: LINES INSTALLATION ELECTRONIC ASCENT STAGE AEB

ENGINEERING ORDER
DRAWING NO. LDW280-52360
EO NO. C1

CODE IDENT NO. 26512

GRUMMAN AIRCRAFT ENGINEERING CORP
BETHPAGE, L. I., N. Y.

7/25
ISSUED BY ROSADO SECTION EQUIP LINES GROUP NO. 332 PL 25

ENG 32 3 REV 3-65

02/02

NAS 9-1100

ENG 32.1 REV 3-65

GRUMMAN AIRCRAFT ENGINEERING CORP.
CODE IDENT NO. 26512
ENGINEERING ORDER

DWG NO. LDW280-52360		EO NO. C3	
CONTROL INFO NO. LDW280A8280			

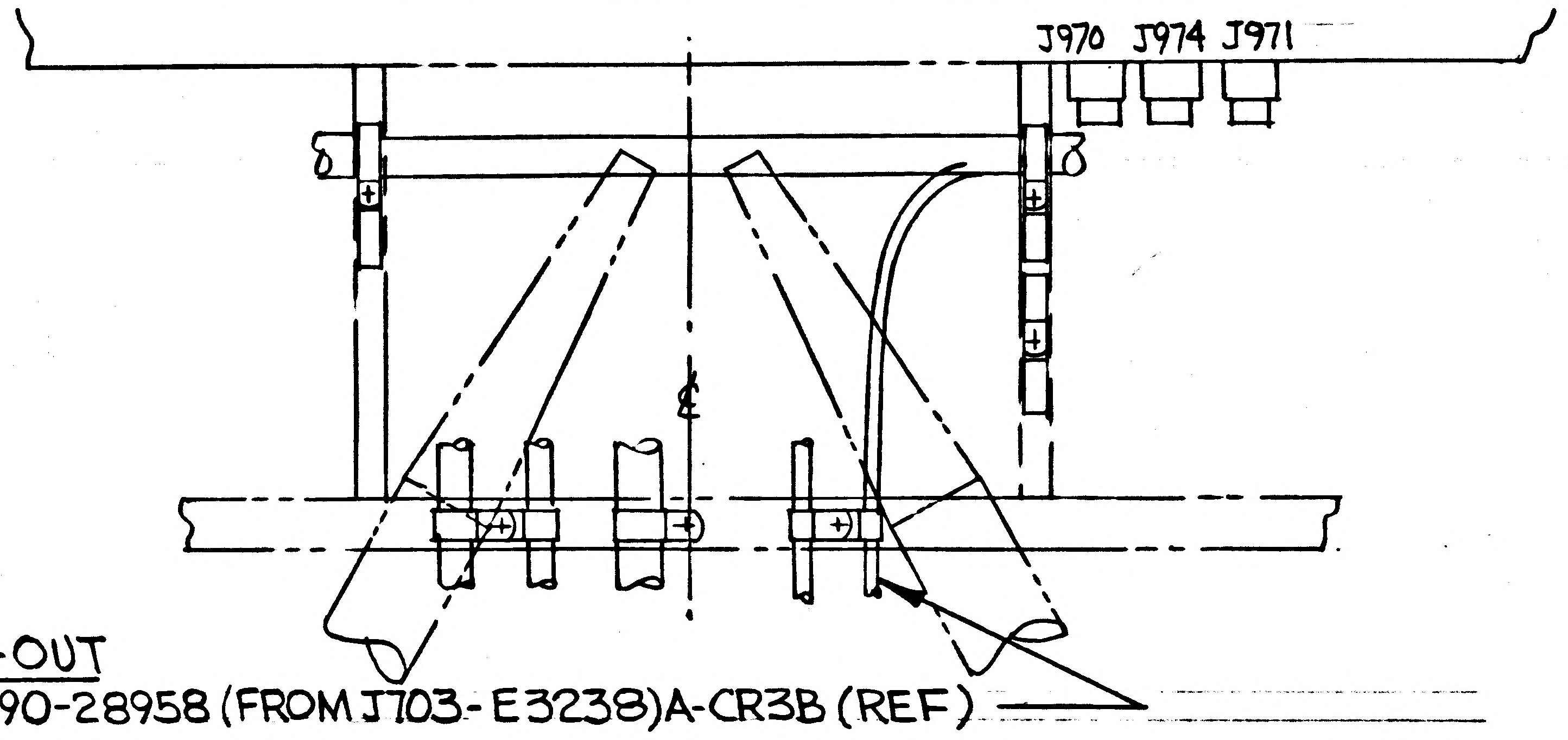

DELETE CALL-OUT
LDW390-28958 (FROM J703-E3238) A-CR3B (REF)

VIEW E-E AFT EQUIP BAY ECS LOOKING DOWN X 238.50
SH 5.00 (ZONES 11A & 12A)

THIS IS A REVISION OF EO B6

DETAIL SPEC REQ	☐	CL II ENGRG CHG	☑	CL I ENGRG CHG	☐	LCD 1306

REASON FOR EO: TO ADD REDUNDANT WIRING

REF EO B6
DESCRIPTION OF EO: DELETED LDW390-28958 (FROM J703-E3238) A-CR3B IN VIEW E-E

GAEC EO RELEASE: JK 8/1/7

MODEL	EFFECTIVITY: PROCURING ACTIVITY NO.	GAEC UNIT NO.	SUB CONTR UNIT NO.
LM		LM-2 (32)	

DRAWING CHANGE REQD		DISPOSITION OF PARTS	
✓		✓	
REVISE DWG	RECORD EO	REWORK	SCRAP

APPROVED BY	Jap				JN			
DATE	7/27/67			7-28-67	7/31		7/31/67	8-1-67
	VDI	SUPPORT	RELIAB GROUP	GROUP LEADER	STRESS GROUP	LIAISON ENGRG	PROJ ENGRG	GOVT

PRIORITY	DRAWING TITLE	DRAWING NO.	EO NO.
C	LINES INSTALLATION ELECT ASCENT STAGE - AFT BAY	LDW280-52360	C3

ISSUED BY D.CAROLEO EX 1153 SECTION EQUIP. LINES /VDI GROUP NO. 332 PL 25

01

NAS 9-1100

01

NAS 9-1100

ENG 32.2 REV 3-65

GRUMMAN AIRCRAFT ENGINEERING CORP.
CODE IDENT NO. 26512
ENGINEERING ORDER

DWG. NO. LDW280-52360		EO NO.	C4
CONTROL INFO NO. LDW280A8281			

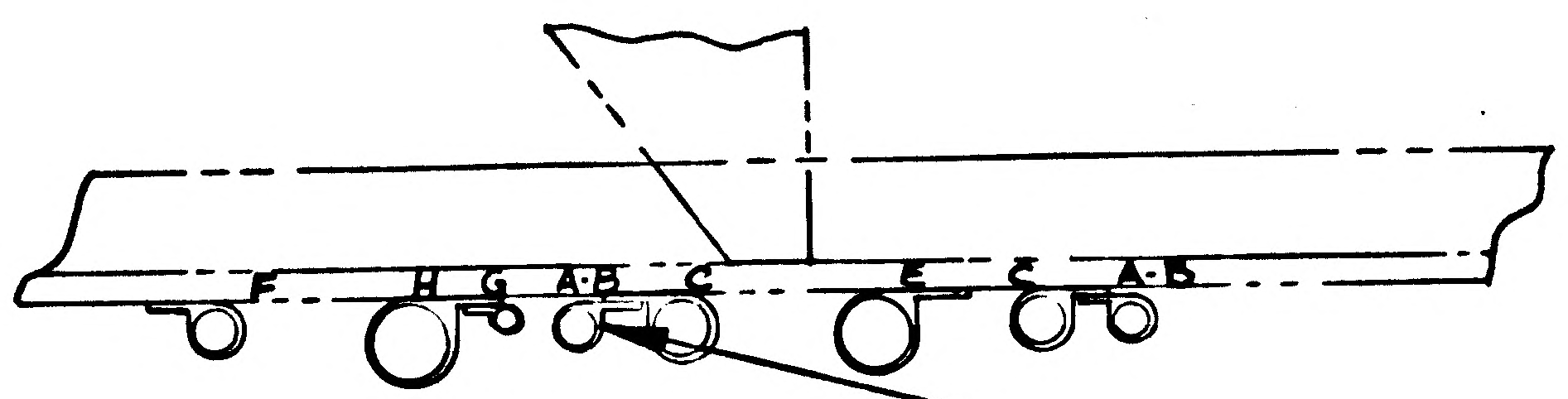

DELETE CALL-OUT
A-CR3B (E3238-J703) LDW390-28958 (REF)
SH 11.00 (ZONE 51C & 52B)

VIEW AP-AP (ZONE 38A)
LKG DN AT X241.0

DELETE CALL-OUT
LDW390-28958 (J703-E3238) A-CR3B (REF)

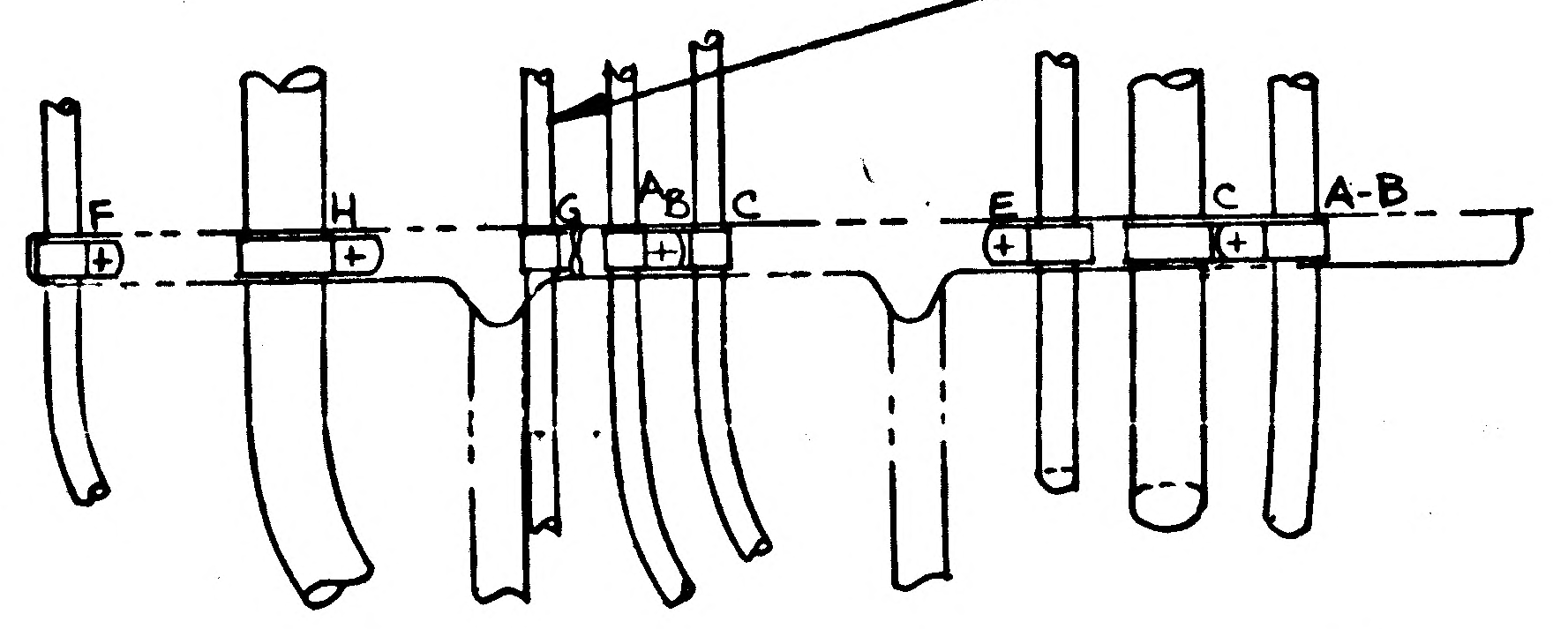

VIEW AU-AU (ZONE 38A)
LKG UP X 228.0
SH 11.00 (ZONE 51A & 52A)

THIS IS A REVISION OF EO B7

DETAIL SPEC REQ		CL II ENGRG CHG	✓	CL I ENGRG CHG		LCD 1306

REASON FOR EO	DESCRIPTION OF EO	GAEC EO RELEASE
TO ADD REDUNDANT WIRING	REF EO B7 DELETED CALL-OUT A-CR3B (E3238-J703) LDW390-28958 IN VIEW AP-AP AND LDW390-28958 (J703-E3238) A-CR3B IN VIEW AU-AU	JK 8/1/7

MODEL	EFFECTIVITY: PROCURING ACTIVITY NO.	GAEC UNIT NO.	SUB CONTR UNIT NO.
LM		LM-2(32)	

DRAWING CHANGE REQD: REVISE DWG	RECORD EO	DISPOSITION OF PARTS: REWORK	SCRAP
✓		✓	

	VDI	SUPPORT	RELIAB. GROUP	GROUP LEADER	STRESS GROUP	LIAISON ENGRG	PROJ ENGRG	GOVT
APPROVED BY	Jap			JW	JV			
DATE	7/28/67			7-28-67	7/31		7/31/67	8-1-67

PRIORITY	DRAWING TITLE	DRAWING NO.	EO NO.
C	LINES INSTALLATION ELECTRONIC ASCENT STAGE ~ AFT EQUIP BAY	LDW280-52360	C4

7/31/67
ISSUED BY DAN CAROLEO EX 1153 SECTION EQUIP. LINES /VDI GROUP NO. 332 PL 25

01 NAS 9-1100

GMG 28.2 REV 3-68 ꞵ

GRUMMAN AIRCRAFT ENGINEERING CORP.

CODE IDENT NO. 26512 *

ENGINEERING ORDER

DWG. NO. LDW280-52360 EO NO. C6

CONTROL INFO NO. LM5-15856

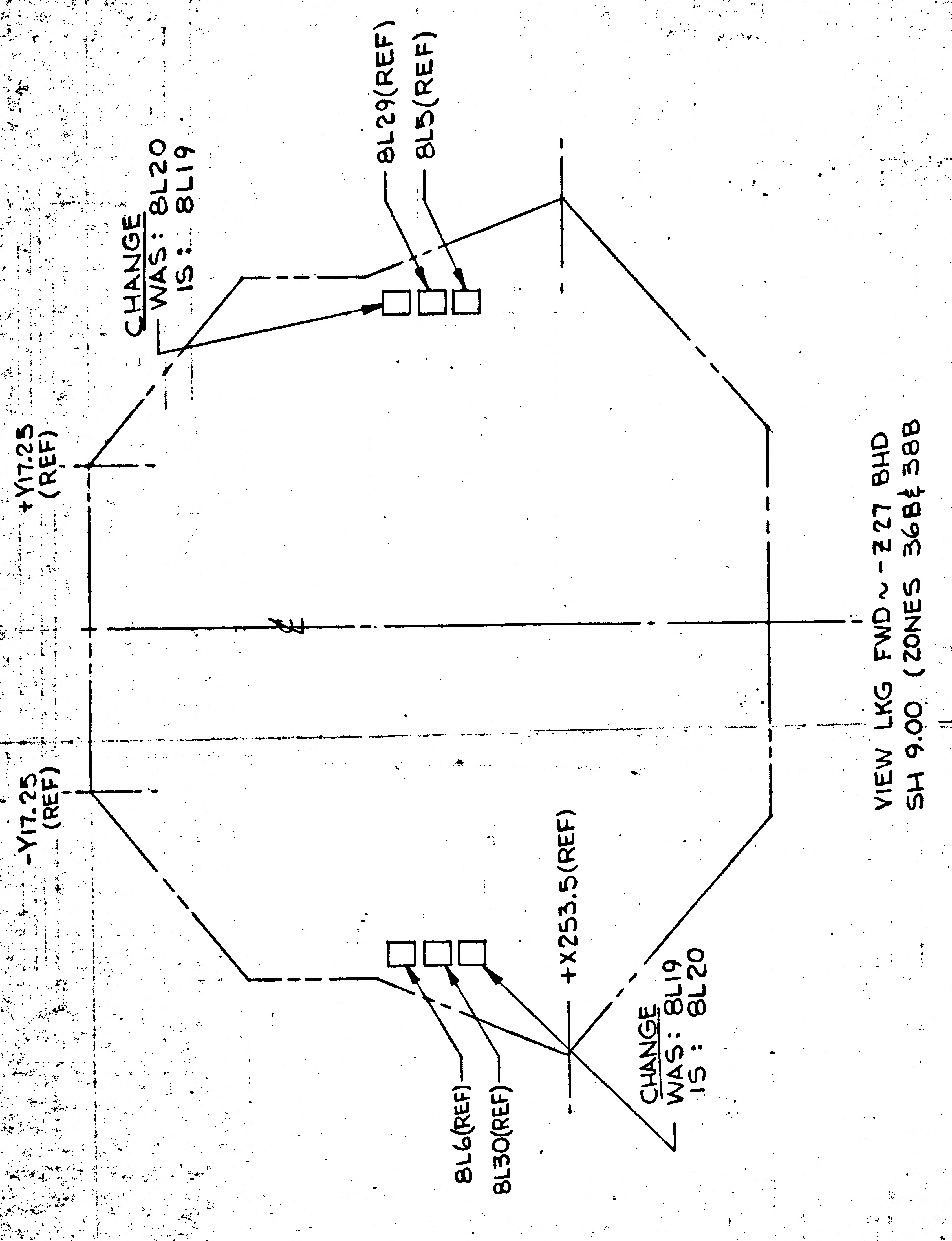
8L29(REF)
8L5(REF)
CHANGE
WAS: 8L20
IS: 8L19
+Y17.25 (REF)
-Y17.25 (REF)
+X253.5(REF)
CHANGE
WAS: 8L19
IS: 8L20
8L6(REF)
8L30(REF)
VIEW LKG FWD ~ Z27 BHD
SH 9.00 (ZONES 36B & 38B

RELEASED BY LIAISON

DETAIL SPEC REQ		CL II ENGRG CHG	✓	CL I ENGRG CHG

REASON FOR EO: TO CORRECT IDENTIFICATION OF VALVES

DESCRIPTION OF EO: ON-1 CHANGED INTERCONNECT VALVES, DESIGNATION +Y8L19 WAS 8L20, -Y8L20 WAS 8L19

GAECW EO RELEASE: JK 5

MODEL	PROCURING ACTIVITY NO.	GAEC UNIT NO.	SUB CONTR UNIT NO.
LM		LM-2(32)	

DRAWING CHANGE REQD: REVISE DWG	RECORD EO	DISPOSITION OF PARTS: REWORK	SCRAP
✓		✓	

	VDI	SUPPORT	RELIAB. GROUP	GROUP LEADER	STRESS GROUP	LIAISON ENGRG	PROJ ENGRG
APPROVED BY	JAP			—	DV	DV	WCB
DATE	8/14/67			—	8/5/67	8/5/67	8/14/67

~~CUST~~ 8/7/67

PRIORITY	DRAWING TITLE	DRAWING NO.	EO NO.
C	LINES INSTALLATION ~ ELECTRON ASCENT STAGE ~ AFT EQUIP. BAY	LDW280-52360	C6

ISSUED BY DAN CAROLEO EX:1153 SECTION EQUIP. LINES/VDI GROUP NO. 332 PL 25

ENG 32.2 REV 3-65

B

GRUMMAN AIRCRAFT ENGINEERING CORP.
CODE IDENT NO. 26512
ENGINEERING ORDER *

DWG. NO. LDW280-52360 EO NO. C7
CONTROL INFO NO. LDW280A8593

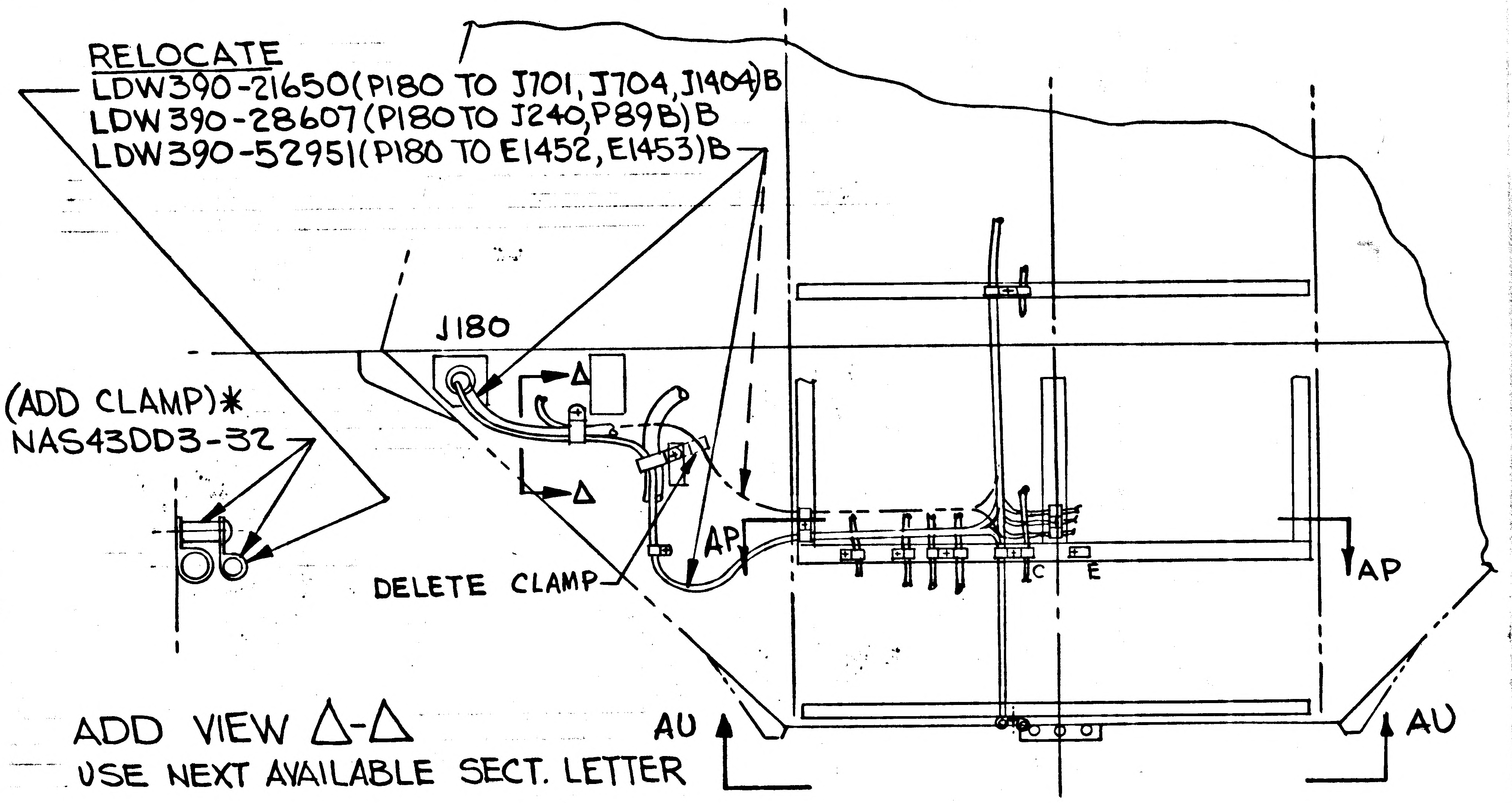
RELOCATE
LDW390-21650(P180 TO J701, J704, J1404)B
LDW390-28607(P180 TO J240, P89B)B
LDW390-52951(P180 TO E1452, E1453)B
J180
(ADD CLAMP)*
NAS43DD3-32
DELETE CLAMP
Δ
Δ
AP
AP
C
E
AU
AU
℄

ADD VIEW Δ-Δ
USE NEXT AVAILABLE SECT. LETTER

LDW280-52360-1 INSTL
-Z27.0 BULKHEAD
VIEW LOOKING FWD
SHEET 9.00 (ZONE 39A)

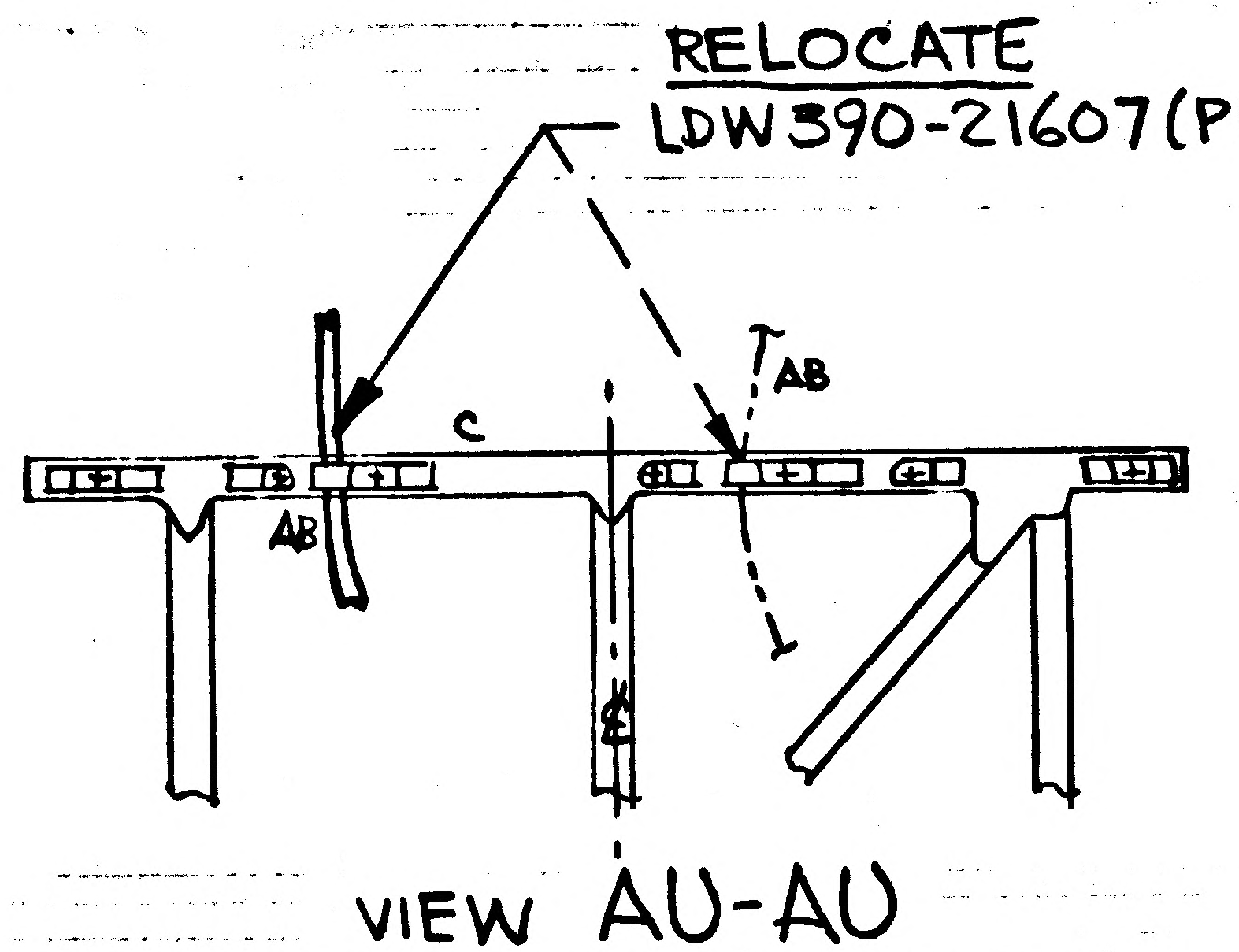
RELOCATE
LDW390-21607(P180-J240B)B
AB
AB
C
℄

VIEW AU-AU
SHEET 11.00 (ZONE 51A)

* ADD GC500AA CLAMP PER LPC 280-23

THIS EO IS A REVISION OF EO C5

B

DETAIL SPEC REQ ☐ CL II ENGRG CHG ☑ CL I ENGRG CHG ☐ LCD 1752

REASON FOR EO: REROUTED CABLES TO PROVIDE FOR REDUNDANT WIRE ROUTE

DESCRIPTION OF EO: REROUTED CABLE ASSEMBLIES IN VIEW -Z27.00 BHD LKG FWD, VIEW AU-AU & Δ-Δ

Ⓑ GAECW EO RELEASE C 5
JK 8/14/7

MODEL	PROCURING ACTIVITY NO.	GAEC UNIT NO.	SUB CONTR UNIT NO.
LM		LM-2(32)	

DRAWING CHANGE REQD: REVISE DWG ✓ RECORD EO
DISPOSITION OF PARTS: REWORK ✓ SCRAP

APPROVED BY				jw	cw			
DATE	8/11/67			8/11/67	8/14/67		8/14/67	8-14-67
	VDI	SUPPORT	RELIAB. GROUP	GROUP LEADER	STRESS GROUP	LIAISON ENGRG	PROJ ENGRG	~~GOVT~~

PRIORITY: C
DRAWING TITLE: LINES INSTALLATION ELECTRONICS ASCENT STAGE ~ AFT EQUIP BAY
DRAWING NO. LDW280-52360
EO NO. C7

8/14
ISSUED BY DAN CAROLEO EX1153 SECTION EQUIP. LINES / VDI GROUP NO. 332 PL 25

01
NAS 9-1100

ENG 32.1 REV 3-65

B

GRUMMAN AIRCRAFT ENGINEERING CORP.
CODE IDENT NO. 26512
ENGINEERING ORDER *

DWG. NO. LDW280-52360 | EO NO. C8
CONTROL INFO NO. LDW280A8407

ON-1 INSTL IN F/D

SH 6.00 ZONE 20-C REMOVE CALLOUTS: GN511L-0420(2) TYP(2) PLACES (SEE NOTE 14) MS21043-4(3) TYP(2) PLACES (SEE NOTE 15)

SH 10.00 ZONE 47-B REMOVE CALLOUT: SEE DETAIL BD $\boxed{46/A}$
ZONE 46-A DELETE DETAIL BD

ON-1 INSTL IN B/M
SH 2.00 DELETE AN960D416L(4), AN4-5A(2)
SH 2.01 DELETE GN511L-0420(4), MS21042L4(2), MS21043-4(6)
SH 3.00 DELETE NOTES 14 & 15
SH 3.01 DELETE NOTE 17

DETAIL SPEC REQ ☐ CL II ENGRG CHG ☑ CL I ENGRG CHG ☐ LCD 1819 5

REASON FOR EO: TRANSFER OF INFO FROM EQUIP LINES DWGS TO EPS DWGS.

DESCRIPTION OF EO: ON-1 INSTL IN F/D DELETED GN511L-0420(2) MS21043-4(3), TYP(2) PLACES SEE NOTES 14 & 15, DETAIL BD; ON-1 INSTL IN B/M DELETED AN960D416L(4), AN4-5A(2), GN511L-0420(4) MS21042L4(2), MS21043-4(6), NOTES 14, 15 & 17

Ⓡ GAEC EO RELEASE JK 8/31/7

MODEL	PROCURING ACTIVITY NO.	GAEC UNIT NO.	SUB CONTR UNIT NO.
LM		LM-2(32)	

DRAWING CHANGE REQD: REVISE DWG ✓ RECORD EO
DISPOSITION OF PARTS: REWORK ✓ SCRAP

	VDI	SUPPORT	RELIAB. GROUP	GROUP LEADER	STRESS GROUP	LIAISON ENGRG	PROJ ENGRG	~~GOVT~~
APPROVED BY					JAB			
DATE	8/28/67			8/29/67	8/30/67		8/30/67	8-30-67

PRIORITY C
DRAWING TITLE: INSTL ELECTRONIC LINES ASCENT STAGE AFT EQUIP BAY
DRAWING NO. LDW280-52360
EO NO. C8

8-31-67
ISSUED BY J. DeVITA X1153 (8-25-67) SECTION EQUIP LINES (VDI) GROUP NO. 332 PL 25

01

NAS 9-1100

ENG 32.2 REV 3-65

GRUMMAN AIRCRAFT ENGINEERING CORP.
CODE IDENT NO. 26512
ENGINEERING ORDER

DWG. NO. LDW280-52360		EO NO. C9
CONTROL INFO NO. LM5-13622		

ON-1 IN F/D & BM

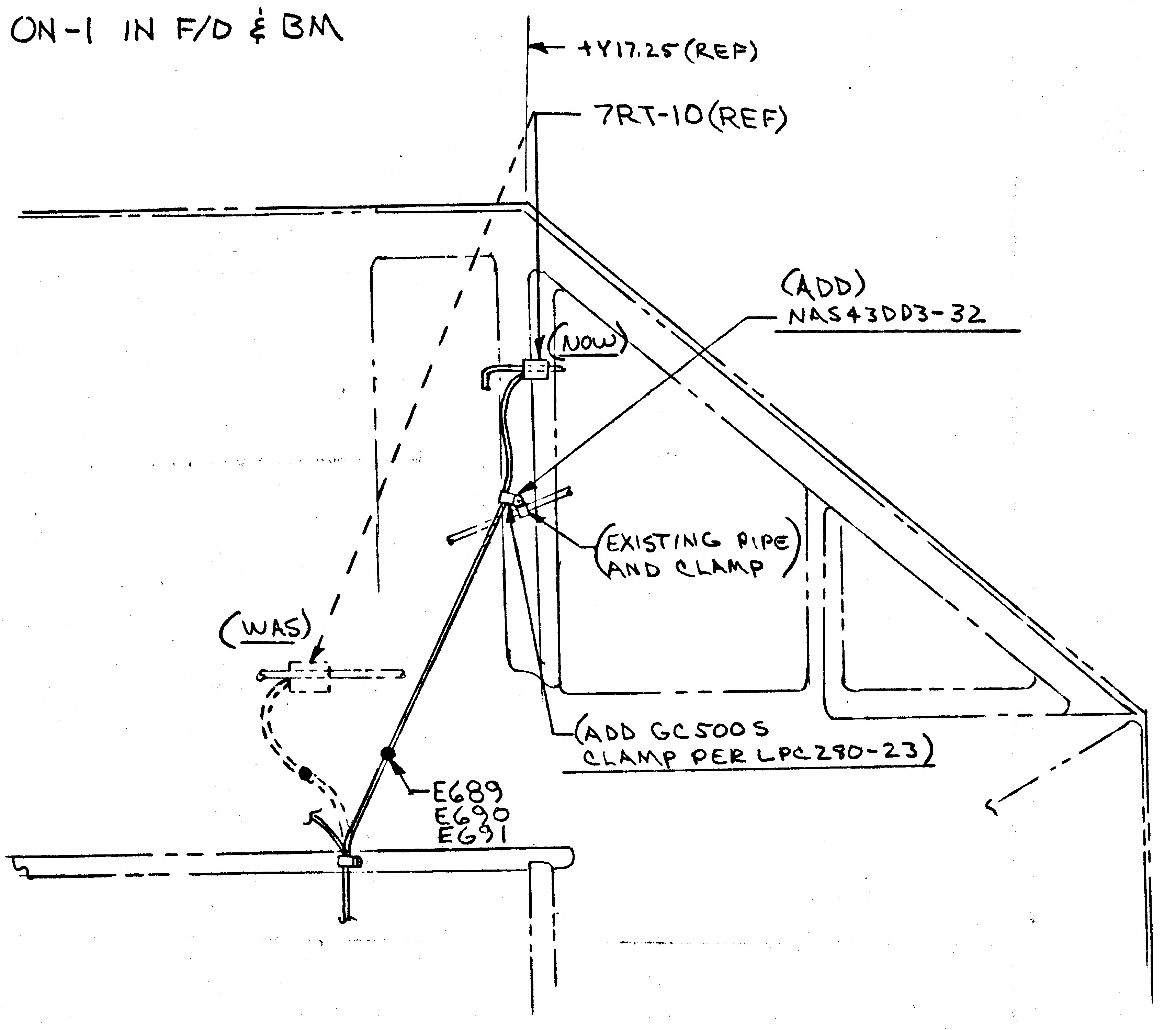
+Y17.25 (REF)
7RT-10 (REF)
(ADD) NAS43DD3-32
(NOW)
(EXISTING PIPE AND CLAMP)
(WAS)
(ADD GC500S CLAMP PER LPC280-23)
E689
E690
E691

VIEW LKG FWD - Z27.0 BHD
(SH9 ZONE 38A)

RELEASED BY LIAISON

DETAIL SPEC REQ		CL II ENGRG CHG	✓	CL I ENGRG CHG	

REASON FOR EO: TO ADD ADDITIONAL SUPPORT FOR RELOCATED XDUCER WIRE	DESCRIPTION OF EO: ON-1 IN F/D & BM ADDED NAS43DD3-32 & GC500S CLAMP, REVISED PICTURE.

MODEL	PROCURING ACTIVITY NO.	GAEC UNIT NO.	SUB CONTR UNIT NO.
LM		LM 2 (32)	

DRAWING CHANGE REQD: REVISE DWG	RECORD EO	DISPOSITION OF PARTS: REWORK	SCRAP
✓		✓	

	APPROVED BY	DATE
VDI	VDI	9/18/67
SUPPORT		
RELIAB. GROUP		
GROUP LEADER	—	—
STRESS GROUP	HJ	9-1-67
LIAISON ENGRG	CH	9-1-67
PROJ ENGRG	MPB	9/18/67
GOVT		9-5-67
GAEC EO RELEASE	JK	

PRIORITY	DRAWING TITLE	DRAWING NO.	EO NO.
C	LINE INSTL ELECTRONIC ASCENT STAGE AFT EQUIP BAY	LDW280-52360	C9

ISSUED BY J FARRELL X86454 SECTION EQUIP LINES GROUP NO. 332 PL 5

01
NAS 9-1100

01 NAS 9-1100

B

ENG 32.2 REV 3-65

GRUMMAN AIRCRAFT ENGINEERING CORP.
CODE IDENT NO. 26512
ENGINEERING ORDER

*

DWG. NO. LDW280-52360
EO NO. C10
CONTROL INFO NO. LDW280A9002

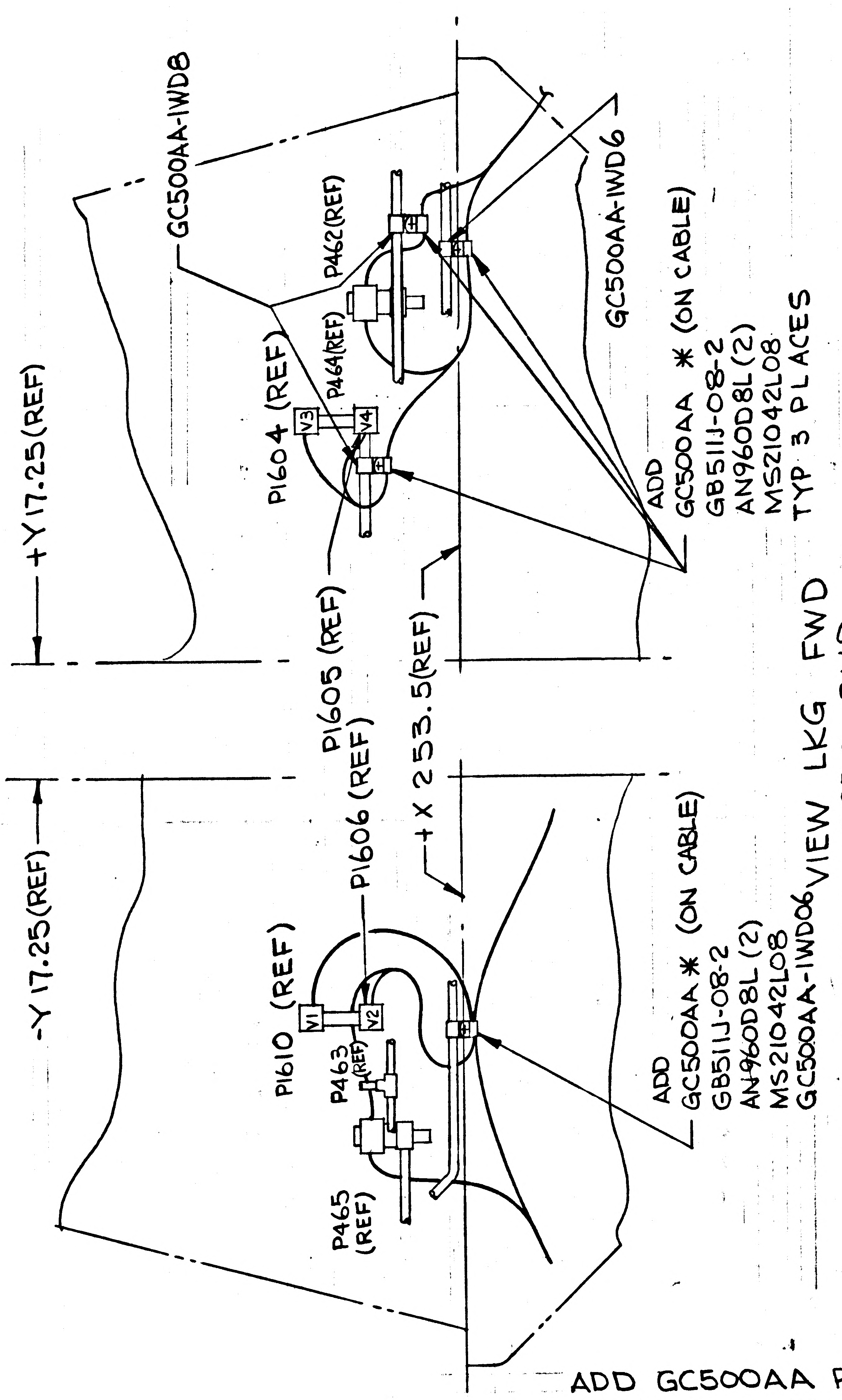

GC500AA-IWD8
+Y17.25(REF)
P1604 (REF)
V3
V4
P464(REF)
P462(REF)
GC500AA-IWD6
P1605 (REF)
+X 253.5(REF)
ADD
GC500AA * (ON CABLE)
GB511J-08-2
AN960D8L (2)
MS21042L08
TYP 3 PLACES
-Y 17.25(REF)
P1606 (REF)
P1610 (REF)
V1
V2
P463 (REF)
P465 (REF)
ADD
GC500AA * (ON CABLE)
GB511J-08-2
AN960D8L (2)
MS21042L08
GC500AA-IWD06

VIEW LKG FWD
-Z27.0 BHD
(ZONE 37A SH9)

LDW280-52360 -1 INSTL

ADD GC500AA PER LPC280-23
WHERE SO INDICATED *

DETAIL SPEC REQ ☐ CL II ENGRG CHG ✓ CL I ENGRG CHG ☐ LCD 1078

REASON FOR EO: TO PREVENT WIRE CHAFING

DESCRIPTION OF EO: ON -1 INSTL ADDED GC500AA (4)
GC511J-08-2(4), AN960D8L(8), MS21042-08(4)

GAEC EO RELEASE: K 9/7/7

MODEL	EFFECTIVITY: PROCURING ACTIVITY NO.	EFFECTIVITY: GAEC UNIT NO.	EFFECTIVITY: SUB CONTR UNIT NO.
LM		LM-2(32)	

DRAWING CHANGE REQD: REVISE DWG ✓ RECORD EO
DISPOSITION OF PARTS: REWORK ✓ SCRAP

	APPROVED BY	SUPPORT	RELIAB. GROUP	GROUP LEADER	STRESS GROUP	LIAISON ENGRG	PROJ ENGRG	~~CONT~~
	JAP			JW	CW			
DATE	9/1/67			9/5/67	9/6/67		9/7	9/7/67
	VD1							

PRIORITY: C

DRAWING TITLE: LINES INSTALLATION ELECTRON. ASCENT STAGE ~ AFT EQUIP. BAY

DRAWING NO.: LDW280-52360

EO NO.: C10

4/9 ISSUED BY DAN CAROLEO EX:1153 SECTION EQUIP. LINES/VDI GROUP NO. 332 PL 25

ENG 32.1 REV 3-65

GRUMMAN AIRCRAFT ENGINEERING CORP.
CODE IDENT NO. 26512
ENGINEERING ORDER

DWG. NO. LDW280-52360 | EO NO. D1
CONTROL INFO NO. LDW280A9129

GC500AA-IWD06 WAS: GC500AA-IWD6

GC500AA-IWD08 WAS: GC500AA-IWD8

THIS EO IS A REVISION OF EO C10

DETAIL SPEC REQ		CL II ENGRG CHG	✓	CL I ENGRG CHG	LCD 1078 5

REASON FOR EO: TO CORRECT PIPE CLAMP CALL-OUT

DESCRIPTION OF EO: REF. EO C10
GC500AA-IWD6 & GC500AA-IWD8(2)
CHANGED TO GC500AA-IWD06 & GC500AA-IWD08(2)

(R) GAEC EO RELEASE JK 9/13/7

MODEL	PROCURING ACTIVITY NO.	GAEC UNIT NO.	SUB CONTR UNIT NO.
LM		LM-2(32)	

DRAWING CHANGE REQD: REVISE DWG ✓ | RECORD EO
DISPOSITION OF PARTS: REWORK ✓ | SCRAP

	VDI	SUPPORT	RELIAB. GROUP	GROUP LEADER	STRESS GROUP	LIAISON ENGRG	PROJ ENGRG	GOVT
APPROVED BY				exe	JV			Botti
DATE	9/11/67			9/11/67	9/11/67		9/12/67	9-12-67

PRIORITY: C
DRAWING TITLE: LINES INSTLLATION ELECTRONIC ASCENT STAGE ~ AFT EQUIP BAY
DRAWING NO.: LDW280-52360
EO NO.: D1

ISSUED BY DAN CAROLEO EX 1153 SECTION EQUIP. LINES/VDI GROUP NO. 332 PL 25

01

NAS 9-1100

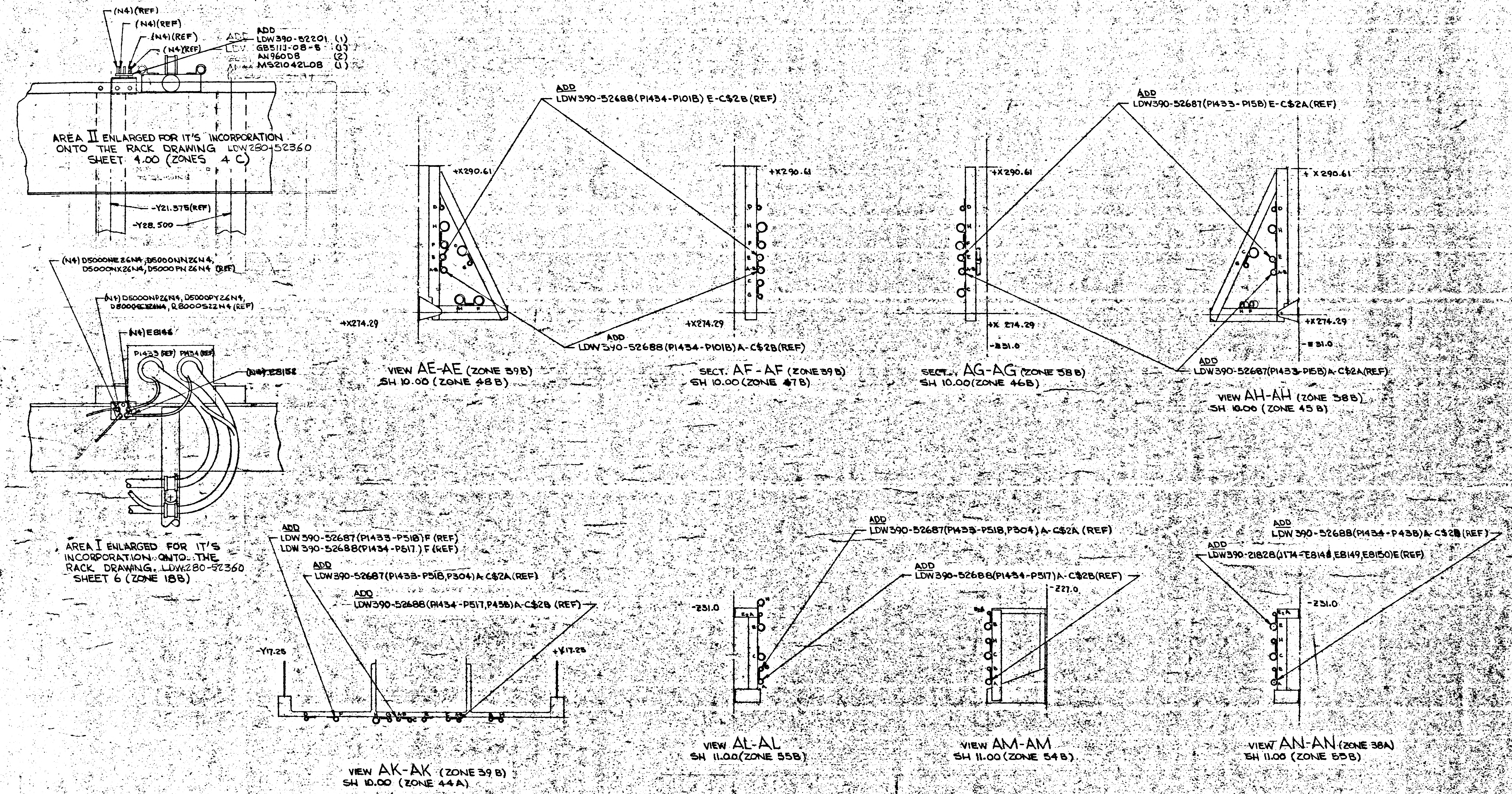
(N4)(REF)
(N4)(REF)
(N4)(REF)
(N4)(REF)
ADD
LDW390-52201 (1)
GB511J-08-8 (1)
AN960D8 (2)
MS21042L08 (1)
-Y21.375(REF)
-Y28.500
(N4) D5000NE26N4, D5000NN26N4, D5000NX26N4, D5000PN26N4 (REF)
(N4) D5000NP26N4, D5000PY26N4, D8000SX26N4, R8000S22N4 (REF)
(N4) E8146
P1433 (REF) P1434 (REF)
(N4) E8158
ADD
LDW390-52688(P1434-P101B) E-C$2B (REF)
+X290.61
+X274.29
ADD
LDW390-52688(P1434-P101B) A-C$2B (REF)
+X290.61
+X274.29
ADD
LDW390-52687(P1433-P15B) E-C$2A (REF)
+X290.61
+X 274.29
-Z31.0
+X290.61
+X274.29
-Z31.0
ADD
LDW390-52687(P1433-P15B) A-C$2A (REF)
ADD
LDW390-52687(P1433-P518)F (REF)
LDW390-52688(P1434-P517) F (REF)
ADD
LDW390-52687(P1433-P518,P304) A-C$2A (REF)
ADD
LDW390-52688(P1434-P517,P438) A-C$2B (REF)
-Y17.25
+Y17.25
ADD
LDW390-52687(P1433-P518,P304) A-C$2A (REF)
ADD
LDW390-52688(P1434-P517) A-C$2B (REF)
-Z31.0
-Z27.0
ADD
LDW390-52688(P1434-P438) A-C$2B (REF)
ADD
LDW390-21828(J174-E8148,E8149,E8150)E (REF)
-Z31.0

AREA II ENLARGED FOR IT'S INCORPORATION ONTO THE RACK DRAWING LDW280-52360 SHEET 4.00 (ZONES 4 C)

AREA I ENLARGED FOR IT'S INCORPORATION ONTO THE RACK DRAWING. LDW280-52360 SHEET 6 (ZONE 18B)

VIEW AE-AE (ZONE 39B)
SH 10.00 (ZONE 48B)

SECT. AF-AF (ZONE 39B)
SH 10.00 (ZONE 47B)

SECT. AG-AG (ZONE 38B)
SH 10.00 (ZONE 46B)

VIEW AH-AH (ZONE 38B)
SH 10.00 (ZONE 45B)

VIEW AK-AK (ZONE 39B)
SH 10.00 (ZONE 44A)

VIEW AL-AL
SH 11.00 (ZONE 55B)

VIEW AM-AM
SH 11.00 (ZONE 54B)

VIEW AN-AN (ZONE 38A)
SH 11.00 (ZONE 55B)

01Z03

NAS 9-1100

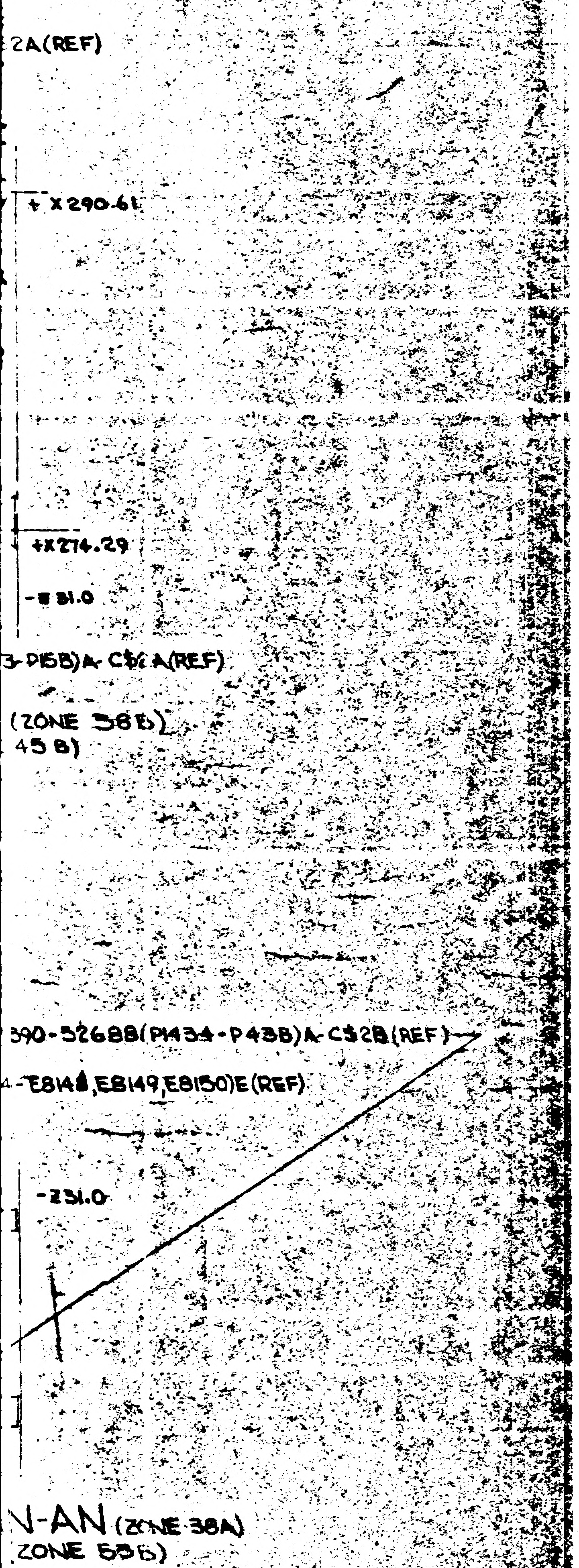
2A(REF)
+X290.61
+X274.29
-Z31.0
3-P15B)A-C$2A(REF)
(ZONE 38B)
45B)
390-52688(P1434-P43B)A-C$2B(REF)
4-E8148,E8149,E8150)E(REF)
-Z31.0
V-AN (ZONE 38A)
ZONE 53B)

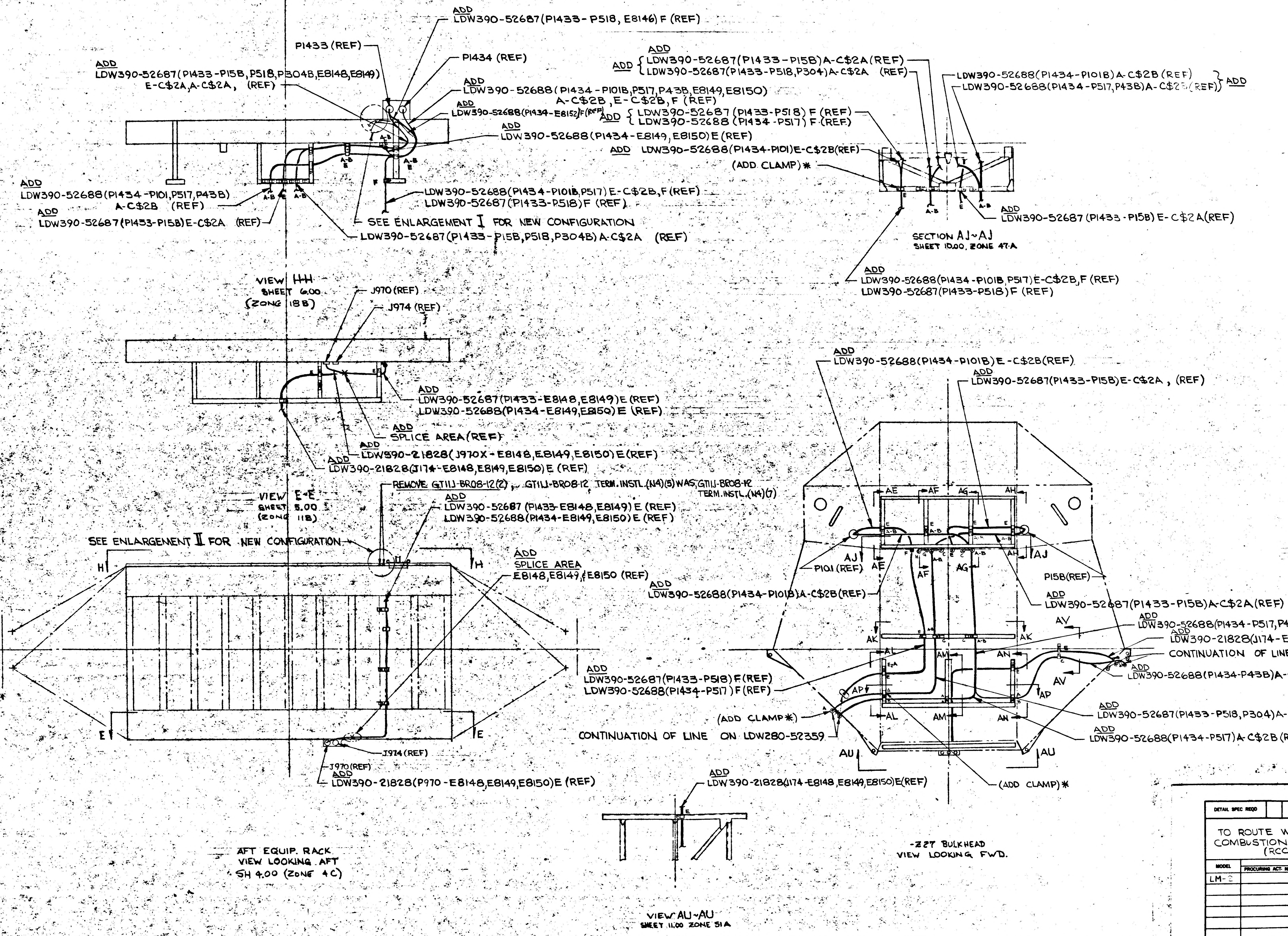
ADD
LDW390-52687(P1433-P518, E8146) F (REF)
P1433 (REF)
P1434 (REF)
ADD
LDW390-52687(P1433-P15B,P518,P304B,E8148,E8149)
E-C$2A,A-C$2A, (REF)
ADD
LDW390-52688(P1434-P101B,P517,P43B,E8149,E8150)
A-C$2B,E-C$2B,F (REF)
ADD
LDW390-52688(P1434-E8152)F(REF)
ADD
LDW390-52688(P1434-E8149,E8150)E(REF)
ADD
LDW390-52688(P1434-P101,P517,P43B)
A-C$2B (REF)
ADD
LDW390-52687(P1433-P15B)E-C$2A (REF)
LDW390-52688(P1434-P101B,P517)E-C$2B,F(REF)
LDW390-52687(P1433-P518)F (REF)
SEE ENLARGEMENT I FOR NEW CONFIGURATION
LDW390-52687(P1433-P15B,P518,P304B)A-C$2A (REF)
A-B
E
F
ADD
ADD { LDW390-52687(P1433-P15B)A-C$2A(REF)
LDW390-52687(P1433-P518,P304)A-C$2A (REF)
ADD { LDW390-52687 (P1433-P518) F (REF)
LDW390-52688 (P1434-P517) F (REF)
ADD LDW390-52688(P1434-P101)E-C$2B(REF)
(ADD CLAMP)*
LDW390-52688(P1434-P101B)A-C$2B (REF)
LDW390-52688(P1434-P517,P43B)A-C$2B(REF) } ADD
ADD
LDW390-52687 (P1433-P15B) E-C$2A(REF)
SECTION AJ~AJ
SHEET 10.00, ZONE 47-A
ADD
LDW390-52688(P1434-P101B,P517)E-C$2B,F (REF)
LDW390-52687(P1433-P518)F (REF)
VIEW H-H
SHEET 6.00
(ZONE 18B)
J970 (REF)
J974 (REF)
ADD
LDW390-52687(P1433-E8148,E8149)E (REF)
LDW390-52688(P1434-E8149,E8150)E (REF)
ADD
SPLICE AREA(REF)
ADD
LDW390-21828(J970X-E8148,E8149,E8150)E(REF)
ADD
LDW390-21828(J174-E8148,E8149,E8150)E (REF)
REMOVE GT11J-BR08-12(2) , GT11J-BR08-12 TERM.INSTL.(N4)(5) WAS GT11J-BR08-12 TERM.INSTL.(N4)(7)
VIEW E-E
SHEET 5.00
(ZONE 11B)
ADD
LDW390-52687 (P1433-E8148,E8149) E (REF)
LDW390-52688(P1434-E8149,E8150) E (REF)
SEE ENLARGEMENT II FOR NEW CONFIGURATION
H
H
ADD
SPLICE AREA
E8148,E8149,E8150 (REF)
E
E
J974 (REF)
J970 (REF)
ADD
LDW390-21828(P970-E8148,E8149,E8150)E (REF)
AFT EQUIP. RACK
VIEW LOOKING AFT
SH 4.00 (ZONE 4C)
ADD
LDW390-52688(P1434-P101B)E-C$2B(REF)
ADD
LDW390-52687(P1433-P15B)E-C$2A , (REF)
AE
AF
AG
AH
AJ
AJ
P101 (REF)
P15B(REF)
ADD
LDW390-52688(P1434-P101B)A-C$2B(REF)
ADD
LDW390-52687(P1433-P15B)A-C$2A(REF)
AV
ADD
LDW390-52688(P1434-P517,P43B)A-C$2B(REF)
ADD
LDW390-21828(J174-E8148,E8149,E8150) E (REF)
CONTINUATION OF LINES ON LDW280-52359
ADD
LDW390-52688(P1434-P43B)A-C$2B(REF)
AK
AK
AL
AM
AN
AP
AP
AV
ADD
LDW390-52687(P1433-P518)F(REF)
LDW390-52688(P1434-P517)F(REF)
(ADD CLAMP*)
CONTINUATION OF LINE ON LDW280-52359
ADD
LDW390-52687(P1433-P518,P304)A-C$2A (REF)
ADD
LDW390-52688(P1434-P517)A-C$2B (REF)
AU
AU
(ADD CLAMP)*
ADD
LDW390-21828(J174-E8148,E8149,E8150)E(REF)
-227 BULKHEAD
VIEW LOOKING FWD.
VIEW AU~AU
SHEET 11.00 ZONE 51A

ADD
LDW390-52688(P14

NOTE:

1. ADD GC500AA CLA
SO INDICATED *.

DESCRIPT
ON -1 IN
LDW390-
-227.0
GB511
GT11J-

DETAIL SPEC REQD		CLASS II ENGRG CHG		CLASS I ENGRG CHG	
REASON FOR EO TO ROUTE WIRE FOR ROUGH COMBUSTION CUT-OFF ASSEMBLY (RCCA)					

MODEL	EFFECTIVITY PROCURING ACT. NO.	GAEC UNIT NO.	SUB CONTR UNIT NO.	DRAW REVISION
LM-2		(32)		✓ REVISE DWG
				PRIORITY C

ISSUED BY D. CAROLEO SECTION EQUIP LINES GROUP NO. 332

02/03 NAS 9-1100

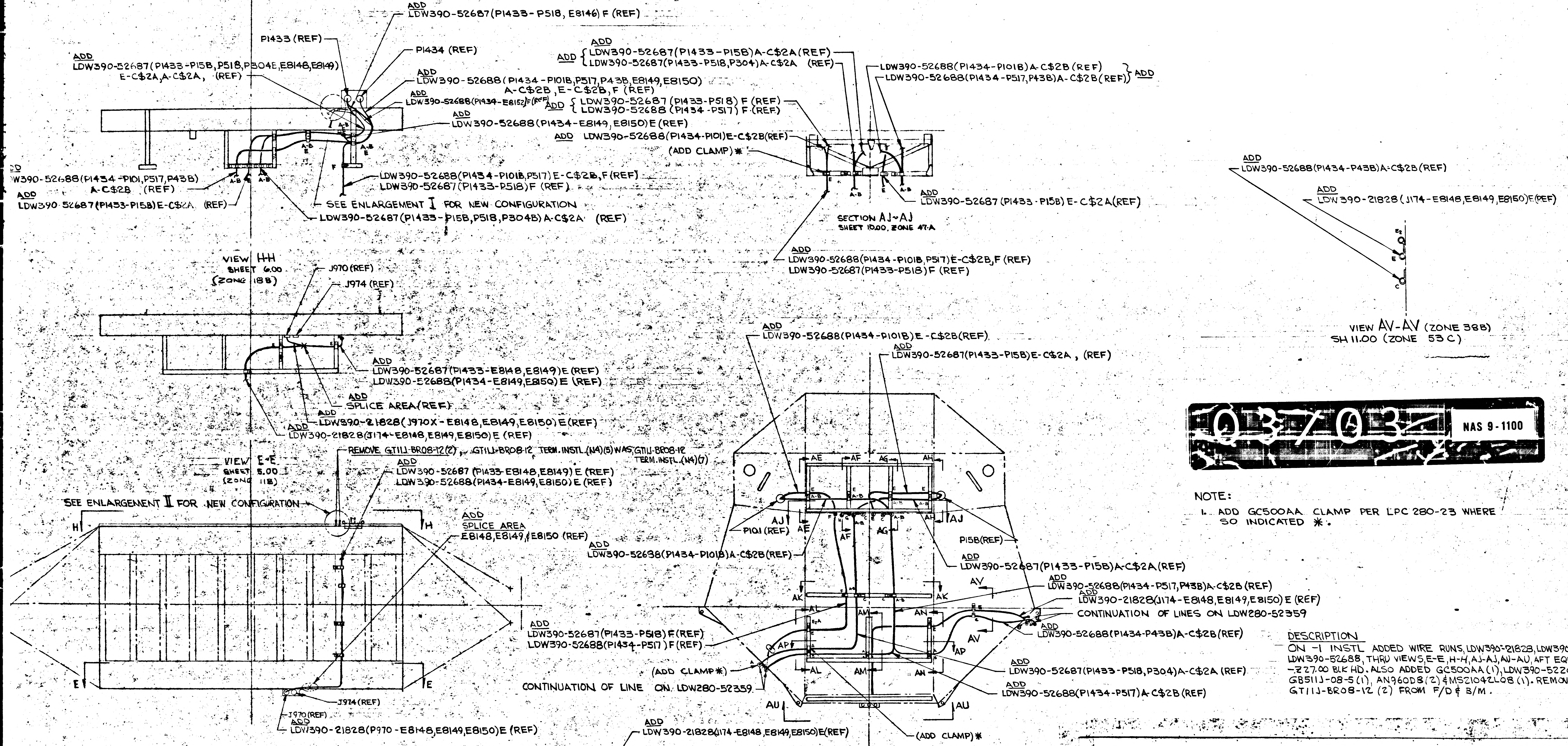
ADD
LDW390-52687(P1433-P518, E8146) F (REF)
P1433 (REF)
P1434 (REF)
ADD
LDW390-52687(P1433-P15B,P518,P304E,E8148,E8149)
E-C$2A,A-C$2A, (REF)
ADD
LDW390-52688 (P1434-P101B,P517,P43B,E8149,E8150)
A-C$2B ,E-C$2B, F (REF)
ADD
LDW390-52688(P1434-E8152)F(REF)
ADD
LDW390-52688(P1434-E8149, E8150) E (REF)
ADD
LDW390-52688(P1434-P101,P517,P43B)
A-C$2B (REF)
ADD
LDW390-52687(P1433-P15B)E-C$2A (REF)
A-B
E
F
LDW390-52688(P1434-P101B,P517) E-C$2B,F (REF)
LDW390-52687(P1433-P518)F (REF)
SEE ENLARGEMENT I FOR NEW CONFIGURATION
LDW390-52687(P1433-P15B,P518,P304B) A-C$2A (REF)
ADD
ADD { LDW390-52687(P1433-P15B)A-C$2A(REF)
LDW390-52687(P1433-P518,P304)A-C$2A (REF)
LDW390-52688(P1434-P101B)A-C$2B (REF)
LDW390-52688(P1434-P517,P43B)A-C$2B(REF) } ADD
ADD { LDW390-52687 (P1433-P518) F (REF)
LDW390-52688 (P1434-P517) F (REF)
ADD LDW390-52688(P1434-P101)E-C$2B(REF)
(ADD CLAMP) *
ADD
LDW390-52687 (P1433-P15B) E-C$2A(REF)
SECTION AJ~AJ
SHEET 10.00, ZONE 47-A
ADD
LDW390-52688(P1434-P101B,P517)E-C$2B,F (REF)
LDW390-52687(P1433-P518)F (REF)
VIEW H-H
SHEET 6.00
(ZONE 18B)
J970 (REF)
J974 (REF)
ADD
LDW390-52687(P1433-E8148,E8149)E (REF)
LDW390-52688(P1434-E8149,E8150) E (REF)
ADD
SPLICE AREA(REF)
ADD
LDW390-21828(J970X-E8148,E8149,E8150) E(REF)
ADD
LDW390-21828(J174-E8148,E8149,E8150) E (REF)
REMOVE GT11J-BR08-12(2), GT11J-BR08-12 TERM. INSTL.(N4)(5) WAS GT11J-BR08-12 TERM. INSTL.(N4)(7)
VIEW E-E
SHEET 5.00
(ZONE 11B)
ADD
LDW390-52687 (P1433-E8148,E8149) E (REF)
LDW390-52688(P1434-E8149,E8150) E (REF)
SEE ENLARGEMENT II FOR NEW CONFIGURATION
H
H
ADD
SPLICE AREA
E8148,E8149,&E8150 (REF)
E
E
J974 (REF)
J970 (REF)
ADD
LDW390-21828(P970-E8148,E8149,E8150)E (REF)
ADD
LDW390-52688(P1434-P101B)E-C$2B(REF)
ADD
LDW390-52687(P1433-P15B)E-C$2A , (REF)
AE
AF
AG
AH
AJ
AJ
P101 (REF)
P15B(REF)
ADD
LDW390-52688(P1434-P101B)A-C$2B(REF)
ADD
LDW390-52687(P1433-P15B)A-C$2A(REF)
AV
AK
AK
ADD
LDW390-52688(P1434-P517,P43B)A-C$2B (REF)
ADD
LDW390-21828(J174-E8148,E8149,E8150) E (REF)
CONTINUATION OF LINES ON LDW280-52359
ADD
LDW390-52688(P1434-P43B)A-C$2B(REF)
AL
AM
AN
AP
AP
AV
ADD
LDW390-52687(P1433-P518)F(REF)
LDW390-52688(P1434-P517)F(REF)
(ADD CLAMP*)
CONTINUATION OF LINE ON LDW280-52359
ADD
LDW390-52687(P1433-P518,P304)A-C$2A (REF)
ADD
LDW390-52688(P1434-P517)A-C$2B (REF)
AU
AU
ADD
LDW390-21828(J174-E8148,E8149,E8150)E(REF)
(ADD CLAMP)*
ADD
LDW390-52688(P1434-P43B)A-C$2B (REF)
ADD
LDW390-21828 (J174-E8148,E8149,E8150)E(REF)
VIEW AV-AV (ZONE 38B)
SH 11.00 (ZONE 53C)

Q3703 NAS 9-1100

NOTE:

1. ADD GC500AA CLAMP PER LPC 280-23 WHERE SO INDICATED *.

DESCRIPTION

ON -1 INSTL ADDED WIRE RUNS, LDW390-21828, LDW390-52687 & LDW390-52688, THRU VIEWS, E-E, H-H, AJ-AJ, AU-AU, AFT EQUIP. BAY & -227.00 BLK HD. ALSO ADDED GC500AA (1), LDW390-52201-1 (1), GB511J-08-5 (1), AN960D8 (2) & MS21042L08 (1). REMOVED GT11J-BR08-12 (2) FROM F/D & B/M.

AFT EQUIP. RACK
VIEW LOOKING AFT
SH 4.00 (ZONE 4C)

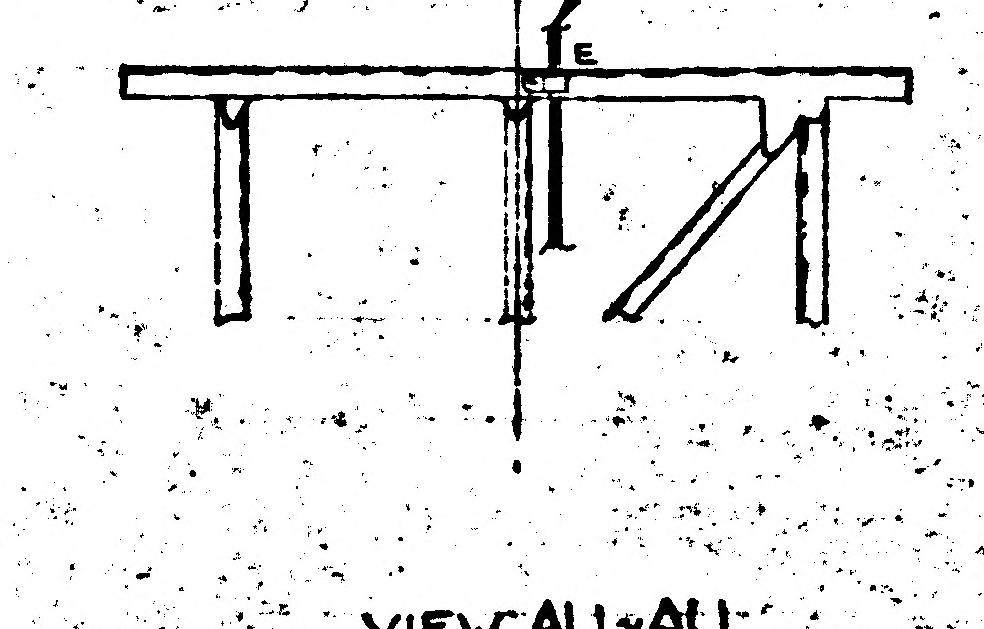

VIEW AU-AU
SHEET 11.00 ZONE 51A

-227 BULKHEAD
VIEW LOOKING FWD.

PRINTING INFO ONLY DWG SIZE 30X102
FULL SIZE SHEET AREA (30X102) = 21.3 SQ.FT
1/2 SHEET AREA (1/4 OF FULL) = 5.3

DETAIL SPEC REQD		CLASS II ENGRG CHG		CLASS I ENGRG CHG	✓	LCD 1978					CONTROL INFO NO. LDW280A-8915	
REASON FOR EO TO ROUTE WIRE FOR ROUGH COMBUSTION CUT-OFF ASSEMBLY (RCCA)				DESCRIPTION OF EO SEE DESCRIPTION ABOVE							GRUMMAN EO RELEASE JK	
MODEL	EFFECTIVITY PROCURING ACT. NO.	GAEC UNIT NO.	SUB CONTR UNIT NO.	DRAWING REVISION REQD	DISPOSITION OF PARTS	BY						
LM-2		LM-2(32)		✓ REVISE DWG	✓ REWORK	DATE 2/13/67					2/15/67	
				RECORD EO	SCRAP	VD1	SUPPORT	RELIAB GROUP	GROUP LEADER	STRESS GROUP	LIAISON ENGRG	PROJ ENGR
				PRIORITY C	DRAWING TITLE LINES INSTALLATION ELECTRONIC ~ A/S ~ AFT EQUIP. BAY				ENGINEERING ORDER DRAWING NO. LDW280-52360			EO NO. 72
ISSUED BY D. CAROLEO	SECTION EQUIP LINES VDI	GROUP NO. 332 EX:1153	PL 25	CODE IDENT NO. 26512	GRUMMAN AIRCRAFT ENGINEERING CORP BETHPAGE, L. I., N. Y.							

ENG 38.3 REV 3-65

ENG 33.2 REV 3-66

GRUMMAN AIRCRAFT ENGINEERING CORP.
CODE IDENT NO. 26512
ENGINEERING ORDER

DWG. NO. LDW280-52360 EO NO. D3
CONTROL INFC NO. LDW280A 9407

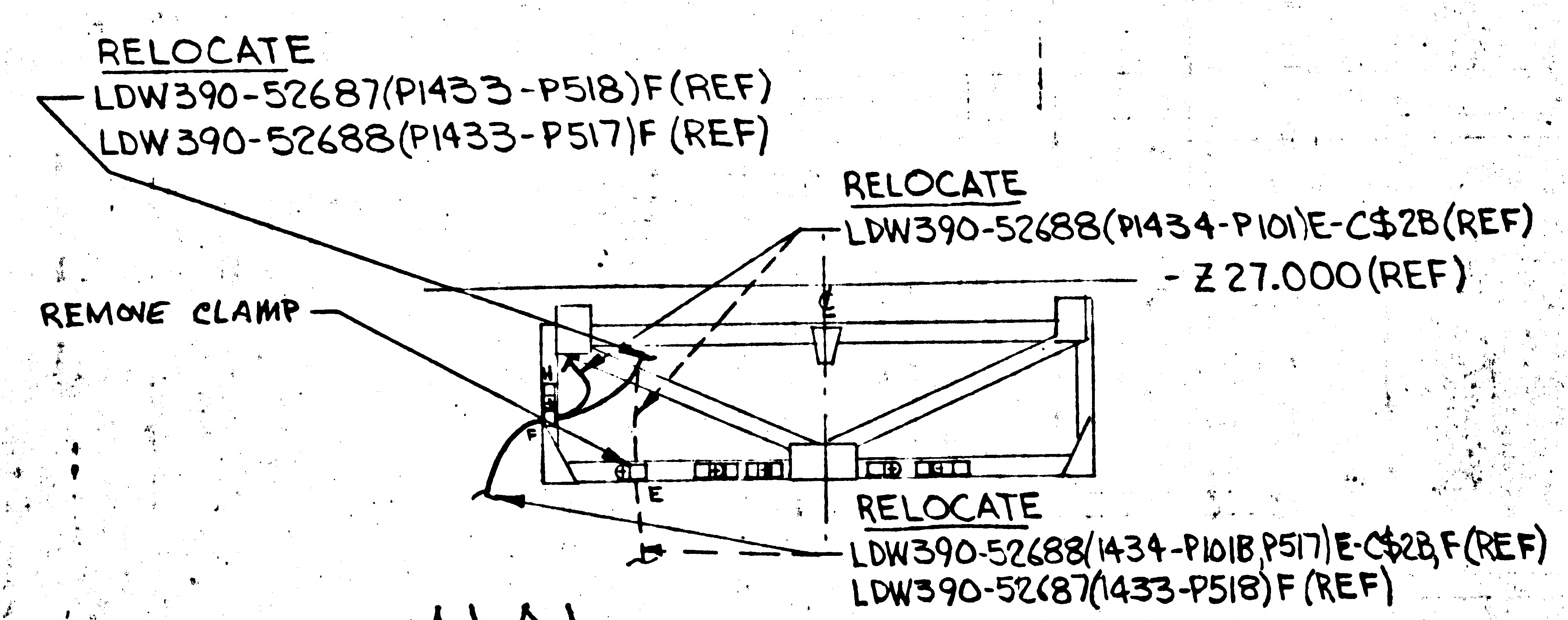
RELOCATE
LDW390-52687(P1433-P518)F(REF)
LDW390-52688(P1433-P517)F(REF)
RELOCATE
LDW390-52688(P1434-P101)E-C$2B(REF)
-Z 27.000(REF)
REMOVE CLAMP
E
F
H
RELOCATE
LDW390-52688(1434-P101B,P517)E-C$2B,F(REF)
LDW390-52687(1433-P518)F(REF)

SECTION AJ-AJ
SHEET 10.00 (ZONE 47A)

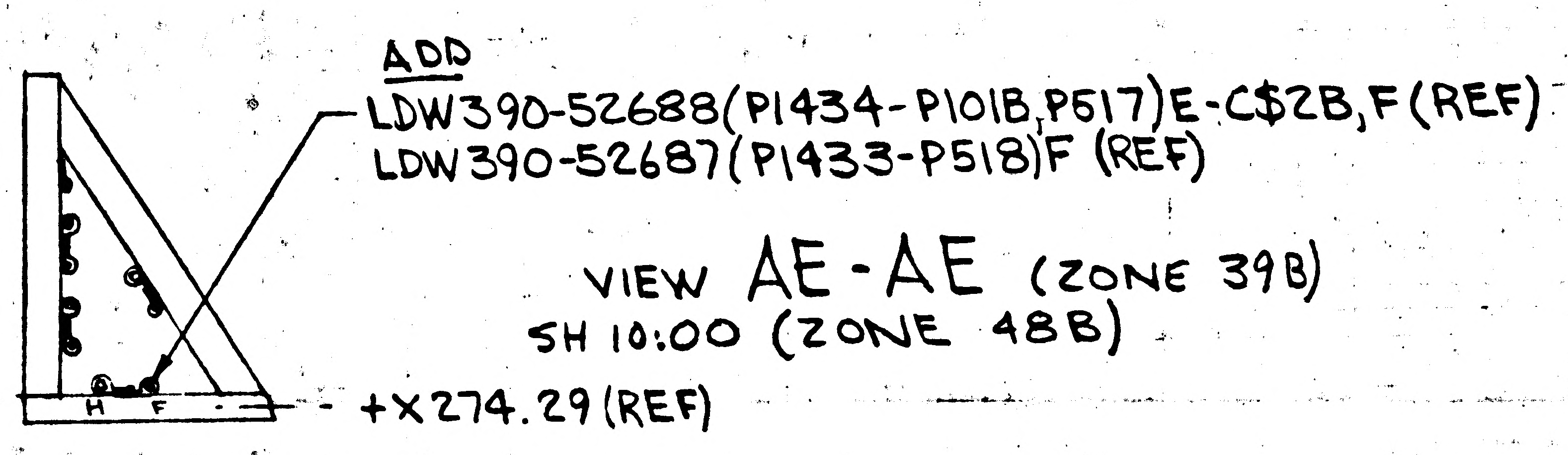
ADD
LDW390-52688(P1434-P101B,P517)E-C$2B,F(REF)
LDW390-52687(P1433-P518)F(REF)
H
F
+X274.29(REF)

VIEW AE-AE (ZONE 39B)
SH 10:00 (ZONE 48B)

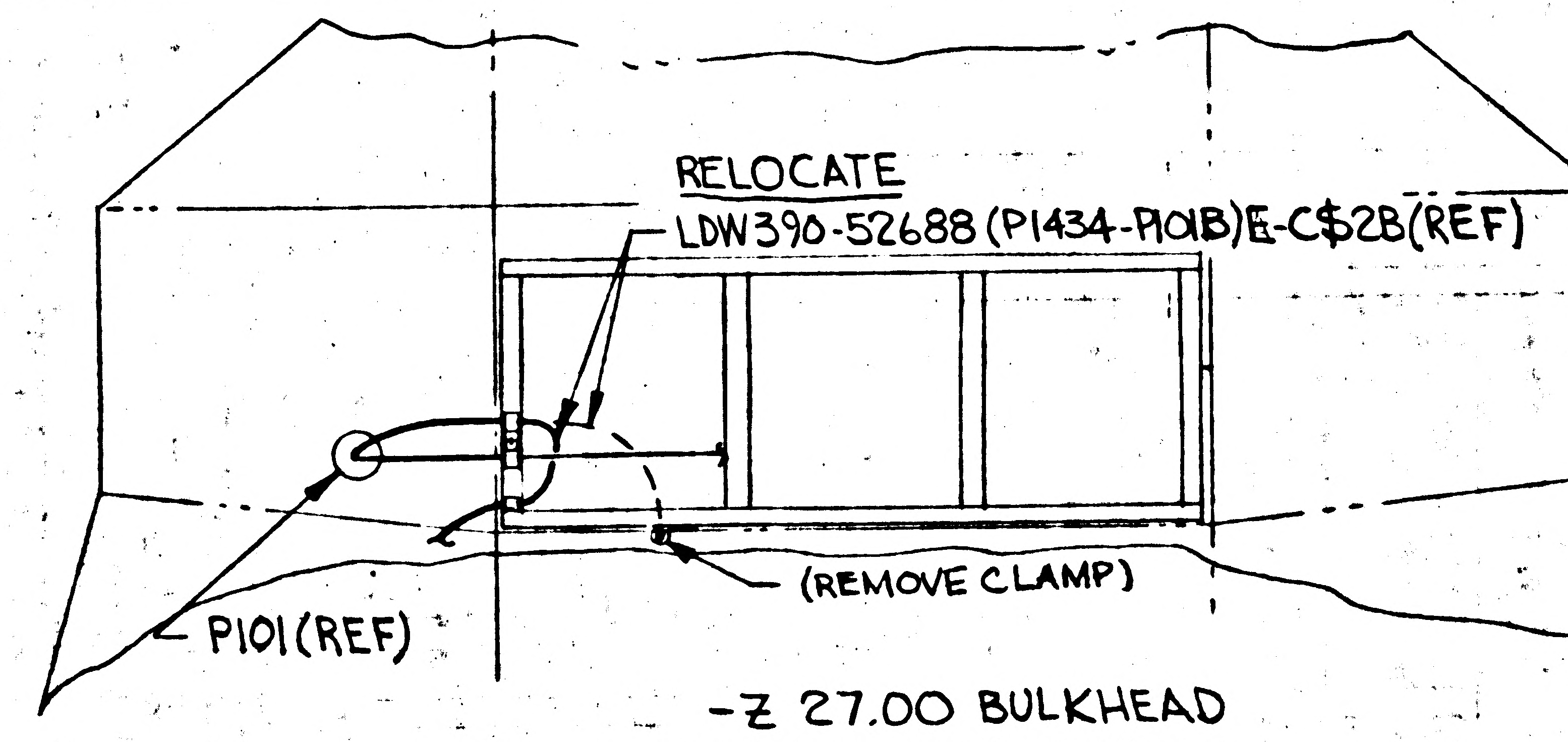
RELOCATE
LDW390-52688(P1434-P101B)E-C$2B(REF)
(REMOVE CLAMP)
P101(REF)

-Z 27.00 BULKHEAD
VIEW LOOKING FWD
SH 9.00 (ZONE 38A)

THIS EO REVISES EO D2

DETAIL SPEC REQ		CL II ENGRG CHG		CL I ENGRG CHG	✓	LCD 1978							
REASON FOR EO TO CORRECT LOCATION OF WIRE ROUTING				DESCRIPTION OF EO ON-1 INSTL RE-LOCATED LDW390-52688 IN VIEWS AJ-AJ, AE-AE & VIEW LKG FWD AT-Z								GAEC EO RELEASE JK 9/30	
MODEL	EFFECTIVITY PROCURING ACTIVITY NO.	GAEC UNIT NO.	SUB CONTR UNIT NO.	DRAWING CHANGE REQD		DISPOSITION OF PARTS		APPROVED BY			JW		
								DATE	9/27		9/27/67	9/28/67	9/27
LM		LM-2(32)		✓ REVISE DWG	RECORD EO	✓ REWORK	SCRAP	R	VDI	SUPPORT	RELIAB GROUP	GROUP LEADER	STRESS GROUP	LIAISON ENGRG	PROJ ENGRG
				PRIORITY C	DRAWING TITLE LINES INSTL. ELECTRONICS~ASCENT STAGE~AFT EQUIP BAY					DRAWING NO. LDW280-52360		EO NO. D3	

10/2
ISSUED BY DAN CAROLEO EX 1153 SECTION EQUIP. LINES/VDI GROUP NO. 332 PL 25

01
NAS 9-1100

ENG 32.1 REV 3-65 B

GRUMMAN AIRCRAFT ENGINEERING CORP.
CODE IDENT NO. 26512
ENGINEERING ORDER

*

DWG. NO. LDW280-52360
EO NO. D4
CONTROL INFO NO. LDW280B0420

THIS EO CANCELS EO B1

DETAIL SPEC REQ		CL II ENGRG CHG		CL I ENGRG CHG	✓	LCP 1299 (5)

REASON FOR EO: EO B1 WAS REMOVED FROM VEHICAL UPON INCORPORATION OF EO B10

DESCRIPTION OF EO: CANCELED EO B1

Ⓡ GAEC EO RELEASE: C
JK 11/16/67

MODEL	PROCURING ACTIVITY NO.	GAEC UNIT NO.	SUB CONTR UNIT NO.
LM		LM-2 (32)	

DRAWING CHANGE REQD: REVISE DWG	RECORD EO	DISPOSITION OF PARTS: REWORK	SCRAP
✓		✓	

APPROVED BY					CW			
DATE	11/16/67			11/16/67	11/16/67		11/16/67	11/16/67
E	VDI	SUPPORT	RELIAB. GROUP	GROUP LEADER	STRESS GROUP	LIAISON ENGRG	PROJ ENGRG	

PRIORITY	DRAWING TITLE	DRAWING NO.	EO NO.
C	LINES INSTL ELECTRONICS ASCENT STAGE -227.00 BHD	LDW280-52360	D4

11/17 ISSUED BY DAN CAROLEO EX: 1153 SECTION EQUIP. LINES/VDI GROUP NO. 332 PL 25

01

NAS 9-1100

ENG 32.1 REV 3-65 B

GRUMMAN AIRCRAFT ENGINEERING CORP.
CODE IDENT NO. 26512
ENGINEERING ORDER

DWG. NO. LDW280-52360 | EO NO. E1
CONTROL INFO NO. LDW280B0102

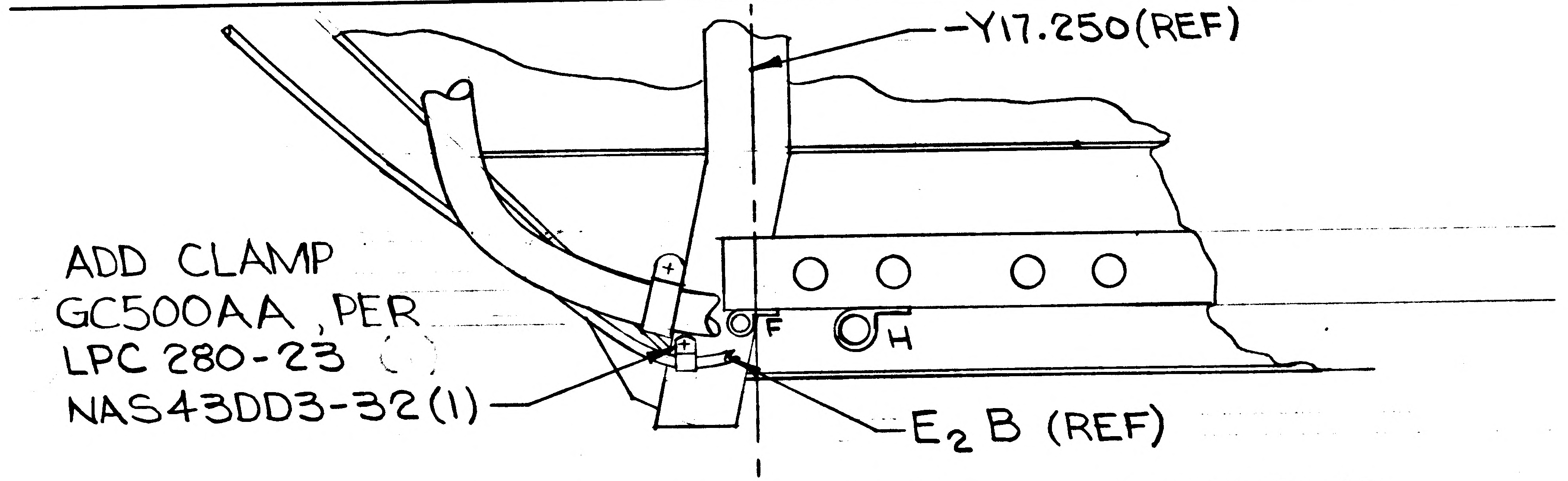

VIEW LKG FWD ~ -Z27 BHD
SH 9.00 (ZONE 39A)

LDW280-52360-1 INSTL

DETAIL SPEC REQ ☐ | CL II ENGRG CHG ☑ | CL I ENGRG CHG ☐ | LCD 1078 (5)

REASON FOR EO: LOCATE CLAMPING POINT TO PREVENT CHAFEING TO WIRE

DESCRIPTION OF EO: ON-1 INSTL ADDED CLAMP GC500AA AND SPACER NAS43DD3-32

GAEC EO RELEASE: Ⓡ VK 10/31/7

MODEL	PROCURING ACTIVITY NO.	GAEC UNIT NO.	SUB CONTR UNIT NO.
LM		LM-2 (32)	

DRAWING CHANGE REQD: REVISE DWG ✓ | RECORD EO
DISPOSITION OF PARTS: REWORK ✓ | SCRAP

APPROVED BY	JAS			JW	OR		WB	
DATE	10/27/67			10-26-67	10/30/67		10/30/67	10-31-67
E	VDI	SUPPORT	RELIAB. GROUP	GROUP LEADER	STRESS GROUP	LIAISON ENGRG	PROJ ENGRG	~~CONT~~

PRIORITY C
DRAWING TITLE: LINES INSTL. ELECTRONICS ASCENT STAGE ~ -Z27.00 BHD ~ EQUIP LINES
DRAWING NO. LDW280-52360
EO NO. E1

11-06
ISSUED BY DAN. CAROLEO EX: 1153
SECTION EQUIP. LINES/VDI
GROUP NO. 332
PL 25

01

NAS 9-1100

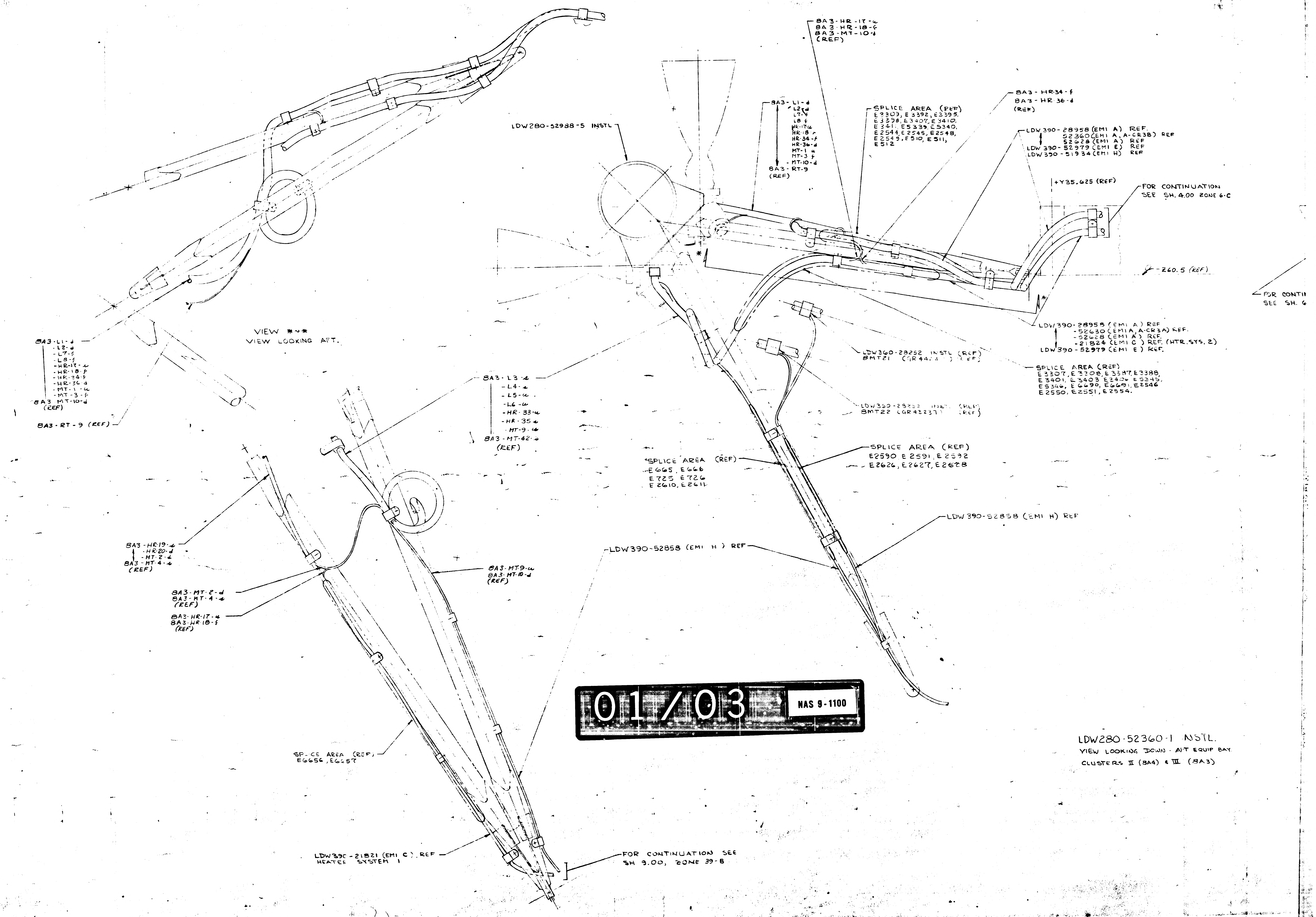
VIEW *~*
VIEW LOOKING AFT.
8A3-L1-d
-L2-d
-L7-f
-L8-f
-HR-17-u
-HR-18-f
-HR-34-f
-HR-36-d
-MT-1-u
-MT-3-f
8A3 MT-10-d
(REF)
8A3-RT-9 (REF)
LDW280-52988-5 INSTL
8A3-L1-d
L2-d
L7-f
L8 f
HR-17-u
HR-18-f
HR-34-f
HR-36-d
MT-1 u
MT-3 f
-MT-10-d
8A3-RT-9
(REF)
8A3-HR-17-u
8A3-HR-18-f
8A3-MT-10-d
(REF)
SPLICE AREA (REF)
E3309, E3392, E3395,
E3398, E3407, E3410,
E3411, E5339, E5340,
E2544, E2545, E2548,
E2549, E510, E511,
E512
8A3-HR-34-f
8A3-HR-36-d
(REF)
LDW390-28958 (EMI A) REF.
52360 (EMI A, A-CR3B) REF
52628 (EMI A) REF
LDW390-52979 (EMI E) REF
LDW390-51934 (EMI H) REF
+Y35.625 (REF)
FOR CONTINUATION
SEE SH. 4.00 ZONE 6-C
℄-Z60.5 (REF)
FOR CONTI
SEE SH. 6
LDW390-28958 (EMI A) REF
-52630 (EMI A, A-CR3A) REF.
-52628 (EMI A) REF.
-21824 (EMI C) REF. (HTR. SYS. 2)
LDW390-52979 (EMI E) REF.
LDW360-28252 INSTL (REF)
8MT21 (GR44) (REF)
SPLICE AREA (REF)
E3307, E3308, E3387, E3388,
E3401, E3403, E3406, E5345,
E5346, E6690, E6691, E2546
E2550, E2551, E2554.
LDW360-28252 INSTL (REF)
8MT22 (GR43237) (REF)
8A3-L3-u
-L4-u
-L5-u
-L6-u
-HR-33-u
-HR-35-u
-MT-9-u
8A3-MT-42-u
(REF)
SPLICE AREA (REF)
E665, E666
E725, E726
E2610, E2611
SPLICE AREA (REF)
E2590, E2591, E2592
E2626, E2627, E2628
LDW390-52858 (EMI H) REF
LDW390-52858 (EMI H) REF
8A3-HR-19-u
-HR-20-d
-MT-2-d
8A3-MT-4-u
(REF)
8A3-MT-2-d
8A3-MT-4-u
(REF)
8A3-HR-17-u
8A3-HR-18-f
(REF)
8A3-MT-9-u
8A3-MT-10-d
(REF)
SPLICE AREA (REF)
E6656, E6657
LDW390-21821 (EMI C) REF
HEATER SYSTEM 1
FOR CONTINUATION SEE
SH 9.00, ZONE 39-B

LDW280-52360-1 INSTL.
VIEW LOOKING DOWN - AFT EQUIP BAY
CLUSTERS II (8A4) & III (8A3)

01/03 NAS 9-1100

-f
-d
28958 (EMI A) REF.
52360 (EMI A, A-CR3B) REF
52628 (EMI A) REF
52979 (EMI E) REF
51934 (EMI H) REF
35.625 (REF)
FOR CONTINUATION SEE SH. 4.00 ZONE 6-C
Z60.5 (REF)
90-28958 (EMI A) REF
-52630 (EMI A, A-CR3A) REF.
-52628 (EMI A) REF.
-21824 (EMI C) REF. (HTR. SYS. 2)
90-52979 (EMI E) REF.
AREA (REF)
, E3308, E3387, E3388,
, E3403 E3406 E5345,
, E6690, E6691, E2546
, E2551, E2554.
REF
-Y35.625 (REF)
FOR CONTINUATION SEE SH. 6.00 ZONE 3-C
**
8A4-RT-8 (REF)
LDW360-28252 INSTL (REF)
8MT25 (GR4326T)
SPLICE AREA (REF)
E629, E630, E668
E669, E2598, E2599
E2600
LDW390-52858 (EMI H) REF
LDW280-52983-3 INSTL
LDW390-28958 (EMI. A)
-52628 (EMI. A)
-52629 (EMI. A, A-CR3B)
-52979 (EMI. E)
LDW 390-51934 (EMI. H)
(SYS. B) (REF)
LDW390-28958 (EMI. A)
-52628 (EMI. A)
-52629 (EMI. A, A-CR3A)
LDW 390 21824 (EMI. C) (HTR SYS. 2)
(SYS A) (REF)
SPLICE AREA (REF)
E3299 E3300, E3418 E3419,
E3427, E3431, E3436, E5347,
E5348, E6686, E6687.
SPLICE AREA (REF)
E506, E507, E508, E3301, E3302
E3422, E3425, E3426, E3432, E3439,
E5341, E5342 E2570, E2571, E2572,
E2573, E2574, E2575, E2576, E2577.
8A4-MT-9-u
8A4-HR-13-d
8A4-HR-15-f
(REF)
8A4-L3-e
-L4-e
-MT-1-u
-MT-9-u
-HR-13-d
8A4-HR-15-f
(REF) (SYS B)
8A4-L5-u
-L6-u
-MT-2-d
-MT-3-f
-MT-4-e
8A4-RT-8
(REF) (SYS B)
8A4-L5-u
-L6-u
-L7-f
-L9-f
-HR-31-f
-HR-32-u
-MT-4-e
8A4-MT-9-u
(REF)
8A4-HR-13-d
-HR-15-f
-MT-2-d
8A4-MT-3-f
(REF)
8A4-L1-d
-L2-d
-HR-29-d
8A4-HR-30-e
(REF) (SYS A)
8A4-L7-f
-L8-f
-HR-13-d
-HR-15-f
-HR-31-f
-HR-32-u
8A4-MT-9-u
(REF) (SYS A)
VIEW ** ~ **
VIEW LOOKING AFT
8A4-RT-8 (REF)
8A4-L3-e
-L4-e
-MT-1-u
-MT-9-u
-HR-13-d
8A4-HR-15-f
(REF) (SYS B)
8A4-L1-d
-L2-d
-HR-29-d
8A4-HR-30-e
(REF) (SYS A)
8A4-MT-9-u
8A4-MT-10-d
(REF)
8A4-L1-d
-L2-d
-L3-e
-L4-e
-HR-14-e
-HR-16-u
-HR-29-e
-HR-30-d
-MT-1-u
8A4-MT-10-d
(REF)
8A4-HR-4-e
8A4-HR-16-u
(REF)
8A4-HR-13-d
8A4-HR-15-f
(REF)
SPLICE AREA (REF)
E6652, E6653
LDW390-21821 (EMI C) REF
(HEATER SYSTEM 1)
FOR CONTINUATION SEE SH. 9.00 ZONE 37-B

LDW280-52360-1 INSTL.
VIEW LOOKING DOWN - AFT EQUIP BAY.
CLUSTERS II (8A4) & III (8A3)

02/03 NAS 9-1100

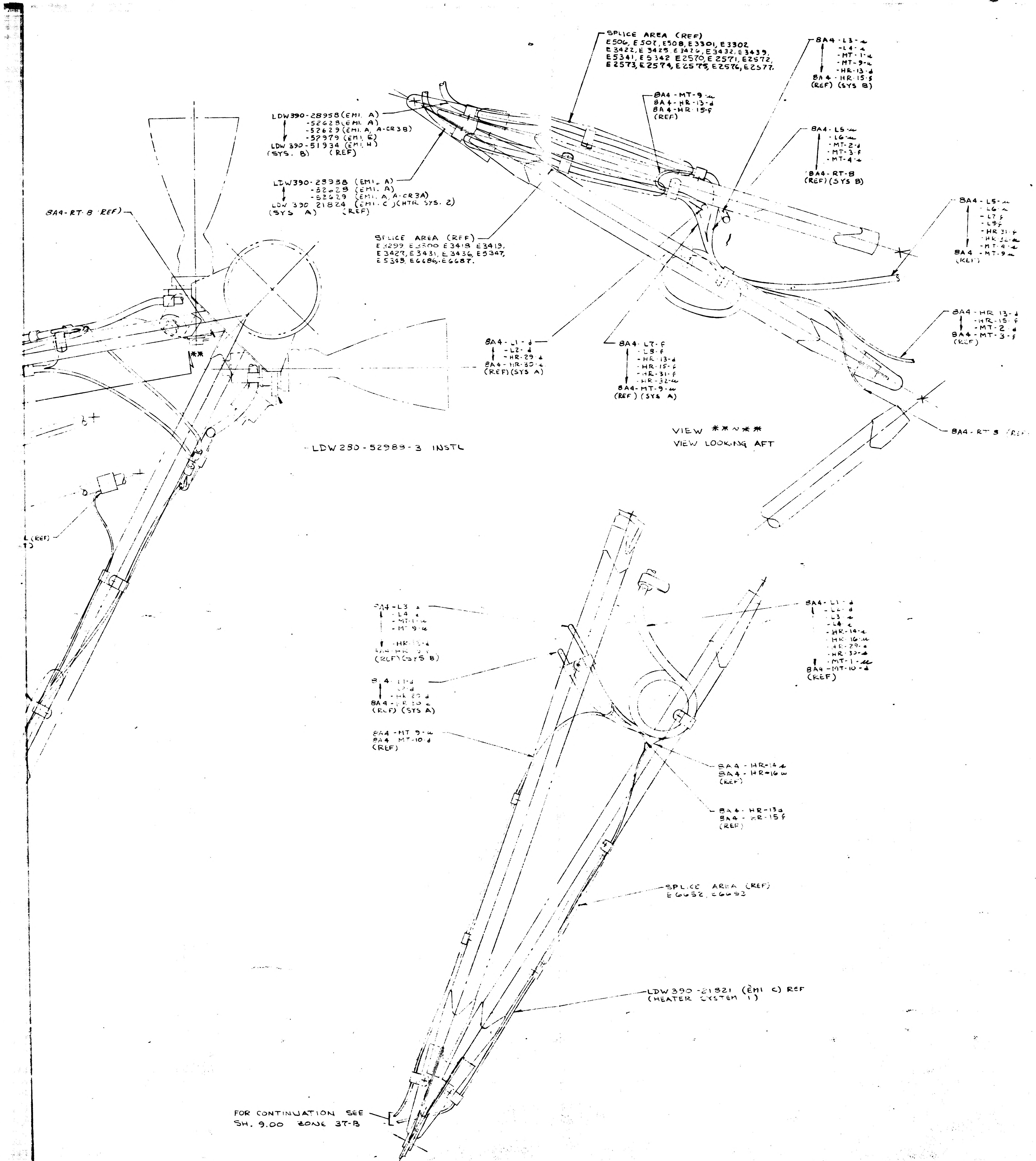
SPLICE AREA (REF)
E506, E507, E508, E3301, E3302
E3422, E3425, E3426, E3432, E3439,
E5341, E5342 E2570, E2571, E2572,
E2573, E2574, E2575, E2576, E2577.
8A4-L3-
-L4-
-MT-1-
-MT-9-
-HR-13-d
8A4-HR-15-f
(REF) (SYS B)
8A4-MT-9-
8A4-HR-13-d
8A4-HR-15-f
(REF)
LDW390-28958 (EMI. A)
-52628 (EMI. A)
-52629 (EMI. A, A-CR3B)
-57979 (EMI. E)
LDW 390-51934 (EMI. H)
(SYS. B) (REF)
8A4-L5-
-L6-
-MT-2-d
-MT-3-f
-MT-4-
8A4-RT-8
(REF) (SYS B)
LDW390-28938 (EMI. A)
-52628 (EMI. A)
-52629 (EMI. A, A-CR3A)
LDW 390 21824 (EMI. C) (HTR SYS. 2)
(SYS A) (REF)
8A4-RT-8 (REF)
SPLICE AREA (REF)
E3299 E3300 E3418 E3419,
E3427, E3431, E3436, E5347,
E5348, E6686, E6687.
8A4-L5-
-L6-
-L7 f
-L8 f
-HR 31-f
-HR 32-
-MT-4-
8A4-MT-9-
(REF)
8A4-HR 13-d
-HR-15-f
-MT-2-d
8A4-MT-3-f
(REF)
8A4-L1-d
-L2-d
-HR-29-d
8A4-HR-30-
(REF) (SYS A)
8A4-L7-f
-L8-f
-HR-13-d
-HR-15-f
-HR-31-f
-HR-32-
8A4-MT-9-
(REF) (SYS A)
8A4-RT-8 (REF)
(REF)
8A4-L3-
-L4-
-MT-1-
-MT-9-
-HR-13-d
8A4-HR-15-f
(REF) (SYS B)
8A4-L1-d
-L2-d
-HR-29-d
8A4-HR-30-
(REF) (STS A)
8A4-MT-9-
8A4-MT-10-d
(REF)
8A4-L1-d
-L2-d
-L3-
-L4-
-HR-14-
-HR-16-
-HR-29-
-HR-30-
-MT-1-
8A4-MT-10-d
(REF)
8A4-HR-14
8A4-HR-16
(REF)
8A4-HR-13d
8A4-HR-15f
(REF)
SPLICE AREA (REF)
E6652, E6653
LDW390-21821 (EMI C) REF
(HEATER SYSTEM 1)
FOR CONTINUATION SEE
SH. 9.00 ZONE 37-B

VIEW **~**
VIEW LOOKING AFT

LDW280-52988-3 INSTL

PRINTING INFO ONLY
FULL SIZE SHEET AREA (36 X 110) 27.5 SQ.FT.
1/2 SIZE SHEET AREA (1/4 OF FULL) 7 SQ.FT.

DRAWING REVISION & DESCRIPTION OF EO.
ON -1 INSTL.
1- DELETE SH. 7.00
2- ADD SH. *** (AS SHOWN IN THE F/D OF THIS EO)
3- SH 2.00 ADD LDW280-52988-3 & 5 1 EACH.
4- SH 4.00: ZONE 3-C; TO CLUSTER II (8A4) SEE SH ***, ZONE --, WAS SEE SH 7.00 ZONE 24-B
ZONE 6-C; TO CLUSTER III (8A3) SEE SH *** ZONE --, WAS SEE SH 7.00 ZONE 24 B

5- SH 6.00 ZONE 17-B TO CLUSTER II (8A4) SEE SH ***, ZONE --, WAS SEE SH. 7.00 ZONE 24 B.
ZONE 21-B TO CLUSTER III (8A3) SEE SH *** ZONE --, WAS SEE SH. 7.00 ZONE 24-B.
6- SH 9.00 ZONE 37-B LDW390-52858 (EMI H) REF) WAS LDW390-52858 (P909B-8A3, 8MT21, 22) LDW390-52517 (P111B-8MT19, 8MT20, 23, 24) LDW390-21821 (EMI C) HEATER SYSTEM 1)(REF) WAS LDW390-52905 (P102B-8MT-19, 20 23, 24) LDW390-52933 (P98A-8A3)
ADD:- FOR CONTINUATION SEE SH ***
ZONE --
ZONE 39-B LDW390-52858 (EMI H) (REF) WAS LDW390-52517 (P111B-8MT26, 27, 29, 30). LDW390-52858 (8MT-25, 8MT-28, 8A4-P909B). LDW390-21821 (EMI C) (HEATER SYSTEM 1) (REF) WAS LDW390-52933 (P98A-8A4) LDW390-52905 (P102B-8MT26, 27, 29, 30).
ADD:- FOR CONTINUATION SEE SH.***
ZONE --

03/03 NAS 9-1100

-, **-** USE NEXT AVAILABLE SECTION LETTERS
*** USE NEXT AVAILABLE SHEET NUMBER

ALL CLAMPS ARE GC500AA IN ACCORDANCE WITH LPC 290-23

DETAIL SPEC REQD ☐ CLASS II ENGRG CHG ☐ CLASS I ENGRG CHG ✓ LCD 2229
CONTROL INFO NO. LDW280-9595

REASON FOR EO: TO PROVIDE NEW CABLE ROUTING TO MATCH RCS CLUSTER WIRING INSTL. (LDW280-52988)

DESCRIPTION OF EO: SEE "DESCRIPTION OF EO" IN F/D.

GRUMMAN EO RELEASE

MODEL	PROCURING ACT. NO.	GAEC UNIT NO.	SUB CONTR UNIT NO.
LM		LM2 (32)	

DRAWING REVISION REQD: REVISE DWG ✓ RECORD EO
DISPOSITION OF PARTS: REWORK ✓ SCRAP
BY / DATE: VDI; SUPPORT; RELIAB GROUP; GROUP LEADER 11-1-67; STRESS GROUP 11-1; LIAISON ENGRG; PROJ ENGR 11/1/67; 11-8-67

PRIORITY: C
DRAWING TITLE: LINES INSTALLATION ~ ELECTRONIC ~ A/S ~ AFT EQUIP. BAY
ENGINEERING ORDER
DRAWING NO. LDW280-52360
EO NO. E2

10/27/67
ISSUED BY C.H. COHEN X1392 SECTION EQUIP LINES GROUP NO. 332 PL 25
CODE IDENT NO. 26512
GRUMMAN AIRCRAFT ENGINEERING CORP.
BETHPAGE, L. I., N. Y.

ENG 32.3 REV 3-65

GRUMMAN AIRCRAFT ENGINEERING CORP.
CODE IDENT NO. 26512
ENGINEERING ORDER

ENG 32.2 REV 3-65

DWG. NO. LDW280-52360	EO NO. E3
CONTROL INFO NO. LDW280B0186	

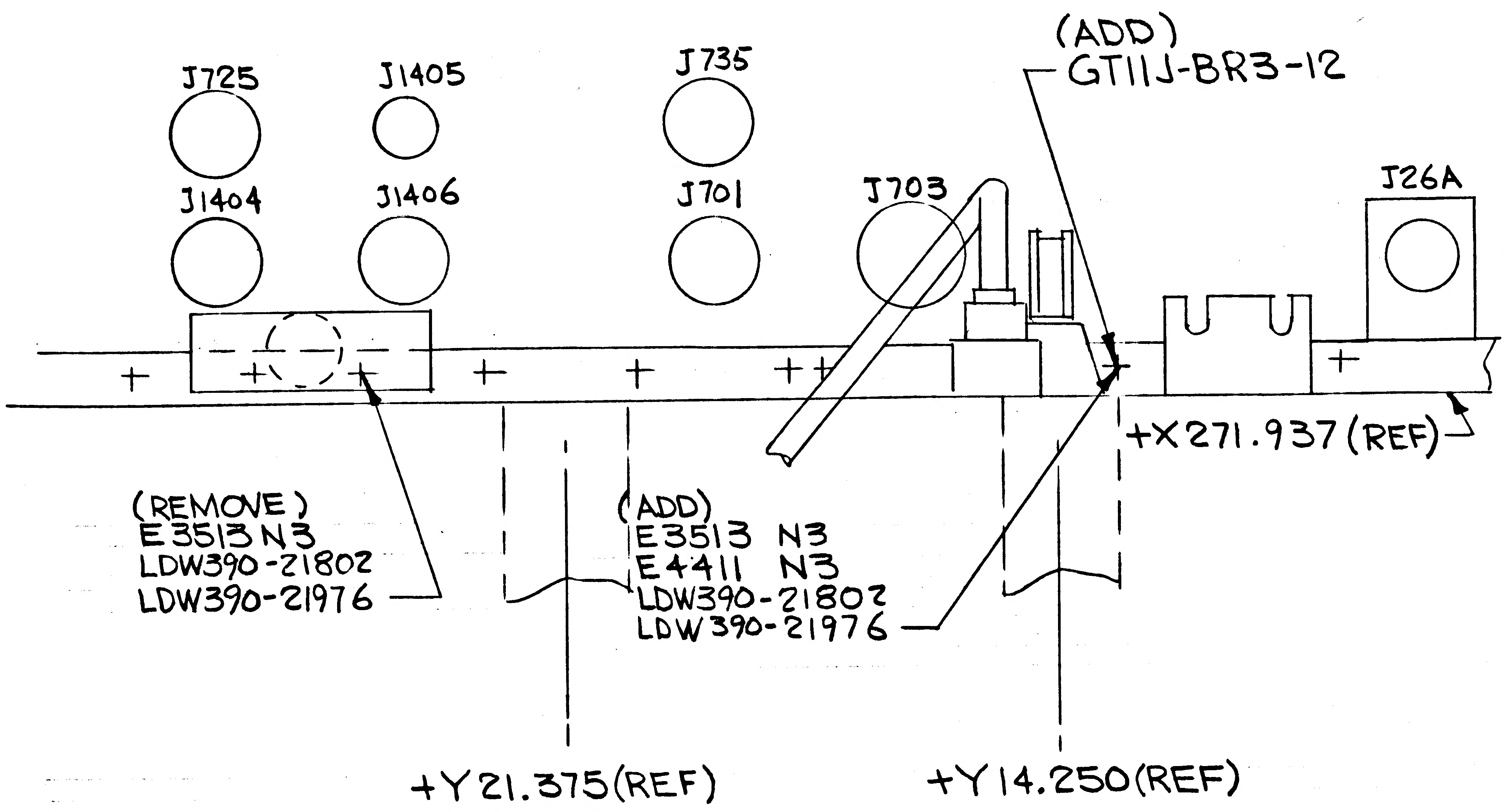

(ADD)
GT11J-BR3-12
J725
J1405
J735
J1404
J1406
J701
J703
J26A
+X271.937 (REF)
(REMOVE)
E3513N3
LDW390-21802
LDW390-21976
(ADD)
E3513 N3
E4411 N3
LDW390-21802
LDW390-21976
+Y21.375(REF)
+Y14.250(REF)

AFT EQUIP. BAY
VIEW LKG AFT
SHEET 4.00 (ZONE 5C)
LDW280-52360-1INSTL

01
NAS 9-1100

DETAIL SPEC REQ ☐	CL II ENGRG CHG ☑	CL I ENGRG CHG ☐	LCD 2270			(5)
REASON FOR EO: TO LOCATE N3 GROUND	DESCRIPTION OF EO: ON-1 INSTL ADDED E4411 N3GROUND & GT11J-BR3-12 RELOCATED E3513 N3 GROUND.					GAEC EO RELEASE: JC 11/9/67

MODEL	EFFECTIVITY: PROCURING ACTIVITY NO.	GAEC UNIT NO.	SUB CONTR UNIT NO.
LM		LM-2 (32)	

DRAWING CHANGE REQD		DISPOSITION OF PARTS									
				APPROVED BY				JW		MB	
				DATE	11/9/67			11/09/67	11/9/67	11/9/67	11/9/67
✓ REVISE DWG	RECORD EO	✓ REWORK	SCRAP	E	VDI	SUPPORT	RELIAB. GROUP	GROUP LEADER	STRESS GROUP	LIAISON ENGRG	PROJ ENGRG

PRIORITY	DRAWING TITLE	DRAWING NO.	EO NO.
C	LINES INSTL ELECTRONICS ASCENT STAGE ~ AFT EQUIP. BAY	LDW280-52360	E3

11/6
ISSUED BY D. CAROLEO EX: 1153 SECTION EQUIP LINES/VDI GROUP NO. 332 PL 25

B

ENG 32.2 REV 3-65

GRUMMAN AIRCRAFT ENGINEERING CORP.
CODE IDENT NO. 26512
ENGINEERING ORDER

DWG NO. LDW280-52360
EO NO. E4
CONTROL INFO NO. LDW280B0502

DELETE
LDW390-52945(P1139 TO P112B)H
LDW390-21494(P1139 TO E2294, E2295 & J114)H
(REF)

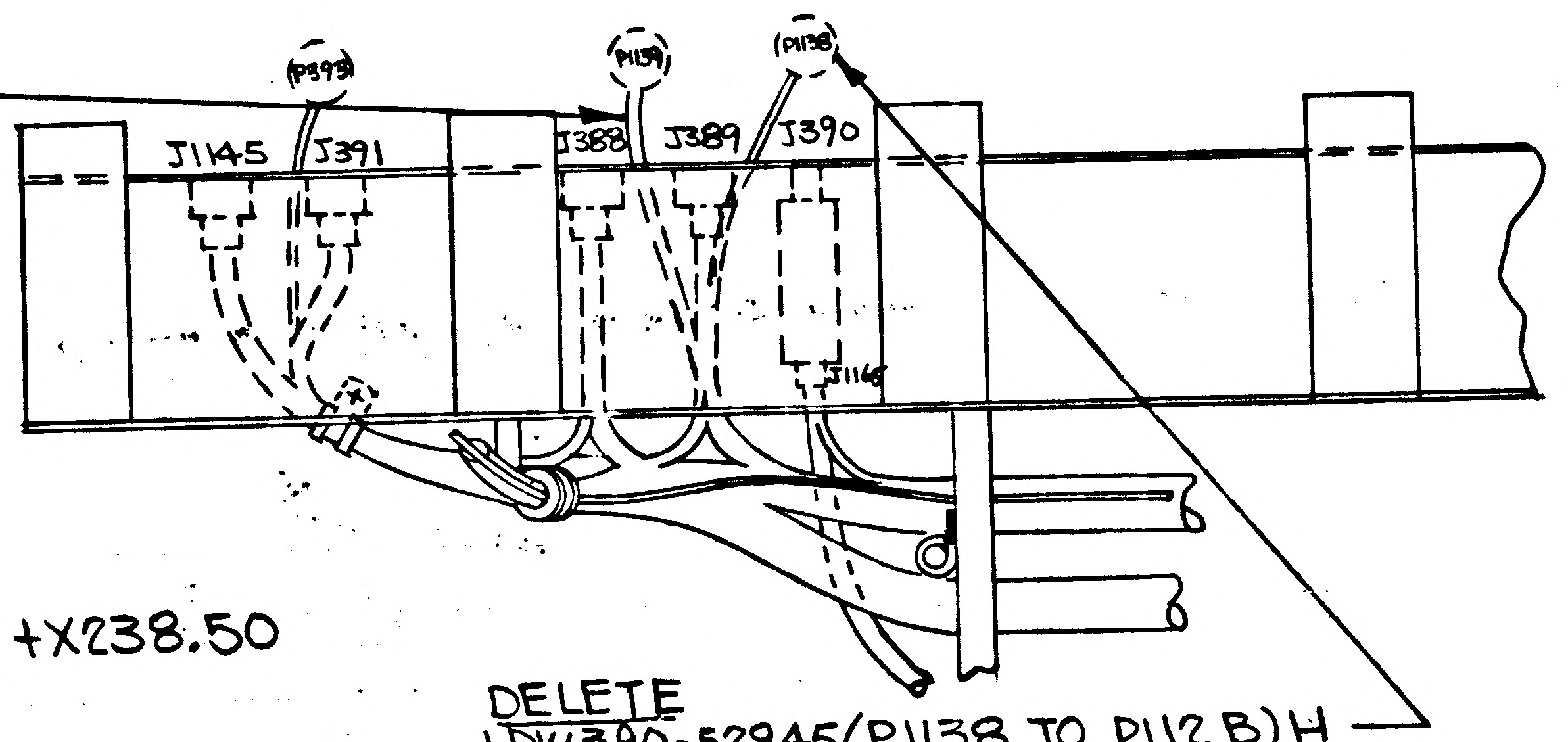

VIEW E-E
AFT EQUIP. BAY ECS LKG DN +X238.50
SH 5.00 (ZONE 13 B)

DELETE
LDW390-52945(P1138 TO P112B)H
LDW390-21492(P1138 TO J115) H,E
(REF)

REMOVE
LDW390- 21494 (J114 TO P1139) E,H
(REF)

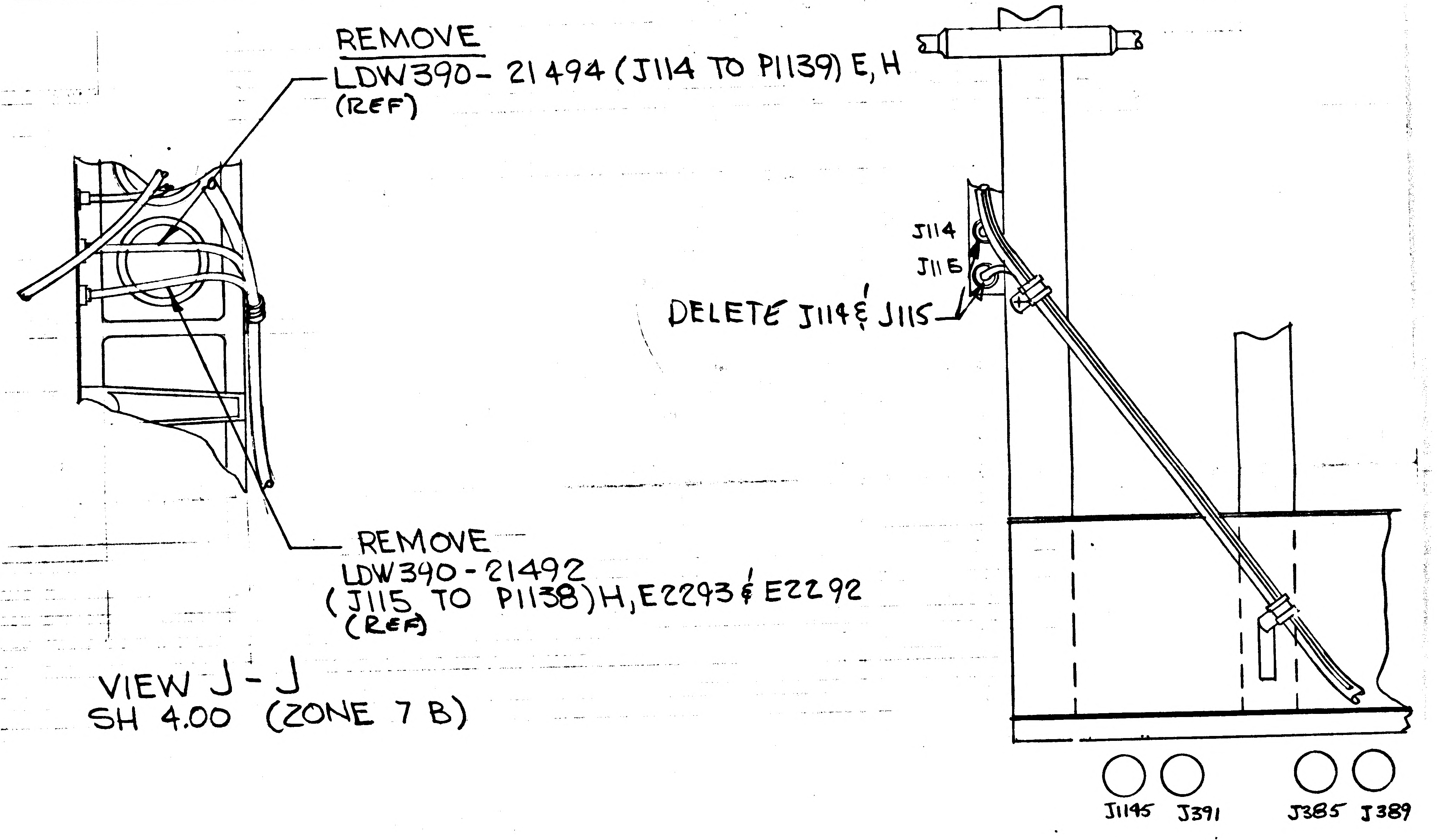

DELETE J114 & J115

REMOVE
LDW390-21492
(J115 TO P1138)H,E2293 & E2292
(REF)

VIEW J-J
SH 4.00 (ZONE 7 B)

DESCRIPTION OF EO.
ON -1 INSTL REMOVED LDW390-21492(J115 TO P1138)
H,E2243 & E2292, REMOVED LDW390-21494(J114
TO P1139)E,H REF. CALLOUTS

DETAIL SPEC REQ		CL II ENGRG CHG		CL I ENGRG CHG	✓

LCD 2223 CCA 745 (5)

REASON FOR EO: TO REMOVE ITEMS NOT REQUIRED FOR UNMANNED FLIGHT

DESCRIPTION OF EO: NOTED ABOVE

Ⓡ GAEC EO RELEASE: JM 12-5-7

MODEL	EFFECTIVITY: PROCURING ACTIVITY NO.	GAEC UNIT NO.	SUB CONTR UNIT NO.
LM		LM-2(32)	

DRAWING CHANGE REQD: REVISE DWG ✓ RECORD EO

DISPOSITION OF PARTS: REWORK ✓ SCRAP

APPROVED BY	JWS			JW					
DATE	12/1/67			12/1/67	12/1/67		12/1/67	12-4-67
E	VDI	SUPPORT	RELIAB. GROUP	GROUP LEADER	STRESS GROUP	LIAISON ENGRG	PROJ ENGRG	

PRIORITY: C

DRAWING TITLE: LINES INSTALLATION ELECTRONICS ASCENT STAGE AFT EQUIP. BAY ECS

DRAWING NO. LDW280-52360

EO NO. E4

12-12-67
ISSUED BY DAN CAROLEO EX: 1153

SECTION EQUIP. LINES / VDI

GROUP NO. 332

PL 25

0 1

NAS 9-1100

ENG 32.1 REV 3-65

GRUMMAN AIRCRAFT ENGINEERING CORP.
CODE IDENT NO. 26512

ENGINEERING ORDER

DWG. NO LDW280-52360
EO NO. E5
CONTROL INFO NO. LM-5-17606

ON-1 F/D
ZONE 6-C

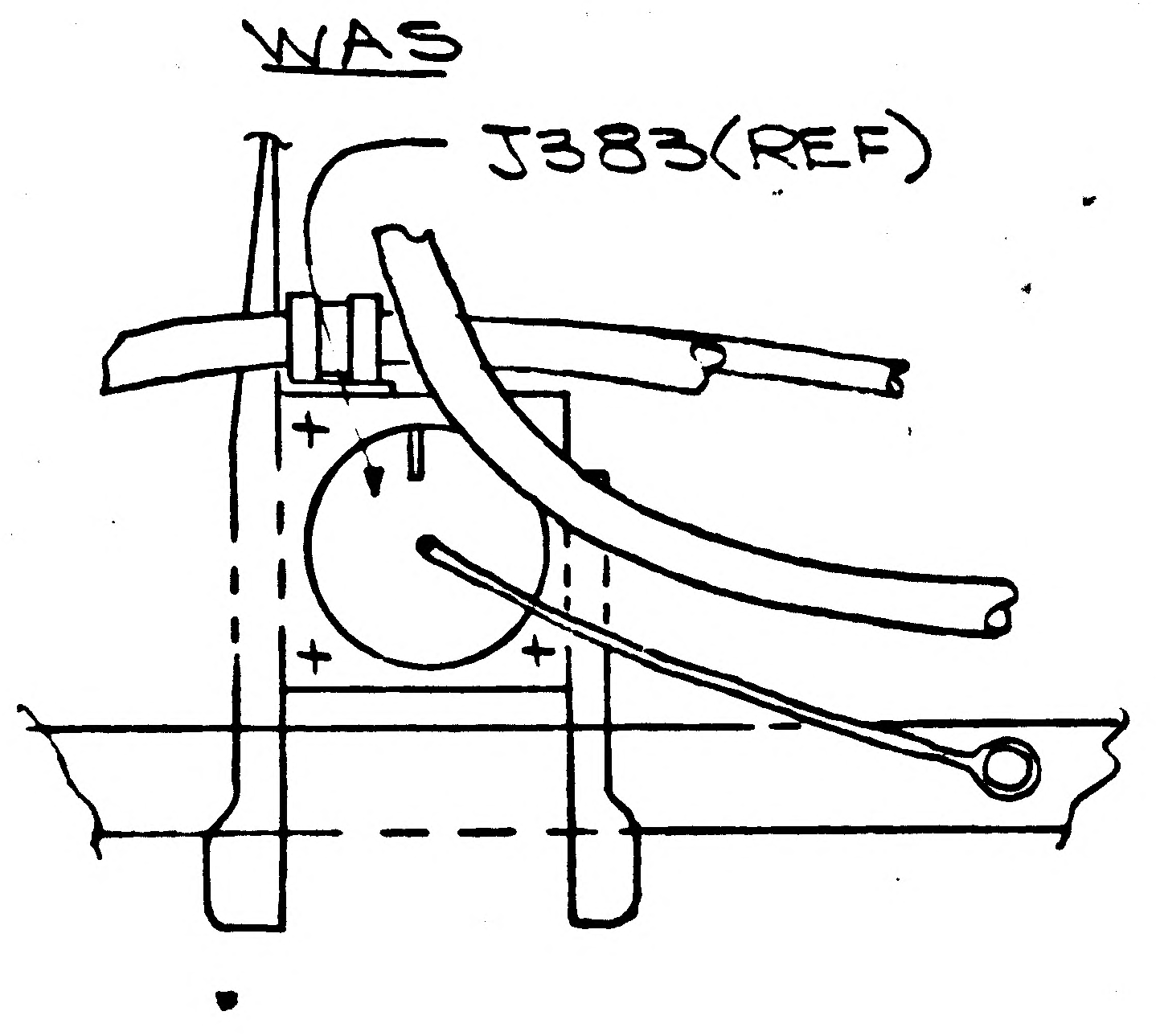

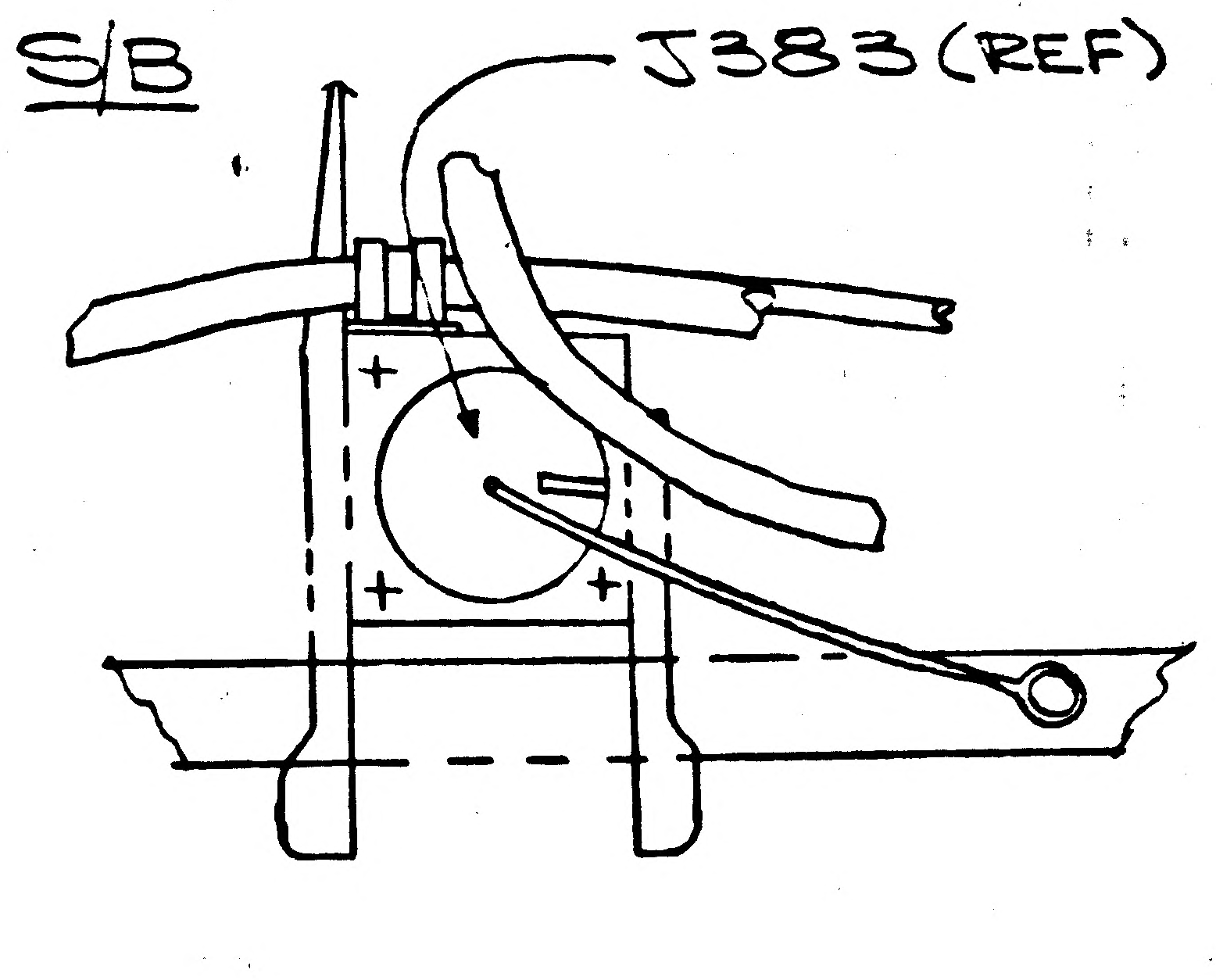

THIS IS AN ORIGINAL E.O.

RELEASED BY LIAISON ⑤

DETAIL SPEC REQ	☐	CL II ENGRG CHG	☑	CL I ENGRG CHG	☐

REASON FOR EO: ON J383 GRUMMAN AND VENDOR DWG'S DO NOT AGREE

DESCRIPTION OF EO: ON-1 F/D CHANGED KEYWAY ON J383 3 O'CLOCK WAS 12 O'CLOCK

GAEC EO RELEASE: ⑫ JK

MODEL	PROCURING ACTIVITY NO.	GAEC UNIT NO.	SUB CONTR UNIT NO.
LM		LM-2 (32)	

DRAWING CHANGE REQD		DISPOSITION OF PARTS										
REVISE DWG	RECORD EO	REWORK	SCRAP	APPROVED BY	JHS			=	JFS	CR	JLP	
✓		✓		DATE	12/21/67				12-14-67	12-14-67	12/21/67	12/16/67
					VDI	SUPPORT	RELIAB. GROUP	GROUP LEADER	STRESS GROUP	LIAISON ENGRG	PROJ ENGRG	GOVT

PRIORITY: C

DRAWING TITLE: LINES INSTALLATION ELECTRONIC ASCENT STAGE-AFT. EQUIP. BAY

DRAWING NO.: LDW280-52360

EO NO.: E5

ISSUED BY LIAISON (H. BABCOCK) x9491 SECTION V.D.I. GROUP NO. 280 PL 25

01

NAS 9-1100

RELEASED BY LMSC

GRUMMAN AIRCRAFT ENGINEERING CORP.
CODE IDENT NO. 26512
ENGINEERING ORDER

ENG 32.1 REV 3-65

DWG. NO. LDW280-52360
EO NO. E6
CONTROL INFO NO. LM5-13752

ADD TO NOTES(USE NEXT AVAILABLE NOTE NUMBER *)
* ALL RECEPTACLES MOUNTED IN ACCORDANCE WITH THIS DRAWING ARE TO HAVE KEYWAYS POSITIONED IN THE +X OR +Z DIRECTION, UNLESS OTHERWISE NOTED.

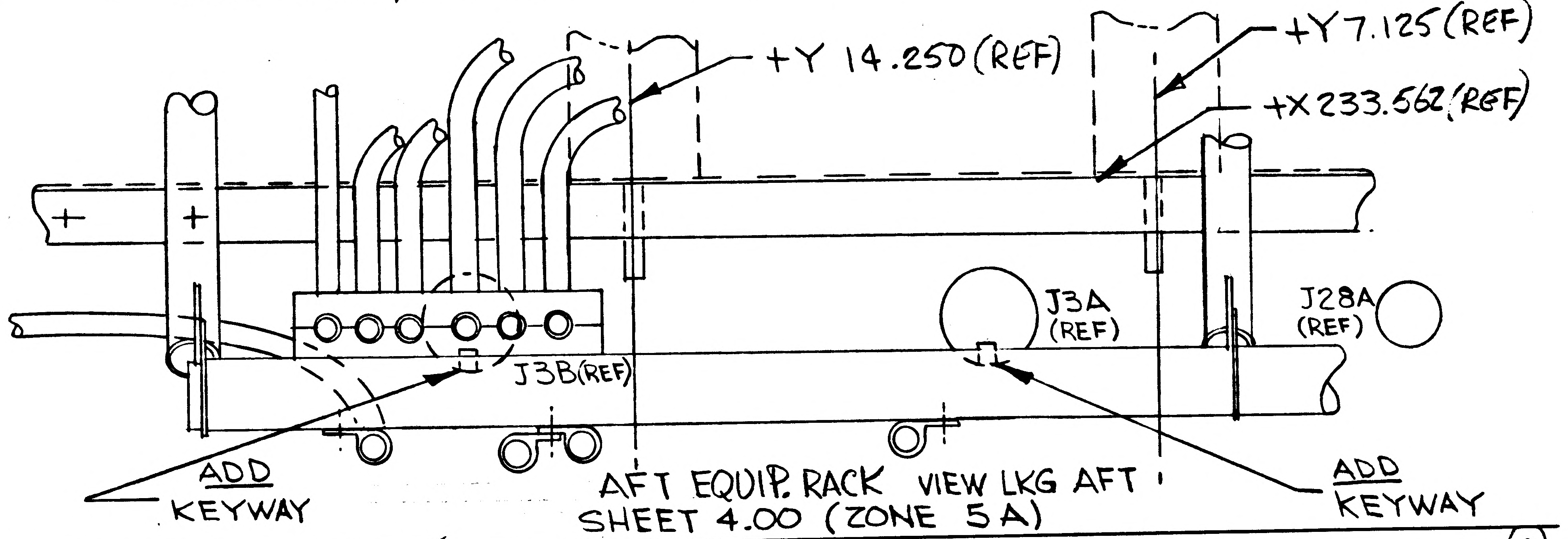

AFT EQUIP. RACK VIEW LKG AFT
SHEET 4.00 (ZONE 5A)

DETAIL SPEC REQ ☐ CL II ENGRG CHG ☑ CL I ENGRG CHG ☐

(5)

REASON FOR EO: TO ORIENT KEYWAYS

DESCRIPTION OF EO: ON-INSTL ORIENTED KEYWAYS FOR J3A & J3B, ADDED NOTE *

GAEC EO RELEASE: JK

MODEL	PROCURING ACTIVITY NO.	GAEC UNIT NO.	SUB CONTR UNIT NO.
LM		LM-2(32)	

DRAWING CHANGE REQD: REVISE DWG ✓ RECORD EO
DISPOSITION OF PARTS: REWORK ✓ SCRAP

	VDI	SUPPORT	RELIAB. GROUP	GROUP LEADER	STRESS GROUP	LIAISON ENGRG	PROJ ENGRG	~~GOVT~~
APPROVED BY	[illegible]			—	MBS	[illegible]	[illegible]	[illegible]
DATE	1/[illegible]/68				12/20/67	12-20-67	1/5/68	12-21-67

PRIORITY: C
DRAWING TITLE: LINES INSTL ELECTRONICS ASCENT STAGE - AFT EQUIP. BAY
DRAWING NO. LDW280-52360
EO NO. E6

ISSUED BY DAN CAROLEO EX:1153 SECTION EQUIP. LINES/VDI GROUP NO. 332 PL 5

01

NAS 9-1100

U

ENG 32.1 REV 3-65

GRUMMAN AIRCRAFT ENGINEERING CORP.
CODE IDENT NO. 26512
ENGINEERING ORDER

DWG NO LDW280-52360
EO NO. E7
CONTROL INFO NO. LDW280B1380

THIS E.O. CANCELS E.O. E4

DETAIL SPEC REQ ☐ CL II ENGRG CHG ☐ CL I ENGRG CHG ☑ LCD 2223 CCA 745 (5)

REASON FOR EO: TO REINSTALL ELECTRICAL WIRING

DESCRIPTION OF EO: CANCELED E.O. E4

GAEC EO RELEASE: JK 1/15/68

MODEL	PROCURING ACTIVITY NO.	GAEC UNIT NO.	SUB CONTR UNIT NO.
LM		LM-2 (32)	

DRAWING CHANGE REQD: REVISE DWG ✓ RECORD EO

DISPOSITION OF PARTS: REWORK ✓ SCRAP

APPROVED BY	Jap			J.W.B	CW		Jap	Botts
DATE	1/15/68			1/15/68	1-15-68		1/15/68	1-15-68
E	VDI	SUPPORT	RELIAB. GROUP	GROUP LEADER	STRESS GROUP	LIAISON ENGRG	PROJ ENGRG	~~GOVT~~

PRIORITY: C
DRAWING TITLE: LINES INSTL ELECTRONICS ASCENT STAGE - AFT EQUIP. BAY
DRAWING NO. LDW280-52360
EO NO. E7

12-20-68
ISSUED BY DAN CAROLEO EX: 1153 SECTION EQUIP. LINES / VDI GROUP NO. 332 PL 25

01 NAS 9-1100

ENG 32.1 REV 3-65

GRUMMAN AIRCRAFT ENGINEERING CORP.
CODE IDENT NO. 26512
ENGINEERING ORDER

DWG. NO. LDW280-52360
EO NO. F1
CONTROL INFO NO. LM-5-18016

ON-1
F/D SH. 8.00
ZONE 32-B

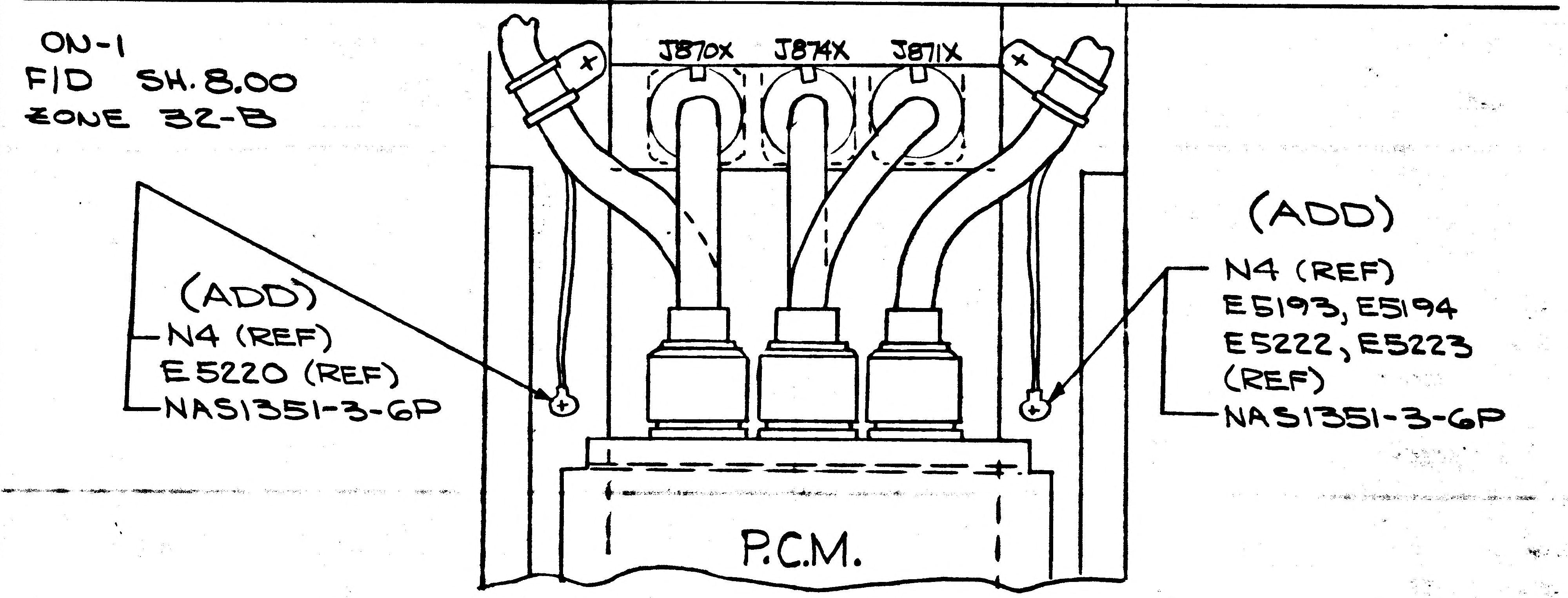
J870X
J874X
J871X
(ADD)
N4 (REF)
E5220 (REF)
NAS1351-3-6P
(ADD)
N4 (REF)
E5193, E5194
E5222, E5223
(REF)
NAS1351-3-6P
P.C.M.

ON-1 B/M
ADD (2) NAS1351-3-6P / BOLT

RELEASED BY LIAISON

DETAIL SPEC REQ ☐ CL II ENGRG CHG ☑ CL I ENGRG CHG ☐

(5)

REASON FOR EO: N4 GROUNDS NOT LOCATED

DESCRIPTION OF EO:
ON-1
F/D ADDED (2) NAS1351-3-6P AND GND CALLOUTS
B/M ADDED (2) NAS1351-3-6P

GAEC EO RELEASE: JK

MODEL	PROCURING ACTIVITY NO.	GAEC UNIT NO.	SUB CONTR UNIT NO.
LM		LM-2 (32)	

DRAWING CHANGE REQD: REVISE DWG ✓ RECORD EO
DISPOSITION OF PARTS: REWORK ✓ SCRAP

	VDI	SUPPORT	RELIAB. GROUP	GROUP LEADER	STRESS GROUP	LIAISON ENGRG	PROJ ENGRG	~~GOVT~~
APPROVED BY	JHS			—	DV	CR		
DATE	1/22/68			—	1/22	1-22-68	1/21/68	1/22/68

PRIORITY: C
DRAWING TITLE: LINES INSTALLATION - ELECTRONIC ASCENT STAGE - AFT EQUIPMENT BAY
DRAWING NO.: LDW280-52360
EO NO.: F1

ISSUED BY LIAISON (H. BABCOCK) 3491 SECTION VDI GROUP NO. 280 PL 25

01 NAS 9-1100

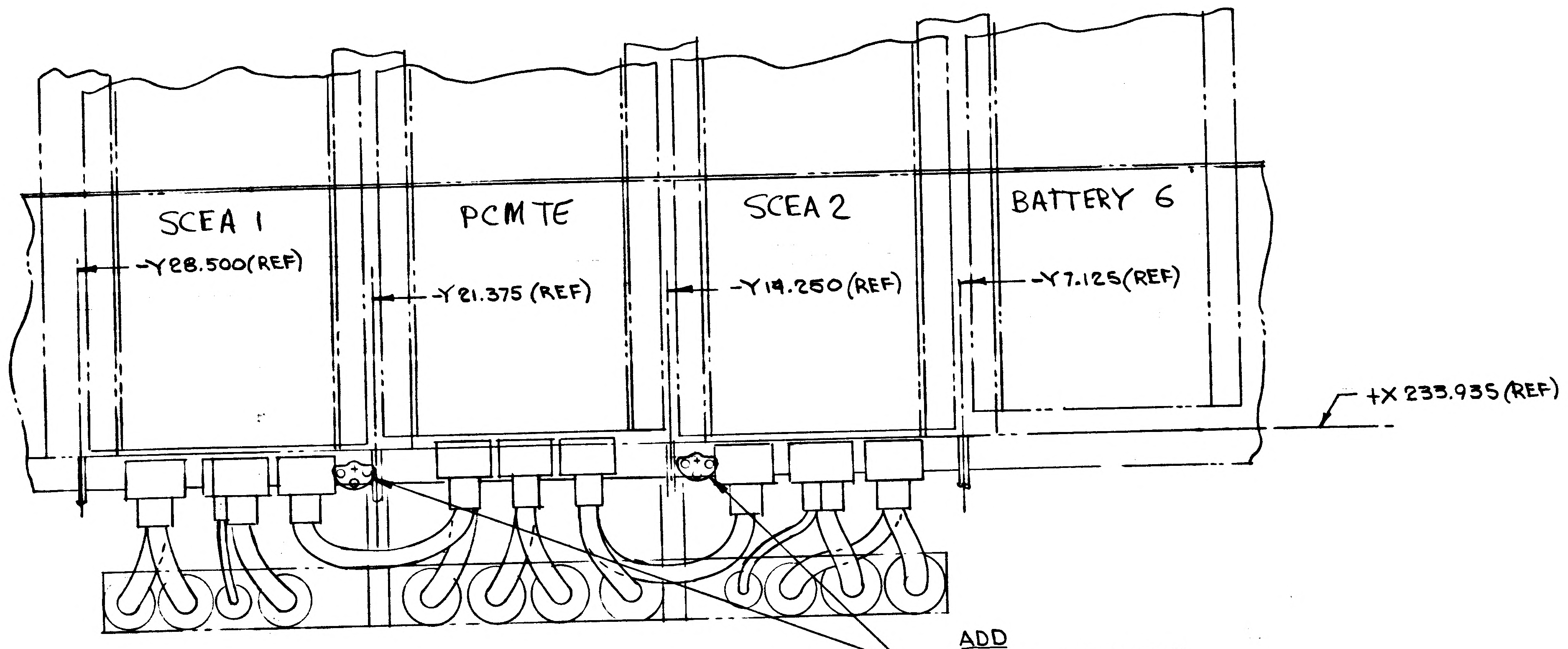
SCEA 1
PCM TE
SCEA 2
BATTERY 6
-Y28.500(REF)
-Y21.375 (REF)
-Y14.250 (REF)
-Y7.125(REF)
+X 233.935 (REF)

ADD
LDW390-52201-5 (1)
GB11J-08-5(1)
AN960D8(2)
MS21042L08(4)
AN960D8L (3)
(TYP. 2 PLACES)

VIEW LKG FWD-AFT ERA RACK
SH 8.00 (ZONE 32 A)

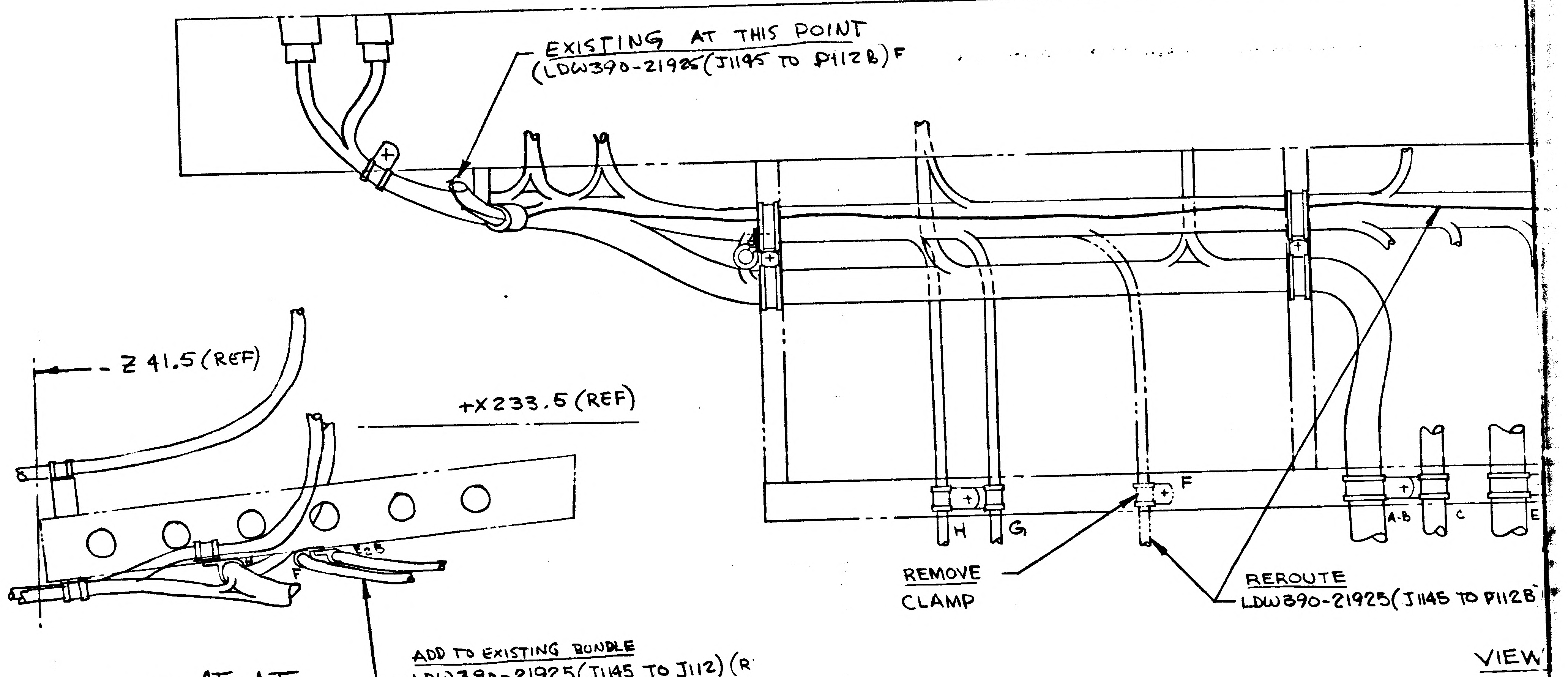
-Z 41.5 (REF)
+X 233.5 (REF)
E2B
F
H
G
A-B
C
E

EXISTING AT THIS POINT
(LDW390-21925(J1145 TO P112B) F

REMOVE
CLAMP

REROUTE
LDW390-21925(J1145 TO P112B

ADD TO EXISTING BUNDLE
LDW390-21925(J1145 TO J112) (R

VIEW AT-AT
LKG INBD ~ +Y11.5
SH 11.00 (ZONE 53A)

VIEW
SH

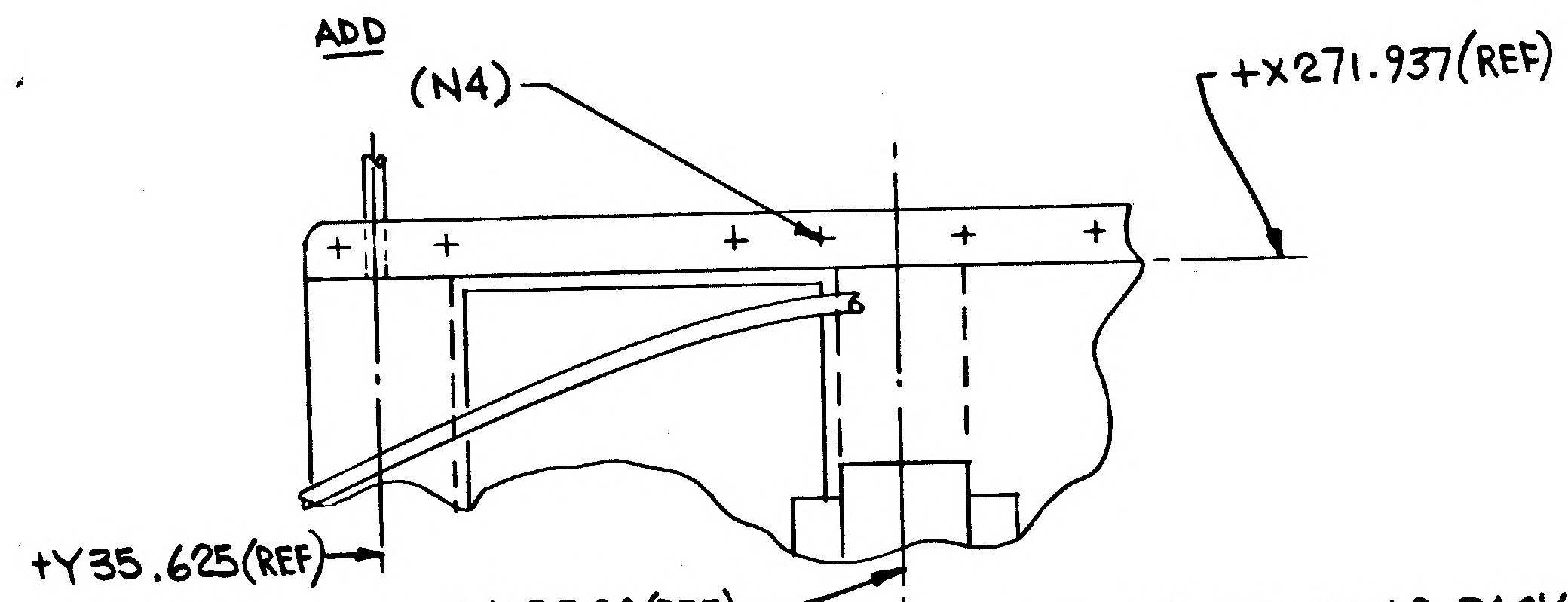
+X271.937(REF)
+Y35.625(REF)
+Y28.500(REF)

ADD
(N4)

VIEW LKG AFT~EQUIP RACK
SH 4.00 (ZONE 6C)

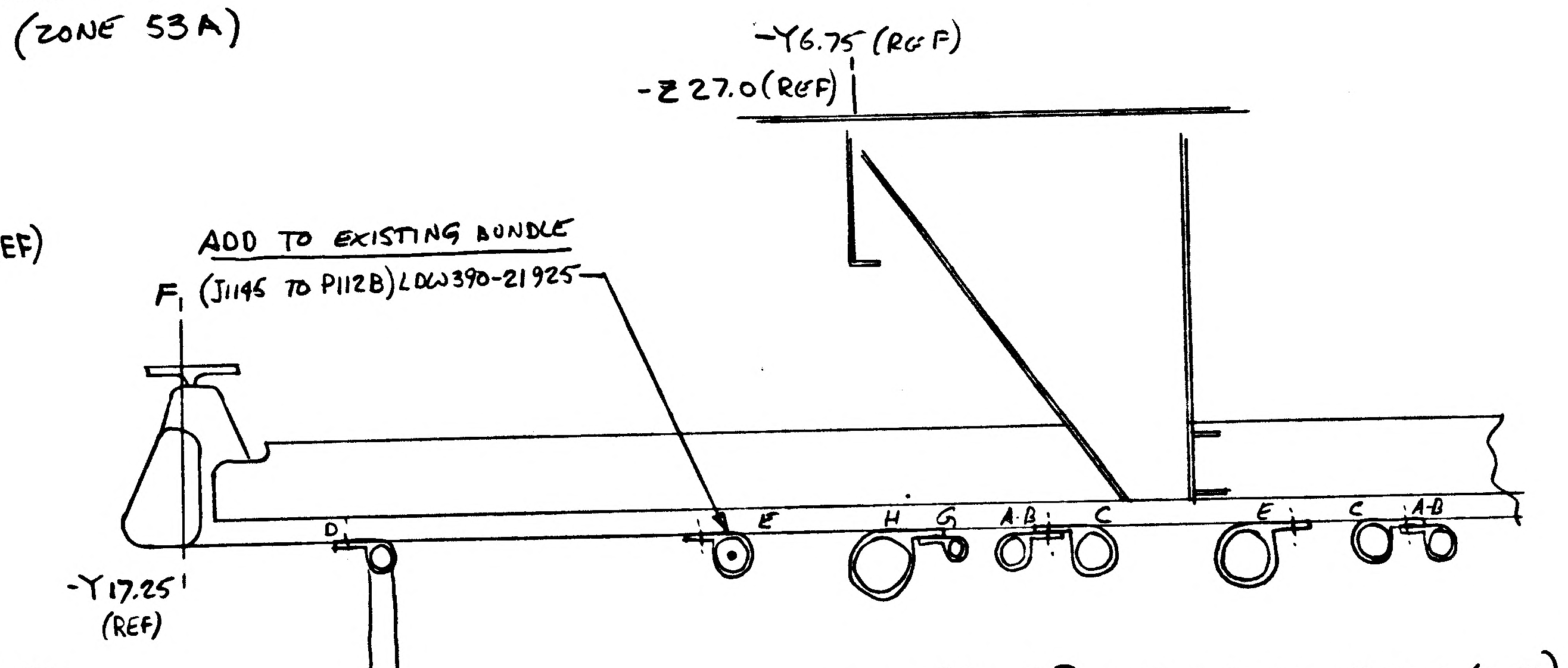
-Y6.75 (REF)
-Z 27.0(REF)
F
-Y17.25'
(REF)
D
E
H
G
A-B
C
E
C
A-B

ADD TO EXISTING BUNDLE
(J1145 TO P112B) LDW390-21925

VIEW AP-AP LKG DN AT X241.0 (REF)
SH 11.00 (ZONE 52 B)

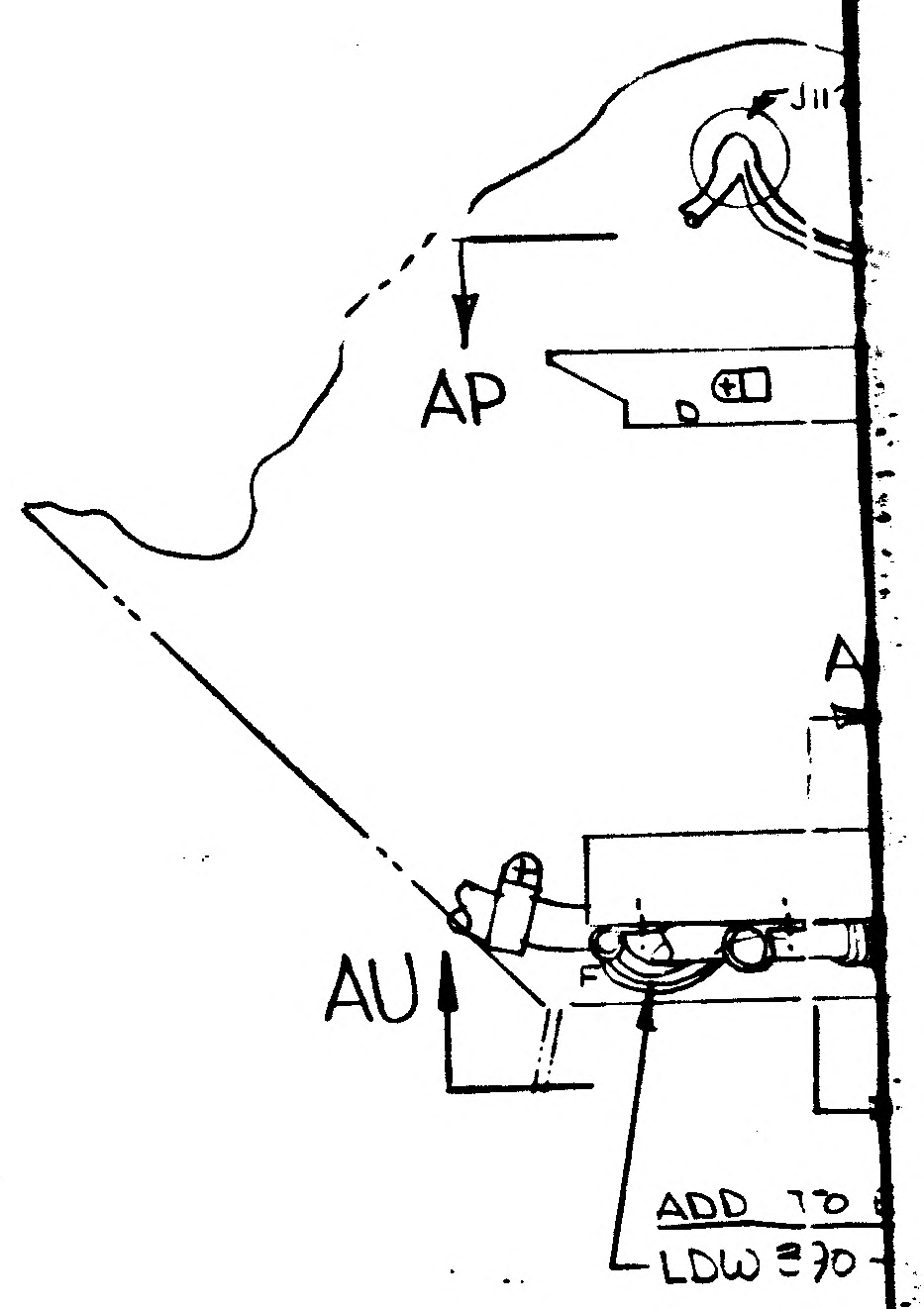

ADD TO
LDW 390-

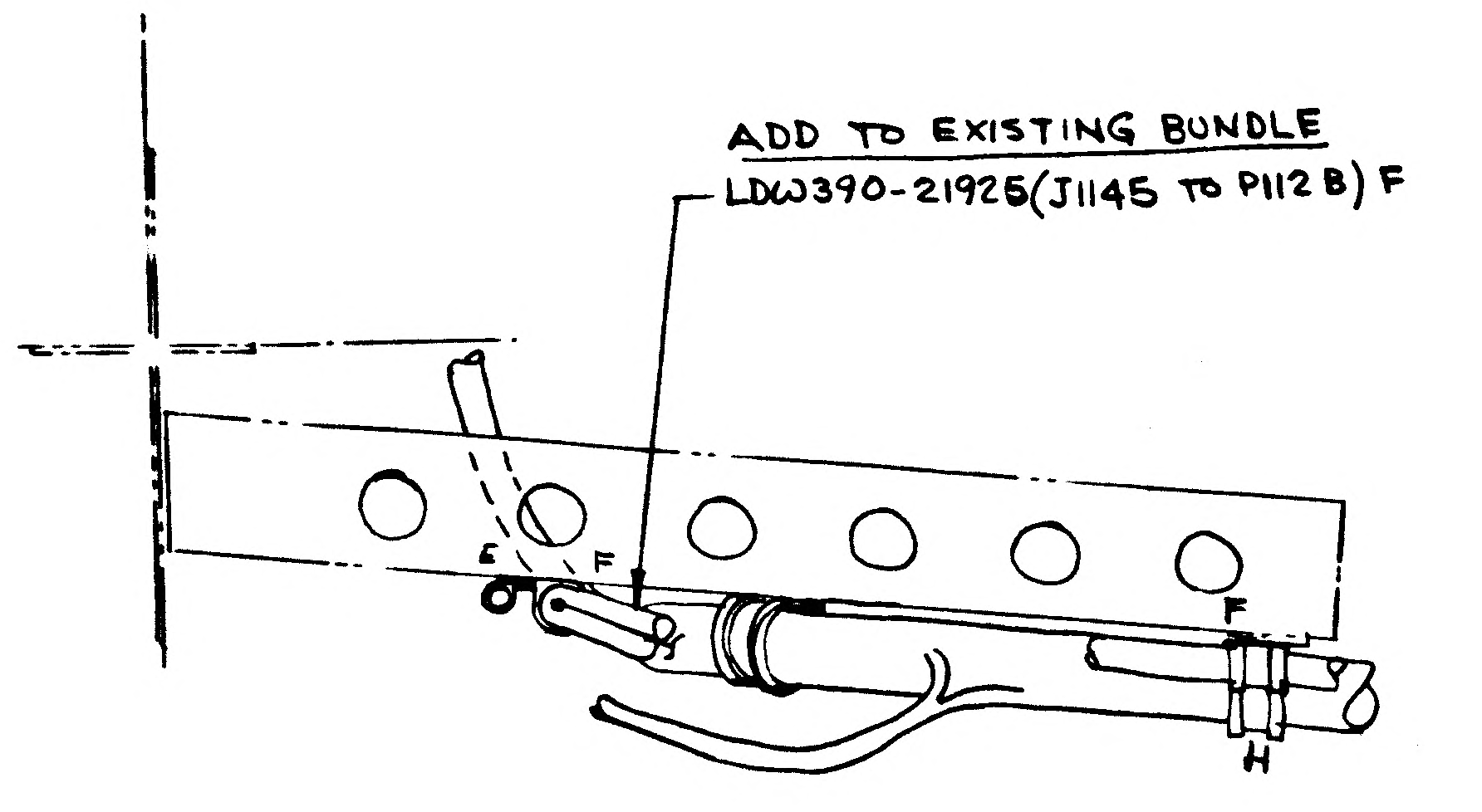

ADD TO EXISTING BUNDLE
LDW390-21925(J1145 TO P112B) F

VIEW AR-AR LKG INBD ~ -Y11.50
SH 11.00 (ZONE 55A)

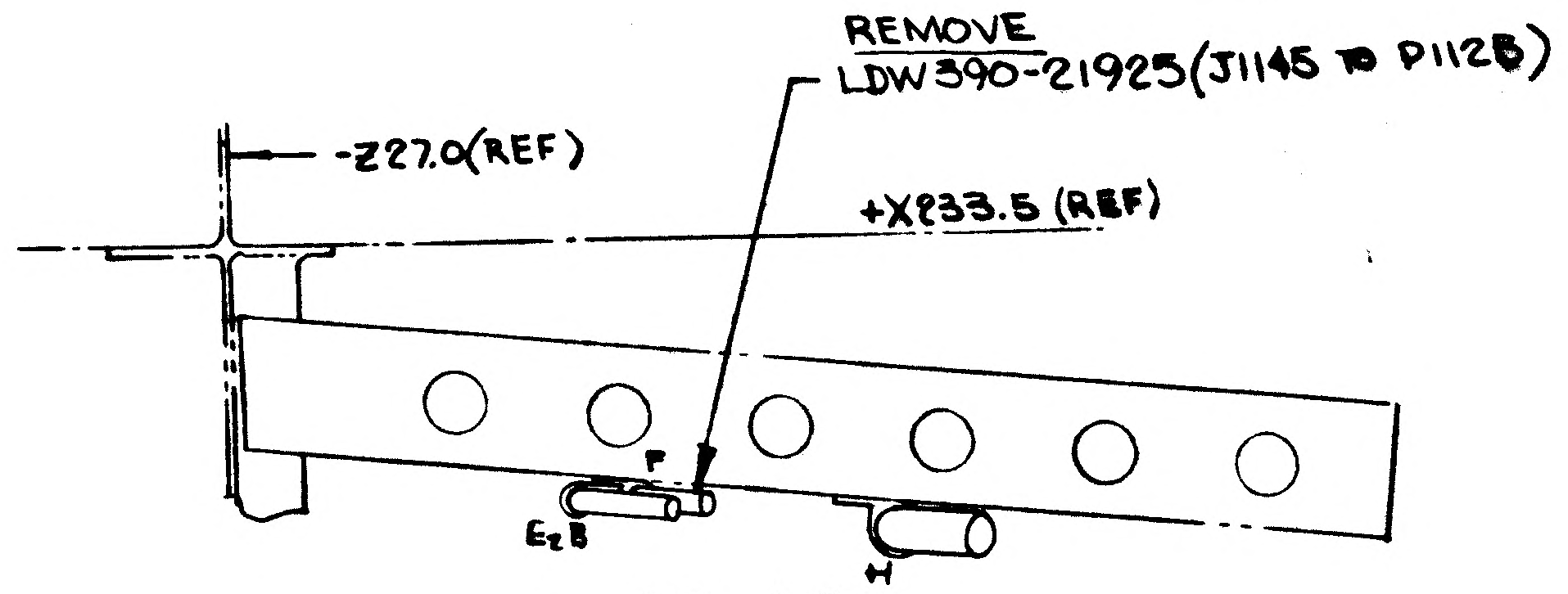
-Z27.0(REF)
+X233.5 (REF)
E2B
F
H

REMOVE
LDW390-21925(J1145 TO P112B)

VIEW AS-AS
LKG INBD LH~Y.0
SH 11:00 (ZONE 54 A)

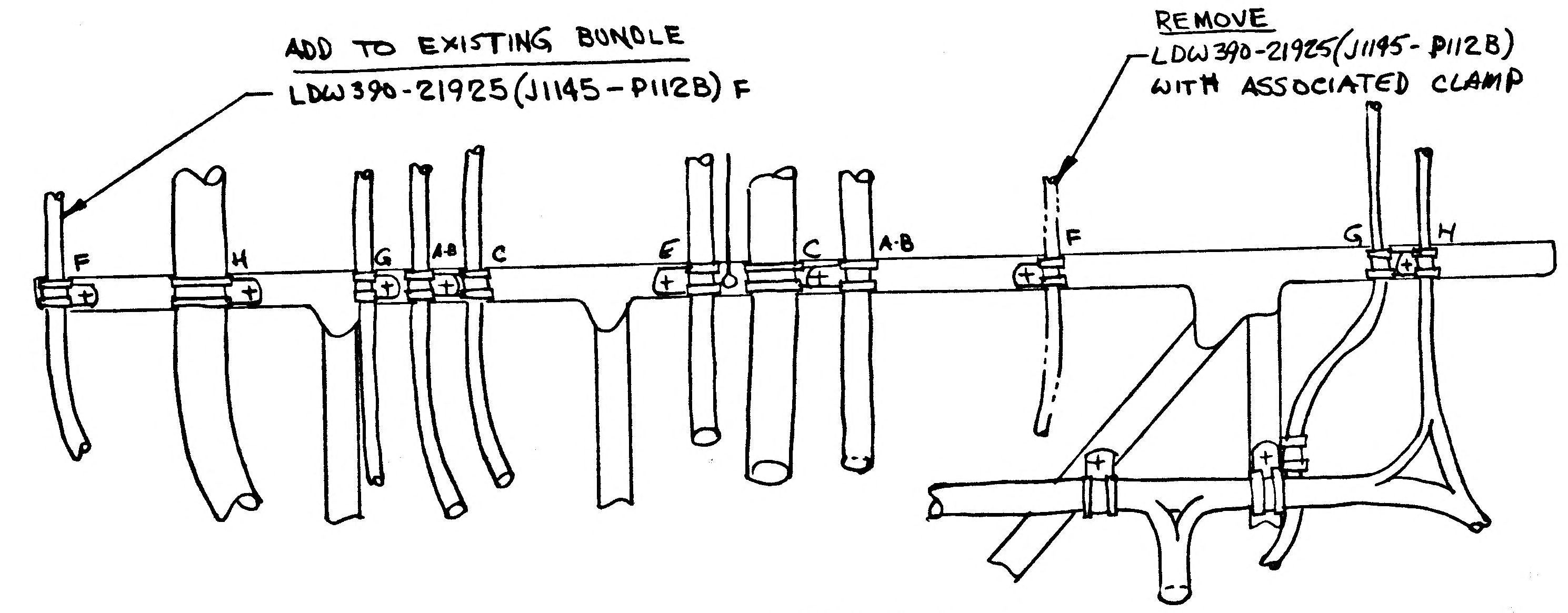
F
H
G
A-B
C
E
C
A-B
F
G
H

ADD TO EXISTING BUNDLE
LDW390-21925(J1145-P112B) F

REMOVE
LDW390-21925(J1145-P112B)
WITH ASSOCIATED CLAMP

VIEW AU-AU LKG UP~ +X228.0
SH 11.00 (ZONE 51 A)

01/02 NAS 9-1100

DETAIL SPEC REQD		CLASS II E

REASON F

TO PROVIDE SUPPORT
AND CORRECT

MODEL	PROCURING ACT. NO.	GA
LM		LM

1-19-68
ISSUED BY D. CAROLEO
SEC
ENG 32.3 REV 3-66

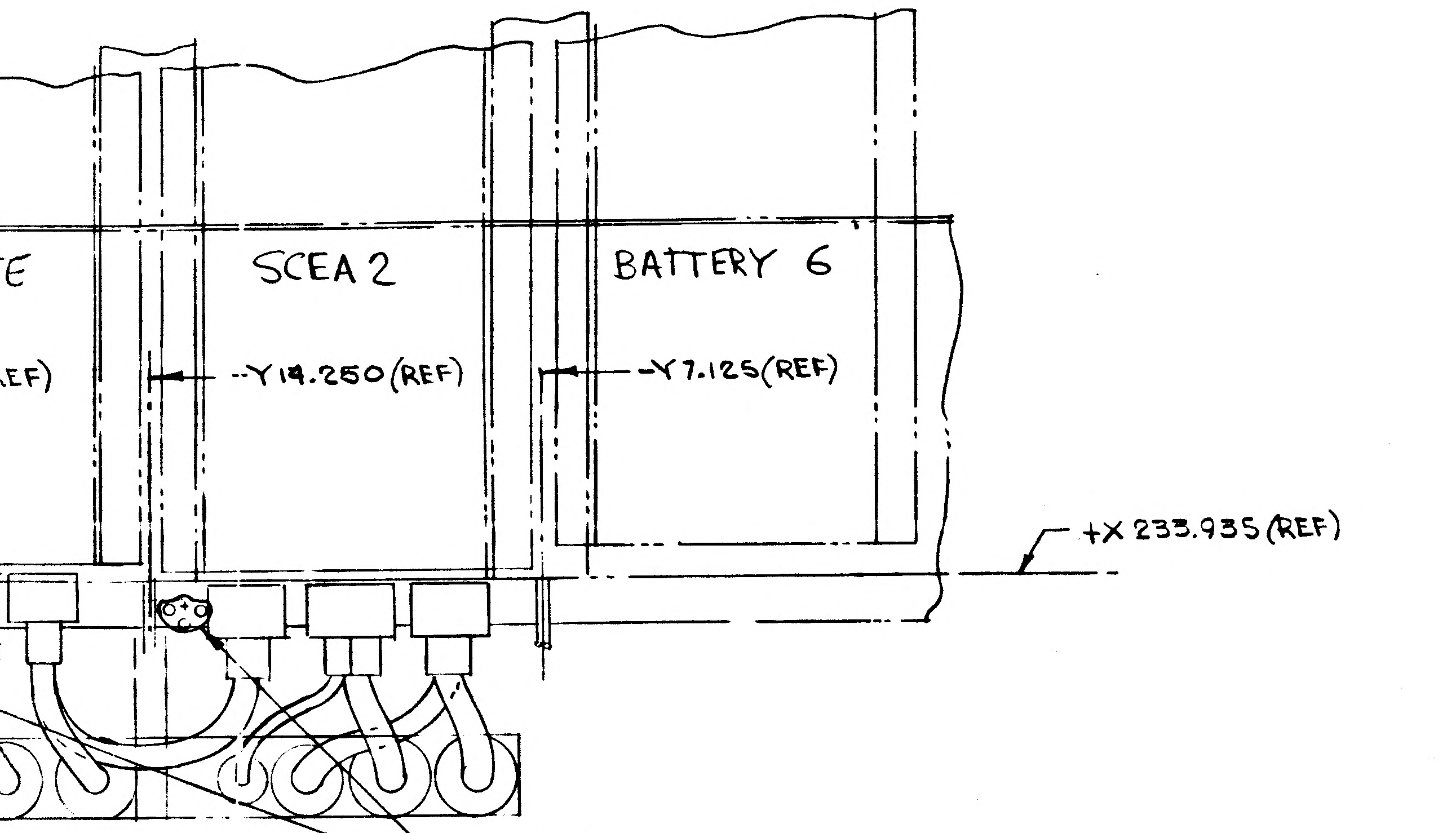
E
SCEA 2
BATTERY 6
EF)
-Y19.250(REF)
-Y7.125(REF)
+X233.935(REF)

ADD
LDW390-52201-5 (1)
GB11J-08-5(1)
AN960D8(2)
MS21042L08(4)
AN960D8L (3)
(TYP. 2 PLACES)

T ERA RACK
32 A)

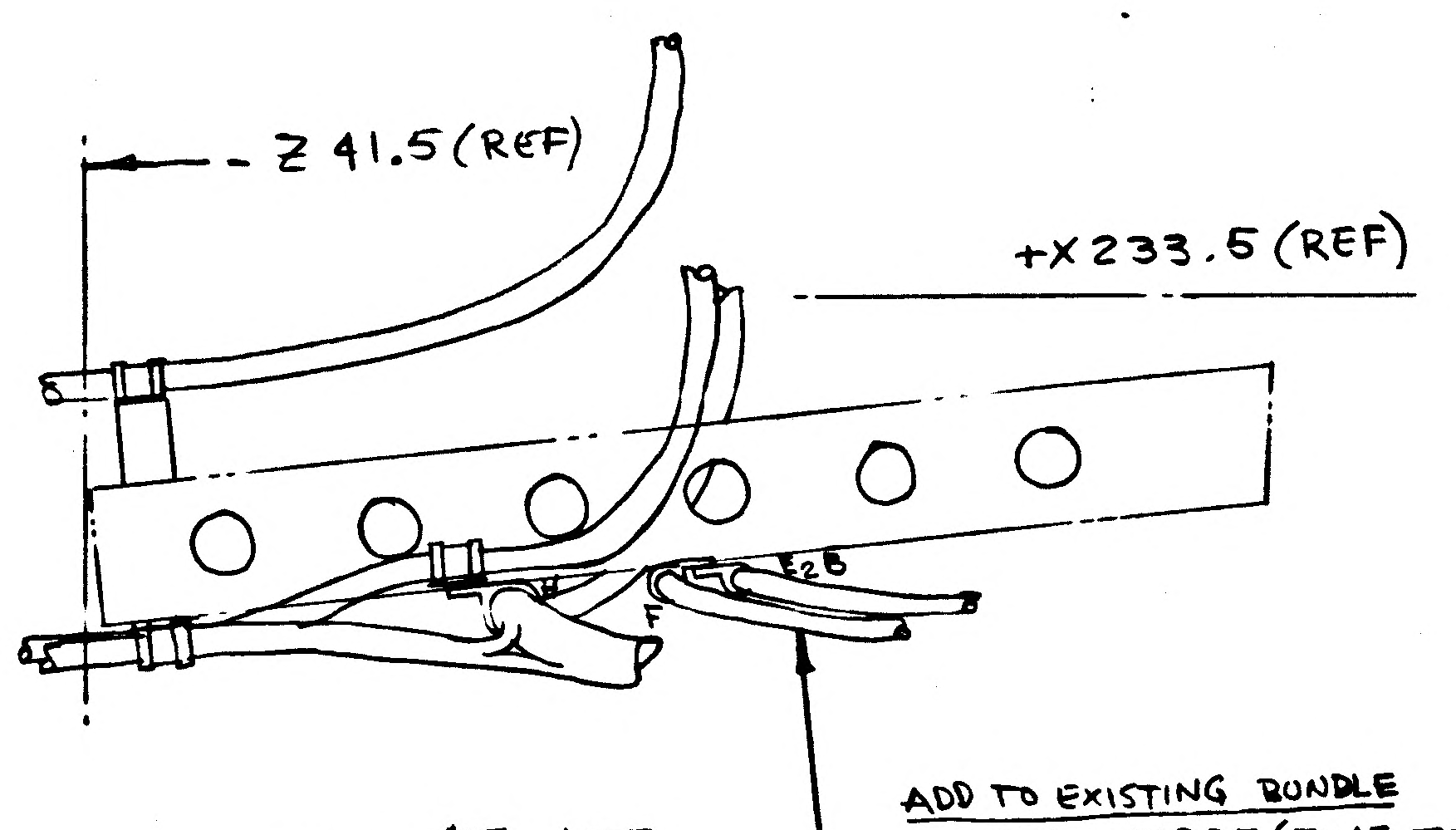
Z 41.5(REF)
+X233.5 (REF)
E
B
F

ADD TO EXISTING BUNDLE
LDW390-21925(J1145 TO J112) (R

VIEW AT-AT
LKG INBD ~ +Y11.5
SH 11.00 (ZONE 53A)

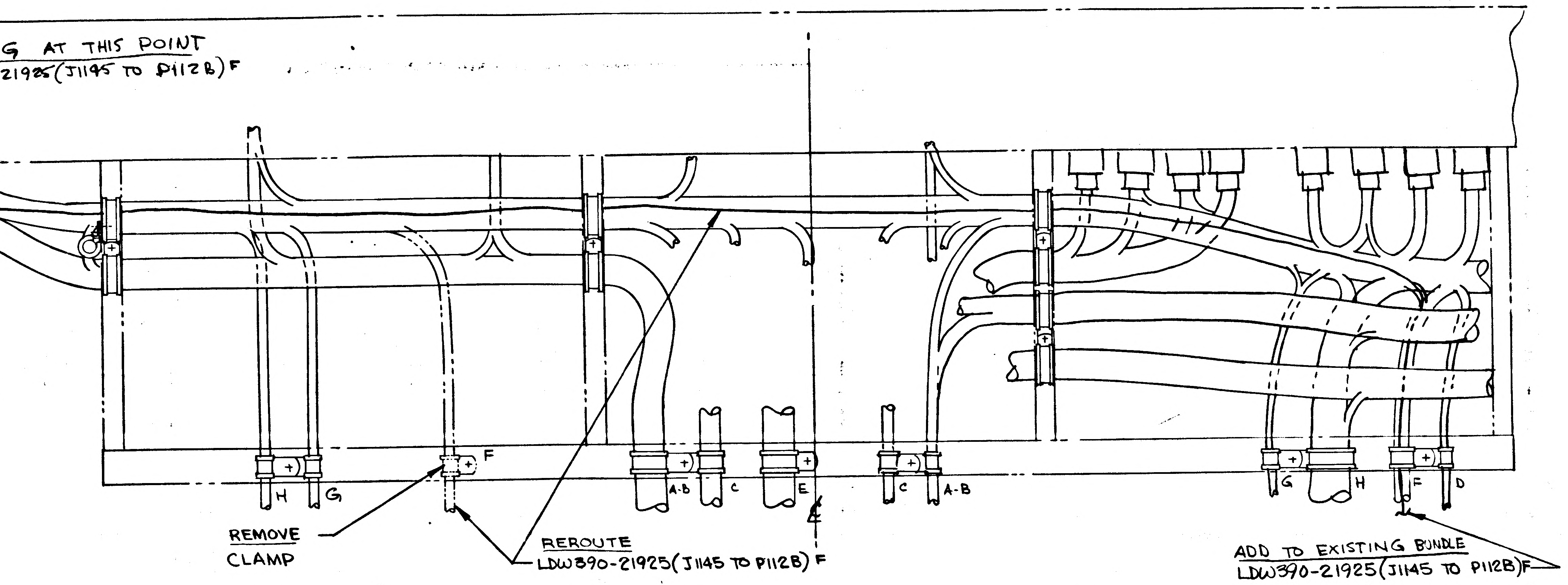
H
G
A-B
C
E
C
A-B
G
H
F
D

EXISTING AT THIS POINT
(LDW390-21925(J1145 TO P112B)F

REMOVE
CLAMP

REROUTE
LDW390-21925(J1145 TO P112B)F

ADD TO EXISTING BUNDLE
LDW390-21925(J1145 TO P112B)F

VIEW E-E LKG DOWN X238.50
SH 5.00 (ZONE 12A)

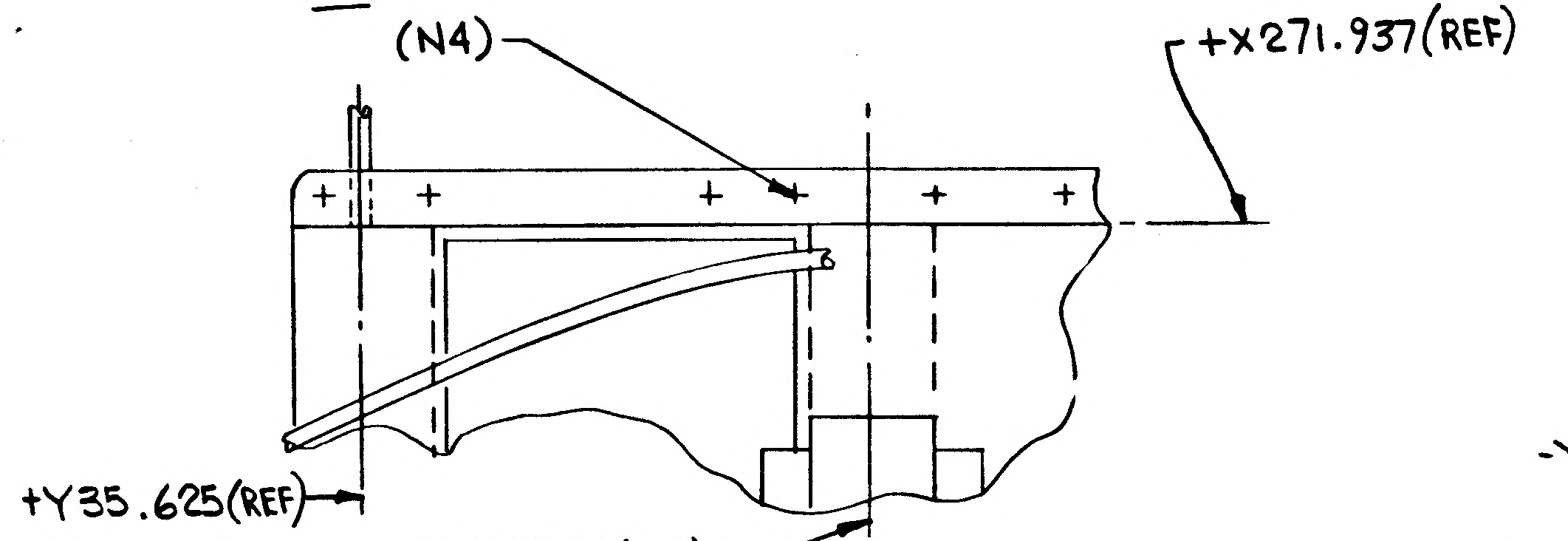
ADD
(N4)
+X271.937(REF)
+Y35.625(REF)
+Y28.500(REF)

VIEW LKG AFT~EQUIP RACK
SH 4.00 (ZONE 6C)

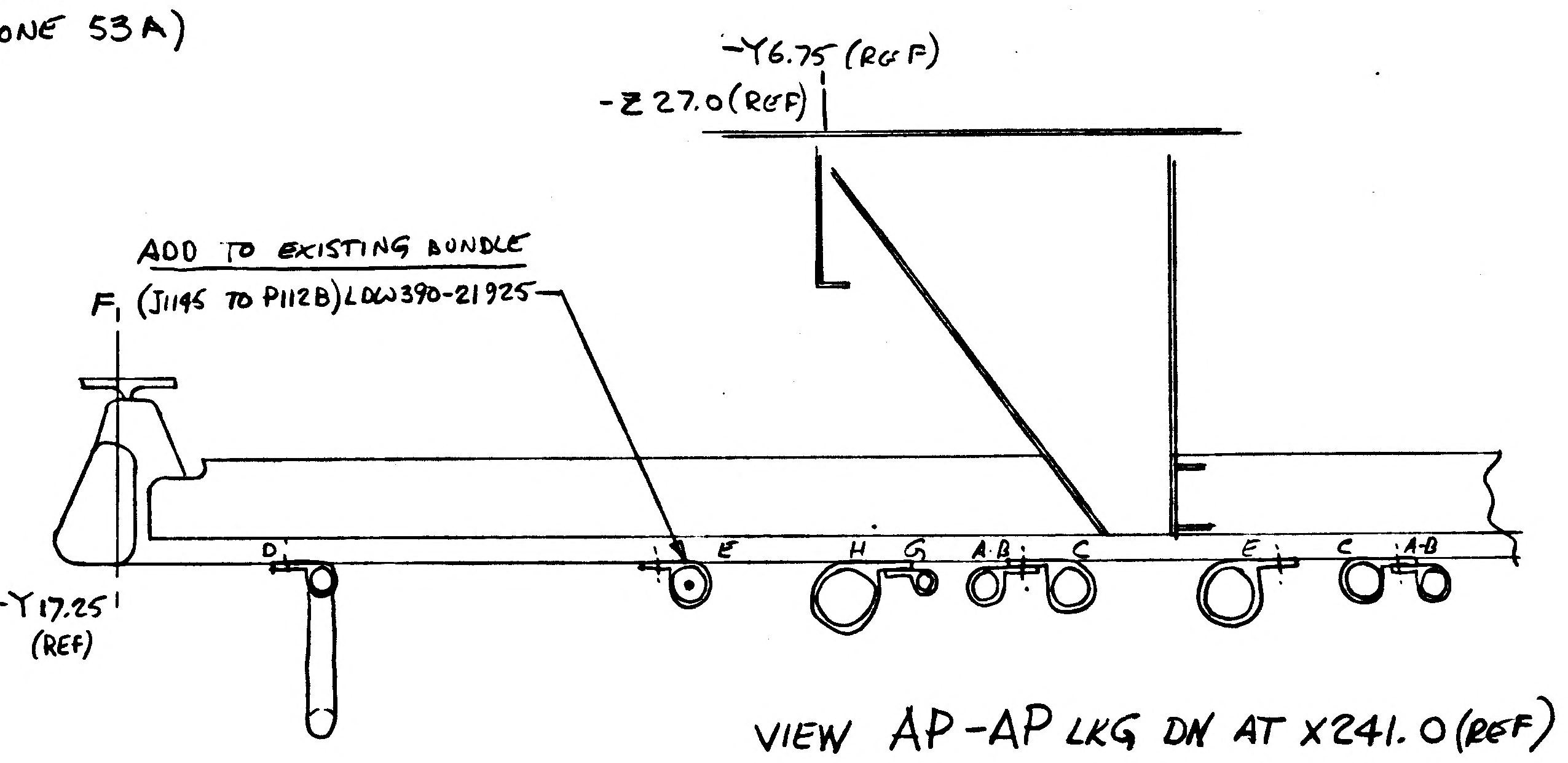
-Y6.75 (REF)
-Z 27.0(REF)
F
-Y17.25
(REF)
D
E
H
G
A-B
C
F
E
C
A-B

ADD TO EXISTING BUNDLE
(J1145 TO P112B)LDW390-21925

VIEW AP-AP LKG DN AT X241.0(REF)
SH 11.00 (ZONE 52B)

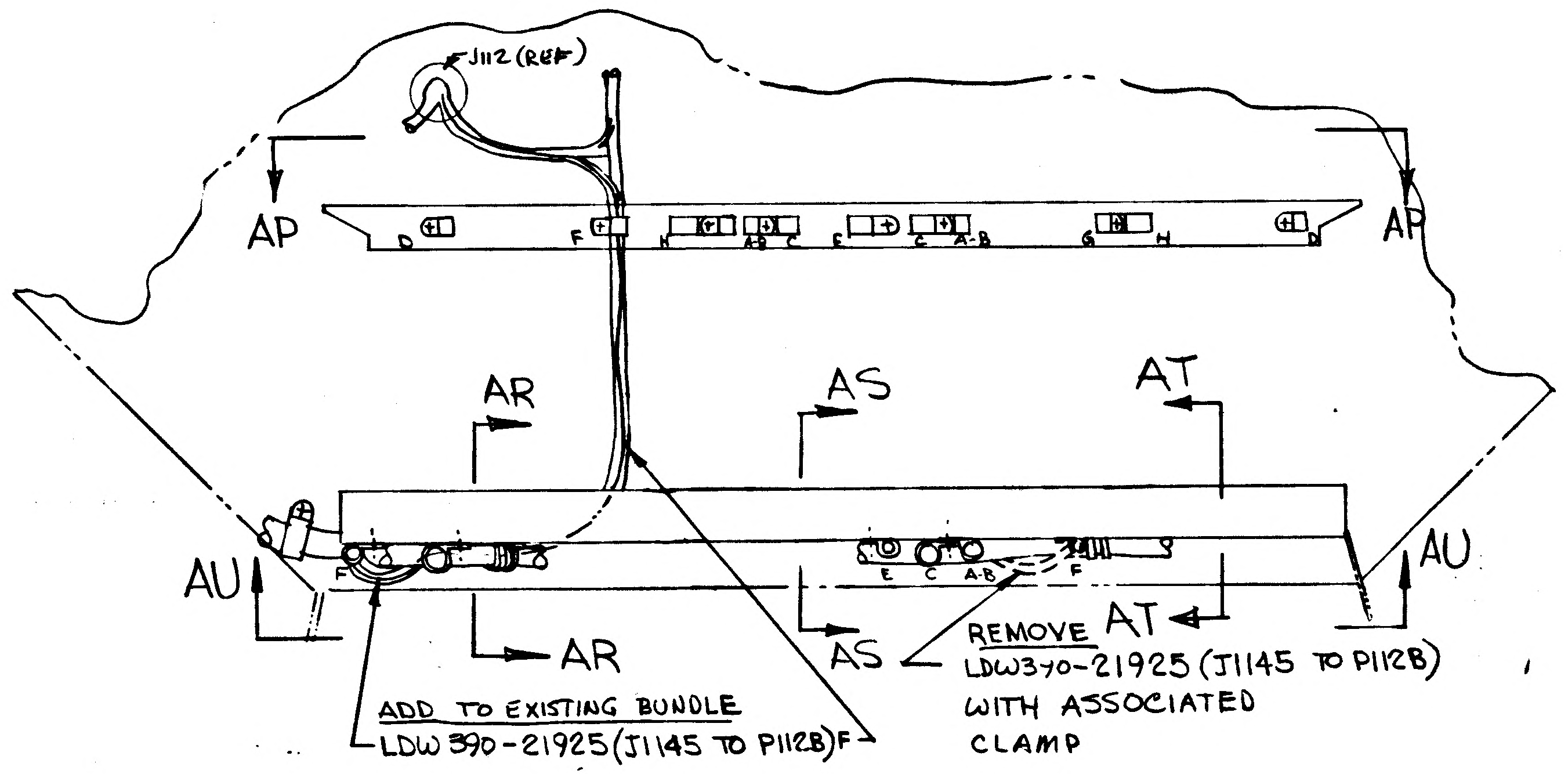
J112 (REF)
AP
AP
F
AR
AS
AT
AU
AU
AR
AS
AT

ADD TO EXISTING BUNDLE
LDW390-21925(J1145 TO P112B)F

REMOVE
LDW390-21925 (J1145 TO P112B)
WITH ASSOCIATED
CLAMP

VIEW LKG FWD~ -Z27 BHD
SH 9:00 (ZONE 38)

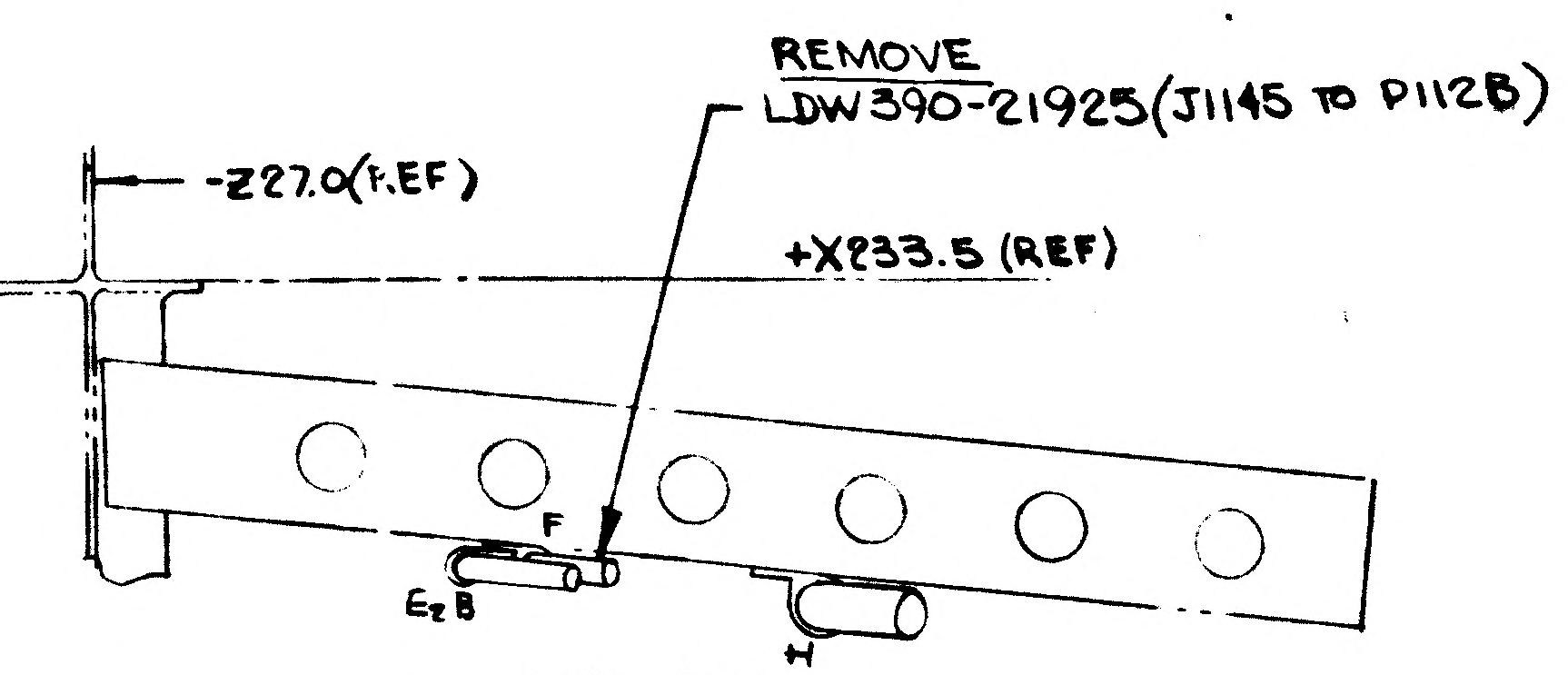
-Z27.0(REF)
+X233.5 (REF)
F
E&B
H

REMOVE
LDW390-21925(J1145 TO P112B)

VIEW AS-AS
LKG. INBD LH~Y.0
SH 1:00 (ZONE 54 A)

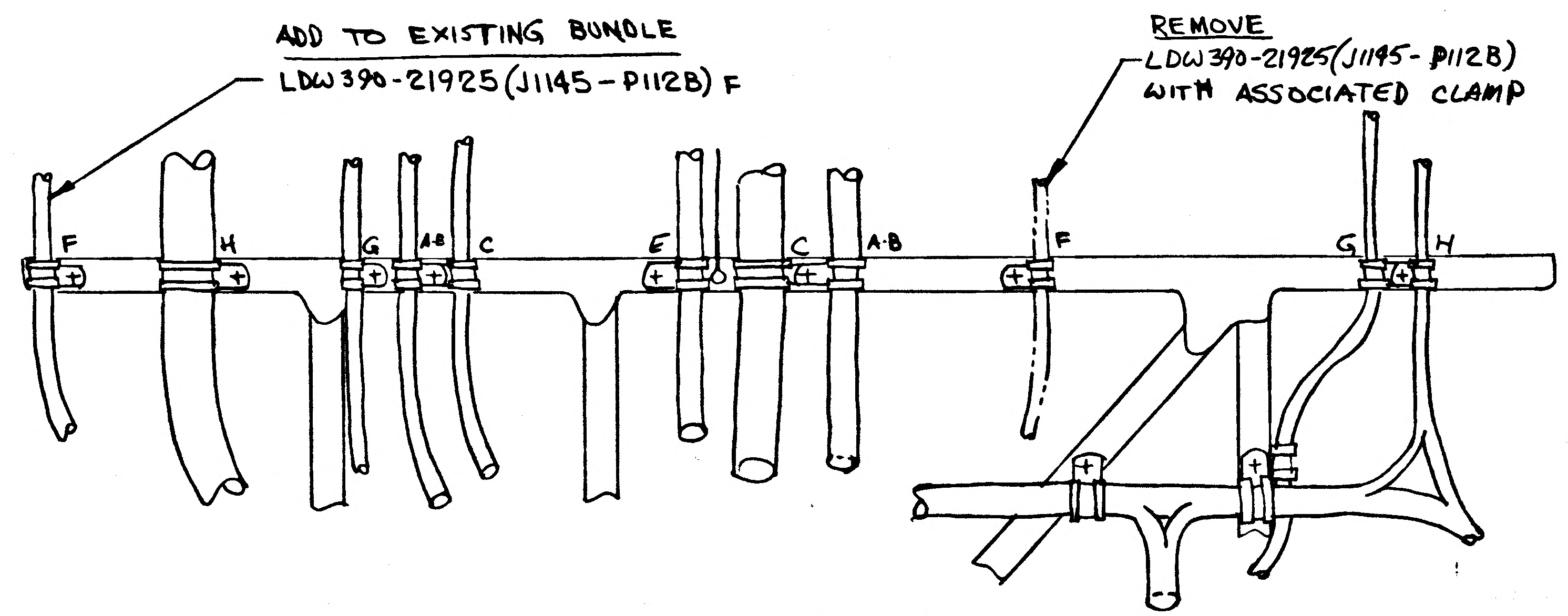
F
H
G
A-B
C
E
C
A-B
F
G
H

ADD TO EXISTING BUNDLE
LDW390-21925(J1145 - P112B) F

REMOVE
LDW390-21925(J1145- P112B)
WITH ASSOCIATED CLAMP

VIEW AU-AU LKG UP~ +X228.0
SH 11.00 (ZONE 51 A)

NOTE
1.) ALL LDW390- CABLE ASSEMBLY NUMBERS ARE TO BE FOR REFERENCE ONLY.

(B)
(5)

DETAIL SPEC REQD		CLASS II ENGRG CHG	✓	CLASS I ENGRG CHG	LCD 1078

CONTROL INFO NO LDW280B1479

REASON FOR EO
TO PROVIDE SUPPORT FOR WIRING AND CORRECT WIRE ROUTING

DESCRIPTION OF EO
ON-1 INSTL REROUTED CABLE ASSY. LDW390-21925 IN VIEWS AP-AP, AR-AR, AS-AS, AT-AT, AU-AU, & VIEW LKG FWD AT -Z27 BHD. IN F/D & B/M ADDED LDW390-21925-5(2), GB511J-08-5(2), AN960D8(4), AN960D8L(6) & MS21042L08(8). ADDED N4 (REF)

GRUMMAN EO RELEASE ✓
JK 1/24/

MODEL	PROCURING ACT. NO.	GAEC UNIT NO.	SUB CONTR UNIT NO.
LM		LM-2 (32)	

DRAWING REVISION REQD		DISPOSITION OF PARTS	
✓		✓	
REVISE DWG	RECORD EO	REWORK	SCRAP

	BY								
DATE	1/16/68			1-19-68	1-23-68		1/ /68	1-24-68
E	VDI	SUPPORT	RELIAB GROUP	GROUP LEADER	STRESS GROUP	LIAISON ENGRG	PROJ ENGR	

PRIORITY C

DRAWING TITLE
LINES INSTALLATION~ELECTRONIC
ASCENT STAGE~AFT EQUIP. BAY

ENGINEERING ORDER
DRAWING NO. LDW280-52360
EO NO. F2

1-19-68
ISSUED BY D. CAROLEO
Ex:1153
SECTION EQUIP. LINES/VDI
GROUP NO. 332
PL 25

CODE IDENT NO. 26512

GRUMMAN AIRCRAFT ENGINEERING CORP
BETHPAGE, L. I., N. Y.

ENG 32.3 REV 3-65

02/02
NAS 9-1100

PRINTING INFO ONLY DWG SIZE 30½X64½
FULL SIZE SHEET AREA (30½X64½) = 13.6 SQ. FT.
½ SHEET AREA (¼ OF FULL) = 3.4 SQ. FT.

ENG 32.1 REV 3-65 B

GRUMMAN AIRCRAFT ENGINEERING CORP.
CODE IDENT NO. 26512
ENGINEERING ORDER

DWG. NO. LDW 280 52360
EO NO. F3
CONTROL INFO NO. LM5-13787

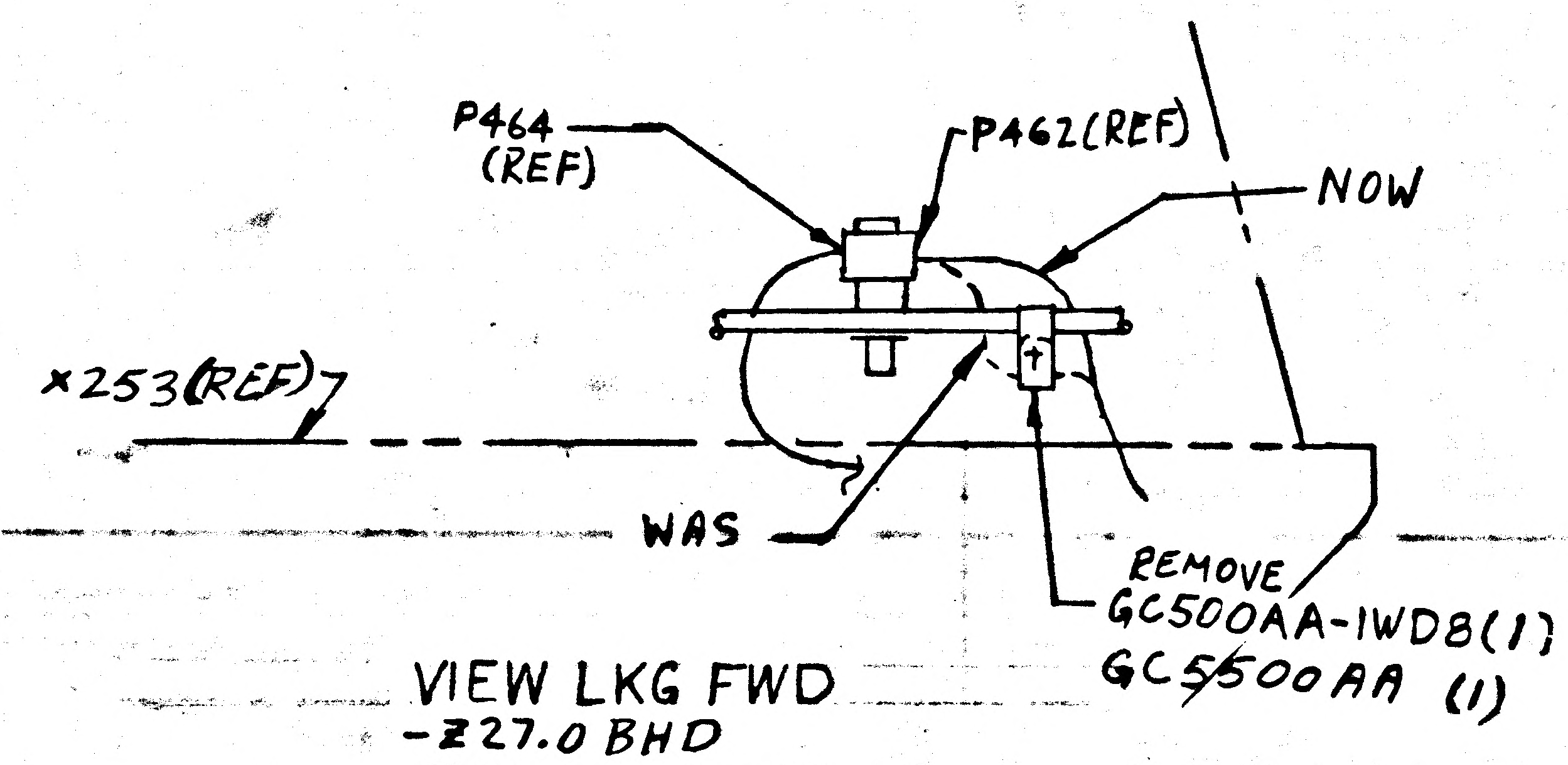

VIEW LKG FWD
-Z27.0 BHD
ZONE 37A SH9
LDW 280-52360-1

RELEASED BY LIAISON

DETAIL SPEC REQ ☐ CL II ENGRG CHG ✓ CL I ENGRG CHG ☐ (5)

REASON FOR EO: CONNECTOR CANNOT BE MATED

DESCRIPTION OF EO: ON-1 REMOVED GC500AA-1WD8 (1) & GC500AA (1) CLAMPS & REROUTED CABLE TO P462 (REF)

GAEC EO RELEASE: JK

MODEL	PROCURING ACTIVITY NO.	GAEC UNIT NO.	SUB CONTR UNIT NO.
LM		LM 2 (32)	

DRAWING CHANGE REQD: REVISE DWG ✓ RECORD EO
DISPOSITION OF PARTS: REWORK ✓ SCRAP

APPROVED BY								
DATE	2/1/68			—	1-27-68	2-6-68	2/1/68	1/27/68
	VDI	SUPPORT	RELIAB. GROUP	GROUP LEADER	STRESS GROUP	LIAISON ENGRG	PROJ ENGRG	

PRIORITY: C
DRAWING TITLE: LINES INSTL ELECTRONIC ASCENT
DRAWING NO.: LDW280-52360
EO NO.: F3

ISSUED BY ROSADO 86454 SECTION EQUIP LINES GROUP NO. 332 PL 5

01 NAS 9-1100

ENG 32.2 REV 3-66

GRUMMAN AIRCRAFT ENGINEERING CORP.
CODE IDENT NO. 26512
ENGINEERING ORDER

DWG NO. LDW280-52360		EO NO. F4
CONTROL INFO NO. LDW280B2311		

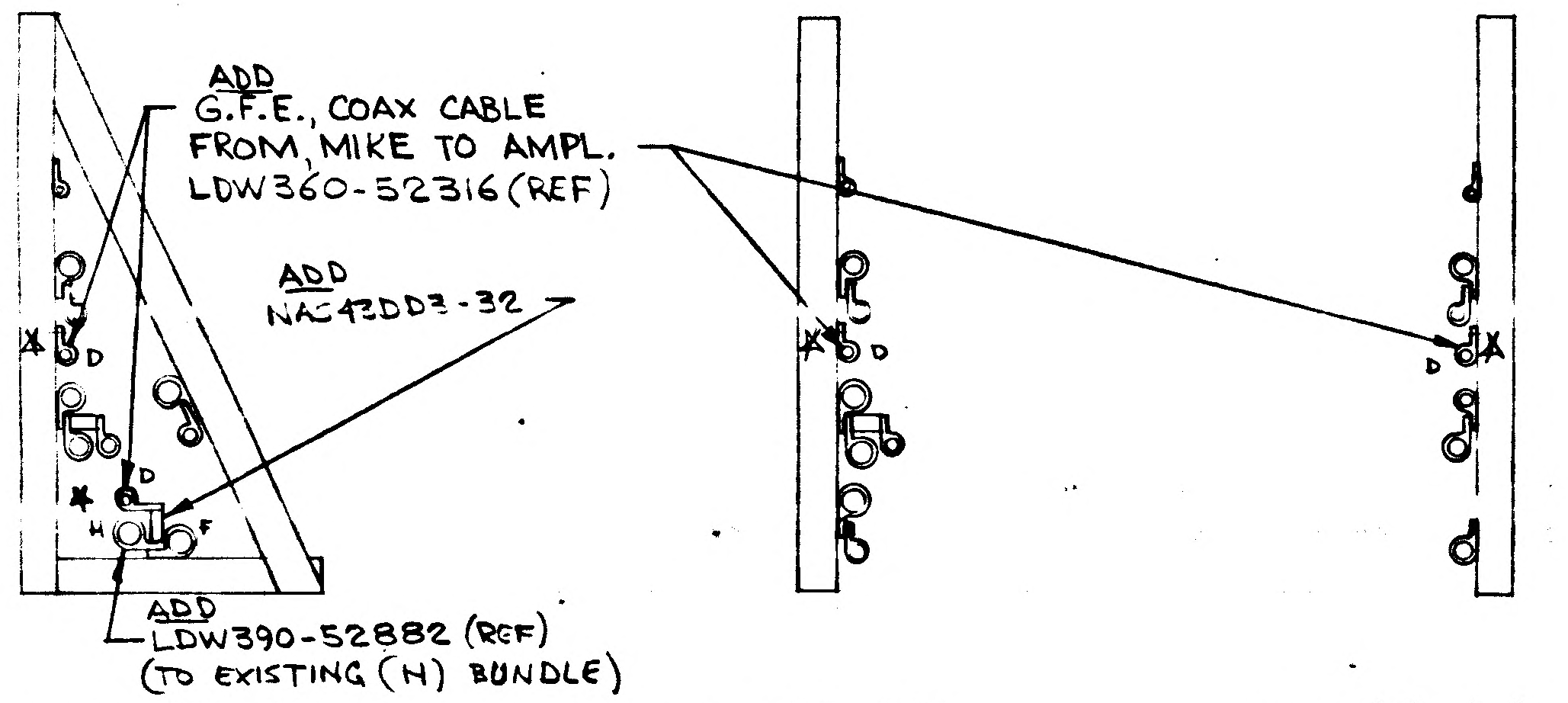
ADD
G.F.E., COAX CABLE
FROM, MIKE TO AMPL.
LDW360-52316 (REF)
ADD
NAS43DD3-32
D
H
F
ADD
LDW390-52882 (REF)
(TO EXISTING (H) BUNDLE)

VIEW AE-AE
SH 10.00 (ZONE 47 B)

VIEW AF-AF
SH 10.00 (ZONE 46B)

VIEW AG-AG
SH 10.00 (ZONE 46 B)

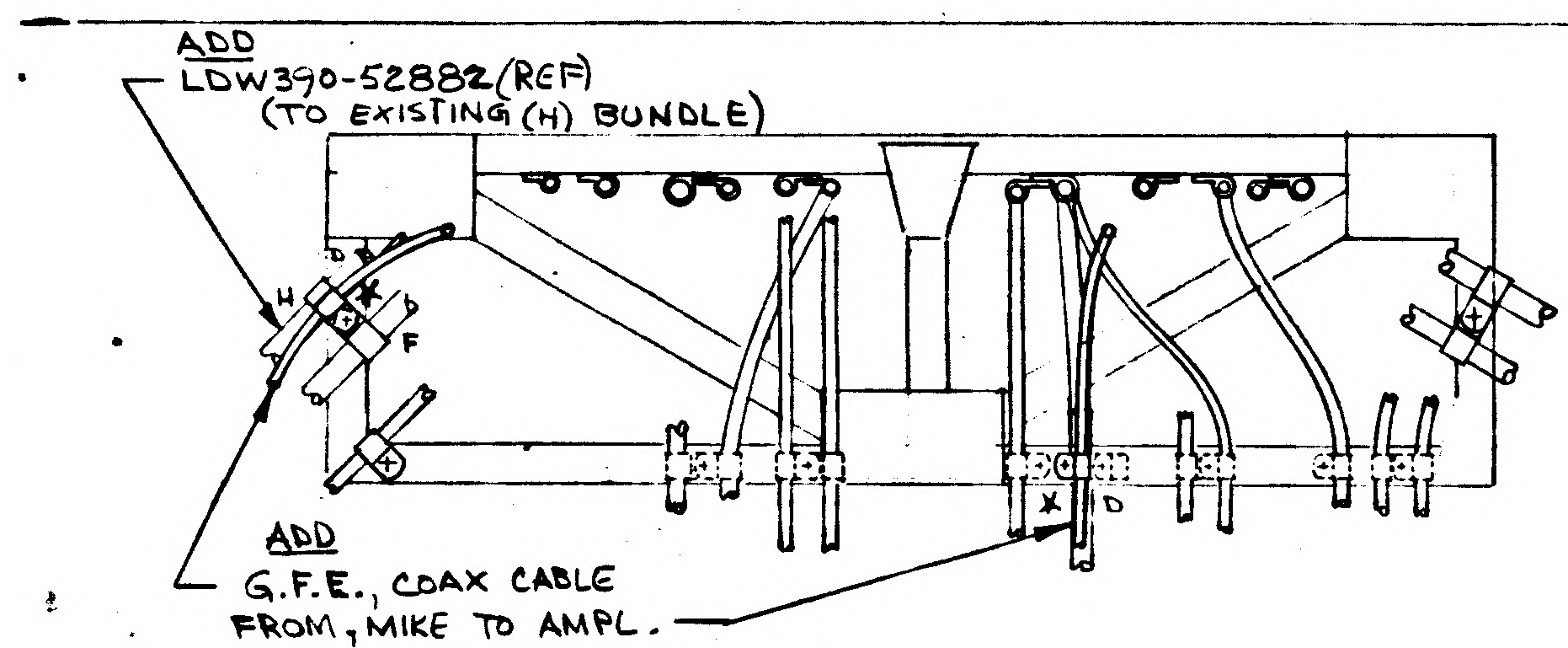
ADD
LDW390-52882 (REF)
(TO EXISTING (H) BUNDLE)
H
D
F
ADD
G.F.E., COAX CABLE
FROM, MIKE TO AMPL.
LDW360-52316 (REF)

SECT AJ-AJ LKG DN ~ +X 274.29
SH 10.00 (ZONE 47 A)

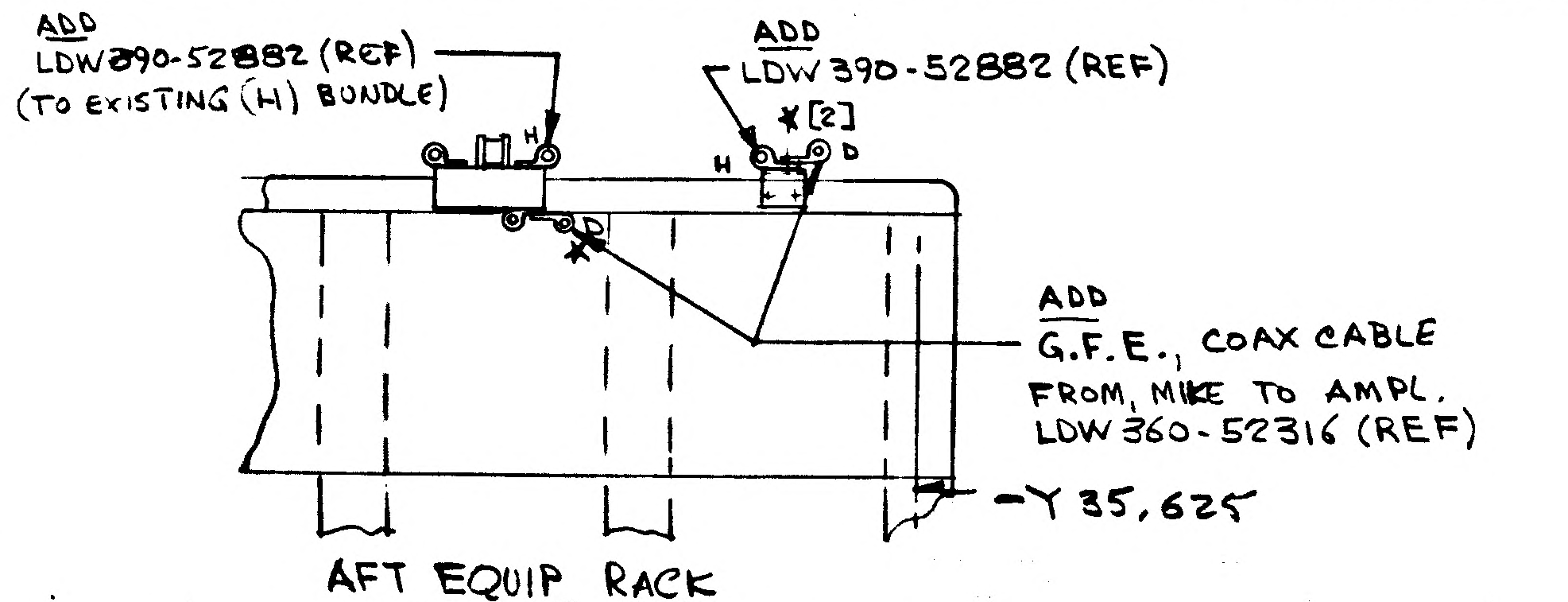
ADD
LDW390-52882 (REF)
(TO EXISTING (H) BUNDLE)
ADD
LDW 390-52882 (REF)
* [2]
H
D
ADD
G.F.E., COAX CABLE
FROM, MIKE TO AMPL.
LDW 360-52316 (REF)
-Y 35,625

AFT EQUIP RACK
VIEW LKG AFT
SH 4.00 (ZONE 3 C)

* INSTALL [7] CLAMPS PER LPC280-23

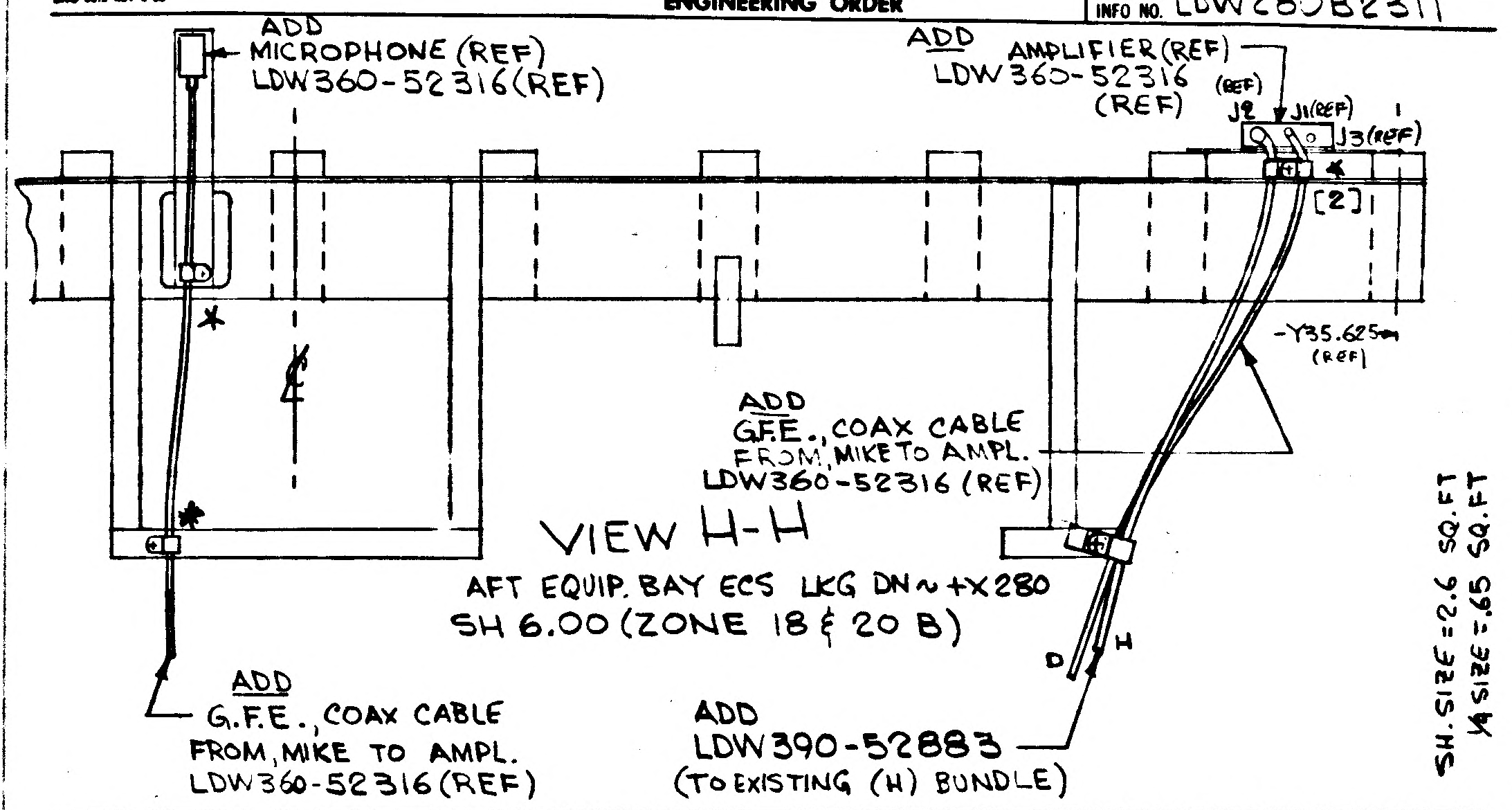
ADD
MICROPHONE (REF)
LDW360-52316 (REF)
ADD
AMPLIFIER (REF)
LDW 360-52316
(REF)
(REF)
J2
J1 (REF)
J3 (REF)
[2]
-Y35.625
(REF)
ADD
G.F.E., COAX CABLE
FROM, MIKE TO AMPL.
LDW360-52316 (REF)
D
H
ADD
G.F.E., COAX CABLE
FROM, MIKE TO AMPL.
LDW360-52316 (REF)
ADD
LDW390-52883
(TO EXISTING (H) BUNDLE)

VIEW H-H
AFT EQUIP. BAY ECS LKG DN ~ +X280
SH 6.00 (ZONE 18 & 20 B)

SH. SIZE = 2.6 SQ. FT
1/4 SIZE = .65 SQ. FT

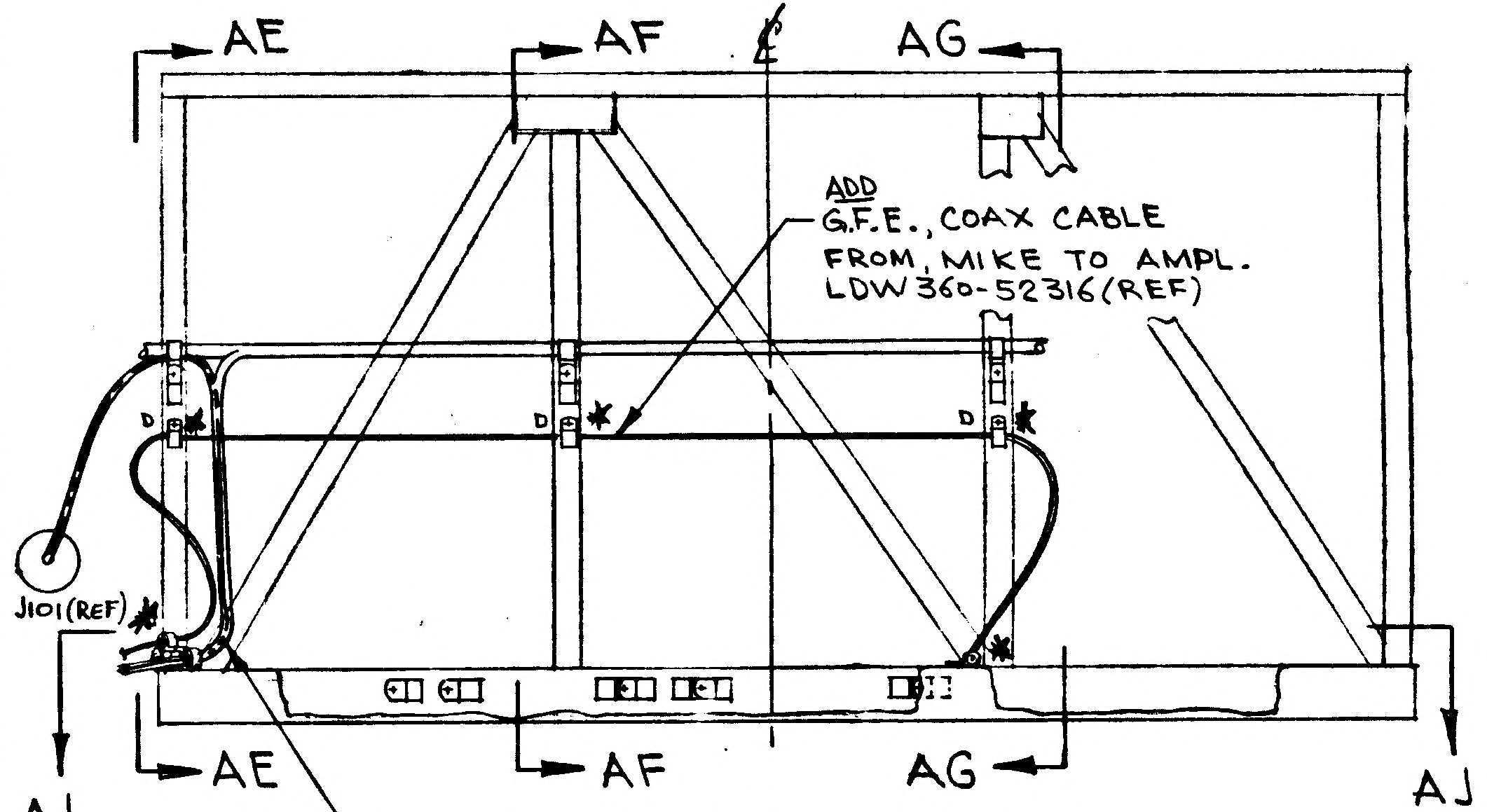
AE
AF
AG
ADD
G.F.E., COAX CABLE
FROM, MIKE TO AMPL.
LDW 360-52316 (REF)
J101 (REF)
D
AJ
AE
AF
AG
AJ

VIEW LKG FWD ~ -Z 27 BHD
SH 9.00 (ZONE 38 & 39 B)

ADD
LDW390-52882 (REF) {ADD LDW390-52882 TO EXISTING (H) BUNDLE)

DETAIL SPEC REQ		CL II ENGRG CHG		CL I ENGRG CHG	✓	LCD 2653 (5)

REASON FOR EO: TO ROUTE WIRE FOR MEAS. SOUND PRESSURE LEVEL / NASA TEST

DESCRIPTION OF EO: ON-1 INSTL ADDED LDW390-52882 (REF), G.F.E., COAX CABLE LDW360-52316 (REF) GC500AA, CLAMPS (7), & NAS43DD3-32 (4) TO VIEWS H-H, AE-AE, AF-AF, AG-AG, AJ-AJ & LKG AFT AT EQUIP RACK.

GAEC EO RELEASE ✓ VK 3/11/68

MODEL	EFFECTIVITY: PROCURING ACTIVITY NO.	GAEC UNIT NO.	SUB CONTR UNIT NO.
LM		LM-2 (32)	

DRAWING CHANGE REQD: REVISE DWG	RECORD EO	DISPOSITION OF PARTS: REWORK	SCRAP	APPROVED BY		SUPPORT	RELIAB. GROUP	GROUP LEADER	STRESS GROUP	LIAISON ENGRG	PROJ ENGRG
✓		✓		DATE	3/11/68			3-15-68	3/18/68		3/18/68
				E	VDI						

PRIORITY	DRAWING TITLE	DRAWING NO.	EO NO.
C	LINES INSTL. ELECTRONICS ASCENT STAGE ~ EQUIP BAY	LDW280-52360	F4

3/11/68
ISSUED BY DAN CAROLEO EX: 1153 SECTION VDI / EQUIP. LINES GROUP NO. 332 PL. 25

01 NAS 9-1100

REVISIONS

CHANGE LTR	ITEM NO.	SHEET NO.	ZONE	GRUMMAN INFO ONLY	DET SPEC	CLASS I	CLASS II	ENGRG ORDER	DESCRIPTION	EFFECTIVITY	DISPOSITION OF EXISTING PARTS REWORK	DISPOSITION OF EXISTING PARTS SCRAP	CHANGED BY AND DATE	ENGRG APPD	~~GOVT~~ APPD
A	1	3.00-2.00	2A					A1	ON-1 INSTL. ADDED LDW280P16231-13 DELETED -11	LM-2	✓		J. Bueyer 12/30/66		
	2	3.00 2.00	2-A 4A 4B					A2	TO-1 INSTL. ADDED DETAILS C-C & D-D & GT835C-4 TAPE		✓				
	3	3.00 2.00	4B						ON-1 INSTL. ADDED LSC269-502-1 DELETED LSC269-192-1		✓			1-12-67	1/12/67
	4	3.00	3,5A 3,4B 5,6B						ON-1 INSTL REVISED PICTURE OF LINES & CLAMP LOCATION TO AGREE WITH VEHICLE		NOT	REQD			
	5	1.00						V	ON SH 1.00 ADDED SH 1.01 SH 1.00 OF 4 WAS SH 1.00 OF 3	LM-2	NOT	REQD			

FOR CONTINUATION OF REVISIONS SEE SHEET

GRUMMAN AIRCRAFT ENGRG CORP, BETHPAGE, L. I., NEW YORK

SIZE	CODE IDENT NO.		
B	26512	LDW280-52364	A

SCALE NONE SHEET 1.01

ENG 77.3 5-65

01 NAS 9-1100

LDW280-52364 B

MODEL OR END ITEM	NEXT ASSY	MODULE OR SER NO.	REQD PER MODULE OR END ITEM
LM	LDW280-52001	LM-2(32)	1
PART NO. LDW280-52364-1		GAEC SCH NO. 30	

MODEL OR END ITEM	NEXT ASSY	MODULE OR SER NO.	REQD PER MODULE OR END ITEM
PART NO.		GAEC SCH NO.	

MODEL OR END ITEM	NEXT ASSY	MODULE OR SER NO.	REQD PER MODULE OR END ITEM
PART NO.		GAEC SCH NO.	

MAY BE REDRAWN ON PRODUCTION FORMAT 5

SH REV STATUS: FOR DESCRIPTION OF REV SEE SUBQ SH

SHEET	1.00	1.10	2.00			3.00			
REV	B	B	B			B			
SHEET									
REV									
SHEET									
REV									

LAST SECT LTR USED -D

LAST DASH NO. USED -1

GRUMMAN REL^S INFO B

PRIM NO.	001	
227	M2/B-1/9/8	

UNLESS OTHERWISE SPECIFIED DIMENSIONS ARE IN INCHES.
TOLERANCE UNLESS SPECIFIED
FRACTIONS - DECIMALS - ANGLES
~ ~ ~

ORIG DWG AUTH

DETAIL SPEC REQUIREMENT

CLASS II ENGRG CHANGE

CLASS I ENGRG CHANGE

CONTRACT NO. NAS 9-1100 | LINE ITEM 1 | DOCUMENTATION TYPE II

DRAWN BY	F. Breyer 9/21/66	WEIGHTS	
LAYOUT BY	CHAS. COHEN		
CHECKED BY	J. Soldwedel 10/24/66		
GRLEADER	J. Wolf 10/24/66		
VDI	W.R. Bischoff 10/25		
STRUCTURES	10/26	PROJ ENGR	R.W. Burger 10-27
STRUCTURES		REL GROUP	Tagliani 10-27-66

GRUMMAN AIRCRAFT ENGRG CORP
BETHPAGE, L. I., NEW YORK

LINES INSTALLATION
NITROGEN PURGE SUB-SYSTEM
ASCENT STAGE

SIZE	CODE IDENT NO.		
B	26512	LDW280-52364	B
SCALE	NONE	SHEET 1.00 OF 4	

(B)

ENG 77.1 12-65

01

NAS 9-1100

REVISIONS

CHANGE LTR	ITEM NO.	SHEET NO.	ZONE	GRUMMAN INFO ONLY PRIOR TO EVENT	DET SPEC	CLASS I	CLASS II	ENGRG ORDER	DESCRIPTION	EFFECTIVITY	DISPOSITION OF EXISTING PARTS		CHANGED BY AND DATE	ENGRG APPD	GOVT APPD
											REWORK	SCRAP			
A	1	3.00-2.00	2A					A1	ON-1 INSTL. ADDED LDW280P16231-13 DELETED -11	LM-2	✓		12/30/66		
	2	3.00 2.00	2-A 4A 4B					A2	TO-1 INSTL. ADDED DETAILS C-C & D-D & GT835C-4 TAPE		✓				
	3	3.00 2.00	4B						ON-1 INSTL. ADDED LSC269-502-1 DELETED LSC269-192-1		✓			1-12-67	1/12/67
	4	3.00	3,5A 3,4B 5,6B						ON-1 INSTL REVISED PICTURE OF LINES & CLAMP LOCATION TO AGREE WITH VEHICLE		NOT	REQD			
	5	1.00						V	ON SH 1.00 ADDED SH 1.01 SH 1.00 OF 4 WAS SH 1.00 OF 3	LM-2	NOT	REQD			
		1.00							SH. 1.10 WAS SH. 1.01						
B	1	3.00 2.00	4C 5B 6C 2A	5				E.O. B1	-1 INSTL: LDW280M16113-23 WAS -11; -27 WAS -13; -25 WAS -13. ADDED: GC500S-10W, MS21042L08, GB511J-08-1, AN960D8L (2).	LM-2 (32)	✓		H. BARUCH 18 DEC 1967		
	2	2.00, 3.00	2A	1				E.O. B2	-1 INSTL: LDW280-16071-1 WAS LDW280P16231-13						
	3	3.00 2.00	2A 4A 4B	1			✓	E.O. B3 LCD 1470	DELETE: LDW280-16071-1; DETAIL C-C & D-D. GB511J-08-3 WAS -08-1; GC500AA-1W D010 WAS GC500S-10W; ADDED NOTE 4; LDW280-16000-1874N-8 WAS -1440N-8.						
	4	3.00 2.00	2A					E.O. B4 LCD 1470	-1 INSTL: GB511J-3-3 WAS -08-3; AN960D10L (2) WAS AN960D8L (2); MS21042L3 WAS MS21042L08. ADDED: .190-.196 (DRILL #11)						
	5	3.00	3B					E.O. B5 LCD 1078	-1 INSTL: GC500J ROTATED 180°						
	6					✓		LEO280-708 LCD 1961	CANCELLED BY E.O. B7 (LEO 280-770)		NOT	REQ'D			
	7			E				LEO280-770 LCD 1961	CANCELS E.O. B6 (LEO 280-708)		✓				

FOR CONTINUATION OF REVISIONS SEE SHEET ______

GRUMMAN AIRCRAFT ENGRG CORP, BETHPAGE, L. I., NEW YORK

SIZE	CODE IDENT NO.		
B	26512	LDW280-52364	B
SCALE NONE		SHEET 1.10	

ENG 77.3 5-65

01

NAS 9-1100

QTY PER ASSEMBLY						CODE IDENT	PART NO.	I&T	NOMENCLATURE OR DESCRIPTION	MATERIAL	GOVT SPEC	COML SPEC	STOCK SIZE	PROCESS SYM	FINISH NO.	ZONE
CL					-1											
A					1		GS500AA-1WD010	E	CLAMP	GRUMMAN STD						
A					1		MS21042L3	E	NUT	STD PART						
A					1		GB511J-3-3	E	BOLT	GRUMMAN STD						
A					2		AN960D10L	E	WASHER	STD. PART						
A					AS REQD		GT835C-4	E	TAPE	GRUMMAN STD						
A					1		LSC269-502-1	E	TEE	SEE NOTE #1						
					1		-191-1		TEE							
					1		-131-6		TEE							
					1		-118-16		SEAL							
					1		-118-12		SEAL							
					3		-118-8		SEAL							
					8		-118-6		SEAL							
					3		LSC269-117-6		COUPLING NUT	SEE NOTE #1						
					1		LDW280M16113-23		ORIFICE	SEE DWG						
					1		LDW280M16113-25		ORIFICE							
					1		LDW280M16113-27		ORIFICE							
							LDW280-16000									
					1		-1874N-8		TUBE ASSY							
					1		-1335N-6									
					1		-1283N-12									
					1		-1281N-6									
					1		-1280N-6									
					1		-1279N-6									
A					1		-1278N-8	E	TUBE ASSY	SEE DWG						
							LDW280-16000									
A							LDW280-52364-1	E	LINES INSTL							

CL= CLEANLINESS LEVEL PER LSP-14-0011

SYM OR NO.	PROCESS OR FINISH	GRUMMAN SPEC OR MILITARY SPEC	SYM OR NO.	PROCESS OR FINISH	GRUMMAN SPEC OR MILITARY SPEC	SYM OR NO.	PROCESS OR FINISH	GRUMMAN SPEC OR MILITARY SPEC

I & T: IDENTIFICATION AND TRACEABILITY IN ACCORDANCE WITH : NONE

GRUMMAN AIRCRAFT ENGRG CORP, BETHPAGE, L. I., NEW YORK

SIZE	CODE IDENT NO.		
B	26512	LDW280-52364	B

SCALE NONE

SHEET 2.00

ENG 77.2 7-65

0 1

NAS 9-1100

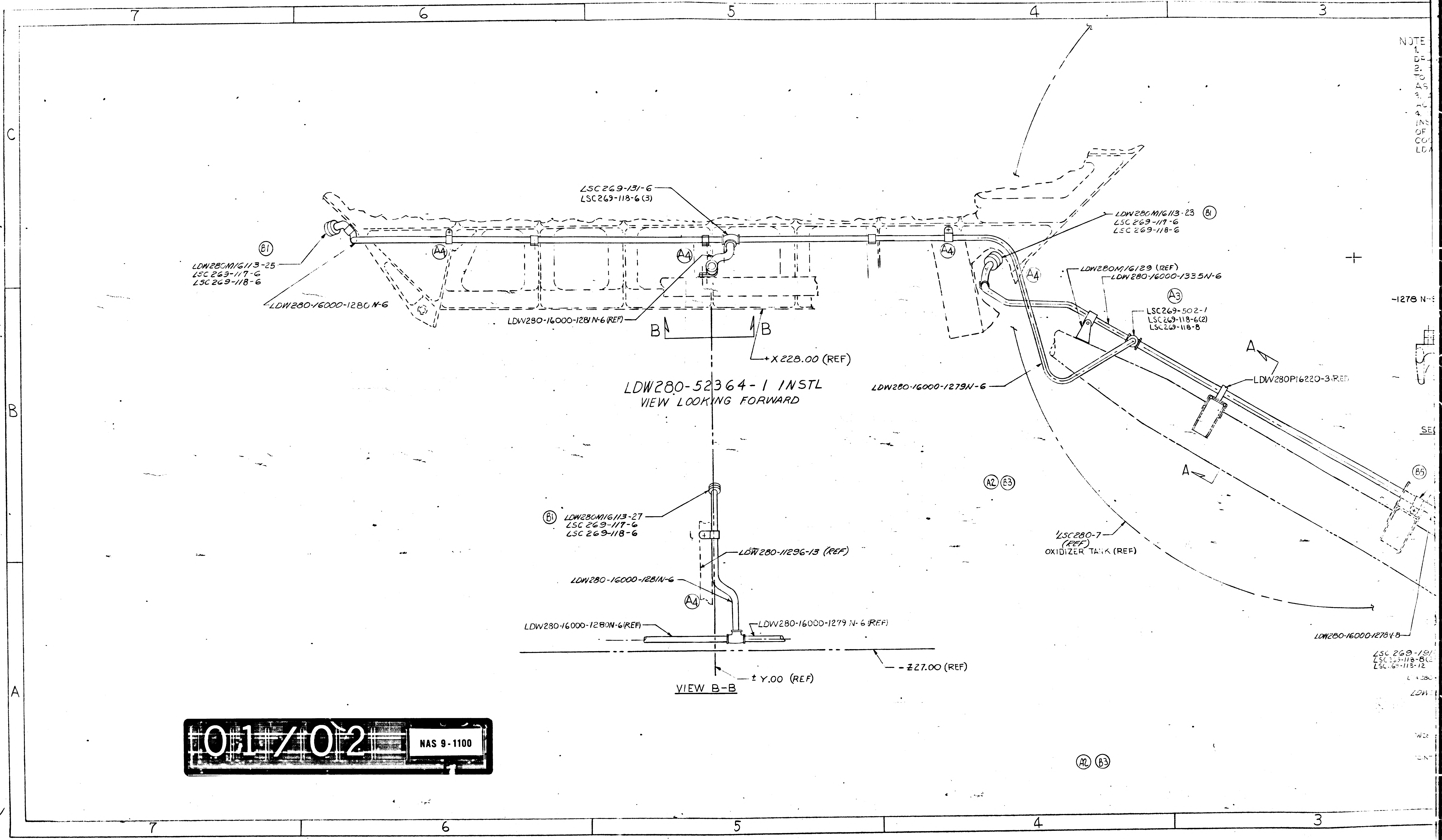
7
6
5
4
3
C
B
A
NOTE
LSC269-131-6
LSC269-118-6(3)
B1
LDW280M16113-25
LSC263-117-6
LSC269-118-6
LDW280-16000-1280N-6
A4
A4
LDW280-16000-1281N-6(REF)
B
B
+X 228.00 (REF)
LDW280M16113-23
LSC269-117-6
LSC269-118-6
B1
A4
A4
LDW280M16129 (REF)
LDW280-16000-1335N-6
A3
LSC269-502-1
LSC269-118-6(2)
LSC269-118-8
A
LDW280P16220-3(REF)
LDW280-16000-1279N-6
A
-1278 N-
SE
B5
A2 B3
LSC280-7
(REF)
OXIDIZER TANK (REF)
LDW280-16000-1278N-8
LSC 269-19
LSC269-118-8(
LSC269-118-12
A2 B3
B1
LDW280M16113-27
LSC269-117-6
LSC269-118-6
LDW280-11296-13 (REF)
LDW280-16000-1281N-6
A4
LDW280-16000-1280N-6(REF)
LDW280-16000-1279N-6(REF)
-Z27.00 (REF)
± Y.00 (REF)

LDW280-52364-1 INSTL
VIEW LOOKING FORWARD

VIEW B-B

01/02 NAS 9-1100

NOTES:
1. COMMERICAL PART SEE SPECIFICATION CONTROL DRAWING BEFORE ORDERING.
2. SELECTION AND INSTALLATION OF LINES CLAMPS TO BE IN ACCORDANCE WITH LPC 280-21 EXCEPT AS NOTED.
3. ALL GAMAH JOINT CONNECTIONS SHALL BE IN ACCORDANCE WITH LSP 14-17402.
4. INSTALLATION OF LDW 280-16000-1874N-8 SHALL INSURE THAT POINT "A" (CENTER OF BOTTOM EDGE OF LDW280M16147-11 FALLS WITHIN ±.050 OF THE COORDINATES MARKED "*"; ℄ MATES WITH LDW280-17389-072N-6, PART OF LDW280-51365 INSTL.

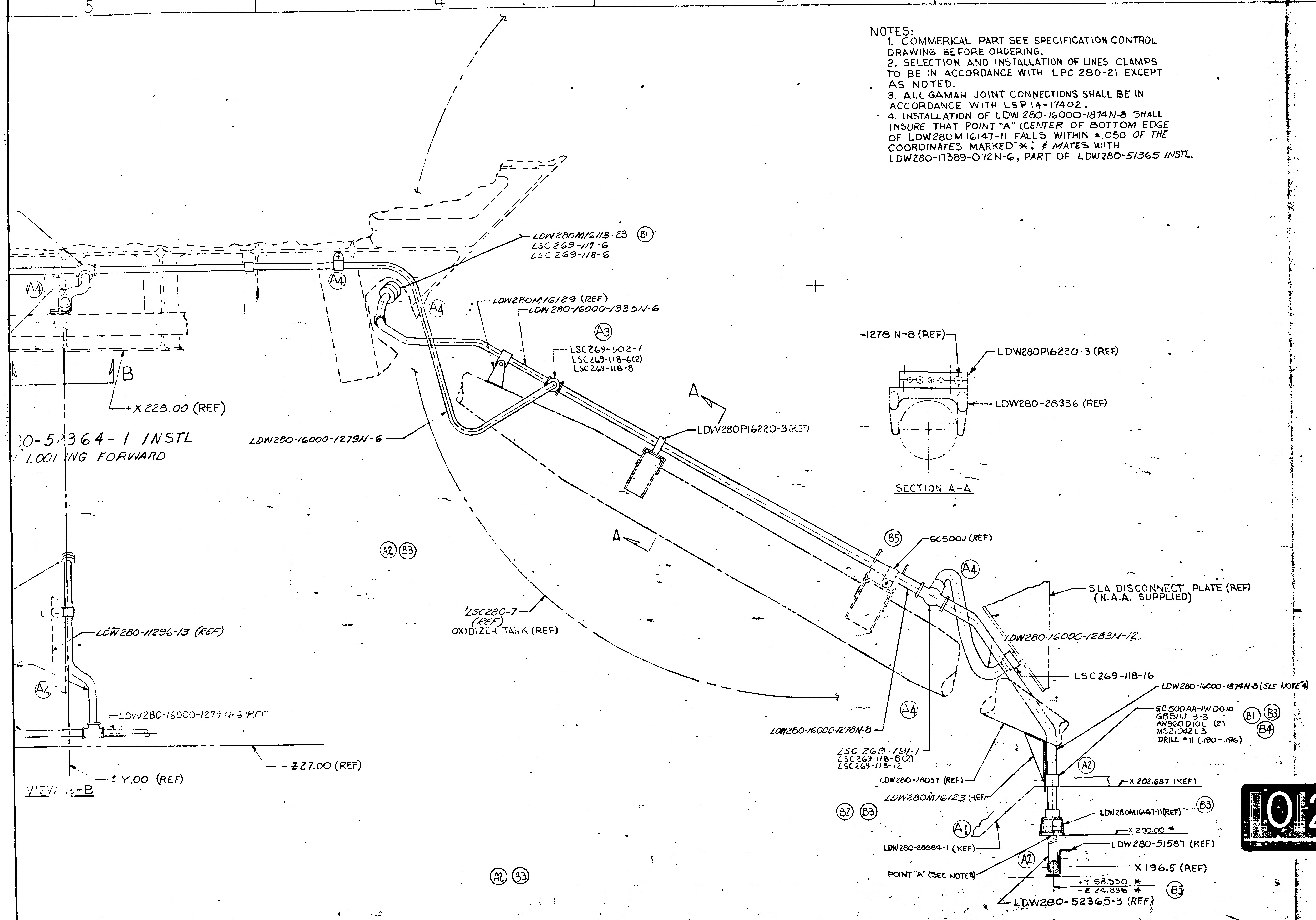
LDW280M16113-23 (B1)
LSC269-117-6
LSC269-118-6
LDW280M16129 (REF)
LDW280-16000-1335N-6
(A3)
LSC269-502-1
LSC269-118-6(2)
LSC269-118-8
(A4)
B
X 228.00 (REF)
0-52364-1 INSTL
LOOKING FORWARD
LDW280-16000-1279N-6
A
LDW280P16220-3 (REF)
A
(A2) (B3)
LSC280-7 (REF) OXIDIZER TANK (REF)
LDW280-11296-13 (REF)
LDW280-16000-1279N-6 (REF)
Z 27.00 (REF)
VIEW B-B
± Y.00 (REF)
-1278 N-8 (REF)
LDW280P16220-3 (REF)
LDW280-28336 (REF)
SECTION A-A
(B5)
GC500J (REF)
SLA DISCONNECT PLATE (REF) (N.A.A. SUPPLIED)
LDW280-16000-1283N-12
LSC269-118-16
LDW280-16000-1874N-8 (SEE NOTE 4) (B3)
GC500AA-1WD010
GB511J-3-3
AN960D10L (2)
MS21042L3
DRILL #11 (.190-.196)
(B1) (B3) (B4)
LDW280-16000-1278N-8
LSC 269-191-1
LSC269-118-8(2)
LSC269-118-12
LDW280-28037 (REF)
LDW280M16123 (REF)
(A2)
X 202.687 (REF)
(B2) (B3)
(A1)
LDW280M16147-11 (REF) (B3)
X 200.00 *
LDW280-28884-1 (REF)
LDW280-51587 (REF)
(A2)
X 196.5 (REF)
POINT "A" (SEE NOTE 4)
+Y 58.330 *
-Z 24.895 *
(B3)
LDW280-52365-3 (REF)
(A2) (B3)
5
4
3
2
1

MANUFACTURING OPERATIONS
UNLESS OTHERWISE SPECIFIED NOTES CHECKED √ APPLY TO THIS DWG.

- PART NUMBER AND ALL OTHER MARKINGS IN REGION MARKED ⊠ USE BOTH SIDES IF NECESSARY.
- FILLET AND INSIDE CORNER RADII TOLERANCES .016R TO .062R ± .010 .063R TO .250R ± .015 OVER .250R ± .030
- DEPTH SHOWN FOR TAPPED HOLES IS FULL THDS. 2-3 IMP THDS. BEYOND PERMISSIBLE.
- EXTERNAL THREAD LENGTH SHOWN INCLUDES 2 IMPERFECT THREADS MAX.
- DO NOT CADMIUM PLATE & PAINT HOLES OR SURFACES MARKED WITH DOUBLE ASTERISK.
- MISMATCH STEP OF ± .005 PERMISSIBLE DUE TO CHANGE OF CUTTERS AT INSIDE INTERSECTING SURFACES.
- DIAMETERS MARKED MUST BE CONCENTRIC WITHIN FULL INDICATOR READING
- HOLES MUST BE KEPT FREE OF CHROME PLATING SOLUTION.
- ALL DIMENSIONS SHOWN TO BE MET AFTER CADMIUM PLATING. THICKNESS OF PLATE .0003 MIN. TO .0005 MAX. MIN. THICKNESS TO BE .0002 ON THREADED AREAS. NO ALLOWANCE FOR PLATING IN HOLES
- 125 SURFACE ROUGHNESS INCLUDING REAMED HOLES PER MIL-STD-10
- 200 FOR ALL DRILLED HOLES
- REMOVE ALL BURRS. BREAK ALL EDGES .015-.031
- INSPECTION INFORMATION MINIMUM PERMISSIBLE AVERAGE EDGE DISTANCE MARKED IS
- SYMBOL √ DENOTES SURFACE TO BE MACHINED
- UNLESS OTHERWISE SPECIFIED TOLERANCE ON FLANGES IS ± 1/32
- LENGTHS OF AN, NAS & MS AL ALY RIVETS SHORTER THAN 1 INCH ARE NOT SPECIFIED.
- TOLERANCE ON LOFTED DELINEATIONS IS

DWG SIZE 28 X 70

PRINTING INFO ONLY
FULL SIZE SHEET AREA (30 X 76) = 19 SQ. FT.
1/2 SIZE SHEET AREA (1/4 OF FULL) = 9.5 SQ. FT.

PRINT TRIM LINE

C
B
A

LDW280-52364 B

LDW280-52364 B

02/02

NAS 9-1100

GRUMMAN AIRCRAFT ENGRG CORP., BETHPAGE, L. I., NEW YORK

SIZE	CODE IDENT NO.		
H	26512	LDW280-52364	B

LM
MODEL OR END ITEM
SCALE 1/2
SHEET 3.00
(B)

THIS IS AN ORIGINAL DWG

ENG 32.1 REV 3-66

GRUMMAN AIRCRAFT ENGINEERING CORP.
CODE IDENT NO. 26512 *

ENGINEERING ORDER

DWG. NO. LDW280-52364
EO NO. A1
CONTROL INFO NO. LDW280A-3169

ON -1 INSTL.

ADD LDW280P16231-13 WAS -11

5

DETAIL SPEC REQ	☐	CL II ENGRG CHG	☐	CL I ENGRG CHG	☐

REASON FOR EO: DESIGN CHANGE

DESCRIPTION OF EO: ADDED LDW280P16231-13 WAS -11

GAEC EO RELEASE: JK 11/21

MODEL	EFFECTIVITY: PROCURING ACTIVITY NO.	GAEC UNIT NO.	SUB CONTR UNIT NO.
LM		LM-2(32)	

DRAWING CHANGE REQD: REVISE DWG	RECORD EO	DISPOSITION OF PARTS: REWORK	SCRAP
✓		✓	

		SUPPORT	RELIAB GROUP	GROUP LEADER	STRESS GROUP	LIAISON ENGRG	PROJ ENGRG	~~CONT~~
APPROVED BY	JW	—	—	—	CW			
DATE	11/9/66				11/14/66		11-19-66	11-21-66
1	VD1							

PRIORITY: C

DRAWING TITLE: TUBE A/S D/S INTERCONNECTION N_2 PURGE

DRAWING NO.: LDW280-52364

EO NO.: A1

11/9/66
ISSUED BY F. BREYER X7033 SECTION EQUIP LINES (YDI) GROUP NO. 332 PL 35

01 NAS 9-1100

ENG 32.2 REV 3-65

GRUMMAN AIRCRAFT ENGINEERING CORP.
CODE IDENT NO. 26512
ENGINEERING ORDER *

DWG. NO. LDW280-52364 | EO NO. A2
CONTROL INFO NO. LDW280A 4916

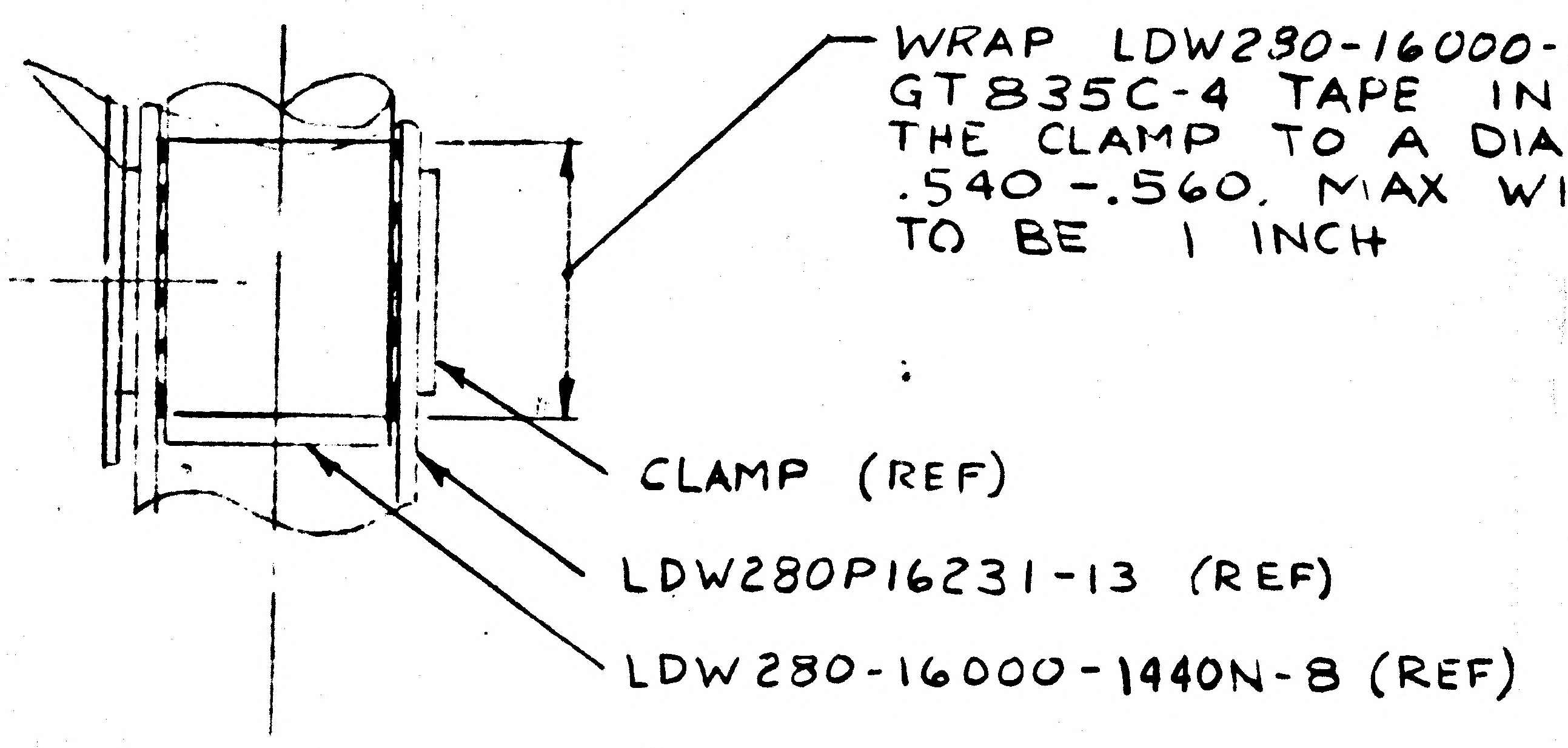
WRAP LDW280-16000-1440N-8 WITH GT835C-4 TAPE IN THE AREA OF THE CLAMP TO A DIAMETER OF .540-.560. MAX WIDTH OF WRAP TO BE 1 INCH

CLAMP (REF)
LDW280P16231-13 (REF)
LDW280-16000-1440N-8 (REF)

DETAIL *

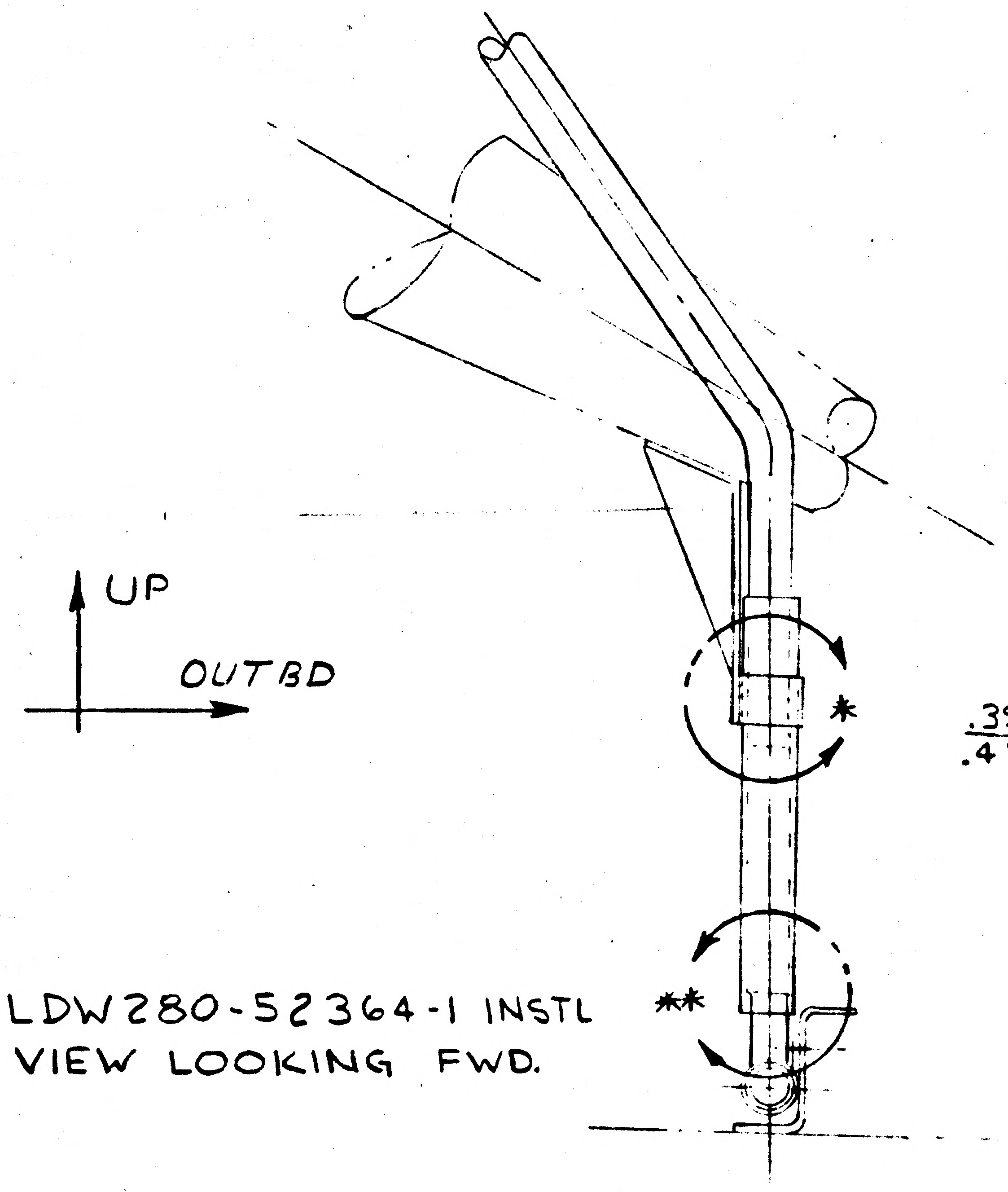

LDW280-52364-1 INSTL
VIEW LOOKING FWD.

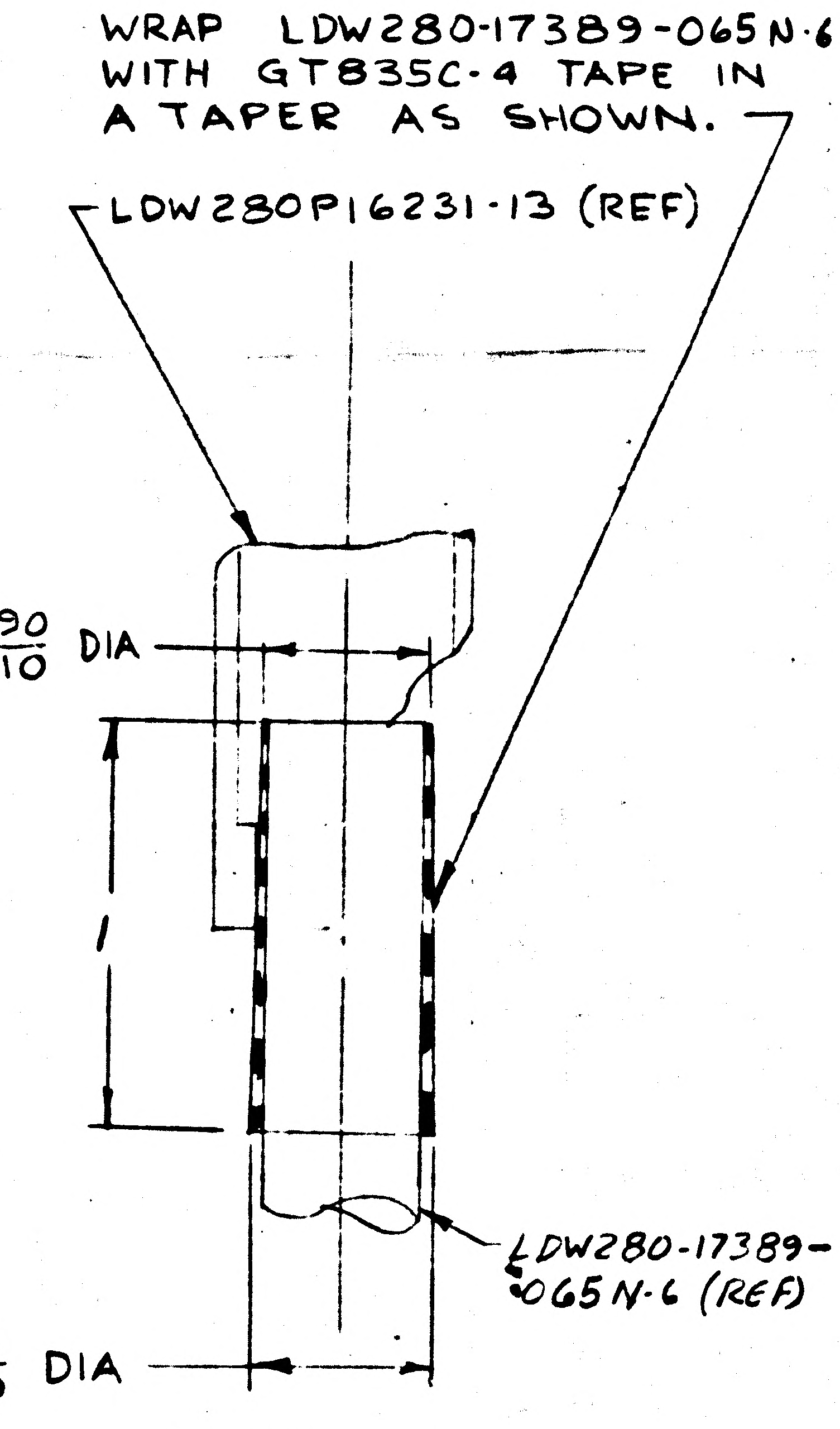
WRAP LDW280-17389-065N-6 WITH GT835C-4 TAPE IN A TAPER AS SHOWN.

LDW280P16231-13 (REF)
.390/.410 DIA
1
LDW280-17389-065N-6 (REF)
.430/.450 DIA

DETAIL **

*, ** USE NEXT AVAILABLE DETAIL LETTERS.

DETAIL SPEC REQ ☐ CL II ENGRG CHG ☐ CL I ENGRG CHG ☐

REASON FOR EO: TO RESTRICT LEAKAGE OF N_2 AT INTERSTAGE CONNECTION.

DESCRIPTION OF EO: TO -1 INSTL ADDED DETAILS *, & ** & GT835C-4 TAPE

GAEC EO RELEASE: FR 1/12/7

MODEL	PROCURING ACTIVITY NO.	GAEC UNIT NO.	SUB CONTR UNIT NO.
LM		LM-2 (32)	

DRAWING CHANGE REQD: REVISE DWG ✓ RECORD EO
DISPOSITION OF PARTS: REWORK ✓ SCRAP

APPROVED BY				JW/CHC				
DATE	1/12/67			1-12-67			1/12/67	1/12/67
1	VDI	SUPPORT	RELIAB GROUP	GROUP LEADER	STRESS GROUP	LIAISON ENGRG	PROJ ENGRG	

PRIORITY: C
DRAWING TITLE: LINES INSTL NITROGEN PURGE SUB-SYSTEM A/S
DRAWING NO.: LDW280-52364
EO NO.: A2

ISSUED BY C.H COHEN X7033 SECTION EQUIP LINES GROUP NO. 332 PL 35

01 NAS 9-1100

B

ENG 32.2 REV 3-65

GRUMMAN AIRCRAFT ENGINEERING CORP.
CODE IDENT NO. 26512
ENGINEERING ORDER

DWG. NO.	LDW280-52364	EO NO.	B1
CONTROL INFO NO.	LDW280A-5190		

IN F/D 4 B/M

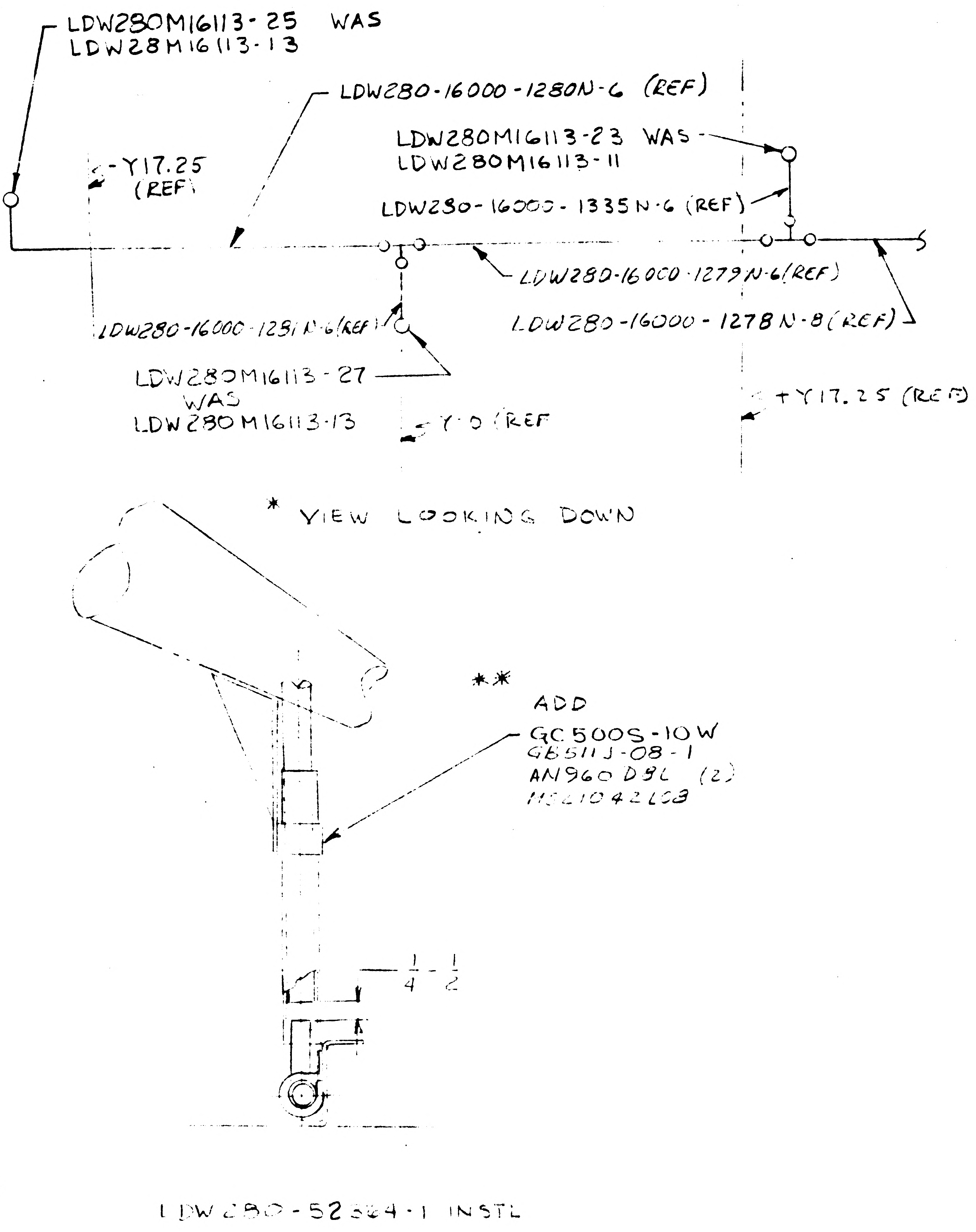

LDW280M16113-25 WAS
LDW28M16113-13
LDW280-16000-1280N-6 (REF)
LDW280M16113-23 WAS
LDW280M16113-11
-Y17.25
(REF)
LDW280-16000-1335N-6 (REF)
LDW280-16000-1279N-6(REF)
LDW280-16000-1251N-6(REF)
LDW280-16000-1278N-8(REF)
LDW280M16113-27
WAS
LDW280M16113-13
Y-0 (REF
+Y17.25 (REF)
* VIEW LOOKING DOWN
**
ADD
GC500S-10W
GB511J-08-1
AN960D8L (2)
MS21042L08
1-1/4

LDW280-52364-1 INSTL

DETAIL SPEC REQ		CL II ENGRG CHG		CL I ENGRG CHG		LAV510-326	5

REASON FOR EO:
* REVISED ORIFICE SIZES PER SYSTEMS TEST
** INSURE PROPER SEALING OF SYSTEM

DESCRIPTION OF EO:
IN F/D & B/M FOR -1
LDW280M16113-23,-25-27 WAS LDW280M16113-11,-13(2)
ADDED: GC500S10W, MS21042L08 GB511J08 & AN960D8L(2)

GAEC C EO RELEASE: FR 1/25/67

MODEL	PROCURING ACTIVITY NO.	GAEC UNIT NO	SUB CONTR UNIT NO
LM		LM-2(32)	

DRAWING CHANGE REQD		DISPOSITION OF PARTS	
REVISE DWG	RECORD EO	REWORK	SCRAP
✓		✓	

	VDI	SUPPORT	RELIAB GROUP	GROUP LEADER	STRESS GROUP	LIAISON ENGRG	PROJ ENGRG	~~GOVT~~
APPROVED BY	JAP			JW/CHC	CW			
DATE	1/23/67			1/23/67	1-25-67		1/23/67	1-25-67
5								

PRIORITY: C

DRAWING TITLE: LINES INSTL NITROGEN PURGE SUBSYSTEM - A

DRAWING NO.: LDW280-52364

EO NO.: B1

ISSUED BY E.H. COHEN 1/4 + 1 SECTION EQUIP LINES GROUP NO. 332 PL 35

01 NAS 9-1100

B

ENG 32 1 REV 3-65

GRUMMAN AIRCRAFT ENGINEERING CORP.
CODE IDENT NO. 26512
ENGINEERING ORDER

DWG NO LDW280-52364		EO NO. B2
CONTROL INFO NO LDW280A-5105		

ON -1 INSTALLATION:-

IN F/D & B/M:-

LDW280-16071-1 WAS LDW280P16231-13

5

DETAIL SPEC REQ	☐	CL II ENGRG CHG	☐	CL I ENGRG CHG	☐

REASON FOR EO	DESCRIPTION OF EO	GAEC EO RELEASE
TO INSURE THE USE OF REDESIGNED INTERCONNECT LINE	ON -1 INSTL. IN F/D & B/M LDW280-16071-1 WAS LDW280P16231-13	C1 C E 2/6/7

MODEL	EFFECTIVITY		
	PROCURING ACTIVITY NO.	GAEC UNIT NO	SUB CONTR UNIT NO
LM		LM-2 (32)	

DRAWING CHANGE REQD		DISPOSITION OF PARTS									
				APPROVED BY	JaP	—	—	JW/CHC	WJH		
✓		✓		DATE	2/2/67			2-2-67	2/2/67	2/3/67	2/4/67
REVISE DWG	RECORD EO	REWORK	SCRAP	1	VDI	SUPPORT	RELIAB GROUP	GROUP LEADER	STRESS GROUP	LIAISON ENGRG	PROJ ENGRG

PRIORITY	DRAWING TITLE	DRAWING NO.	EO NO.
C	LINES INSTL NITROGEN PURGE SUBSYTEM - A/S	LDW280-52364	B2

ISSUED BY C.H. COHEN X7033 SECTION EQUIP LINES GROUP NO. 332 PL 35

01

NAS 9-1100

GRUMMAN AIRCRAFT ENGINEERING CORP.
CODE IDENT NO. 26512
ENGINEERING ORDER

LDW280-~~52364~~ B3
LDW280A-6926

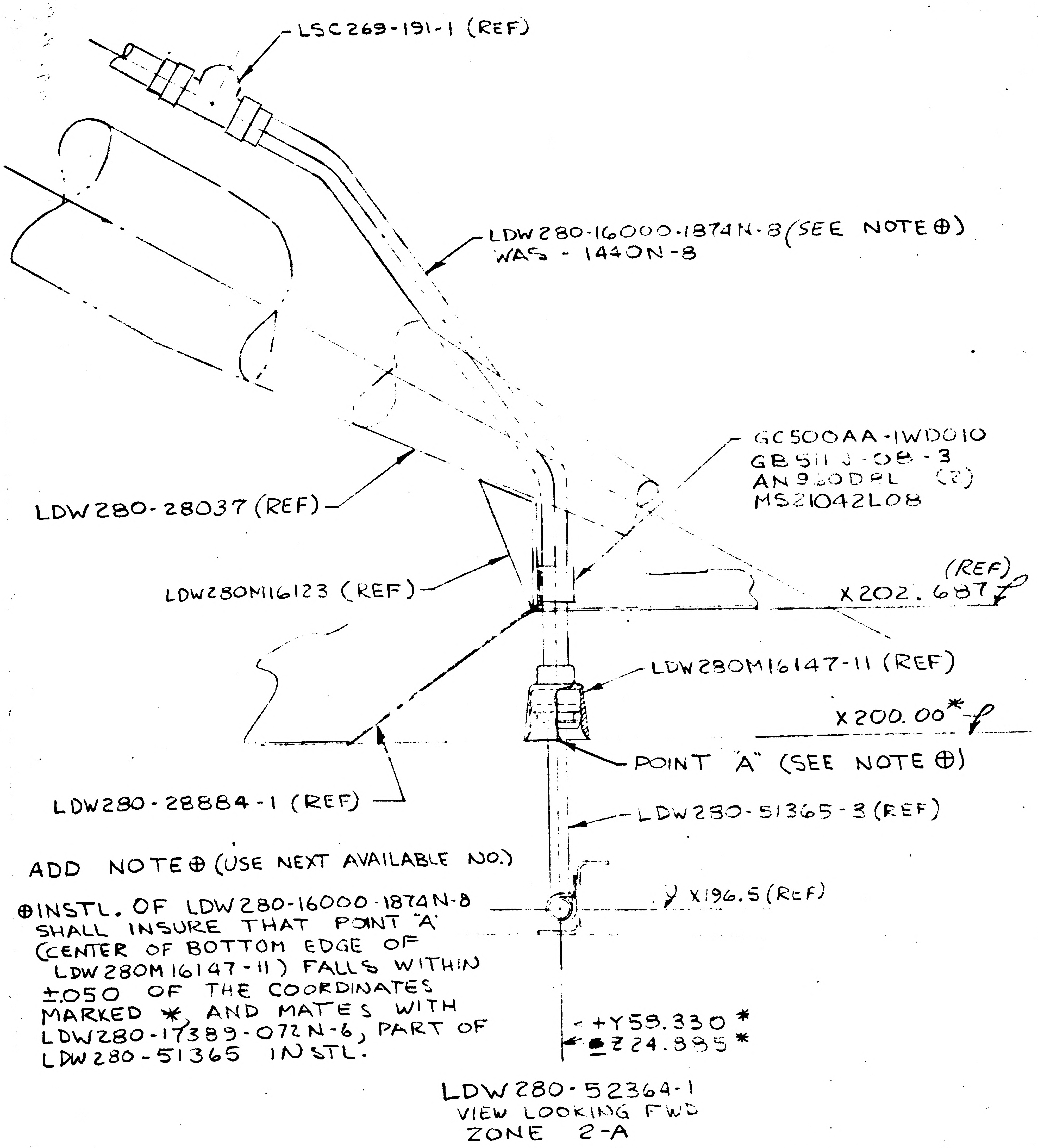

LSC269-191-1 (REF)
LDW280-16000-1874N-8 (SEE NOTE ⊕)
WAS - 1440N-8
GC500AA-1WD010
GB511J-08-3
AN960D8L (2)
MS21042L08
LDW280-28037 (REF)
LDW280M16123 (REF)
(REF)
X202.687 ℓ
LDW280M16147-11 (REF)
X200.00* ℓ
POINT "A" (SEE NOTE ⊕)
LDW280-28884-1 (REF)
LDW280-51365-3 (REF)
X196.5 (REF)
+Y58.330*
Z24.895*

ADD NOTE ⊕ (USE NEXT AVAILABLE NO.)

⊕ INSTL. OF LDW280-16000-1874N-8 SHALL INSURE THAT POINT "A" (CENTER OF BOTTOM EDGE OF LDW280M16147-11) FALLS WITHIN ±.050 OF THE COORDINATES MARKED *, AND MATES WITH LDW280-17389-072N-6, PART OF LDW280-51365 INSTL.

LDW280-52364-1
VIEW LOOKING FWD
ZONE 2-A

DELETE: LDW280-16071-1, DETAIL C-C (ZONE 4-B) & DD (ZONE 4-A)

DETAIL SPEC REQ ☐ CL II ENGRG CHG ☑ CL I ENGRG CHG ☐ LCD-1470

REASON FOR EO: REDESIGN OF NITROGEN PURGE INTERSTAGE FITTING

NOTED

MODEL: LM
LM-2 (32)

✓ ✓

1 VDI

Jap 6/1/67
BJW 6/1/67 6/1/67
Dam 6/5/67 6/6/67
JK 6/7/7

C LINES INSTALLATION NITROGEN PURGE SUB-SYSTEM - A/S LDW280-52364 B3

ISSUED BY C.H. COHEN X1392 SECTION EQUIP. LINES (VD) GROUP NO 332 PL 25

01 NAS 9-1100

RELEASED BY LIAISON

GRUMMAN AIRCRAFT ENGINEERING CORP.
CODE IDENT NO. 26512
ENGINEERING ORDER

DWG. NO. LDW 280-52364	EO NO. B4
CONTROL INFO NO. LM-5-15697	

IN FLD & B/M (ON-1)

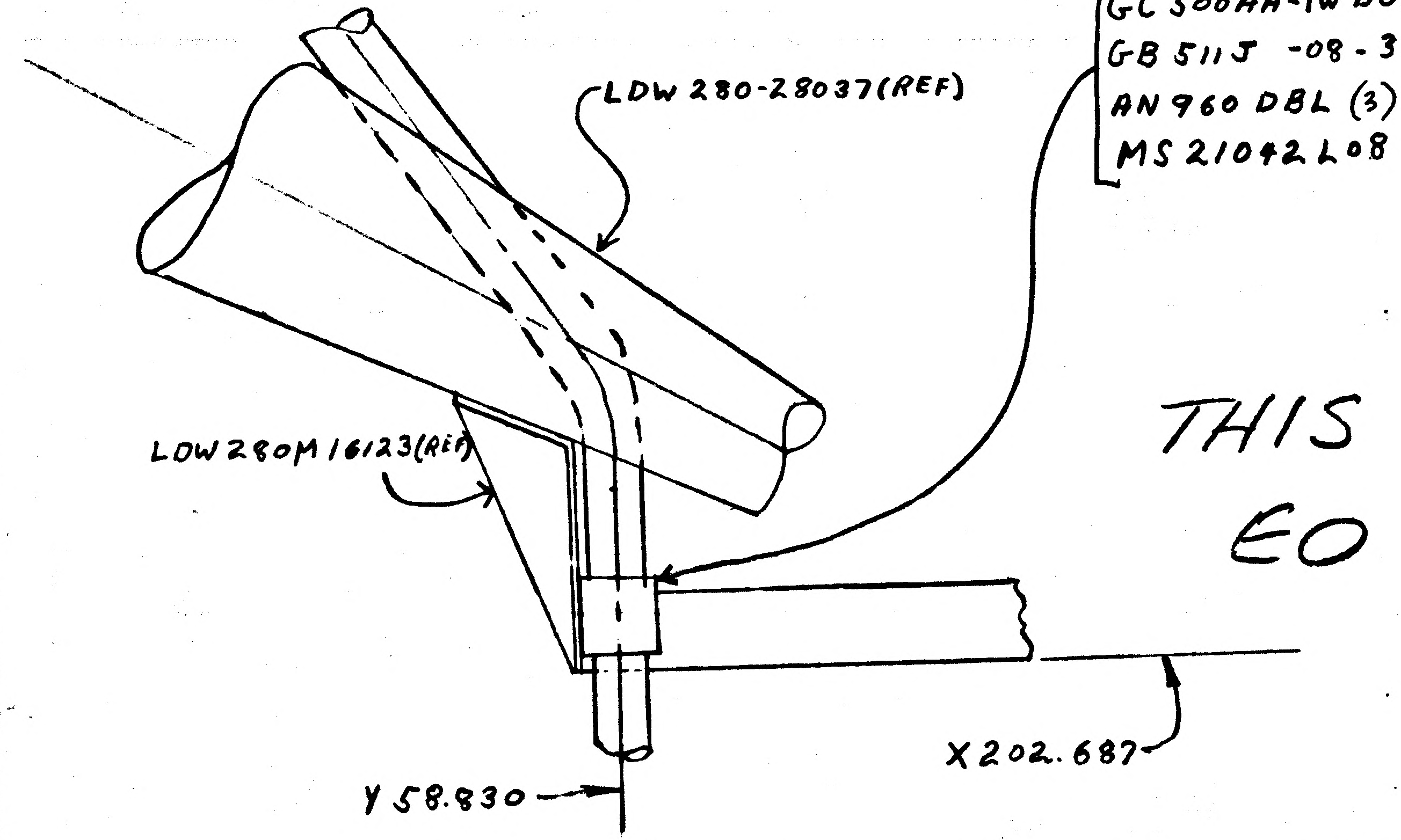

GC500AA-1WD010
GB511J -08-3
AN960 DBL (3)
MS21042L08

S/B

GC500AA-1WD010
GB511J -3-3
AN960 D10L (3)
MS21042L3
DRILL #11 (.190:.196)

THIS A REV OF EO B3

DETAIL SPEC REQ		CL II ENGRG CHG	✓	CL I ENGRG CHG		LCD-1470

REASON FOR EO: REDESIGN OF NITROGEN PURGE INTERCONNECT FITTING

DESCRIPTION OF EO: REF EO B2 IN FLD & B/M (ON-1) DRILL #11 GB511J-3-3 (WAS) GB511J-08-3; AN960D10L AN960DBL; MS21042L3 MS21042L08

GAEC EO RELEASE: C 5

MODEL	PROCURING ACTIVITY NO.	GAEC UNIT NO.	SUB CONTR UNIT NO.
LM		LM2(32)	

DRAWING CHANGE REQD: REVISE DWG	RECORD EO	DISPOSITION OF PARTS: REWORK	SCRAP
✓		✓	

		SUPPORT	RELIAB. GROUP	GROUP LEADER	STRESS GROUP	LIAISON ENGRG	PROJ ENGRG	~~GOVT~~
APPROVED BY	JaP VDI			—		CH		
DATE	7/29/67			—	7/24/67	7-24-67	7/29/67	7/25/67

PRIORITY: C

DRAWING TITLE: LINES INSTALLATION NITROGEN PURGE SUB-SYSTEM - ASCENT STAGE

DRAWING NO.: LDW 280-52364

EO NO.: B4

ISSUED BY LIAISON MDR/ S. GUREVICH X86216
SECTION VDI/ J. WOFF
GROUP NO. 335 PL 25

01

NAS 9-1100

ENG 32.1 REV 3-65 B

GRUMMAN AIRCRAFT ENGINEERING CORP.
CODE IDENT NO. 26512 *

ENGINEERING ORDER

DWG. NO.	LDW280-52364	EO NO.	B5
CONTROL INFO NO.	LDW280A 8745		

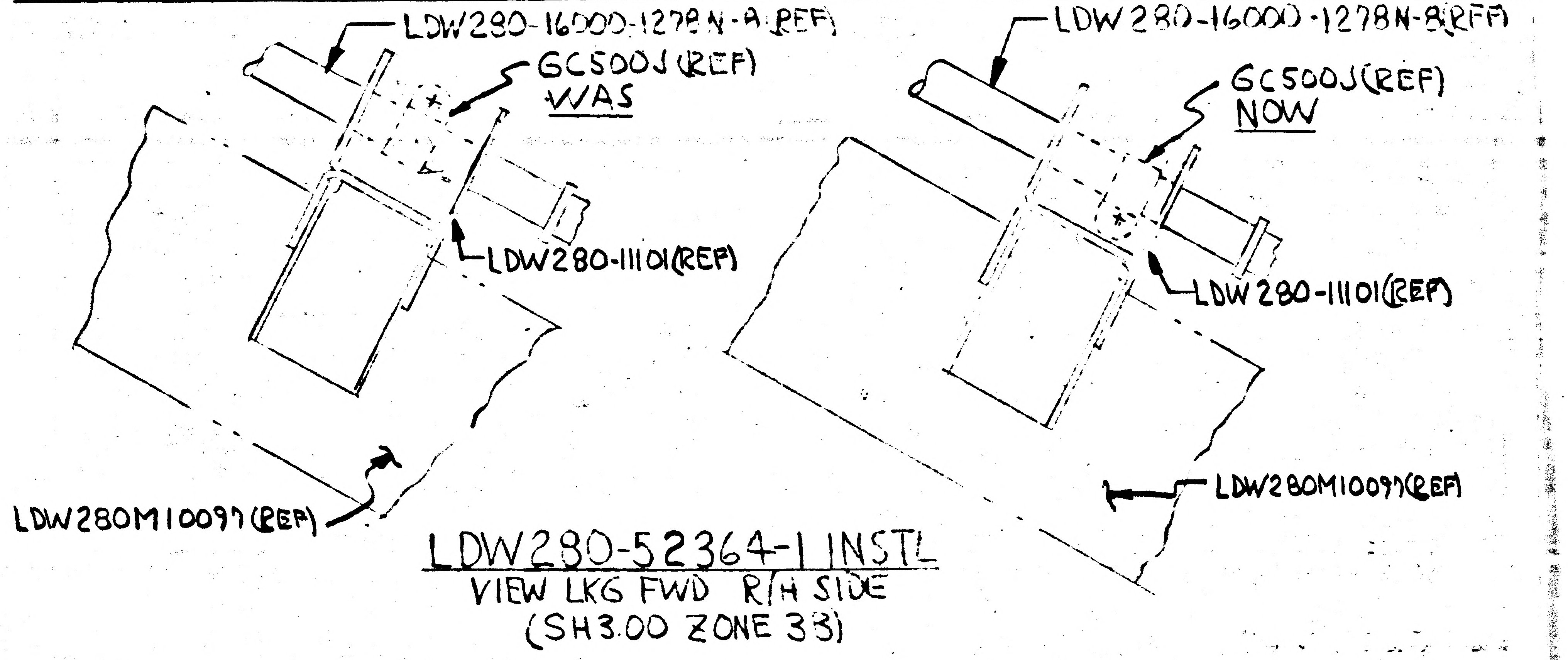
LDW280-16000-1278N-A(REF)
GC500J(REF)
WAS
LDW280-11101(REF)
LDW280M10097(REF)
LDW280-16000-1278N-B(REF)
GC500J(REF)
NOW
LDW280-11101(REF)
LDW280M10097(REF)

LDW280-52364-1 INSTL
VIEW LKG FWD R/H SIDE
(SH3.00 ZONE 33)

THIS EO HAS BEEN ACCOMPLISHED ON VEH.

DETAIL SPEC REQ		CL II ENGRG CHG	✓	CL I ENGRG CHG		LCD 1078 ok

REASON FOR EO: RELOCATION OF CLAMPING HOLE

DESCRIPTION OF EO: ON -1 INSTL ROTATED GC500J 180°

Ⓡ GAEC EO RELEASE: C JK 8/16/7

MODEL	EFFECTIVITY: PROCURING ACTIVITY NO.	GAEC UNIT NO.	SUB CONTR UNIT NO
LM		LM-2(32)	

DRAWING CHANGE REQD: REVISE DWG	RECORD EO	DISPOSITION OF PARTS: REWORK	SCRAP
✓		✓	

APPROVED BY	Jap			Jw	ow		
DATE	8/15/67			8/15/67	8/15/67		8/16/67 8-16-67
	VDI	SUPPORT	RELIAB GROUP	GROUP LEADER	STRESS GROUP	LIAISON ENGRG	PROJ ENGRG

PRIORITY	DRAWING TITLE	DRAWING NO.	EO NO.
C	LINES INSTL NITROGEN PURGE SUB-SYSTEM ASCENT STAGE	LDW280-52364	B5

8-16-67
ISSUED BY J. DE VITA X1153 (8-15-67) SECTION EQUIP LINES (VDI) GROUP NO. 332 PL 25

01 NAS 9-1100

ENG 32.2 REV 3-65

B

GRUMMAN AIRCRAFT ENGINEERING CORP.
CODE IDENT NO. 26512
ENGINEERING ORDER

DWG. NO. LE0280 | EO NO. 708
CONTROL INFO NO. LDW280A9103

ADD THE FOLLOWING NOTE ✱ TO THE DRAWINGS LISTED BELOW:

✱ BONDING TO BE INACCORDANCE WITH LSP 390-001

(✱ = USE NEXT AVAILABLE NOTE NUMBER)

DRAWING NUMBER	EFFECTIVITY	CHANGE NUMBER
✓ LDW280 - 28363	LM-2(32) THRU LM-15(45)	B2
✓ -51365	LM-2(32) THRU LM-15(45)	A8
✓ -51368	LM-2(32)	A9
✓ -51369	LM-2(32), LM-3(33)	A3
✓ -52350	LM-2(32)	D7
✓ -52352		A5
✓ -52353		B2
✓ -52355		C1
✓ -52364		B6
-52609	LM-2(32)	A5
-53352	LM-3(33)	A9
-53353	LM-3(33)	B5
-53355	LM-3(33)	A7
-53364	LM-3(33) THRU LM-15(45)	B7
-53368	LM-3(33)	B7
-53609	LM-3(33)	A7
-54352	LM-4(34) THRU LM-15(45)	B6
-54353		B2
-54355		B5
LDW280 - 54609	LM-4(34) THRU LM-15(45)	B7

DETAIL SPEC REQ ☐	CL II ENGRG CHG ☐	CL I ENGRG CHG ☑	LCD 1961		5

REASON FOR EO: TO UPDATE INSTL DWGS TO CURRENT BONDING REQUIREMENTS

DESCRIPTION OF EO: ADDED NOTE ✱

Ⓡ GAEC C EO RELEASE: JK 9/12/67

MODEL	PROCURING ACTIVITY NO.	GAEC UNIT NO.	SUB CONTR UNIT NO.
LM		NOTED	

DRAWING CHANGE REQD: REVISE DWG ✓ | RECORD EO

DISPOSITION OF PARTS: REWORK NOT | SCRAP REQD

	VDI	SUPPORT	RELIAB. GROUP	GROUP LEADER	STRESS GROUP	LIAISON ENGRG	PROJ ENGRG	
APPROVED BY								
DATE	9/5/67			9/8/67	9/9/67		9/11/67	9-12-67

PRIORITY: C

DRAWING TITLE: LINES ELECTRONIC & PIPING INSTL ASCENT STAGE & DESCENT STAGE

DRAWING NO.: LEO 280

EO NO.: 708

9-14-67
ISSUED BY J. DeVITA X1153 (9-7-67) SECTION EQUIP LINES (VDI) GROUP NO. 332 PL 25

01 NAS 9-1100

ENG 32.1 REV 3-65

GRUMMAN AIRCRAFT ENGINEERING CORP.
CODE IDENT NO. 26512
ENGINEERING ORDER

DWG. NO. LED 280
EO NO. 770
CONTROL INFO NO. LDW280B0077

PARTIAL CANCELLATION

THIS EO CANCELS CHANGES LISTED ON LEO280-708 FOR THE FOLLOWING DRAWINGS: ONLY

CANCELLED CHANGE NO.	DRAWING NUMBER	EFFECTIVITY	CANCELLING CHANGE NO.
A5	LDW280-52352	LM-2(32)	A9 ✓
A5	-52609	LM-2(32)	A7 ✓
A8	-51365	LM-2(32) THRU LM-15(45)	B1 ✓
B6	-52364	LM-2(32)	B7 ✓
A9	-51368	LM-2(32)	B1
A3	LDW280-51369	LM-2(32), LM-3(33)	A4

DETAIL SPEC REQ ☐ CL II ENGRG CHG ☐ CL I ENGRG CHG ✓ LCD 1961

5

REASON FOR EO: BONDING NOTE NOT REQD

DESCRIPTION OF EO: CANCELS NOTED CHG ON LEO280-708.

Ⓡ GAEC C. EO RELEASE

MODEL	PROCURING ACTIVITY NO.	GAEC UNIT NO.	SUB CONTR UNIT NO.
LM		NOTED	

DRAWING CHANGE REQD: REVISE DWG ✓ RECORD EO
DISPOSITION OF PARTS: REWORK ✓ SCRAP

APPROVED BY									
DATE	10/26/67			10/26/67	10/27/67		10/28/67	10/30/67
E	VDI	SUPPORT	RELIAB. GROUP	GROUP LEADER	STRESS GROUP	LIAISON ENGRG	PROJ ENGRG	~~GOVT~~

PRIORITY: C
DRAWING TITLE: LINES INSTL PIPING-ASCENT STAGE & DESCENT STAGE
DRAWING NO. LEO 280
EO NO. 770

11-2-67
ISSUED BY J. DeVITA X1153 (10-25-67) SECTION EQUIP LINES (VDI) GROUP NO. 332 PL 25

01

NAS 9-1100

LDW280-52393 A

MODEL OR END ITEM	NEXT ASSY	MODULE OR SER NO.	REQD PER MODULE OR END ITEM
PART NO.		GAEC SCH NO.	

MODEL OR END ITEM	NEXT ASSY	MODULE OR SER NO.	REQD PER MODULE OR END ITEM
PART NO.		GAEC SCH NO.	

LEM	LDW280-52076	LEM-15(45)	1
		LEM-14(44)	1
		LEM-13(43)	1
		LEM-12(42)	1
		LEM-11(41)	1
		LEM-10(40)	1
		LEM-9(39)	1
		LEM-8(38)	1
		LEM-7(37)	1
		LEM-6(36)	1
		LEM-5(35)	1
		LEM-4(34)	1
		LEM-3(33)	1
LEM	LDW280-52076	LEM-2(32)	1
MODEL OR END ITEM	NEXT ASSY	MODULE OR SER NO.	REQD PER MODULE OR END ITEM
PART NO. LDW280-52393-1		GAEC SCH NO. 32-4	

3

SH REV STATUS: FOR DESCRIPTION OF REV SEE SUBQ SH

SHEET	1.00	1.10	2.00	3.00					
REV	A	A	A	A					
SHEET									
REV									
SHEET									
REV									

LAST SECT LTR USED		GRUMMAN REL^C INFO A		
LAST DASH NO. USED	-1	PRIM NO.	LE(001)	
		215	MP-A	8-5-6

UNLESS OTHERWISE SPECIFIED DIMENSIONS ARE IN INCHES.
TOLERANCE UNLESS SPECIFIED
FRACTIONS - DECIMALS – ANGLES
± 1/64 ±.010 ± 1/2°

ORIG DWG AUTH

DETAIL SPEC REQUIREMENT	
CLASS II ENGRG CHANGE	
CLASS I ENGRG CHANGE	

CONTRACT NO. NAS 9-1100
LINE ITEM # 1
DOCUMENTATION TYPE II

DRAWN BY	N. CIOFFI-7-28-66	RELIABILITY	
LAYOUT BY	VALENTINE		
CHECKED BY	J.S. 7-29-66		
GR.LEADER	E.V. PHILLIPS 8/2		
VEH.DES.INT	[illegible] 8-1		
STRUCTURES	BW 8-2	PROJ ENGR	R M. Carbee (EV) 8-11
STRUCTURES	Hilderman 8/2	REL GROUP	Bott. 8-11-66
WEIGHTS	[illegible] 8-1		

GRUMMAN AIRCRAFT ENGRG CORP
BETHPAGE, L. I., NEW YORK

FITTING ASSEMBLY
ASCENT STAGE-MID SECT.
DROGUE SUPPORT-FWD

SIZE	CODE IDENT NO.		
B	26512	LDW280-52393	A
SCALE NONE		SHEET 1.00 OF 4	

ENG 77.1 12-65

01

NAS 9-1100

REVISIONS

FOR CONTINUATION OF REVISIONS SEE SHEET ______

CHANGE LTR	ITEM NO.	SHEET NO.	ZONE	GRUMMAN INFO ONLY	DET SPEC	CLASS I	CLASS II	ENGRG ORDER	DESCRIPTION	EFFECTIVITY	DISPOSITION OF EXISTING PARTS		CHANGED BY AND DATE	ENGRG APPD	GOVT APPD
											REWORK	SCRAP			
A	1	1.00, 1.10, 200 & 3.00						EO A1	EO A1 INITIAL DRAWING RELEASE. PARTS MADE PER EO.	LEM-2 THRU LEM-15	NOT	REQD	CIOFFI 7-28-66		

CHG APPROVED											
LTR	GROUP LDR	VEC.DES.INT.	STRUCTURES	STRUCTURES	WEIGHTS	RELIABILITY					
A	V. PHILLIBS										

GRUMMAN AIRCRAFT ENGRG CORP., BETHPAGE, L. I., NEW YORK

SIZE	CODE IDENT NO.		
B	26512	LDW280-52393	A
SCALE NONE		SHEET 1.10	

ENG 77.16 3-66

01

NAS 9-1100

QTY PER ASSEMBLY						CODE IDENT	PART NO.	I&T	NOMENCLATURE OR DESCRIPTION	MATERIAL	GOVT SPEC	COML SPEC	STOCK SIZE	PROCESS SYM	FINISH NO.	ZONE
					−1											
					2		MS21042L-08	E	NUT	STD PART						
					2		AN960D8		WASHER	STD PART						
					2		NAS 1132V2		BOLT	STD PART						
					1		LDW280M11124-1		RECEPTACLE	SEE DWG						
					1		LDW280M10840-1		FITTING	SEE DWG						
							LDW280-52393-1	E	FITTING ASS'Y							

SYM OR NO.	PROCESS OR FINISH	GRUMMAN SPEC OR MILITARY SPEC	SYM OR NO.	PROCESS OR FINISH	GRUMMAN SPEC OR MILITARY SPEC	SYM OR NO.	PROCESS OR FINISH	GRUMMAN SPEC OR MILITARY SPEC

I & T: IDENTIFICATION AND TRACEABILITY IN ACCORDANCE WITH : NONE

GRUMMAN AIRCRAFT ENGRG CORP, BETHPAGE, L. I., NEW YORK

SIZE	CODE IDENT NO.		
B	26512	LDW280-52393	A
SCALE NONE		SHEET 2.00	

ENG 77.2 7-65

01

NAS 9-1100

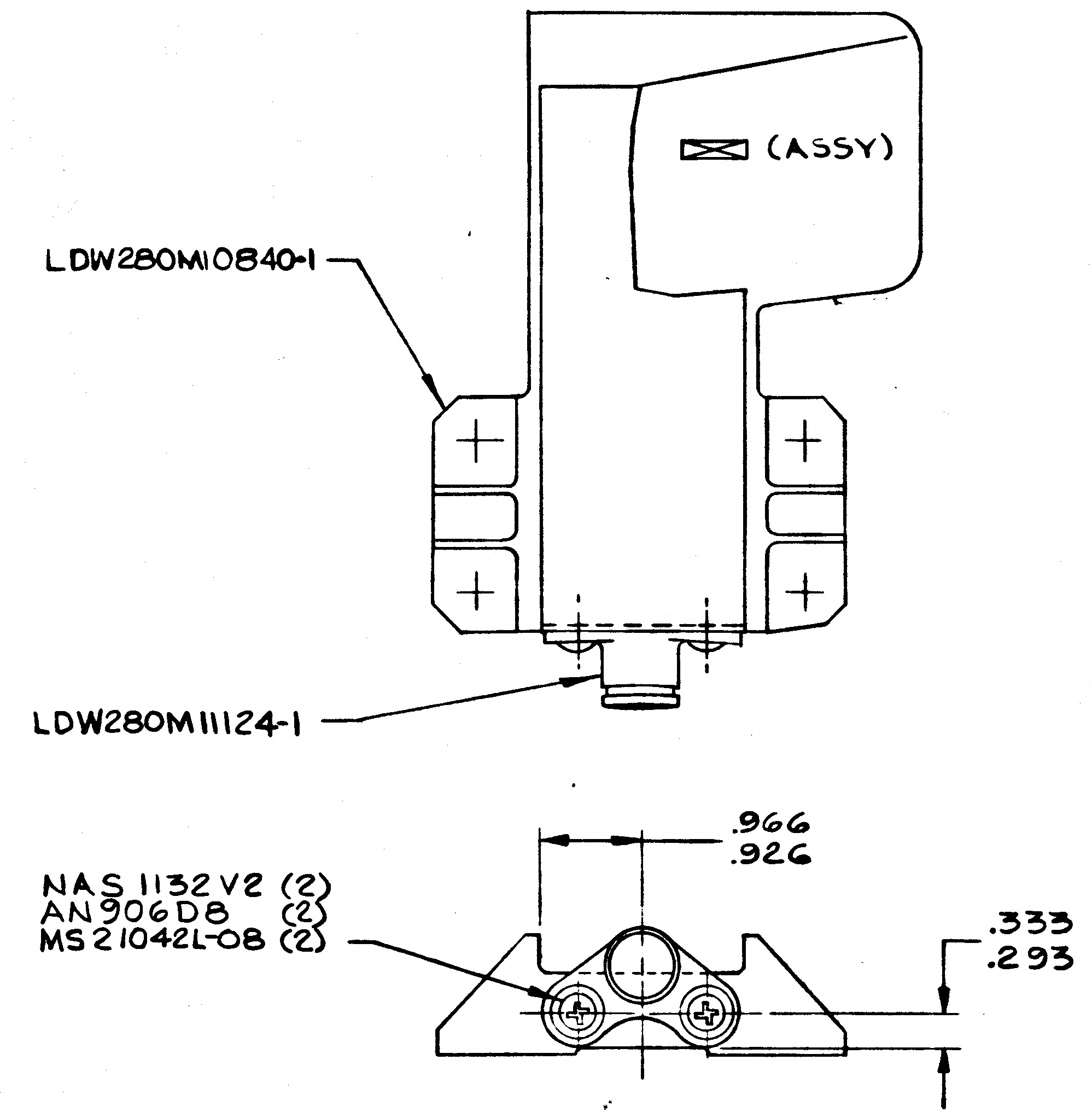

LDW280-52393-1 ASSY

MANUFACTURING OPERATIONS

UNLESS OTHERWISE SPECIFIED
NOTES CHECKED ✓ APPLY TO THIS DWG.

RUBBER STAMP PART NUMBER AND ALL OTHER MARKINGS IN REGION MARKED ⊠ USE BOTH SIDES IF NECESSARY.	✓
FILLET AND INSIDE CORNER RADII TOLERANCES .016R TO .062R ± .010 .063R TO .250R ± .015 OVER .250R ± .030	
DEPTH SHOWN FOR TAPPED HOLES IS FULL THDS. 2-3 IMP THDS. BEYOND PERMISSIBLE.	
EXTERNAL THREAD LENGTH SHOWN INCLUDES 2 IMPERFECT THREADS MAX.	
DO NOT CADMIUM PLATE & PAINT HOLES OR SURFACES MARKED WITH DOUBLE ASTERISK.	
MISMATCH STEP OF ± .005 PERMISSIBLE DUE TO CHANGE OF CUTTERS AT INSIDE INTERSECTING SURFACES.	
DIAMETERS MARKED MUST BE CONCENTRIC WITHIN FULL INDICATOR READING	
HOLES MUST BE KEPT FREE OF CHROME PLATING SOLUTION.	
ALL DIMENSIONS SHOWN TO BE MET AFTER CADMIUM PLATING. THICKNESS OF PLATE .0003 MIN. TO .0005 MAX. MIN. THICKNESS TO BE .0002 ON THREADED AREAS. NO ALLOWANCE FOR PLATING IN HOLES	
125 √ SURFACE ROUGHNESS INCLUDING REAMED HOLES PER MIL-STD-10	
200 √ FOR ALL DRILLED HOLES	
REMOVE ALL BURRS. BREAK ALL EDGES .015-.031	
INSPECTION INFORMATION MINIMUM PERMISSIBLE AVERAGE EDGE DISTANCE MARKED IS	
SYMBOL √ DENOTES SURFACE TO BE MACHINED	
UNLESS OTHERWISE SPECIFIED TOLERANCE ON FLANGES IS ± 1/32	
LENGTHS OF AN, NAS & MS AL ALY RIVETS SHORTER THAN 1 INCH ARE NOT SPECIFIED.	
TOLERANCE ON LOFTED DELINEATIONS IS	

GRUMMAN AIRCRAFT ENGRG CORP., BETHPAGE, L. I., NEW YORK

MODEL OR END ITEM	SIZE	CODE IDENT NO.		
LEM	C	26512	LDW280-52393	A

SCALE - FULL
SHEET 3.00

LDW280-52393 A

LDW280-52393 A

0 1

NAS 9-1100

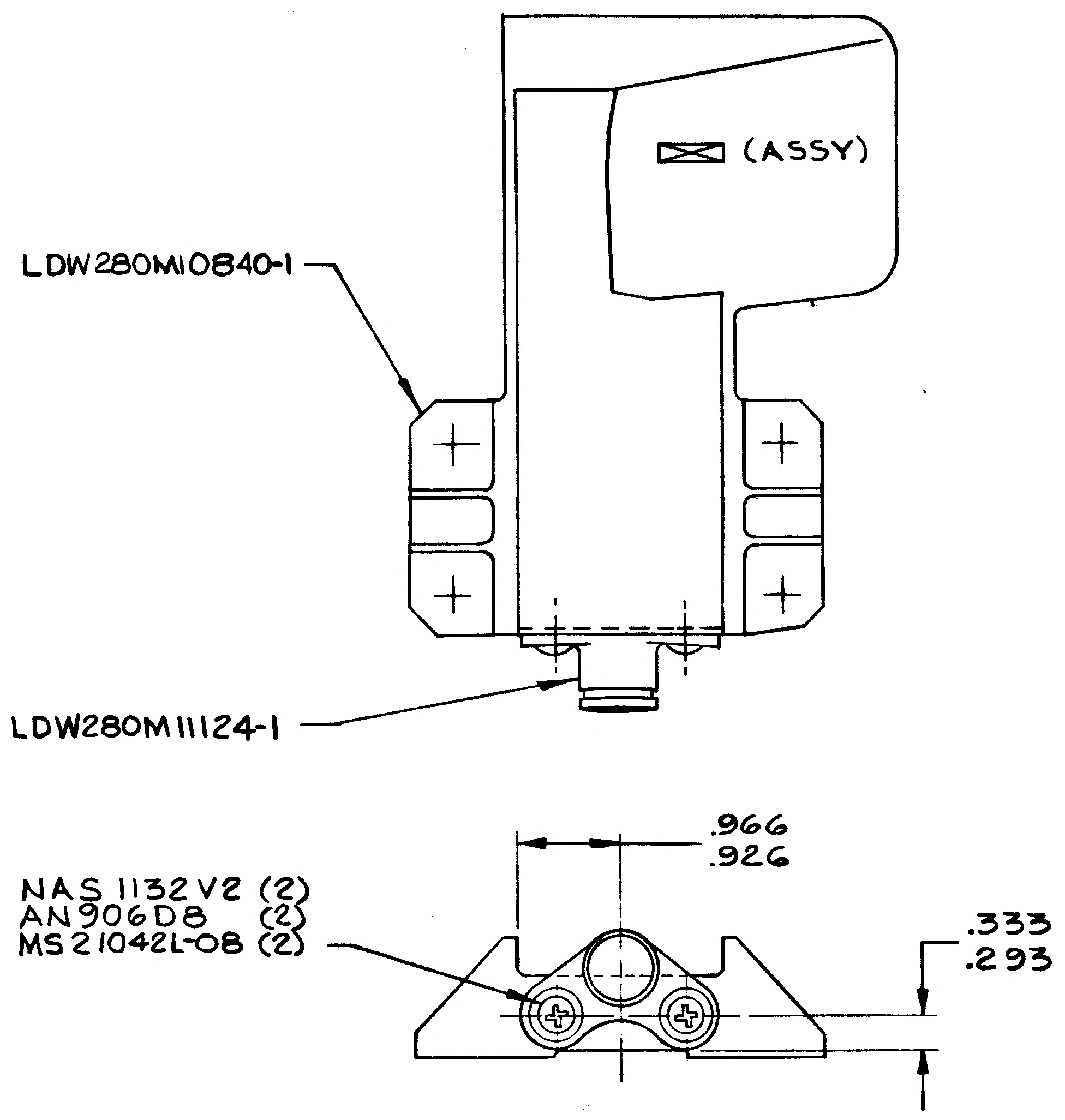

LDW280-52393-1 ASSY

MANUFACTURING OPERATIONS UNLESS OTHERWISE SPECIFIED NOTES CHECKED √ APPLY TO THIS DWG.	
RUBBER STAMP PART NUMBER AND ALL OTHER MARKINGS IN REGION MARKED ☒ USE BOTH SIDES IF NECESSARY.	√
FILLET AND INSIDE CORNER RADII TOLERANCES .016R TO .062R ± .010 .063R TO .250R ± .015 OVER .250R ± .030	
DEPTH SHOWN FOR TAPPED HOLES IS FULL THDS. 2-3 IMP THDS. BEYOND PERMISSIBLE.	
EXTERNAL THREAD LENGTH SHOWN INCLUDES 2 IMPERFECT THREADS MAX.	
DO NOT CADMIUM PLATE & PAINT HOLES OR SURFACES MARKED WITH DOUBLE ASTERISK.	
MISMATCH STEP OF ± .005 PERMISSIBLE DUE TO CHANGE OF CUTTERS AT INSIDE INTERSECTING SURFACES.	
DIAMETERS MARKED MUST BE CONCENTRIC WITHIN FULL INDICATOR READING	
HOLES MUST BE KEPT FREE OF CHROME PLATING SOLUTION.	
ALL DIMENSIONS SHOWN TO BE MET AFTER CADMIUM PLATING. THICKNESS OF PLATE .0003 MIN. TO .0005 MAX. MIN. THICKNESS TO BE .0002 ON THREADED AREAS. NO ALLOWANCE FOR PLATING IN HOLES	
125 SURFACE ROUGHNESS INCLUDING REAMED HOLES PER MIL-STD-10	
200 FOR ALL DRILLED HOLES	
REMOVE ALL BURRS. BREAK ALL EDGES .015-.031	
INSPECTION INFORMATION MINIMUM PERMISSIBLE AVERAGE EDGE DISTANCE MARKED IS	
SYMBOL ƒ DENOTES SURFACE TO BE MACHINED	
UNLESS OTHERWISE SPECIFIED TOLERANCE ON FLANGES IS ± 1/32	
LENGTHS OF AN, NAS & MS AL ALY RIVETS SHORTER THAN 1 INCH ARE NOT SPECIFIED.	
TOLERANCE ON LOFTED DELINEATIONS IS	

	GRUMMAN AIRCRAFT ENGRG CORP., BETHPAGE, L. I., NEW YORK			
LEM	SIZE C	CODE IDENT NO. 26512	LDW280-52393	A
MODEL OR END ITEM	SCALE - FULL		SHEET 3.00	

01 NAS 9-1100

ENG 32.1 REV 3-65

GRUMMAN AIRCRAFT ENGINEERING CORP.
CODE IDENT NO. 26512
ENGINEERING ORDER *

DWG. NO. LDW280-52393
EO NO. B1
CONTROL INFO NO. LDW280A-8947

RESTRICT N/A OF -1 TO LM-2 & LM-3 ON LDW280-52076
(WAS) LM-2 THRU LM-15 ON LDW280-52076

DETAIL SPEC REQ		CL II ENGRG CHG		CL I ENGRG CHG	✓	LCD 1758 CCA-620	3

REASON FOR EO: TO PROVIDE FOR NEW LM/CM UMBILICAL STOWAGE

DESCRIPTION OF EO: ON-1
REMOVED LM-4 THRU LM-15 REQ'MTS

CN (F) GAEC EO RELEASE: JK 9/19/67

MODEL	PROCURING ACTIVITY NO.	GAEC UNIT NO.	SUB CONTR UNIT NO.
LM		LM-4 (34)	
		THRU	
LM		LM-15 (45)	

DRAWING CHANGE REQD		DISPOSITION OF PARTS	
✓			✓
REVISE DWG	RECORD EO	REWORK	SCRAP

APPROVED BY	Jap			FDR			Dam	Botti
DATE	9/15/67			9/15	9-15		9/16/67	9-19-67
T	VDI	SUPPORT	RELIAB. GROUP	GROUP LEADER	STRESS GROUP	LIAISON ENGRG	PROJ ENGRG	

PRIORITY	DRAWING TITLE	DRAWING NO.	EO NO.
C	FITTING ASSEMBLY - ASCENT STAGE - MID SECT. DROGUE SUPT. - FWD	LDW280-52393	B1

9/21
ISSUED BY VALENTINE 8/28/67 X7033 SECTION VEH DES INT. GROUP NO. 335 PL 25

ENG 32.1 REV 3-65

GRUMMAN AIRCRAFT ENGINEERING CORP.
CODE IDENT NO. 26512
ENGINEERING ORDER

DWG. NO. LDW280-52393
EO NO. B2
CONTROL INFO NO. LDW280B6384

RESTRICT -1 TO LM-2(32) EFFECTIVITY
WAS: LM-2(32) & LM-3(33)

LFM

DETAIL SPEC REQ	☐	CL II ENGRG CHG	☐	CL I ENGRG CHG	☑	LCD#3644 PKG #10	(6)

REASON FOR EO: TO COMPLY WITH ICD MH 01-05127-116 REV D

DESCRIPTION OF EO: RESTRICTED EFFECTIVITY OF -1 TO LM-2 BY REMOVING LM-3

GAEC EO RELEASE: EK JK 1/3/9 1-2-69

MODEL	~~PROCURING ACTIVITY NO.~~ E1	GAEC UNIT NO.	SUB CONTR UNIT NO.
LM	LFM# 318	LM3(33)	

DRAWING CHANGE REQD: REVISE DWG ✓ | RECORD EO

DISPOSITION OF PARTS: REWORK | SCRAP -1

	VD1	~~SUPPORT~~	RELIAB. GROUP	GROUP LEADER	STRESS GROUP	LIAISON ENGRG	PROJ ENGRG	~~CONT~~
APPROVED BY	JHS			TCR	CW			wm Bowman
DATE	1-2-69			1-2-69	1/2/69		1/2/69	1-3-69

PRIORITY: C

DRAWING TITLE: FITTING ASSEMBLY - ASCENT STAGE - MID SECT - DROGUE SUPT - FWD

DRAWING NO.: LDW280-52393

EO NO.: B2

10369
ISSUED BY P. CICCOTTO 11-26-68 SECTION VD1 GROUP NO. 335 PL 25

01

NAS 9-1100

LDW280-52394 A

MODEL OR END ITEM	NEXT ASSY	MODULE OR SER NO.	REQD PER MODULE OR END ITEM
LEM	LDW280-52076	LEM-15(45)	1
		LEM-14(44)	1
		LEM-13(43)	1
		LEM-12(42)	1
		LEM-11(41)	1
		LEM-10(40)	1
		LEM-9(39)	1
		LEM-8(38)	1
		LEM-7(37)	1
		LEM-6(36)	1
		LEM-5(35)	1
		LEM-4(34)	1
		LEM-3(33)	1
LEM	LDW280-52076	LEM-2(32)	1
PART NO. LDW280-52394-1		GAEC SCH NO. 32-4	

3

SH REV STATUS: FOR DESCRIPTION OF REV SEE SUBQ SH

SHEET	1.00	1.10	2.00	3.00
REV	A	A	A	A

LAST SECT LTR USED

LAST DASH NO. USED —1

GRUMMAN REL INFO
PRIM NO. 215 | LE(001) MP-A | 8-9-6

UNLESS OTHERWISE SPECIFIED DIMENSIONS ARE IN INCHES.
TOLERANCE UNLESS SPECIFIED FRACTIONS - DECIMALS — ANGLES ± 1/64 ±.010 ± 1/2°

ORIG DWG AUTH
DETAIL SPEC REQUIREMENT
CLASS II ENGRG CHANGE
CLASS I ENGRG CHANGE

CONTRACT NO. NAS 9-1100
LINE ITEM * 1
DOCUMENTATION TYPE II

DRAWN BY N. CIOFFI
LAYOUT BY VALENTINE
CHECKED BY EG 7-29-66
GR. LEADER —
VEH. DES. INT. RVPHILLIPS 8/3
STRUCTURES 8-3
STRUCTURES Hilderman 8-4
WEIGHTS 8-17
RELIABILITY
PROJ ENGR R.m. Carbee 8/9
REL GROUP 8-17-66

GRUMMAN AIRCRAFT ENGRG CORP
BETHPAGE, L. I., NEW YORK

FITTING ASSEMBLY
ASCENT STAGE-MID SECT.
DROGUE SUPPORT L. H.

SIZE B
CODE IDENT NO. 26512
LDW280-52394 A
SCALE NONE
SHEET 1.00 OF 4

ENG 77.1 12-65

01

NAS 9-1100

REVISIONS FOR CONTINUATION OF REVISIONS SEE SHEET ______

CHANGE LTR	ITEM NO.	SHEET NO.	ZONE	GRUMMAN INFO ONLY	DET SPEC	CLASS I	CLASS II	ENGRG ORDER	DESCRIPTION	EFFECTIVITY	DISPOSITION OF EXISTING PARTS		CHANGED BY AND DATE	ENGRG APPD	GOVT APPD
											REWORK	SCRAP			
A	1	1.00, 1.10, 200 & 3.00		Ⓡ			✓	EO A1	EO A1 INITIAL DRAWING RELEASE. PARTS MADE PER E.O. EG	LEM-2 THRU LEM-15	NOT	REQD	CIOFFI 7-28-66		

CHG APPROVED	LTR	GROUP LDR	GR. LEADER	VEH. DES. INT	STRUCTURES	STRUCTURES	WEIGHTS	RELIABILITY				
	A	—	—	R J PHILLIPS 8/3								

GRUMMAN AIRCRAFT ENGRG CORP., BETHPAGE, L. I., NEW YORK

SIZE	CODE IDENT NO.		
B	26512	LDW280-52394	A
SCALE NONE			SHEET 1.10

ENG 77.16 3-66

01

NAS 9-1100

QTY PER ASSEMBLY											
-1	CODE IDENT	PART NO.	I&T	NOMENCLATURE OR DESCRIPTION	MATERIAL	GOVT SPEC	COML SPEC	STOCK SIZE	PROCESS SYM	FINISH NO.	ZONE
2		MS21042L-08	E	NUT	STD PART						
2		AN960D8		WASHER	STD PART						
2		NAS1132V2		BOLT	STD PART						
1		LDW280M11124-1		RECECPTACLE	SEE DWG						
1		LDW280M10844-1		FITTING	SEE DWG						
		LDW280-52394-1	E	FITTING ASSY.							

SYM OR NO.	PROCESS OR FINISH	GRUMMAN SPEC OR MILITARY SPEC	SYM OR NO.	PROCESS OR FINISH	GRUMMAN SPEC OR MILITARY SPEC	SYM OR NO.	PROCESS OR FINISH	GRUMMAN SPEC OR MILITARY SPEC

I&T: IDENTIFICATION AND TRACEABILITY IN ACCORDANCE WITH : NONE

GRUMMAN AIRCRAFT ENGRG CORP, BETHPAGE, L. I., NEW YORK

SIZE B
CODE IDENT NO. 26512
LDW280-52394
A
SCALE NONE
SHEET 2.00

ENG 77.2 7-65

01

NAS 9-1100

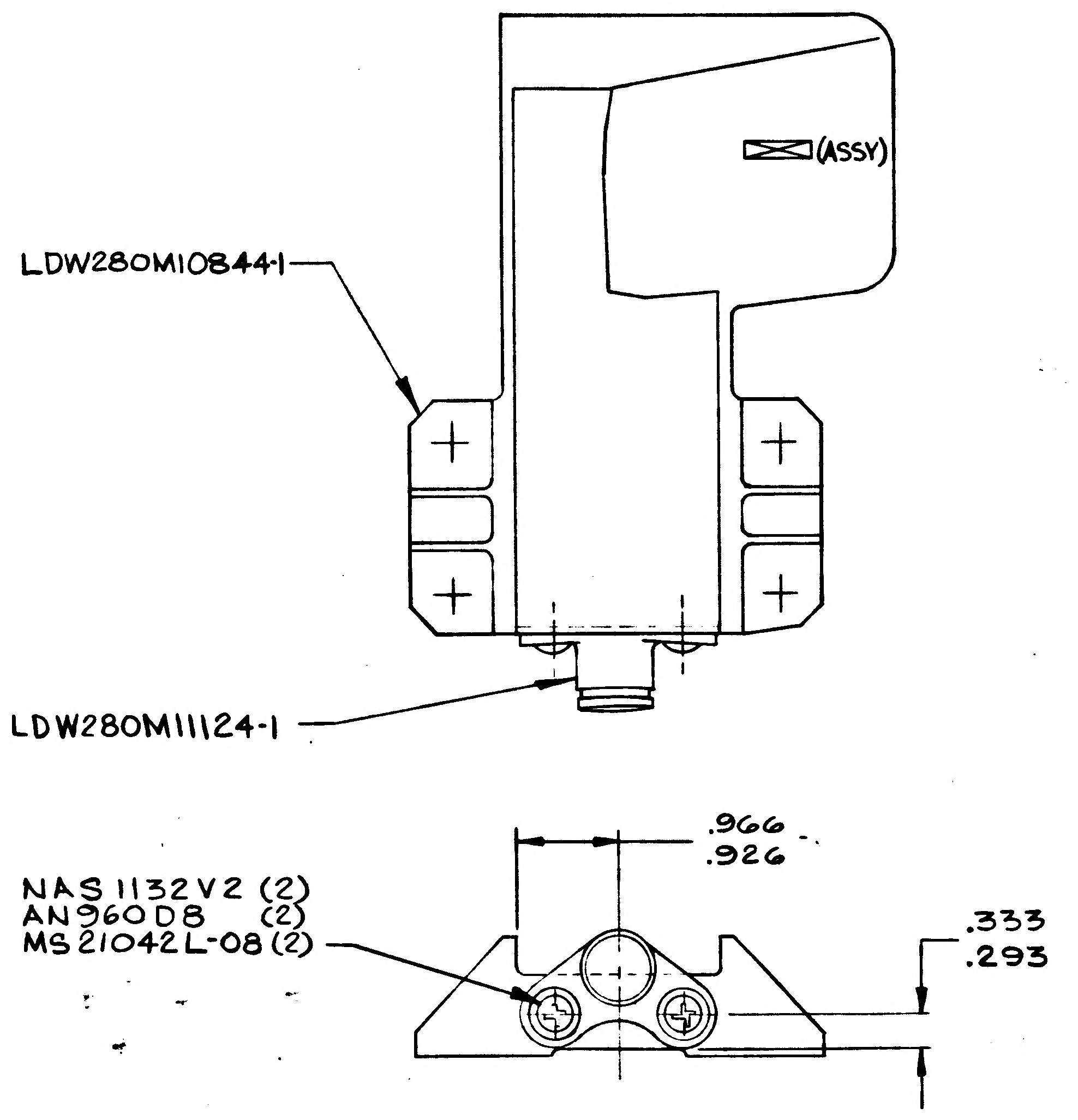

LDW280-52394-1 ASSY

MANUFACTURING OPERATIONS
UNLESS OTHERWISE SPECIFIED
NOTES CHECKED ✓ APPLY TO THIS DWG.

RUBBER STAMP PART NUMBER AND ALL OTHER MARKINGS IN REGION MARKED ▭ USE BOTH SIDES IF NECESSARY.	✓
FILLET AND INSIDE CORNER RADII TOLERANCES .016R TO .062R ± .010 .063R TO .250R ± .015 OVER .250R ± .030	
DEPTH SHOWN FOR TAPPED HOLES IS FULL THDS. 2-3 IMP THDS. BEYOND PERMISSIBLE.	
EXTERNAL THREAD LENGTH SHOWN INCLUDES 2 IMPERFECT THREADS MAX.	
DO NOT CADMIUM PLATE & PAINT HOLES OR SURFACES MARKED WITH DOUBLE ASTERISK.	
MISMATCH STEP OF ± .005 PERMISSIBLE DUE TO CHANGE OF CUTTERS AT INSIDE INTERSECTING SURFACES.	
DIAMETERS MARKED MUST BE CONCENTRIC WITHIN FULL INDICATOR READING	
HOLES MUST BE KEPT FREE OF CHROME PLATING SOLUTION.	
ALL DIMENSIONS SHOWN TO BE MET AFTER CADMIUM PLATING. THICKNESS OF PLATE .0003 MIN. TO .0005 MAX. MIN. THICKNESS TO BE .0002 ON THREADED AREAS. NO ALLOWANCE FOR PLATING IN HOLES	
$\overline{125}\sqrt{}$ SURFACE ROUGHNESS INCLUDING REAMED HOLES PER MIL-STD-10	
$\overline{200}\sqrt{}$ FOR ALL DRILLED HOLES	
REMOVE ALL BURRS. BREAK ALL EDGES .015-.031	
INSPECTION INFORMATION MINIMUM PERMISSIBLE AVERAGE EDGE DISTANCE MARKED IS	
SYMBOL f DENOTES SURFACE TO BE MACHINED	
UNLESS OTHERWISE SPECIFIED TOLERANCE ON FLANGES IS ± 1/32	
LENGTHS OF AN, NAS & MS AL ALY RIVETS SHORTER THAN 1 INCH ARE NOT SPECIFIED.	
TOLERANCE ON LOFTED DELINEATIONS IS	

GRUMMAN AIRCRAFT ENGRG CORP., BETHPAGE, L. I., NEW YORK

MODEL OR END ITEM	SIZE	CODE IDENT NO.		
LEM	C	26512	LDW280-52394	A
	SCALE - FULL		SHEET 3.00	

01

NAS 9-1100

ENG 32.1 REV 3-65

GRUMMAN AIRCRAFT ENGINEERING CORP.
CODE IDENT NO. 26512
ENGINEERING ORDER

DWG. NO. LDW280-52394
EO NO. B1
CONTROL INFO NO. LDW280A8948

RESTRICT N/A OF-1 TO LM-2 & LM-3 ON LDW280-52076
(WAS) LM-2 THRU LM-15 ON LDW280-52076

DETAIL SPEC REQ		CL II ENGRG CHG		CL I ENGRG CHG	✓	LCD 1758 CCA-620

3

REASON FOR EO: TO PROVIDE FOR NEW LM/CM UMBILICAL STOWAGE

DESCRIPTION OF EO: ON-1
REMOVED LM-4 THRU LM-15 REQ'MTS

GAEC EO RELEASE: JK 9/19/67

MODEL	EFFECTIVITY		
	PROCURING ACTIVITY NO.	GAEC UNIT NO.	SUB CONTR UNIT NO.
LM		LM-4 (34)	
		THRU	
LM		LM-15 (45)	

DRAWING CHANGE REQD		DISPOSITION OF PARTS		APPROVED BY								
REVISE DWG	RECORD EO	REWORK	SCRAP	DATE	9/15/67			9/15/67	9-15		9/16/67	9-19-67
✓			✓	T	VDI	SUPPORT	RELIAB. GROUP	GROUP LEADER	STRESS GROUP	LIAISON ENGRG	PROJ ENGRG	

PRIORITY	DRAWING TITLE	DRAWING NO.	EO NO.
C	FITTING ASSEMBLY-ASCENT STAGE-MID SECT-DROGUE SUPT. L.H.	LDW280-52394	B1

9/21
ISSUED BY VALENTINE 8/28/67 x7033 SECTION VEH. DES. INT. GROUP NO. 335 PL 25

01
NAS 9-1100

ENG 32.1 REV 3-65

GRUMMAN AIRCRAFT ENGINEERING CORP.
CODE IDENT NO. 26512
ENGINEERING ORDER

DWG. NO. LDW280-52394
EO NO. B2
CONTROL INFO NO. LDW280B6385

RESTRICT -1 TO LM-2(32) EFFECTIVITY
WAS: LM-2(32) & LM-3(33)

LFM

DETAIL SPEC REQ		CL II ENGRG CHG		CL I ENGRG CHG	✓ LCD # 3644 PKG # 10	(5)

REASON FOR EO: TO COMPLY WITH ICD MH01-05127-116 REV D

DESCRIPTION OF EO: RESTRICTED EFFECTIVITY OF -1 TO LM-2 BY REMOVING LM-3

GAEC EO RELEASE: 1/3/69

MODEL	~~PROCURING ACTIVITY NO.~~ E1	GAEC UNIT NO.	SUB CONTR UNIT NO.
LM	LFM # 318	LM3(33)	

DRAWING CHANGE REQD: REVISE DWG ✓ | RECORD EO

DISPOSITION OF PARTS: REWORK | SCRAP -1

APPROVED BY					cw			Bauman
DATE	1/2/69			1/2/69	1/2/69		1/2/69	1-3-69
	VDI	~~SUPPORT~~	RELIAB. GROUP	GROUP LEADER	STRESS GROUP	LIAISON ENGRG	PROJ ENGRG	~~CHIEF~~

PRIORITY: C

DRAWING TITLE: FITTING ASSEMBLY-ASCENT STAGE-MID SECT-DROGUE SUPT L.H.

DRAWING NO.: LDW280-52394

EO NO.: B2

10369
ISSUED BY P. CICCOTTO 11-26-68 SECTION VDI GROUP NO. 335 PL 25

01 NAS 9-1100

MODEL OR END ITEM	NEXT ASSY	MODULE OR SER NO.	REQD PER MODULE OR END ITEM	MODEL OR END ITEM	NEXT ASSY	MODULE OR SER NO.	REQD PER MODULE OR END ITEM	MODEL OR END ITEM	NEXT ASSY	MODULE OR SER NO.	REQD PER MODULE OR END ITEM
								LEM	LDW280-52002	LEM-2(32)	1
PART NO.		GAEC SCH NO.		PART NO.		GAEC SCH NO.		PART NO. LDW280-52401-1		GAEC SCH NO. 33-1	

(3)

SH REV STATUS: FOR DESCRIPTION OF REV SEE SUBQ SH

SHEET	1		2	3						
REV										
SHEET										
REV										
SHEET										
REV										

LAST SECT LTR USED	C-C	GRUMMAN REL INFO
LAST DASH NO. USED	-1	PRIM NO. 215 LC(001) PP12

UNLESS OTHERWISE SPECIFIED DIMENSIONS ARE IN INCHES.
TOLERANCE UNLESS SPECIFIED
FRACTIONS - DECIMALS - ANGLES
± 1/32 ±.020 ± 1/2°
ORIG DWG AUTH
DETAIL SPEC REQUIREMENT
CLASS II ENGRG CHANGE
CLASS I ENGRG CHANGE

CONTRACT NO. NAS 9-1100
LINE ITEM 1
DOCUMENTATION TYPE II

DRAWN BY	W. J. DWYER 1-6-66	RELIABILITY	—
LAYOUT BY	G. KATZ 1-12-66		
CHECKED BY	EG 1-12-66		
GP LEADER	1-27-66		
VDI	1/27/66		
STRUCTURES	JV 1/27	PROJ ENGR	1/31/66
STRUCTURES	H. Alderman 1-27	REL GROUP	2/2/66
WEIGHTS	1-27		

GRUMMAN AIRCRAFT ENGRG CORP
BETHPAGE, L. I., NEW YORK

STRUCTURAL INSTALLATION
ASCENT STAGE
AFT EQUIPMENT BAY

SIZE	CODE IDENT NO.	
B	26512	LDW280-52401
SCALE	NONE	SHEET 1 OF 3

ENG 77.1 9-64

01

NAS 9-1100

16		NAS654V7	E	BOLT	STD PART						
4		NAS654V6		BOLT							
12		NAS1132V14		BOLT							
8		NAS1132V13		BOLT							
20		MS21042L4		NUT							
20		MS21042L08		NUT							
24		AN960D8L		WASHER							
16		AN960D8		WASHER							
40		AN960D416L		WASHER	STD PART						
2		LDW280M14027-1		ROD END	SEE DWG						6D
8		LDW280M14003-1		ROD END							3D
1		LDW280-28434-4		TANK SUPPT INSTL							7B
1		LDW280-28434-3		TANK SUPPT INSTL							7B
2		LDW280-28427-1		TUBE ASSY							5A
2		LDW280-28426-1		TUBE ASSY							4A
2		LDW280-23425-7		TUBE ASSY							5B
2		LDW280-23425-5		TUBE ASSY							4C
2		LDW280-23425-3		TUBE ASSY							5D
1		LDW280-52405		RACK ASSY	SEE DWG						3C
		LDW280-52401-1	E	STRUCTURAL INSTL					NONE	NONE	
-1 QTY PER ASSEMBLY	CODE IDENT	PART NO.	I&T	NOMENCLATURE OR DESCRIPTION	MATERIAL	GOVT SPEC	COML SPEC	STOCK SIZE	PROCESS SYM	FINISH NO.	ZONE

SYM OR NO.	PROCESS OR FINISH	GRUMMAN SPEC OR MILITARY SPEC	SYM OR NO.	PROCESS OR FINISH	GRUMMAN SPEC OR MILITARY SPEC	SYM OR NO.	PROCESS OR FINISH	GRUMMAN SPEC OR MILITARY SPEC

I & T: IDENTIFICATION AND TRACEABILITY IN ACCORDANCE WITH :
NONE

GRUMMAN AIRCRAFT ENGRG CORP, BETHPAGE, L. I., NEW YORK

SIZE	CODE IDENT NO.	
B	26512	LDW280-52401

SCALE NONE SHEET 2

ENG 77.2 7-65

01

NAS 9-1100

9 8 7 6 5

D
C
B
A

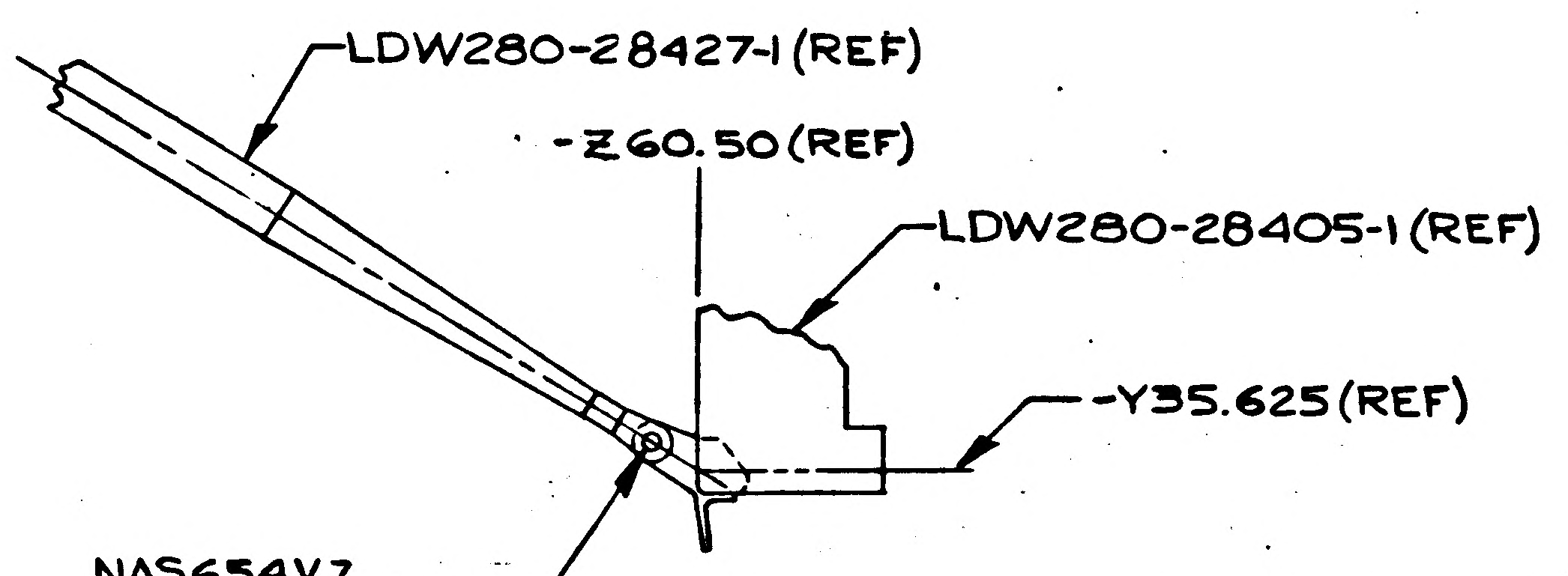

LDW280-28427-1(REF)
-Z60.50(REF)
LDW280-28405-1(REF)
-Y35.625(REF)
NAS654V7
AN960D416L(2)
MS21042L4
SEE NOTE 1

VIEW B-B
LH (SHOWN) RH (OPP)

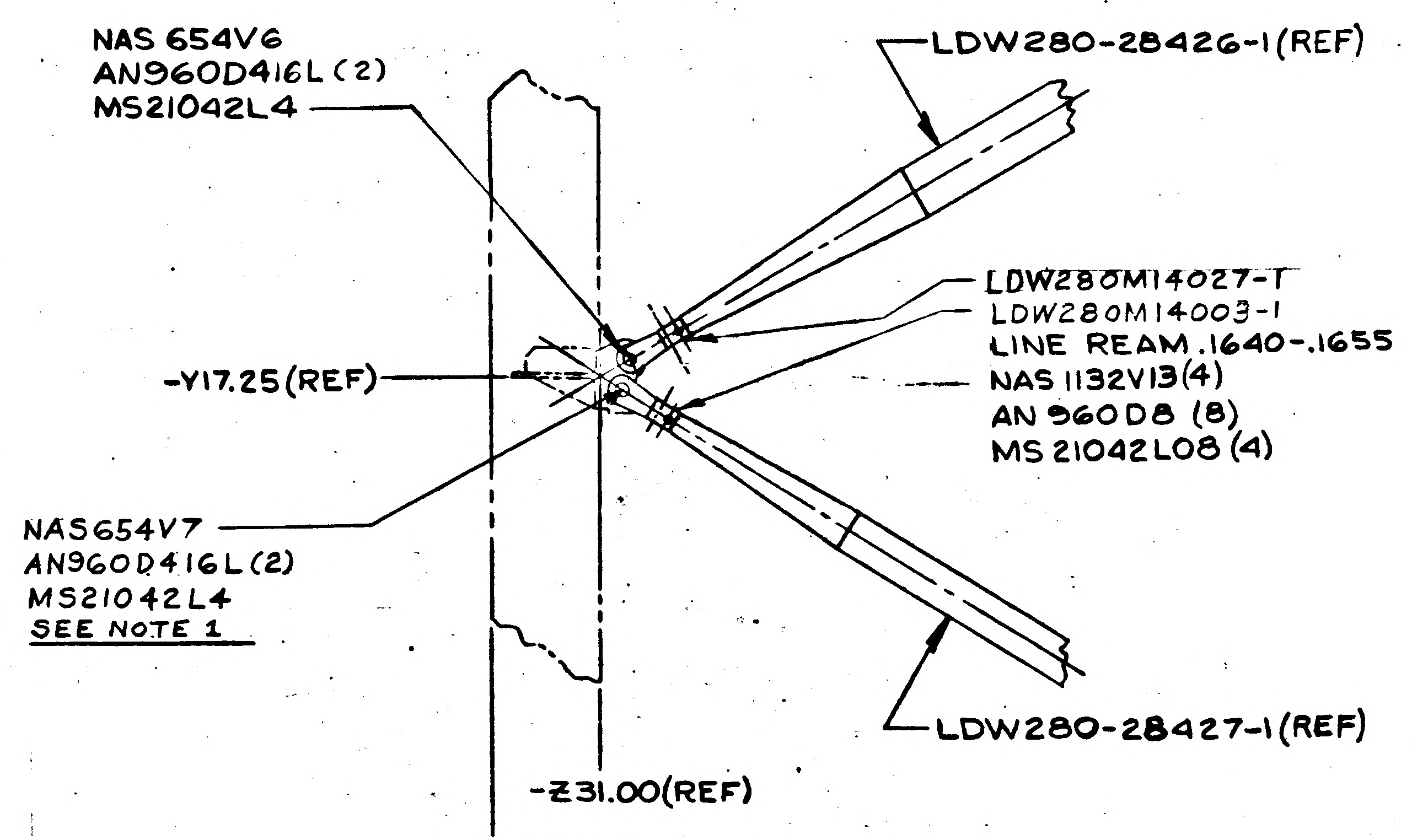

NAS 654V6
AN960D416L(2)
MS21042L4
LDW280-28426-1(REF)
LDW280M14027-1
LDW280M14003-1
LINE REAM .1640-.1655
NAS 1132V13(4)
AN 960D8 (8)
MS 21042L08 (4)
-Y17.25(REF)
NAS654V7
AN960D416L(2)
MS21042L4
SEE NOTE 1
LDW280-28427-1(REF)
-Z31.00(REF)
-Z27.00(REF)

VIEW A-A
LH (SHOWN) RH (OPP)

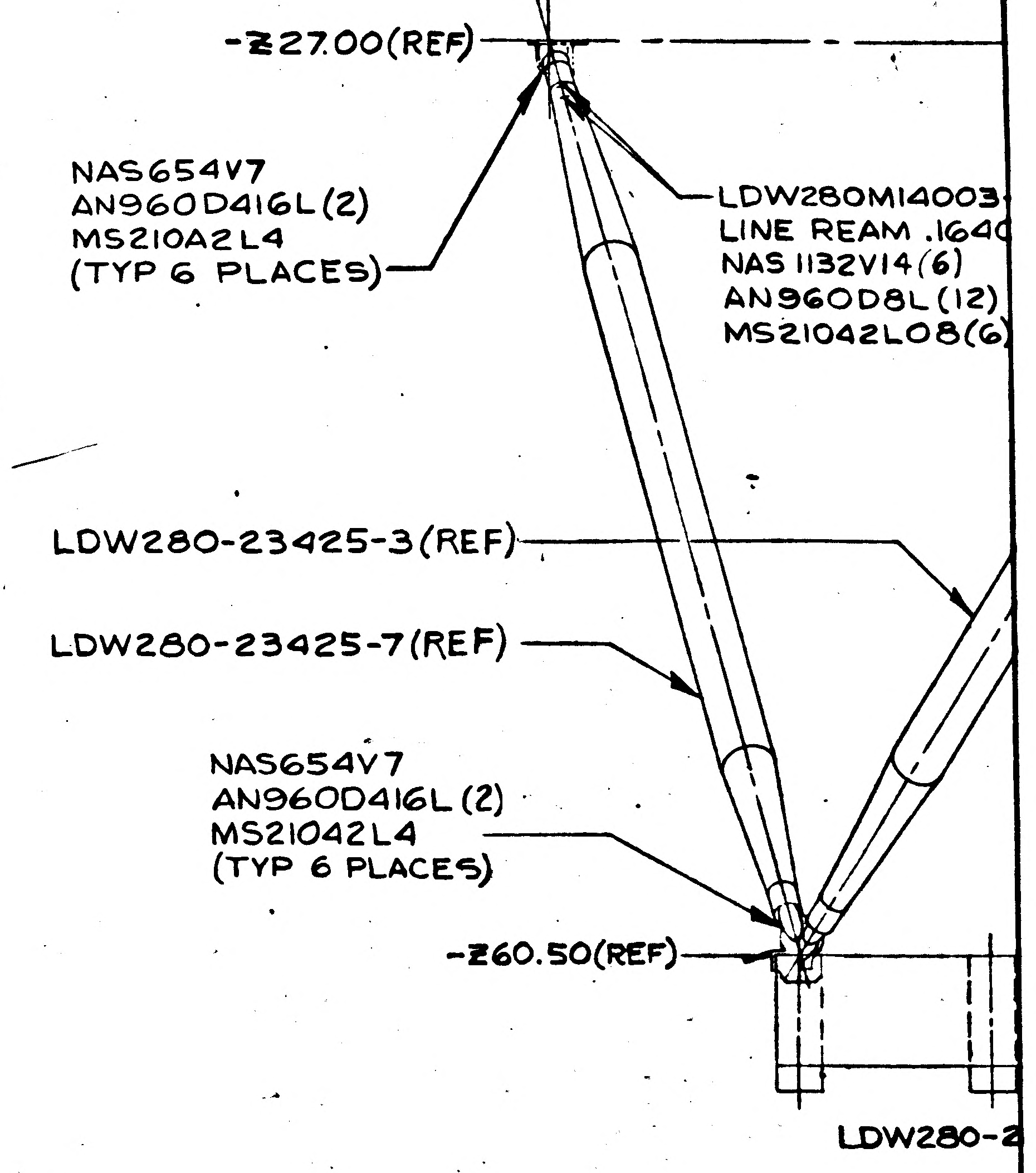

-Z27.00(REF)
NAS654V7
AN960D416L(2)
MS210A2L4
(TYP 6 PLACES)
LDW280M14003-
LINE REAM .1640
NAS 1132V14(6)
AN960D8L(12)
MS21042L08(6)
LDW280-23425-3(REF)
LDW280-23425-7(REF)
NAS654V7
AN960D416L(2)
MS21042L4
(TYP 6 PLACES)
-Z60.50(REF)
LDW280-2
X29

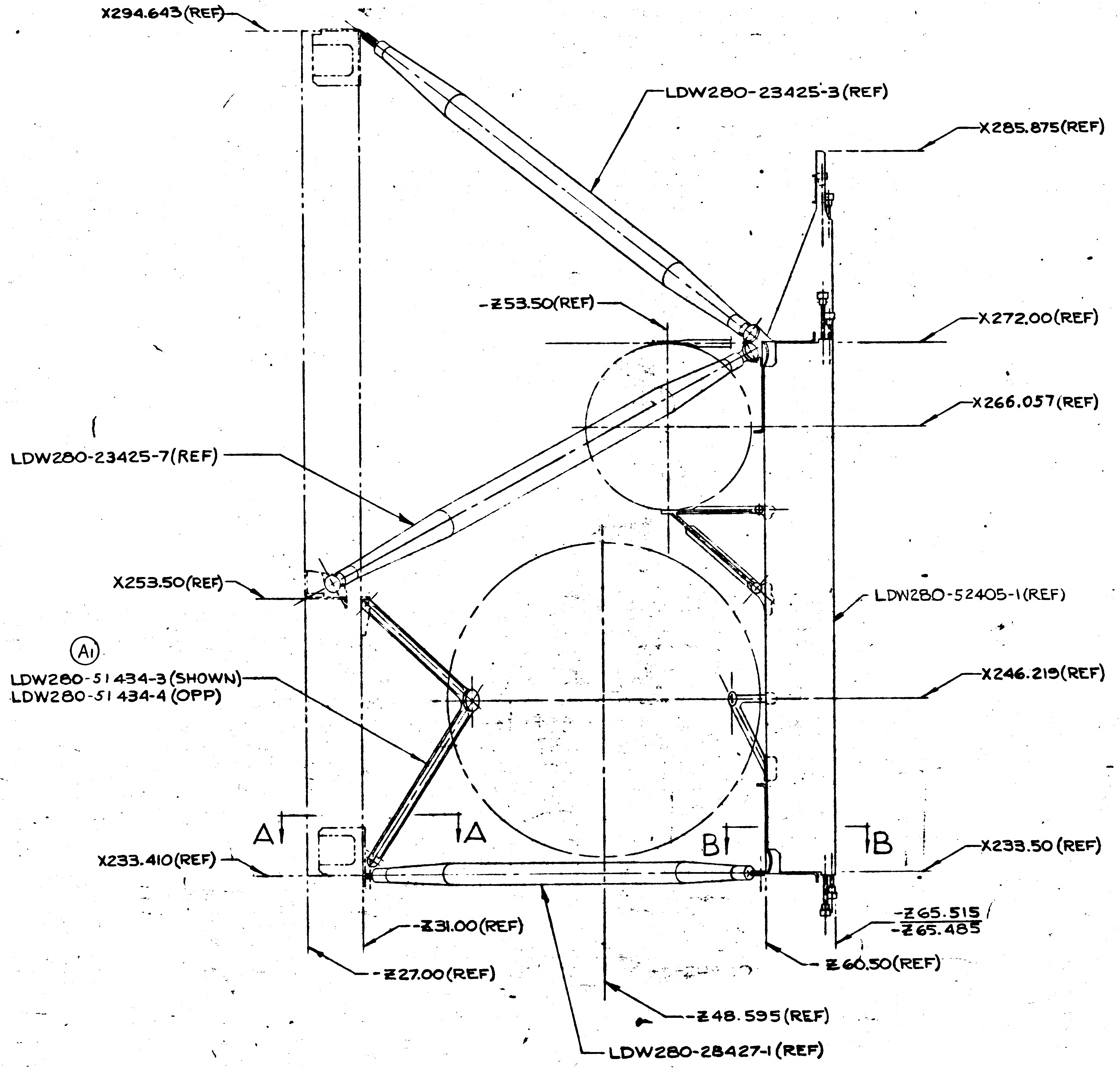

X294.643(REF)
LDW280-23425-3(REF)
X285.875(REF)
-Z53.50(REF)
X272.00(REF)
X266.057(REF)
LDW280-23425-7(REF)
X253.50(REF)
LDW280-52405-1(REF)
A1
LDW280-51434-3(SHOWN)
LDW280-51434-4(OPP)
X246.219(REF)
A
A
B
B
X233.410(REF)
X233.50(REF)
-Z31.00(REF)
-Z65.515
-Z65.485
-Z27.00(REF)
Z60.50(REF)
-Z48.595(REF)
LDW280-28427-1(REF)

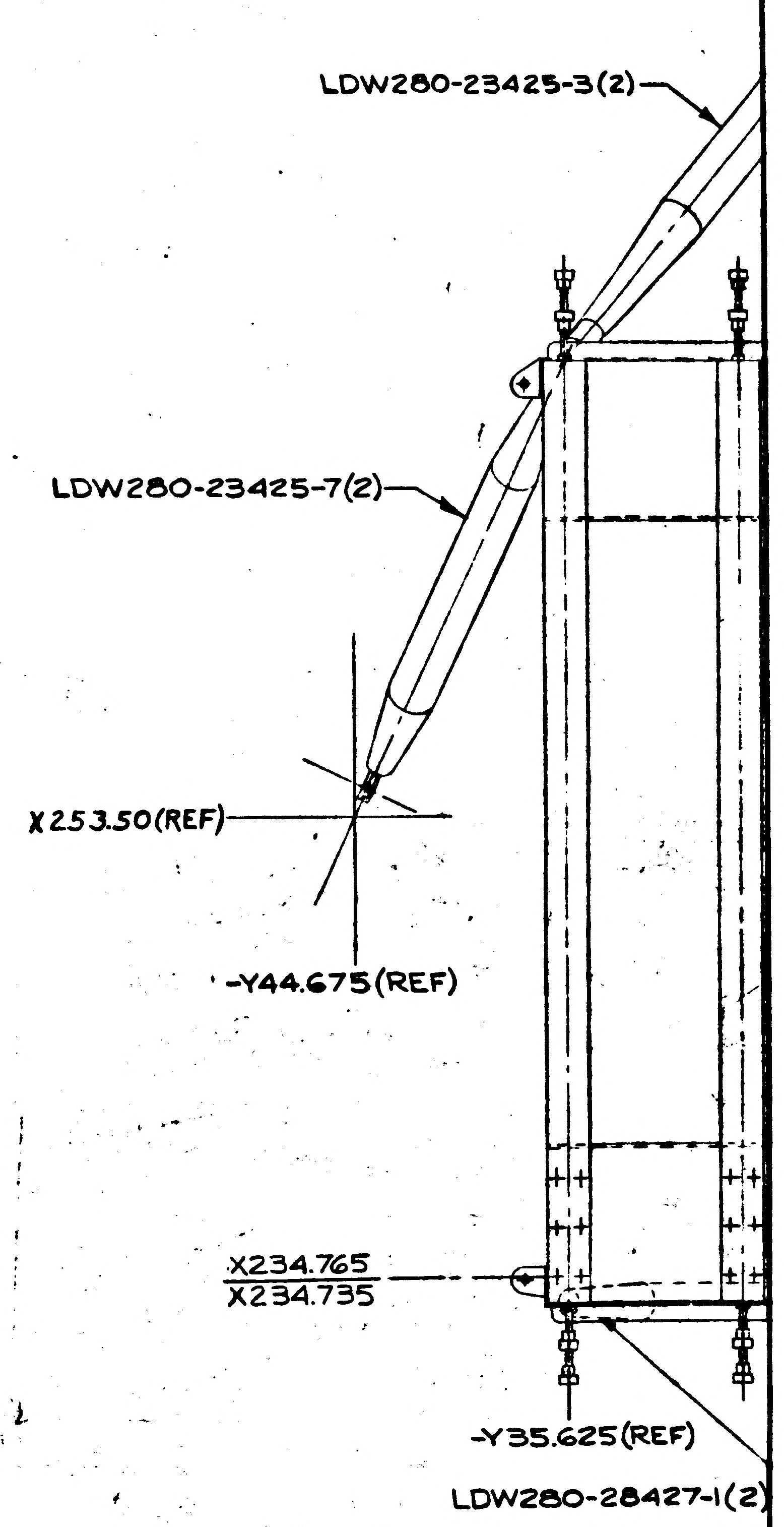

LDW280-23425-3(2)
LDW280-23425-7(2)
X253.50(REF)
-Y44.675(REF)
X234.765
X234.735
-Y35.625(REF)
LDW280-28427-1(2)

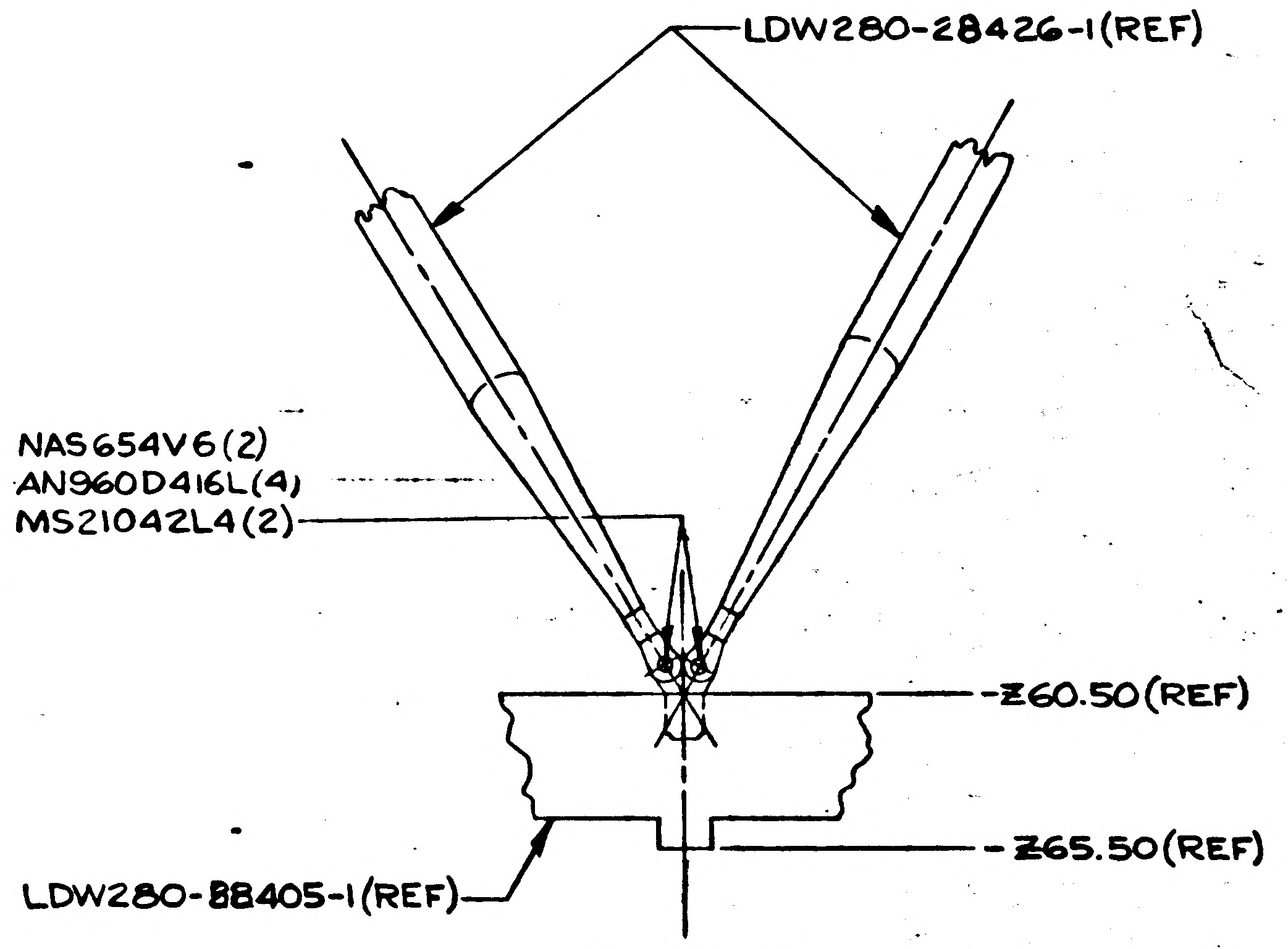

LDW280-28426-1(REF)
NAS654V6(2)
AN960D416L(4)
MS21042L4(2)
-Z60.50(REF)
-Z65.50(REF)
LDW280-88405-1(REF)
Y0.00(REF)

VIEW C-C

01/03

NAS 9-1100

9 8 7 6 5

NOTES: 1. SHIM AS REQ'D USING AL LAMINATED SHIM .003 LAMINATIONS 5052-H39. USE TWO EQUAL THICKNESSES EACH SIDE OF TAB. MAX THICKNESS OF EACH SHIM SHALL BE .039.

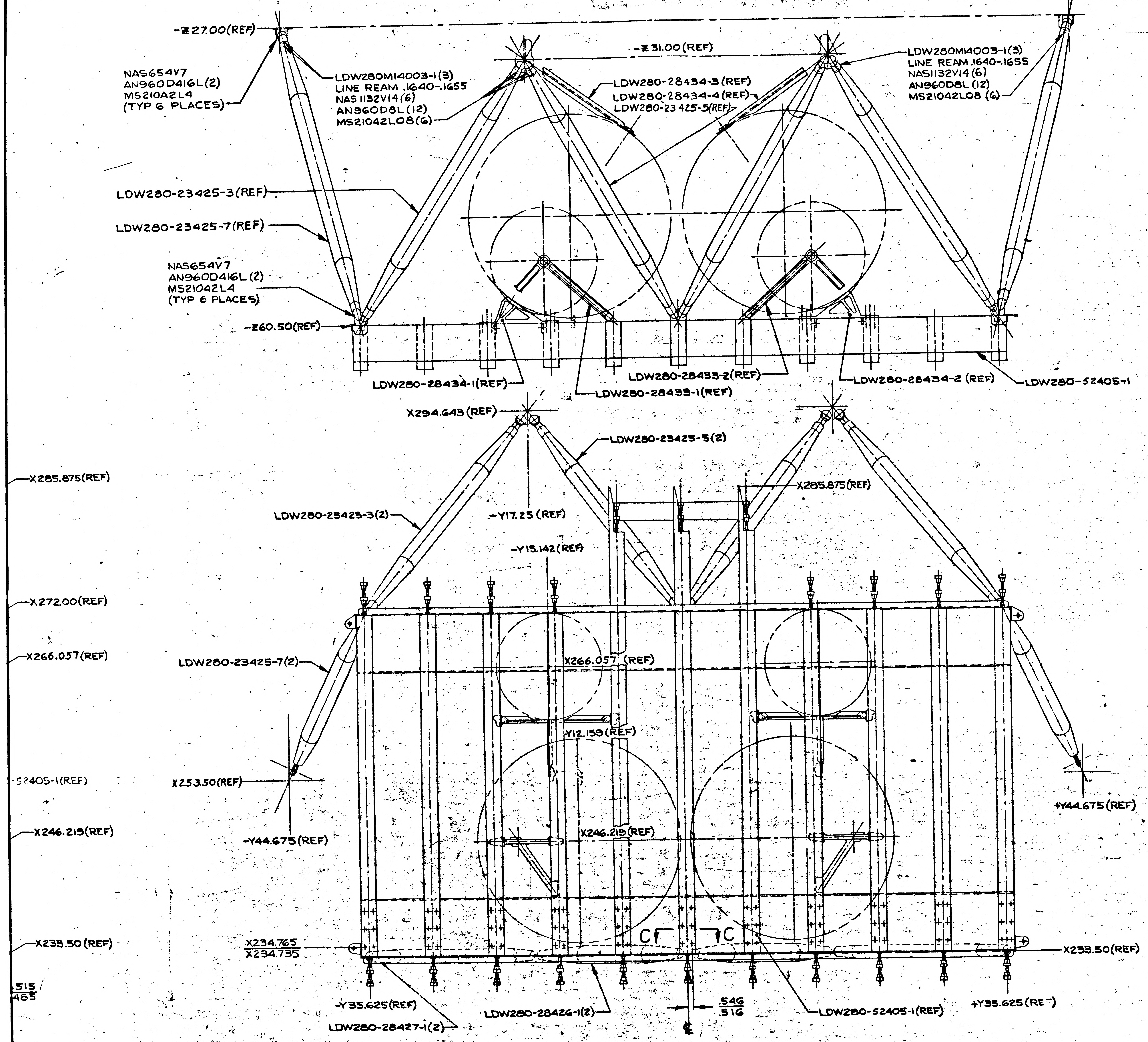
-Z27.00(REF)
NAS654V7
AN960D416L(2)
MS21042L4
(TYP 6 PLACES)
LDW280M14003-1(3)
LINE REAM .1640-.1655
NAS1132V14(6)
AN960D8L(12)
MS21042L08(6)
-Z31.00(REF)
LDW280-28434-3(REF)
LDW280-28434-4(REF)
LDW280-23425-5(REF)
LDW280M14003-1(3)
LINE REAM .1640-.1655
NAS1132V14(6)
AN960D8L(12)
MS21042L08(6)
LDW280-23425-3(REF)
LDW280-23425-7(REF)
NAS654V7
AN960D416L(2)
MS21042L4
(TYP 6 PLACES)
-Z60.50(REF)
LDW280-28434-1(REF)
LDW280-28433-2(REF)
LDW280-28433-1(REF)
LDW280-28434-2(REF)
LDW280-52405-1
X294.643(REF)
LDW280-23425-5(2)
X285.875(REF)
X285.875(REF)
LDW280-23425-3(2)
-Y17.25(REF)
-Y15.142(REF)
X272.00(REF)
X266.057(REF)
LDW280-23425-7(2)
X266.057(REF)
Y12.159(REF)
52405-1(REF)
X253.50(REF)
+Y44.675(REF)
X246.219(REF)
-Y44.675(REF)
X246.219(REF)
X233.50(REF)
X234.765
X234.735
CL
CL
X233.50(REF)
.515
.485
-Y35.625(REF)
LDW280-28426-1(2)
.546
.516
LDW280-52405-1(REF)
+Y35.625(REF)
LDW280-28427-1(2)
CL

LDW280-52401-1 INSTL.

VIEW LOOKING FWD

80
30

02/03 NAS 9-1100

	GRUMMAN AIRCRAFT
	SIZE J
	CODE IDENT NO. 26512
LEM	
MODEL OF END ITEM	SCALE 1/4

5 4 3 2 1

THIS IS AN ORIG

NOTES:1. SHIM AS REQ'D USING AL LAMINATED SHIM .003 LAMINATIONS 5052-H39. USE TWO EQUAL THICKNESSES EACH SIDE OF TAB. MAX THICKNESS OF EACH SHIM SHALL BE .039.

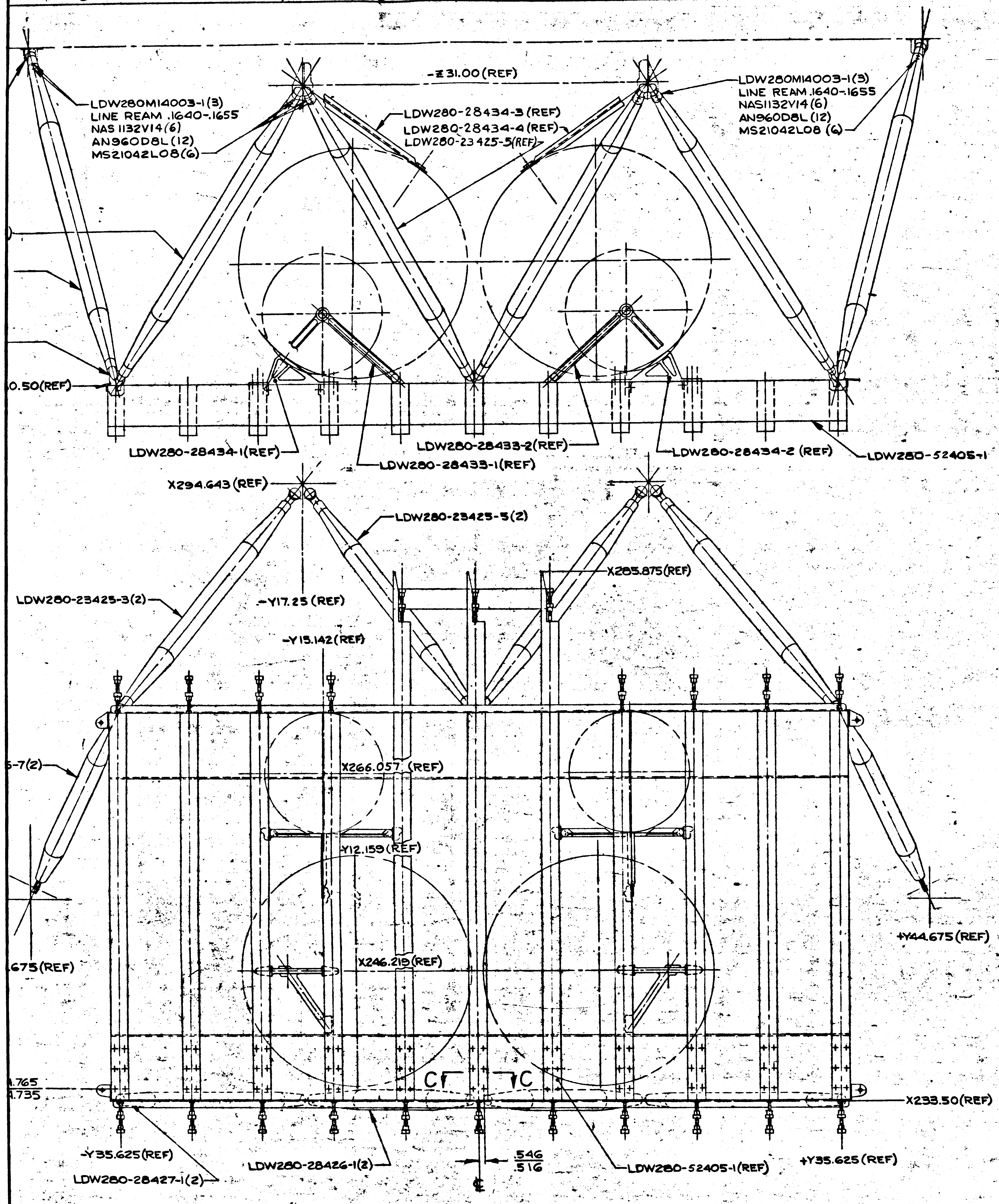

-Z31.00(REF)
LDW280M14003-1(3)
LINE REAM .1640-.1655
NAS 1132V14(6)
AN960D8L(12)
MS21042L08(6)
LDW280-28434-3(REF)
LDW280-28434-4(REF)
LDW280-23425-5(REF)
LDW280M14003-1(3)
LINE REAM .1640-.1655
NAS1132V14(6)
AN960D8L(12)
MS21042L08(6)
0.50(REF)
LDW280-28434-1(REF)
LDW280-28433-2(REF)
LDW280-28433-1(REF)
LDW280-28434-2(REF)
LDW280-52405-1
X294.643(REF)
LDW280-23425-5(2)
X285.875(REF)
LDW280-23425-3(2)
-Y17.25(REF)
-Y15.142(REF)
5-7(2)
X266.057(REF)
Y12.159(REF)
X246.219(REF)
+Y44.675(REF)
.675(REF)
.765
.735
C
C
X233.50(REF)
-Y35.625(REF)
LDW280-28427-1(2)
LDW280-28426-1(2)
.546
.516
LDW280-52405-1(REF)
+Y35.625(REF)

LDW280-52401-1 INSTL.

VIEW LOOKING FWD

MANUFACTURING OPERATIONS
UNLESS OTHERWISE SPECIFIED
NOTES CHECKED √ APPLY TO THIS DWG.

PART NUMBER AND ALL OTHER MARKINGS IN REGION MARKED ⊠ USE BOTH SIDES IF NECESSARY.

FILLET AND INSIDE CORNER RADII TOLERANCES
.016R TO .062R ± .010
.063R TO .250R ± .015
OVER .250R ± .030

DEPTH SHOWN FOR TAPPED HOLES IS FULL THDS. 2-3 IMP THDS. BEYOND PERMISSIBLE.

EXTERNAL THREAD LENGTH SHOWN INCLUDES 2 IMPERFECT THREADS MAX.

DO NOT CADMIUM PLATE & PAINT HOLES OR SURFACES MARKED WITH DOUBLE ASTERISK.

MISMATCH STEP OF ± .005 PERMISSIBLE DUE TO CHANGE OF CUTTERS AT INSIDE INTERSECTING SURFACES.

DIAMETERS MARKED MUST BE CONCENTRIC WITHIN FULL INDICATOR READING

HOLES MUST BE KEPT FREE OF CHROME PLATING SOLUTION.

ALL DIMENSIONS SHOWN TO BE MET AFTER CADMIUM PLATING. THICKNESS OF PLATE .0003 MIN. TO .0005 MAX. MIN. THICKNESS TO BE .0002 ON THREADED AREAS. NO ALLOWANCE FOR PLATING IN HOLES

125 SURFACE ROUGHNESS INCLUDING REAMED HOLES PER MIL-STD-10

200 FOR ALL DRILLED HOLES

REMOVE ALL BURRS. BREAK ALL EDGES .015-.031

INSPECTION INFORMATION MINIMUM PERMISSIBLE AVERAGE EDGE DISTANCE MARKED IS

SYMBOL √ DENOTES SURFACE TO BE MACHINED

UNLESS OTHERWISE SPECIFIED TOLERANCE ON FLANGES IS ± 1/32

LENGTHS OF AN, NAS & MS AL ALY RIVETS SHORTER THAN 1 INCH ARE NOT SPECIFIED.

TOLERANCE ON LOFTED DELINEATIONS IS

DWG SIZE 34 X 90

PRINTING INFO ONLY
FULL SIZE SHEET AREA (36 X 92) — 23 SQ. FT.
1/2 SIZE SHEET AREA (1/4 OF FULL) — 5.75 SQ. FT.

PRINT THIS LINE

80
30

LDW280-52401

LDW280-52401

03/03

NAS 9-1100

	GRUMMAN AIRCRAFT ENGRG CORP., BETHPAGE, L. I., NEW YORK		
	SIZE J	CODE IDENT NO. 26512	LDW280-52401
LEM MODEL OR END ITEM	SCALE 1/4		SHEET 3

THIS IS AN ORIGINAL DRAWING

ENG 32.2 REV 3-65

GRUMMAN AIRCRAFT ENGINEERING CORP.
CODE IDENT NO. 26512
ENGINEERING ORDER

DWG. NO. LDW 280-52401		EO NO. A3
CONTROL INFO NO. LDW 280A-3004		

EO NUMBER WAS B2

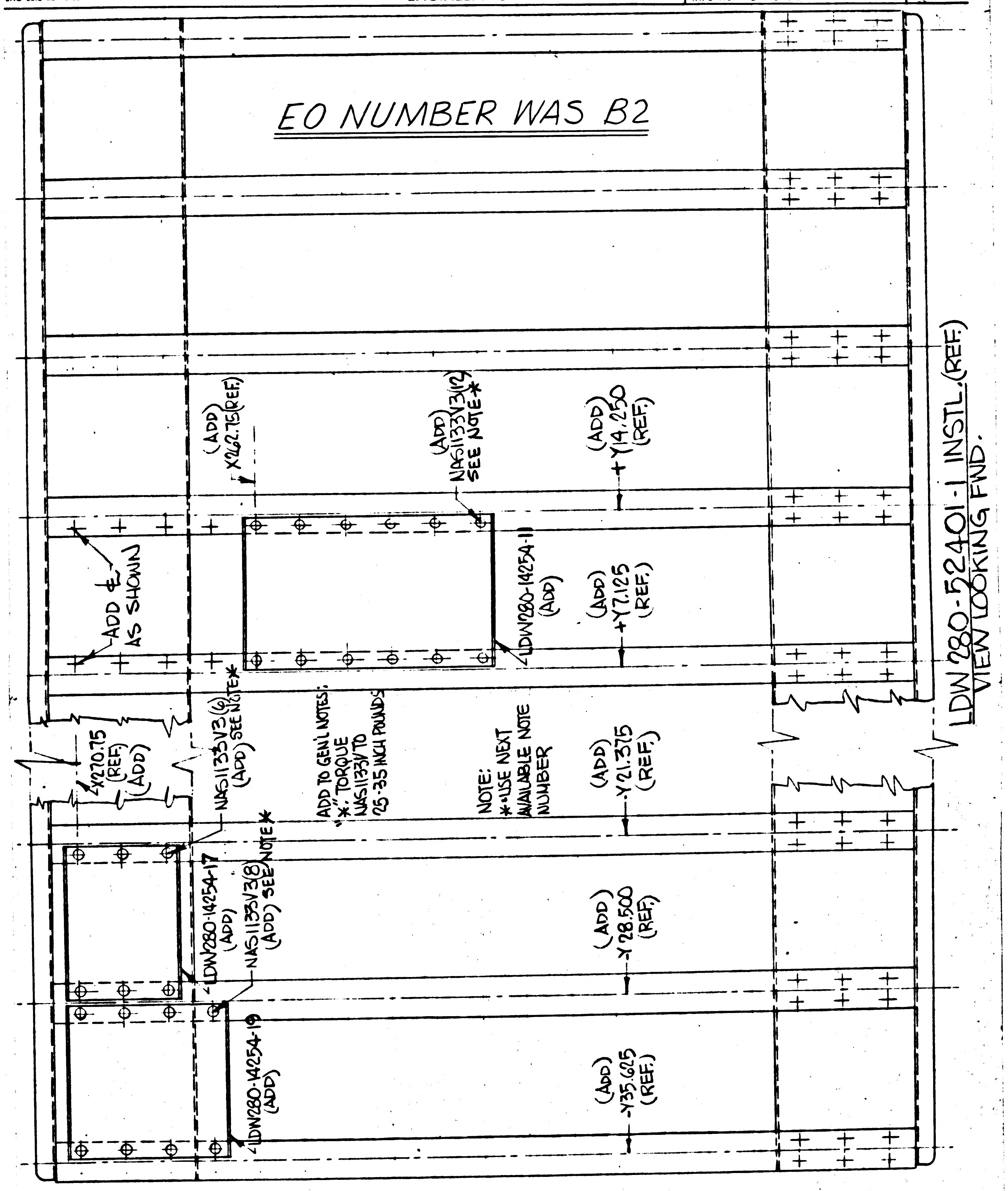
(ADD) X262.75(REF.)
(ADD) NAS1133V3(12) SEE NOTE*
(ADD) +Y14.250 (REF.)
ADD ℄ AS SHOWN
LDW280-14254-11 (ADD)
(ADD) +Y7.125 (REF.)
X270.75 (REF.) (ADD)
NAS1133V3(6) (ADD) SEE NOTE*
ADD TO GEN'L NOTES: "*" TORQUE NAS1133V TO 25-35 INCH POUNDS
NOTE: *-USE NEXT AVAILABLE NOTE NUMBER
(ADD) -Y21.375 (REF.)
LDW280-14254-17 (ADD)
NAS1133V3(8) (ADD) SEE NOTE*
(ADD) -Y28.500 (REF.)
LDW280-14254-19 (ADD)
(ADD) -Y35.625 (REF.)
LDW 280-52401-1 INSTL.(REF.)
VIEW LOOKING FWD.
3

DETAIL SPEC REQ		CL II ENGRG CHG		CL I ENGRG CHG		LCR 617

REASON FOR EO	DESCRIPTION OF EO	GAEC C EO RELEASE
STRUCTURAL BEEF-UP REQUIRED TO ELIMINATE NEGATIVE MARGINS	ON-1, ADDED LDW 280-14254-11, LDW 280-14254-17, LDW280-14254-19 & NAS1133V3 (26). ADDED LOCATING (REF.) DIMS. ADDED NOTE *	FK 11/17/6

MODEL	PROCURING ACTIVITY NO.	GAEC UNIT NO.	SUB CONTR UNIT NO.
LM		LM-2 (32)	

DRAWING CHANGE REQD		DISPOSITION OF PARTS		APPROVED BY	FDR				JV		RMC	
✓		✓		DATE	11/3/66				11/14		11-18-66	11/16/66
REVISE DWG	RECORD EO	REWORK	SCRAP	5	V.D.I	SUPPORT	RELIAB. GROUP	GROUP LEADER	STRESS GROUP	LIAISON ENGRG	PROJ ENGRG	

PRIORITY	DRAWING TITLE	DRAWING NO.	EO NO.
C	STRUCTURAL INSTALLATION ASCENT STAGE-AFT EQUIPMENT BAY	LDW 280-52401	A3

ISSUED BY W. PAIUK 11-3-66 SECTION VEH. DES. INT. GROUP NO. 335 PL 35

01 NAS 9-1100

B

ENG 32.1 REV 3-65

GRUMMAN AIRCRAFT ENGINEERING CORP.
CODE IDENT NO. 26512
ENGINEERING ORDER

DWG NO. LDW280-52401 | EO NO. A4
CONTROL INFO NO. LDW280B-0872

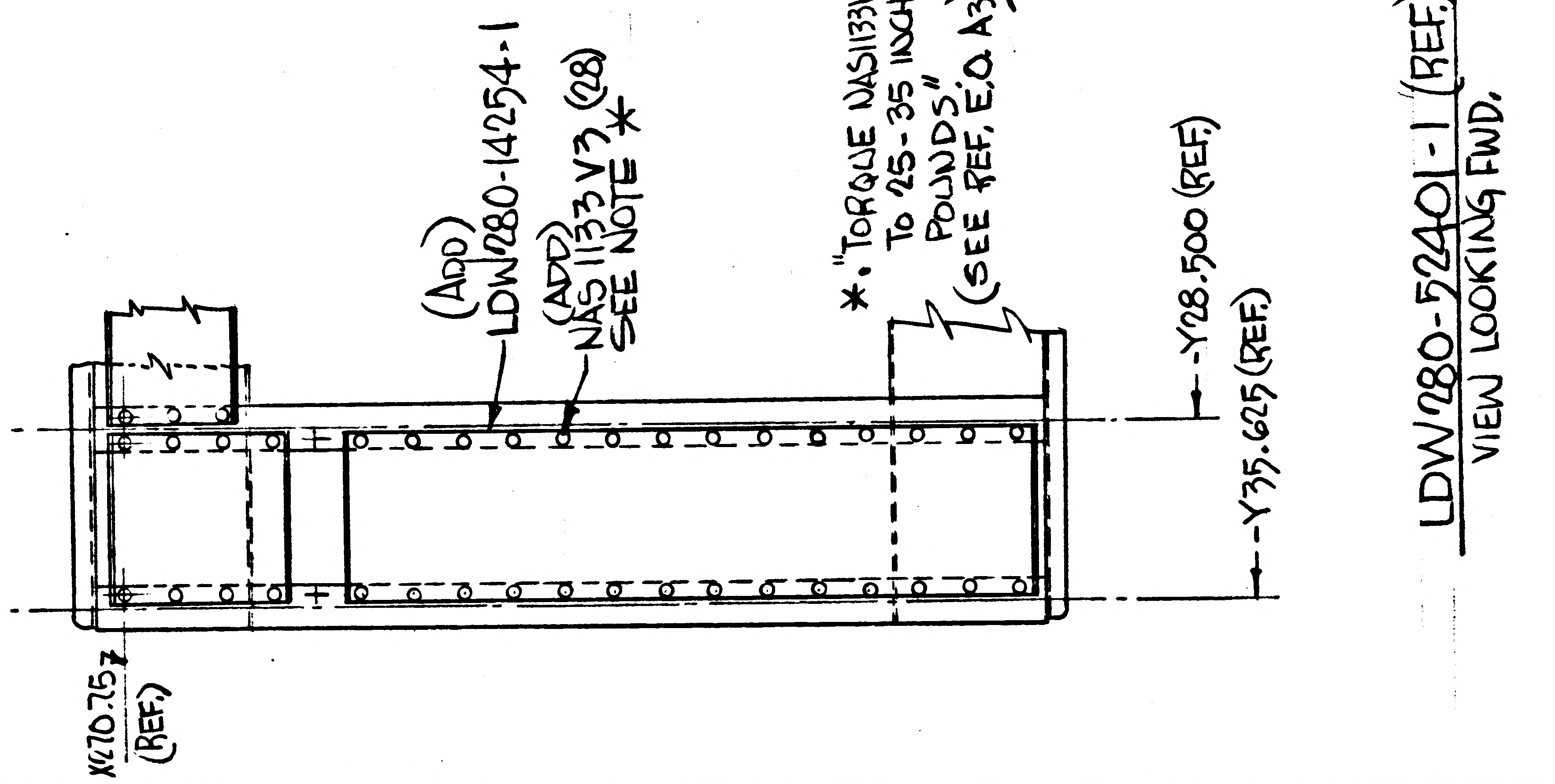

(ADD) LDW280-14254-1
(ADD) NAS1133V3 (28) SEE NOTE *
*. "TORQUE NAS1133V TO 25-35 INCH POUNDS" (SEE REF. E.O. A3)
-Y28.500 (REF.)
-Y35.625 (REF.)
LDW280-52401-1 (REF.) VIEW LOOKING FWD.
X270.757 (REF.)

DETAIL SPEC REQ		CL II ENGRG CHG		CL I ENGRG CHG	✓	LCD 2448 A CCA 802

REASON FOR EO: DELETION OF RADAR ELECTRONIC ASSY'S FROM LM-2

DESCRIPTION OF EO: ON-1, ADDED LDW280-14254-1, NAS1133V3(28)

GAEC EO RELEASE: JK 12/26/67

MODEL	PROCURING ACTIVITY NO.	GAEC UNIT NO.	SUB CONTR UNIT NO.
LM		LM-2(32)	

DRAWING CHANGE REQD: REVISE DWG	RECORD EO	DISPOSITION OF PARTS: REWORK	SCRAP
✓		✓	

	H	VDI	SUPPORT	RELIAB. GROUP	GROUP LEADER	STRESS GROUP	LIAISON ENGRG	PROJ ENGRG	~~CONT~~
APPROVED BY		JHS			FNR	CR		JGP	J. Freed
DATE		12/19/67			12-19-67	12/20/67		12/21/67	12-26-67

PRIORITY: C

DRAWING TITLE: STRUCTURAL INSTL. ASCENT STAGE~AFT EQUIP. BAY

DRAWING NO. LDW280-52401

EO NO. A4

12-21-67
ISSUED BY W. PAIUK

SECTION VEH. DES. INT.

GROUP NO. 335 PL 25

01 NAS 9-1100

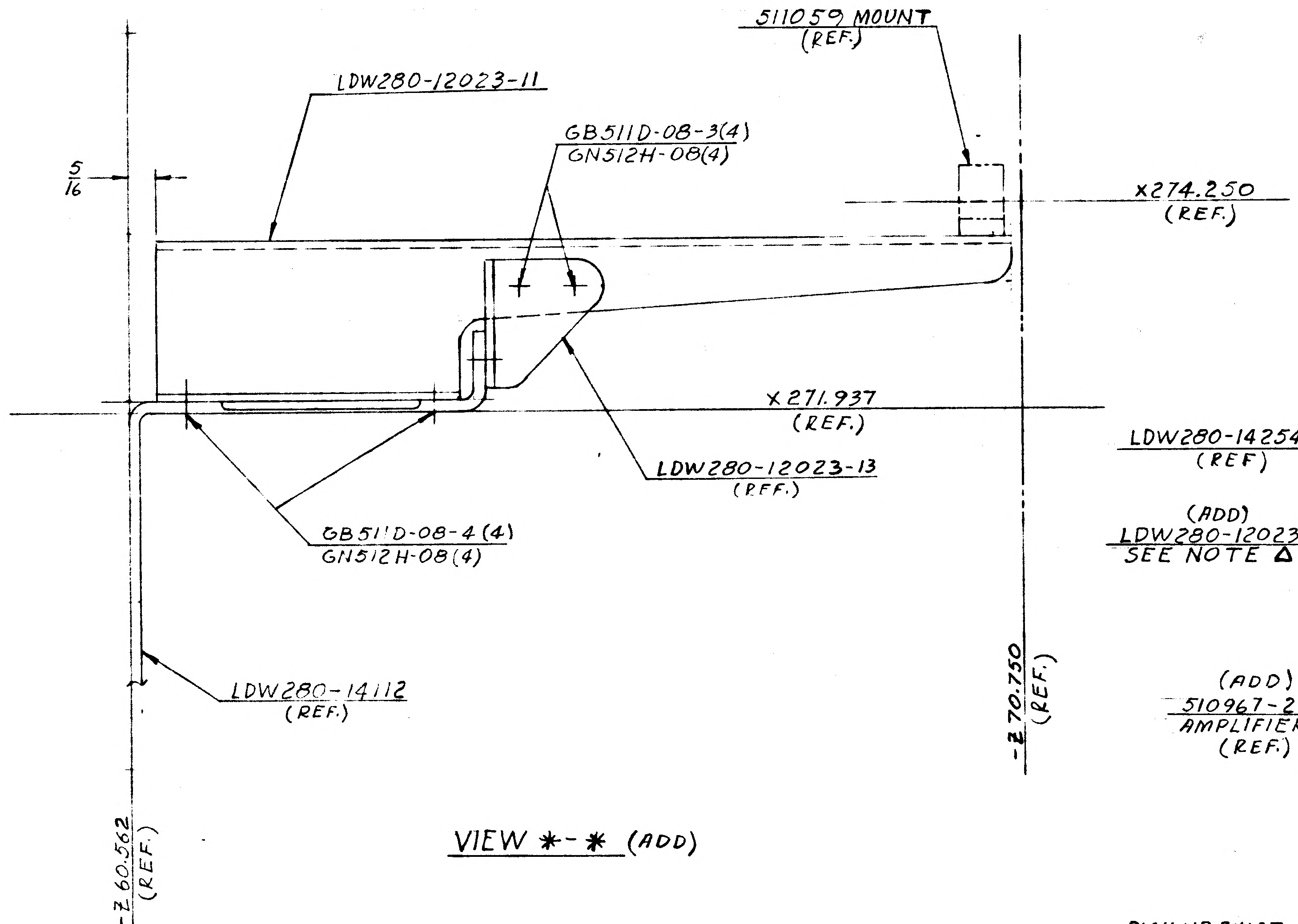
511059 MOUNT
(REF.)
LDW280-12023-11
5/16
GB511D-08-3(4)
GN512H-08(4)
X274.250
(REF.)
X271.937
(REF.)
LDW280-12023-13
(REF.)
GB511D-08-4(4)
GN512H-08(4)
LDW280-14112
(REF.)
-270.750
(REF.)
-260.562
(REF.)

VIEW *-* (ADD)

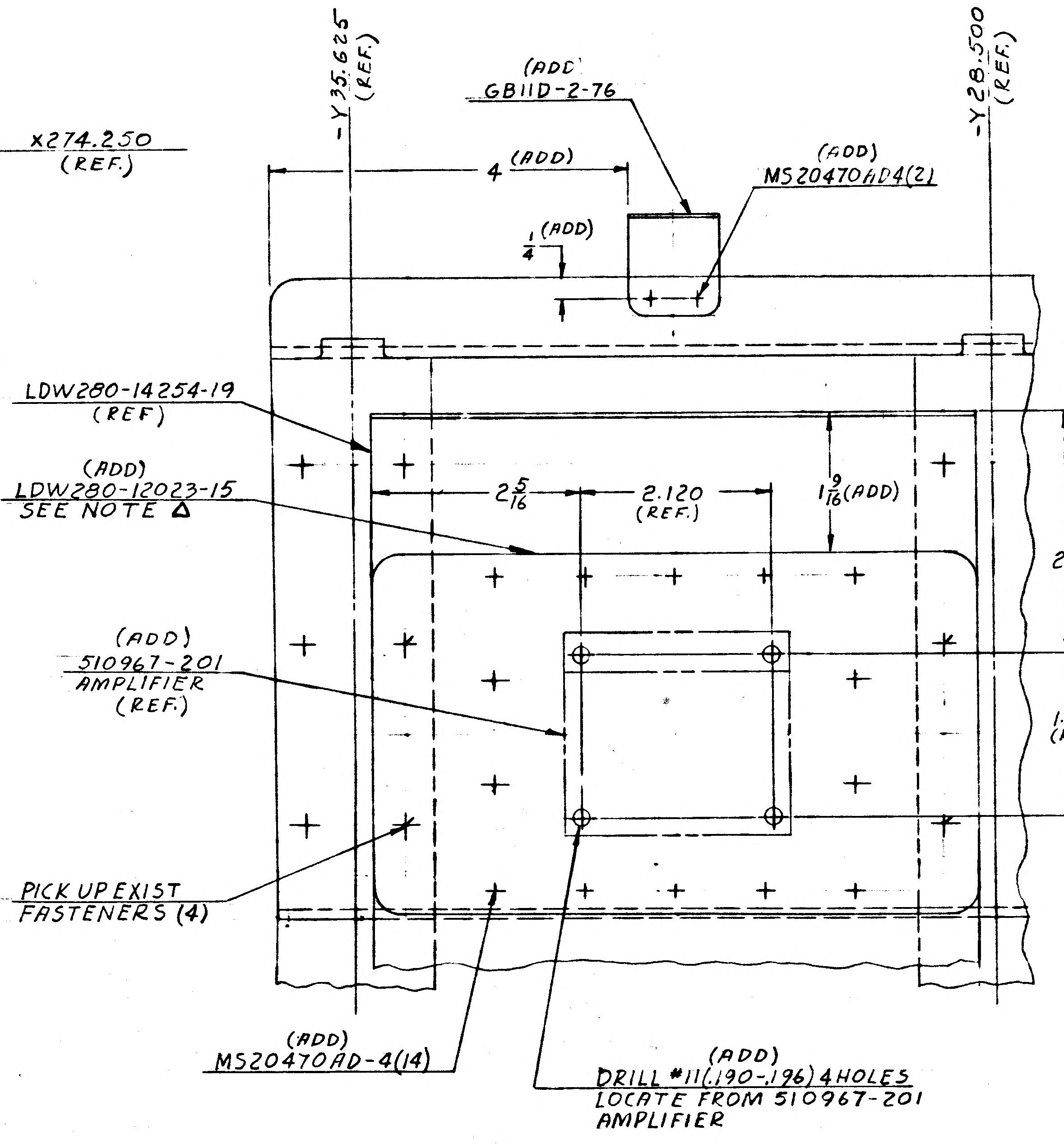
-Y35.625
(REF.)
-Y28.500
(REF.)
(ADD)
GB11D-2-76
(ADD)
MS20470AD4(2)
4 (ADD)
1/4 (ADD)
LDW280-14254-19
(REF.)
(ADD)
LDW280-12023-15
SEE NOTE △
2 5/16
2.120
(REF.)
1 9/16 (ADD)
2 11/16
(ADD)
510967-201
AMPLIFIER
(REF.)
1.810
(REF.)
PICK UP EXIST
FASTENERS (4)
(ADD)
MS20470AD-4(14)
(ADD)
DRILL #11(.190-.196) 4 HOLES
LOCATE FROM 510967-201
AMPLIFIER

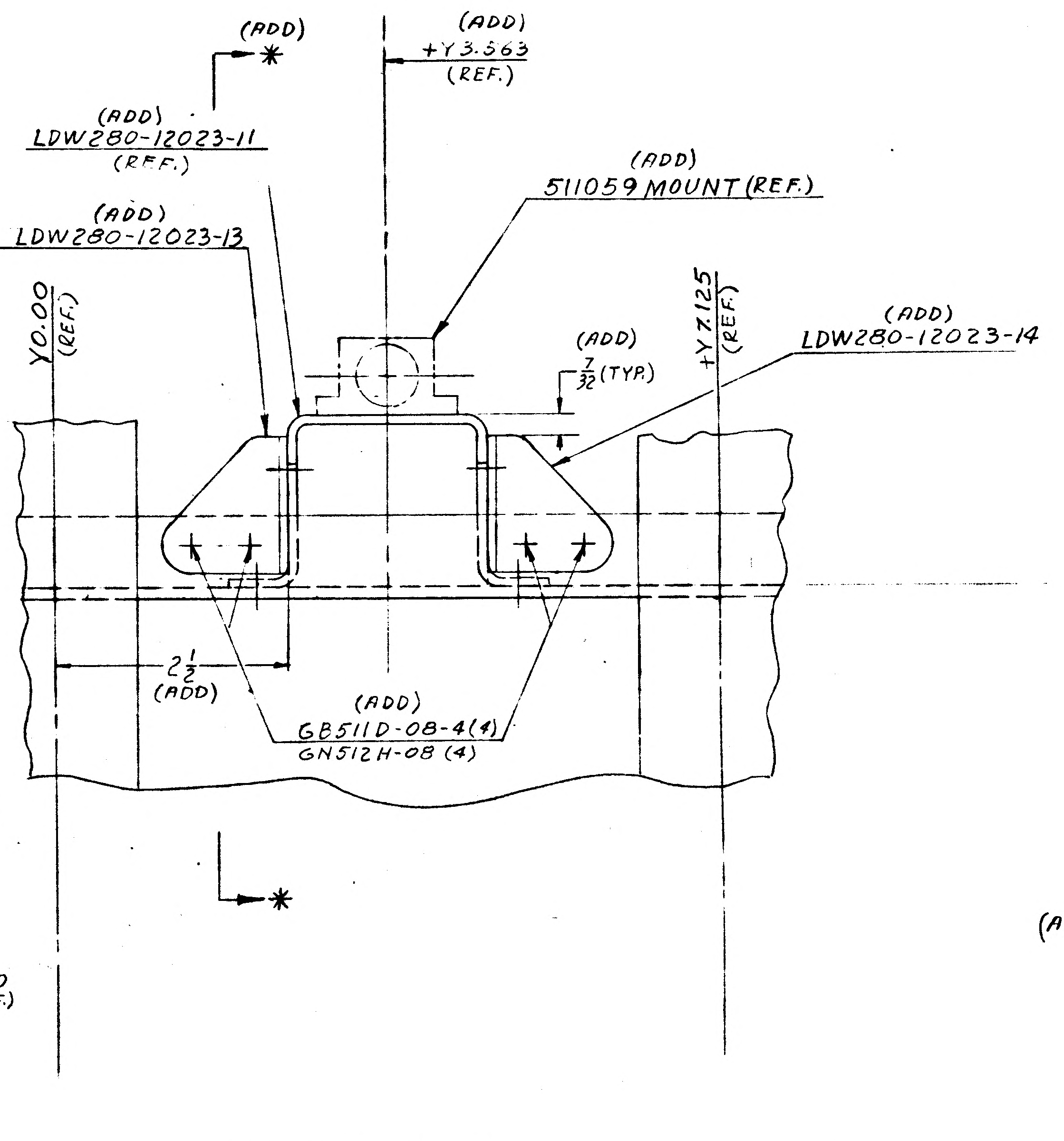
(ADD)
*
(ADD)
+Y3.563
(REF.)
(ADD)
LDW280-12023-11
(REF.)
(ADD)
LDW280-12023-13
(ADD)
511059 MOUNT (REF.)
Y0.00
(REF.)
+Y7.125
(REF.)
(ADD)
7/32 (TYP.)
(ADD)
LDW280-12023-14
2 1/2
(ADD)
(ADD)
GB511D-08-4(4)
GN512H-08(4)
*

LDW280-52401-1 INST.
VIEW LOOKING FWD.

REVISE LDW280-52401-1 INSTL AS SHOWN
ADD VIEW *-* (USE NEXT AVAILABLE LETTER)

(ADD) NOTE △ (USE NEXT AVAILABLE NOTE NO.)
BOND LDW280-12023-15 TO LDW280-14254-19
USING EPON 934 IN ACCORDANCE WITH
LSP 14-22500 ROOM TEMP. PERMISSABLE

10.1

NAS 9-1100

(5)

DETAIL SPEC REQD		CLASS II ENGRG CHG		CLASS I ENGRG CHG	✓	LCD 2653	PKG #2	CONTROL INFO NO. LDW280-B-2302

REASON FOR EO
ADDITION OF SUPPORT STRUCT. FOR MICROPHONE

DESCRIPTION OF EO
-1 INSTL. ADDED LDW280-12023-11,-13,-14 & -15, GB511D-08-3(4)
GB511D-08-4(8) & GN512H-08(12), GB11D-2-76 & MS20470AD4(16),
ADDED VIEW *-* & NOTE △

GRUMMAN EO RELEASE
JC 3/11/68

MODEL	EFFECTIVITY PROCURING ACT. NO.	EFFECTIVITY GAEC UNIT NO.	EFFECTIVITY SUB CONTR UNIT NO.
LM		LM-2 (32)	

DRAWING REVISION REQD: REVISE DWG	DRAWING REVISION REQD: RECORD EO	DISPOSITION OF PARTS: REWORK	DISPOSITION OF PARTS: SCRAP	BY / DATE / T	SUPPORT	RELIAB GROUP	GROUP LEADER	STRESS GROUP	LIAISON ENGRG	PROJ ENGR	
✓		✓		JMS 3/9/68 V.D.I			3-7-68	3-11		3/11/68	3-11-68

PRIORITY: C

DRAWING TITLE: STRUCTURAL INSTALLATION
A/S-AFT EQUIPMENT BAY

ENGINEERING ORDER
DRAWING NO. LDW280-52401
EO NO. A5

3/11/68 X7036
ISSUED BY A. PROKOPETZ SECTION V.D.I GROUP NO. 335 PL 25

CODE IDENT NO. 26512

GRUMMAN AIRCRAFT ENGINEERING CORP
BETHPAGE, L. I., N. Y.

ENG 32.3 REV 3-65

GRUMMAN AIRCRAFT ENGINEERING CORP.
CODE IDENT NO. 26512
ENGINEERING ORDER

DWG. NO.	LDW280-52401	EO NO.	A6
CONTROL INFO NO.	LM5-19394		

ENG 32.2 REV 3-65

THIS IS A REVISION OF EO A5

ADD REWORK INFO TO EOA5 AS SHOWN

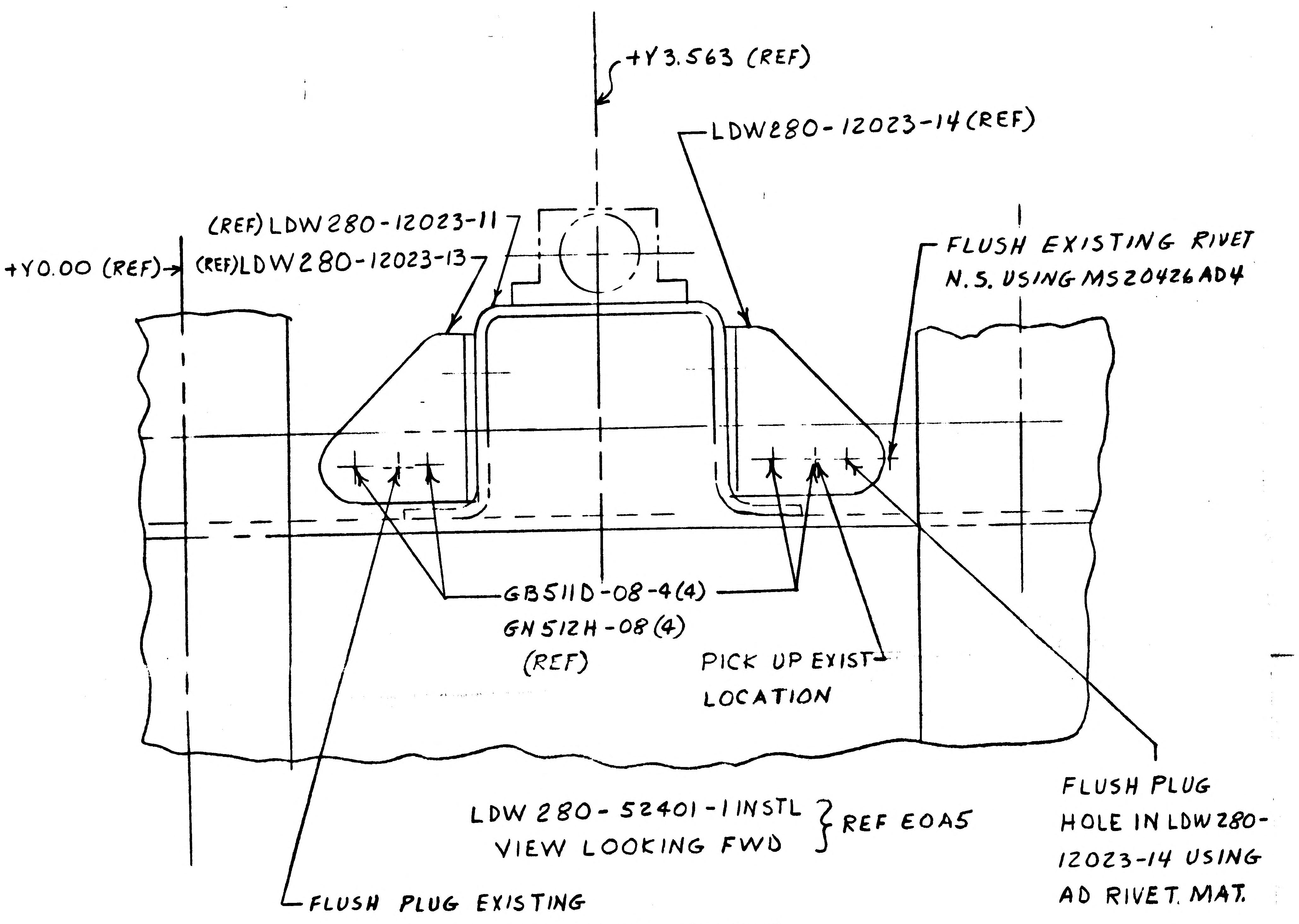
+Y3.563 (REF)
LDW280-12023-14 (REF)
(REF) LDW280-12023-11
+Y0.00 (REF)
(REF) LDW280-12023-13
FLUSH EXISTING RIVET N.S. USING MS20426AD4
GB511D-08-4 (4)
GN512H-08 (4)
(REF)
PICK UP EXIST LOCATION
FLUSH PLUG HOLE IN LDW280-12023-14 USING AD RIVET. MAT.
FLUSH PLUG EXISTING HOLE ON VEHICLE WITH NAS1097AD5

LDW 280-52401-1 INSTL VIEW LOOKING FWD } REF EOA5

ON EO A5 CHANGE 1/4 TO 5/16 AS SHOWN.

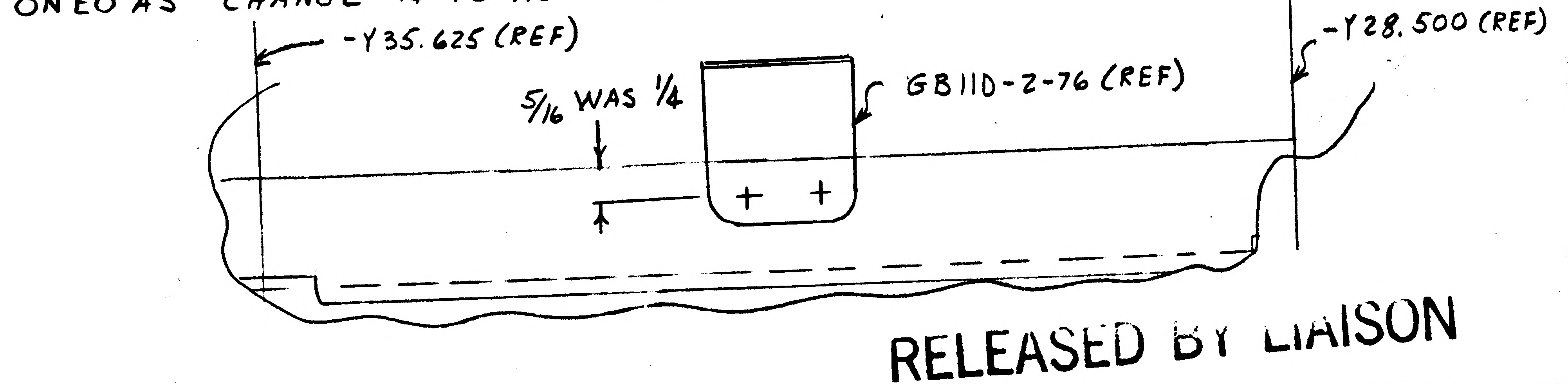
-Y35.625 (REF)
5/16 WAS 1/4
GB11D-2-76 (REF)
-Y28.500 (REF)

RELEASED BY LIAISON

DETAIL SPEC REQ		CL II ENGRG CHG		CL I ENGRG CHG	✓	LCD 2653	PKG #2 (5)
REASON FOR EO: ADDITION OF SUPPORT STRUCTURE FOR MICROPHONE. VEH STRUCTURE INTERFERES				DESCRIPTION OF EO: REF EO A5 ON-1 ADDED REWORK INFO TO EO A5 5/16 WAS 1/4			GAEC EO RELEASE ✓

MODEL	PROCURING ACTIVITY NO.	GAEC UNIT NO.	SUB CONTR UNIT NO.
LM		LM-2(32)	

DRAWING CHANGE REQD: REVISE DWG	RECORD EO	DISPOSITION OF PARTS: REWORK	SCRAP	APPROVED BY		SUPPORT	RELIAB. GROUP	GROUP LEADER	STRESS GROUP	LIAISON ENGRG	PROJ ENGRG	GOVT
✓		✓		DATE 3-18-68	VDI 3/30/68			3-18-68	3-18-68	3/30/68	3/30/68	

PRIORITY	DRAWING TITLE	DRAWING NO.	EO NO.
C	STRUCTURAL INSTL A/S-AFT EQUIP BAY	LDW 280-52401	A6

ISSUED BY LIAISON J. GRASSIANO X86755 SECTION VDI GROUP NO. 280 PL 25

GRUMMAN AIRCRAFT ENGINEERING CORP.
CODE IDENT NO. 26[illegible]
ENGINEERING ORDER

DWG NO	LDW280-52401
EO NO.	B2
CONTROL INFO NO.	LDW280A-3004

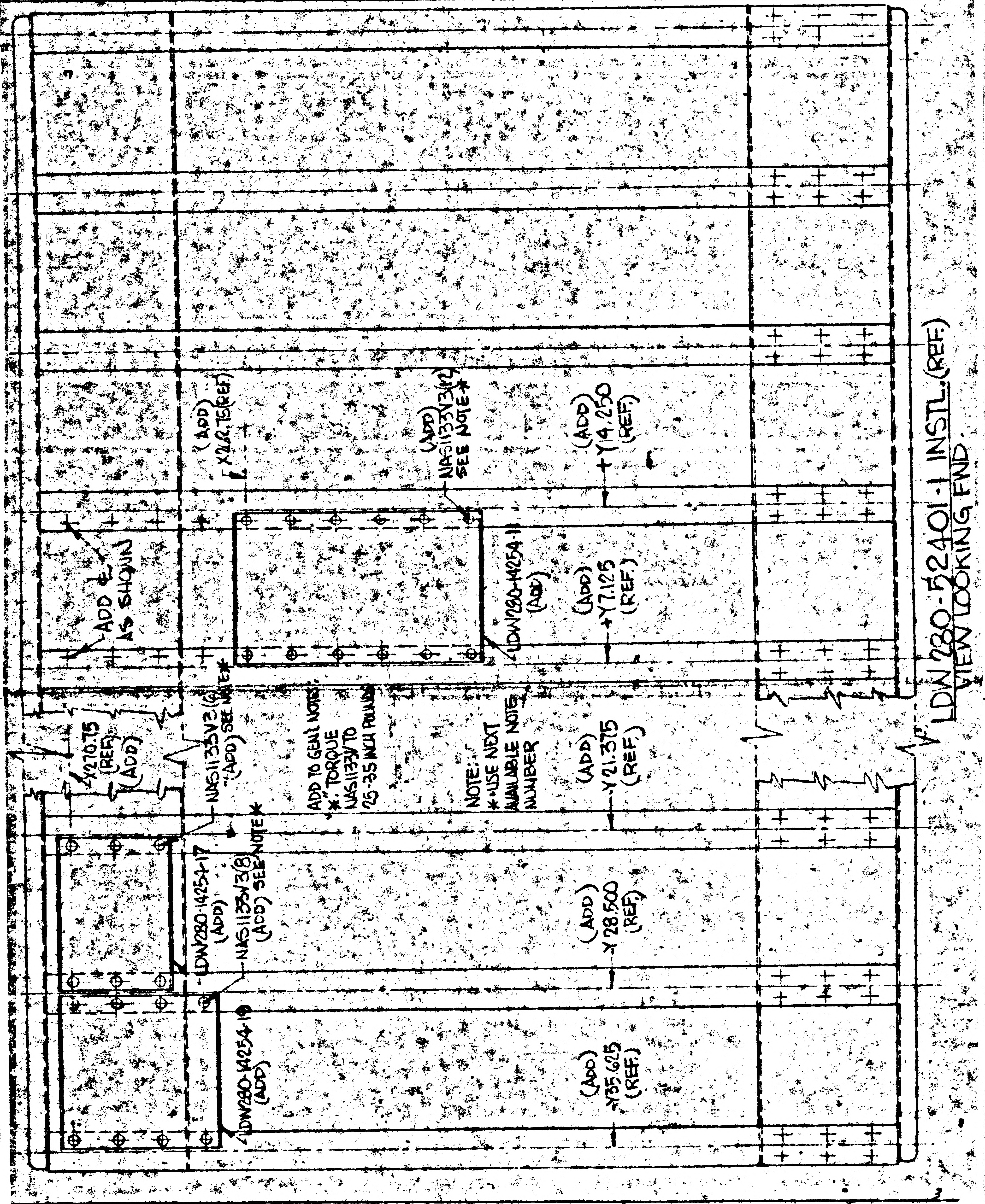

LDW280-52401-1 INSTL. (REF.)
VIEW LOOKING FWD.
(ADD) X262.75 (REF)
(ADD) NAS1133V3(12) SEE NOTE *
(ADD) Y14.250 (REF.)
ADD ℄ AS SHOWN
LDW280-14254-11 (ADD)
(ADD) Y7.125 (REF.)
X270.75 (REF.) (ADD)
NAS1133V3(6) (ADD) SEE NOTE *
ADD TO GEN'L NOTES: *: TORQUE NAS1133V TO 25-35 INCH POUNDS
NOTE: * USE NEXT AVAILABLE NOTE NUMBER
(ADD) Y21.375 (REF.)
LDW280-14254-17 (ADD)
NAS1133V3(8) (ADD) SEE NOTE *
(ADD) Y28.500 (REF.)
LDW280-14254-19 (ADD)
(ADD) Y35.625 (REF.)
3

DETAIL SPEC REQ		CL II ENGRG CHG		CL I ENGRG CHG	LCR 617

REASON FOR CHANGE	DESCRIPTION OF EO	EO RELEASE
STRUCTURAL BEEF-UP REQUIRED TO ELIMINATE NEGATIVE MARGINS	ADDED LDW280-14254-11, LDW280-14254-17, LDW280-14254-19 & NAS1133V3 (26). ADDED LOCATING (REF.) DIMS. ADDED NOTE *	FK 11/17/66

MODEL	EFFECTIVITY: PROCURING ACTIVITY NO.	GAEC UNIT NO.	SUB CONTR UNIT NO.	DRAWING CHANGE REQ'D: REVISE DWG	RECORD EO	DISPOSITION OF PARTS: REWORK	SCRAP
LM		LM-2 (32)		✓		✓	

APPROVED BY	ZDR						RMC	
DATE	11/9/66					11/14	11-18-66	11/16/66
5	VD.1	SUPPORT	RELIAB. GROUP	GROUP LEADER	STRESS GROUP	LIAISON ENGRG	PROJ ENGRG	

PRIORITY	DRAWING TITLE	DRAWING NO.	EO NO.
C	STRUCTURAL INSTALLATION ASCENT STAGE-AFT EQUIPMENT BAY	LDW280-52401	B2

ISSUED BY W. Pallk 11-3-66 SECTION VEH. DES. INT. GROUP NO. 335 PL. 35

REVISIONS FOR CONTINUATION OF REVISIONS SEE SHEET 1.11

CHANGE LTR	ITEM NO.	SHEET NO.	ZONE	GRUMMAN INFO ONLY	DET SPEC	CLASS I	CLASS II	ENGRG ORDER	DESCRIPTION	EFFECTIVITY	DISPOSITION OF EXISTING PARTS		CHANGED BY AND DATE	ENGRG APPD	GOVT APPD
											REWORK	SCRAP			
								-	RETRACED- NO CHANGE- LAST REV. "A" L.BITTNER 1-27-67						
B	1	2.00,2.02 3.00	7B 8B 11B				✓	E.O. B1	ON-1 ASSY ADDED LDW280-14131-11,-13 & -15 ANGLES, LOCATING DIMS & ATTACHMENT RIVETS. ADDED DRILL #11 (.190-.196) (12) & LOCATING DIMS & PLATE NUTS. ADDED VIEW J-J, SECTIONS G-G, H-H & NOTE 12	LM-2	✓		L. BITTNER 1-31-67		
	2	2.00,2.02 2.03,3.00	9B 9C 8B 7C 11A					E.O. B2	ON-1 ASSY ADDED LDW280-28421-1(1), LDW280-28423-1 & -2 (1 EA), LDW280-14132-1(5), -3(2), -5(1), -7(1), LDW280-28420-1(1), LDW280-28422-1(1), LDW280-14129-11(2), GR500A-4B(28), -4C(4), -4D(2), -4E(6) & MS20470AD3(2), LDW280-28424-1 & -2 (1 EA). IN FLD ADDED SECTION F-F. REMOVED GR500A-4G(3) & GR500A-5D(2) AT ±Y14.250						
	3							E.O. B3	SUPERSEDED BY E.O. B6	NOT REQD	NOT	REQD			
	4	2.02,2.03 3.00	9C 8D 7C					E.O. B4	ON-1 ASSY ADDED LDW280P16215-11(2), MS20470B4(4), NAS680A08 (4), MS20426AD3(8) & LOCATING DIMS	LM-2	✓				
	5	2.01,3.00	9B					E.O. B5	ADDED LDW280-28419-1 FITTING INSTL TO -1 ASSY						
	6	2.02,2.03 3.00	6A 7A 8A 9A					E.O. B6	SUPERSEDES E.O. B3 ON-1 ASSY ADDED NAS680A08(10), NAS684 A08(4), GR501A-4B(8), MS20426AD3(28), REMOVED GR500A-4D(15), GR500A-4H(1). ADDED DRILL #19 (.165-.171) 13 HOLES						
C	1	2.00,2.02 2.03,3.00	9B 8C 7C 12A 12B					E.O. C1	RELOCATED LDW280-14132-3(2) ASSY, ADDED LDW280-14137-1(3) & -3(1) ASSYS, NAS680A08(4), NAS1097-AD3(8), GR500A-4B(8), -4C(9) & -4D(12) ADDED LDW280-14137-15(3) & -17(1) ADDED SECTIONS K-K, L-L & M-M & DRILL #19(4), ADDED LDW280-28431-1 TO -1 ASSY						
	2	2.00,2.02 2.03,3.00	8B 9B 8C 6C 5A					E.O. C2	ADDED LDW280-14138-1(1), -2(1), -3(1), & -5(1), GR500A-4D(9), & -4C (3), NAS680A08(8), NAS1131V2(4), AN960-D4(4), MS20426AD3(4), MS21042L06(4) & NAS1097AD3(12) TO -1 ASSY ADDED VIEW N-N & P-P TO -1 ASSY						
	3	2.00 3.00	7C					E.O. C3	RELOCATED LDW280-14137-3 WAS AT +X262.781						
	4	2.01 3.00	6D					E.O. C4	ADDED LDW280-28455-1 FITTING INSTL (1) REQD TO B/M & FLD OF -1 RACK ASSY				J.G.		

CHG APPROVED

LTR	GROUP LDR	VEH DES INT	STRUCTURES	STRUCTURES	WEIGHTS	RELIABILITY
E						

GRUMMAN AIRCRAFT ENGRG CORP., BETHPAGE, L. I., NEW YORK

SIZE	CODE IDENT NO.		
B	26512	LDW280-52405	E
SCALE NONE			SHEET 1.10

ENG 77.16 3-66

01 NAS 9-1100

REVISIONS

FOR CONTINUATION OF REVISIONS SEE SHEET 1.12

CHANGE LTR	ITEM NO.	SHEET NO.	ZONE	GRUMMAN INFO ONLY	DET SPEC	CLASS I	CLASS II	ENGRG ORDER	DESCRIPTION	EFFECTIVITY	DISPOSITION OF EXISTING PARTS		CHANGED BY AND DATE	ENGRG APPD	GOVT APPD
											REWORK	SCRAP			
C	5	3.00	12B					E.O.C5	IN FLD ADDED .21 DIM, SHIM, NOTES 13, 14 FOR -1	LM-2(32)	✓		L. BITTNER 1-31-67		
	6	2.02 2.03 3.00	6A 7A 8A 9A					E.O.C6	ON-1 ASSY REMOVED GR500A-4C(1), -4D(3), -4G(12), -4J (2), GR500A-5D(6), -5E(2). ADDED GR501A-4B(1), GR501A-4E(2)						
D	1	2.01 3.00	9B					E.O. D1	REMOVED LDW280-28419-1 FITTING INSTL, ADDED LDW280-51419-1 FITTING INSTL						
	2		9A					E.O. D2	IN FLD & B/M GR501A-4E(3) WAS GR500A-4G(3) PREVIOUSELY INC ON E.O. C6						
	3							E.O. D3	ON-1 INSTL IN B/M & FLD REMOVED LDW280-28420-1						
	4	2.03 3.00	10A					E.O D4	ON LDW280-52405-1 DELETED DRILL #19 (.165-.171) ADDED (.165-.171) HOLE, NAS682A08 & MS20426AD3						
	5	2.00 2.02 3.00	9D 8D					E.O. D5	ON-1 ADDED .165-.171 HOLE (30) & .190-.196 HOLE (2) & LDW280-14246-11(1), GR500A-4D(8)						
	6	3.00	9C					E.O. D6	IN FLD FOR -1 RELOCATED (2) HOLES, ADDED 5/8 DIM (2) PLACES						
E	1	2.01 3.00	7B 9B					E.O. E1	ON-1 ASSY IN FLD & B/M LDW280-51434-1 & -2 REPLACES LDW280-28434-1 & -2						
	2	3.00	7C					E.O. E2	ON-1 ADDED .165-.171 HOLE (13) & LOCATING DIMS						
	3	2.01, 3.00	6B 9B					E.O. E3	ADDED LDW280-52436-1 & -5 BALLAST INSTL TO -1 ASSY						
	4	2.00, 2.02 2.03, 3.00	10B 12C					E.O. E4	ON-1 ADDED LDW280-14129-1 & LOCATING DIMS. ADDED GR500A-4C(3), GR500A-4D(2), & ADDED VIEW R-R						
	5	3.00	7A					E.O. E5	ON-1 ADDED .165-.171 HOLE (2)						
	6							E.O. E6	IN FLD & B/M REMOVED LDW280-14138-5, DRILL #28 (.139-.145), NAS1131-Y2(4), AN960-D4(4) & MS21042L06(4)						
	7	2.02 2.03 3.00	10A 10D 6D 6A 6B 4C					E.O. E7	ON-1 ADDED LDW280M14042-5 WAS LDW280M14000-3, LDW280M14042-6 WAS LDW280M14000-4, LDW280M14044-3 WAS LDW280M14024-3, ADDED GB511K-08-4(4), GB511K-08-5(6) CONT ON SH 1.12						

CHG APPROVED

LTR	GROUP LDR	VEH DES INT	STRUCTURES	STRUCTURES	WEIGHTS	RELIABILITY					
E											

GRUMMAN AIRCRAFT ENGRG CORP., BETHPAGE, L. I., NEW YORK

SIZE	CODE IDENT NO.		
B	26512	LDW280-52405	E
SCALE NONE		SHEET 1.11	

ENG 77.16 3-66

01

NAS 9-1100

QTY PER ASSEMBLY -1	PART NO.	I&T	CODE IDENT	NOMENCLATURE OR DESCRIPTION	MATERIAL	GOVT SPEC	COML SPEC	STOCK SIZE	PROCESS SYM	FINISH NO.	ZONE
1	LDW280-52436-5	E		BALLAST INSTL	SEE DWG						6C
1	LDW280-52436-1			BALLAST INSTL							6B
1	LDW280-51434-2			FITTING INSTL							9B
1	LDW280-51434-1			FITTING INSTL							7B
1	LDW280-51419-1			FITTING INSTL							9B
1	LDW280-51455-1			FITTING INSTL							10B
1	LDW280-28433-2			SUPPORT INSTL							9C
1	LDW280-28433-1										7C
1	LDW280-28432-1										9C
1	LDW280-28431-1										10B
1	LDW280-28430-1										10C
1	LDW280-28424-2										9C
1	LDW280-28424-1										7C
1	LDW280-28423-2										7C
1	LDW280-28423-1										9C
1	LDW280-28422-1										9A
1	LDW280-28421-1			SUPPORT INSTL							8C
1	LDW280-28418-1			FITTING INSTL							6B
1	LDW280-28417-1			BRACKET INSTL							6C
1	LDW280-28416-1			RACK EXT							8C
1	LDW280-28411-2			BEAM ASSY							6B
1	LDW280-28411-1										9B
1	LDW280-28410-2										6B
1	LDW280-28410-1										9B
1	LDW280-28409-2										7C
1	LDW280-28409-1	E		BEAM ASSY	SEE DWG						9B

SYM OR NO.	PROCESS SYM OR FINISH NO.	GRUMMAN SPEC OR MILITARY SPEC	SYM OR NO.	PROCESS SYM OR FINISH NO.	GRUMMAN SPEC OR MILITARY SPEC	SYM OR NO.	PROCESS SYM OR FINISH NO.	GRUMMAN SPEC OR MILITARY SPEC

I & T: IDENTIFICATION AND TRACEABILITY IN ACCORDANCE WITH NONE

GRUMMAN AIRCRAFT ENGRG CORP., BETHPAGE, L. I., NEW YORK

SIZE	CODE IDENT NO.		
B	26512	LDW280-52405	E
SCALE NONE		SHEET 2.01	

ENG 77.2 5-64

01

NAS 9-1100

LDW280-52405F

MODEL OR END ITEM	NEXT ASSY	MODULE OR SER NO.	REQD PER MODULE OR END ITEM

PART NO.

GAEC SCH NO.

MODEL OR END ITEM	NEXT ASSY	MODULE OR SER NO.	REQD PER MODULE OR END ITEM

PART NO.

GAEC SCH NO.

MODEL OR END ITEM	NEXT ASSY	MODULE OR SER NO.	REQD PER MODULE OR END ITEM
LM	LDW280-52401	LM-2(32)	1

PART NO. LDW280-52405-1

GAEC SCH NO. 33

WORK PKG FUNCTION NO. 110 (5)

SH REV STATUS: FOR DESCRIPTION OF REV SEE SUBQ SH

SHEET	1.00	1.10	1.11	1.12		2.00	2.01	2.02	2.03
REV	F	E	E	F		F	E	F	F
SHEET	3.00								
REV	F								
SHEET									
REV									

LAST SECT LTR USED	T	GRUMMAN REL INFO F	
		PRIM NO.	JK(001)
LAST DASH NO. USED	-1	215	MP-1F-2/1/8

UNLESS OTHERWISE SPECIFIED DIMENSIONS ARE IN INCHES.
TOLERANCE UNLESS SPECIFIED
FRACTIONS - DECIMALS – ANGLES
±1/32 ±.020 ±1/2°

ORIG DWG AUTH
DETAIL SPEC REQUIREMENT
CLASS II ENGRG CHANGE
CLASS I ENGRG CHANGE

CONTRACT NO. NAS9-1100
LINE ITEM 1
DOCUMENTATION TYPE II

DRAWN BY	GENTILE 1-28-66		
LAYOUT BY	G.KATZ		
CHECKED BY	J.FASS 1-27-66 G.W		
GR LEADER	F.DERESPINIS 3-28-66		
VEH DES INT	F.DERESPINIS 3-28-66		
STRUCTURES	F. BUNCE 4-1-66	PROJ ENGR	J.ALBER 4-4-66
STRUCTURES	R.HILDERMAN 4-1-66	REL GROUP	A.CARAMANICA 4-6-66
WEIGHTS	D.ROBESCH 4-4-66		

GRUMMAN AIRCRAFT ENGRG CORP
BETHPAGE, L. I., NEW YORK

RACK ASSEMBLY
ASCENT STAGE-AFT EQUIP BAY-Z60.5

SIZE B
CODE IDENT NO. 26512
LDW280-52405 F (F)
SCALE NONE
SHEET 1.00 OF 9

ENG 77.1 12-65

SUPERSEDES LDW280-52405A 3-21-66

01

NAS 9-1100

REVISIONS FOR CONTINUATION OF REVISIONS SEE SHEET ____

CHANGE LTR	ITEM NO.	SHEET NO.	ZONE	GRUMMAN INFO ONLY	DET SPEC	CLASS I	CLASS II	ENGRG ORDER	DESCRIPTION	EFFECTIVITY	DISPOSITION OF EXISTING PARTS REWORK	DISPOSITION OF EXISTING PARTS SCRAP	CHANGED BY AND DATE	ENGRG APPD	APPD
E	7	2.02 2.03 3.00	10A					E.O. E7	REMOVED HL18-5-2(8), HL18-5-3(14), HL18-5-5(6), HL70-5 (28), LDW280M14044-4 WAS LDW280M14024-4, ADDED GB511K-08-3(62), GN512H-08(72) ADDED SHIM .015 MAX AS REQD	LM-2(32)	✓		L. BITTNER 1-31-67 JG.		
	8	2.02 3.00	6C 10C					E.O. E8	FOR -1 ADDED LDW280M14042-7 & -8 WAS LDW280M14042-5 & -6						
	9								CHANGED COML CALLOUTS TO GAEC VENDOR APPROVED EQUIV & DELETED NOTES 3 THRU 8 & 10	NOT REQD	NOT	REQD		3/1/67	
	10	3.00							REMOVED NOTES 1 & 11 ADDED NOTES 15 & 16 F2						
	11	2.01 3.00	10B						REF EO C4 IN FIELD & B/M LDW 280-51455-1 WAS LDW 280-28455-1 F2	LM-2	✓				
F	1	1.00 1.12						EO F1	ON -1, REMOVE LDW280-28455-1 FITTING INSTL (1). ADD LDW280-51455-1 FITTING INSTL (1), NOT APPLICABLE, PREVIOUSLY INCORPORATED IN DES. CHG. E 11.	LM-2 (32)	✓		J. HALE 1-26-68		
	2	2.02 3.00	5B 5C 10A				✓	EO F2 LCD-667	ON -1: ADDED HOLES .374-.381 (3/8 DRILL)(2) & .315-.322 (#0 DRILL)(14). ADDED GB511K-3-4(2), GB511K-08-4(4), REMOVED GB511K-08-5(4), GB511K-3-5(2). ADDED SECT S-S.	LM-2 (32)	✓				
	3	3.00	8C 1A				✓	EO F3 LCD 1694	ON -1: ADDED $\boxed{E19}$ (.165-.171) HOLE; 5/16, 1-7/8 DIMS.		✓				
	4	2.00 2.03 3.00	7C 7D			✓		EO F4 LCD 1978	ON -1 INSTL ADD LDW 280-16093 (CLIP)(1), MS20470AD5 (3) RIVETS. ADDED NOTE 17.		✓				
	5	2, 3, 2.02	12D				✓	EO F5	ADDED LDW280-14132-1(1), ADDED GR500A-4B(4), ADDED SECT. T-T		✓				
	6	2.00 3.00	7D				✓	LE0280-749 LCD 1978	ON INCORP. OF EO F4 LDW 280-16093-11 WAS LDW 280-16093		NOT	REQD			
	7	3.00	12D				✓	EO F7	ON -1 2 WAS 2-15/16 (REF EO F5)		✓				
	8	3.00	8C	H			✓	EO F8 LCD 2270	ON -1 ASSY ADDED .190-.196 (#11 DRILL) HOLE.		✓				
	9	2.02 3.00	8C				✓	EO F9	ON -1: ADDED LDW280P16215-13 (2), DELETED LDW280P16215-11(2)		✓				
	10	3.00	9C	E			✓	EO F10 LCD 1078	ON -1 ASSY ADDED HOLE DRILL #19 (.165-.171).	LM-2 (32)	✓			L.D.	

CHG APPROVED

LTR	GROUP LDR	VEH DES INT	STRUCTURES	STRUCTURES	WEIGHTS	RELIABILITY
E	[illegible]	J. Puster 2/3	D N 2/17			
F						

GRUMMAN AIRCRAFT ENGRG CORP., BETHPAGE, L. I., NEW YORK

SIZE	CODE IDENT NO.		
B	26512	LDW280-52405	F

SCALE NONE SHEET 1.12

ENG 77.16 3-66

01

NAS 9-1100

QTY PER ASSEMBLY -1	PART NO.	I&T	CODE IDENT	NOMENCLATURE OR DESCRIPTION	MATERIAL	GOVT SPEC	COML SPEC	STOCK SIZE	PROCESS SYM	FINISH NO.	ZONE
1	LDW280-28408-2	E		BEAM ASSY	SEE DWG						7B
1	LDW280-28408-1										9C
1	LDW280-28407-2										7C
1	LDW280-28407-1										8B
1	LDW280-28406-1			BEAM ASSY							8B
1	LDW280-16093-11			CLIP							
1	LDW280-14246-11			SUPPORT							10B
1	LDW280-14138-3			SUPPORT ASSY							10C
1	LDW280-14138-2										10C
1	LDW280-14138-1										6C
1	LDW280-14137-17										8C
3	LDW280-14137-15										12A
1	LDW280-14137-3										8C
3	LDW280-14137-1										9B
1	LDW280-14132-7										7C
1	LDW280-14132-5										9C
2	LDW280-14132-3										7B
6	LDW280-14132-1			SUPPORT ASSY							8B
1	LDW280-14131-15			HAT							8B
1	LDW280-14131-13			HAT							8B
1	LDW280-14131-11			HAT							7B
2	LDW280-14129-11			HAT							9C
1	LDW280-14129-1			HAT ASSY							10B
1	LDW280-14114-11			TEE							7C
1	LDW280-14113-11			BEAM							8B
1	LDW280-14112-17			BEAM	SEE DWG						10C
	LDW280-52405-1	E		RACK ASSY					NONE	NONE	8A

SYM OR NO.	PROCESS SYM OR FINISH NO.	GRUMMAN SPEC OR MILITARY SPEC	SYM OR NO.	PROCESS SYM OR FINISH NO.	GRUMMAN SPEC OR MILITARY SPEC	SYM OR NO.	PROCESS SYM OR FINISH NO.	GRUMMAN SPEC OR MILITARY SPEC

I & T: IDENTIFICATION AND TRACEABILITY IN ACCORDANCE WITH NONE

GRUMMAN AIRCRAFT ENGRG CORP., BETHPAGE, L. I., NEW YORK

SIZE	CODE IDENT NO.		
B	26512	LDW280-52405	F

SCALE NONE

SHEET 2.00

(F)

ENG 77.2 5-64

01

NAS 9-1100

QTY PER ASSEMBLY -1	PART NO.	I&T	CODE IDENT	NOMENCLATURE OR DESCRIPTION	MATERIAL	GOVT SPEC	COML SPEC	STOCK SIZE	PROCESS SYM	FINISH NO.	ZONE
2	GR500A-5H	E		RIVET	GRUMMAN STD						
8	GR500A-5F										
19	GR500A-5E										
69	GR500A-5D										
106	GR500A-5C										
32	GR500A-5B										
4	GR500A-4J										
1	GR500A-4H										
74	GR500A-4G										
92	GR500A-4E										
139	GR500A-4D										
105	GR500A-4C										
40	GR500A-4B			RIVET							
90	GN512H-08			NUT,COLLAR							
10	GN512H-3			NUT,COLLAR							
5	GB511K-08-5			BOLT							
23	GB511K-08-4			BOLT							
62	GB511K-08-3			BOLT							
8	GB511K-3-5			BOLT	GRUMMAN STD						
6	AN960D8			WASHER	STD PART						
2	GB511K-3-4			BOLT	GRUMMAN STD						
2	LDW280P16215-13			FAIRLEAD	SEE DWG						7C
1	LDW280M14044-4			FITTING							10A
1	LDW280M14044-3										6A
1	LDW280M14042-8										10C
1	LDW280M14042-7										6C
1	LDW280M14029-1										8C
1	LDW280M14025-1	E		FITTING	SEE DWG						8B

SYM OR NO.	PROCESS SYM OR FINISH NO.	GRUMMAN SPEC OR MILITARY SPEC	SYM OR NO.	PROCESS SYM OR FINISH NO.	GRUMMAN SPEC OR MILITARY SPEC	SYM OR NO.	PROCESS SYM OR FINISH NO.	GRUMMAN SPEC OR MILITARY SPEC

I&T: IDENTIFICATION AND TRACEABILITY IN ACCORDANCE WITH NONE

GRUMMAN AIRCRAFT ENGRG CORP., BETHPAGE, L. I., NEW YORK

SIZE	CODE IDENT NO.		
B	26512	LDW280-52405	F
SCALE NONE		SHEET 2.02	

(F)

ENG 77.2 5-64

01

NAS 9-1100

QTY PER ASSEMBLY -1	PART NO.	I&T	CODE IDENT	NOMENCLATURE OR DESCRIPTION	MATERIAL	GOVT SPEC	COML SPEC	STOCK SIZE	PROCESS SYM	FINISH NO.	ZONE
6	NAS1132V5	E		SCREW	STD PART						
24	NAS1097AD3			RIVET							
4	NAS684A08			NUT, PLATE							
1	NAS682A08										
1	NAS682A3										
31	NAS680A08			NUT, PLATE							
6	MS21042L08			NUT							
	MS20470DD5			RIVET							
	MS20470B4										
	MS20470AD3										
54	MS20426AD3				STD PART						
2	MS20470AD5				STD PART						
2	GR501A-5C				GRUMMAN STD						
1	GR501A-4E										
3	GR501A-4C										
17	GR501A-4B										
4	GR500B-5-3										
4	GR500B-5-2										
6	GR500B-4-4	E		RIVET	GRUMMAN STD						

SYM OR NO.	PROCESS SYM OR FINISH NO.	GRUMMAN SPEC OR MILITARY SPEC	SYM OR NO.	PROCESS SYM OR FINISH NO.	GRUMMAN SPEC OR MILITARY SPEC	SYM OR NO.	PROCESS SYM OR FINISH NO.	GRUMMAN SPEC OR MILITARY SPEC

I & T: IDENTIFICATION AND TRACEABILITY IN ACCORDANCE WITH NONE

GRUMMAN AIRCRAFT ENGRG CORP., BETHPAGE, L. I., NEW YORK

SIZE	CODE IDENT NO.		
B	26512	LDW280-52405	F
SCALE NONE		SHEET 2.03	

(F)

ENG 77.2 5-64

01

NAS 9-1100

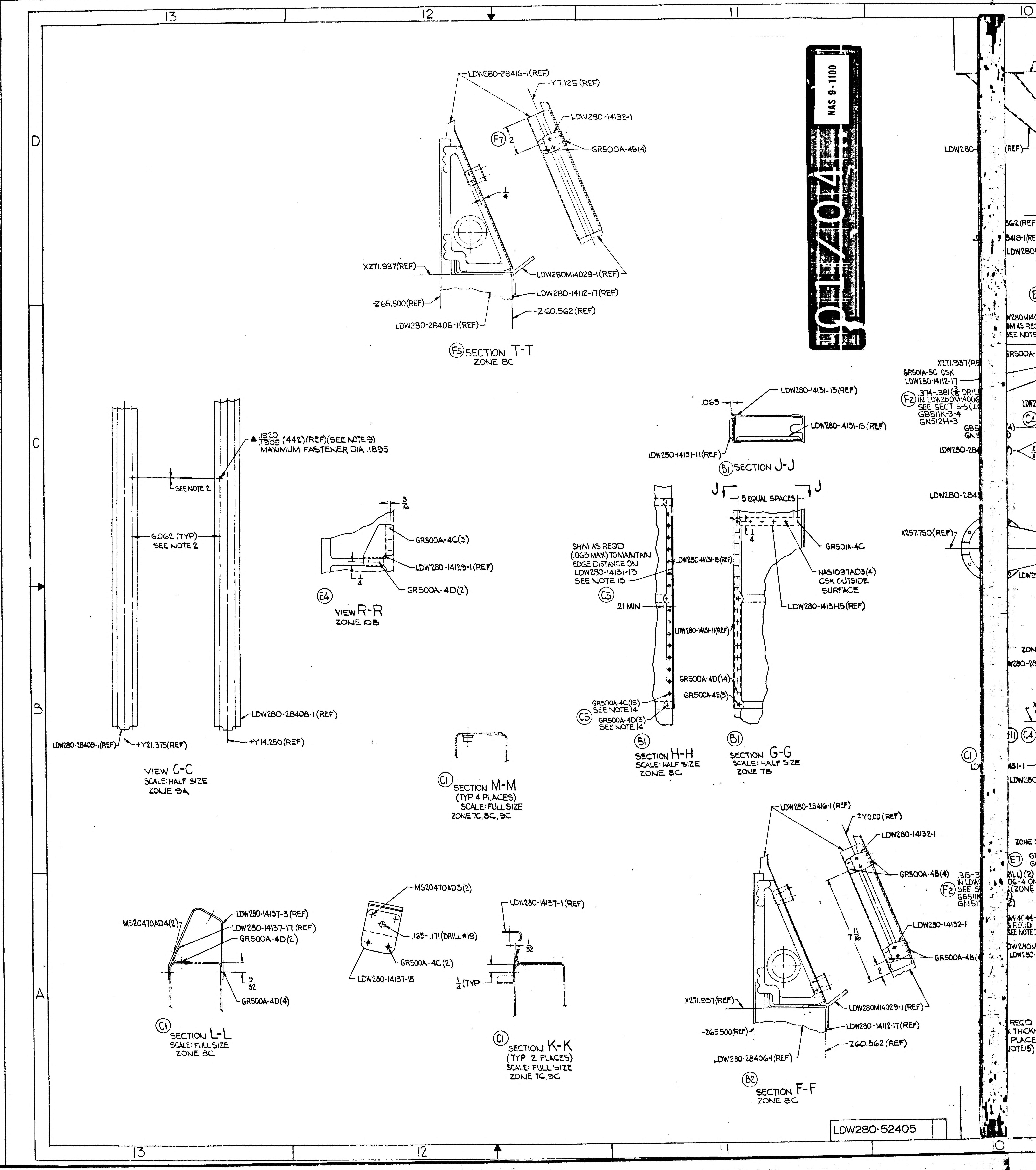
13
12
11
10
D
C
B
A
LDW280-28416-1(REF)
-Y7.125 (REF)
LDW280-14132-1
F7
2
GR500A-4B(4)
1/4
X271.937(REF)
LDW280M14029-1(REF)
LDW280-14112-17(REF)
-Z65.500(REF)
-Z60.562(REF)
LDW280-28406-1(REF)
F5 SECTION T-T
ZONE 8C
.063
LDW280-14131-13(REF)
LDW280-14131-15(REF)
LDW280-14131-11(REF)
B1 SECTION J-J
▲ .1920/.1905 (442)(REF)(SEE NOTE 9)
MAXIMUM FASTENER DIA .1895
SEE NOTE 2
6.062 (TYP)
SEE NOTE 2
3/16
GR500A-4C(3)
LDW280-14129-1(REF)
1/4
GR500A-4D(2)
E4
VIEW R-R
ZONE 10B
J
J
5 EQUAL SPACES
1/4
GR501A-4C
NAS1097AD3(4)
CSK OUTSIDE
SURFACE
LDW280-14131-15(REF)
SHIM AS REQD
(.063 MAX) TO MAINTAIN
EDGE DISTANCE ON
LDW280-14131-13
SEE NOTE 13
C5
LDW280-14131-13(REF)
.21 MIN
LDW280-14131-11(REF)
GR500A-4D(14)
GR500A-4E(3)
GR500A-4C(15)
SEE NOTE 14
C5
GR500A-4D(3)
SEE NOTE 14
B1
SECTION H-H
SCALE: HALF SIZE
ZONE 8C
B1
SECTION G-G
SCALE: HALF SIZE
ZONE 7B
LDW280-28408-1(REF)
LDW280-28409-1(REF)
+Y21.375(REF)
+Y14.250(REF)
VIEW C-C
SCALE: HALF SIZE
ZONE 9A
C1
SECTION M-M
(TYP 4 PLACES)
SCALE: FULL SIZE
ZONE 7C, 8C, 9C
LDW280-28416-1(REF)
±Y0.00 (REF)
LDW280-14132-1
GR500A-4B(4)
7 11/16
LDW280-14132-1
2
GR500A-4B(4)
X271.937(REF)
LDW280M14029-1(REF)
LDW280-14112-17(REF)
-Z65.500(REF)
-Z60.562(REF)
LDW280-28406-1(REF)
B2
SECTION F-F
ZONE 8C
MS20470AD4(2)
LDW280-14137-3(REF)
LDW280-14137-17(REF)
GR500A-4D(2)
9/32
GR500A-4D(4)
C1
SECTION L-L
SCALE: FULL SIZE
ZONE 8C
MS20470AD3(2)
.165-.171(DRILL #19)
GR500A-4C(2)
LDW280-14137-15
LDW280-14137-1(REF)
1/32
1/4 (TYP
C1
SECTION K-K
(TYP 2 PLACES)
SCALE: FULL SIZE
ZONE 7C, 9C
X271.937(REF)
GR501A-5C CSK
LDW280-14112-17
F2
.374-.381 (3/8 DRILL)
IN LDW280M1400
SEE SECT. S-S
GB511K-3-4
GN512H-3
X257.750(REF)
LDW280-
C1
E7
F2
REQD

01/04

NAS 9-1100

LDW280-52405

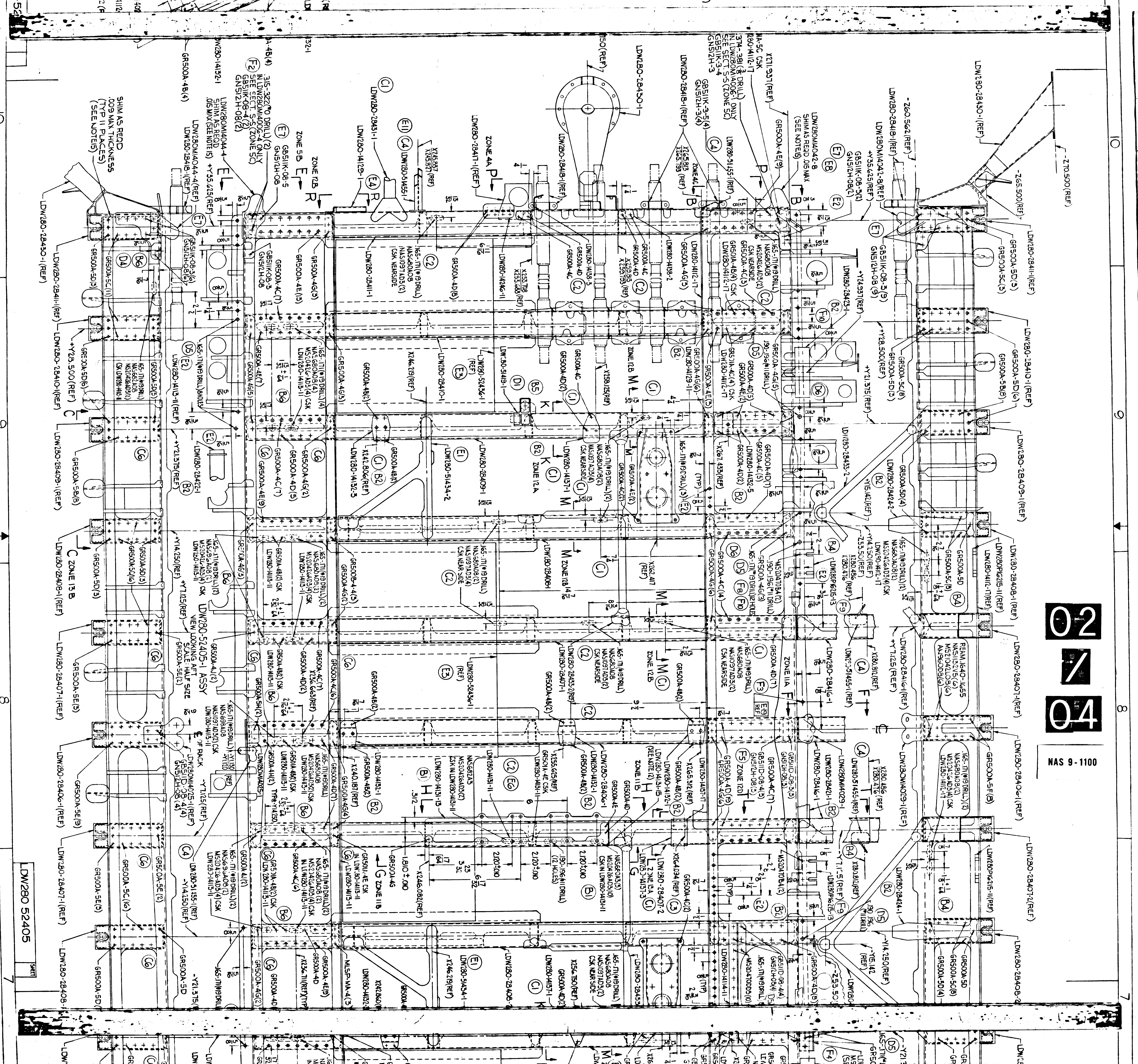

LDW280 52405
LDW280-52405-1 ASSY
VIEW LOOKING AFT
HALF SIZE
ZONE 13 B
ZONE 12 B
ZONE 12 A
ZONE 11 A
ZONE 11 B
ZONE 4A
ZONE 5B
ZONE 12 B
10
9
8
7

02
/
04

NAS 9-1100

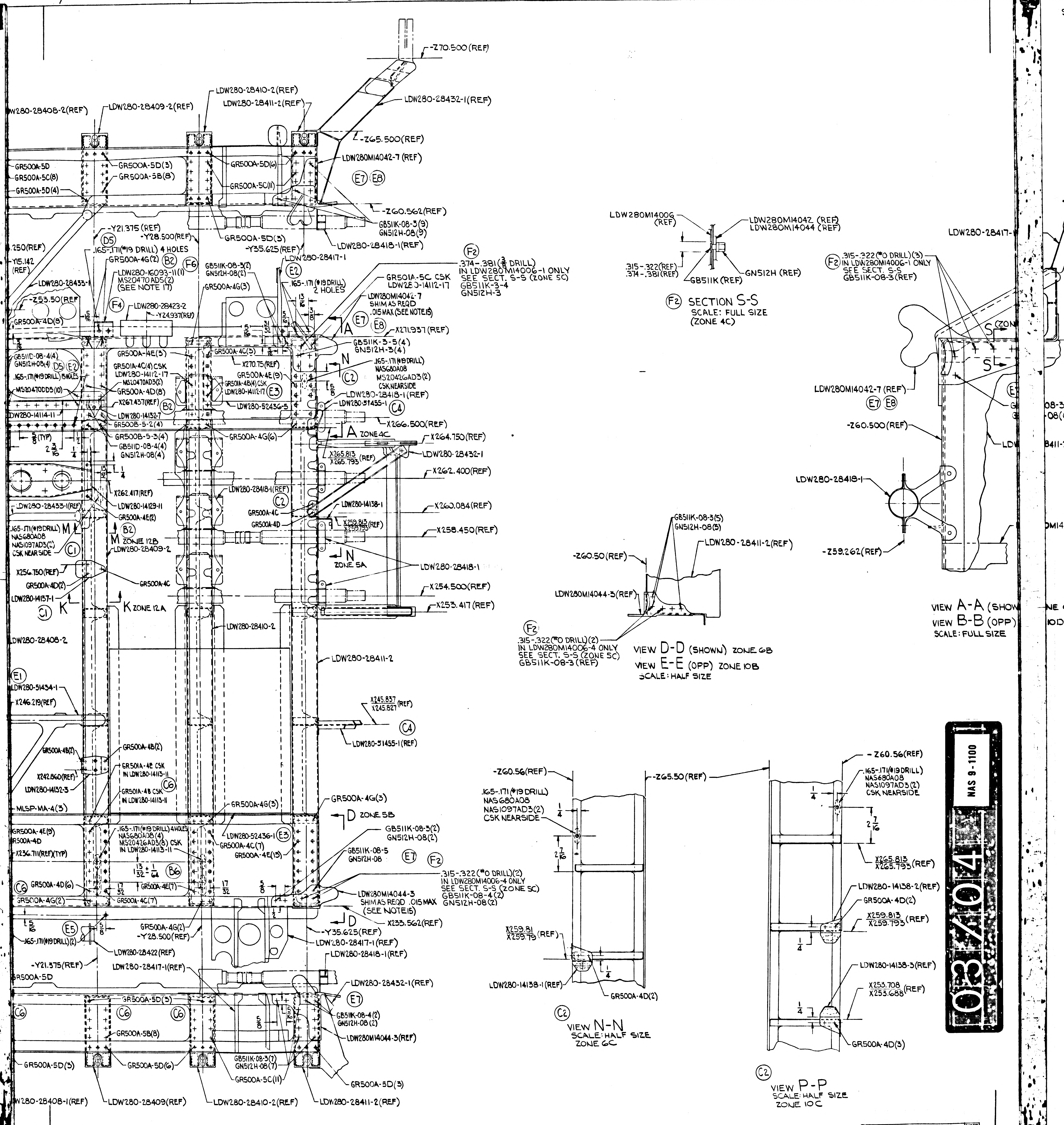

7
6
5
4
-Z70.500(REF)
LDW280-28410-2(REF)
LDW280-28411-2(REF)
LDW280-28408-2(REF)
LDW280-28409-2(REF)
LDW280-28432-1(REF)
Z -Z65.500(REF)
LDW280M14042-7 (REF)
E7 E8
GR500A-5D
GR500A-5C(8)
GR500A-5D(4)
GR500A-5D(3)
GR500A-5B(8)
GR500A-5D(6)
GR500A-5C(11)
-Z60.562(REF)
GB511K-08-3(9)
GN512H-08(9)
-Y21.375(REF)
-Y28.500(REF)
GR500A-5D(3)
-Y35.625(REF)
LDW280-28418-1(REF)
.250(REF)
Y15.142 (REF)
D5
.165-.171(#19 DRILL) 4 HOLES
GR500A-4G(2) B2
F6
GB511K-08-3(2)
GN512H-08(2)
LDW280-28417-1
E2
LDW280-28433-1
LDW280-16093-11(1)
MS20470AD5(2)
(SEE NOTE 17)
GR500A-4G(3)
.165-.171(#19 DRILL) 2 HOLES
-Z53.50(REF)
F4
LDW280-28423-2
-Y24.937(REF)
GR500A-4D(8)
F2
.374-.381(3/8 DRILL)
IN LDW280M14006-1 ONLY
SEE SECT. S-S (ZONE 5C)
GB511K-3-4
GN512H-3
GR501A-5C CSK
LDW280-14112-17
LDW280M14042-7
SHIM AS REQD
.015 MAX (SEE NOTE 15)
A E7 E8
X271.937(REF)
GB511K-3-5(4)
GN512H-3(4)
GR500A-4E(3)
GR500A-4C(3)
X270.75(REF)
N
.165-.171(#19 DRILL)
NAS680A08
MS20426AD3(2)
CSK NEARSIDE
GB511D-08-4(4)
GN512H-08(4) D5 E2
.165-.171(#19 DRILL) 15 HOLES
MS20470DD5(10)
GR501A-4C(4) CSK
LDW280-14112-17
MS20470AD3(2)
GR500A-4D(8)
X267.437(REF) B2
GR501A-4B(4) CSK
LDW280-14112-17 E3
GR500A-4E(9)
C2
LDW280-28418-1(REF)
C4
LDW280-51455-1
LDW280-52436-5
LDW280-14114-11
LDW280-14132-7
GR500B-5-3(4)
GR500B-5-2(4)
GB511D-08-4(4)
GN512H-08(4)
GR500A-4G(6)
-X266.500(REF)
A ZONE 4C
X264.750(REF)
X265.813
X265.793 (REF)
LDW280-28432-1
5/8 (TYP)
2 3/16
L
X262.417(REF)
X262.400(REF)
LDW280-14129-11
LDW280-28433-1(REF)
GR500A-4E(2)
LDW280-28418-1(REF)
C2
GR500A-4C
GR500A-4D
LDW280-14138-1
X259.815
X259.795 (REF)
X260.084(REF)
X258.450(REF)
.165-.171(#19 DRILL) M
NAS680A08
NAS1097AD3(2)
CSK NEARSIDE C1
B2
M ZONE 12B
LDW280-28409-2
N
ZONE 5A
LDW280-28418-1
X254.750(REF)
GR500A-4D(2)
GR500A-4C
LDW280-14137-1
C1 K
K ZONE 12A
X254.500(REF)
X253.417(REF)
LDW280-28408-2
LDW280-28410-2
LDW280-28411-2
E1
LDW280-51434-1
X246.219(REF)
X245.837
X245.827 (REF)
C4
LDW280-51455-1(REF)
GR500A-4B(2)
GR500A-4B(2)
GR501A-4E CSK
IN LDW280-14113-11
X242.860(REF)
LDW280-14132-3
C6
GR501A-4B CSK
IN LDW280-14113-11
MLSP-MA-4(3)
GR500A-4G(3)
GR500A-4G(3)
D ZONE 5B
GR500A-4E(9)
GR500A-4D
X236.711(REF)(TYP)
.165-.171(#19 DRILL) 4 HOLES
NAS680A08(4)
MS20426AD3(8) CSK
IN LDW280-14113-11
LDW280-52436-1 E3
GR500A-4C(7)
GR500A-4E(15)
GB511K-08-3(2)
GN512H-08(2)
GB511K-08-5
GN512H-08
E7 F2
1 13/32 ± 1/64 B6
C6 GR500A-4D(6)
GR500A-4E(7)
17/32
17/32
5/8
GR500A-4G(2)
GR500A-4C(7)
.315-.322(#0 DRILL)(2)
IN LDW280M14006-4 ONLY
SEE SECT. S-S (ZONE 5C)
GB511K-08-4(2)
GN512H-08(2)
LDW280M14044-3
SHIM AS REQD .015 MAX
(SEE NOTE 15)
D
X233.562(REF)
E5
.165-.171(#19 DRILL)(2)
5/8
GR500A-4G(2)
-Y28.500(REF)
-Y35.625(REF)
LDW280-28417-1(REF)
LDW280-28418-1(REF)
LDW280-28422(REF)
-Y21.375(REF)
LDW280-28417-1(REF)
GR500A-5D
LDW280-28432-1(REF)
E7
GR500A-5D(3)
C6
C6
C6
GR500A-5B(8)
GB511K-08-4(2)
GN512H-08(2)
LDW280M14044-3(REF)
GB511K-08-3(7)
GN512H-08(7)
GR500A-5C(11)
GR500A-5D(3)
GR500A-5D(6)
GR500A-5D(3)
LDW280-28408-1(REF)
LDW280-28409(REF)
LDW280-28410-2(REF)
LDW280-28411-2(REF)
LDW280M14006 (REF)
LDW280M14042 (REF)
LDW280M14044 (REF)
.315-.322(REF)
.374-.381(REF)
GB511K (REF)
GN512H (REF)
F2
.315-.322(#0 DRILL)(3)
IN LDW280M14006-1 ONLY
SEE SECT. S-S
GB511K-08-3(REF)
LDW280-28417-
S
S
LDW280M14042-7 (REF)
E7 E8
-Z60.500(REF)
LDW280-28418-1
-Z59.262(REF)
GB511K-08-3(5)
GN512H-08(5)
LDW280-28411-2(REF)
-Z60.50(REF)
LDW280M14044-3(REF)
F2
.315-.322(#0 DRILL)(2)
IN LDW280M14006-4 ONLY
SEE SECT. S-S (ZONE 5C)
GB511K-08-3(REF)
-Z60.56(REF)
-Z65.50(REF)
.165-.171(#19 DRILL)
NAS680A08
NAS1097AD3(2)
CSK NEARSIDE
1/4
2 7/16
X259.81
X259.79 (REF)
LDW280-14138-1(REF)
GR500A-4D(2)
1/4
C2
- Z60.56(REF)
.165-.171(#19 DRILL)
NAS680A08
NAS1097AD3(2)
CSK NEARSIDE
1/4
2 7/16
X265.813
X265.793 (REF)
LDW280-14138-2(REF)
GR500A-4D(2)
X259.813
X259.793 (REF)
1/4
LDW280-14138-3(REF)
X253.708
X253.688 (REF)
1/4
GR500A-4D(3)
C2

F2 SECTION S-S
SCALE: FULL SIZE
(ZONE 4C)

VIEW A-A (SHOW
VIEW B-B (OPP)
SCALE: FULL SIZE

VIEW D-D (SHOWN) ZONE 6B
VIEW E-E (OPP) ZONE 10B
SCALE: HALF SIZE

VIEW N-N
SCALE: HALF SIZE
ZONE 6C

VIEW P-P
SCALE: HALF SIZE
ZONE 10C

03/04 NAS 9-1100

LDW280 52405 SHEET 3

SYMBOL LEGEND

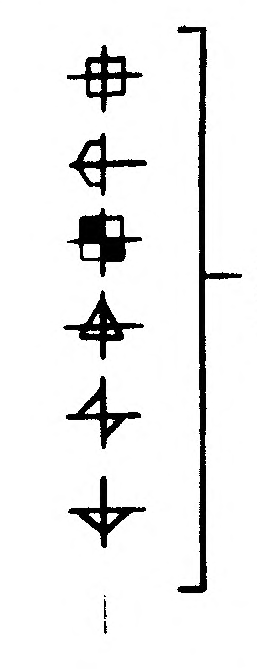

NOTES:

~~1. SHIM TO BE MADE FROM AL LAMINATED SHIM .003 LAMINATIONS 5052-H39 & MAY BE PURCHASED FROM LAMINATED SHIM CO INC GLENBROOK CONN (CODE IDENT 75495~~

2. AFTER ASSEMBLY CORRESPONDING HOLES IN ADJACENT BEAMS SHALL BE WITHIN .006 AS SHOWN

3. ~~HI-LOK BOLTS & COLLARS TO BE PURCHASED FROM HI-SHEAR CORP TORRANCE CALIF (CODE IDENT 73197)~~

4. ~~FOR MLSP-M5, GR500A-5 & GR501A-5 FINAL HOLE SIZE TO BE .160-.164~~

~~5. FOR MLSP-M4, GR500A-4 & GR501A-4 FINAL HOLE SIZE TO BE .129-.132~~

6. ~~FOR HL18-5 FINAL HOLE SIZE TO BE .164-.166~~

7. ~~FOR HL10V6 FINAL HOLE SIZE TO BE .1895-.191~~

~~8. MLSP-M TO BE PURCHASED FROM HUCK MFG CO 2480 BELLEVILL AVE DETROIT MICH (CODE IDENT 29666)~~

9. FOR HOLES MARKED ▲ SEE THE FOLLOWING DWGS FOR CORRESPONDING HOLE PATTERNS:
LSC300-140, LSC300-330, LSC310-5, LSC360-2, LSC360-5, LSC360-8, LSC370-100, LSC380-00130, LSC380-00170, LSC380-00250, LSC380-00270, LSC390-6, LSC390-21000, LSC390-25

~~10. HI-LOK PINS & COLLARS TO BE IN ACCORDANCE WITH APPLICABLE PORTION OF MIL-N-25027 & NAS498~~

~~11. ON INTIAL RELEASE OF THIS DWG LDW280-28405-1 (A1 CHANGE) IS IDENTICAL TO & SHALL BE REIDENTIFIED AS LDW280-52405-1~~

12. BOND LDW280-14131-15 TO LDW280-52405-1 RACK ASSY WITH EPON 934 IN ACCORDANCE WITH LSP14-22500 ROOM TEMPERATURE PERMISSABLE

13. SHIM AS REQD USING AL ALLOY 2024-T3, QQ-A-250/4, FINISH 76

14. IT IS PERMISSIBLE TO REPLACE GR500A-4 RIVETS WITH MS20470AD4 RIVETS

15. SHIM TO BE MADE FROM MIL-S-22499A, COMP I, TYPE I, CLASS 2

16. INSTALL FASTENERS PER LSP14-15303 & LSP14-15306

17. PREPARE ADJOINING SURFACES PER LSP14-13334.

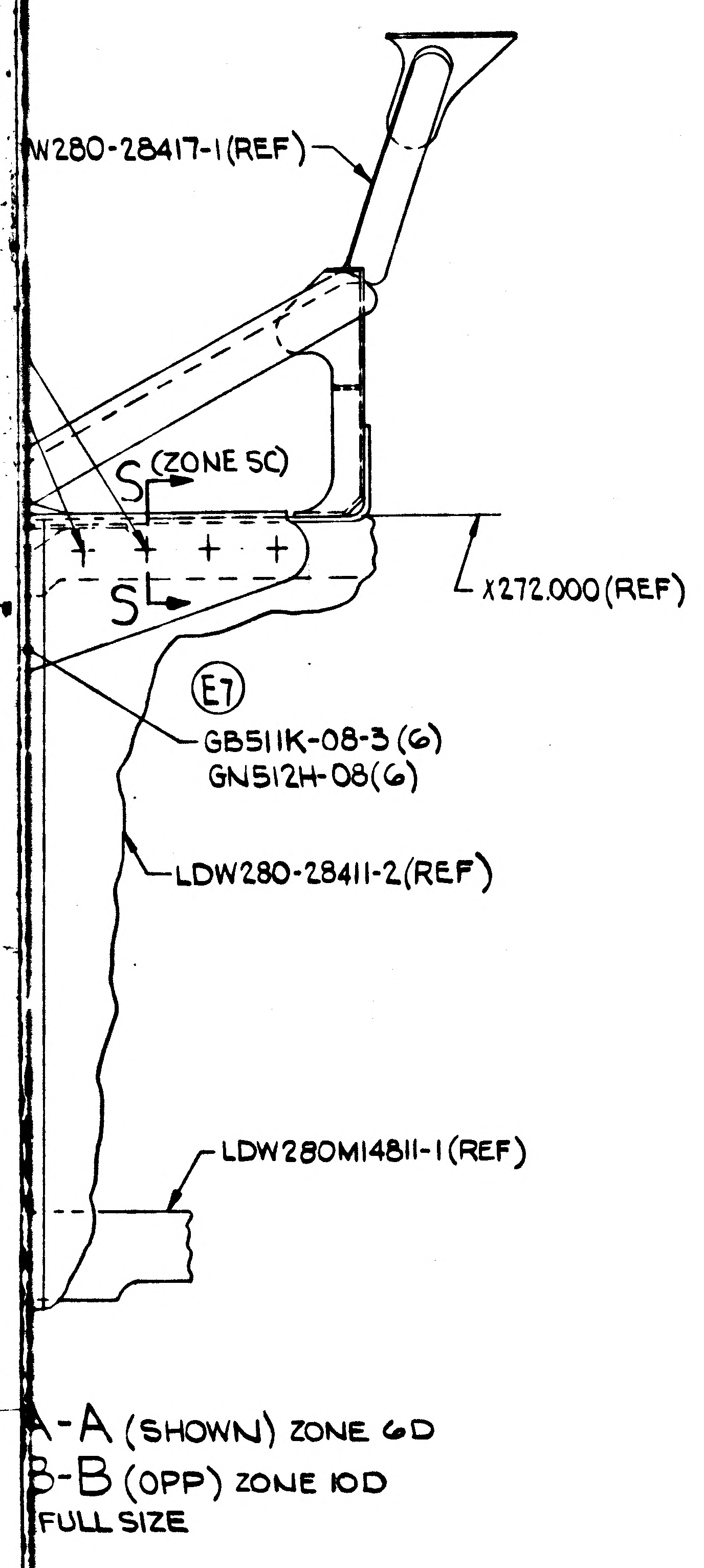

Q4/04

NAS 9-1100

MANUFACTURING OPERATIONS UNLESS OTHERWISE SPECIFIED NOTES CHECKED √ APPLY TO THIS DWG.	
PART NUMBER AND ALL OTHER MARKINGS IN REGION MARKED ⊠ USE BOTH SIDES IF NECESSARY.	
FILLET AND INSIDE CORNER RADII TOLERANCES .016R TO .062R ± .010 .063R TO .250R ± .015 OVER .250R ± .030	
DEPTH SHOWN FOR TAPPED HOLES IS FULL THDS. 2-3 IMP THDS. BEYOND PERMISSIBLE.	
EXTERNAL THREAD LENGTH SHOWN INCLUDES 2 IMPERFECT THREADS MAX.	
DO NOT CADMIUM PLATE & PAINT HOLES OR SURFACES MARKED WITH DOUBLE ASTERISK.	
MISMATCH STEP OF ± .005 PERMISSIBLE DUE TO CHANGE OF CUTTERS AT INSIDE INTERSECTING SURFACES.	
DIAMETERS MARKED MUST BE CONCENTRIC WITHIN FULL INDICATOR READING	
HOLES MUST BE KEPT FREE OF CHROME PLATING SOLUTION.	
ALL DIMENSIONS SHOWN TO BE MET AFTER CADMIUM PLATING. THICKNESS OF PLATE .0003 MIN. TO .0005 MAX. MIN. THICKNESS TO BE .0002 ON THREADED AREAS. NO ALLOWANCE FOR PLATING IN HOLES	
125 √ SURFACE ROUGHNESS INCLUDING REAMED HOLES PER MIL-STD-10	
200 √ FOR ALL DRILLED HOLES	
REMOVE ALL BURRS. BREAK ALL EDGES .015-.031	
INSPECTION INFORMATION MINIMUM PERMISSIBLE AVERAGE EDGE DISTANCE MARKED IS	
SYMBOL √ DENOTES SURFACE TO BE MACHINED	
UNLESS OTHERWISE SPECIFIED TOLERANCE ON FLANGES IS ± 1/32	
LENGTHS OF AN, NAS & MS AL ALY RIVETS SHORTER THAN 1 INCH ARE NOT SPECIFIED.	
TOLERANCE ON LOFTED DELINEATIONS IS	

DWG SIZE 40 X 130

PRINTING INFO ONLY

FULL SIZE SHEET AREA (36 x 128) = 32 SQ. FT.

1/2 SIZE SHEET AREA (1/4 OF FULL) = 8 SQ. FT.

PRINT TRIM LINE

F3 KEY TO PURPOSE OF HOLES, ETC., MARKED REF

E-19 REF ELECTRICAL .165-.171 (#19 DRILL)

	GRUMMAN AIRCRAFT ENGRG CORP., BETHPAGE, L. I., NEW YORK
LM MODEL OR END ITEM	SIZE K · CODE IDENT NO. 26512 · LDW280-52405 · F
	SCALE HALF & NOTED · SHEET 3

LDW280-52405 F

LDW280-52405 F

4 FRAMES

GRUMMAN AIRCRAFT ENGINEERING CORP.
CODE IDENT NO. 26512
ENGINEERING ORDER

ENG 32 1 REV 3-65

DWG. NO. LDW280-52405
EO NO. B5
CONTROL INFO NO. LDW 280-5600

ADD LDW280-28419-1 FITTING INSTL. TO LDW280-52405-1 RACK ASS'Y

(3)

DETAIL SPEC REQ		CL II ENGRG CHG		CL I ENGRG CHG	

REASON FOR EO: INCORPORATE FITTING INSTL. (ACCELEROMETER SUPT) ON RACK ASS'Y

DESCRIPTION OF EO: ADD LDW280-28419-1 FITTING INSTL TO -1 ASS'Y

Ⓡ GAEC EO RELEASE: MD 16

MODEL	EFFECTIVITY		
	PROCURING ACTIVITY NO.	GAEC UNIT NO	SUB CONTR UNIT NO
LEM		LEM-2(32)	

DRAWING CHANGE REQD: REVISE DWG ✓ · RECORD EO
DISPOSITION OF PARTS: REWORK — · SCRAP —

APPROVED BY	F.NR			F.NR				LL
DATE	3/18/66	3-25		3/17/66	3/15		3/25/66	3/28/66
	VDI	~~SUPPORT~~ WTS	RELIAB GROUP	GROUP LEADER	STRESS GROUP	LIAISON ENGRG	PROJ ENGRG	~~GOVT~~

PRIORITY: C
DRAWING TITLE: RACK ASSEMBLY A/S~AFT EQUIP. BAY~ -Z60.500
DRAWING NO.: LDW280-52405
EO NO.: B5

ISSUED BY S LEINOFF 3-17-66 x7033 SECTION VDI GROUP NO. 335 PL 35

01

NAS 9-1100

GRUMMAN AIRCRAFT ENGINEERING CORP.
CODE IDENT NO. 26512
ENGINEERING ORDER

ENG 32.2 REV 3-65

DWG. NO.	LDW280-52405
CONTROL INFO NO.	LEM-3-2887
EO NO.	B6

THIS E.O. IS A REVISION OF AND SUPERSEDES E.O. B3

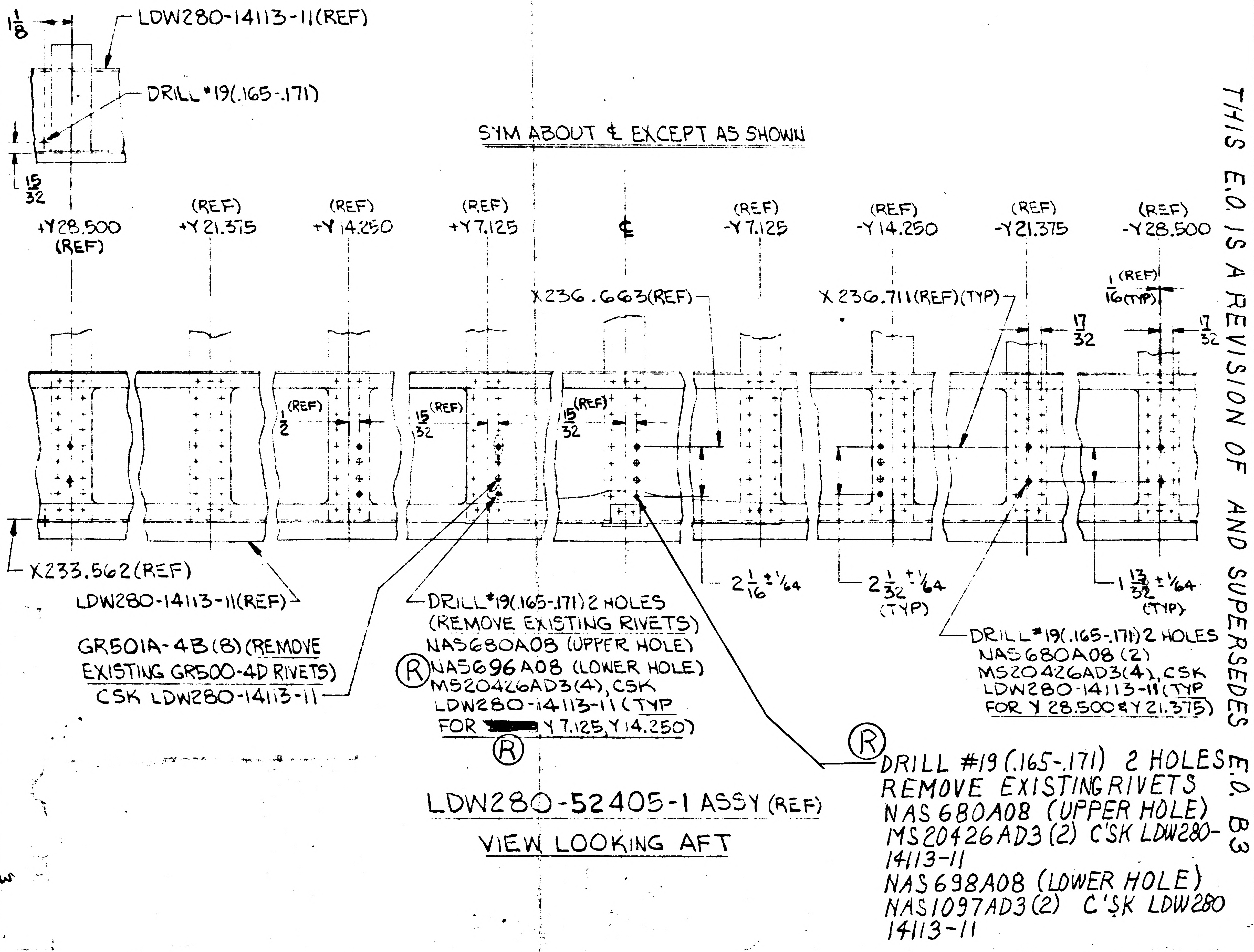

LDW280-14113-11(REF)
DRILL #19(.165-.171)
1/10
15/32
SYM ABOUT ℄ EXCEPT AS SHOWN
+Y28.500 (REF)
(REF) +Y21.375
(REF) +Y14.250
(REF) +Y7.125
℄
(REF) -Y7.125
(REF) -Y14.250
(REF) -Y21.375
(REF) -Y28.500
X236.663(REF)
X236.711(REF)(TYP)
1/16 (REF)(TYP)
17/32
17/32
1/2 (REF)
15/32 (REF)
15/32 (REF)
X233.562(REF)
LDW280-14113-11(REF)
2 1/16 ±1/64
2 1/32 ±1/64 (TYP)
1 13/32 ±1/64 (TYP)
GR501A-4B(8)(REMOVE EXISTING GR500-4D RIVETS) CSK LDW280-14113-11
DRILL #19(.165-.171) 2 HOLES (REMOVE EXISTING RIVETS) NAS680A08 (UPPER HOLE) Ⓡ NAS696A08 (LOWER HOLE) MS20426AD3(4), CSK LDW280-14113-11 (TYP FOR [redacted] Y7.125, Y14.250) Ⓡ
DRILL #19(.165-.171) 2 HOLES NAS680A08 (2) MS20426AD3(4), CSK LDW280-14113-11 (TYP FOR Y28.500 & Y21.375)
Ⓡ DRILL #19 (.165-.171) 2 HOLES REMOVE EXISTING RIVETS NAS680A08 (UPPER HOLE) MS20426AD3(2) C'SK LDW280-14113-11 NAS698A08 (LOWER HOLE) NAS1097AD3(2) C'SK LDW280 14113-11
3

LDW280-52405-1 ASSY (REF)
VIEW LOOKING AFT

DETAIL SPEC REQ		CL II ENGRG CHG	CL I ENGRG CHG

REASON FOR EO
PROVIDE PLATE NUTS FOR PIPE SUPPORT FITTINGS

MODEL	EFFECTIVITY: PROCURING ACTIVITY NO.	EFFECTIVITY: GAEC UNIT NO.	EFFECTIVITY: SUB CONTR UNIT NO.
LEM		LEM-2(32)	

DESCRIPTION OF EO
SUPERSEDED E.O. B3
ON -1 ASSY. ADDED NAS680A08 (10), NAS684A08 (4), GR501A-4B(8), MS20426AD3(28). REMOVED GR500A-4D(15), GR500A-4H(1). ADDED DRILL #19(.165-.171) 15 HOLES

DRAWING CHANGE REQD: REVISE DWG	DRAWING CHANGE REQD: RECORD EO	DISPOSITION OF PARTS: REWORK	DISPOSITION OF PARTS: SCRAP	APPROVED BY						GAEC EO RELEASE
✓		✓		JDR			~	BM Lewin 4-28-66	Dwight 4/29/66	Bot. 4/29/66
			DATE	5-1-66						
				VDI						
				SUPPORT	RELIAB. GROUP	GROUP LEADER	STRESS GROUP	LIAISON ENGRG	PROJ ENGRG	

PRIORITY	DRAWING TITLE	DRAWING NO.	EO NO.
C	RACK ASSY ASCENT STAGE-AFT EQ BAY - Z 60.50	LDW280-52405	B6

VIC BOLLO x2151 x1033

ISSUED BY G. KATZ 3-9-66 SECTION VDI GROUP NO. 335 PL 35

01

ENG 32.1 REV 3-65

GRUMMAN AIRCRAFT ENGINEERING CORP.
CODE IDENT NO. 26512
ENGINEERING ORDER

DWG. NO. LDW 280-52405		EO NO. C4
CONTROL INFO NO. LDW 280-6492		

ADD LDW 280-28455-1 FITTING INSTALLATION (1) REQ'D TO BM. & F/D OF -1 RACK ASSY.

DETAIL SPEC REQ		CL II ENGRG CHG		CL I ENGRG CHG		5

REASON FOR EO: PROVIDE SUPPORT FOR THERMAL SHIELD - CAGE INSTL.

DESCRIPTION OF EO: ADDED LDW 280-28455-1 FTG. INSTL (1) REQD TO BM & F/D OF -1 RACK ASSY

Ⓡ JR19 GAEC C EO RELEASE

MODEL	PROCURING ACTIVITY NO.	GAEC UNIT NO.	SUB CONTR UNIT NO.
LEM		LEM-2 (32)	

DRAWING CHANGE REQD		DISPOSITION OF PARTS	
REVISE DWG	RECORD EO	REWORK	SCRAP
✓		✓	

APPROVED BY	F.W.K.			—	BJV		[illegible]	AC
DATE	5-2-66	5-3		~	5/3		5-6	5-3-66
	VDI	~~SUPPORT~~ WTS	RELIAB GROUP	GROUP LEADER	STRESS GROUP	LIAISON ENGRG	PROJ ENGRG	

PRIORITY	DRAWING TITLE	DRAWING NO.	EO NO.
C	RACK ASSEMBLY A/S - AFT EQUIP. BAY ~~-260.50~~	LDW 280-52405	C4

ISSUED BY FRANK CHRISTINA FC X1278 4/28/66 SECTION VEH. DESIGN INT. GROUP NO. 335 PL 35

01

NAS 9-1100

NG 32.1 REV 3-60 **LIAISON ENGINEERING #5** **GRUMMAN AIRCRAFT ENGINEERING CORP.**
CODE IDENT NO. 26512
ENGINEERING ORDER

DWG. NO. LDW280-52405 EO NO. C-5
CONTROL INFO NO. LEM-5-5956

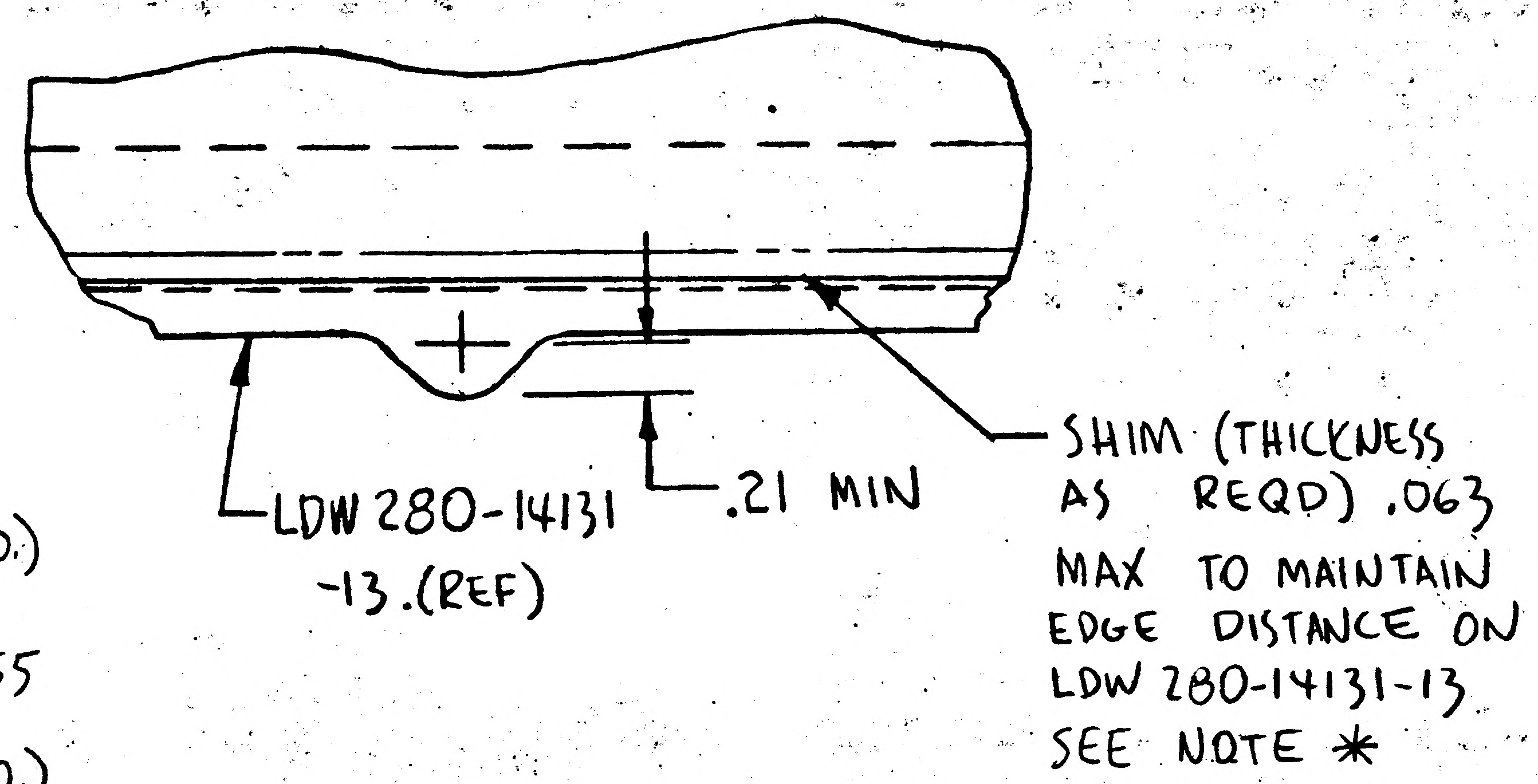
LDW 280-14131
-13.(REF)
.21 MIN
SHIM (THICKNESS
AS REQD) .063
MAX TO MAINTAIN
EDGE DISTANCE ON
LDW 280-14131-13
SEE NOTE *

ADD NOTE * (NEXT AVAIL NO.)
"SHIM (THICKNESS AS REQD)
AL ALY 2024-T3, QQ-A-355
FINISH NO. 76"
** (NEXT AVAIL NO.)
"IT IS PERMISSIBLE TO REPLACE GR500A-4 RIVETS
WITH MS20470AD4 RIVETS"

DETAIL SPEC REQ		CL II ENGRG CHG		CL I ENGRG CHG		5

REASON FOR EO: TO MAINTAIN MIN. EDGE MARGIN

DESCRIPTION OF EO: IN FLD ADDED .21 DIM, SHIM, NOTES *, ** FOR -1

GAEC EO RELEASE C: LE | | WR

MODEL	EFFECTIVITY			DRAWING CHANGE REQD		DISPOSITION OF PARTS										
	PROCURING ACTIVITY NO.	GAEC UNIT NO.	SUB CONTR UNIT NO.	✓		✓		APPROVED BY	F.DR			~	JFJ	CH	Plunkett	J. Greel
								DATE	6-1-66			~	5-4-66	5-4-66	2 Jun	5-4-66
LEM		LEM-2 (32)		REVISE DWG	RECORD EO	REWORK	SCRAP		V.D.I.	SUPPORT	RELIAB GROUP	GROUP LEADER	STRESS GROUP	LIAISON ENGRG	PROJ ENGRG	

PRIORITY	DRAWING TITLE	DRAWING NO	EO NO.
C5	RACK ASSY - A/S - AFT EQUIP BAY - Z-60.5	LDW280-52405	C-5

ISSUED BY R.F. HUBER x6452 SECTION VDI GROUP NO. ______ PL 35

01

GRUMMAN AIRCRAFT ENGINEERING CORP.
CODE IDENT NO. 26512
ENGINEERING ORDER

DWG. NO. LDW280-52405
EO NO. C6
CONTROL INFO NO. LDW280-5882

ENG 32.2 REV 3-68

DETAIL SPEC REQ	CL II ENGRG CHG	CL I ENGRG CHG

REASON FOR EO
REMOVE RIVETS IN WAY OF EQUIP LINES SUPPORT BRACKET

DESCRIPTION OF EO
ON-1 ASSY; REMOVED GR500A-4C(1),-4D(3),-4G(12),-4J(2), GR500A-5D(6),-5E(2). ADDED GR501A-4B(1), GR501A-4E(2).

GAEC EO RELEASE 4-7-66 337

MODEL	EFFECTIVITY PROCURING ACTIVITY NO.	GAEC UNIT NO.	SUB CONTR UNIT NO.
LEM		LEM-2(32)	

DRAWING CHANGE REQD REVISE DWG	RECORD EO	DISPOSITION OF PARTS REWORK	SCRAP	APPROVED BY	DATE	RELIAB. GROUP	GROUP LEADER	STRESS GROUP	LIAISON ENGRG	PROJ ENGRG	GOVT
✓		✓		F.W.R. / AAK	4-7-66	4-11		4/7		4-7	4-6-66
					V.D.I.						

PRIORITY	DRAWING TITLE	DRAWING NO.	EO NO.
C	RACK ASSY ASCENT STAGE-AFT EQUIP BAY-Z60.50	LDW280-52405	C6

ISSUED BY G KATZ 4-1-66 X7033 SECTION V D I GROUP NO 335 PI 35

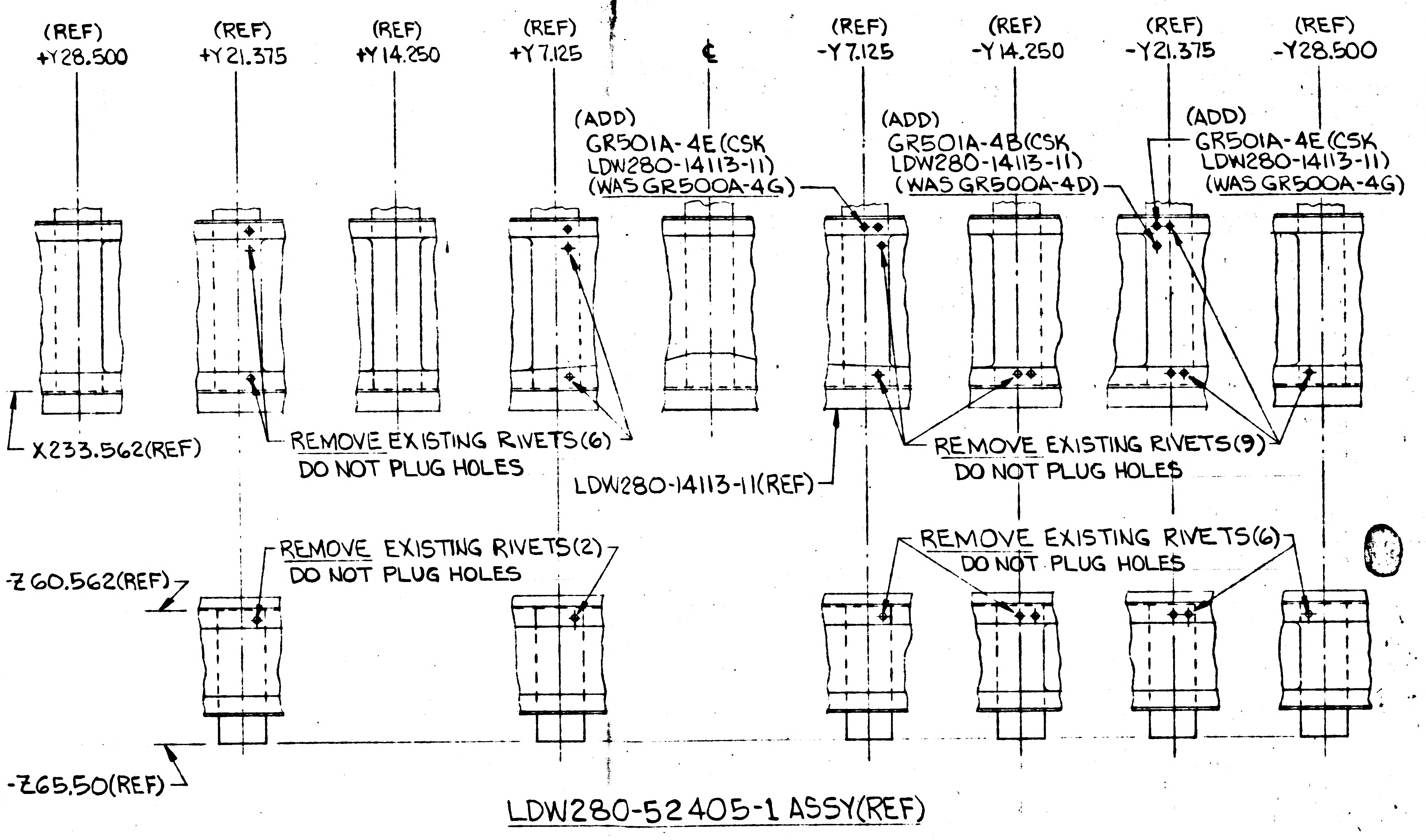
(REF) +Y28.500
(REF) +Y21.375
(REF) +Y14.250
(REF) +Y7.125
℄
(REF) -Y7.125
(REF) -Y14.250
(REF) -Y21.375
(REF) -Y28.500
(ADD) GR501A-4E(CSK LDW280-14113-11) (WAS GR500A-4G)
(ADD) GR501A-4B(CSK LDW280-14113-11) (WAS GR500A-4D)
(ADD) GR501A-4E(CSK LDW280-14113-11) (WAS GR500A-4G)
X233.562(REF)
REMOVE EXISTING RIVETS(6) DO NOT PLUG HOLES
LDW280-14113-11(REF)
REMOVE EXISTING RIVETS(9) DO NOT PLUG HOLES
-Z60.562(REF)
REMOVE EXISTING RIVETS(2) DO NOT PLUG HOLES
REMOVE EXISTING RIVETS(6) DO NOT PLUG HOLES
-Z65.50(REF)
LDW280-52405-1 ASSY(REF)

EO NUMBER WAS C-1

01

ENG 32.1 REV 3-65

GRUMMAN AIRCRAFT ENGINEERING CORP.
CODE IDENT NO. 26512
ENGINEERING ORDER

DWG. NO. LDW280-52405
EO NO. D1
CONTROL INFO NO. LDW280-6316

REMOVE LDW280-28419-1 FITTING INSTL FROM -1 RACK ASS'Y & ADD LDW280-51419-1 FITTING INSTL.

3

DETAIL SPEC REQ		CL II ENGRG CHG		CL I ENGRG CHG	

REASON FOR EO: NEW ACCELEROMETER SUPT FITTING TO BE INSTALLED.

DESCRIPTION OF EO: REMOVED LDW280-28419-1 FITTING INSTL. ADD LDW280-51419-1 FITTING INSTL.

GAEC EO RELEASE: MPIO

MODEL	EFFECTIVITY: PROCURING ACTIVITY NO.	GAEC UNIT NO.	SUB CONTR UNIT NO.
LEM		LEM-2(32)	

DRAWING CHANGE REQD: REVISE DWG ✓ RECORD EO

DISPOSITION OF PARTS: REWORK ✓ SCRAP

APPROVED BY	J.I.R.							Booth
DATE	5-4-66	5-6			5/5		5-9	5-12-66
	VDI	~~SUPPORT~~ W.T.	RELIAB. GROUP	GROUP LEADER	STRESS GROUP	LIAISON ENGRG	PROJ ENGRG	GOVT

PRIORITY: C

DRAWING TITLE: RACK ASSEMBLY A/S - AFT EQUIP BAY - Z60.500

DRAWING NO.: LDW280-52405

EO NO.: D1

ISSUED BY S. LEINOFF X7033 4-22-66 SECTION VDI GROUP NO. 335 PL 35

01

NAS 9-1100

ENG 321 REV 3-65

GRUMMAN AIRCRAFT ENGINEERING CORP.
CODE IDENT NO. 26512
ENGINEERING ORDER

DWG. NO. LDW280-52405		EO NO. D2	
CONTROL INFO NO LEM-3-2848			

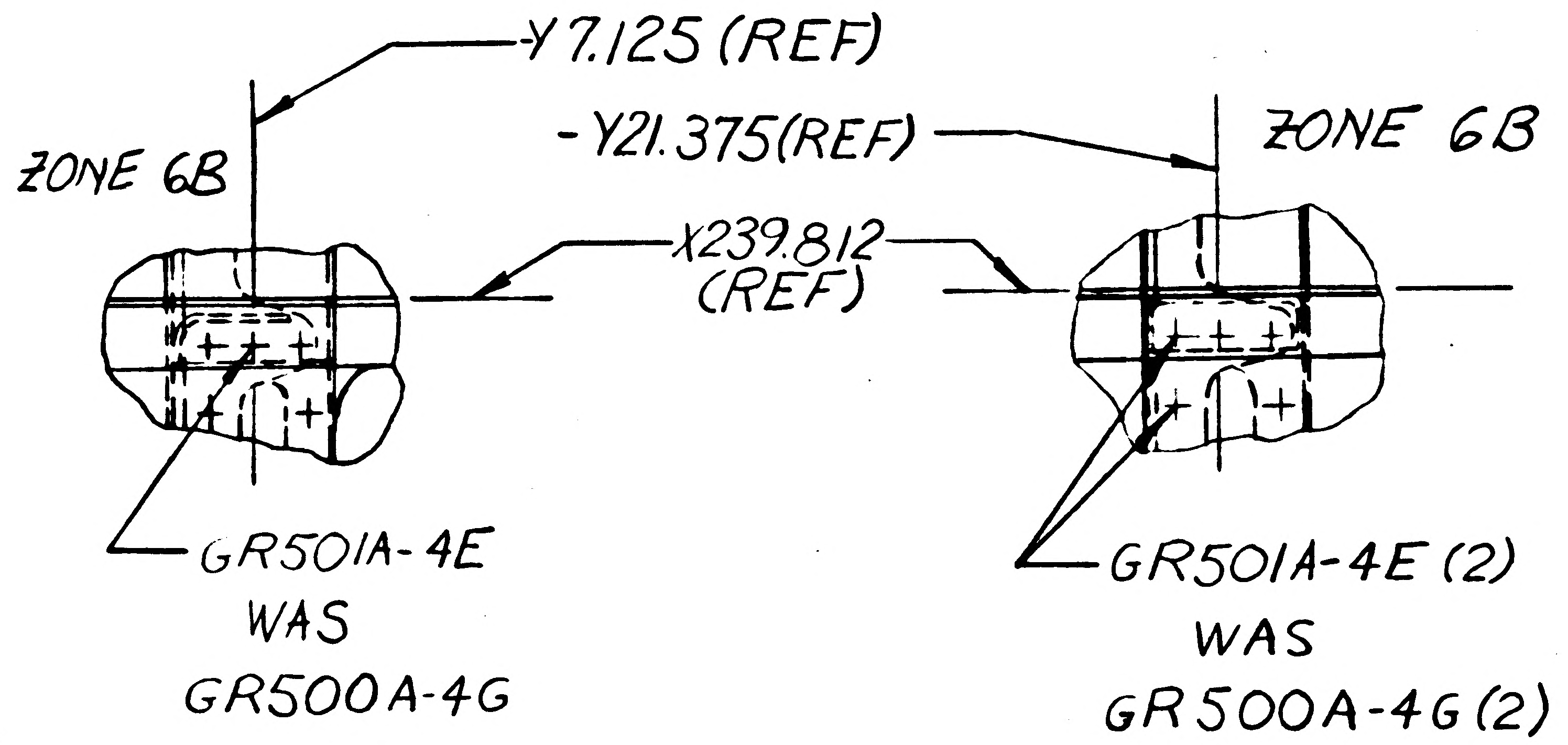

Y7.125 (REF)
-Y21.375(REF)
ZONE 6B
ZONE 6B
X239.812 (REF)
GR501A-4E
WAS
GR500A-4G
GR501A-4E (2)
WAS
GR500A-4G (2)

LDW280-52405-1 ASSY

3

DETAIL SPEC REQ		CL II ENGRG CHG		CL I ENGRG CHG	

REASON FOR EO INTERFERENCE ON ASSY WITH LDW280M14842 & M14843	IN FIELD & B/M DESCRIPTION OF EO GR501A-4E (3) WAS GR500A-4G (3)	GAEC EO RELEASE FS 6-6-6

MODEL	PROCURING ACTIVITY NO.	GAEC UNIT NO	JB CONTR UNIT NO
LEM		LEM-2(32)	

DRAWING CHANGE REQD		DISPOSITION OF PARTS		APPROVED BY	F.D.R.				BY			Bott
✓		✓		DATE	6/14/66				5-6-66	5-7-66		5-16-66
REVISE DWG	RECORD EO	REWORK	SCRAP		V.D.I.	SUPPORT	REL'AB GROUP	GROUP LEADER	STRESS GROUP	LIAISON ENGRG	PROJ ENGRG	

PRIORITY	DRAWING TITLE	DRAWING N	EO NO.
C3	RACK ASSY A/S AFT EQUIP BAY-Z605	LDW280-52405	D2

ISSUED BY SJ TARTAMELLA 5-6-66 (X2151) VB SECTION VDI DE RESPINIS GROUP NO. 335 PL 35

ENG 32.1 REV 3-65

GRUMMAN AIRCRAFT ENGINEERING CORP.

CODE IDENT NO. 26512

ENGINEERING ORDER

DWG. NO. LDW280-52405	EO NO. D4
CONTROL INFO NO. LDW280-6904	

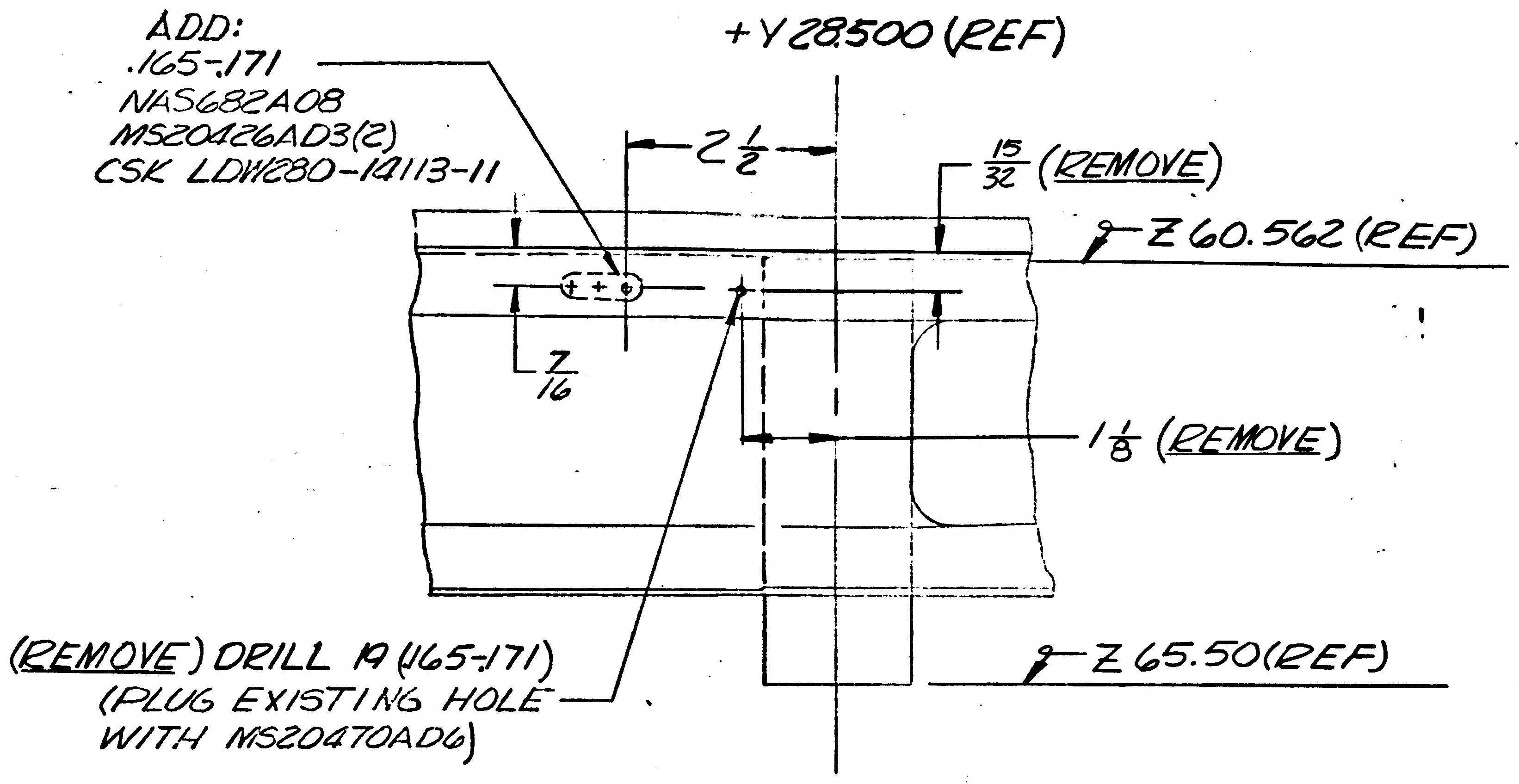

+Y 28500 (REF)
ADD:
.165-.171
NAS682A08
MS20426AD3(2)
CSK LDW280-14113-11
2 1/2
15/32 (REMOVE)
Z 60.562 (REF)
7/16
1 1/8 (REMOVE)
Z 65.50 (REF)
(REMOVE) DRILL 19 (.165-.171)
(PLUG EXISTING HOLE
WITH MS20470AD6)

DETAIL SPEC REQ		CL II ENGRG CHG		CL I ENGRG CHG		3

REASON FOR EO

CHANGE IN EQUIP LINES ROUTING.

DESCRIPTION OF EO

ON LDW280-52405-1 DELETED DRILL #19 (.165-.171). ADDED (.165-.171) HOLE, NAS682A08 & MS20 426-AD3

GAEC EO RELEASE: JR 10

MODEL	PROCURING ACTIVITY NO.	GAEC UNIT NO.	SUB CONTR UNIT NO.
LEM		LEM2 (32)	

DRAWING CHANGE REQD		DISPOSITION OF PARTS										
REVISE DWG ✓	RECORD EO	REWORK ✓	SCRAP	APPROVED BY	F.N.R.				B		Bott
				DATE	5/16/66	5-26			5/17/66		5-23-66
					VDI	~~SUPPORT~~ WTS	RELIAB. GROUP	GROUP LEADER	STRESS GROUP	LIAISON ENGRG	PROJ ENGRG	

PRIORITY	DRAWING TITLE	DRAWING NO.	EO NO.
C	RACK ASSY A/S~AFT EQUIP BAY~Z60.50	LDW280-52405	D4

ISSUED BY Lou Riedell x-1441 5-13-66 SECTION V.D.I. GROUP NO. 335 PL 35

01

NAS 9-1100

GRUMMAN AIRCRAFT ENGINEERING CORP.
CODE IDENT NO. 26512
ENGINEERING ORDER

DWG. NO. LDW280-52405
EO NO. D5
CONTROL INFO NO. LDW 280-7143

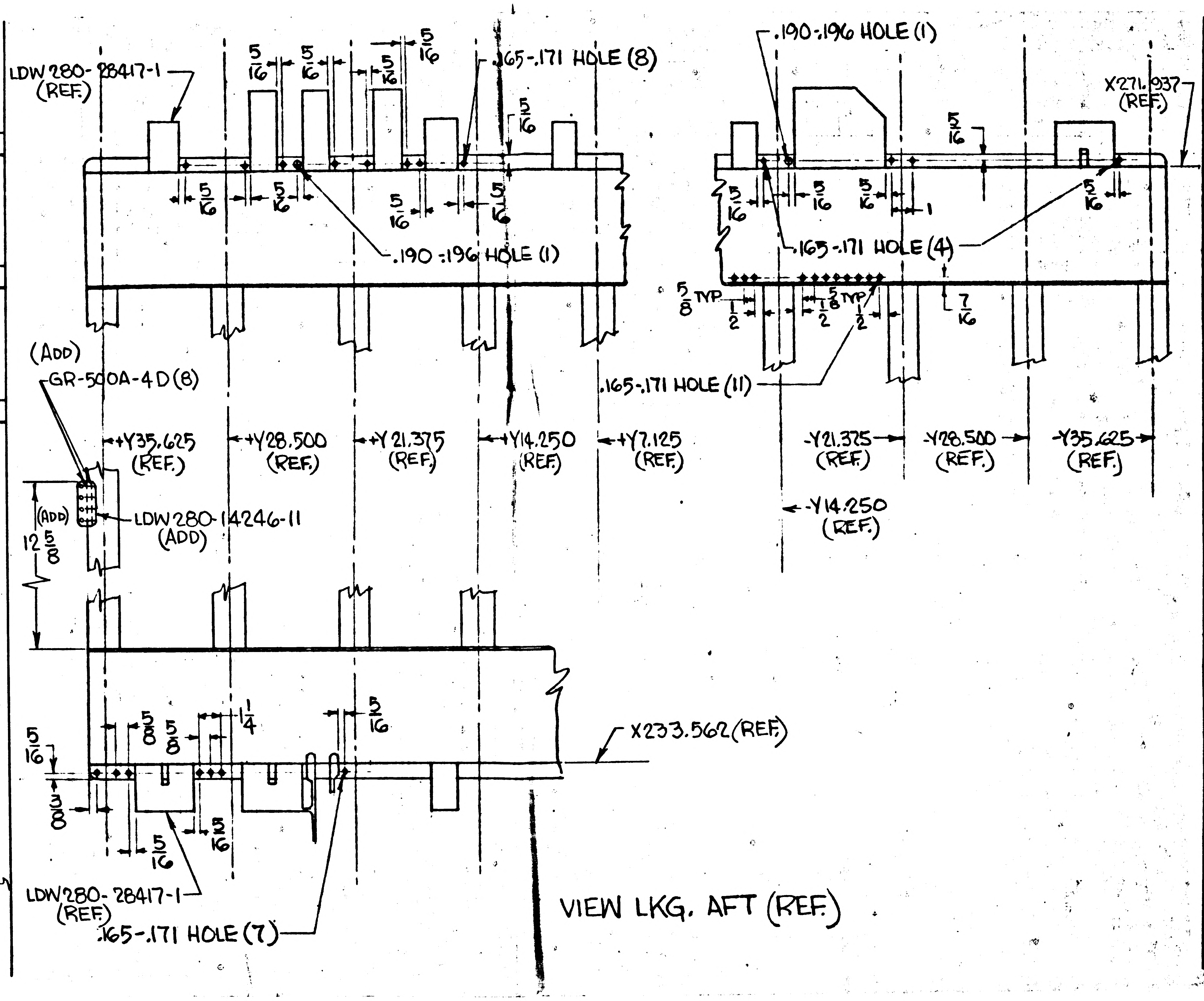

LDW280-28417-1 (REF.)
5/16
.165-.171 HOLE (8)
.190-.196 HOLE (1)
(ADD) GR-500A-4D(8)
+Y35.625 (REF.)
+Y28.500 (REF.)
+Y21.375 (REF.)
+Y14.250 (REF.)
+Y7.125 (REF.)
(ADD)
12 5/8
LDW280-14246-11 (ADD)
.190-.196 HOLE (1)
5/16
.165-.171 HOLE (4)
X271.937 (REF.)
5/8 TYP
1/2
5/8 TYP
7/16
1
.165-.171 HOLE (11)
-Y21.375 (REF.)
-Y28.500 (REF.)
-Y35.625 (REF.)
-Y14.250 (REF.)
5/8
1/4
3/8
X233.562 (REF.)
LDW280-28417-1 (REF.)
.165-.171 HOLE (7)
VIEW LKG. AFT (REF.)

DETAIL SPEC REQ	
REASON FOR EO	GROUND STUDS MOUNTING PROVISION
CL II ENGRG CHG	
CL I ENGRG CHG	
DESCRIPTION OF EO	ON-1 ADDED .165-.171 HOLE (30) & .190-.196 HOLE (2) & LDW280-14246-11(1), GR-500A-4D(8)
MODEL	LEM
EFFECTIVITY: PROCURING ACTIVITY NO.	
EFFECTIVITY: GAEC UNIT NO.	LEM-2(32)
EFFECTIVITY: SUB CONTR UNIT NO.	
DRAWING CHANGE REQD: REVISE DWG	✓
DRAWING CHANGE REQD: RECORD EO	
DISPOSITION OF PARTS: REWORK	✓
DISPOSITION OF PARTS: SCRAP	
PRIORITY	C
APPROVED BY	F.102 W.K.H.
DATE	5/26/66 6/8
	VD1.
RELIAB. GROUP	
GROUP LEADER	
STRESS GROUP	3 JV 5/26/66
LIAISON ENGRG	
PROJ. ENGRG	13 June 6-1-66
GAEC EO RELEASE	
DRAWING TITLE	RACK ASSEMBLY ASCENT STAGE - AFT EQUIP. BAY - 60.50
DRAWING NO.	LDW280-52405
EO NO.	D5

ISSUED BY W. PAUK 5-24-66 SECTION VEH. DES. INT. GROUP NO. 335 PL. 35

01

NAS 9-1100

ENG 32.1 REV 3-65

GRUMMAN AIRCRAFT ENGINEERING CORP.
CODE IDENT NO. 26512
ENGINEERING ORDER

DWG NO. LDW280-52405
EO NO. E3
CONTROL INFO NO. LDW280-9864

ADD LDW280-52436-1 & -5 BALLAST INSTALLATIONS TO F/D & B/M OF LDW280-52405-1 RACK ASSEMBLY

3

DETAIL SPEC REQ		CL II ENGRG CHG		CL I ENGRG CHG	

REASON FOR EO: TO INCORPORATE BALLAST INSTL. (VEHICLE C.G. CORRECTION)

DESCRIPTION OF EO: ADDED LDW280-52436-1 & -5 BALLAST INSTALLATION TO -1 ASSY

GAEC EO RELEASE: VE 9-2

MODEL	PROCURING ACTIVITY NO.	GAEC UNIT NO.	SUB CONTR UNIT NO.
LEM		LEM-2(32)	

DRAWING CHANGE REQD: REVISE DWG ✓ RECORD EO
DISPOSITION OF PARTS: REWORK ✓ SCRAP

	V.D.I	~~SUPPORT~~	RELIAB. GROUP	GROUP LEADER	STRESS GROUP	LIAISON ENGRG	PROJ ENGRG	~~SUPT~~
APPROVED BY	Z.N.R	AMR		~	BJW		RMC (E)	JRP
DATE	8/26/66	9-7		~	8/29		9-1	8/30/66

PRIORITY: C
DRAWING TITLE: RACK ASSY-ASCENT STAGE-AFT EQ. BAY-Z60.50
DRAWING NO.: LDW280-52405
EO NO.: E3

ISSUED BY F. BADE 8/25/66
SECTION VDI
GROUP NO. 335 PL 35

01

DWG 22.2 REV 3-60

GRUMMAN AIRCRAFT ENGINEERING CORP.
CODE IDENT NO. 26512
ENGINEERING ORDER

DWG NO.	LDW280-52405	EO NO.	E4
CONTROL INFO NO.	LDW 280-9850		

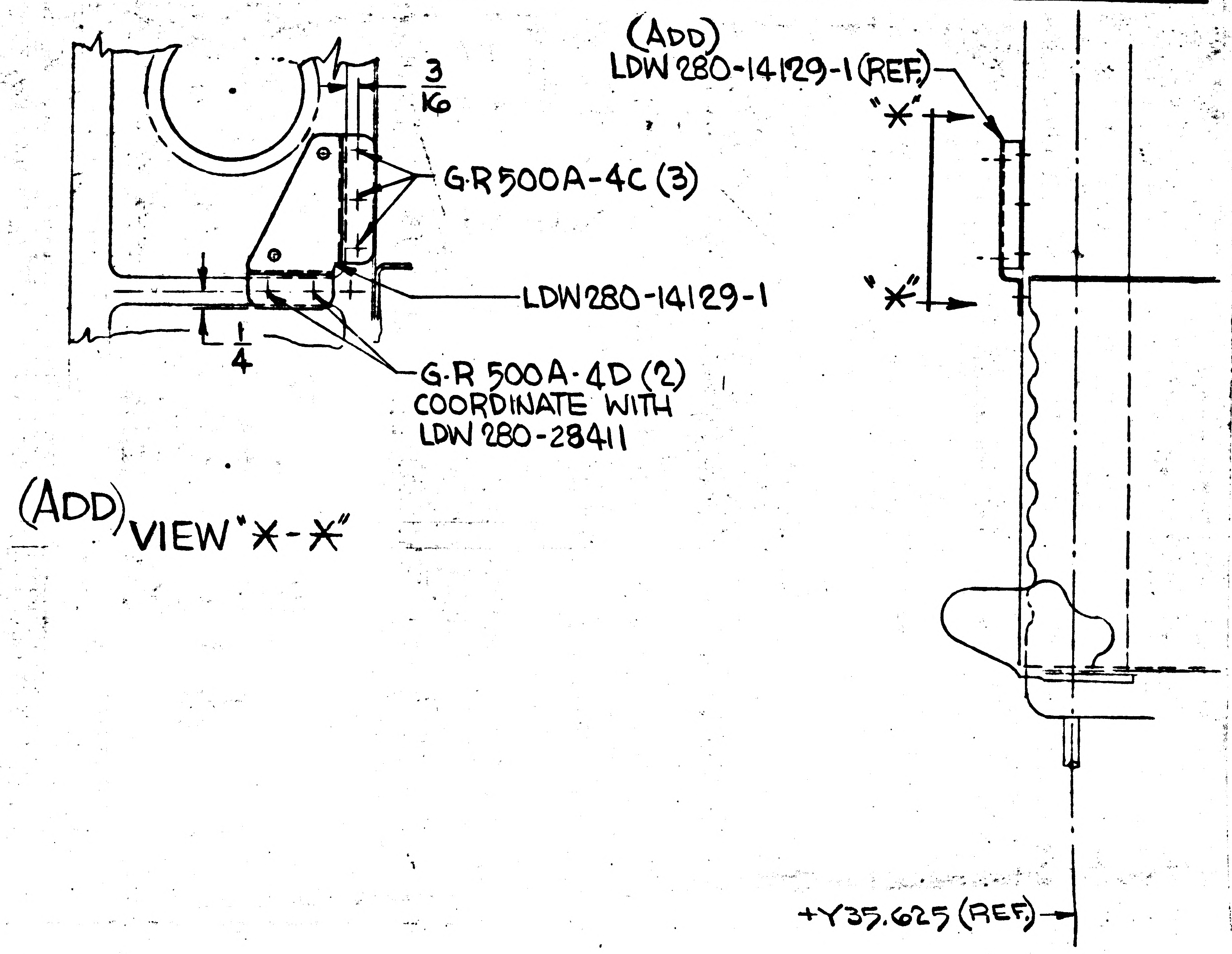

(ADD)
LDW 280-14129-1 (REF)
"*"
"*"
3/16
G-R500A-4C (3)
LDW280-14129-1
1/4
G-R 500A-4D (2)
COORDINATE WITH
LDW 280-28411
(ADD) VIEW "*-*"
+Y35.625 (REF)

ZONE
8B

NOTE: * * USE NEXT
AVAILABLE LETTER

DETAIL SPEC REQ		CL III ENGRG CHG		CL I ENGRG CHG	

REASON FOR EO: MOUNTING PROVISION FOR THERMO-COUPLE ZONE BOX

DESCRIPTION OF EO: ON -1, ADDED LDW280-14129-1 & LOCATING DIMS. ADDED G-R500A-4C (3), G-R500A-4D(2). ADDED VIEW "*-*"

GAEC EO RELEASE: LE 9-6

MODEL	PROCURING ACTIVITY NO.	GAEC UNIT NO.	SUB CONTR UNIT NO.
LEM		LEM-2 (32)	

DRAWING CHANGE REQD		DISPOSITION OF PARTS	
REVISE DWG ✓	RECORD EO	REWORK ✓	SCRAP

APPROVED BY	F.D.R.	sam		—	B.H.		RMC (E)	J.R.F.
DATE	8/26/66	7-15		—	8/29		9-3	9/1/66
	V.D.I.	~~SUPPORT~~ VD	RELIAB. GROUP	GROUP LEADER	STRESS GROUP	LIAISON ENGRG	PROJ ENGRG	~~GOVT~~

PRIORITY: C

DRAWING TITLE: RACK ASSEMBLY ASCENT STAGE - AFT EQUIP. BAY - Z60.5

DRAWING NO.: LDW280-52405

EO NO.: E4

ISSUED BY W. PAIUK 8-24-66 SECTION VEH. DES. INT. GROUP NO. 335 PL 35

NAS 9-1100

ENG 32.1 REV 3-66

*

GRUMMAN AIRCRAFT ENGINEERING CORP.
CODE IDENT NO. 26512
ENGINEERING ORDER

DWG. NO. LDW280-52405		EO NO. E5
CONTROL INFO NO. LDW280A-0778		

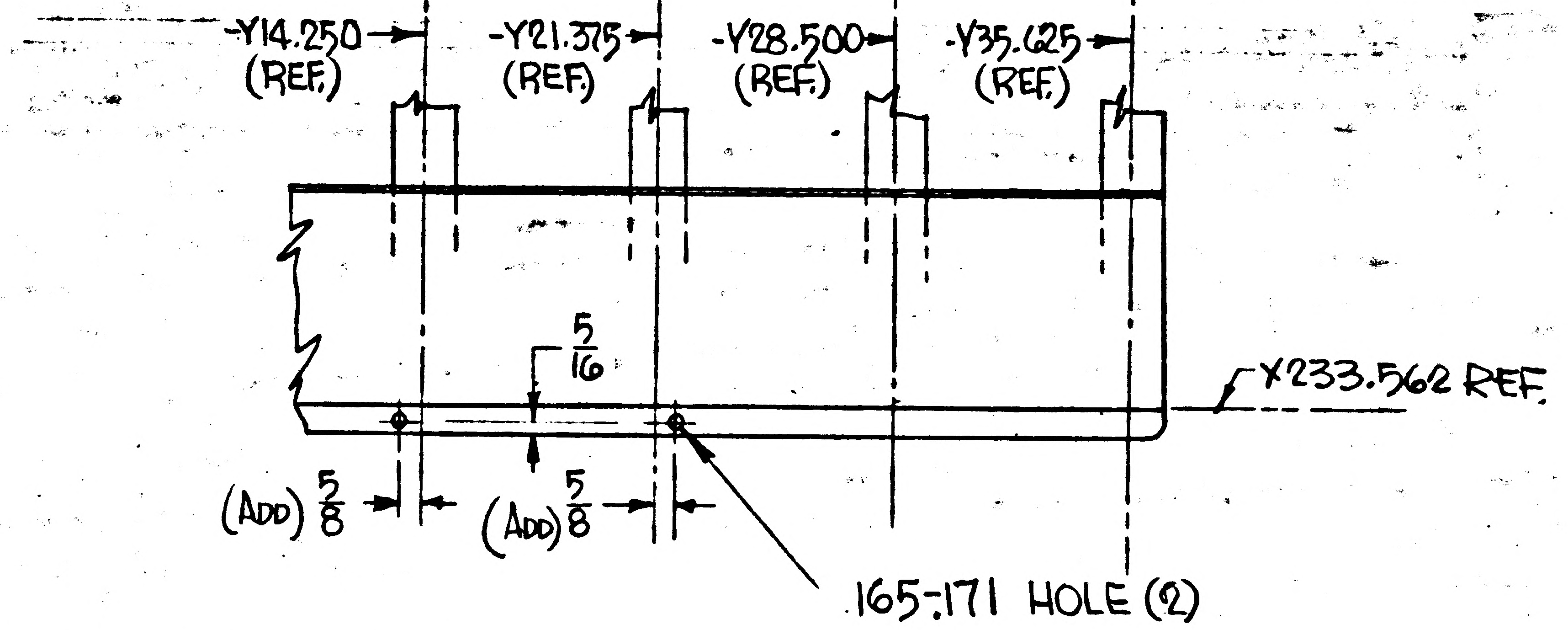

VIEW LKG. AFT (REF.)

3

DETAIL SPEC REQ		CL II ENGRG CHG		CL I ENGRG CHG	

REASON FOR EO	DESCRIPTION OF EO	GAEC C EO RELEASE
GROUND STUDS MOUNTING PROVISION	ON -1, ADDED .165-.171 HOLE (2)	② FR 9/28/66

MODEL	EFFECTIVITY			DRAWING CHANGE REQD		DISPOSITION OF PARTS										
	PROCURING ACTIVITY NO.	GAEC UNIT NO	SUB CONTR UNIT NO.					APPROVED BY	F.D.K.				B.H.		RMC Ⓔ	
								DATE	9/28/66	10-3			9/27		9-28	9/28/66
LM		LM-2(32)		✓ REVISE DWG	RECORD EO	✓ REWORK	SCRAP		V.D.I.	~~SUPPORT~~ WTJ	RELIAB. GROUP	GROUP LEADER	STRESS GROUP	LIAISON ENGRG	PROJ ENGRG	

PRIORITY	DRAWING TITLE	DRAWING NO.	EO NO.
C	RACK ASSEMBLY ASCENT STAGE~AFT EQUIP. BAY~-Z60.50	LDW280-52405	E5

ISSUED BY W. PAIUK 9-28-66 SECTION VEH. DES. INT. GROUP NO. 335 PL. 35

01

ENG 32.1 REV 3-65

GRUMMAN AIRCRAFT ENGINEERING CORP.
CODE IDENT NO. 26512
ENGINEERING ORDER

DWG. NO. LDW 280-52405
EO NO. E6
CONTROL INFO NO. LM-5- 9436

IN F/D & B/M :

REMOVE LDW280-14138-5 & ASSOCIATED DRILL #28 (.139-.145), NAS1131-V2 (4), AN960-D4(4) & MS21042L06(4)

NOT NECESSARY TO PLUG EXTRANEOUS HOLES

DETAIL SPEC REQ		CL II ENGRG CHG		CL I ENGRG CHG		5

REASON FOR EO: PART INTERFERS WITH STRUCTURE

DESCRIPTION OF EO: IN F/D & B/M: REMOVED LDW280-14138-5, DRILL #28(.139-.145), NAS1131-V2 (2), AN960-D4(4) & MS21042L06(4)

GAEC C EO RELEASE: E

MODEL	EFFECTIVITY: PROCURING ACTIVITY NO.	GAEC UNIT NO.	SUB CONTR UNIT NO.
LM ✓		LM-2 (32)	

DRAWING CHANGE REQD: REVISE DWG ✓ | RECORD EO
DISPOSITION OF PARTS: REWORK ✓ | SCRAP

APPROVED BY	WT			~	N	CH	PMC	
DATE	10/20/66			~	10/20	10-21	10-24-66	10-22-66
10-19-66	VDI	SUPPORT	RELIAB. GROUP	GROUP LEADER	STRESS GROUP	LIAISON ENGRG	PROJ ENGRG	~~GOVT~~

PRIORITY	DRAWING TITLE	DRAWING NO.	EO NO.
C	A/S ~ RACK ASSY- AEB ~ -Z60.5	LDW280-52405	E6

ISSUED BY HARRIFAN/TRAUT X6454 SECTION VDI GROUP NO. 335 PL 5

01

NAS 9-1100

ENG 32.1 REV 3-65

GRUMMAN AIRCRAFT ENGINEERING CORP.
CODE IDENT NO. 26512
ENGINEERING ORDER

DWG. NO. LDW280-52405
EO NO. E8
CONTROL INFO NO. LM-5-11346

FOR -1

LDW280M14042-7 & -8

WAS

LDW280M14042-5 & -6

(NO PICTURE CHG. REQD.)

RELEASED BY LIAISON

6

DETAIL SPEC REQ		CL II ENGRG CHG		CL I ENGRG CHG	

REASON FOR EO: UPDATE DWG REQ'TS

DESCRIPTION OF EO: FOR -1 ADDED LDW280M14042-7 & 8 WAS LDW280M14042-5 & -6

GAEC EO RELEASE: C ✓ VE

MODEL	PROCURING ACTIVITY NO.	GAEC UNIT NO.	SUB CONTR UNIT NO.
LM		LM-2(32)	

DRAWING CHANGE REQD: REVISE DWG ✓ RECORD EO

DISPOSITION OF PARTS: REWORK ✓ SCRAP

APPROVED BY	WT			~	NM		RMC(W)	
DATE	12/10/66			~	12-10-66	12-11	12-15-66	12-11-66
#6	VDI	SUPPORT	RELIAB. GROUP	GROUP LEADER	STRESS GROUP	LIAISON ENGRG	PROJ ENGRG	~~GOVT~~

PRIORITY: C

DRAWING TITLE: RACK ASSY A/S AFT EQUIP BAY -Z60.5

DRAWING NO.: LDW280-52405

EO NO.: E8

ISSUED BY M. SHAPIRO X6456 SECTION VD1 GROUP NO. 335 PL 5

01 NAS 9-1100

ENG 32.1 REV 3-65

GRUMMAN AIRCRAFT ENGINEERING CORP.
CODE IDENT NO. 26512
ENGINEERING ORDER

DWG. NO. LDW280-52405		EO NO. E1	
CONTROL INFO NO. LDW280 - 7500			

FOR -1 ASSY.
IN FIELD & BM LDW280-51434-1,-2 REPLACES
LDW280-28434-1,-2.

DETAIL SPEC REQ-		CL II ENGRG CHG		CL I ENGRG CHG		5

REASON FOR EO	DESCRIPTION OF EO	GAEC EO RELEASE
REDESIGN OF FITTING	FOR -1 ASSY. IN FIELD & BM LDW280-51434-1, & -2 REPLACES LDW280-28434-1, -2	Ⓡ C BJ 6-15

MODEL	EFFECTIVITY		
	PROCURING ACTIVITY NO.	GAEC UNIT NO.	SUB CONTR UNIT NO.
LEM		LEM-2(32)	

DRAWING CHANGE REQD		DISPOSITION OF PARTS		APPROVED BY	7.N.R				B N			AC
✓		✓		DATE	6-9-66				6/11		16 June	6-14-66
REVISE DWG	RECORD EO	REWORK	SCRAP		V.D.I	SUPPORT	RELIAB GROUP	GROUP LEADER	STRESS GROUP	LIAISON ENGRG	PROJ ENGRG	~~[illegible]~~

PRIORITY	DRAWING TITLE	DRAWING NO	EO NO.
C	RACK ASSY A/S ~ AFT EQUIP BAY	LDW280-52405	E1

ISSUED BY Lou Riedell 6-6-66 x-1441 SECTION VDI GROUP NO. 335 PL 35

01

NAS 9-1100

ENG 32.1 REV 3-65

GRUMMAN AIRCRAFT ENGINEERING CORP.
CODE IDENT NO. 26512
ENGINEERING ORDER

DWG. NO. LDW280-52405		EO NO. F1
CONTROL INFO NO. LDW 280A-4658		

ON-1;

IN FIELD & B/M REMOVE LDW280-28455-1 FITTING INSTL. (1)
& ADD LDW280-51455-1 FITTING INSTL. (1)

3

DETAIL SPEC REQ		CL II ENGRG CHG		CL I ENGRG CHG	

REASON FOR EO	DESCRIPTION OF EO	GAEC C EO RELEASE
TO AGREE WITH UPDATE DETAIL PART.	ON-1, REMOVE LDW280-28455-1 FITTING INSTL. (1) ADD LDW280-51455-1 FITTING INSTL. (1).	ⓔ KE 1/9/7

MODEL	EFFECTIVITY		
	PROCURING ACTIVITY NO.	GAEC UNIT NO.	SUB CONTR UNIT NO.
LM		LM-2 (32)	

DRAWING CHANGE REQD		DISPOSITION OF PARTS										
✓		✓		APPROVED BY	7.DR			~	B JV			
				DATE	1-4-67			~	1/5		1-7-67	1-9-67
REVISE DWG	RECORD EO	REWORK	SCRAP	6	V.D.I.	SUPPORT	RELIAB. GROUP	GROUP LEADER	STRESS GROUP	LIAISON ENGRG	PROJ ENGRG	~~GOVT~~

PRIORITY	DRAWING TITLE	DRAWING NO.	EO NO.
C	RACK ASSEMBLY ASCENT STAGE ~ AFT EQUIP. BAY ~ -Z60.500	LDW280-52405	F1

ISSUED BY W. PAIUK 1-3-67 SECTION VEH. DES. INT. GROUP NO. 335 PL 35

01

NAS 9-1100

01 NAS 9-1100

B

ENG 22.3 REV 3-65

GRUMMAN AIRCRAFT ENGINEERING CORP.
CODE IDENT NO. 26512
ENGINEERING ORDER

DWG. NO. LDW 280-52405		EO NO. F2	
CONTROL INFO NO. LDW 28CA-6181			

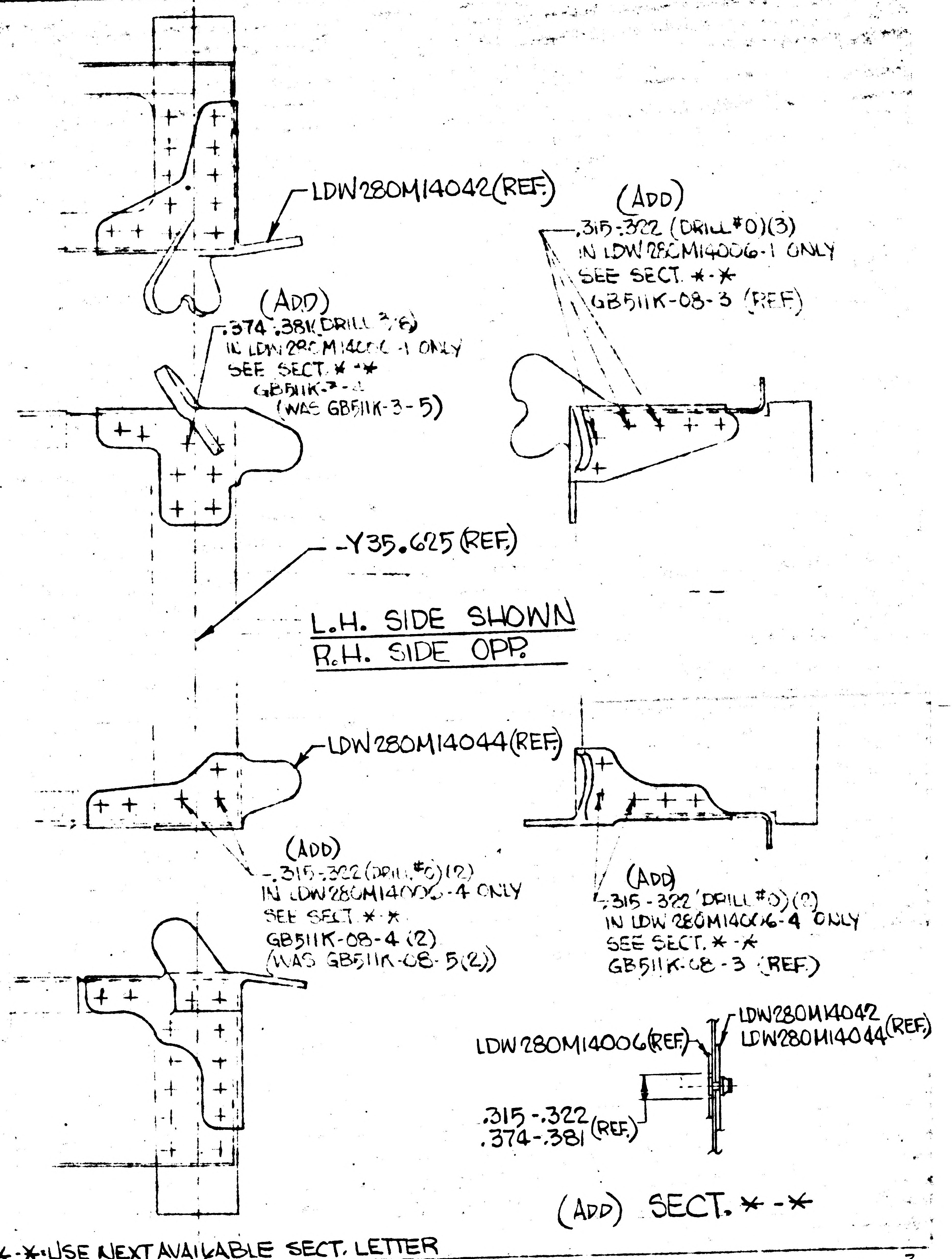
LDW280M14042(REF.)
(ADD)
.374-.381(DRILL 3/8)
IN LDW28CM14006-1 ONLY
SEE SECT. *-*
GB511K-3-4
(WAS GB511K-3-5)
(ADD)
.315-.322 (DRILL #0)(3)
IN LDW28CM14006-1 ONLY
SEE SECT. *-*
GB511K-08-3 (REF.)
-Y35.625 (REF.)
L.H. SIDE SHOWN
R.H. SIDE OPP.
LDW280M14044(REF.)
(ADD)
.315-.322 (DRILL #0)(2)
IN LDW280M14006-4 ONLY
SEE SECT. *-*
GB511K-08-4 (2)
(WAS GB511K-08-5(2))
(ADD)
.315-.322 (DRILL #0)(2)
IN LDW 280M14006-4 ONLY
SEE SECT. *-*
GB511K-08-3 (REF.)
LDW280M14006(REF.)
LDW280M14042
LDW280M14044 (REF.)
.315-.322
.374-.381 (REF.)
(ADD) SECT. *-*

NOTE: *-*: USE NEXT AVAILABLE SECT. LETTER

DETAIL SPEC REQ	CL II ENGRG CHG	✓	CL I ENGRG CHG	LCD 19-667

TO PREVENT CRACKS ON INTERNAL PARTS

ON-
ADDED HOLES, .374-.381 (DRILL 3/8)(2) & .315-.322 (DRILL #0)(14), ADDED GB511K-3-4(2), GB511K-08-4(4), REMOVED GB511K-08-5(4), GB511K-3-5(2). ADDED SECT. *-*.

3

GAEC C EO RELEASE: JK 4/10/7

MODEL	EFFECTIVITY PROCURING ACTIVITY NO	GAEC UNIT NO	SUB CONTR UNIT NO	DRAWING CHANGE REQD	DISPOSITION OF PARTS	APPROVED BY
LM		LM-2 (32)		REVISE DWG ✓ / RECORD EO	REWORK ✓ / SCRAP	DATE 4/4/67

1	VDI	SUPPORT	RELIAB GROUP	GROUP LEADER 4-4-67	STRESS GROUP 4/4/67	PROJ ENGR 4/7/67

PRIORITY C

RACK ASSY.
ASCENT STAGE ~ AFT EQUIP. BAY ~ Z60.50

DRAWING NO LDW 280-52405 EO NO F2

ISSUED BY W. PALUK SECTION VEH. DES. INT. GROUP NO 335 PL 25

ENG 32.1 REV 3-65

GRUMMAN AIRCRAFT ENGINEERING CORP.
CODE IDENT NO. 26512
ENGINEERING ORDER

DWG. NO.	LDW280-52405	EO NO.	F3
CONTROL INFO NO.	LDW280A7772		

ON-1 ASSY SH 3, ZONE 8C

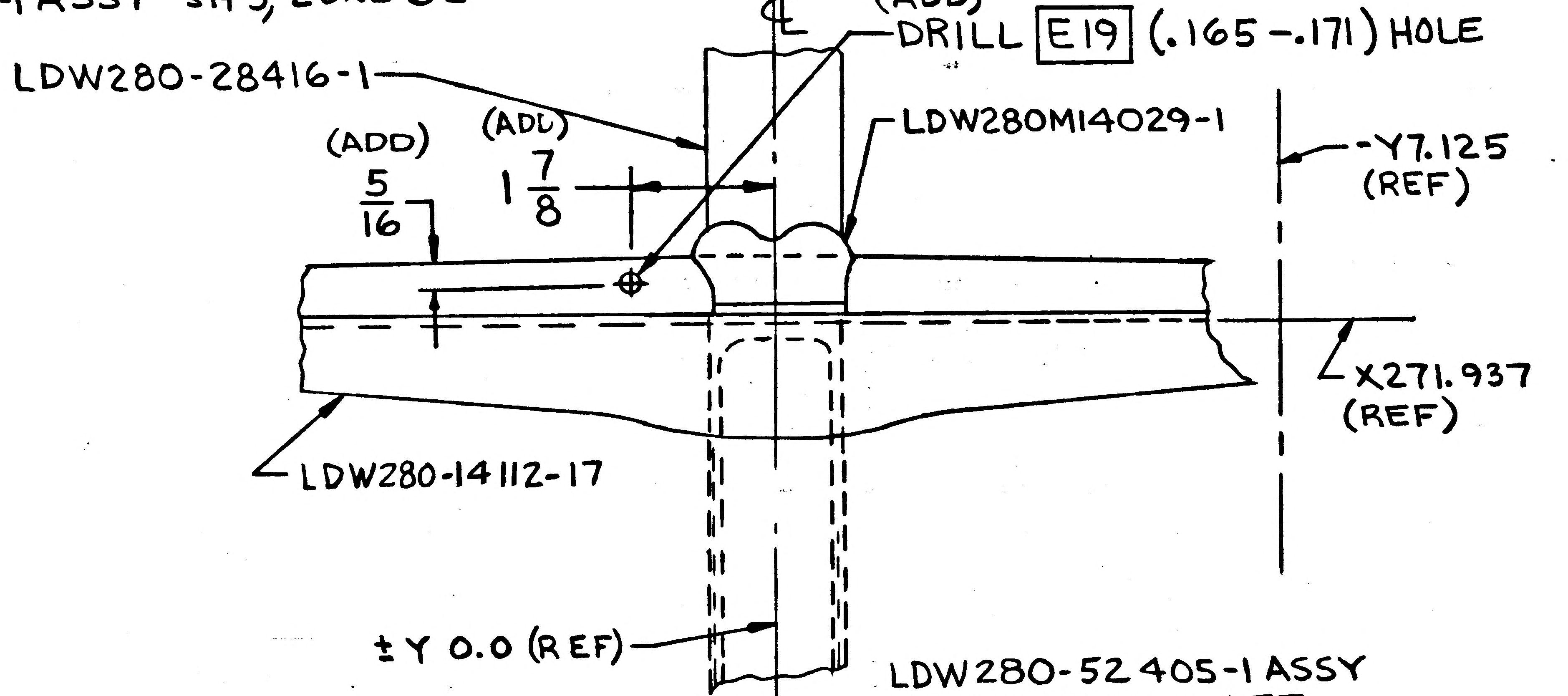
(ADD)
DRILL E19 (.165-.171) HOLE
LDW280-28416-1
LDW280M14029-1
-Y7.125 (REF)
(ADD) 5/16
(ADD) 1 7/8
X271.937 (REF)
LDW280-14112-17
±Y 0.0 (REF)

LDW280-52405-1 ASSY
VIEW LOOKING AFT

DETAIL SPEC REQ	☐	CL II ENGRG CHG	☒	CL I ENGRG CHG	☐	LCD1694

REASON FOR EO: PROVIDE HOLE FOR GROUND STUD

DESCRIPTION OF EO: ON-1 ADDED E19 (.165-.171) HOLE, 5/16, 1 7/8 DIMS.

GAEC EO RELEASE: 5 JL 7-5

MODEL	PROCURING ACTIVITY NO.	GAEC UNIT NO.	SUB CONTR UNIT NO.
LM		LM-2 (32)	

DRAWING CHANGE REQD: REVISE DWG ✓ RECORD EO

DISPOSITION OF PARTS: REWORK ✓ SCRAP

APPROVED BY								
	JAP			JW	CB		JMS	
DATE	7/1/67			7/1/67	7/3		7/5/67	7/5/67
	VDI	SUPPORT	RELIAB. GROUP	GROUP LEADER	STRESS GROUP	LIAISON ENGRG	PROJ ENGRG	~~EDM~~

PRIORITY	DRAWING TITLE	DRAWING NO.	EO NO.
C	RACK ASSY ASCENT STAGE-AFT EQUIP BAY -Z60.5	LDW280-52405	F3

ISSUED BY R.EBERLE X1153 6-28-67 SECTION VDI (EQUIP LINES) GROUP NO. 332 PL 25

01
NAS 9-1100

GRUMMAN AIRCRAFT ENGINEERING CORP.
CODE IDENT NO. 26512
ENGINEERING ORDER *

DWG. NO. LDW280-52405
CONTROL INFO NO. LDW280A9111
EO NO. F4

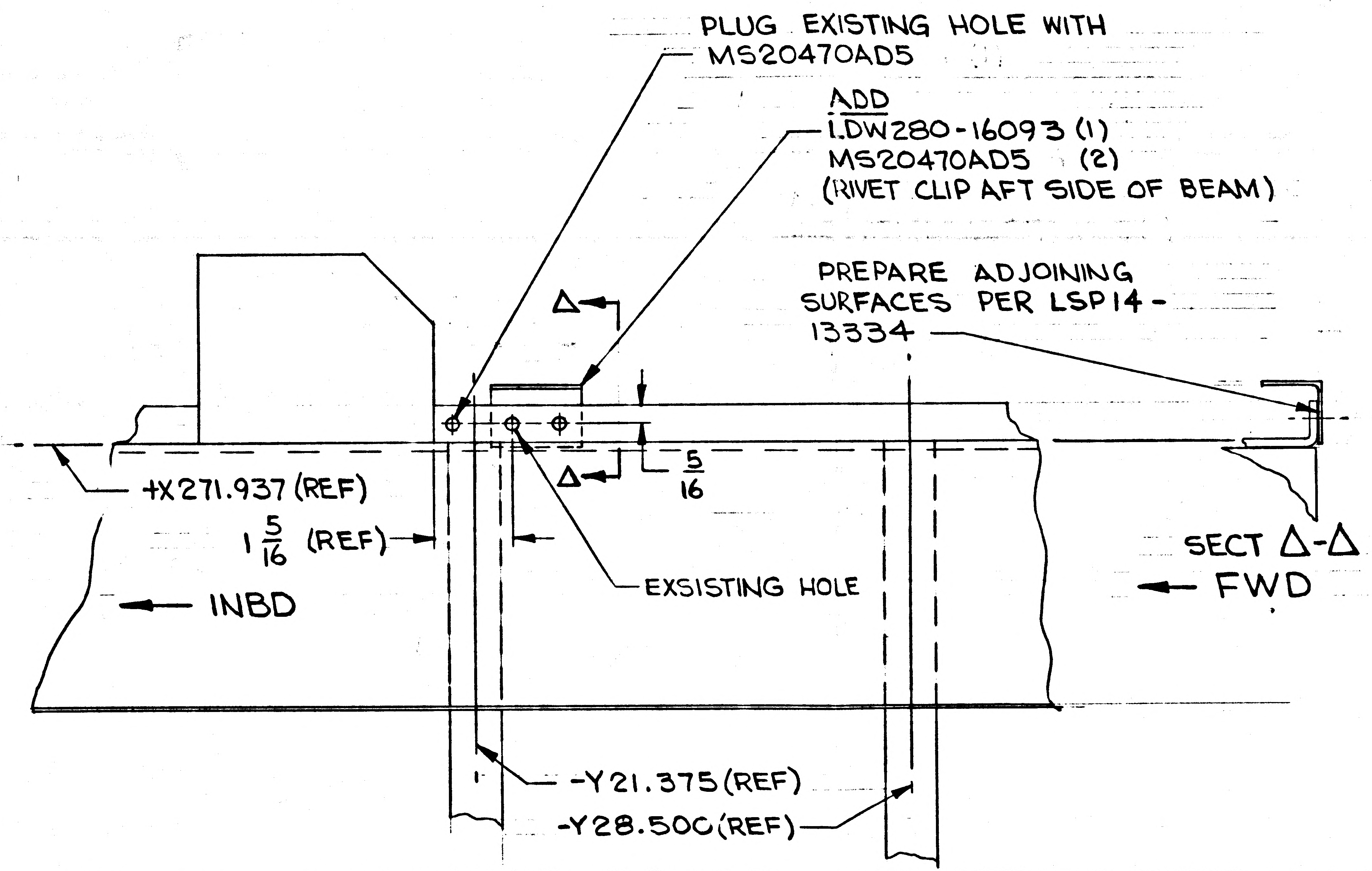
PLUG EXISTING HOLE WITH MS20470AD5
ADD
LDW280-16093 (1)
MS20470AD5 (2)
(RIVET CLIP AFT SIDE OF BEAM)
PREPARE ADJOINING SURFACES PER LSP14-13334
Δ
Δ
5/16
+X271.937 (REF)
1 5/16 (REF)
EXSISTING HOLE
INBD
SECT Δ-Δ
FWD
-Y21.375 (REF)
-Y28.500 (REF)

LDW280-52405 -1 INSTL
VIEW LOOKING AFT
SH 3.00 (ZONE 7C)

ENG 32.2 REV 3-65

DETAIL SPEC REQ	CL II ENGRG CHG	CL I ENGRG CHG
☐	☐	☑

LCD 1978 OK

REASON FOR EO: TO PROVIDE SUPPORTING STRUCTURE FOR RCCA, WIRE GROUNDING TERMINAL

DESCRIPTION OF EO: ON -1 INSTL ADD LDW280-16093 (CLIP)(1) MS20470AD5 (3) RIVETS

Ⓡ GAEC EO RELEASE JK 9/11/67

EFFECTIVITY			DRAWING CHANGE REQD		DISPOSITION OF PARTS		APPROVED BY						
MODEL	PROCURING ACTIVITY NO.	GAEC UNIT NO.	SUB CONTR UNIT NO.	REVISE DWG	RECORD EO	REWORK	SCRAP	DATE	SUPPORT	RELIAB. GROUP	GROUP LEADER	STRESS GROUP	LIAISON ENGRG	PROJ ENGRG
LM		LM-2 (32)		✓		✓		9/11/67 VDI			9/11/67	JV 9/11/67		9/11/67 9-11-67

PRIORITY: C

DRAWING TITLE: RACK ASSEMBLY ASCENT STAGE AFT EQUIP BAY -Z60.5

DRAWING NO.: LDW280-52405

EO NO.: F4

9/12 ISSUED BY DAN CAROLEO, EX:1153 SECTION EQUIP. LINES/VDI GROUP NO. 332 PL 25

01

NAS 9-1100

RELEASED BY LIAISON

ENG 32.1 REV

GRUMMAN AIRCRAFT ENGINEERING CORP.
CODE IDENT NO. 26512
ENGINEERING ORDER

DWG. NO. LDW280-52405	EO NO. F5
CONTROL INFO NO. LM-5-13630	

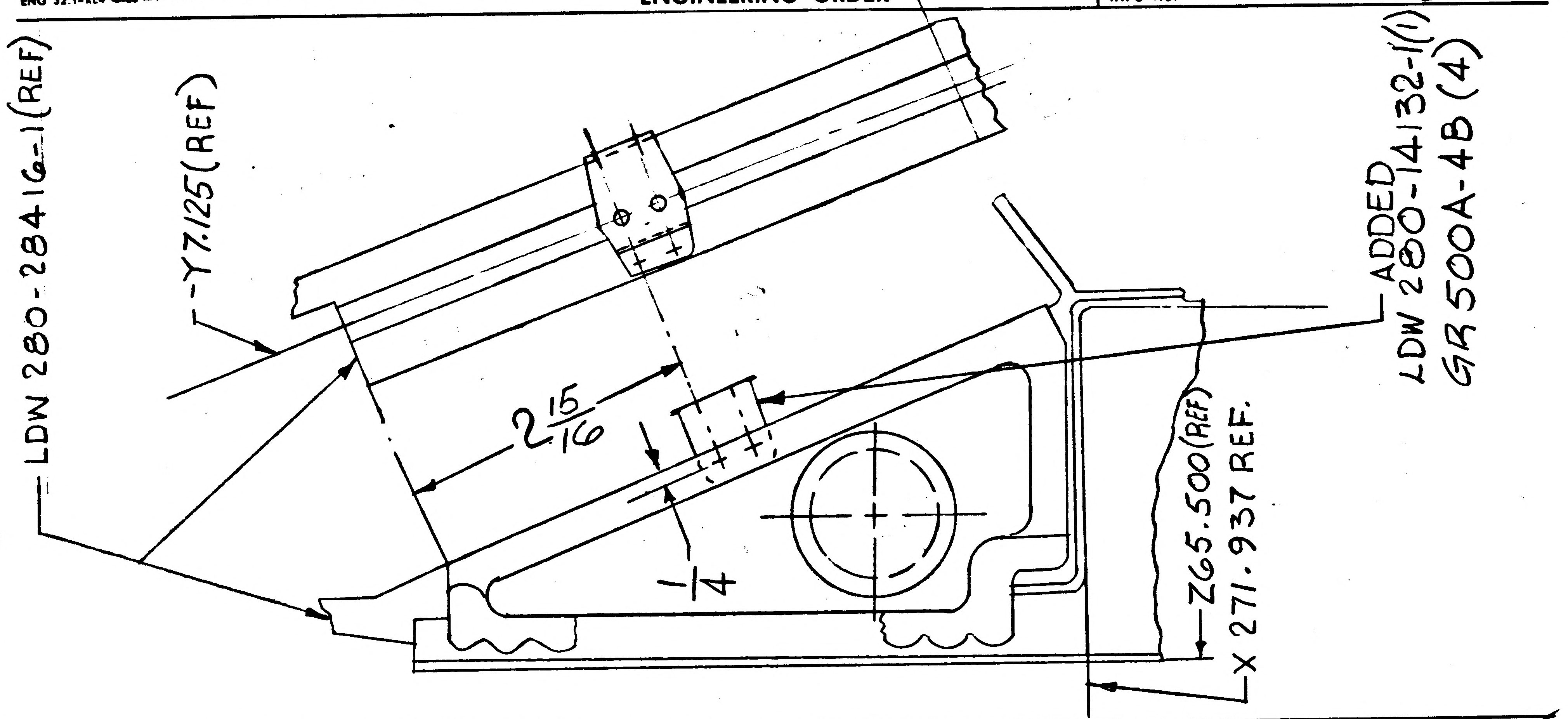

LDW 280-28416-1 (REF)
Y7.125 (REF)
$2\frac{15}{16}$
-1/4
ADDED LDW 280-14132-1(1)
GR 500A-4B (4)
Z65.500 (REF)
X 271.937 REF.

DETAIL SPEC REQ		CL II ENGRG CHG	✓	CL I ENGRG CHG		5

REASON FOR EO	DESCRIPTION OF EO	GAEC EO RELEASE
ADDED SUPPORT FOR ECC LINES	ADDED LDW 280-14132-1(1) ADDED GR500A-4B (4)	JK

MODEL	EFFECTIVITY: PROCURING ACTIVITY NO.	EFFECTIVITY: GAEC UNIT NO.	EFFECTIVITY: SUB CONTR UNIT NO.
LM		LM2 (32)	

DRAWING CHANGE REQD: REVISE DWG	DRAWING CHANGE REQD: RECORD EO	DISPOSITION OF PARTS: REWORK	DISPOSITION OF PARTS: SCRAP
✓		✓	

	VDI	SUPPORT	RELIAB. GROUP	GROUP LEADER	STRESS GROUP	LIAISON ENGRG	PROJ ENGRG	
APPROVED BY	Jay			—	JFJ	CH	WB	
DATE	9/28/67			—	9-25-67	9/25/67	9/28/67	9/28/67

PRIORITY	DRAWING TITLE	DRAWING NO.	EO NO.
C	RACK ASSEMBLY ASCENT STAGE - AFT EQUIPT BAY	LDW280-52405	F5

ISSUED BY LIAISON E. ROSADO/EP SECTION V.D.I. GROUP NO. 332 PL 5

01 NAS 9-1100

ENG 32.1 REV 3-65

GRUMMAN AIRCRAFT ENGINEERING CORP.
CODE IDENT NO. 26512
ENGINEERING ORDER

DWG. NO. LDW 280-52405
EO NO. F7
CONTROL INFO NO. LM5-13642

2 WAS $2\frac{15}{16}$

PLUG EXISTING HOLES WITH
GR500A-4B(4)

REF EO F5

RELEASED BY LIAISON

DETAIL SPEC REQ	☐	CL II ENGRG CHG	☑	CL I ENGRG CHG	☐

REASON FOR EO: TO CORRECT ECS LINE SUPPORT

DESCRIPTION OF EO: ON-1 2 WAS $2\frac{15}{16}$

GAEC EO RELEASE: VK

MODEL	PROCURING ACTIVITY NO.	GAEC UNIT NO.	SUB CONTR UNIT NO.
LM		LM2(32)	

DRAWING CHANGE REQD: REVISE DWG ✓ RECORD EO
DISPOSITION OF PARTS: REWORK ✓ SCRAP

APPROVED BY				—		CH		
DATE	10/27/67			—	10-14-67	10/13/67	10/21/67	10/14/67
VDI	VDI	SUPPORT	RELIAB. GROUP	GROUP LEADER	STRESS GROUP	LIAISON ENGRG	PROJ ENGRG	

PRIORITY	DRAWING TITLE	DRAWING NO.	EO NO.
C	RACK ASSY ASCENT STAGE-AFT EQUIPT BAY	LDW280-52405	F7

ISSUED BY ROSADO X86454 SECTION EQUIP LINES GROUP NO. 332 PL 5

01

NAS 9-1100

B

ENG 32.1 REV 3-65

GRUMMAN AIRCRAFT ENGINEERING CORP.
CODE IDENT NO. 26512
ENGINEERING ORDER

DWG NO. LDW280-52405		EO NO. F8	
CONTROL INFO NO. LDW280B0362			

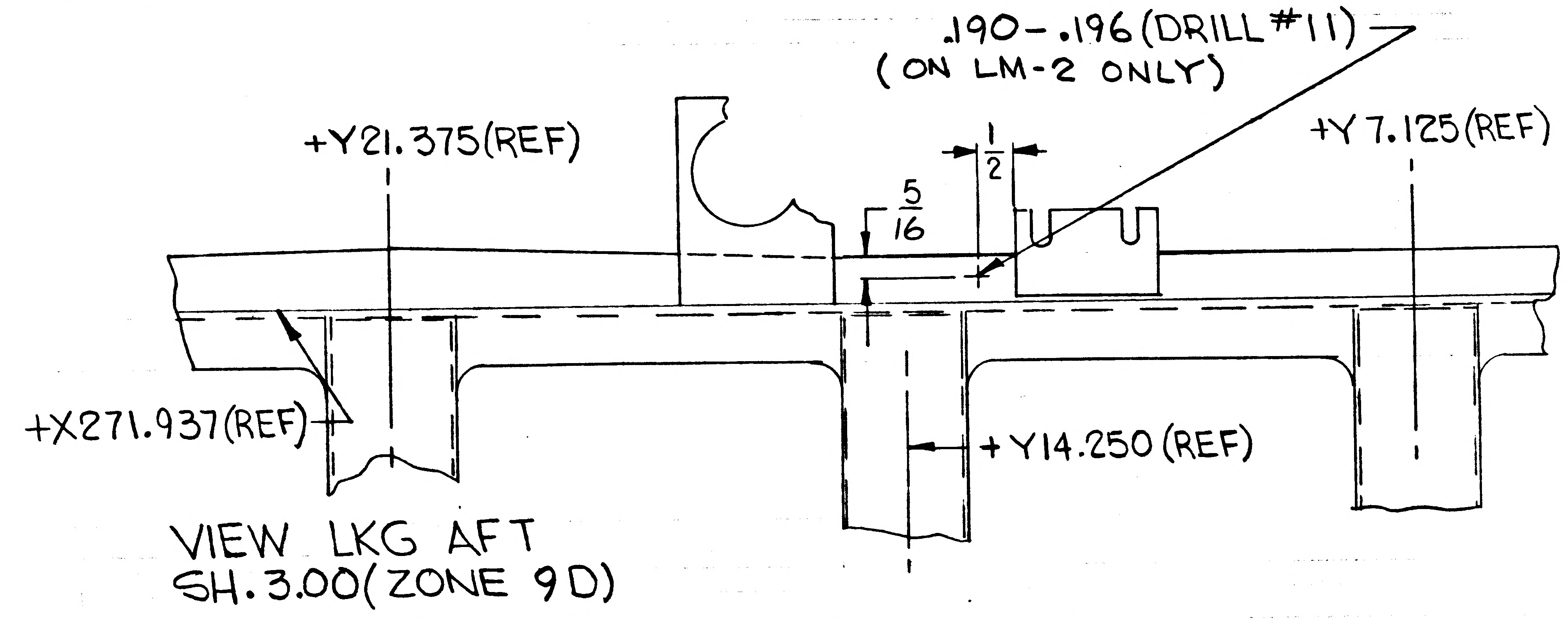
.190-.196 (DRILL #11)
(ON LM-2 ONLY)
+Y21.375(REF)
+Y 7.125(REF)
1/2
5/16
+X271.937(REF)
+Y14.250 (REF)
VIEW LKG AFT
SH.3.00(ZONE 9D)

LDW280-52405-1 ASSY

DETAIL SPEC REQ	☐	CL II ENGRG CHG ☑	CL I ENGRG CHG ☐	LCD 2270

REASON FOR EO	DESCRIPTION OF EO	GAEC EO RELEASE
TO LOCATE HOLE FOR GROUND STUD	ON-1 ASSY ADDED .190-.196 (DRILL #11) HOLE.	

MODEL	EFFECTIVITY			DRAWING CHANGE REQD		DISPOSITION OF PARTS		APPROVED BY								
	PROCURING ACTIVITY NO.	GAEC UNIT NO.	SUB CONTR UNIT NO.	REVISE DWG	RECORD EO	REWORK	SCRAP	DATE	11/10/67			11/8/67	11/11/67		11/11/67	11-14-67
LM		LM-2(32)		✓		✓		H	VDI	SUPPORT	RELIAB. GROUP	GROUP LEADER	STRESS GROUP	LIAISON ENGRG	PROJ ENGRG	GOVT

PRIORITY	DRAWING TITLE	DRAWING NO.	EO NO.
C	RACK ASSEMBLY ASCENT STAGE ~ AFT EQUIP. BAY ~ -Z60.5	LDW280-52405	F8

11/27
ISSUED BY DAN CAROLEO EX:1153 SECTION EQUIP. LINES/VDI GROUP NO. 332 PL 25

01 NAS 9-1100

ENG 32.2 REV 3-65

GRUMMAN AIRCRAFT ENGINEERING CORP.
CODE IDENT NO. 26512
ENGINEERING ORDER

DWG. NO. LDW280-52405
EO NO. F9
CONTROL INFO NO. LM-5-13710

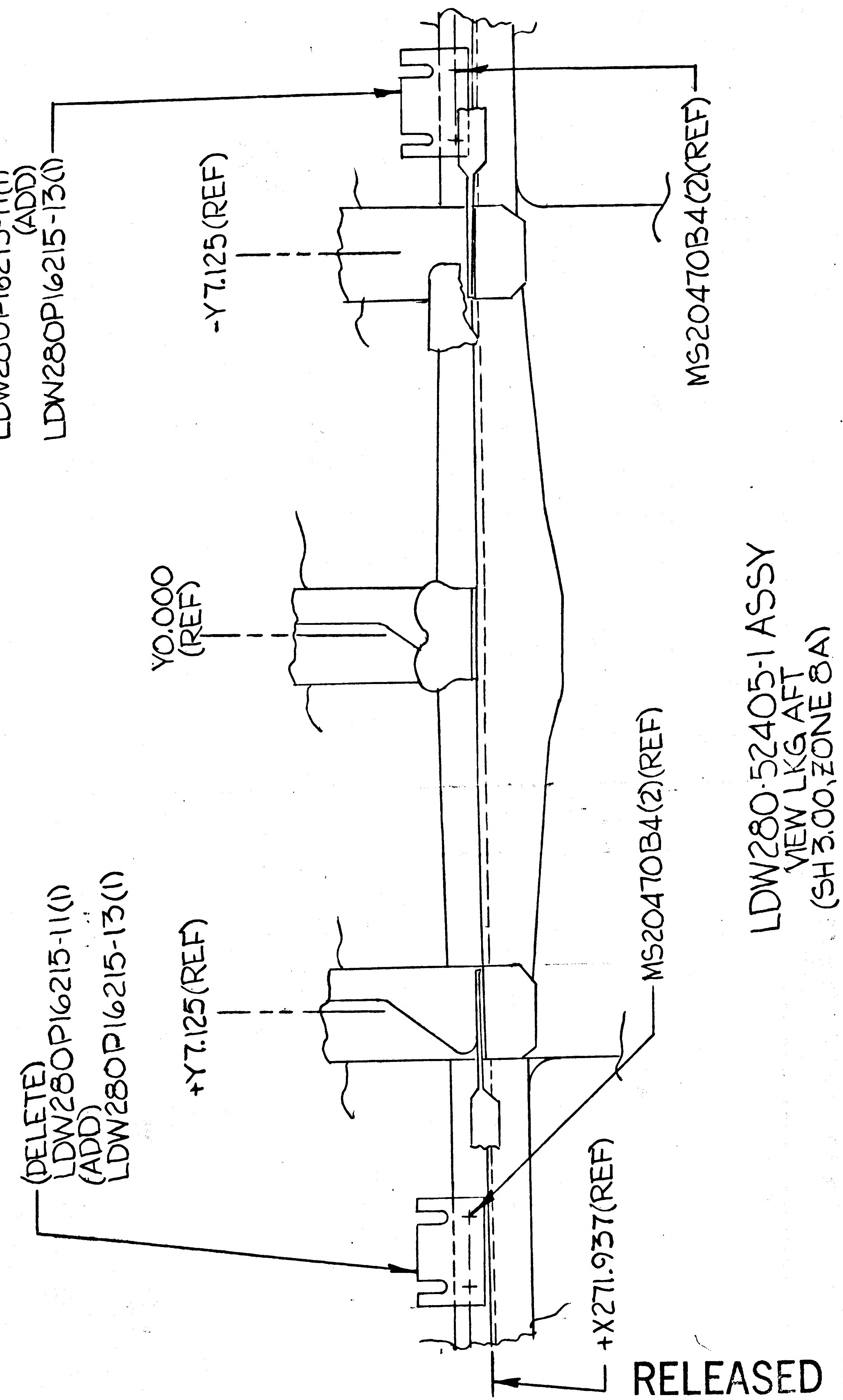

(DELETE)
LDW280P16215-11(1)
(ADD)
LDW280P16215-13(1)
-Y7.125(REF)
MS20470B4(2)(REF)
Y0.000
(REF)
+Y7.125(REF)
MS20470B4(2)(REF)
(DELETE)
LDW280P16215-11(1)
(ADD)
LDW280P16215-13(1)
+X271.937(REF)
LDW280-52405-1 ASSY
VIEW LKG AFT
(SH 3.00, ZONE 8A)

REWORK NOTES (NOT TO BE INC ON DWG):
x NO PICTURE CHG TO STRUCTURE REQD.
x x LDW280P16215-13 REPLACES -11.

RELEASED BY LIAISON

DETAIL SPEC REQ ☐ CL II ENGRG CHG ✓ CL I ENGRG CHG ☐

REASON FOR EO: ADD NEW FAIRLEAD FOR NON-CONFORMAL COATED WIRE

DESCRIPTION OF EO: ON-1 ADDED LDW280P16215-13(2); DELETED LDW280P16215-11(2)

GAEC EO RELEASE: JK 5

MODEL	PROCURING ACTIVITY NO.	GAEC UNIT NO.	SUB CONTR UNIT NO.
LM		LM-2(32)	

DRAWING CHANGE REQD: REVISE DWG ✓ RECORD EO ☐
DISPOSITION OF PARTS: REWORK ✓ SCRAP ☐

APPROVED BY								
DATE	12/21/67			—	12/2/67	12/1/67	12/21/67	12 4 67
	VD1	SUPPORT	RELIAB. GROUP	GROUP LEADER	STRESS GROUP	LIAISON ENGRG	PROJ ENGRG	~~CONT~~

PRIORITY: C
DRAWING TITLE: RACK ASSY-A/S-AEB,-Z60.5
DRAWING NO.: LDW280-52405
EO NO.: F9

ISSUED BY R. BIDONDE X86454 11/28/67 SECTION VD1 GROUP NO. 332 PL 5

01 NAS 9-1100

ENG 32.1 REV 3-65

GRUMMAN AIRCRAFT ENGINEERING CORP.
CODE IDENT NO. 26512
ENGINEERING ORDER

DWG. NO.	LDW280-52405	EO NO.	F10
CONTROL INFO NO.	LDW280B1478		

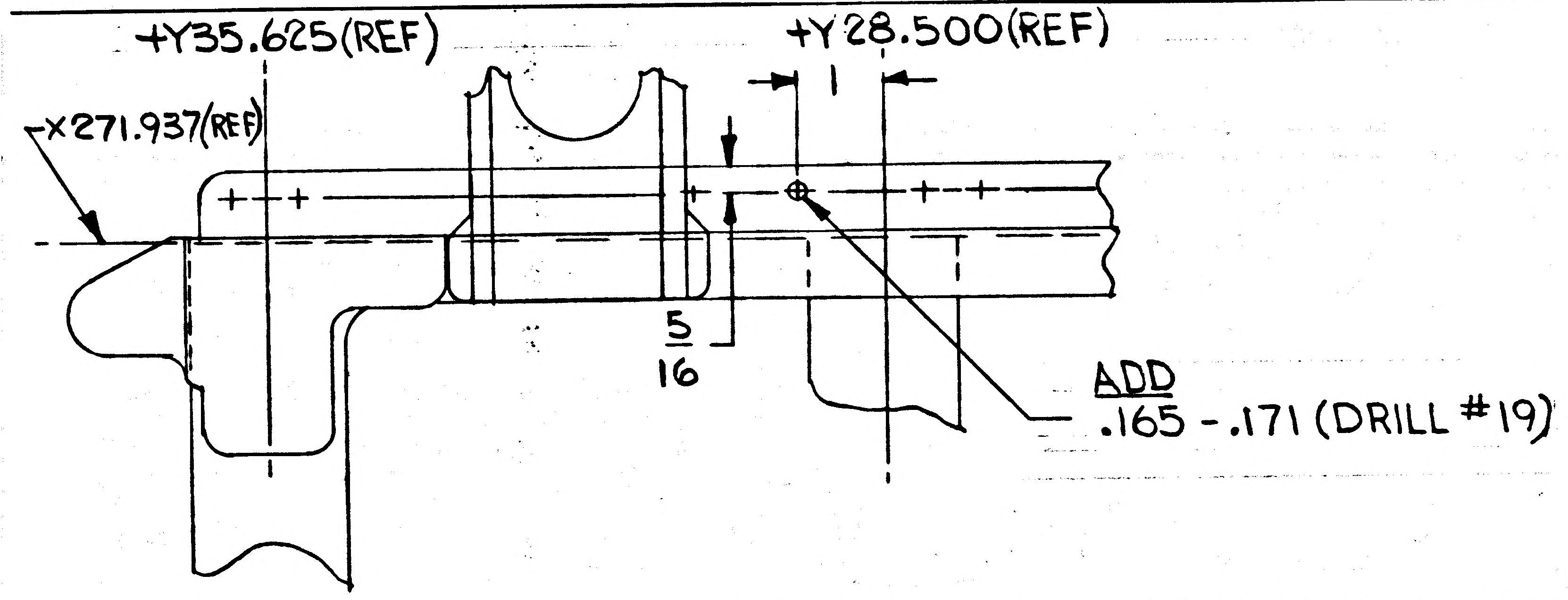

LDW280-52405-1 ASSY
VIEW LOOKING AFT
SH 3.00 (ZONE 9C)

DETAIL SPEC REQ	☐	CL II ENGRG CHG	☑	CL I ENGRG CHG	☐	LCD 1078 PKG 58 (5)

REASON FOR EO: TO PROVIDE SUPPORT FOR WIRING

DESCRIPTION OF EO: ON -1 ASSY ADDED HOLE DRILL #19 (.165-.171)

GAEC EO RELEASE: JK 1/25/68

MODEL	EFFECTIVITY			DRAWING CHANGE REQD		DISPOSITION OF PARTS		APPROVED BY							
	PROCURING ACTIVITY NO.	GAEC UNIT NO.	SUB CONTR UNIT NO.					DATE	1/18/68			1-18-68	1-23-68	1/18/68	1-25-68
LM		LM-2 (32)		✓ REVISE DWG	RECORD EO	✓ REWORK	SCRAP	E	VDI	SUPPORT	RELIAB. GROUP	GROUP LEADER	STRESS GROUP	LIAISON ENGRG	PROJ ENGRG

PRIORITY	DRAWING TITLE	DRAWING NO.	EO NO.
C	RACK ASSY - ASCENT STAGE AFT EQUIP BAY -Z 60.5	LDW280-52405	F10

1-19-68
ISSUED BY DAN CAROLEO EX: 1153 SECTION EQUIP. LINES/VDI GROUP NO. 332 PL 25

01

NAS 9-1100

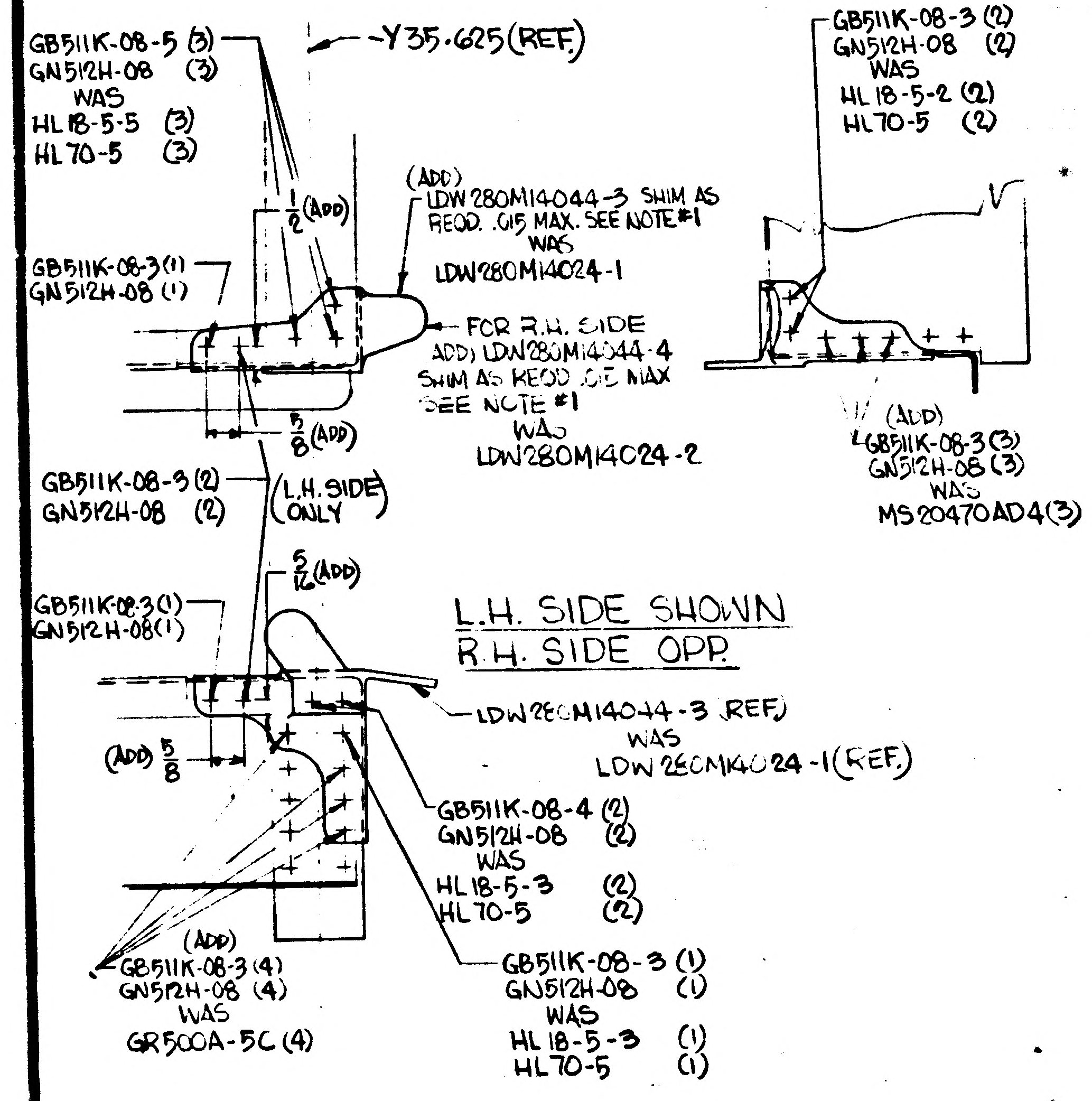

GB511K-08-5 (3)
GN512H-08 (3)
WAS
HL18-5-5 (3)
HL70-5 (3)
-Y35.625(REF.)
1/2 (ADD)
(ADD)
LDW280M14044-3 SHIM AS REQD. .015 MAX. SEE NOTE #1
WAS
LDW280M14024-1
GB511K-08-3 (1)
GN512H-08 (1)
FOR R.H. SIDE
ADD) LDW280M14044-4
SHIM AS REQD .015 MAX
SEE NOTE #1
WAS
LDW280M14024-2
5/8 (ADD)
GB511K-08-3 (2)
GN512H-08 (2)
(L.H. SIDE ONLY)
5/16 (ADD)
GB511K-08-3 (1)
GN512H-08 (1)
GB511K-08-3 (2)
GN512H-08 (2)
WAS
HL18-5-2 (2)
HL70-5 (2)
(ADD)
GB511K-08-3 (3)
GN512H-08 (3)
WAS
MS20470AD4 (3)
L.H. SIDE SHOWN
R.H. SIDE OPP.
LDW280M14044-3 (REF.)
WAS
LDW280M14024-1 (REF.)
(ADD) 5/8
GB511K-08-4 (2)
GN512H-08 (2)
WAS
HL18-5-3 (2)
HL70-5 (2)
(ADD)
GB511K-08-3 (4)
GN512H-08 (4)
WAS
GR500A-5C (4)
GB511K-08-3 (1)
GN512H-08 (1)
WAS
HL18-5-3 (1)
HL70-5 (1)

01

NAS 9-1100

ENG 32.2 REV 3-65

GRUMMAN AIRCRAFT ENGINEERING CORP.
CODE IDENT NO 26512
ENGINEERING ORDER

DWG NO. LDW280-52405		EO NO. E7
CONTROL INFO NO. LDW280A-3870		

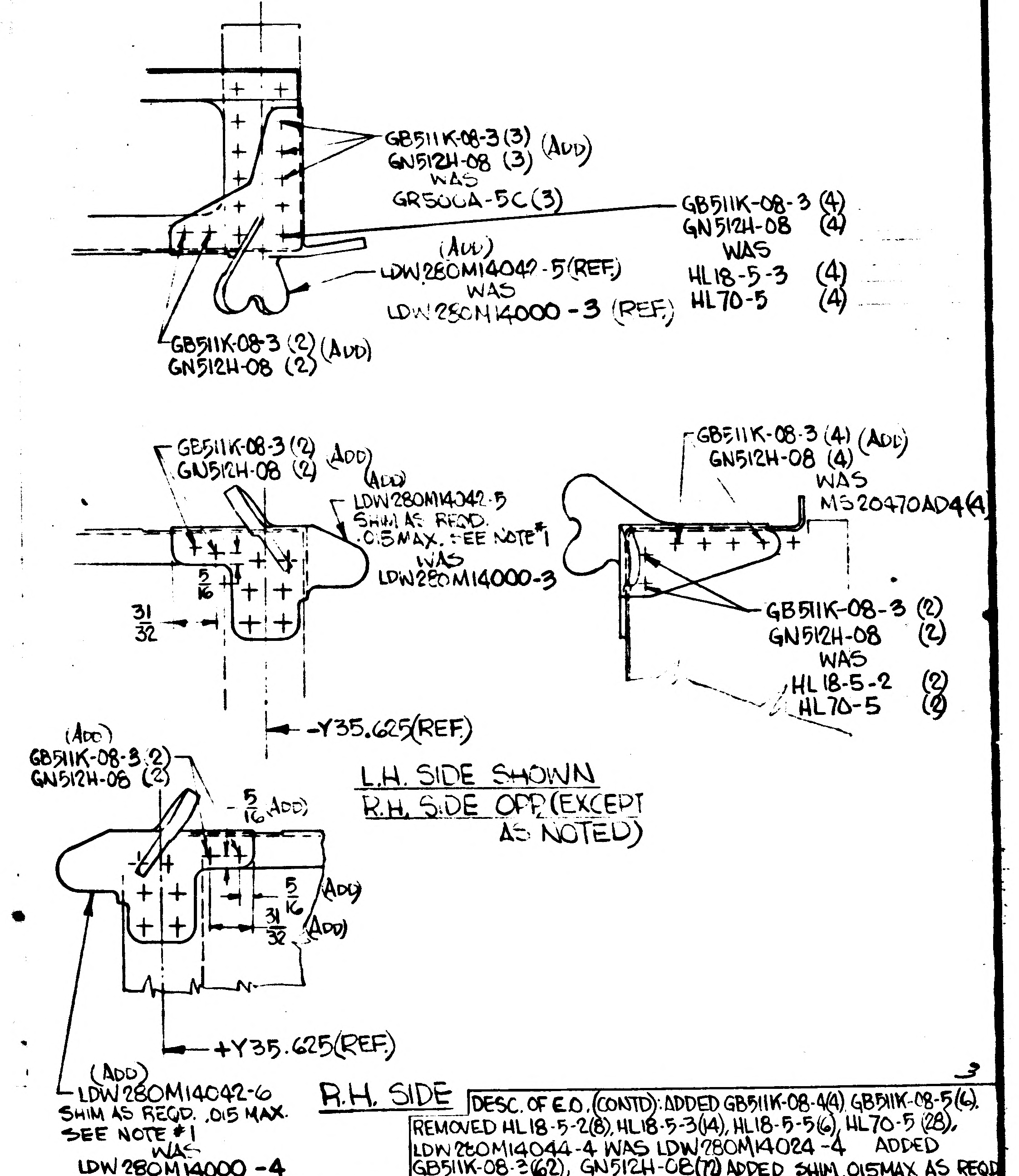

GB511K-08-3 (3) (ADD)
GN512H-08 (3)
WAS
GR500A-5C (3)
GB511K-08-3 (4)
GN512H-08 (4)
WAS
HL18-5-3 (4)
HL70-5 (4)
(ADD)
LDW280M14042-5 (REF.)
WAS
LDW280M14000-3 (REF.)
GB511K-08-3 (2) (ADD)
GN512H-08 (2)
GB511K-08-3 (2) (ADD)
GN512H-08 (2)
(ADD)
LDW280M14042-5
SHIM AS REQD.
.015 MAX. SEE NOTE #1
WAS
LDW280M14000-3
5/16
31/32
GB511K-08-3 (4) (ADD)
GN512H-08 (4)
WAS
MS20470AD4 (4)
GB511K-08-3 (2)
GN512H-08 (2)
WAS
HL18-5-2 (2)
HL70-5 (2)
-Y35.625 (REF.)
(ADD)
GB511K-08-3 (2)
GN512H-08 (2)
5/16 (ADD)
L.H. SIDE SHOWN
R.H. SIDE OPP. (EXCEPT AS NOTED)
1/4
5/16 (ADD)
31/32 (ADD)
+Y35.625 (REF.)
(ADD)
LDW280M14042-6
SHIM AS REQD. .015 MAX.
SEE NOTE #1
WAS
LDW280M14000-4
R.H. SIDE

3

DESC. OF E.O. (CONTD): ADDED GB511K-08-4(4), GB511K-08-5(6). REMOVED HL18-5-2(8), HL18-5-3(14), HL18-5-5(6), HL70-5 (28), LDW280M14044-4 WAS LDW280M14024-4 ADDED GB511K-08-3(62), GN512H-08(72) ADDED SHIM .015MAX AS REQD

DETAIL SPEC REQ	CL II ENGRG CHG	CL I ENGRG CHG	LCR #667

REASON FOR E.O.: FAILURE ON STRUCTURAL TEST

DESCRIPTION OF E.O.: ON - ADDED LDW280M14042-5 WAS LDW280M14000-3, LDW280M14042-6 WAS LDW280M14000-4, LDW280M14044-3 WAS LDW280M14024-3 CONTD ABOVE

GAEC EO RELEASE: C

MODEL	EFFECTIVITY: PROCURING ACTIVITY NO.	GAEC UNIT NO	SUB CONTR UNIT NO
LM		LM-2 (32)	

DRAWING CHANGE REQD: REVISE DWG	RECORD EO	DISPOSITION OF PARTS: REWORK	SCRAP	APPROVED BY									
✓		✓		DATE	12-6-66				12/6			12-6-66	
				1	V.D.L	SUPPORT	RELIAB GROUP	GROUP LEADER	STRESS GROUP	LIAISON ENGRG	PROJ ENGRG		

PROJ	DRAWING TITLE	DRAWING NO	EO NO.
C	RACK ASSEMBLY ASCENT STAGE ~ AFT EQUIP. BAY ~ -Z60.50	LDW280-52405	E7

ISSUED BY W. PAVLIK 12-1-66 SECTION VEH. DES. INT. GROUP NO. 335 PL. 35

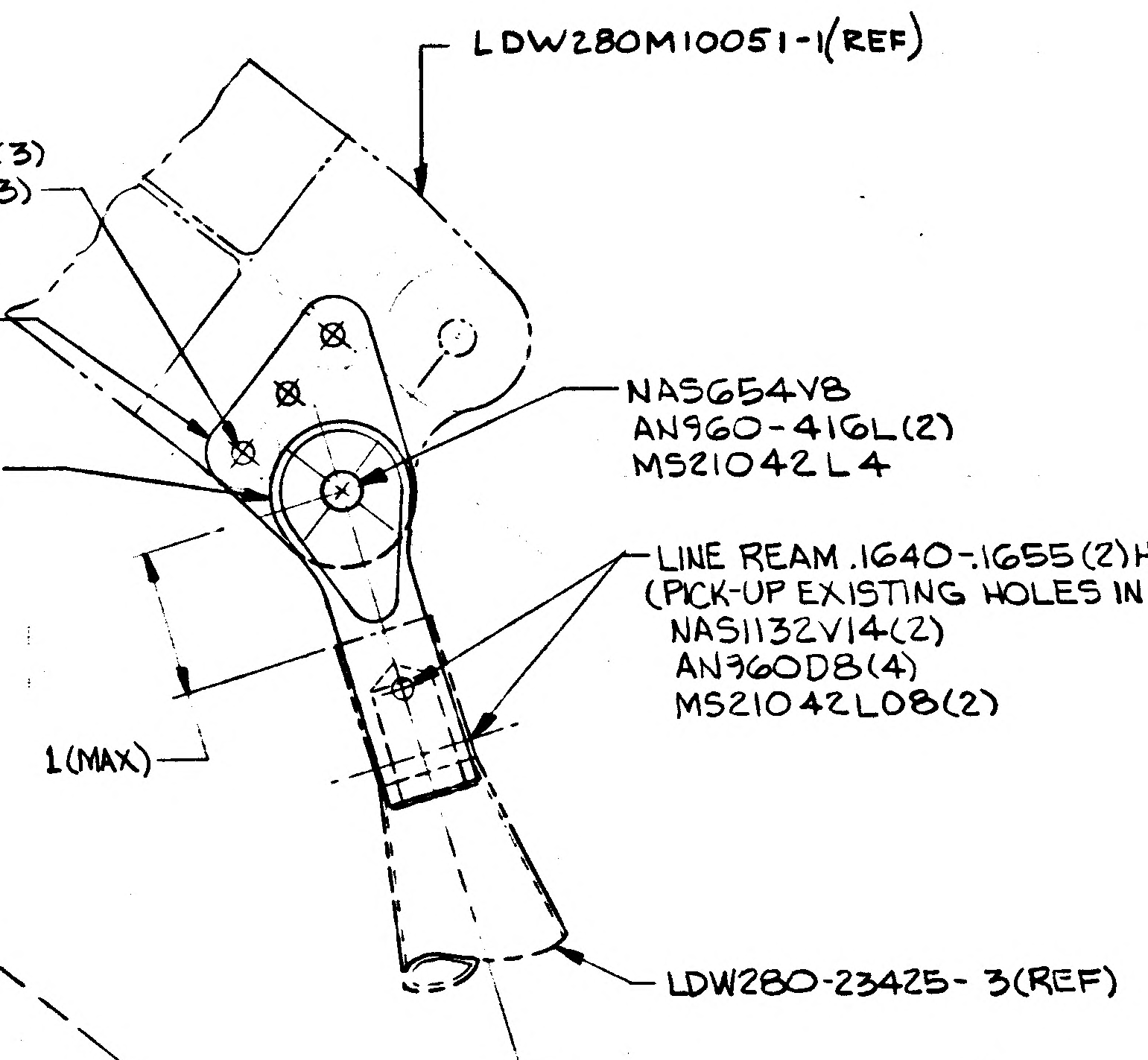
LDW280M10051-1(REF)
GB511J-06-4(3)
MS21042L06(3)
(SEE NOTE 3)
LDW280-14250-11(REF)
LDW280M14003-3
(REMOVE LDW280M14003-1)
NAS654V8
AN960-416L(2)
MS21042L4
LINE REAM .1640-.1655(2)HOLES
(PICK-UP EXISTING HOLES IN LDW280-23425-3)
NAS1132V14(2)
AN960D8(4)
MS21042L08(2)
1(MAX)
LDW280-23425-3(REF)
H
H

VIEW H-H
SCALE: FULL

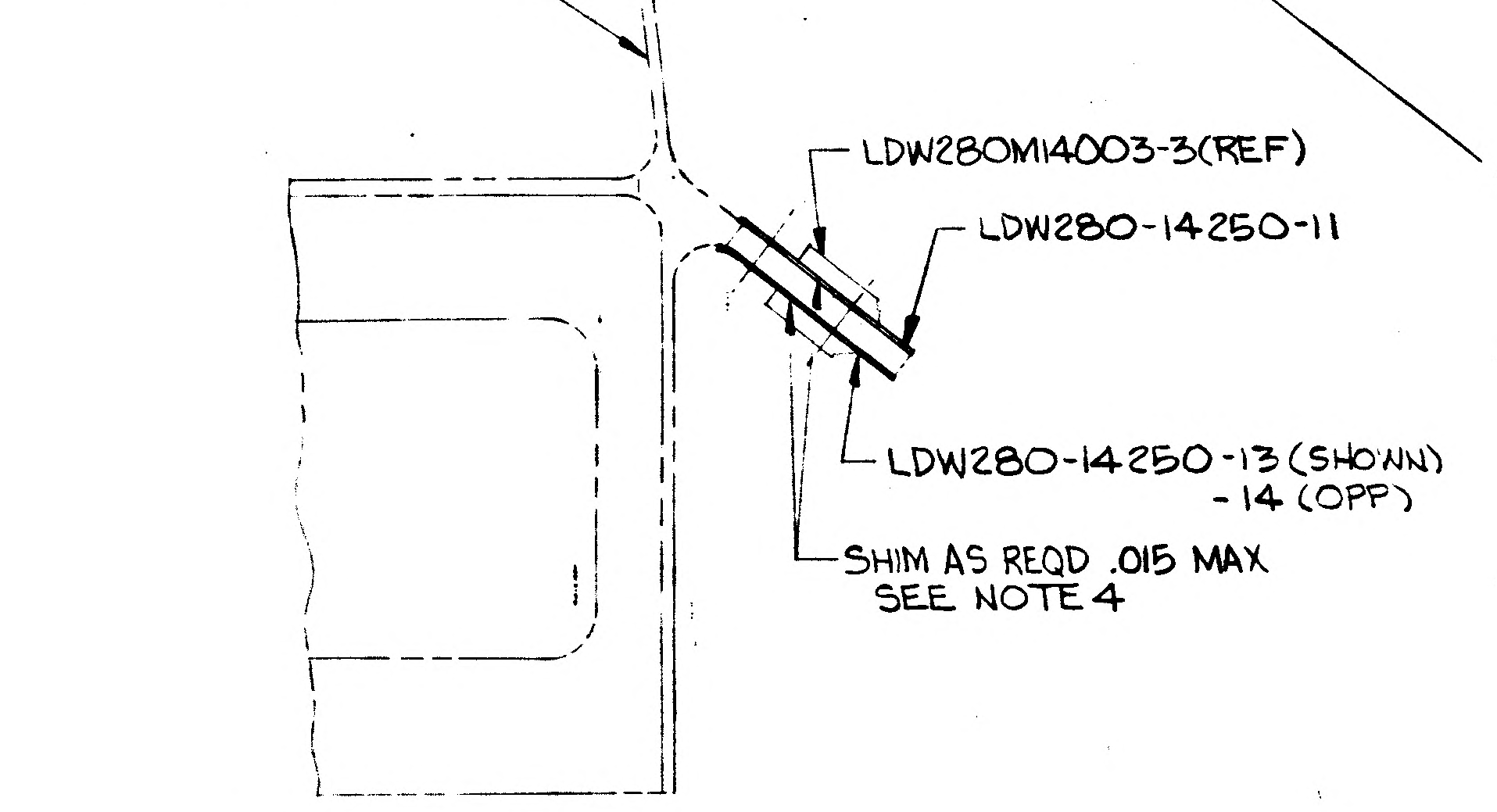
LDW280M10051-1 (REF)
LDW280M14003-3(REF)
LDW280-14250-11
LDW280-14250-13 (SHOWN)
-14 (OPP)
SHIM AS REQD .015 MAX
SEE NOTE 4

DETAIL G
SCALE: FULL

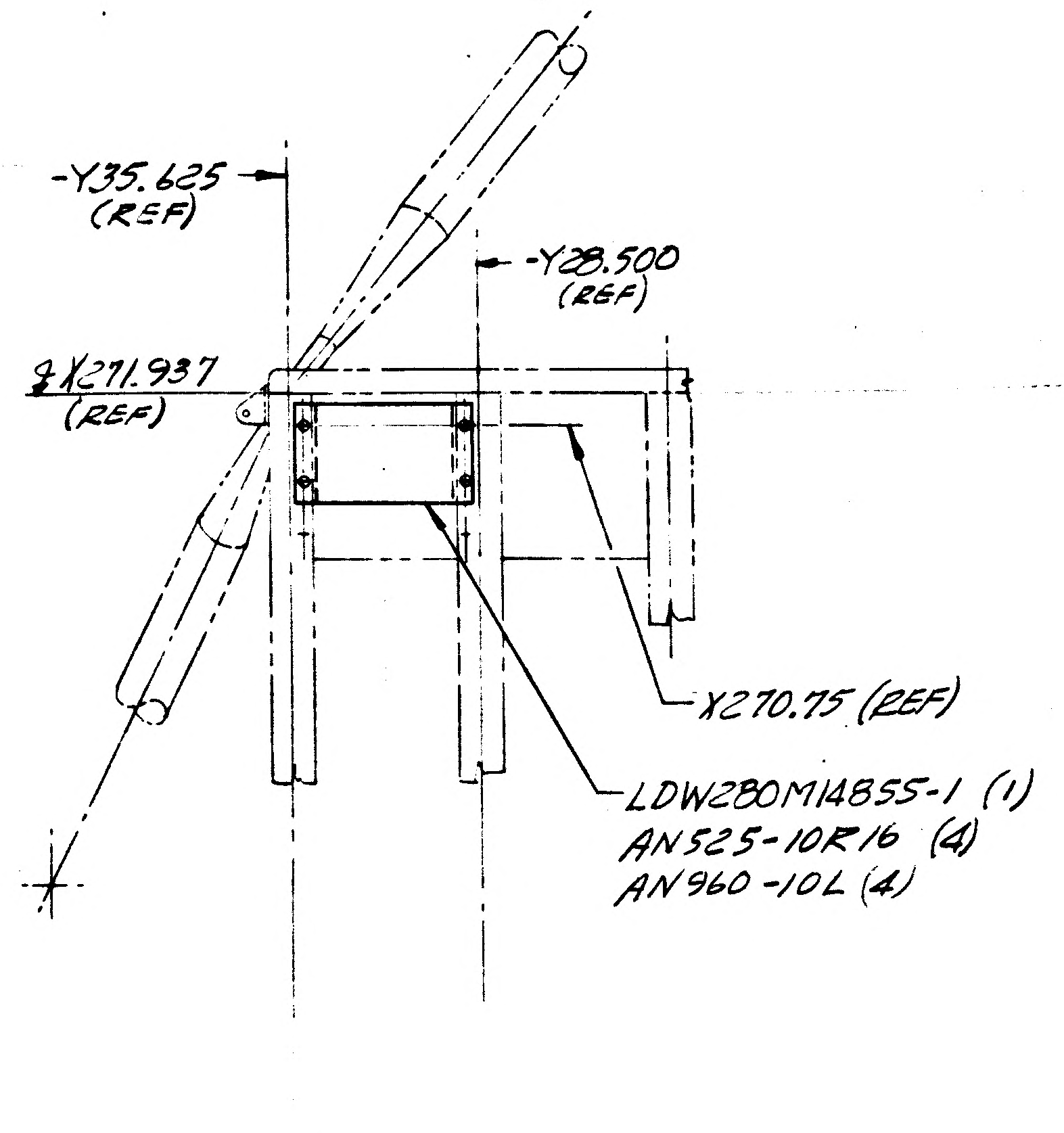
-Y35.625
(REF)
-Y28.500
(REF)
℄ X271.937
(REF)
X270.75 (REF)
LDW280M14855-1 (1)
AN525-10R16 (4)
AN960-10L (4)

LDW280-52436-5 INSTALLATION
(VIEW LOOKING FWD. @ LDW280-52405 RACK ASSY)
SCALE = 1/5

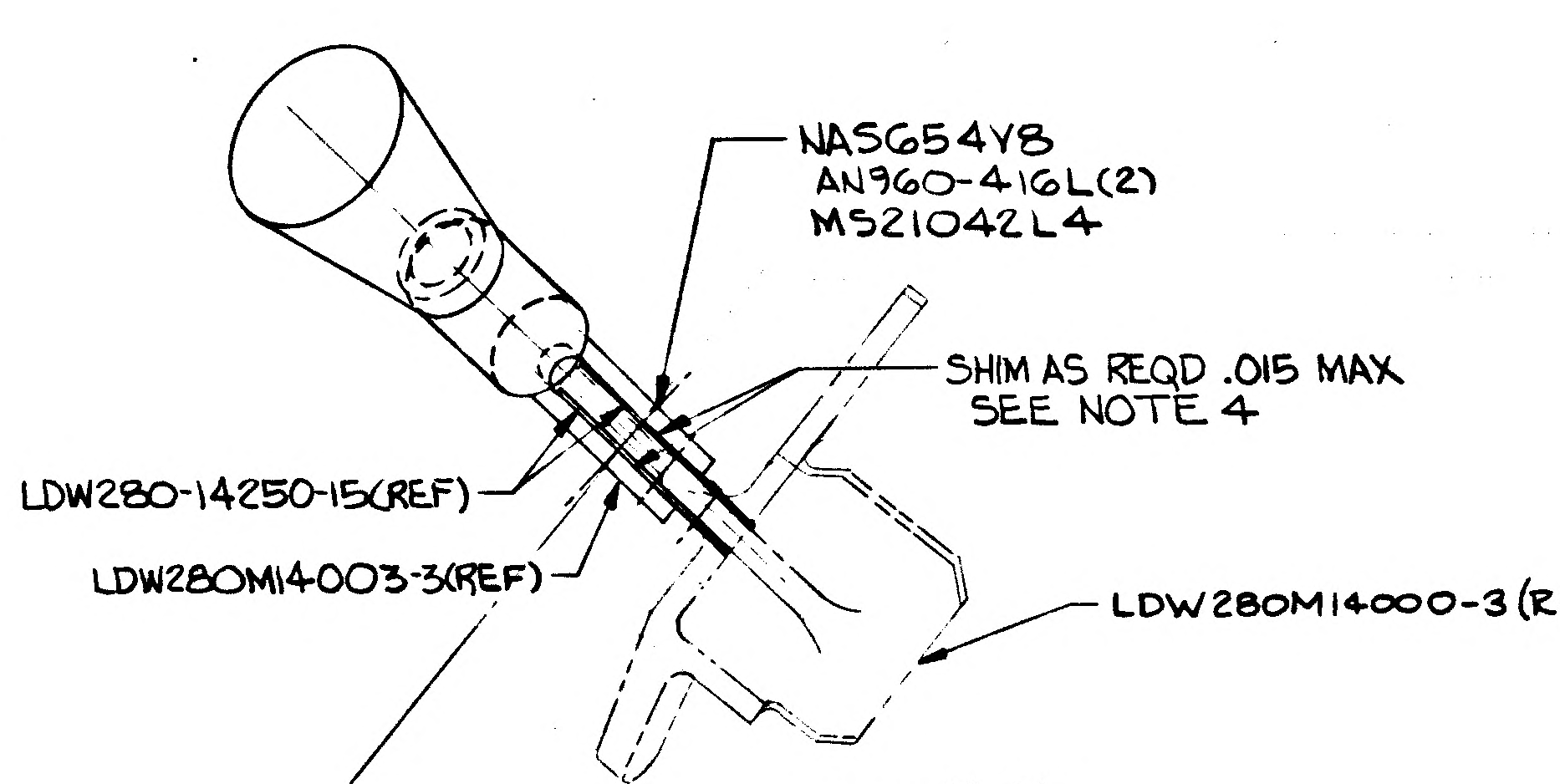
NAS654V8
AN960-416L(2)
MS21042L4
SHIM AS REQD .015 MAX
SEE NOTE 4
LDW280-14250-15(REF)
LDW280M14003-3(REF)
LDW280M14000-3(REF)

VIEW K-K
SCALE: FULL

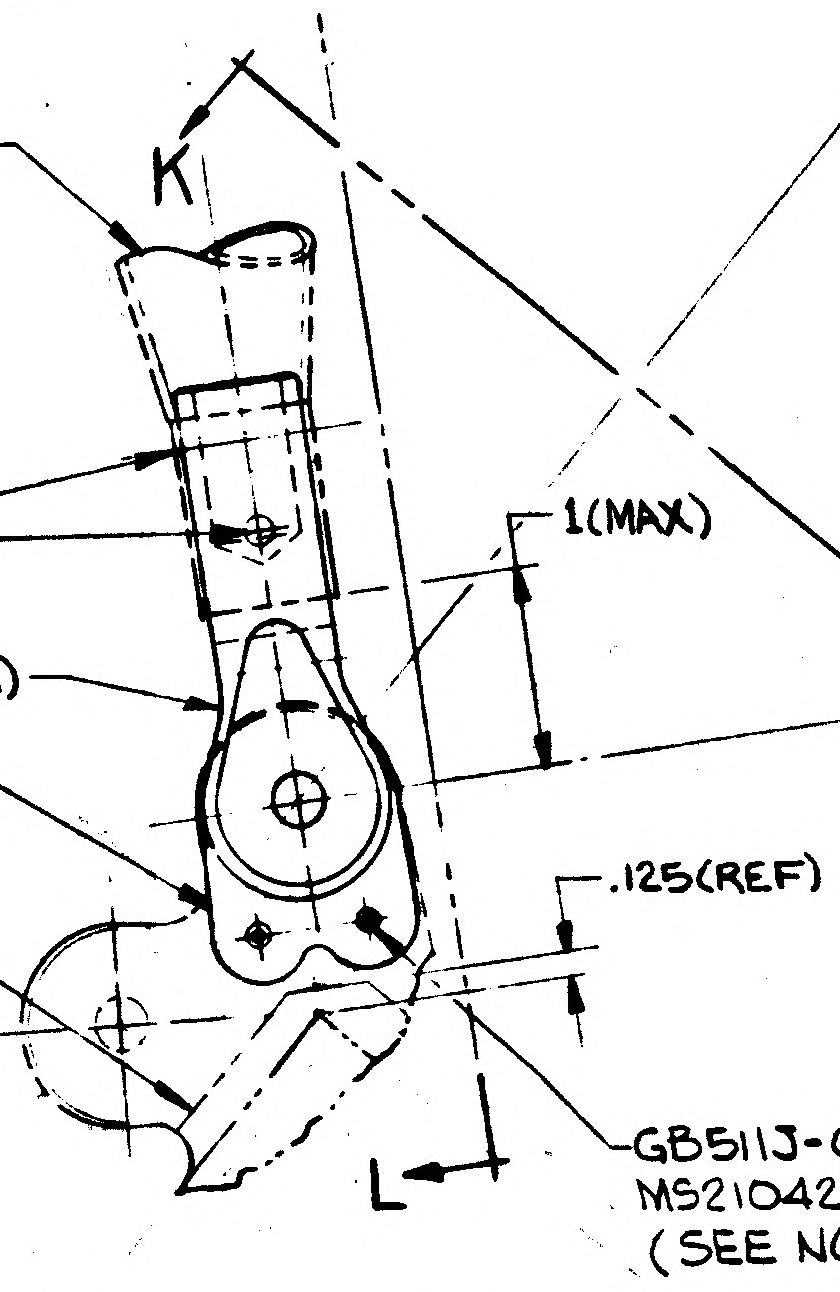
L
L
K
K
LDW280-23425-3(REF)
LINE REAM .1640-.1655(2) HOLES
(PICK-UP EXISTING HOLES IN
LDW280-23425-3)
NAS1132V14(2)
AN960D8(4)
MS21042L08(2)
1(MAX)
LDW280M14003-3
(REMOVE LDW280M14003-1)
LDW280-14250-15(2)
.125(REF)
FILLET RAD TAN LINE(REF)
LDW280M14000-3 (REF)(SHOWN)
-4 (REF)(OPP)
GB511J-06-4(2)
MS21042L06(2)
(SEE NOTE 3)

VIEW J-J
(TRUE VIEW OF LUG)
SCALE: FULL

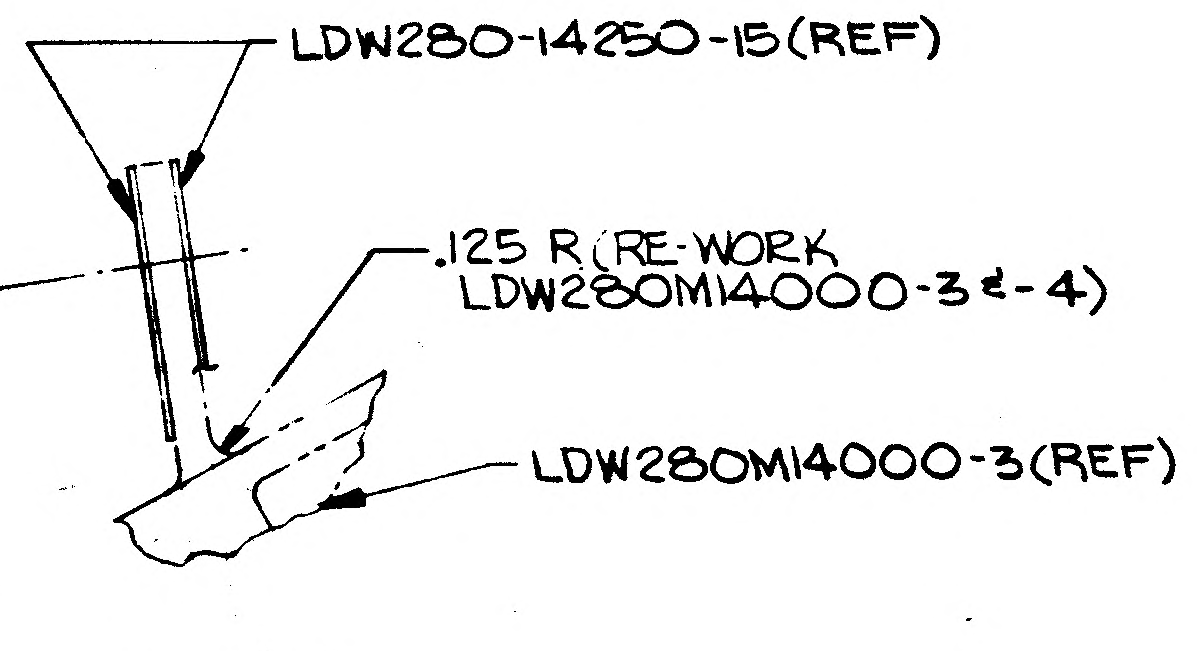
LDW280-14250-15(REF)
.125 R (RE-WORK
LDW280M14000-3 & -4)
LDW280M14000-3(REF)

VIEW L-L
SCALE: FULL

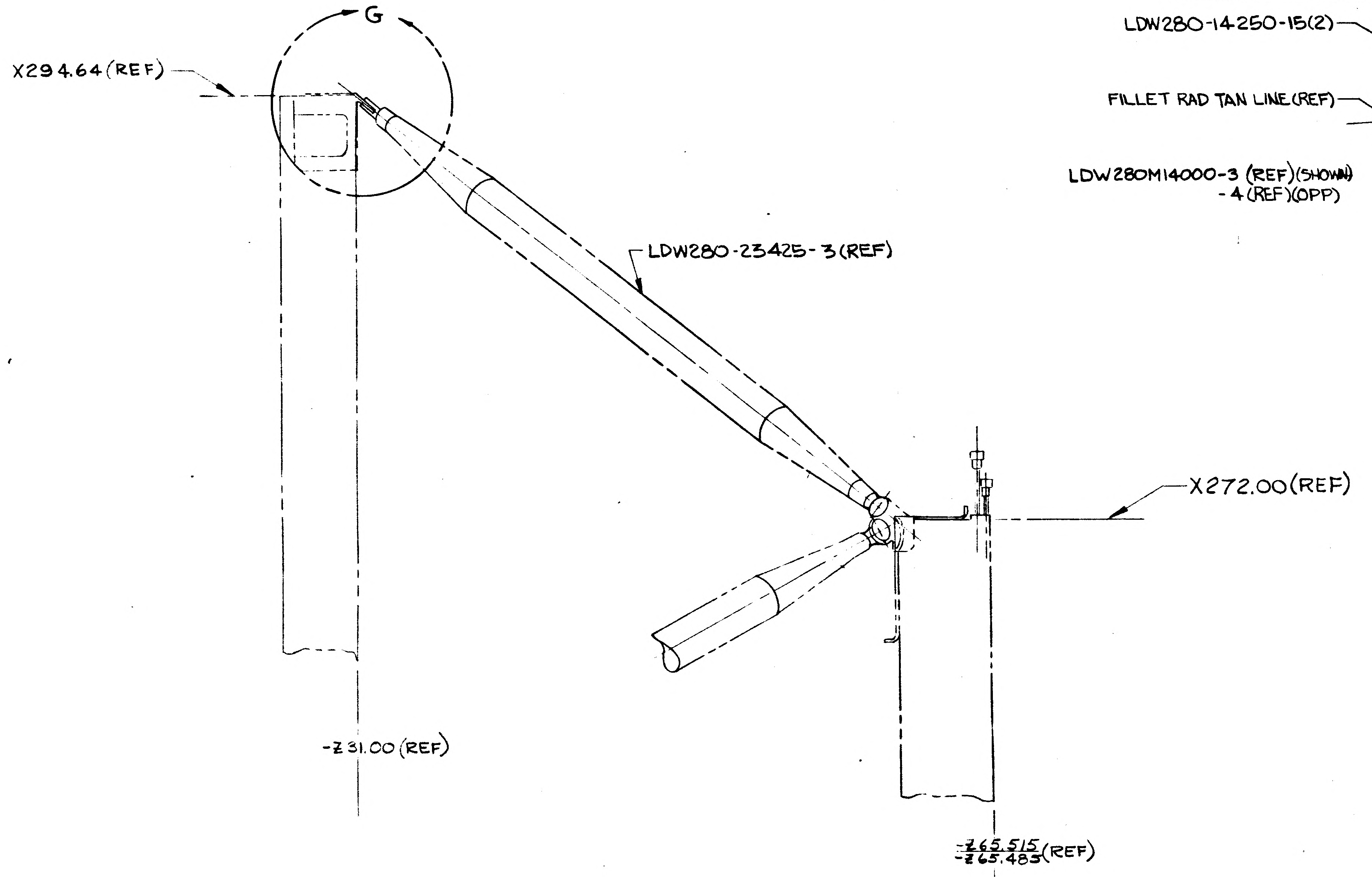
G
X294.64(REF)
LDW280-23425-3(REF)
X272.00(REF)
-Z31.00 (REF)
-Z65.515
-Z65.483 (REF)

— VIEW LKG INBD —
SCALE: 1/4

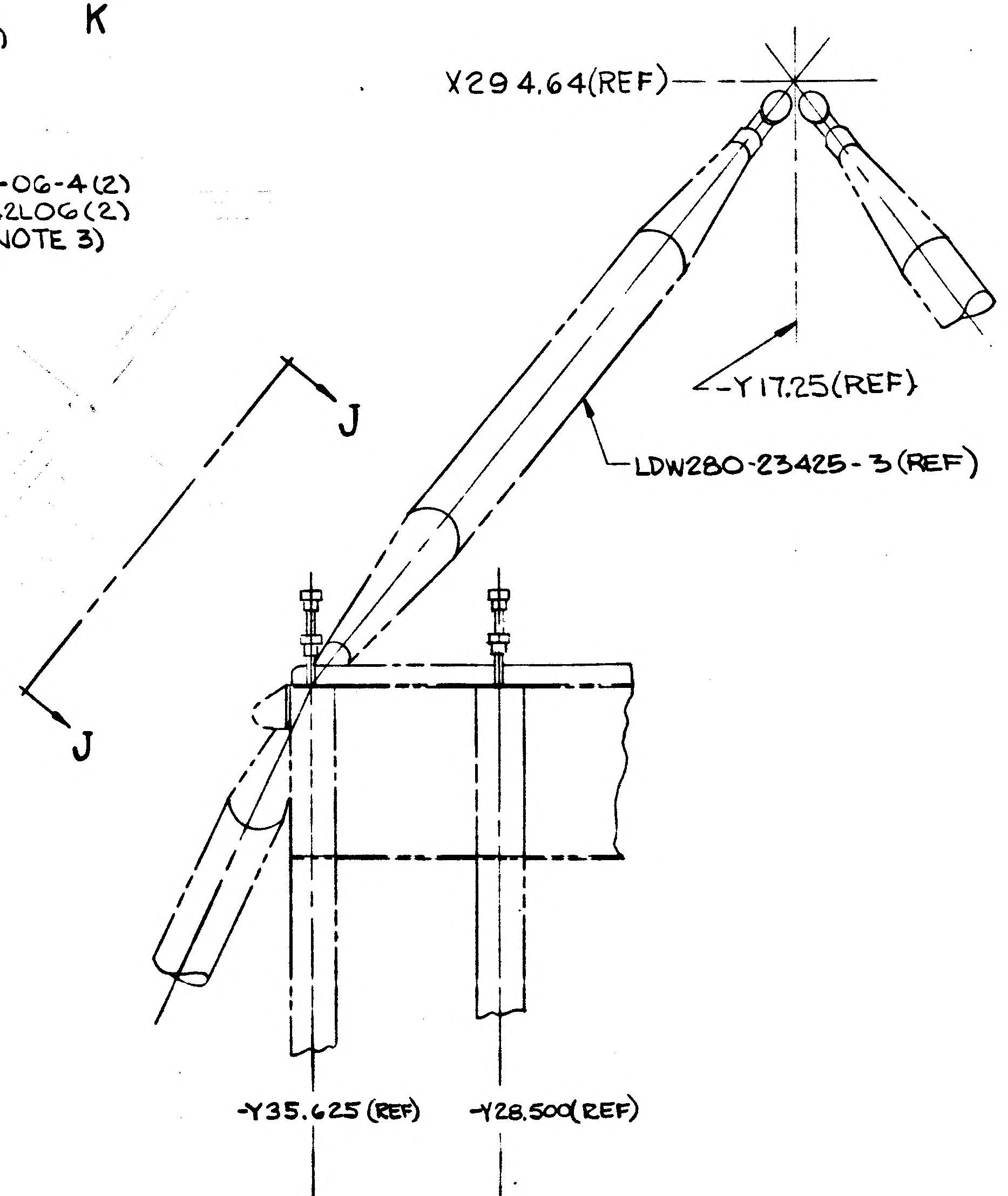
X294.64(REF)
-Y17.25(REF)
LDW280-23425-3 (REF)
J
J
-Y35.625 (REF)
-Y28.500(REF)

— VIEW LKG FWD —

LDW280-52436-3 INSTL (SHOWN)
-4 INSTL (OPP)
SCALE: 1/4

01/03 NAS 9-1100

4)

(REF)

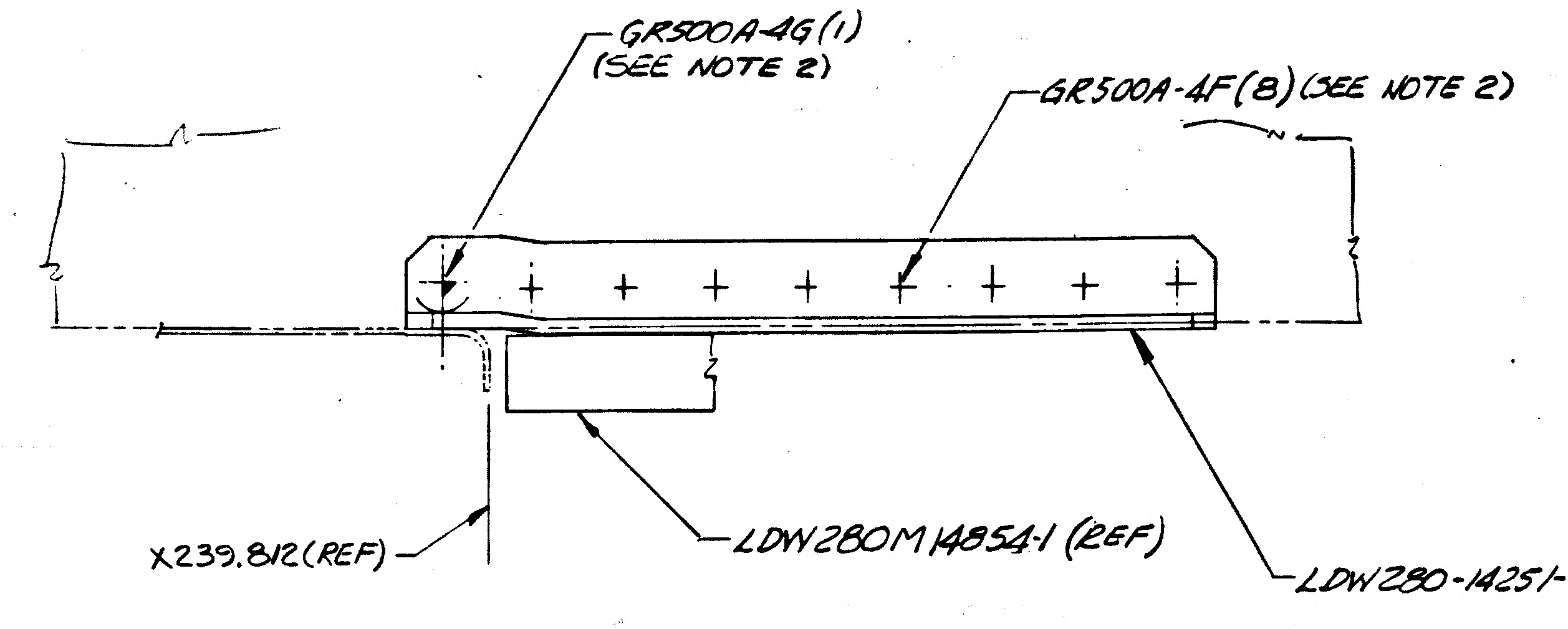
GR500A-4G (1)
(SEE NOTE 2)
GR500A-4F (8) (SEE NOTE 2)
X239.812 (REF)
LDW280M14854-1 (REF)
LDW280-14251-17 (REF)

SECTION F-F
(ROTATED 90° CW)
SCALE: FULL

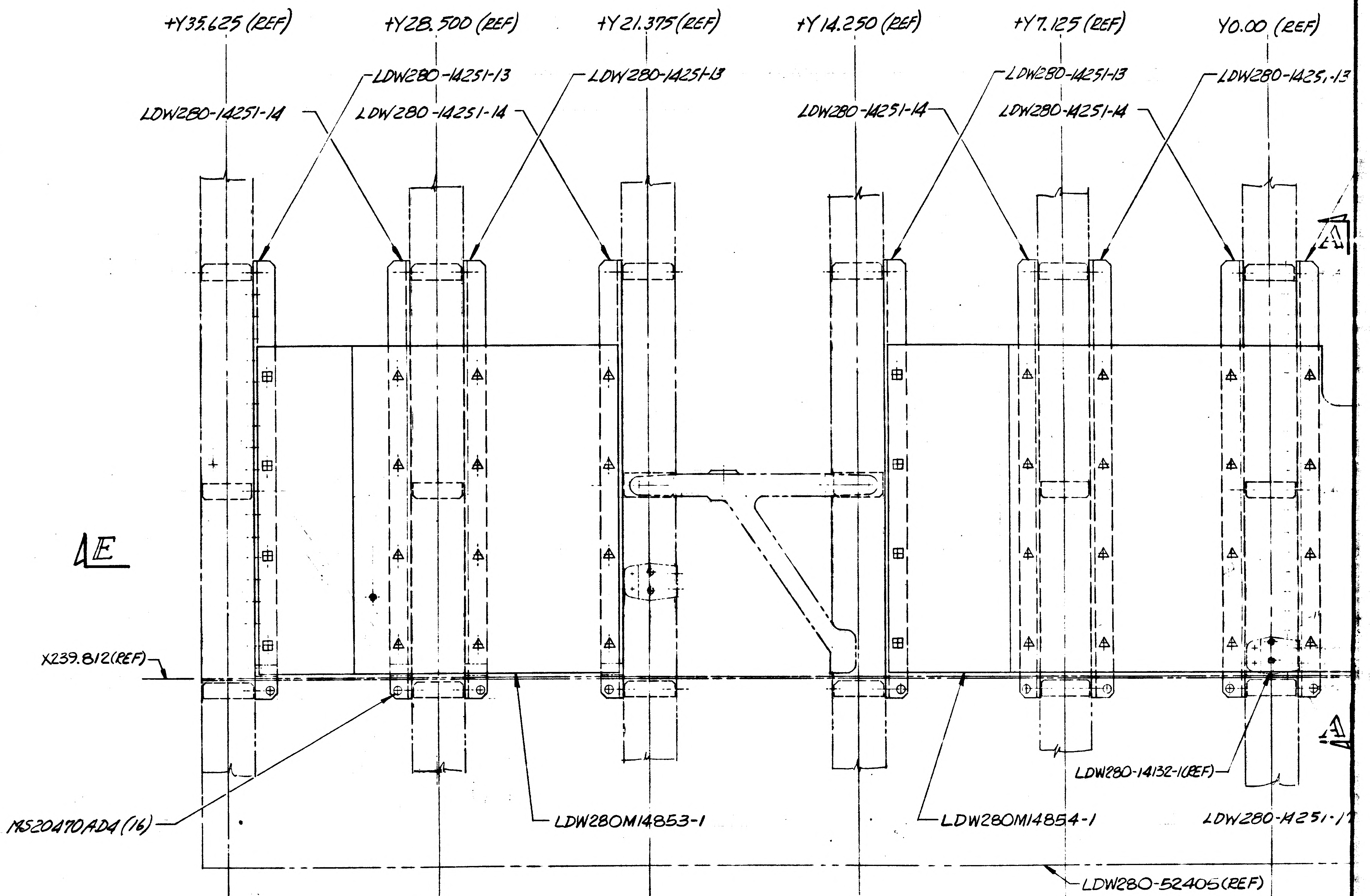
+Y35.625 (REF)
+Y28.500 (REF)
+Y21.375 (REF)
+Y14.250 (REF)
+Y7.125 (REF)
Y0.00 (REF)
LDW280-14251-14
LDW280-14251-13
LDW280-14251-14
LDW280-14251-13
LDW280-14251-14
LDW280-14251-13
LDW280-14251-14
LDW280-1425,-13
E
X239.812 (REF)
MS20470AD4 (16)
LDW280M14853-1
LDW280M14854-1
LDW280-14132-1 (REF)
LDW280-1425/-1
LDW280-52405 (REF)
A
A

LDW280-52436-L
(VIEW LOOKING

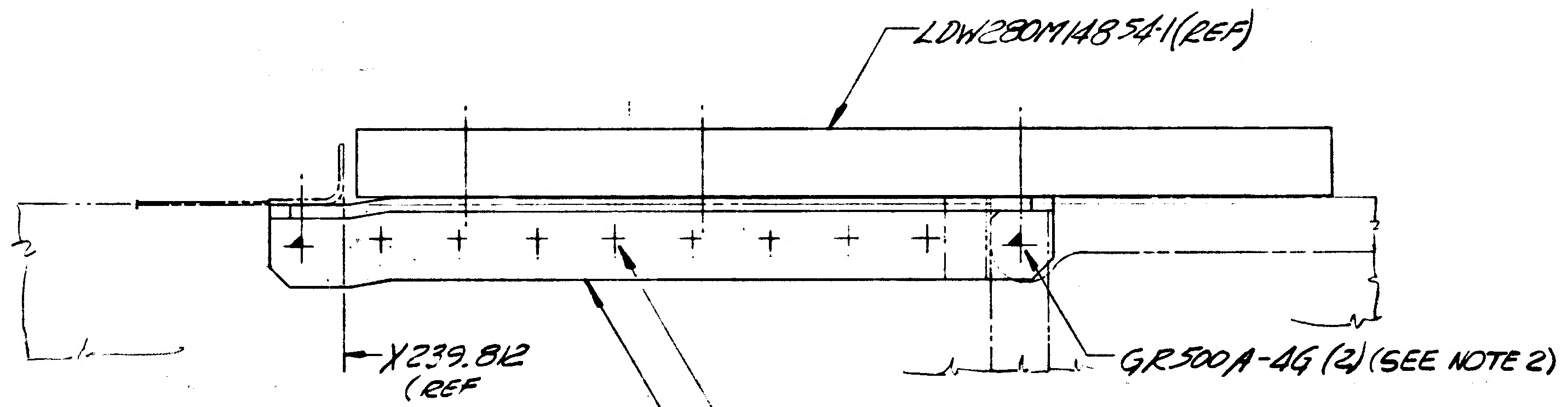
LDW280M14854-1 (REF)
X239.812
(REF
GR500A-4G (2) (SEE NOTE 2)
GR500A-4F (8) (SEE NOTE 2)
LDW280-14251-15 (REF)

SECTION B-B
(ROTATED 90° CW)
SCALE: FULL

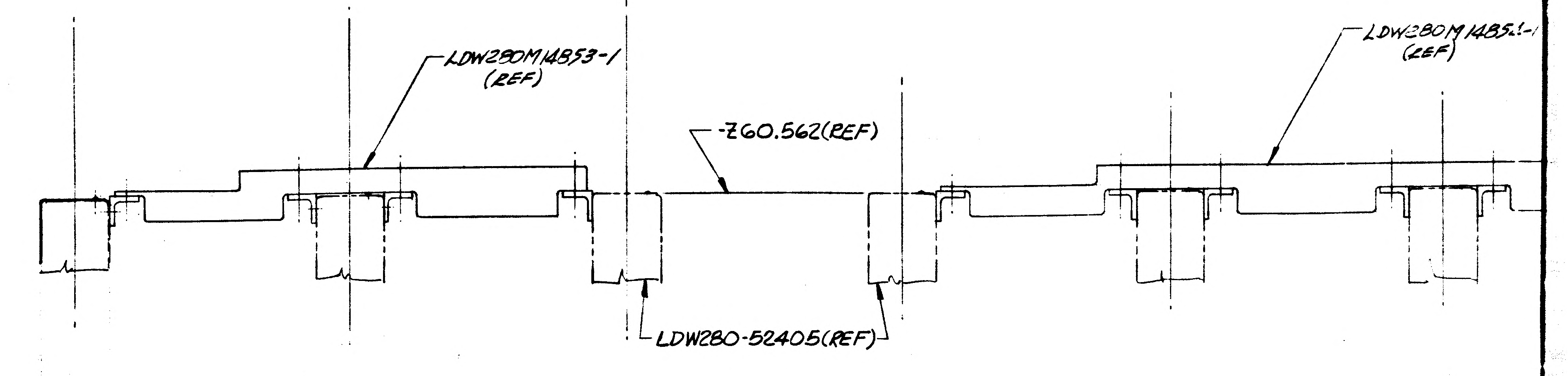
LDW280M14853-1
(REF)
LDW280M1485
(REF)
Z60.562 (REF)
LDW280-52405 (REF)

SECTION E-E

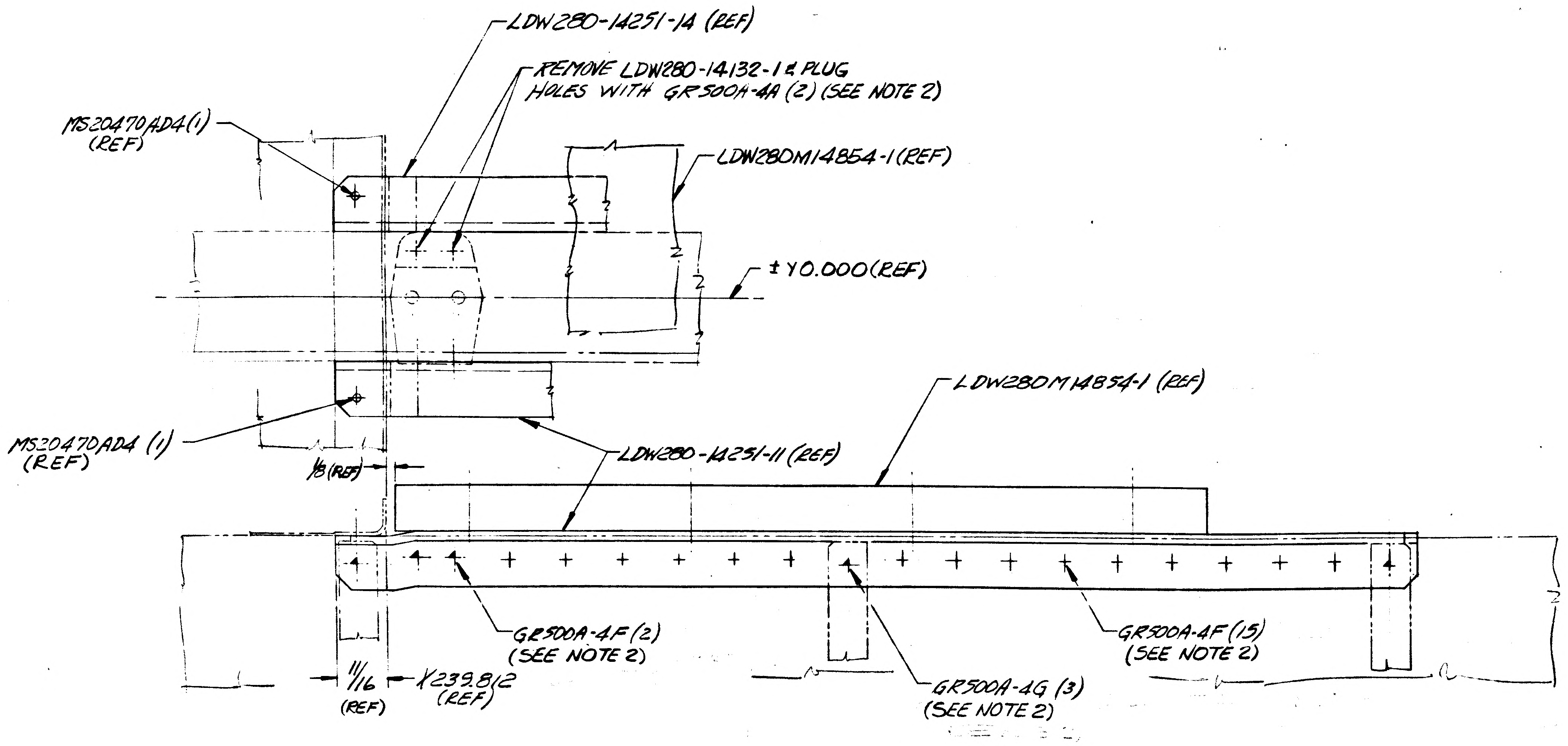
LDW280-14251-14 (REF)
REMOVE LDW280-14132-1 & PLUG
HOLES WITH GR500A-4A (2) (SEE NOTE 2)
MS20470AD4 (1)
(REF)
LDW280M14854-1 (REF)
±Y0.000 (REF)
LDW280M14854-1 (REF)
MS20470AD4 (1)
(REF)
LDW280-14251-11 (REF)
1/8 (REF)
GR500A-4F (2)
(SEE NOTE 2)
GR500A-4F (15)
(SEE NOTE 2)
GR500A-4G (3)
(SEE NOTE 2)
11/16
(REF)
X239.812
(REF)

SECTION A-A
(ROTATED 90° CW)
SCALE: FULL

02/03 NAS 9-1100

H-333

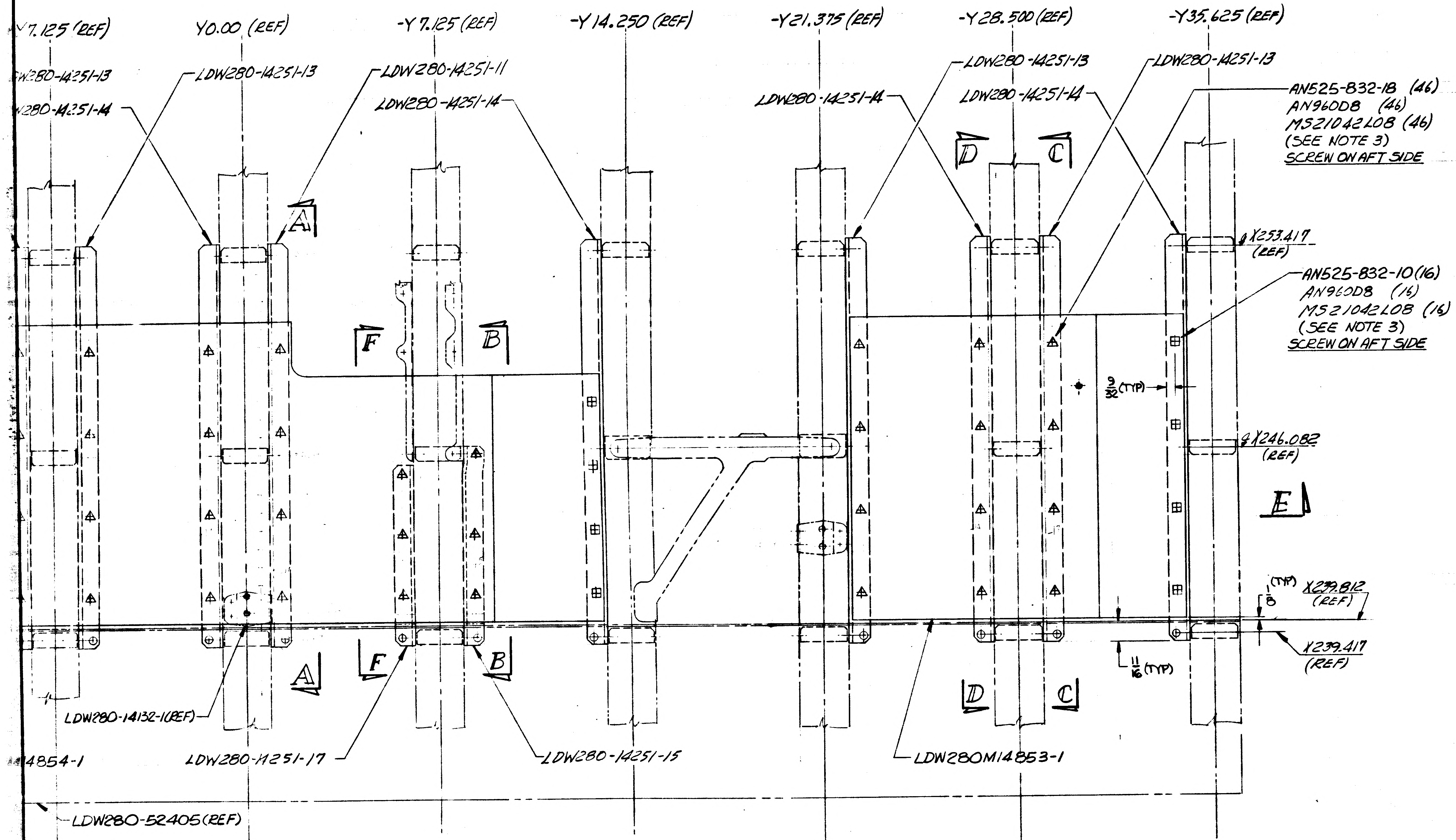
Y7.125 (REF)
Y0.00 (REF)
-Y7.125 (REF)
-Y14.250 (REF)
-Y21.375 (REF)
-Y28.500 (REF)
-Y35.625 (REF)
LDW280-14251-13
LDW280-14251-14
LDW280-14251-11
LDW280-14251-13
LDW280-14251-14
LDW280-14251-14
LDW280-14251-13
LDW280-14251-14
LDW280-14251-13
AN525-832-18 (46)
AN960D8 (46)
MS21042L08 (46)
(SEE NOTE 3)
SCREW ON AFT SIDE
X253.417 (REF)
AN525-832-10 (16)
AN960D8 (16)
MS21042L08 (16)
(SEE NOTE 3)
SCREW ON AFT SIDE
3/32 (TYP)
X246.082 (REF)
E
A
F
B
D
C
1/8 (TYP)
X239.812 (REF)
X239.417 (REF)
11/16 (TYP)
LDW280-14132-1 (REF)
LDW280-14251-17
LDW280-14251-15
LDW280M14853-1
14854-1
LDW280-52405 (REF)

LDW280-52436-1 INSTALLATION
(VIEW LOOKING AFT)

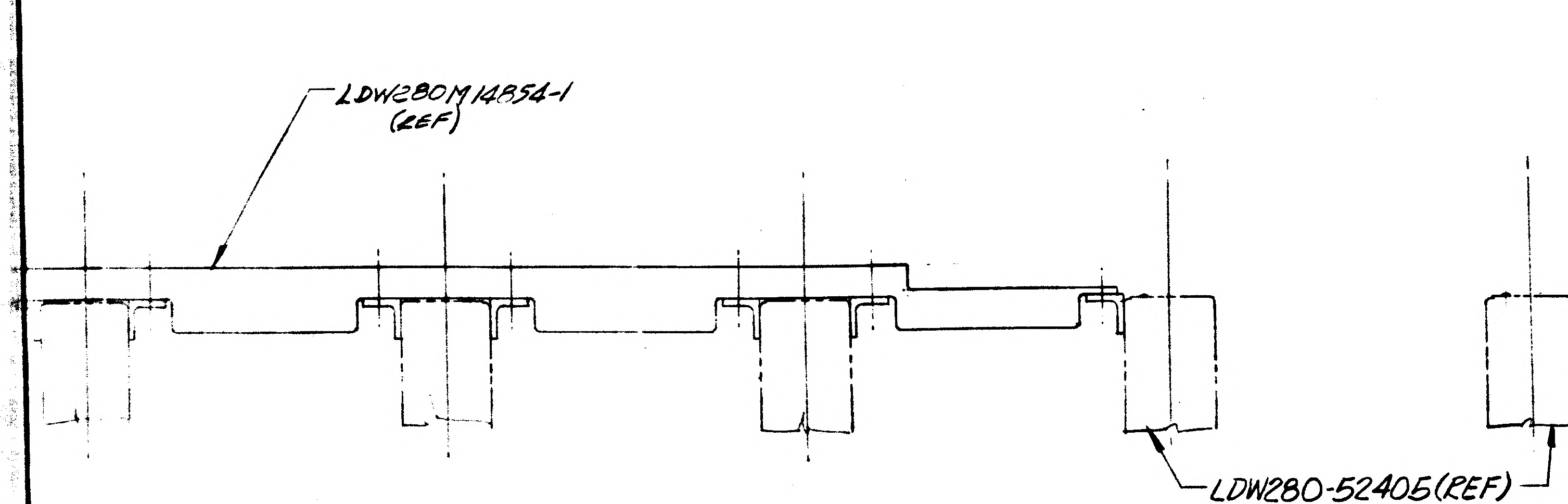
LDW280M14854-1 (REF)
LDW280M14853-1 (REF)
LDW280-52406 (REF)

SECTION E-E

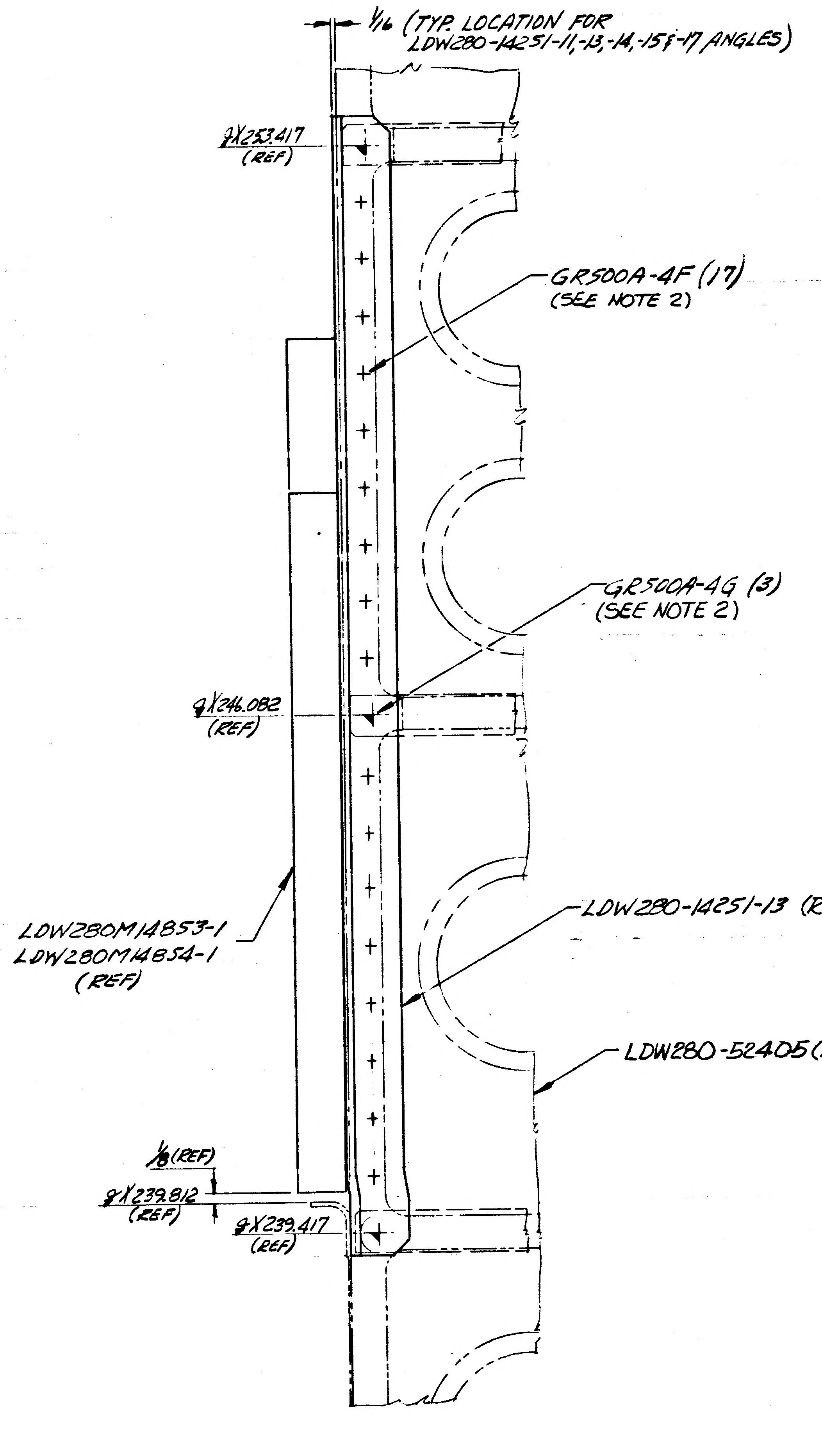
1/16 (TYP. LOCATION FOR LDW280-14251-11, -13, -14, -15 & -17 ANGLES)
X253.417 (REF)
GR500A-4F (17) (SEE NOTE 2)
GR500A-4G (3) (SEE NOTE 2)
X246.082 (REF)
LDW280M14853-1
LDW280M14854-1
(REF)
LDW280-14251-13 (REF)
LDW280-52405 (REF)
1/8 (REF)
X239.812 (REF)
X239.417 (REF)

SECTION C-C SHOWN (TYP. 6 PLACES)

SECTION D-D OPPOSITE (TYP. 7 PLACES)

SCALE: FULL

NOTES
1- ALL PARTS I&T EXEMPT.
2- INSTALL FASTENERS PER LSP-14-15303.
3- FINAL HOLE SIZE FOR GB511J-06 TO BE .1395-.1415
FINAL HOLE SIZE FOR AN525-832 TO BE .165-.171 (DRILL #19)
4- SHIM AS REQD USING MIL-S-22499, COMP I, TYPE I, CLASS II.
5- PRIOR TO INCORPORATION OF -3 & -4 INSTL EQUIP RACK MUST BE EXTERNALLY SUPPORTED TO PREVENT DISTORTION.
6- MINIMUM PERMISSIBLE AVERAGE EDGE DISTANCE IS 1.5 FASTENER DIA FROM FASTENER ℄.
7- + DENOTES EXISTING HOLE LOCATION.

TO BE REDRAWN ON PRODUCTION FORMAT

H-333

03/03 NAS 9-1100

MODEL OR END ITEM	NEXT ASSY	MODULE OR SER NO.	REQD PER MODULE OR END ITEM	MODEL OR END ITEM	NEXT ASSY	MODULE OR SER NO.	REQD PER MODULE OR END ITEM
LEM	LDW280-52401	LEM-2(32)	1 EA	LEM	LDW280-5240-	LEM-2(32)	
PART NO. LDW280-52436-3 & -4		GAEC SCH NO. 33-3		PART NO. LDW280-52436-1 & -5		GAEC SCH NO. 333	

5

UNLESS OTHERWISE SPECIFIED DIMENSIONS ARE IN INCHES. TOLERANCE UNLESS SPECIFIED FRACTIONS - DECIMALS - ANGLES ±1/32 ±.020 ±1/2°	CONTRACT NO. NAS 9-1100		LINE ITEM # I		DOCUMENTATION TYPE I
	DRAWN BY	F.B.	WEIGHTS	Schuck 9-12	GRUMMAN AIRCRAFT ENGRG CORP BETHPAGE, L. I., NEW YORK
	LAYOUT BY	F. BADE 8/22/66			BALLAST INST. ASCENT STAGE-AFT EQUIP BAY EQUIP RACK
	CHECKED BY				
ORIG DWG AUTH	GR LDR				
DETAIL SPEC REQUIREMENT	VDI	9/7			
CLASS II ENGRG CHANGE	STRUCTURES	9/7	PROJ ENGR	R McCabe 9-27	SIZE B · CODE IDENT NO. 26512 · LDW280-52436
CLASS I ENGRG CHANGE	STRUCTURES	9/7	REL GROUP	9-15-66	SCALE 1/2 & NOTED · SHEET 1 OF 1
PRIM NO 215					

LE COOD MP-8-30-6

E 3 7-66

01

NAS 9-1100

GRUMMAN AIRCRAFT ENGINEERING CORP.
CODE IDENT NO. 26512

ENG 32.2 REV 3-65 **LIAISON ENGINEERING #5** **ENGINEERING ORDER**

DWG. NO. LDW280-52436 EO NO. A1
CONTROL INFO NO. LM-5-9132

IN FLD (ON-1)

LDW280-14251-13 (S/B) LDW280-14251-19 @ +Y14.250 (REF)
LDW280-14251-14 (S/B) LDW280-14251-20 @ -Y14.250 (REF)

LDW280-14251-13 (S/B) LDW280-14251-21 @ ±Y28.500 (REF)
LDW280-14251-14 (S/B) LDW280-14251-22 @ ±Y28.500 (REF)

IN B/M (ON-1)
LDW280-14251-13 (6) REQ'D (S/B) (3) REQ'D
" " -14 (7) REQ'D (S/B) (4) REQ'D
" " -19 (1) REQ'D
" " -20 (1) REQ'D
" " -21 (2) REQ'D
LDW280-14251 -22 (2) REQ'D
} ADD

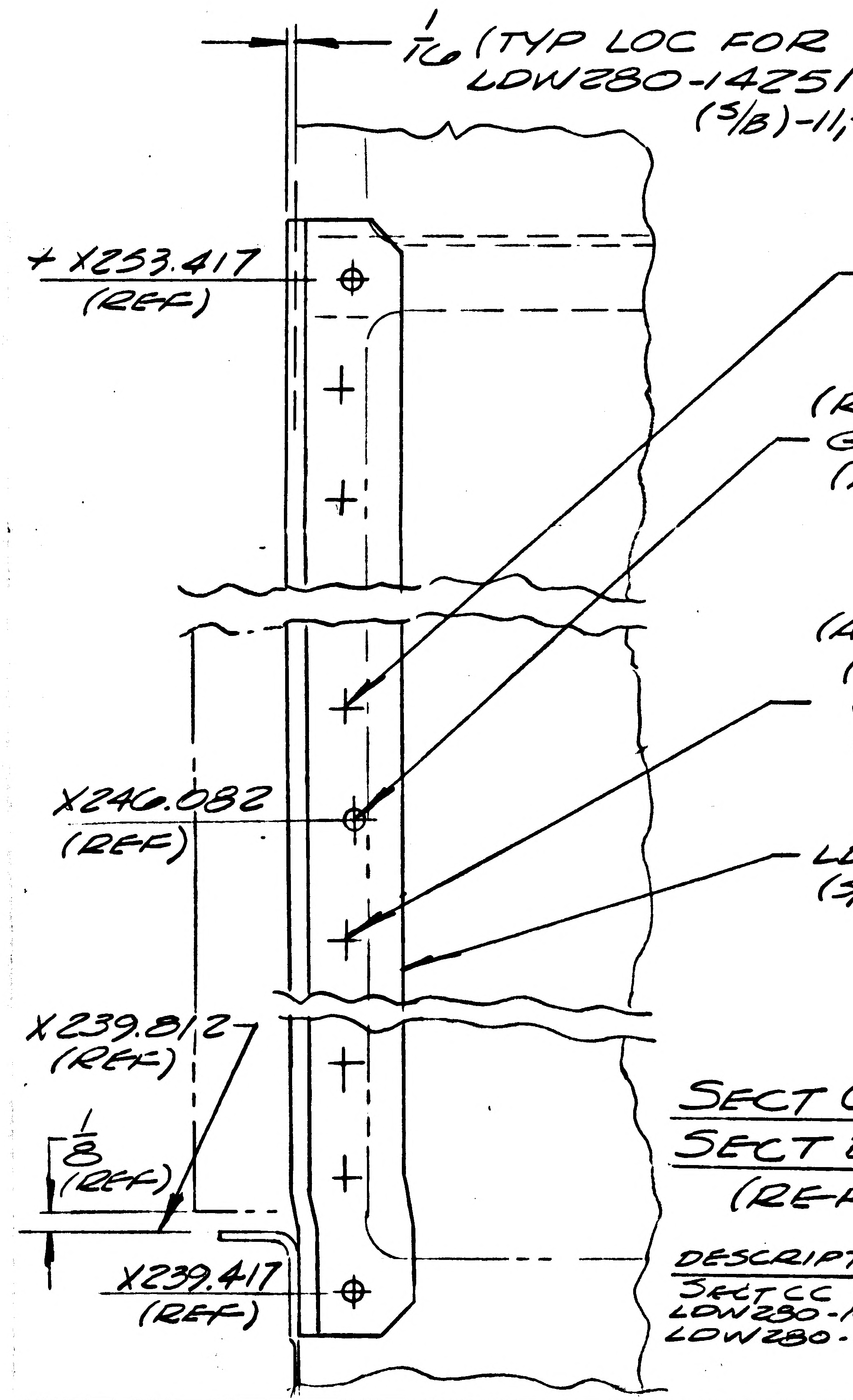

(TYP LOC FOR LDW280-14251-11,-13,-14,-15, & -17 ANGLES)
(S/B)-11,-13,-15,-17,-19,-20,-21 & -22 ANGLES

(FOR LDW280-14251-13 & -21)
GR500A-4F (17)
(S/B) GB511K-08-3 (17)
GN512H-08

(REMOVE)
GR500A-4G
(ADD) GB511K-08-3(3)
GN512H-08
PICK UP EXISTING RIVET LOC.

(ADD)
(FOR LDW280-14251-19)
GR511K08-3 (21)
GN512H-08 (21)
PICK UP EXISTING RIVET LOC.

LDW280-14251-13 (REF)
(S/B) " " -13,-19, & -21 (REF)

SECT C-C (SHOWN) (S/B) SHOWN & NOTED
SECT D-D (OPP)
(REF)

DESCRIPTION OF EO (CONT'D)
SECT CC (SHOWN & NOTED) WAS (SHOWN);
LDW280-14251-19 & -20 (WAS) -13 & -14 @ ±Y14.250
LDW280-14251-21 & -22 (WAS) -13 & -14 @ ±Y28.500 (2 PLCS);

DETAIL SPEC REQ		CL II ENGRG CHG		CL I ENGRG CHG		5

REASON FOR EO: TO FACILIATE INSTL OF PARTS

DESCRIPTION OF EO: IN B/M (ON-1) LDW280-14251-13 & -14, (3) & (4) REQ'D WERE (6) & (7) REQ'D RESP; ADDED LDW280-14251-19, -20, -21, & -22; GB511K-08-3, GN512H-08 (WAS) GR500A-4F & 4G CONT'D ABOVE

GAEC EO RELEASE: R

MODEL	PROCURING ACTIVITY NO.	GAEC UNIT NO.	SUB CONTR UNIT NO.
LM		LM-2(32)	

DRAWING CHANGE REQD		DISPOSITION OF PARTS	
REVISE DWG	RECORD EO	REWORK	SCRAP
✓		✓	

APPROVED BY	7.J.R			—	JF	CH	RMC	
DATE	11-A-66			—	9-20-66	9-20-66	9-20	9-20-66
		SUPPORT	RELIAB. GROUP	GROUP LEADER	STRESS GROUP	LIAISON ENGRG	PROJ ENGRG	~~GOVT~~

PRIORITY	DRAWING TITLE	DRAWING NO.	EO NO.
C	BALLAST INSTL~ASCENT STAGE AFT EQUIP BAY - EQUIPT RACK	LDW280-52436	A1

ISSUED BY LIAISON-MDREYES X6452 SECTION YD11/A.DESPINIS GROUP NO. 335 PL 35

ENG 32.2 REV 3-65 LIAISON ENGINEERING #5

GRUMMAN AIRCRAFT ENGINEERING CORP.
CODE IDENT NO. 26512 *
ENGINEERING ORDER

DWG. NO. LDW280-52436		EO NO. A2	
CONTROL INFO NO. LM-5-9152			

IN FLD & B/M(ON-1)

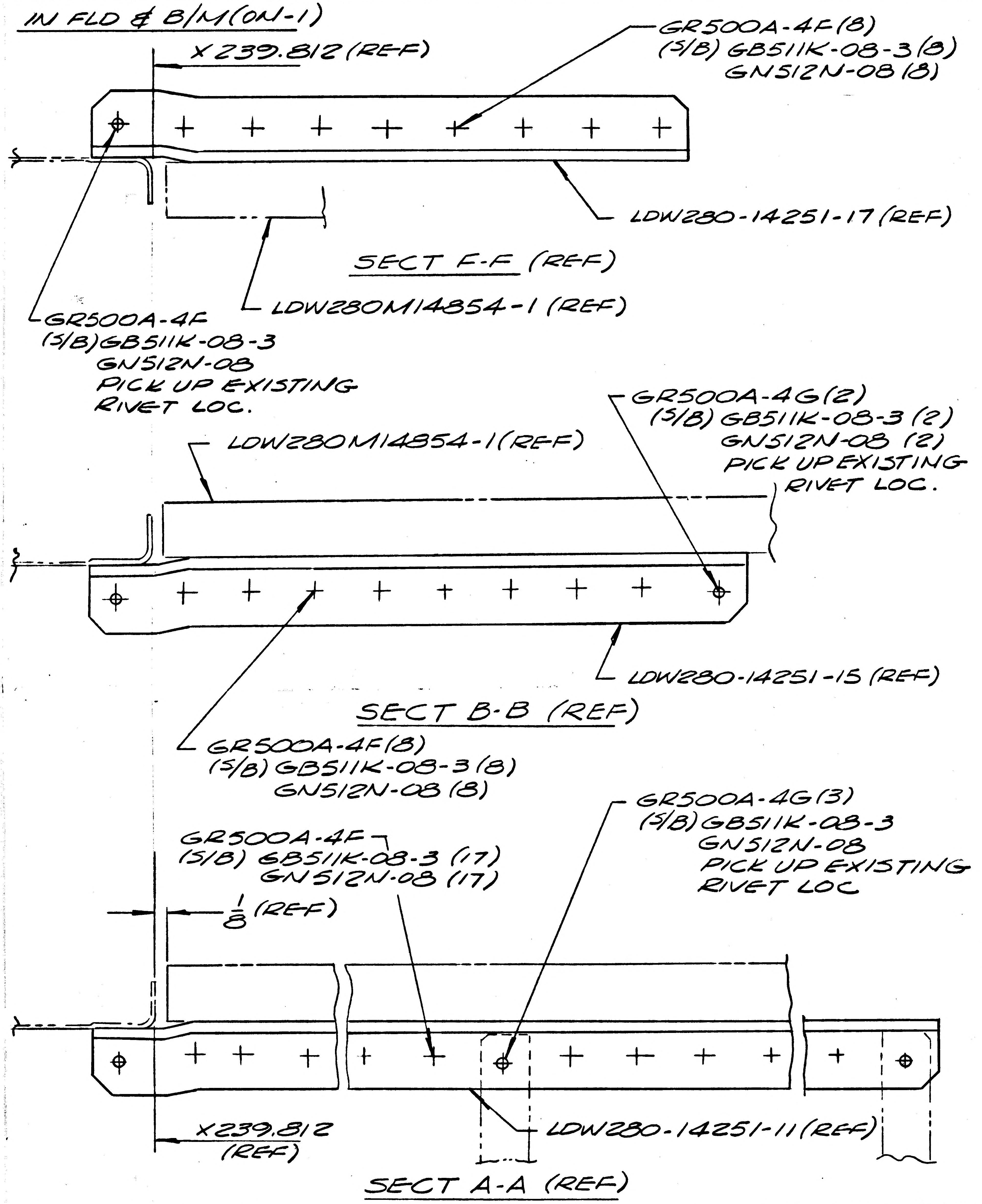
X239.812 (REF)
GR500A-4F(8)
(5/B) GB511K-08-3 (8)
GN512N-08 (8)
LDW280-14251-17 (REF)
SECT F-F (REF)
LDW280M14854-1 (REF)
GR500A-4F
(5/B) GB511K-08-3
GN512N-08
PICK UP EXISTING
RIVET LOC.
GR500A-4G (2)
(5/B) GB511K-08-3 (2)
GN512N-08 (2)
PICK UP EXISTING
RIVET LOC.
LDW280M14854-1 (REF)
LDW280-14251-15 (REF)
SECT B-B (REF)
GR500A-4F (8)
(5/B) GB511K-08-3 (8)
GN512N-08 (8)
GR500A-4G (3)
(5/B) GB511K-08-3
GN512N-08
PICK UP EXISTING
RIVET LOC
GR500A-4F
(5/B) GB511K-08-3 (17)
GN512N-08 (17)
1/8 (REF)
X239.812
(REF)
LDW280-14251-11 (REF)
SECT A-A (REF)

DETAIL SPEC REQ		CL II ENGRG CHG		CL I ENGRG CHG		5

REASON FOR EO
PRODUCTION MAINTAINS IT IS NOT POSSIBLE TO INSTL GR500A RIVETS IN GIVEN AREA.

DESCRIPTION OF EO
IN FLD & B/M (ON-1)
GB511K-08-3 (WAS) GR500A-4F & -4G
GN512N-08 (7 PLCS)

GAEC C EO RELEASE: R

MODEL	EFFECTIVITY: PROCURING ACTIVITY NO.	GAEC UNIT NO.	SUB CONTR UNIT NO.
LM		LM-2(32)	

DRAWING CHANGE REQD: REVISE DWG	RECORD EO	DISPOSITION OF PARTS: REWORK	SCRAP			SUPPORT	RELIAB. GROUP	GROUP LEADER	STRESS GROUP	LIAISON ENGRG	PROJ ENGRG	~~GOVT~~
✓		✓		APPROVED BY	F.N.K			~	J. Gramatkin	CH	RMc (E)	
				DATE	11-10-66			~	9/26/66	9-23-66	9-27	1-26-66
					9/22/66							

PRIORITY: C
DRAWING TITLE: BALLAST INSTL ~ ASCENT STAGE ~ AFT EQUIP BAY ~ EQUIP RACK
DRAWING NO. LDW280-52436
EO NO. A2

ISSUED BY LIAISON - MOREYES X6452 SECTION VD1 / F. DESPINIS GROUP NO. 335 PL 35

01 NAS 9-1100

ENG 32.1 REV 3-65

GRUMMAN AIRCRAFT ENGINEERING CORP.
CODE IDENT NO. 26512

ENGINEERING ORDER

DWG. NO. LDW280-52436
EO NO. A3
CONTROL INFO NO. LDW280-A-0504

ON-4 INSTL: DELETE LDW280-14250-11, -14, LDW280M14003-3(1), & ATTACHING HARDWARE. RESTRICT DETL "G" & VIEW "H-H" TO -3 INSTL ONLY

IN MOD BLOCK FOR -1 & -5: ADD LEM-1(31) EFF, N/A LDW280-51405, ONE EA REQD/MOD

IN MOD BLOCK FOR -3 & -4: ADD LEM-1(31) EFF, N/A LDW280-51401, ONE EA REQD/MOD

3

DETAIL SPEC REQ ☐ CL II ENGRG CHG ☐ CL I ENGRG CHG ☐

REASON FOR EO: UP-DATE DWG REQUIREMENTS

DESCRIPTION OF EO: ON-4 INSTL: REMOVED LDW280-14250-11, -14, LDW280M14003-3(1), & ATTACHING HARDWARE. IN F/D: RESTRICTED DETL "G" & VIEW "H-H" TO -3 INSTL ONLY. IN MOD BLOCK FOR -1, -3, -4, & -5: ADDED LEM-1(31) REQMTS.

GAEC EO RELEASE: 10-3

MODEL	PROCURING ACTIVITY NO.	GAEC UNIT NO.	SUB CONTR UNIT NO.
LEM		LEM-1(31)	
		LEM-2(32)	

DRAWING CHANGE REQD: REVISE DWG ✓ RECORD EO ☐

DISPOSITION OF PARTS: REWORK ✓ SCRAP ☐

	VDI	~~SUPPORT~~	RELIAB. GROUP	GROUP LEADER	STRESS GROUP	LIAISON ENGRG	PROJ ENGRG	~~COST~~
APPROVED BY	F.D.R. ✓	AR			B JV		RMC (E)	AC
DATE	9-19-66	10-5			9/22		9-30	9-29-66

PRIORITY: C

DRAWING TITLE: BALLAST INSTL ~ ASCENT STAGE AFT EQUIP BAY ~ EQUIP RACK

DRAWING NO. LDW280-52436

EO NO. A3

ISSUED BY G. KATZ 9-17-66 x7033 SECTION V. D. I. GROUP NO. 335 PL 35

01

NAS 9-1100

*

GRUMMAN AIRCRAFT ENGINEERING CORP.
CODE IDENT NO. 26512
ENGINEERING ORDER

ENG 32.1 REV 3-65

DWG. NO. LDW280-52436		EO NO. A4
CONTROL INFO NO. LM-5-9433		

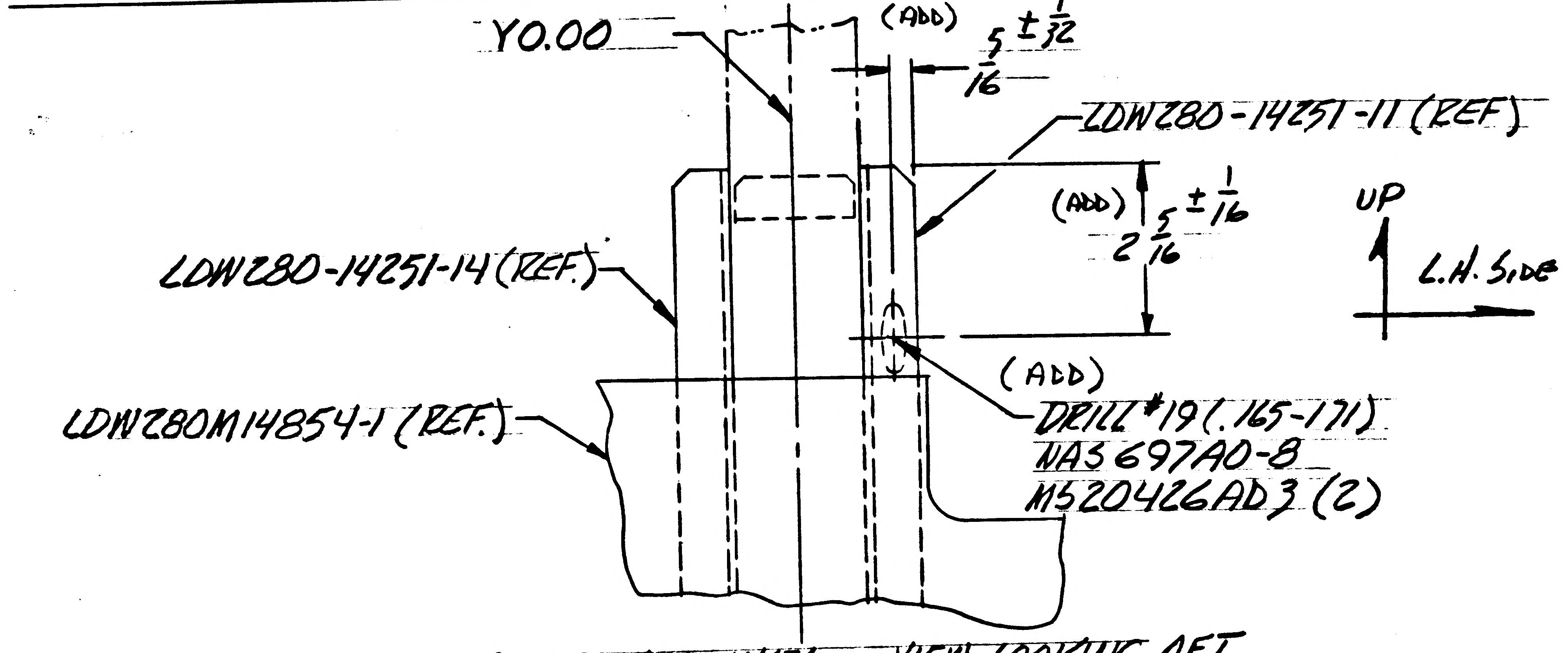

Y0.00
(ADD)
5/16 ± 1/32
LDW280-14251-11 (REF.)
(ADD)
2 5/16 ± 1/16
UP
L.H. SIDE
LDW280-14251-14 (REF.)
(ADD)
DRILL #19 (.165-.171)
NAS 697A0-8
MS20426AD3 (2)
LDW280M14854-1 (REF.)

LDW280-52436-1 INSTL ~ VIEW LOOKING AFT.

5

DETAIL SPEC REQ	☐	CL II ENGRG CHG	☐	CL I ENGRG CHG	☐

REASON FOR EO
To PROVIDE CLAMPING FOR SUPPORT OF INSTRUMENTATION WIRING.

DESCRIPTION OF EO
TO -1, ADDED DRILL #19, NAS 697A0-8 & MS20426AD3(2)

GAEC C EO RELEASE: VE

MODEL	PROCURING ACTIVITY NO.	GAEC UNIT NO.	SUB CONTR UNIT NO.
		LM-2(32)	
LM		LM-1(31)	

DRAWING CHANGE REQD		DISPOSITION OF PARTS	
REVISE DWG	RECORD EO	REWORK	SCRAP
✓		✓	

		SUPPORT	RELIAB. GROUP	GROUP LEADER	STRESS GROUP	LIAISON ENGRG	PROJ ENGRG	GOVT
APPROVED BY	WT			~	JJ	CH		
DATE	10/20/66			~	10/20	10-21	10-24-66	10-22-66
10-19-66	VD1							

PRIORITY: C

DRAWING TITLE: BALLAST INSTL ~ A/S ~ AEB ~ EQUIP RACK

DRAWING NO. LDW280-52436

EO NO. A4

ISSUED BY HARRIGAN/TRAUT. X6454 SECTION VD1 GROUP NO. 335 PL 5

01

NAS 9-1100

ENG 32.1 REV 3-65

GRUMMAN AIRCRAFT ENGINEERING CORP.
CODE IDENT NO. 26512
ENGINEERING ORDER

DWG. NO. LDW280-52436
EO NO. A5
CONTROL INFO NO. LDW280A-2878

IN F/D & MOD. BLOCK CREATE -7 INSTALLATION (1 REQ'D/VEHICLE) N/A LDW280-51405 -7 INSTALLATION (SAME AS -1 EXCEPT LDW280M14853-1 (2) AND THEIR MOUNTING HARDWARE ARE REMOVED)

IN MOD. BLOCK = REMOVE LM 1 (31) EFFECTIVITY FROM -1 & -5 INSTALLATION.

5

DETAIL SPEC REQ		CL II ENGRG CHG		CL I ENGRG CHG		CCA-398, LCR537

REASON FOR EO: ONLY PARTIAL BALLAST REQ'D FOR LM1

DESCRIPTION OF EO: IN F/D & MOD. BLOCK = CREATED -7 INST'L.
IN MOD. BLOCK FOR -1 & -5 INST'L, REMOVED LM1 (31) EFF.

Ⓡ GAEC C EO RELEASE: 10/31

MODEL	EFFECTIVITY		
	PROCURING ACTIVITY NO.	GAEC UNIT NO.	SUB CONTR UNIT NO.
LM		LM 1 (31)	

DRAWING CHANGE REQD		DISPOSITION OF PARTS	
✓		✓	
REVISE DWG	RECORD EO	REWORK	SCRAP

APPROVED BY	F.N.K	Dm			FC		RM (WR)	
DATE	10/31/66	10/31/66			10/31		10.31.66	10.31.66
2	YDI	WTS.	RELIAB. GROUP	GROUP LEADER	STRESS GROUP	LIAISON ENGRG	PROJ ENGRG	~~GOVT~~

PRIORITY: C
DRAWING TITLE: BALLAST INSTALLATION A/S, AEB, EQUIP. RACK
DRAWING NO.: LDW280-52436
EO NO.: A5

ISSUED BY F. BADE X7033 10/31/66 SECTION VEHICLE DESIGN GROUP NO. 335 PL 35

01 NAS 9-1100

B

ENG 32.2 REV 3-65

GRUMMAN AIRCRAFT ENGINEERING CORP.
CODE IDENT NO. 26512
ENGINEERING ORDER

DWG. NO. LDW280-52436		EO NO. B1
CONTROL INFO NO. LDW280A8024		

IN F/D & B/M FOR -1:
ADD LDW280M14856-11(2) & -13(2) PLATES & INSTALLATION HARDWARE.

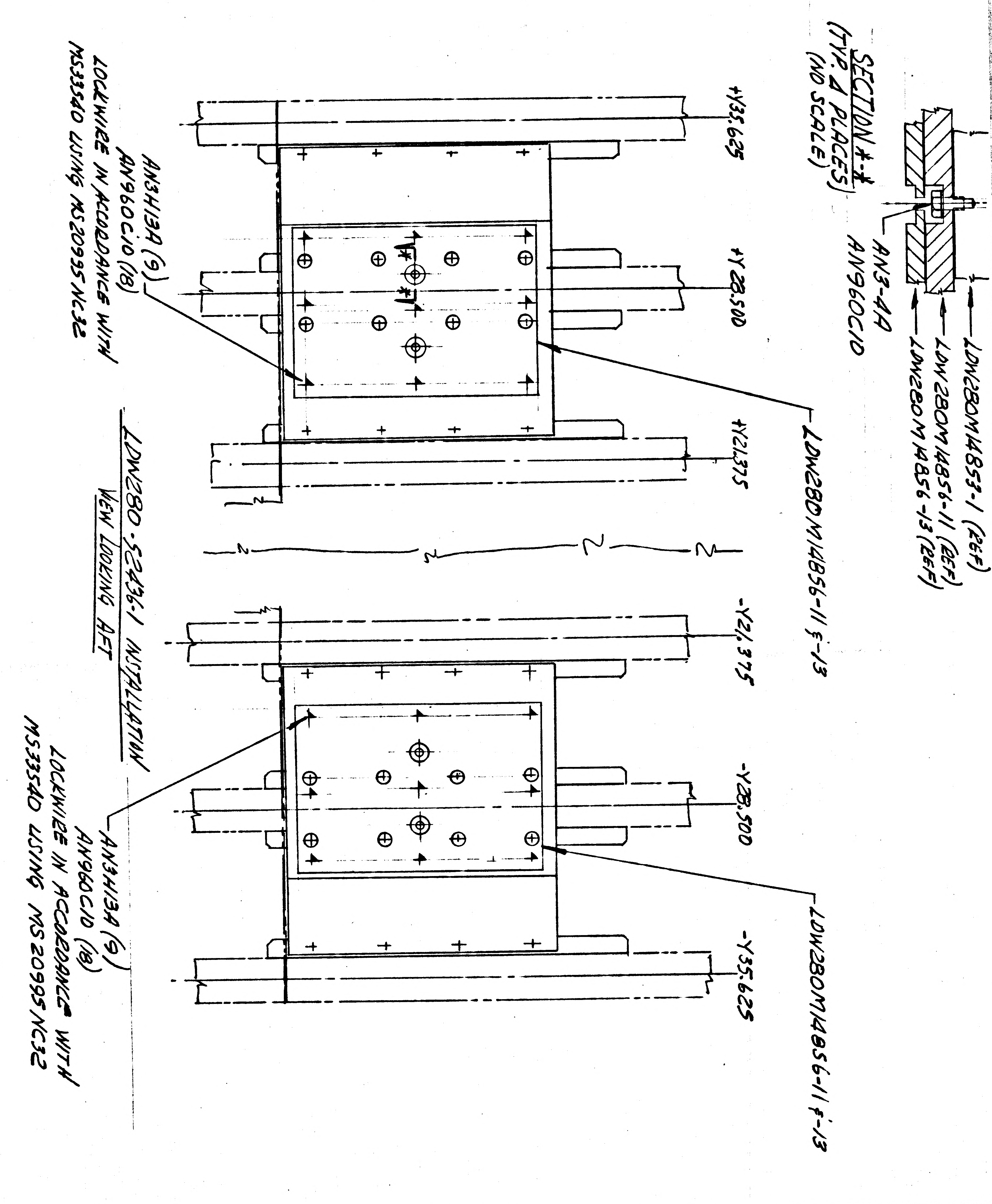

LDW280M14853-1 (REF)
LDW280M14856-11 (REF)
LDW280M14856-13 (REF)
AN3-4A
AN960C10
SECTION A-A
(TYP. 4 PLACES)
(NO SCALE)
LDW280M14856-11 & -13
+Y35.625
+Y28.500
+Y21.375
-Y21.375
-Y28.500
-Y35.625
LDW280M14856-11 & -13
AN3H13A (9)
AN960C10 (18)
LOCKWIRE IN ACCORDANCE WITH
MS33540 USING MS20995 NC32
LDW280-52436-1 INSTALLATION
VIEW LOOKING AFT
AN3H13A (9)
AN960C10 (18)
LOCKWIRE IN ACCORDANCE WITH
MS33540 USING MS20995 NC32

DETAIL SPEC REQ		CL II ENGRG CHG		CL I ENGRG CHG	✓	LCD1831

REASON FOR EO: TO ADD ADDITIONAL BALLAST

DESCRIPTION OF EO: ON-1
ADDED LDW280M14856-11 (2), -13(2) & MS20995
NC32, AN3-4A, AN960C10

GAEC EO RELEASE: Ⓡ JK 8/31/7 C 5

MODEL	PROCURING ACTIVITY NO.	GAEC UNIT NO.	SUB CONTR UNIT NO.
LM		LM-2 (32)	

DRAWING CHANGE REQD	DISPOSITION OF PARTS		
REVISE DWG	RECORD EO	REWORK	SCRAP
✓		-1	

	VDI	SUPPORT	RELIAB. GROUP	GROUP LEADER	STRESS GROUP	LIAISON ENGRG	PROJ ENGRG	~~GOVT~~
APPROVED BY	JAP			—	JV			
DATE	7/24/67			—	7/28		7/26	8-31-67

PRIORITY: C

DRAWING TITLE: BALLAST INSTALLATION - A/S AEB, EQUIP. RACK

DRAWING NO. LDW280-52436

EO NO. B1

7/31
ISSUED BY F. BADE X7033 SECTION VEH. DES. INT. GROUP NO. 335 PL 25

01 NAS 9-1100

ENG 32.1 REV 3-65 B

GRUMMAN AIRCRAFT ENGINEERING CORP.
CODE IDENT NO. 26512 *
ENGINEERING ORDER

DWG. NO. LDW280-52436 EO NO. B2
CONTROL INFO NO. LDW280B0020

THIS EO CANCELS EO B1

DETAIL SPEC REQ	☐	CL II ENGRG CHG	☐	CL I ENGRG CHG	✓	LCD 2223

REASON FOR EO: UNMANNED MISSION. DELETES ADDITIONAL BALLAST.

DESCRIPTION OF EO: THIS EO CANCELS EO B1

GAEC EO RELEASE: JK 10/27

MODEL	EFFECTIVITY: PROCURING ACTIVITY NO.	GAEC UNIT NO.	SUB CONTR UNIT NO.
LM		LM-2(32)	

DRAWING CHANGE REQD: REVISE DWG ✓ RECORD EO

DISPOSITION OF PARTS: REWORK ✓ SCRAP

	VDI	SUPPORT	RELIAB. GROUP	GROUP LEADER	STRESS GROUP	LIAISON ENGRG	PROJ ENGRG	~~CONT~~
APPROVED BY	JRS			JDK	JaB			
DATE	10/25/67			10-25-67	10-25-67		10/26/67	10-27-67
R								

PRIORITY: C

DRAWING TITLE: BALLAST INSTL - A/S, AEB, EQUIPMENT RACK

DRAWING NO. LDW280-52436 EO NO. B2

ISSUED BY F. BADE V7033 SECTION VEH. DES. INT. GROUP NO. 335 PL 25

01

NAS 9-1100

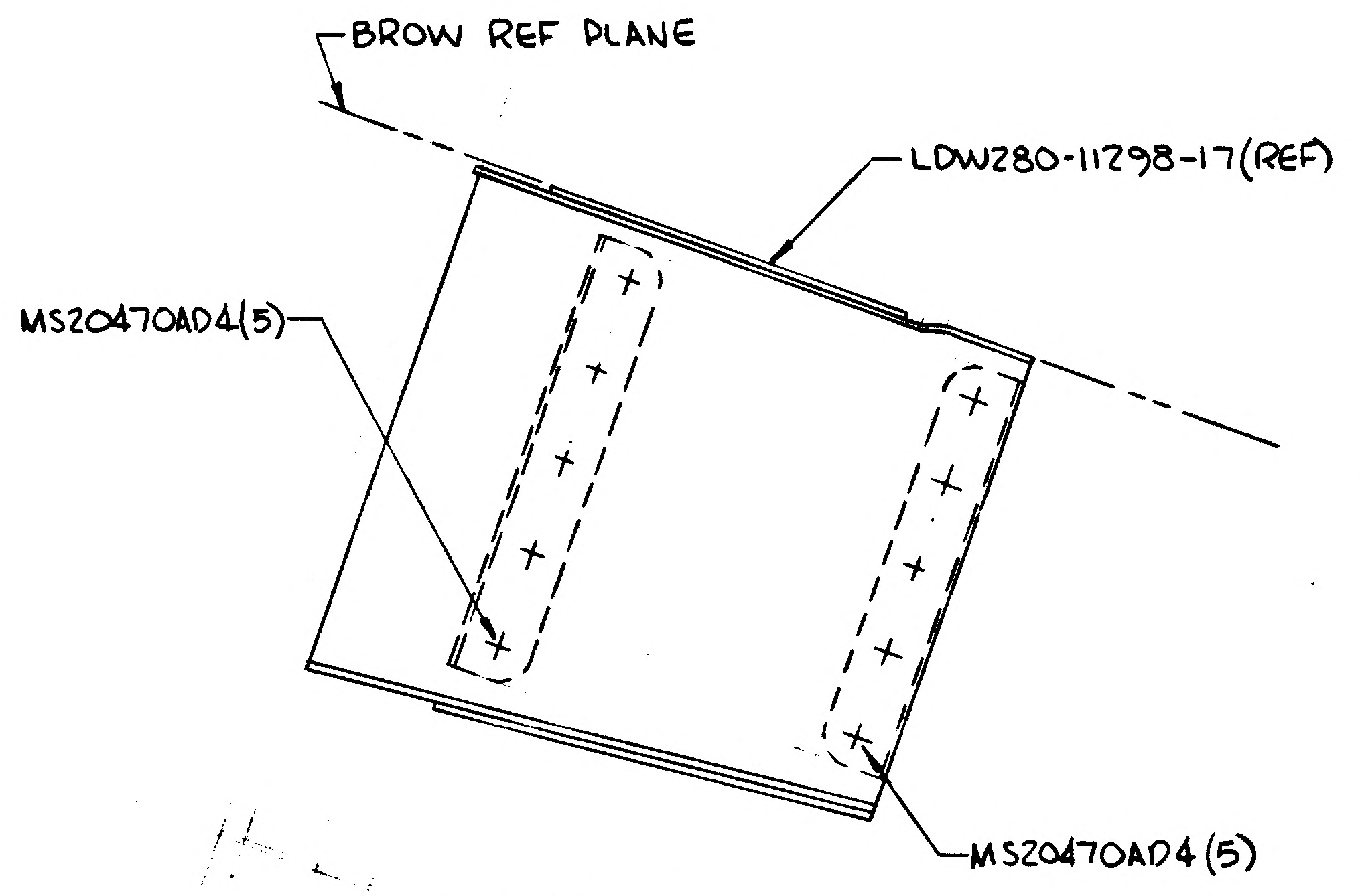
BROW REF PLANE
LDW280-11298-17(REF)
MS20470AD4(5)
MS20470AD4(5)

SECTION E-E

01/03 NAS 9-1100

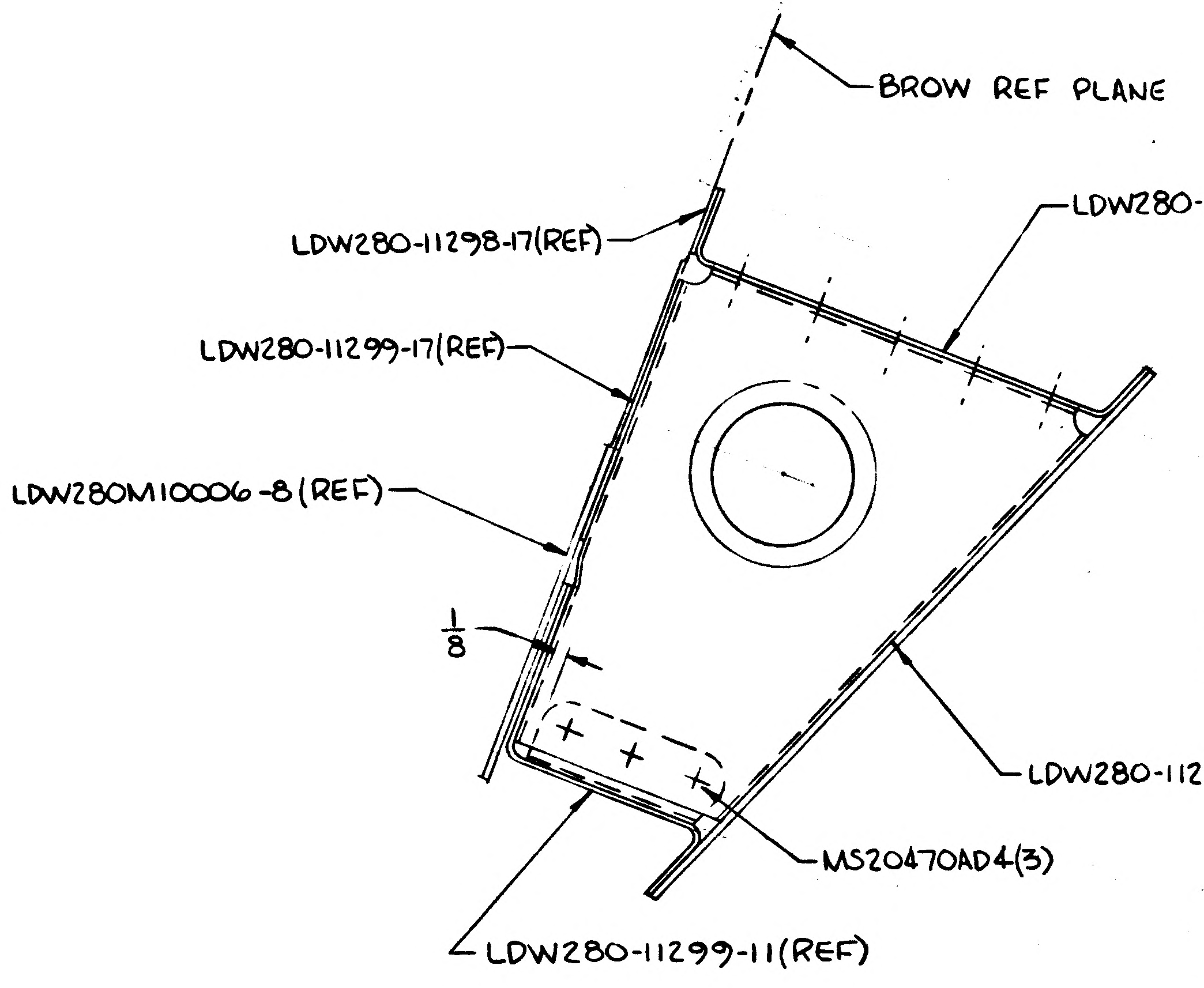
BROW REF PLANE
LDW280-11298-17(REF)
LDW280-11298-13(REF)
LDW280-11299-17(REF)
LDW280M10006-8(REF)
1/8
LDW280-11298-15
MS20470AD4(3)
LDW280-11299-11(REF)

SECTION C-C

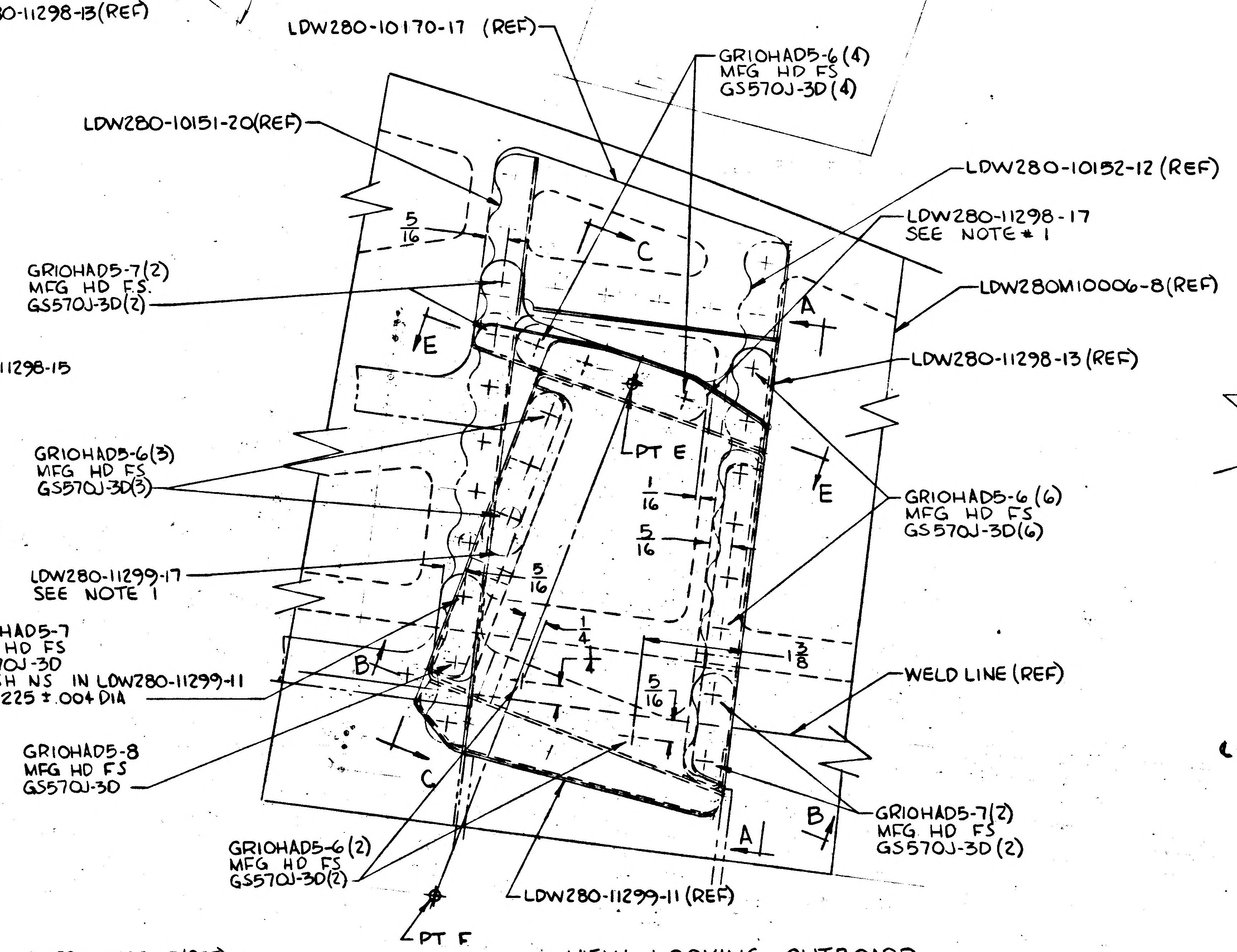
LDW280-10170-17 (REF)
GR10HAD5-6(4)
MFG HD FS
GS570J-3D(4)
LDW280-10151-20(REF)
LDW280-10152-12 (REF)
LDW280-11298-17
SEE NOTE * 1
LDW280M10006-8(REF)
LDW280-11298-13 (REF)
5/16
C
GR10HAD5-7(2)
MFG HD FS.
GS570J-3D(2)
A
E
PT E
E
GR10HAD5-6(3)
MFG HD FS
GS570J-3D(3)
1/16
5/16
GR10HAD5-6 (6)
MFG HD FS
GS570J-3D(6)
LDW280-11299-17
SEE NOTE 1
5/16
GR10HAD5-7
MFG HD FS
GS570J-3D
FLUSH NS IN LDW280-11299-11
CSK .225 ± .004 DIA
1/4
1 3/8
WELD LINE (REF)
B
5/16
GR10HAD5-8
MFG HD FS
GS570J-3D
C
B
A
GR10HAD5-7(2)
MFG HD FS
GS570J-3D (2)
GR10HAD5-6(2)
MFG HD FS
GS570J-3D(2)
LDW280-11299-11 (REF)
PT F

VIEW LOOKING OUTBOARD
NORMAL TO BROW REF PLANE
RH SIDE ONLY

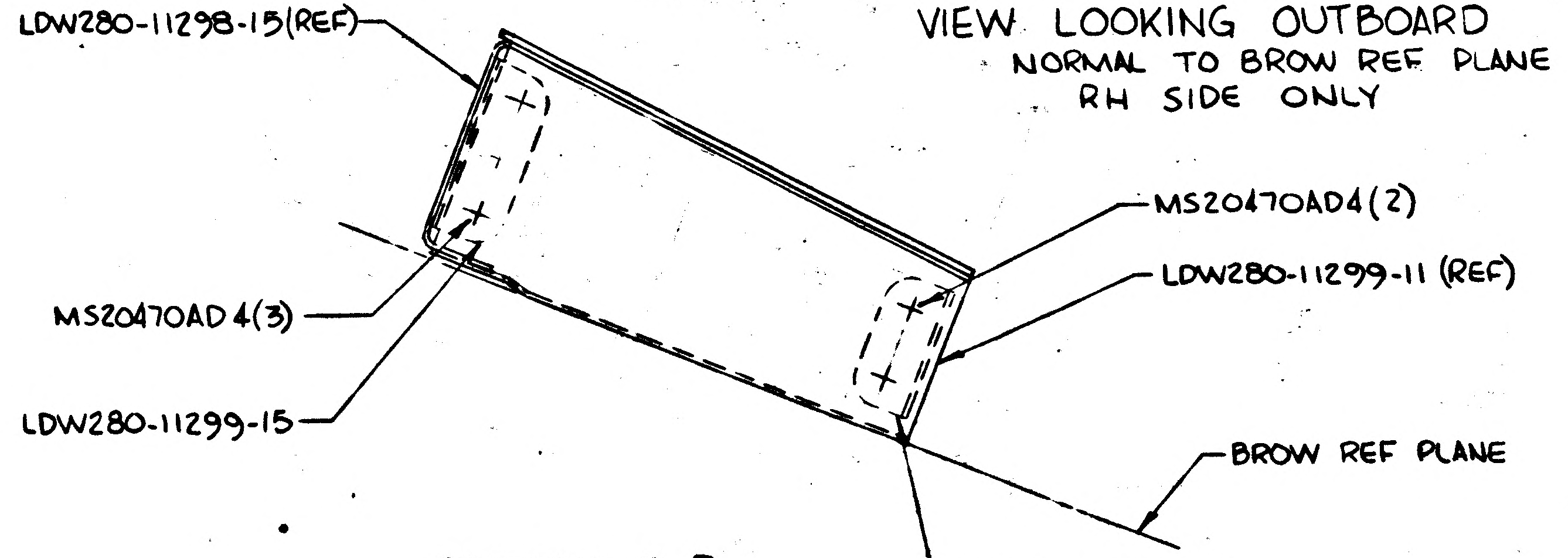
LDW280-11298-15(REF)
MS20470AD4(2)
LDW280-11299-11 (REF)
MS20470AD4(3)
LDW280-11299-15
BROW REF PLANE
LDW280-11299-13

SECTION B-B

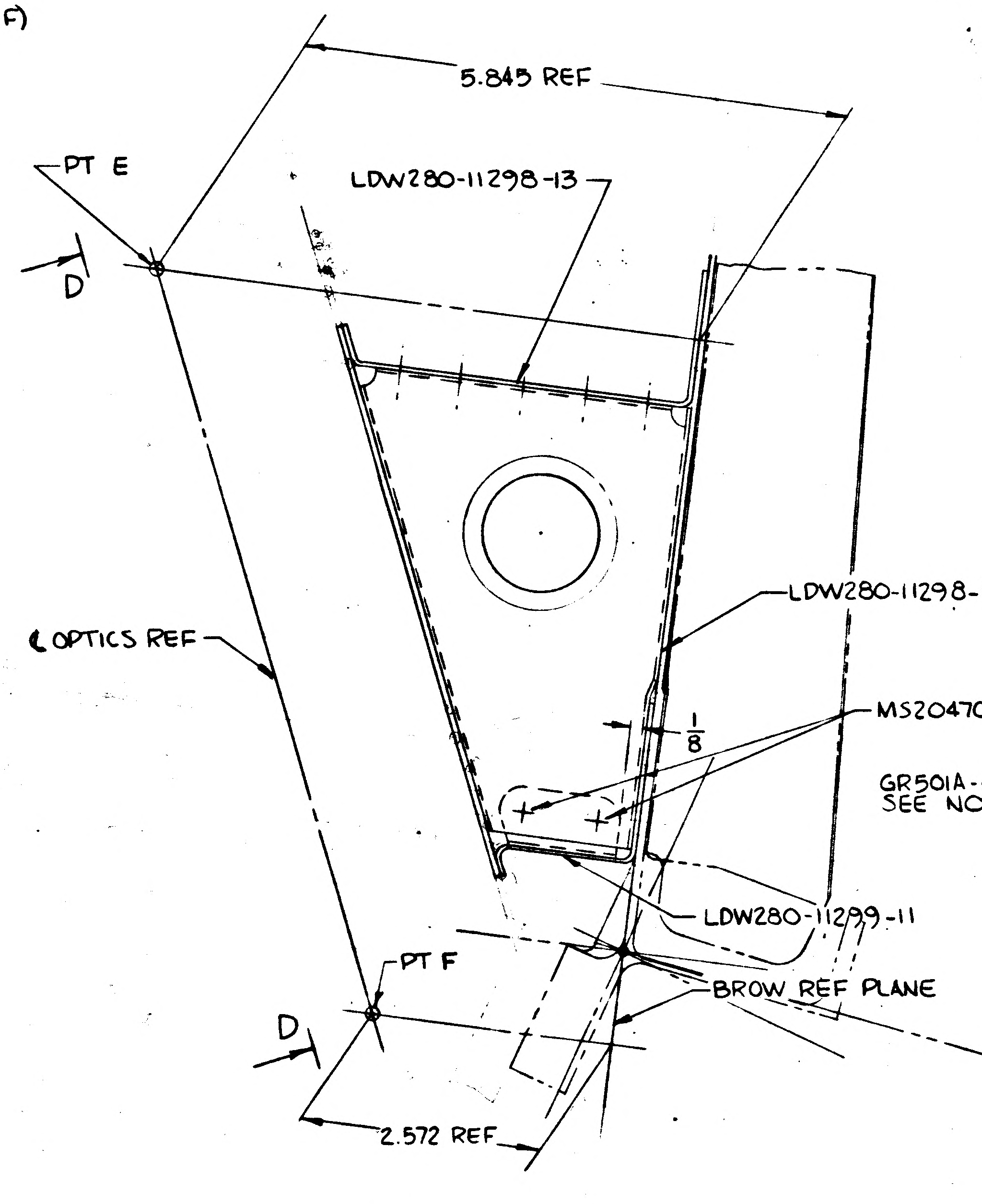
PT E
D
5.845 REF
LDW280-11298-13
℄ OPTICS REF
LDW280-11298-11
MS20470AD4 (2)
1/8
LDW280-11299-11
PT F
BROW REF PLANE
D
2.572 REF

SECTION A-A

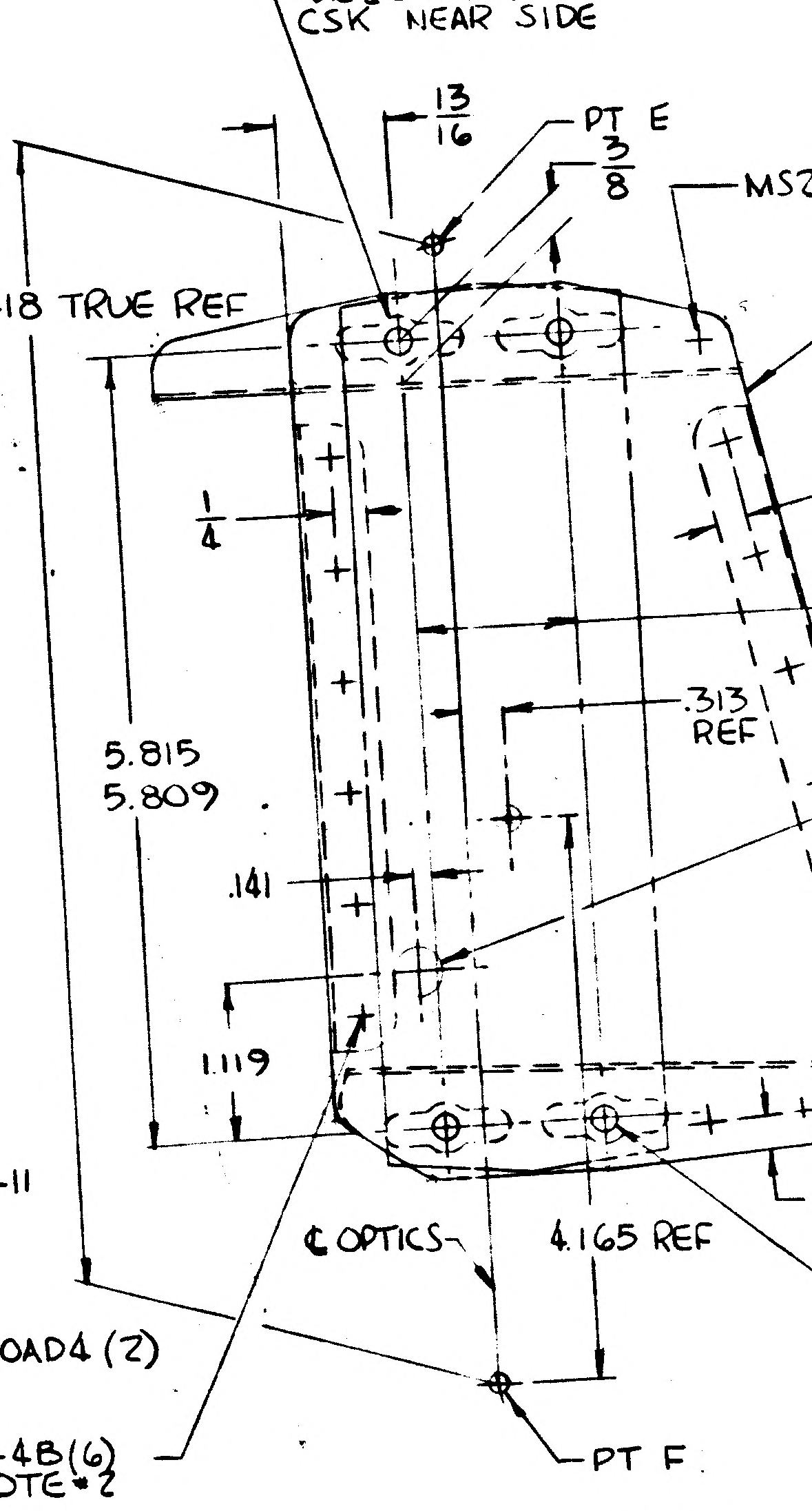
NAS680A3 (4)
MS20426AD3
CSK NEAR SIDE
13/16
PT E
3/8
MS2
8.418 TRUE REF
1/4
5.815
5.809
.313
REF
.141
1.119
℄ OPTICS
4.165 REF
PT F
GR501A-4B(6)
SEE NOTE * 2

VIEW D-D

P
E
F

3/3

NO.	FINISHES	GRUMMAN STD SPEC	MILITARY SPEC NO.	SYM	PROCESSES	GRUMMAN STD SPEC
2	CADMIUM PLATE	G. S. S.			AL HEAT TREAT	
10	ZINC CHROMATE PRIMER	G. S. S.			MAGNAFLUX	
15	TINTED PRIMER: 1 COAT	G. S. S.			PENETRANT INSPECTION (ZYGLO)	
76	ALODINE	G. S. S.			THREADING	
88	ANODIZE	G. S. S.			STEEL HEAT TREAT PSI ROCKWELL C TO C	

NOTES

1. CLEAN IN ACCORDANCE WITH LSP14-7022, THEN BOND IN ACCORDANCE WITH LSP-22500 USING EPON #934 ADHESIVE CURE RANGE I OR CURE RANGE II
2. INSTALL GR500A & GR501A TYPE FASTENERS PER LSP14-15303
3. FOR HOLES MARKED ▲ SEE DWG LDW280M10586 FOR CORRESPONDING HOLE PATTERN.
4. "O"-RING MAT'L IS COMPOUND S-418-6 SILICONE

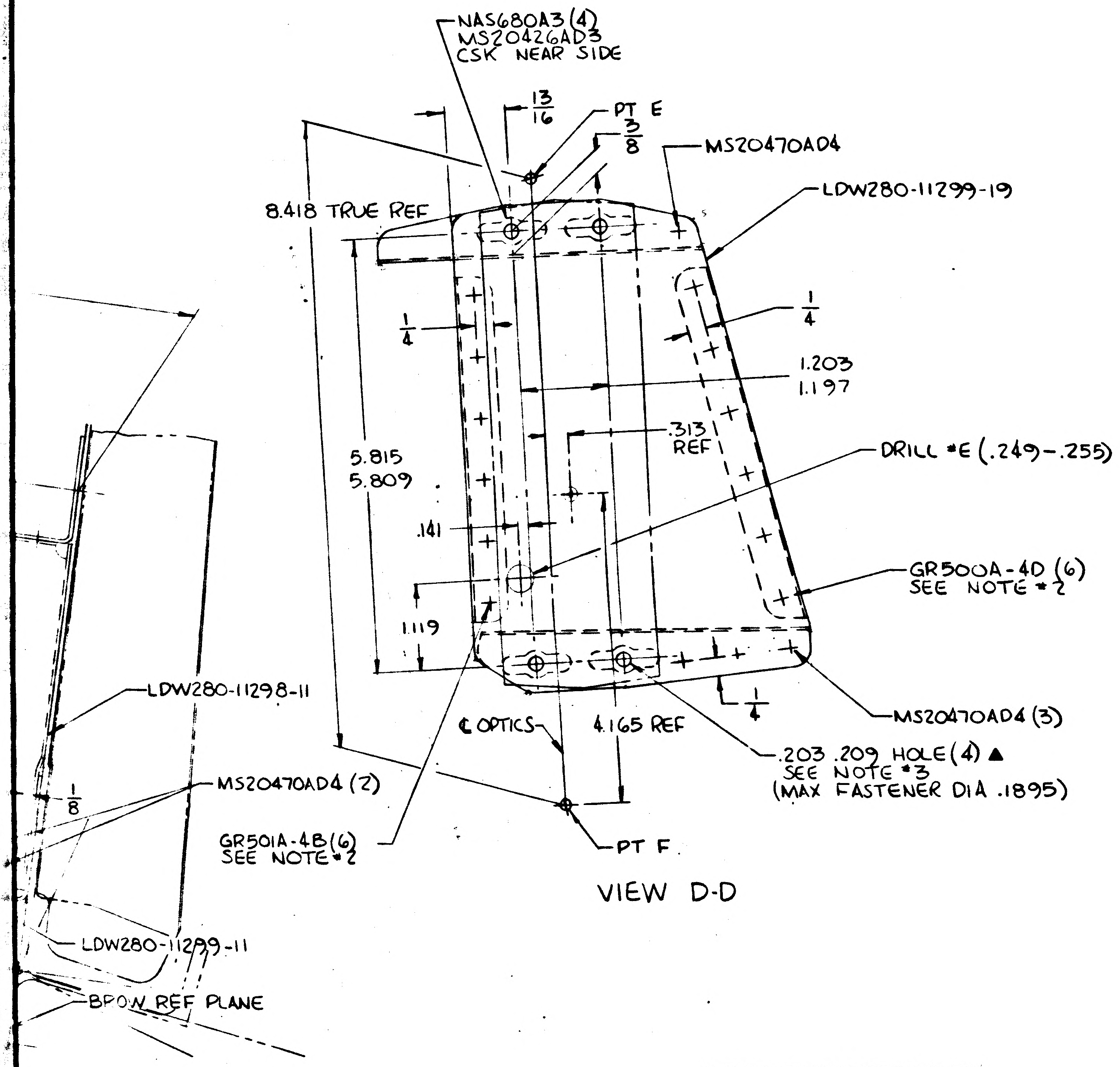
NAS680A3 (4)
MS20426AD3
CSK NEAR SIDE
13/16
PT E
3/8
MS20470AD4
LDW280-11299-19
8.418 TRUE REF
1/4
1/4
1.203
1.197
.313 REF
DRILL #E (.249-.255)
5.815
5.809
.141
1.119
GR500A-4D (6)
SEE NOTE #2
1/4
MS20470AD4 (3)
℄ OPTICS
4.165 REF
.203 .209 HOLE (4) ▲
SEE NOTE #3
(MAX FASTENER DIA .1895)
PT F
LDW280-11298-11
1/8
MS20470AD4 (2)
GR501A-4B (6)
SEE NOTE #2
LDW280-11299-11
BPOW REF PLANE

VIEW D-D

COORDINATES			
PT	X	Y	Z
E	289.53	17.340	64450
F	282.30	17.940	68.720

02/03

NAS 9-1100

QTY REQD PER ASSY			PART OR IDENTIFYING NO.	CODE IDENT	NOMENCLATURE OR DESCRIPTION	MATERIAL	GOVT SPEC
		4	NAS680A3	E	PLATE NUT	STD PART	
			MS20470AD4		RIVET	STD PART	
			MS20426AD3		RIVET	STD PART	
		21	GS570J-3D		O-RING	STD PART	
		6	GR501A-4B		RIVET	GRUMMAN STD	
		6	GR500A-4D				
		1	GR10HAD5-8				
		5	GR10HAD5-7				
		13	GR10HAD5-6		RIVET	GRUMMAN STD	
		1	LDW280-11299-19		PLATE		
		1	LDW280-11299-17		DOUBLER		
		1	LDW280-11299-15		ANGLE		
		1	LDW280-11299-13		ANGLE		
		1	LDW280-11299-11		BRACKET		
			LDW280-11298-17		DOUBLER		
		1	LDW280-11298-15		BRACKET		
		1	LDW280-11298-13		BRACKET		
		1	LDW280-11298-11		BRACKET		
			LDW280-52475-1	E	BRACKET INSTL.		
		-1					

MODEL	NEXT ASSY	MILITARY NUMBER	APL NO.	REQD PER APL	MODEL
					LEM

PART NUMBER

GRUMMAN SCH INFO

PART NUMBER LDW

NO.	FINISHES	GRUMMAN STD SPEC	MILITARY SPEC NO.
2	CADMIUM PLATE	G. S. S.	
10	ZINC CHROMATE PRIMER	G. S. S.	
15	TINTED PRIMER: 1 COAT	G. S. S.	
76	ALODINE	G. S. S.	
88	ANODIZE	G. S. S.	

SYM	PROCESSES	GRUMMAN STD SPEC	MILITARY SPEC NO.
	AL HEAT TREAT		MIL-H-6088
	MAGNAFLUX		MIL-I-6868
	PENETRANT INSPECTION (ZYGLO)		MIL-I-6866
	THREADING		MIL-S-7742
	STEEL HEAT TREAT PSI ROCKWELL C TO C		

RECORD DRAWINGS AND E.O.'S

MODEL	RECORD DWG NO.	E. O. NO.	MILITARY NO.	APL NO.

REVISIONS

REVISION LETTER	ITEM NO.	ZONE	AUTHORITY FOR REVISION: GRUMMAN INFO ONLY / DCRF OR ECP	CLASS II	CLASS I	DET SPEC REQ	ENGRG ORDER IBCC NO.	DESCRIPTION	REVISED BY AND DATE	EFFECTIVE ON MILITARY NUMBER	DISPOSITION OF EXIST PARTS: RE-WORK	SCRAP	ENGRG APPD	GOVT APPD

DWG. SIZE 34 X

QTY REQD PER ASSY	-1	PART OR IDENTIFYING NO.	CODE IDENT	NOMENCLATURE OR DESCRIPTION	MATERIAL	GOVT SPEC	COML SPEC	STOCK SIZE (EA)	PROCESS SYMBOL	FINISH NO.	UNIT WT	ZONE
	4	NAS680A3	E	PLATE NUT	STD PART							
		MS20470AD4		RIVET	STD PART							
		MS20426AD3		RIVET	STD PART							
	21	GS570J-3D		O-RING	STD PART							
	6	GR501A-4B		RIVET	GRUMMAN STD							
	6	GR500A-4D										
	1	GR10HAD5-8										
	5	GR10HAD5-7										
	15	GR10HAD5-6		RIVET	GRUMMAN STD							
	1	LDW280-11299-19		PLATE								
	1	LDW280-11299-17		DOUBLER								
	1	LDW280-11299-15		ANGLE								
	1	LDW280-11299-13		ANGLE								
	1	LDW280-11299-11		BRACKET								
		LDW280-11298-17		DOUBLER								
	1	LDW280-11298-15		BRACKET								
	1	LDW280-11298-13		BRACKET								
	1	LDW280-11298-11		BRACKET								
		LDW280-52475-1	E	BRACKET INSTL.								

MODEL	NEXT ASSY	MILITARY NUMBER	APL NO.	REQD PER APL	MODEL	NEXT ASSY	MODULE NUMBER		REQD PER APL
					LEM	LDW280-52075	LEM -2(32)		1 EA

PART NUMBER | GRUMMAN SCH INFO

PART NUMBER LDW280-52475-1 | GRUMMAN SCH INFO 31-3

LENGTHS OF AN, NAS & MS AL ALY RIVETS SHORTER THAN 1 INCH ARE NOT SPECIFIED.	✓
ALL DIMENSIONS SHOWN TO BE MET AFTER CADMIUM PLATING. THICKNESS OF PLATE .0003 MIN TO .0005 MAX. MIN THICKNESS TO BE .0002 ON THREADED AREAS. NO ALLOWANCE FOR PLATING IN HOLES EXCEPT AS NOTED.	
REMOVE ALL BURRS. BREAK ALL EDGES .015-.031 EXCEPT AS NOTED.	
125√ SURFACE ROUGHNESS INCLUDING REAMED HOLES PER MIL-STD-10 EXCEPT AS NOTED.	
200√ FOR ALL DRILLED HOLES UNLESS OTHERWISE SPECIFIED.	
HOLES MUST BE KEPT FREE OF CHROME PLATING SOLUTION.	
PART NUMBER AND ALL OTHER MARKINGS IN REGION MARKED ⊠ USE BOTH SIDES IF NECESSARY.	
FILLET AND INSIDE CORNER RADII TOLERANCES .016R TO .062R ± .010 .063R TO .250R ± .015 OVER .250R ± .030	
DEPTH SHOWN FOR TAPPED HOLES IS FULL THDS. 2-3 IMP THDS BEYOND PERMISSIBLE.	
EXTERNAL THREAD LENGTH SHOWN INCLUDES 2 IMPERFECT THREADS MAX.	
DO NOT CADMIUM PLATE & PAINT HOLES OR SURFACES MARKED WITH DOUBLE ASTERISK.	
MISMATCH STEP OF ± .005 PERMISSIBLE DUE TO CHANGE OF CUTTERS AT INSIDE INTERSECTING SURFACES.	
DIAMETERS MARKED MUST BE CONCENTRIC WITHIN FULL INDICATOR READING	
INSPECTION INFORMATION MINIMUM PERMISSIBLE ~~AVERAGE~~ EDGE DISTANCE ~~[illegible]~~ IS 1.5 FASTENER DIA FROM ℄ FASTENER	✓
SYMBOL ∱ DENOTES SURFACE TO BE MACHINED	
UNLESS OTHERWISE SPECIFIED TOLERANCE ON FLANGES IS ± 1/32	
NOTES CHECKED √ APPLY TO THIS DWG.	

MANUFACTURING OPERATIONS

03/03 NAS 9-1100

TO BE REDRAWN ON PRODUCTION FORMAT

LDW280-52475

5

UNLESS OTHERWISE SPECIFIED DIMENSIONS ARE IN INCHES. TOLERANCE UNLESS SPECIFIED: FRACTIONS - DECIMALS - ANGLES ± 1/32 ± .020 ± 1/2°	
ORIG DWG AUTH	
DETAIL SPEC REQUIREMENT	
CLASS II ENGRG CHANGE	
CLASS I ENGRG CHANGE	
GRUMMAN REL INFO	
PRIM # VE(001) 6-24-6X	
215 MP	

DRAWN BY	
LAYOUT BY	JOE CALANDRA 6-15
CHECKED BY	
GR LEADER	C. Pasetene 6/15/66
~~STRUCTURE~~	[illegible]
STRUCTURE	[illegible]
WEIGHTS	[illegible] 6-27
PROJ ENGR	Plunkett 28 Jun 66
~~GOVT~~ APPD	[illegible] 6-30-66

GRUMMAN AIRCRAFT ENGRG CORP
BETHPAGE, L. I., N. Y.

BRACKET INSTL A/S CABIN
SEQUENCE CAMERA SUPPORT

CONTRACT NO. NAS 9-1100 DOCUMENTATION TYPE II

CODE IDENT NO.	SIZE	
26512	J	LDW280-52475

SCALE FULL | LINE ITEM #1 | SHEET 1

ENG 37 REV 65

GRUMMAN AIRCRAFT ENGINEERING CORP.
CODE IDENT NO. 26512
ENGINEERING ORDER

DWG. NO LDW280-52475
EO NO. A1
CONTROL INFO NO. LEM-5-7652

ON -1 INSTL.-
LDW280-11298-19 WAS LDW280-11298-13
(NO PICTURE CHANGE REQD.)

DETAIL SPEC REQ		CL II ENGRG CHG		CL I ENGRG CHG	

REASON FOR EO: DETAIL PART DRAWN INCORRECTLY

DESCRIPTION OF EO: ON -1, LDW280-11298-19 WAS LDW280-11298-13

MODEL	EFFECTIVITY: PROCURING ACTIVITY NO.	GAEC UNIT NO.	SUB CONTR UNIT NO.
LEM		LEM-2(32)	

DRAWING CHANGE REQD: REVISE DWG	RECORD EO	DISPOSITION OF PARTS: REWORK	SCRAP
✓		✓	

APPROVED BY	JAT			—	J.B.	CH	EJ
DATE	7/12/66			—	7/11	7-11-66	7-11-66
7-8-66	VD1	SUPPORT	RELIAB. GROUP	GROUP LEADER	STRESS GROUP	LIAISON ENGRG	PROJ ENGRG

~~GOVT~~

GAEC EO RELEASE: FS 7-22-6 4.3

PRIORITY: C

DRAWING TITLE: BRACKET INSTL. A/S CABIN SEQUENCE CAMERA SUPPORT

DRAWING NO. LDW280-52475

EO NO. A1

ISSUED BY FRED STEINMETZ X6505 SECTION VD1-POSATERI GROUP NO. 335 PL 35

ENG 22.1 REV 3-66 LIAISON ENGINEERING #5

GRUMMAN AIRCRAFT ENGINEERING CORP.
CODE IDENT NO. 26512
ENGINEERING ORDER

DWG. NO. LDW280-52475 EO NO. A2
CONTROL INFO NO. LEM-5-7802

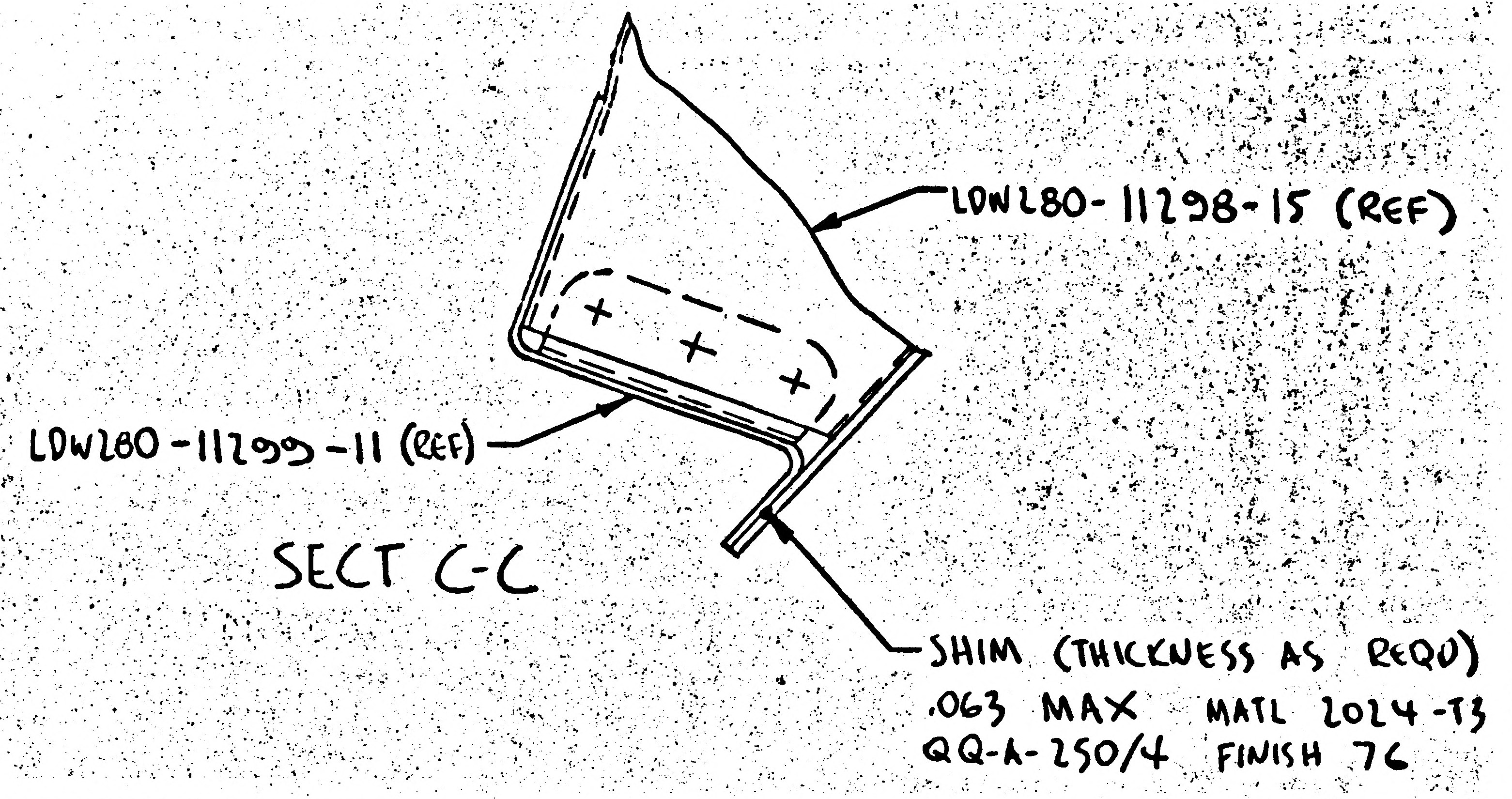
LDW280-11298-15 (REF)
LDW280-11299-11 (REF)
SECT C-C
SHIM (THICKNESS AS REQU)
.063 MAX MATL 2024-T3
QQ-A-250/4 FINISH 76

DETAIL SPEC REQ	☐	CL II ENGRG CHG	☐	CL I ENGRG CHG	☐

REASON FOR EO: TO ALLOW FOR TOLERANCE BUILDUP

DESCRIPTION OF EO: IN FLD FOR -1 ADDED SHIM

GAEC C EO RELEASE: FR

MODEL	EFFECTIVITY: PROCURING ACTIVITY NO.	GAEC UNIT NO.	SUB CONTR UNIT NO.
LEM		LEM-2 (32)	

DRAWING CHANGE REQD: ✓ REVISE DWG; RECORD EO
DISPOSITION OF PARTS: ✓ REWORK; SCRAP

APPROVED BY									
DATE	7-26-66	8/3/66	8/9/66		—		7-25-66	8-7	7-26-66
		VDI	WTS	RELIAB. GROUP	GROUP LEADER	STRESS GROUP	LIAISON ENGRG	PROJ ENGRG	

PRIORITY: C
DRAWING TITLE: BKT INSTL - A/S - CABIN - SEQUENCE CAMERA SUPT
DRAWING NO. LDW280-52475
EO NO. A2

ISSUED BY LIAISON - R.F. HUBER SECTION VDI GROUP NO. ____ PL 35

GRUMMAN AIRCRAFT ENGINEERING CORP.
CODE IDENT NO. 26512
ENG 32.1 REV 3-66 LIAISON ENGINEERING #5 **ENGINEERING ORDER**

DWG. NO. LDW280-52475 EO NO. A3
CONTROL INFO NO. LEM-5-9032

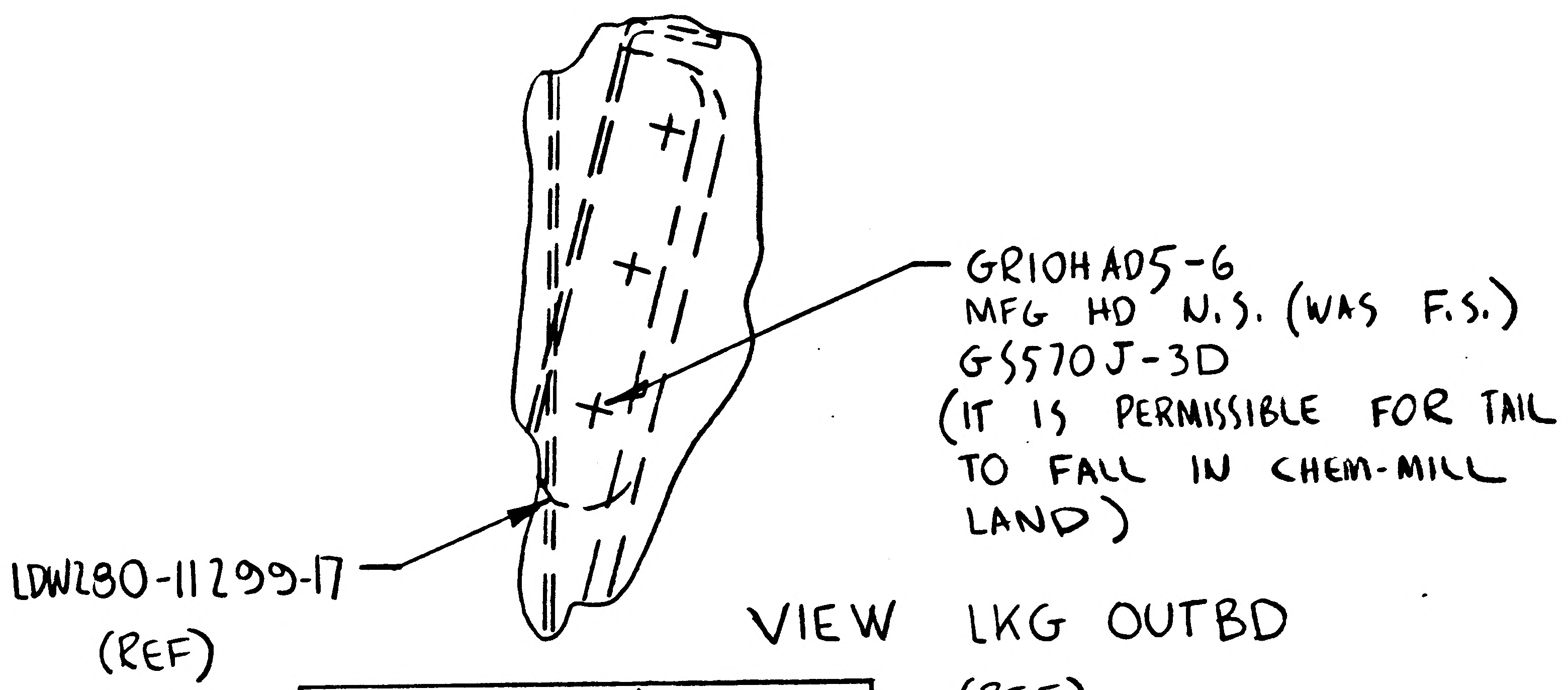
GR10HAD5-6
MFG HD N.S. (WAS F.S.)
GS570J-3D
(IT IS PERMISSIBLE FOR TAIL TO FALL IN CHEM-MILL LAND)
LDW280-11299-17
(REF)

VIEW LKG OUTBD
(REF)

DESCRIP. CONT'D.
TAIL TO FALL IN CHEM-MILL LAND"

DETAIL SPEC REQ	☐	CL II ENGRG CHG	☐	CL I ENGRG CHG	☐	☐

REASON FOR EO: TO PROVIDE SATISFACTORY JOINT

DESCRIPTION OF EO: IN FLD FOR -1 GR10HAD5 MFG HO N.S. (WAS F.S.) ADDED CALLOUT "PERMISSIBLE FOR (Cont'd)

GAEC Ⓒ EO RELEASE: 5 ⓔ 9/13

MODEL	PROCURING ACTIVITY NO.	GAEC UNIT NO.	SUB CONTR UNIT NO.
LEM		LEM-2 (32)	

DRAWING CHANGE REQD: REVISE DWG ✓ RECORD EO
DISPOSITION OF PARTS: REWORK ✓ SCRAP

APPROVED BY		dam		~	JFJ	CH	RMC Ⓔ	Geo
DATE	9-16-66	1JL		~	9-9-66	9-9-66	9-13	9/10/66
9-8-66	V.D.I.	~~SUPPORT~~	RELIAB. GROUP	GROUP LEADER	STRESS GROUP	LIAISON ENGRG	PROJ ENGRG	

PRIORITY	DRAWING TITLE	DRAWING NO.	EO NO.
C	BKT INSTL - A/S - CABIN SEQ CAMERA SUPT	LDW280-52475	A3

ISSUED BY LIAISON - R.F. HUBER X6452 SECTION VDI GROUP NO. 335 PL 35

01

NAS 9-1100

C

ENG 32.1 REV 3-65

GRUMMAN AIRCRAFT ENGINEERING CORP.
CODE IDENT NO. 26512
ENGINEERING ORDER *

~~DWG.~~ NO. LEO 280
EO NO. 585
CONTROL INFO NO. LDW280A-6651

ON THE NOTED DWGS. ADD LTA-8(18) EFFECTIVITY:

DWG. NO.	DASH * NO.	NEXT ASSY.	NO. REQD PER. VEH.	TITLE	CHG. NO.
LDW280-52475 ✓	-1	LDW280-28075	1	BRACKET INSTL. A/S CAB.-SEQUENCE CAMERA SUPT.	A4
LDW280-11298	-11	LDW280-52475	1	BRACKET A/S CAB. SEQUENCE CAMERA SUPT.	A3
	-15		1		
	-17		1		
	-19	LDW280-52475	1		
LDW280-11299	-11	LDW280-52475	1	BRACKET A/S CAB. SEQUENCE CAMERA SUPT	A1
	-13		1		
	-15		1		
	-17		1		
	-19	LDW280-52475	1		

DETAIL SPEC REQ ☐ CL II ENGRG CHG ☐ CL I ENGRG CHG ☑ CCA 537 LCD -1286 5

REASON FOR EO: ADDITIONAL REQUIREMENTS FOR LTA-8. 16MM SEQUENCE CAMERA SUPT.

DESCRIPTION OF EO: ADDED LTA-8 REQUIREMENTS. FOR *

Ⓡ GAEC EO RELEASE Ⓒ JK 5/5/67

MODEL	EFFECTIVITY: PROCURING ACTIVITY NO.	GAEC UNIT NO.	SUB CONTR UNIT NO.
LM	LTA-8(18)		

DRAWING CHANGE REQD: REVISE DWG ✓ RECORD EO
DISPOSITION OF PARTS: REWORK SCRAP

			SUPPORT	RELIAB. GROUP	GROUP LEADER	STRESS GROUP	LIAISON ENGRG	PROJ ENGRG	~~GOVT~~
APPROVED BY	Jap				7WR	mjm		Dam	
DATE	4/28/67				4/28/67	5/2/67		5/3/67	5-5-67
2	VDI.								

PRIORITY: C
DRAWING TITLE: NOTED
~~DRAWING~~ NO.: LEO 280
EO NO.: 585

ISSUED BY E. STAHL 4-28-67 X7033 SECTION V.D.I. GROUP NO. 335 PL 25

01 NAS 9-1100

GRUMMAN AIRCRAFT ENGINEERING CORP

BETHPAGE, L.I., NEW YORK

LDW280-245-

01

NAS 9-1100

REVISIONS

CHANGE LTR FILM NO.	SHEET NO.	ZONE					DESCRIPTION	EFFECTIVITY	DISPOSITION OF EXISTING PARTS		CHANGED BY AND DATE	CHKD APPD	ENGR APPD
									REWORK	SCRAP			
	[illegible]					EO A L[illegible]	EO [illegible] INITIAL DRAWING RELEASE [illegible] MADE PER EO	LM-[illegible]	NOT	REQD	[illegible]	[illegible]	[illegible]

GRUMMAN AIRCRAFT ENGINEERING CORP. BETHPAGE, L.I., NEW YORK

SIZE	CODE IDENT NO.	
B	26512	LDW280-52495

SCALE NONE SHEET

01

NAS 9-1100

-4	-3	-2	-	CODE IDENT	PART NO.	NGT	NOMENCLATURE OR DESCRIPTION	MATERIAL	GOVT SPEC	COML SPEC	STOCK SIZE	PROCESS SYM	FINISH NO	ZONE
32	32	32	32		NAS[illegible]-06	E	SCREW	STD PART						
		2	2		NAS686B406L	▼	NUT-PLATE	▼						
32	32	2	2		NAS687A06LK		NUT-PLATE							
		8	8		NAS687A06L		NUT-PLATE							
					MS20470B33		RIVET							
					MS20426B33		RIVET	▼						
32	32	32	32		AN960C6		WASHER	STD PART						
		2	2		LDW280F-[illegible]-7		COVER	SEE DWG						[illegible]
		2	2		▼ -5		COVER	▼						[illegible]
		2	2		▼ -3		COVER							[illegible]
		2	2		LDW280F-[illegible]		COVER							[illegible]
					LDW280-[illegible]-8		SKIN							[illegible]
					▼ -7		SKIN							[illegible]
					-6		SKIN							[illegible]
					-5		SKIN							[illegible]
					-4		COVER							[illegible]
					-3		COVER							[illegible]
					▼ -2		COVER							[illegible]
					LDW280-[illegible]		COVER							[illegible]
1					LDW280-[illegible]-3		COVER	▼						[illegible]
2	2				LDW280-[illegible]		COVER	SEE DWG						[illegible]
		1			LDW280-52495-4		SHIELD ASSY					NONE	NONE	8A
					LDW280-52495-3		SHIELD ASSY					NONE	NONE	8A
					LDW280-52495-2	▼	SHIELD INSTALL					NONE	NONE	8A
					LDW280-52495-	E	SHIELD INSTALL					NONE	NONE	8A

QTY PER ASSEMBLY

SYM OF NO.	PROCESS OF FINISH	GRUMMAN SPEC OR MILITARY SPEC	SYM OF NO.	PROCESS OF FINISH	GRUMMAN SPEC OR MILITARY SPEC	SYM OF NO.	PROCESS OF FINISH	GRUMMAN SPEC OR MILITARY SPEC

I & T: IDENTIFICATION AND TRACEABILITY IN ACCORDANCE WITH :
NONE

GRUMMAN AIRCRAFT ENGRG CORP. BETHPAGE L. I. NEW YORK

SIZE	CODE IDENT NO.		
B	26512	LDW280-52495	-

SCALE NONE

SHEET 2 OF 2

01

NAS 9-1100

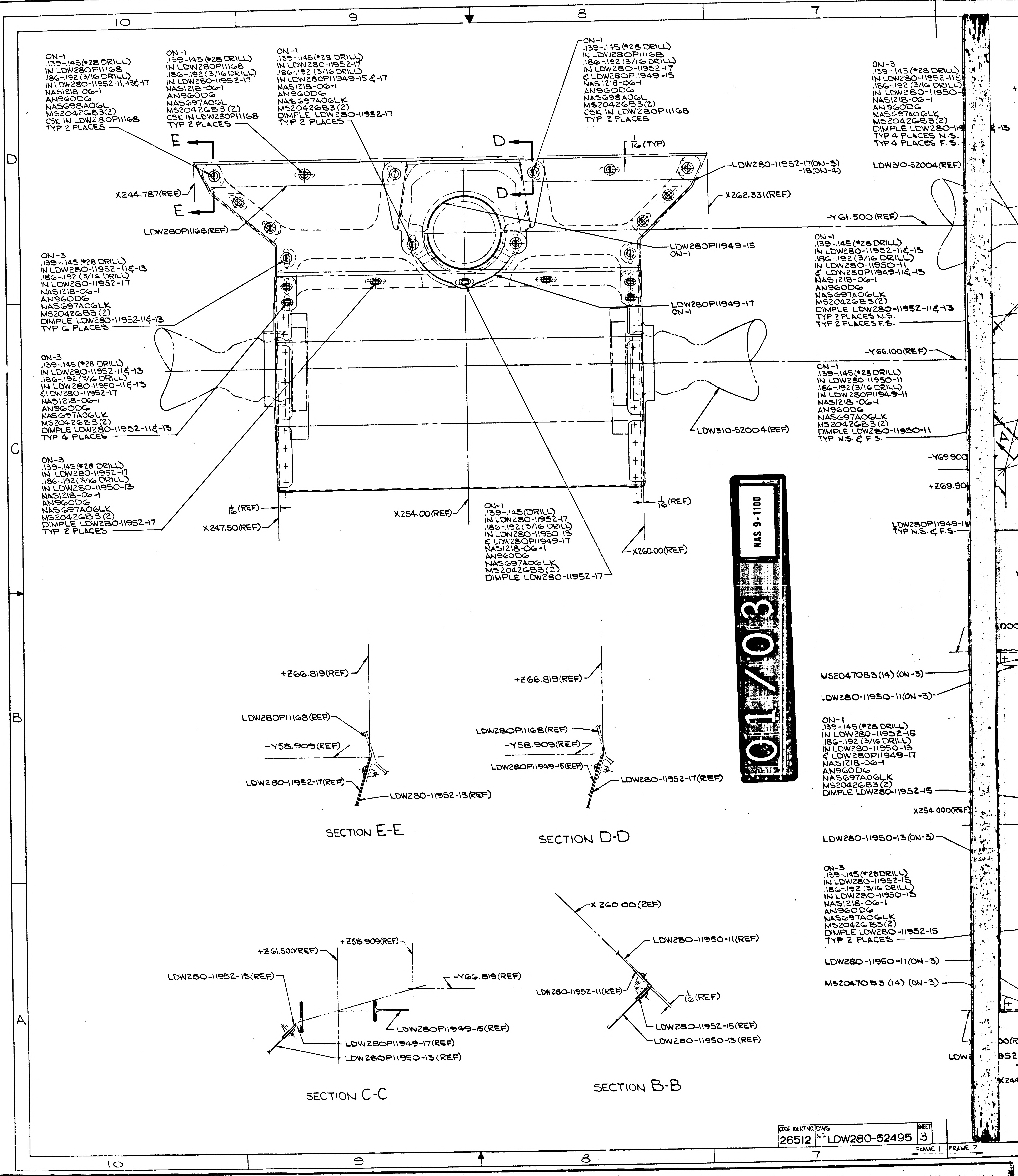
ON-1
.139-.145(#28 DRILL)
IN LDW280P11168
.186-.192 (3/16 DRILL)
IN LDW280-11952-11,-13&-17
NAS1218-06-1
AN960D6
NAS698A06L
MS20426B3(2)
CSK IN LDW280P11168
TYP 2 PLACES
ON-1
.139-.145 (#28 DRILL)
IN LDW280P11168
.186-.192 (3/16 DRILL)
IN LDW280-11952-17
NAS1218-06-1
AN960D6
NAS697A06L
MS20426B3 (2)
CSK IN LDW280P11168
TYP 2 PLACES
ON-1
.139-.145(#28 DRILL)
IN LDW280-11952-17
.186-.192 (3/16 DRILL)
IN LDW280P11949-15 &-17
NAS1218-06-1
AN960D6
NAS697A06LK
MS20426B3(2)
DIMPLE LDW280-11952-17
TYP 2 PLACES
ON-1
.139-.145 (#28 DRILL)
IN LDW280P11168
.186-.192 (3/16 DRILL)
IN LDW280-11952-17
& LDW280P11949-15
NAS1218-06-1
AN960D6
NAS698A06L
MS20426B3(2)
CSK IN LDW280P11168
TYP 2 PLACES
ON-3
.139-.145(#28 DRILL)
IN LDW280-11952-11&
.186-.192 (3/16 DRILL)
IN LDW280-11950-
NAS1218-06-1
AN960D6
NAS697A06LK
MS20426B3(2)
DIMPLE LDW280-11
TYP 4 PLACES N.S.
TYP 4 PLACES F.S.
E
E
D
D
1/16 (TYP)
X244.787(REF)
LDW280-11952-17(ON-3)
-18(ON-4)
X262.331(REF)
LDW310-52004(REF)
LDW280P11168(REF)
-Y61.500 (REF)
LDW280P11949-15
ON-1
ON-1
.139-.145(#28 DRILL)
IN LDW280-11952-11&-13
.186-.192 (3/16 DRILL)
IN LDW280-11950-11
& LDW280P11949-11&-13
NAS1218-06-1
AN960D6
NAS697A06LK
MS20426B3(2)
DIMPLE LDW280-11952-11&-13
TYP 2 PLACES N.S.
TYP 2 PLACES F.S.
ON-3
.139-.145 (#28 DRILL)
IN LDW280-11952-11&-13
.186-.192 (3/16 DRILL)
IN LDW280-11952-17
NAS1218-06-1
AN960D6
NAS697A06LK
MS20426B3 (2)
DIMPLE LDW280-11952-11&-13
TYP 6 PLACES
LDW280P11949-17
ON-1
-Y66.100(REF)
ON-3
.139-.145 (#28 DRILL)
IN LDW280-11952-11&-13
.186-.192 (3/16 DRILL)
IN LDW280-11950-11&-13
&LDW280-11952-17
NAS1218-06-1
AN960D6
NAS697A06LK
MS20426B3 (2)
DIMPLE LDW280-11952-11&-13
TYP 4 PLACES
ON-1
.139-.145(#28 DRILL)
IN LDW280-11950-11
.186-.192 (3/16 DRILL)
IN LDW280P11949-11
NAS1218-06-1
AN960D6
NAS697A06LK
MS20426B3 (2)
DIMPLE LDW280-11950-11
TYP N.S. & F.S.
LDW310-52004(REF)
-Y69.900
ON-3
.139-.145(#28 DRILL)
IN LDW280-11952-17
.186-.192(3/16 DRILL)
IN LDW280-11950-13
NAS1218-06-1
AN960D6
NAS697A06LK
MS20426B3 (2)
DIMPLE LDW280-11952-17
TYP 2 PLACES
+Z69.90
1/16 (REF)
X247.50(REF)
X254.00(REF)
ON-1
.139-.145(DRILL)
IN LDW280-11952-17
.186-.192 (3/16 DRILL)
IN LDW280-11950-13
& LDW280P11949-17
NAS1218-06-1
AN960D6
NAS697A06LK
MS20426B3(2)
DIMPLE LDW280-11952-17
1/16 (REF)
X260.00(REF)
LDW280P11949-1
TYP N.S. & F.S.
+Z66.819(REF)
LDW280P11168(REF)
-Y58.909(REF)
LDW280-11952-17(REF)
LDW280-11952-13(REF)
SECTION E-E
+Z66.819(REF)
LDW280P11168(REF)
-Y58.909(REF)
LDW280P11949-15(REF)
LDW280-11952-17(REF)
SECTION D-D
MS20470B3(14) (ON-3)
LDW280-11950-11(ON-3)
ON-1
.139-.145(#28 DRILL)
IN LDW280-11952-15
.186-.192 (3/16 DRILL)
IN LDW280-11950-13
& LDW280P11949-17
NAS1218-06-1
AN960D6
NAS697A06LK
MS20426B3 (2)
DIMPLE LDW280-11952-15
X254.000(REF)
LDW280-11950-13(ON-3)
ON-3
.139-.145(#28DRILL)
IN LDW280-11952-15
.186-.192 (3/16 DRILL)
IN LDW280-11950-13
NAS1218-06-1
AN960D6
NAS697A06LK
MS20426B3(2)
DIMPLE LDW280-11952-15
TYP 2 PLACES
LDW280-11950-11(ON-3)
MS20470B3 (14) (ON-3)
+Z61.500(REF)
+Z58.909(REF)
LDW280-11952-15(REF)
-Y66.819(REF)
LDW280P11949-15(REF)
LDW280P11949-17(REF)
LDW280P11950-13 (REF)
SECTION C-C
X 260.00(REF)
LDW280-11950-11(REF)
LDW280-11952-11(REF)
1/16(REF)
LDW280-11952-15(REF)
LDW280-11950-13 (REF)
SECTION B-B
A
10
9
8
7
D
C
B
A
FRAME 1
FRAME 2

01/03 NAS 9-1100

CODE IDENT NO	DWG NO	SHEET
26512	LDW280-52495	3

NOTES:
1. NO TOOLING HOLES P[illegible]ED IN
2. INSTALL FASTENERS PE[illegible] 14-153

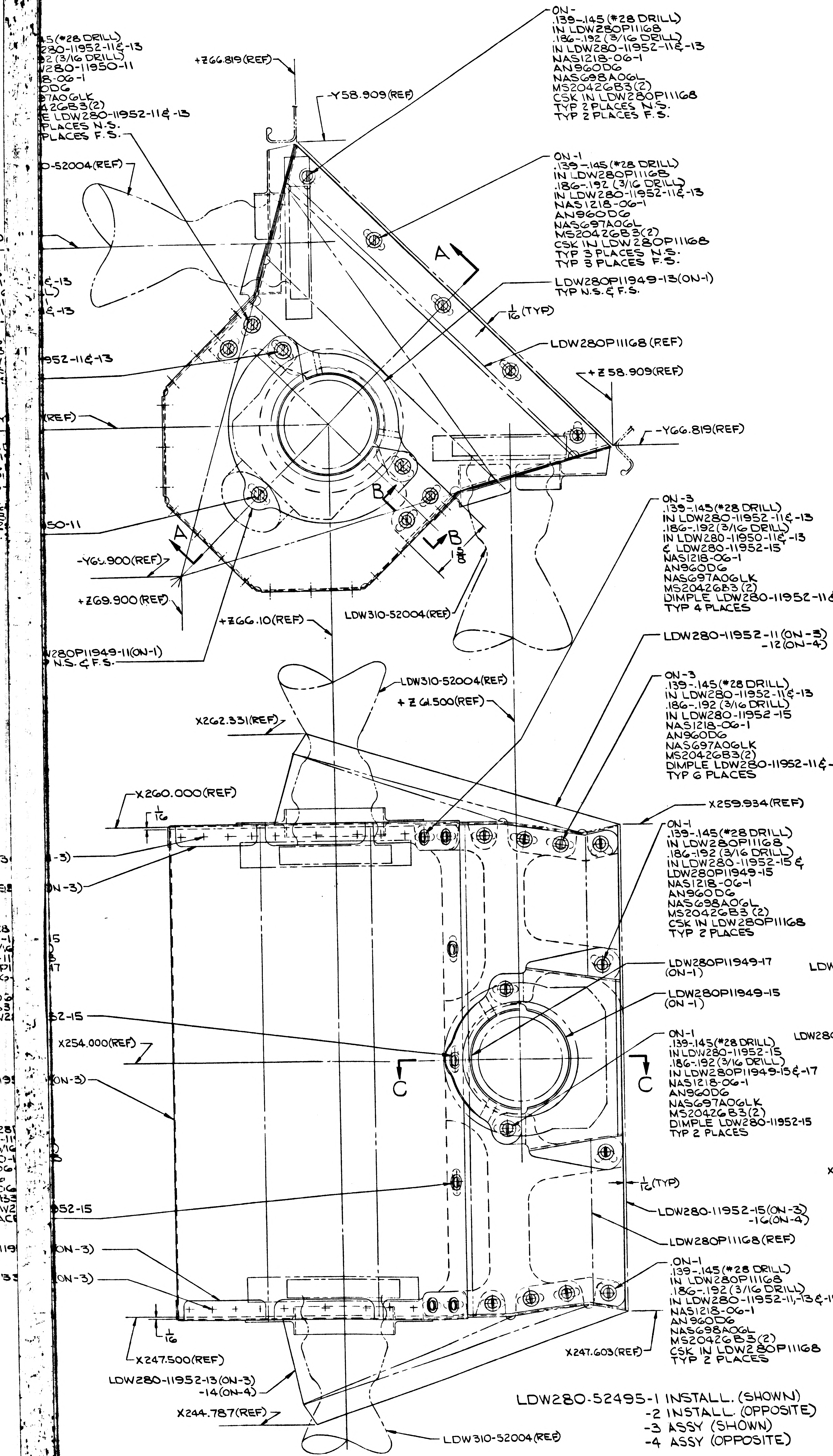

ON-
.139-.145 (#28 DRILL)
IN LDW280P11168
.186-.192 (3/16 DRILL)
IN LDW280-11952-11&-13
NAS1218-06-1
AN960D6
NAS698A06L
MS20426B3(2)
CSK IN LDW280P11168
TYP 2 PLACES N.S.
TYP 2 PLACES F.S.
+Z66.819(REF)
-Y58.909(REF)
ON-1
.139-.145 (#28 DRILL)
IN LDW280P11168
.186-.192 (3/16 DRILL)
IN LDW280-11952-11&-13
NAS1218-06-1
AN960D6
NAS697A06L
MS20426B3(2)
CSK IN LDW280P11168
TYP 3 PLACES N.S.
TYP 3 PLACES F.S.
A
LDW280P11949-13(ON-1)
TYP N.S. & F.S.
1/16 (TYP)
LDW280P11168 (REF)
+Z58.909(REF)
-Y66.819(REF)
B
1 5/8
-Y66.900(REF)
+Z69.900(REF)
+Z66.10(REF)
LDW310-52004(REF)
ON-3
.139-.145(#28 DRILL)
IN LDW280-11952-11&-13
.186-.192(3/16 DRILL)
IN LDW280-11950-11&-13
& LDW280-11952-15
NAS1218-06-1
AN960D6
NAS697A06LK
MS20426B3 (2)
DIMPLE LDW280-11952-11&-13
TYP 4 PLACES
LDW280-11952-11 (ON-3)
-12 (ON-4)
LDW310-52004(REF)
+Z61.500(REF)
ON-3
.139-.145(#28 DRILL)
IN LDW280-11952-11&-13
.186-.192 (3/16 DRILL)
IN LDW280-11952-15
NAS1218-06-1
AN960D6
NAS697A06LK
MS20426B3(2)
DIMPLE LDW280-11952-11&-13
TYP 6 PLACES
X262.331(REF)
X260.000(REF)
X259.934(REF)
ON-1
.139-.145(#28 DRILL)
IN LDW280P11168
.186-.192 (3/16 DRILL)
IN LDW280-11952-15 &
LDW280P11949-15
NAS1218-06-1
AN960D6
NAS698A06L
MS20426B3 (2)
CSK IN LDW280P11168
TYP 2 PLACES
LDW280P11949-17
(ON-1)
LDW280P11949-15
(ON-1)
X254.000(REF)
C
C
ON-1
.139-.145(#28 DRILL)
IN LDW280-11952-15
.186-.192(3/16 DRILL)
IN LDW280P11949-15&-17
NAS1218-06-1
AN960D6
NAS697A06LK
MS20426B3(2)
DIMPLE LDW280-11952-15
TYP 2 PLACES
1/16 (TYP)
LDW280-11952-15(ON-3)
-16(ON-4)
LDW280P11168(REF)
.ON-1
.139-.145(#28 DRILL)
IN LDW280P11168
.186-.192(3/16 DRILL)
IN LDW280-11952-11,-13&-15
NAS1218-06-1
AN960D6
NAS698A06L
MS20426B3(2)
CSK IN LDW280P11168
TYP 2 PLACES
1/16
X247.500(REF)
X247.603(REF)
LDW280-11952-13(ON-3)
-14(ON-4)
X244.787(REF)
LDW310-52004(REF)

LDW280-52495-1 INSTALL. (SHOWN)
-2 INSTALL. (OPPOSITE)
-3 ASSY (SHOWN)
-4 ASSY (OPPOSITE)

VIEW LOOKING INBD L.H. SIDE

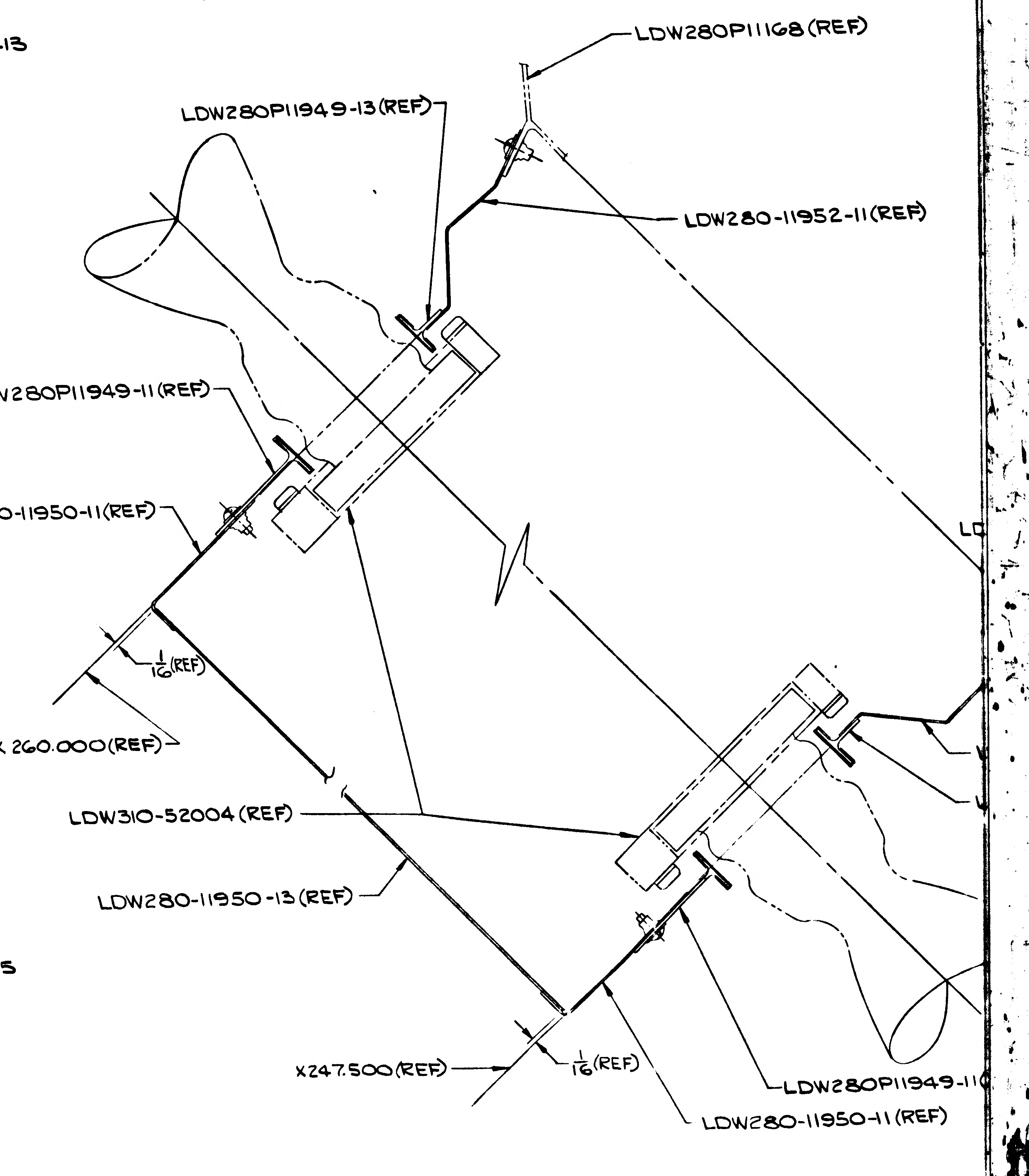

LDW280P11168(REF)
LDW280P11949-13(REF)
LDW280-11952-11(REF)
LDW280P11949-11(REF)
LDW280-11950-11(REF)
1/16 (REF)
X260.000(REF)
LDW310-52004 (REF)
LDW280-11950-13 (REF)
X247.500(REF)
1/16 (REF)
LDW280P11949-11
LDW280-11950-11(REF)

SECTION A-A

NAS 9-1100

02/03

CODE IDENT NO	DWG NO	SHEET
26512	LDW280-52495	3

NOTES:
1. NO TOOLING HOLES PERMITTED IN PARTS
2. INSTALL FASTENERS PER LSP 14-15302

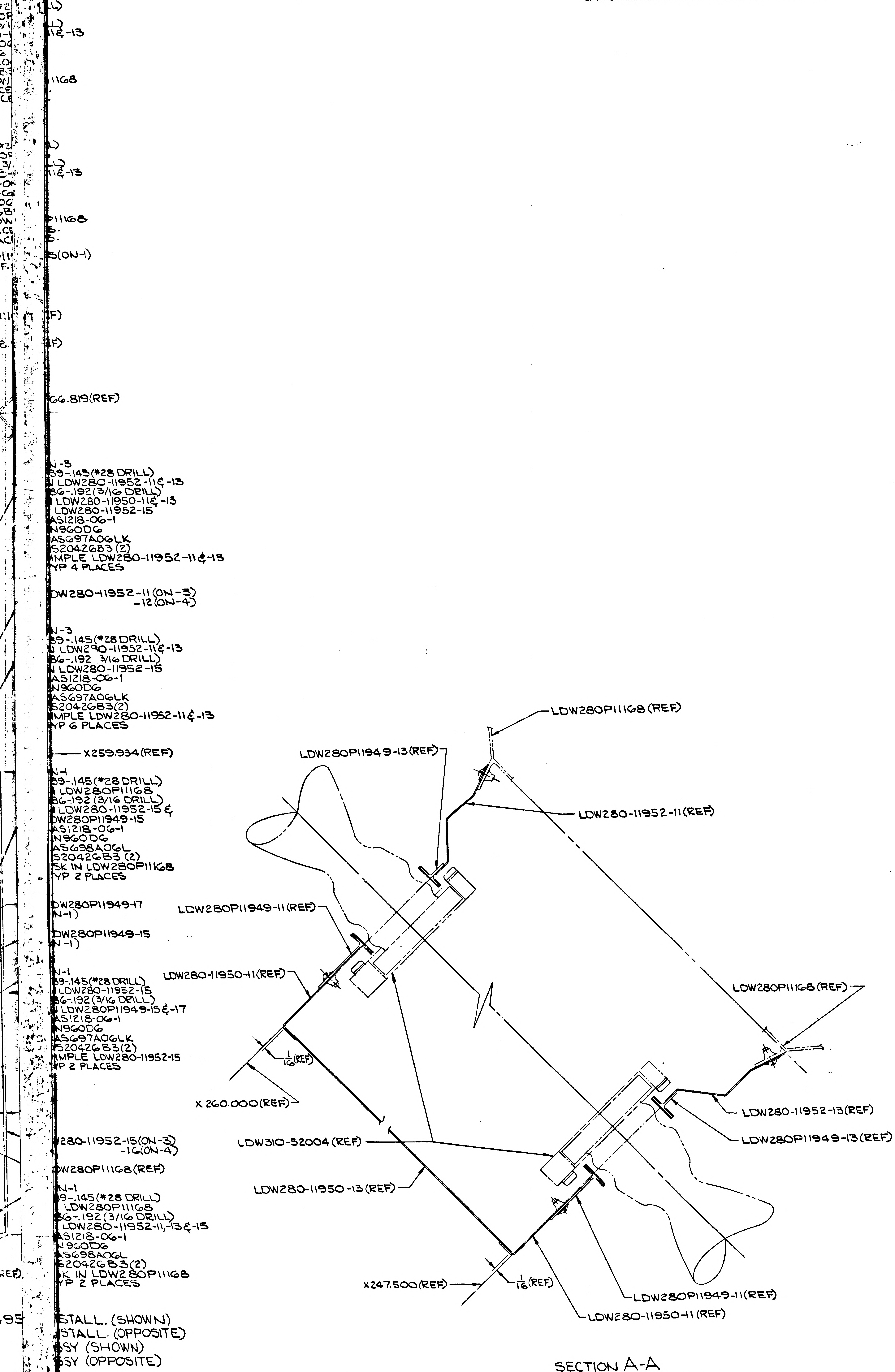
L)
L)
I€-13
I1168
I1168
S.
S.
S(ON-1)
F)
F)
66.819(REF)
N-3
39-.145(#28 DRILL)
N LDW280-11952-11€-13
86-.192(3/16 DRILL)
LDW280-11950-11€-13
LDW280-11952-15
AS1218-06-1
N960D6
AS697A06LK
S20426B3(2)
IMPLE LDW280-11952-11€-13
YP 4 PLACES
DW280-11952-11(ON-3)
-12(ON-4)
N-3
39-.145(#28 DRILL)
N LDW290-11952-11€-13
86-.192 3/16 DRILL)
N LDW280-11952-15
AS1218-06-1
N960D6
AS697A06LK
S20426B3(2)
IMPLE LDW280-11952-11€-13
YP 6 PLACES
X259.934(REF)
N-1
39-.145(#28 DRILL)
LDW280P11168
86-.192(3/16 DRILL)
LDW280-11952-15 €
DW280P11949-15
AS1218-06-1
N960D6
AS698A06L
S20426B3 (2)
SK IN LDW280P11168
YP 2 PLACES
DW280P11949-17
N-1)
DW280P11949-15
N-1)
N-1
39-.145(#28 DRILL)
LDW280-11952-15
86-.192(3/16 DRILL)
LDW280P11949-15€-17
AS1218-06-1
N960D6
AS697A06LK
S20426B3(2)
IMPLE LDW280-11952-15
YP 2 PLACES
280-11952-15(ON-3)
-16(ON-4)
DW280P11168(REF)
N-1
39-.145(#28 DRILL)
LDW280P11168
86-.192(3/16 DRILL)
LDW280-11952-11,-13€-15
AS1218-06-1
N960D6
AS698A06L
S20426B3(2)
K IN LDW280P11168
YP 2 PLACES
STALL. (SHOWN)
STALL. (OPPOSITE)
SY (SHOWN)
SY (OPPOSITE)
LDW280P11168(REF)
LDW280P11949-13(REF)
LDW280-11952-11(REF)
LDW280P11949-11(REF)
LDW280-11950-11(REF)
LDW280P11168(REF)
1/16(REF)
X 260.000(REF)
LDW280-11952-13(REF)
LDW280P11949-13(REF)
LDW310-52004(REF)
LDW280-11950-13(REF)
X247.500(REF)
1/16(REF)
LDW280P11949-11(REF)
LDW280-11950-11(REF)

SECTION A-A

CODE IDENT NO.	DWG NO.	SHEET
26512	LDW280-52495	3

FRAME 2 FRAME 3

MANUFACTURING OPERATIONS
UNLESS OTHERWISE SPECIFIED
NOTES CHECKED √ APPLY TO THIS DWG.

PART NUMBER AND ALL OTHER MARKINGS IN REGION MARKED ▭ USE BOTH SIDES IF NECESSARY.	
FILLET AND INSIDE CORNER RADII TOLERANCES .016R TO .062R ± .010 .063R TO .250R ± .015 OVER .250R ± .030	
DEPTH SHOWN FOR TAPPED HOLES IS FULL THDS. 2-3 IMP THDS. BEYOND PERMISSIBLE.	
EXTERNAL THREAD LENGTH SHOWN INCLUDES 2 IMPERFECT THREADS MAX.	
DO NOT CADMIUM PLATE & PAINT HOLES OR SURFACES MARKED WITH DOUBLE ASTERISK.	
MISMATCH STEP OF ± .005 PERMISSIBLE DUE TO CHANGE OF CUTTERS AT INSIDE INTERSECTING SURFACES.	
DIAMETERS MARKED MUST BE CONCENTRIC WITHIN FULL INDICATOR READING	
HOLES MUST BE KEPT FREE OF CHROME PLATING SOLUTION.	
ALL DIMENSIONS SHOWN TO BE MET AFTER CADMIUM PLATING. THICKNESS OF PLATE .0003 MIN. TO .0005 MAX. MIN. THICKNESS TO BE .0002 ON THREADED AREAS. NO ALLOWANCE FOR PLATING IN HOLES	
125 √ SURFACE ROUGHNESS INCLUDING REAMED HOLES PER MIL-STD-10	
200 √ FOR ALL DRILLED HOLES	
REMOVE ALL BURRS. BREAK ALL EDGES .015-.031	
INSPECTION INFORMATION MINIMUM PERMISSIBLE AVERAGE EDGE DISTANCE MARKED IS	
SYMBOL √ DENOTES SURFACE TO BE MACHINED	
UNLESS OTHERWISE SPECIFIED TOLERANCE ON FLANGES IS ± 1/32	
LENGTHS OF AN, NAS & MS AL ALY RIVETS SHORTER THAN 1 INCH ARE NOT SPECIFIED.	
TOLERANCE ON LOFTED DELINEATIONS IS	

DWG SIZE 40 X 80

PRINTING INFO ONLY
FULL SIZE SHEET AREA (42 X 92) = 26.84 SQ. FT.
1/2 SIZE SHEET AREA (1/4 OF FULL) = 6.71 SQ. FT.
PRINT TRIM LINE

03703
NAS 9-1100

GRUMMAN AIRCRAFT ENGRG CORP., BETHPAGE, L. I., NEW YORK

	SIZE	CODE IDENT NO.		
LM	K	26512	LDW280-52495	A
MODEL OR END ITEM	SCALE FULL		SHEET	

LDW280-52495 A

LDW280-52495 A

ENG 32.1 REV 3-65

GRUMMAN AIRCRAFT ENGINEERING CORP.
CODE IDENT NO. 26512
ENGINEERING ORDER

DWG. NO. LEO 280
EO NO. 972
CONTROL INFO NO. LDW 280B 3206

LFM

ON DWG. LISTED BELOW, REVISE NEXT ASSY FOR DASH NOS.-*. EFF. LM-4(34) THRU LM-15(45)
N/A (WAS) LDW 280-53173 (NOW) LDW 280-54173

DWG. NO.	TITLE	DASH NOS. - *	E.O. NO.
LDW 280-28175 ✓	SEE DWG	-7	G1
-52495 ✓	↑	-1 & -2	B1
-53178		-1 & -2	H9
-53179		-1 & -2	A7
P11546	↓	-13-1	A9
LDW 280-28244	SEE DWG	-5 & -6	B4

DETAIL SPEC REQ ☐ CL II ENGRG CHG ☐ CL I ENGRG CHG ☑ LCD 2360 PKG 27 (5)

REASON FOR EO: PLUME HEATING PROTECTION

DESCRIPTION OF EO: IN M/B, REVISE N/A FOR -*. EFF LM-4 THRU LM-15 N/A (WAS) LDW 280-53173

GAEC EO RELEASE: VK 5/23/68

MODEL	PROCURING ACTIVITY NO.	GAEC UNIT NO.	SUB CONTR UNIT NO.
LM	LFM 140	LM-4(34) & LM-5(35)	
LM		LM-6(36) THRU LM-15 (45)	

DRAWING CHANGE REQD: REVISE DWG ✓ RECORD EO
DISPOSITION OF PARTS: REWORK N/A SCRAP

APPROVED BY					F.N.P.	GR			
DATE	5/6/68	5/9/68			5/4/68	5/8/68		5/9/68	5-22-64
0	VDI	SUPPORT	RELIAB. GROUP		GROUP LEADER	STRESS GROUP	LIAISON ENGRG	PROJ ENGRG	

PRIORITY: C
DRAWING TITLE: SEE DWG
DRAWING NO. LEO 280
EO NO. 972

5/8/68 ISSUED BY B.J. TOCKARSHEWSKY x7033 SECTION V.D.I. GROUP NO. 280 PL 25

01

NAS 9-1100

ENG 32.1 REV 3-65

GRUMMAN AIRCRAFT ENGINEERING CORP.
CODE IDENT NO. 26512
ENGINEERING ORDER

DWG. NO. LEO280
EO NO. 1060
CONTROL INFO NO. LDW280B-4258

REMOVE LM-6 THRU LM-15 EFFECTIVITY ON FOLLOWING DWGS:

DWG. NO.	DASH NO. *	CHANGE NO.
LDW280-52495	-2	B2
-53179	-1, -2	A8
-53180	-51-1, -52-1	A6
-53897	-75, -76	A9

SWIP

DETAIL SPEC REQ	☐	CL II ENGRG CHG	☐	CL I ENGRG CHG	☑ LCD-3179 PKG. 2 (5)

REASON FOR EO: SWIP II

DESCRIPTION OF EO: FOR DASH * REMOVED LM-6(36) THRU LM-15(45) EFFECTIVITY

GAEC EO RELEASE: JK 7/19/68

MODEL	PROCURING ACTIVITY NO.	GAEC UNIT NO.	SUB CONTR UNIT NO.
LM		LM-6(36) THRU LM-15(45)	

DRAWING CHANGE REQD: REVISE DWG ✓ RECORD EO

DISPOSITION OF PARTS: REWORK SCRAP ✓

APPROVED BY	JaP			FWRus	SW		JaP	Lm
DATE	7/11/68			7/10/68	7-15		7/15/68	7-17-68
	VDI	SUPPORT	RELIAB. GROUP	GROUP LEADER	STRESS GROUP	LIAISON ENGRG	PROJ ENGRG	~~GOVT~~

PRIORITY: C
DRAWING TITLE: SEE DRAWING
DRAWING NO: LEO280
EO NO. 1060

7/17/68
ISSUED BY S. Leimoff 6-27-68
SECTION VEHICLE DESIGN
GROUP NO. 335
PL 19

01

NAS 9-110

01
NAS 9-1100

ENG 32.2 REV 3-65

GRUMMAN AIRCRAFT ENGINEERING CORP.
CODE IDENT NO. 26512
ENGINEERING ORDER

DWG. NO. LDW280-52495 | EO NO. B3
CONTROL INFO NO. LDW280B5843

IN F/D B/M & M.B.

RESTRICT-1 EFF TO LM-4 FOR N/A LDW280-54173 (WAS LM-4 THRU LM-15) RESTRICT-2 EFF TO LM-4 FOR N/A LDW280-54173 (WAS LM-4 & LM-5)

CREATE-1-1 & -2-1 SAME AS -1 & -2 RESPECTIVELY EXCEPT -3-1 & 4-1 REPLACES -3 & -4
-3-1 & -4-1 SAME AS -3 & -4 RESPECTIVELY EXCEPT LDW280-11952-13-1, -14-1, -15-1, -16-1, -17-1 & -18-1 REPLACES LDW280-11952-13, -14, -15, -16, -17 & -18 RESPECTIVELY.

EFF OF -1-1 & -2-1 LM-5(35) 1EA REQ PER N/A LDW280-54173

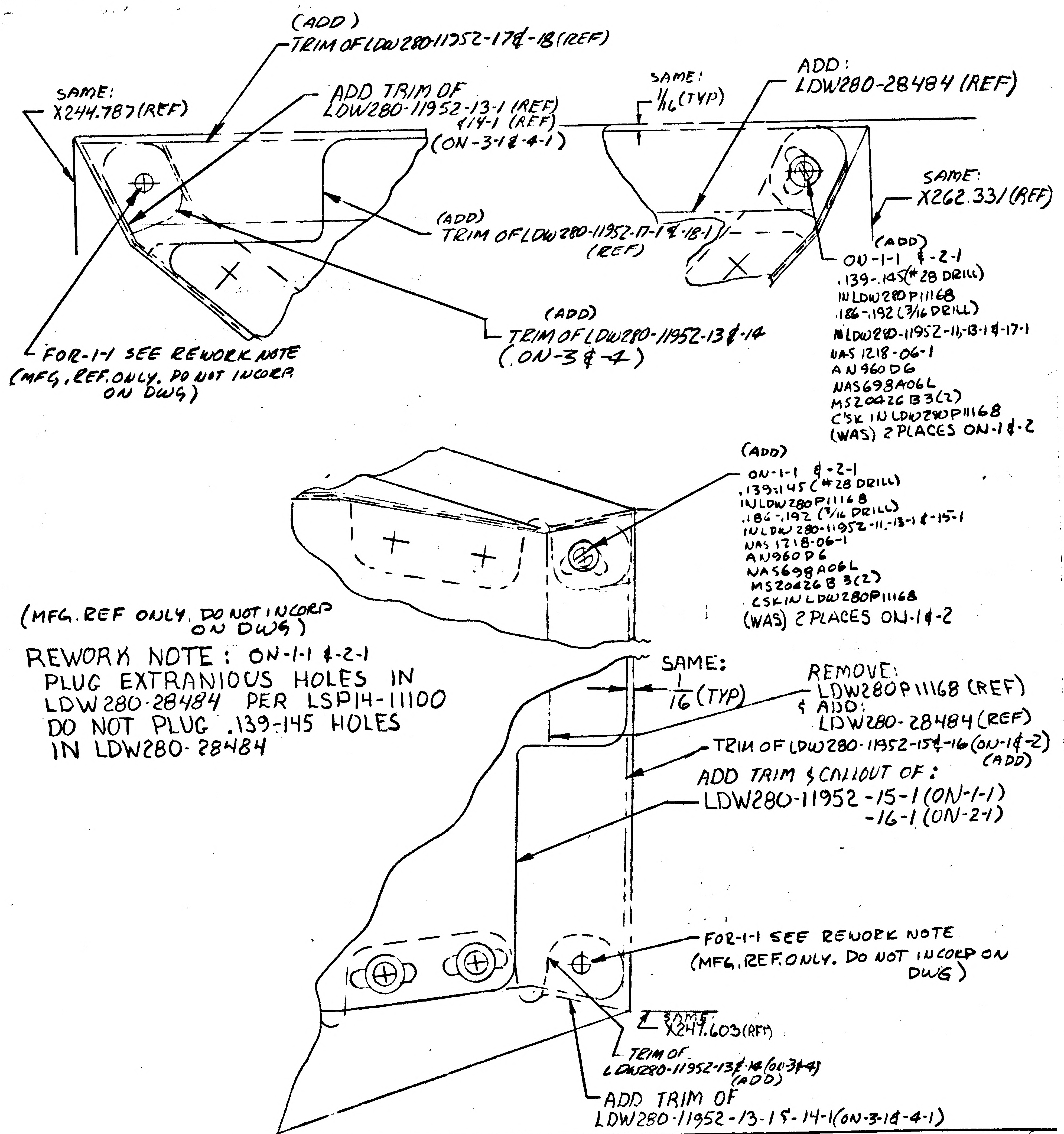
(ADD)
TRIM OF LDW280-11952-17 & -18 (REF)
SAME:
X244.787 (REF)
ADD TRIM OF
LDW280-11952-13-1 (REF)
& 14-1 (REF)
(ON-3-1 & -4-1)
(ADD)
TRIM OF LDW280-11952-17-1 & -18-1
(REF)
(ADD)
TRIM OF LDW280-11952-13 & -14
(ON-3 & -4)
FOR-1-1 SEE REWORK NOTE
(MFG, REF. ONLY, DO NOT INCORP. ON DWG)
SAME:
1/16 (TYP)
ADD:
LDW280-28484 (REF)
SAME:
X262.331 (REF)
(ADD)
ON-1-1 & -2-1
.139-.145 (#28 DRILL)
IN LDW280P11168
.186-.192 (3/16 DRILL)
IN LDW280-11952-11, -13-1 & -17-1
NAS 1218-06-1
AN960D6
NAS698A06L
MS20426B3(2)
C'SK IN LDW280P11168
(WAS) 2 PLACES ON-1 & -2
(ADD)
ON-1-1 & -2-1
.139-.145 (#28 DRILL)
IN LDW280P11168
.186-.192 (3/16 DRILL)
IN LDW280-11952-11, -13-1 & -15-1
NAS 1218-06-1
AN960D6
NAS698A06L
MS20426B3(2)
CSK IN LDW280P11168
(WAS) 2 PLACES ON-1 & -2
(MFG. REF ONLY. DO NOT INCORP ON DWG)
SAME:
1/16 (TYP)
REMOVE:
LDW280P11168 (REF)
& ADD:
LDW280-28484 (REF)
TRIM OF LDW280-11952-15 & -16 (ON-1 & -2)
(ADD)
ADD TRIM & CALLOUT OF:
LDW280-11952-15-1 (ON-1-1)
-16-1 (ON-2-1)
FOR-1-1 SEE REWORK NOTE
(MFG. REF. ONLY. DO NOT INCORP ON DWG)
SAME:
X247.603 (REF)
TRIM OF
LDW280-11952-13 & 14 (ON-3 & 4)
(ADD)
ADD TRIM OF
LDW280-11952-13-1 & -14-1 (ON-3-1 & -4-1)

REWORK NOTE: ON-1-1 & -2-1
PLUG EXTRANIOUS HOLES IN LDW280-28484 PER LSP14-11100
DO NOT PLUG .139-145 HOLES IN LDW280-28484

DETAIL SPEC REQ		CL II ENGRG CHG		CL I ENGRG CHG	✓	LCD 3499 PKG 1

REASON FOR EO: ADDITION OF R.C.S PLUME DEFLECTOR

DESCRIPTION OF EO:
RESTRICTED EFF OF -1 TO LM-4 BY REMOVING LM-5 THRU LM-15
RESTRICTED EFF OF -2 TO LM-4 BY REMOVING LM-5
CREATED -1-1, -2-1 INSTL & -3-1, -4-1 ASSY

GAEC EO RELEASE 10/23

MODEL	PROCURING ACTIVITY NO.	GAEC UNIT NO.	SUB CONTR UNIT NO.
LM		LM-5 (35)	
		THRU	
LM		LM-15 (45)	

DRAWING CHANGE REQD		DISPOSITION OF PARTS	
REVISE DWG	RECORD EO	REWORK	SCRAP
✓		✓	

APPROVED BY	MP			RMS	CL			
DATE	10/22/68	10/22/68		10/21/68	10/22/68		10/22/68	10-25-68
	VDI	SUPPORT	RELIAB. GROUP	GROUP LEADER	STRESS GROUP	LIAISON ENGRG	PROJ ENGRG	

PRIORITY	DRAWING TITLE	DRAWING NO.	EO NO.
C	SHIELD INSTL. A/S, CABIN-REACTION CONTROL SYSTEM SHIELD, FWD.	LDW280-52495	B3

102868 T. DALY
ISSUED BY P. FRANZESE x86048 SECTION VDI GROUP NO. 335 PL 25

LDW280-52508 B

MODEL OR END ITEM	NEXT ASSY	MODULE OR SER NO.	REQD PER MODULE OR END ITEM
PART NO.		GAEC SCH NO.	

MODEL OR END ITEM	NEXT ASSY	MODULE OR SER NO.	REQD PER MODULE OR END ITEM
PART NO.		GAEC SCH NO.	

MODEL OR END ITEM	NEXT ASSY	MODULE OR SER NO.	REQD PER MODULE OR END ITEM
LM	LDW280-52000	LM-2 (32)	1
PART NO. LDW280-52508-1		GAEC SCH NO. 50	

WORK PKG FUNCTION #110 ⑥

SH REV STATUS: FOR DESCRIPTION OF REV SEE SUBQ SH

SHEET	1.00	1.10	2.00	3.00						
REV	B	B	B	B						
SHEET			2.01							
REV			B							
SHEET										
REV										

LAST SECT LTR USED: E

LAST DASH NO. USED: -1

GRUMMAN REL INFO Ⓐ B

PRIM NO. 207 JK(001) ME-16R-2/4/9

UNLESS OTHERWISE SPECIFIED DIMENSIONS ARE IN INCHES.
TOLERANCE UNLESS SPECIFIED
FRACTIONS - DECIMALS - ANGLES
— — —

ORIG DWG AUTH
DETAIL SPEC REQUIREMENT
CLASS II ENGRG CHANGE
CLASS I ENGRG CHANGE

CONTRACT NO. NAS 9-1100
LINE ITEM
DOCUMENTATION TYPE II

DRAWN BY	LUNDSTEN 5-9-67	RELIABILITY	
LAYOUT BY	WEISSLITZ		
CHECKED BY	J. Bell 6/16/67		
GR LEADER	J. STRUKOSCH		
VEH DES INT	J. Pusateri 7/25		
STRUCTURES		PROJ ENGR	Pusateri 7/17/67
STRUCTURES	FEB 7/26	REL GROUP	7/21/67
WEIGHTS			

GRUMMAN AIRCRAFT ENGRG CORP
BETHPAGE, L. I., NEW YORK

EQUIPMENT INSTALLATION DESCENT STAGE ~ SUB SYSTEMS

SIZE B | CODE IDENT NO. 26512 | LDW280-52508 B

SCALE NONE | SHEET 1.00 OF 5 ③

ENG 77.1 12-65

01

NAS 9-1100

REVISIONS FOR CONTINUATION OF REVISIONS SEE SHEET ______

CHANGE LTR	ITEM NO.	SHEET NO.	ZONE	GRUMMAN INFO ONLY	DET SPEC	CLASS I	CLASS II	ENGRG ORDER	DESCRIPTION	EFFECTIVITY	DISPOSITION OF EXISTING PARTS REWORK	DISPOSITION OF EXISTING PARTS SCRAP	CHANGED BY AND DATE	ENGRG APPD	APPD
A	1	1, 1.10,						EO A1	EO A1 -INITIAL DRAWING RELEASE, PARTS MADE PER EO	LM-2	NOT	REQD	LUNDSTEN		
	2	2,3						EO A2	FOR -1, ADDED NOTE #1		✓		5-9-67		
B	1	1.10,1.00+3	3C						INC. EO B1.	LM-2(32)			P. KOCHLING 1-16-69 N.D. E.C.G.		
	2	1.00,1.10 2.00,3.00	2B 3A	B					INC. EO B2.						
	3	1.00,1.10 2.00,2.01 3.00	4A 5B 8C 11A 12B	S					INC. EO B3. ADDED SH 2.01.						
	4	1.00,1.10 2.00,2.01 3.00	3B 4B 8A 11C	S					INC. EO B4.						
	5	1.00,1.10 2.01,3.00	8B	S					INC. EO B5.						
	6	1.00,1.10 2.00,3.00	3B	S					INC. EO B6.						
	7	1.00,1.10 2.00,3.00	3B	S					INC. EO B7.						
	8	2.00,3.00		LFM 301					INC. EO B8						
	9	2.01,3.00		S	✓				REF. EO B3: REMOVED LDW360-28297-15		✓			1/31/69 F. Zukes 1-69	

CHG APPROVED

LTR	GROUP LDR	VEH DES INT	STRUCTURES	STRUCTURES	WEIGHTS	RELIABILITY
A	—	Cusateri 7/25	7/25			
B	1-30-69	1/30/69		1/31/69		

GRUMMAN AIRCRAFT ENGRG CORP., BETHPAGE, L. I., NEW YORK

SIZE B
CODE IDENT NO. 26512
LDW280-52508 B
SCALE NONE
SHEET 1.10

ENG 77.16 3-66

01

NAS 9-1100

QTY PER ASSEMBLY -1	CODE IDENT	PART NO.	I&T	NOMENCLATURE OR DESCRIPTION	MATERIAL	GOVT SPEC	COML SPEC	STOCK SIZE	PROCESS SYM	FINISH NO.	ZONE
1		LDW330-52101-1	E	SUB SYSTEM INSTL	SEE DWG						4D
1		LDW300-52500-1		SYSTEM INSTL							12B
1		LDW280-52509-1		SUPPORT INSTL							3B
1		LDW280-52609-1		LINES INSTL							4B
1		LDW280-52608-5		LINES INSTL							3B
1		LDW280-52608-3		LINES INSTL							12C
1		LDW280-52607-1		LINES INSTL							3B
1		LDW280-52553-1		THERMAL SHIELD INSTL							3C
4		LDW280-51823-4		SHIELD INSTL							11A
4		LDW280-51823-3		SHIELD INSTL							11A
1		LDW280-51369-3		PRES SENSING INSTL							3B
1		LDW280-51365-3		LINES INSTL							4A
1		LDW270-52300-1		HELIUM PRESS SYS							4B
1		LDW270-52100-1		DESCENT ENGINE							3C
1		LDW270-51453-5		GAGING SYST CONT							11C
1		LDW270-51451-23		DISCONNECT INSTL							11C
1		-21									4B
1		-17									11C
1		-15									12C
1		-13									3B
1		-11									3B
1		-5									8A
1		LDW270-51451-1		DISCONNECT INSTL	SEE DWG						4B
		LDW280-52508-1	E	EQUIPMENT INSTL					NONE	NONE	3A

SYM OR NO.	PROCESS OR FINISH	GRUMMAN SPEC OR MILITARY SPEC	SYM OR NO.	PROCESS OR FINISH	GRUMMAN SPEC OR MILITARY SPEC	SYM OR NO.	PROCESS OR FINISH	GRUMMAN SPEC OR MILITARY SPEC

I & T: IDENTIFICATION AND TRACEABILITY IN ACCORDANCE WITH : NONE

GRUMMAN AIRCRAFT ENGRG CORP, BETHPAGE, L. I., NEW YORK

SIZE	CODE IDENT NO.		
B	26512	LDW280-52508	B

SCALE NONE

SHEET 2.00

(B)

ENG 77.2 7-65

01

NAS 9-1100

QTY PER ASSEMBLY -1	CODE IDENT	PART NO.	I&T	NOMENCLATURE OR DESCRIPTION	MATERIAL	GOVT SPEC	COML SPEC	STOCK SIZE	PROCESS SYM	FINISH NO.	ZONE
1		LDW280-66542-2	E	CLAMP INSTL	SEE DWG						4D
1		LDW280-66542-1	E	CLAMP INSTL	SEE DWG						3A
1		LDW390-51006-7	E	EQUIP INSTL DESC.	SEE DWG						5B
1		LDW360-51285-11		TRANSDUCER INSTL							4A
1		LDW360-51285-7		TRANSDUCER INSTL							4C
1		LDW360-51285-4		TRANSDUCER INSTL							4C
1		LDW360-51285-3		TRANSDUCER INSTL							4B
1		LDW360-51260-11		ZONE BOX INSTL							6C
1		LDW360-28297-19		ZONE BOX INSTL							8B
1		LDW360-28271-1		SYSTEM INSTL							8D
1		LDW360-28258-21		ZONE BOX INSTL							6B
1		LDW360-21294-3		VIB. AMP. INSTL							12B
1		LDW360-21280-3		VIBRATION SYS INSTL							4B
1		LDW360-21266-9		ZONE BOX INSTL							8C
1		LDW360-21253-1		TRANSDUCER INSTL							8B
1		LDW350-52500-1		TIME DELAY INSTL							5B
1		LDW350-52001-1	E	CONT ASSY #3 INSTL	SEE DWG						4B

SYM OR NO.	PROCESS OR FINISH	GRUMMAN SPEC OR MILITARY SPEC	SYM OR NO.	PROCESS OR FINISH	GRUMMAN SPEC OR MILITARY SPEC	SYM OR NO.	PROCESS OR FINISH	GRUMMAN SPEC OR MILITARY SPEC

I & T: IDENTIFICATION AND TRACEABILITY IN ACCORDANCE WITH : NONE

GRUMMAN AIRCRAFT ENGRG CORP, BETHPAGE, L. I., NEW YORK

SIZE	CODE IDENT NO.		
B	26512	LDW280-52508	B
SCALE NONE		SHEET 2.01	

01

NAS 9-1100

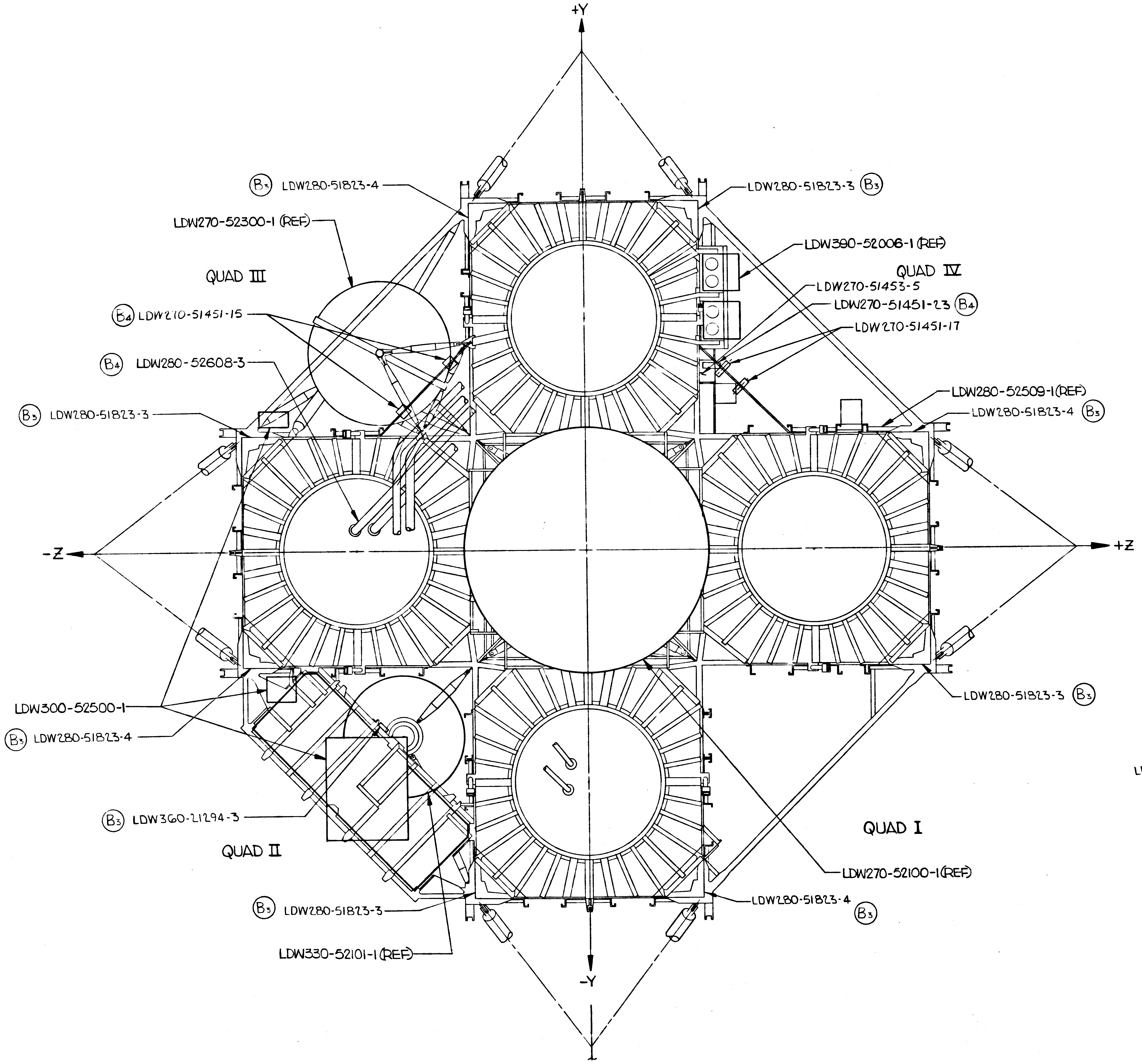
+Y
B3 LDW280-51823-4
LDW280-51823-3 B3
LDW270-52300-1 (REF)
LDW390-52006-1 (REF)
QUAD III
QUAD IV
LDW270-51453-5
B4 LDW270-51451-15
LDW270-51451-23 B4
LDW270-51451-17
B4 LDW280-52608-3
LDW280-52509-1(REF)
B3 LDW280-51823-3
LDW280-51823-4 B3
-Z
+Z
LDW280-51823-3 B3
LDW300-52500-1
B3 LDW280-51823-4
B3 LDW360-21294-3
QUAD I
QUAD II
LDW270-52100-1(REF)
B3 LDW280-51823-3
LDW280-51823-4 B3
LDW330-52101-1(REF)
-Y

VIEW E-E (ZONE 8A)
LOOKING UP

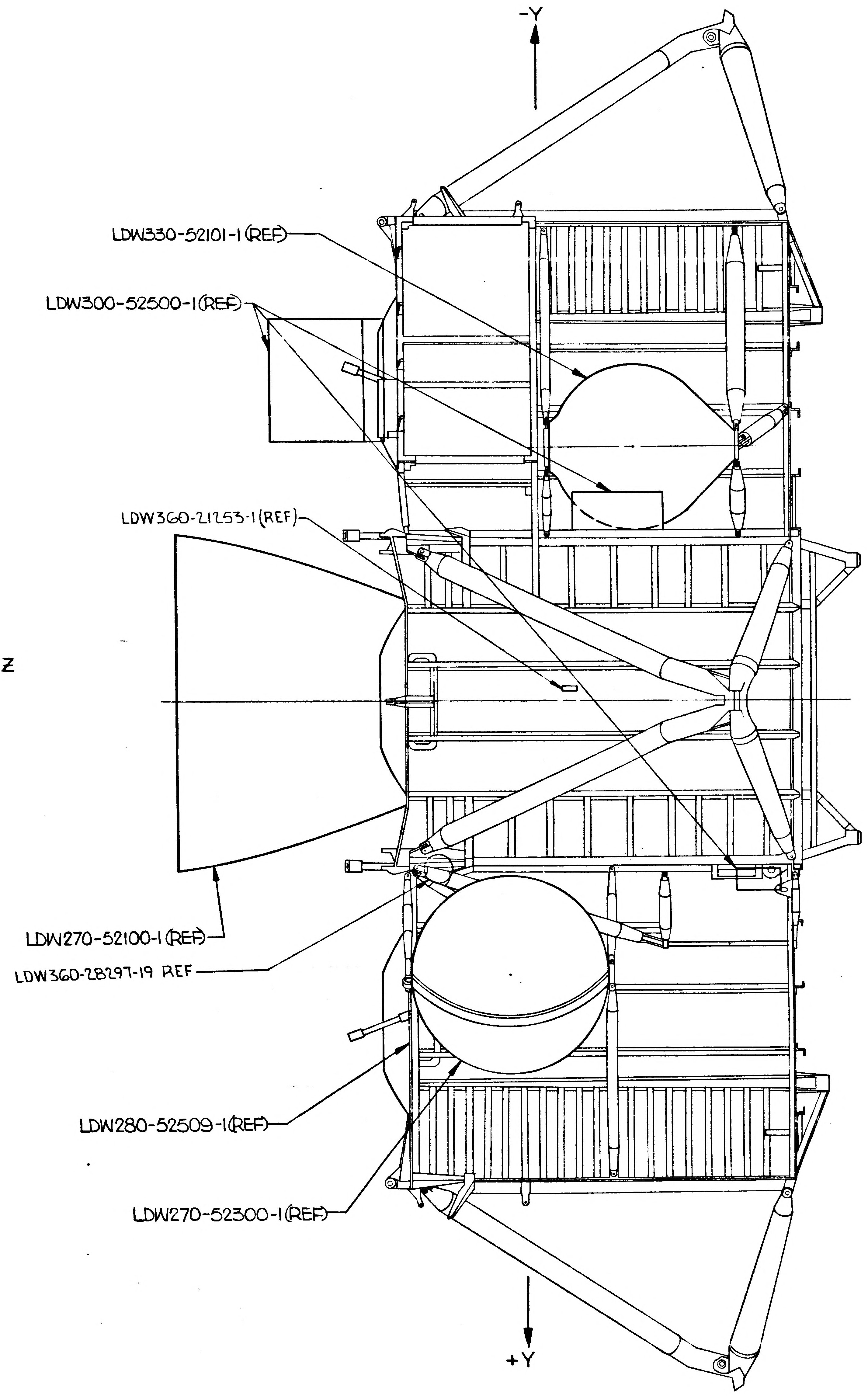
-Y
LDW330-52101-1(REF)
LDW300-52500-1(REF)
LDW360-21253-1(REF)
LDW270-52100-1(REF)
LDW360-28297-19 REF
LDW280-52509-1(REF)
LDW270-52300-1(REF)
+Y

VIEW D-D (ZONE 5D)
LOOKING FWD

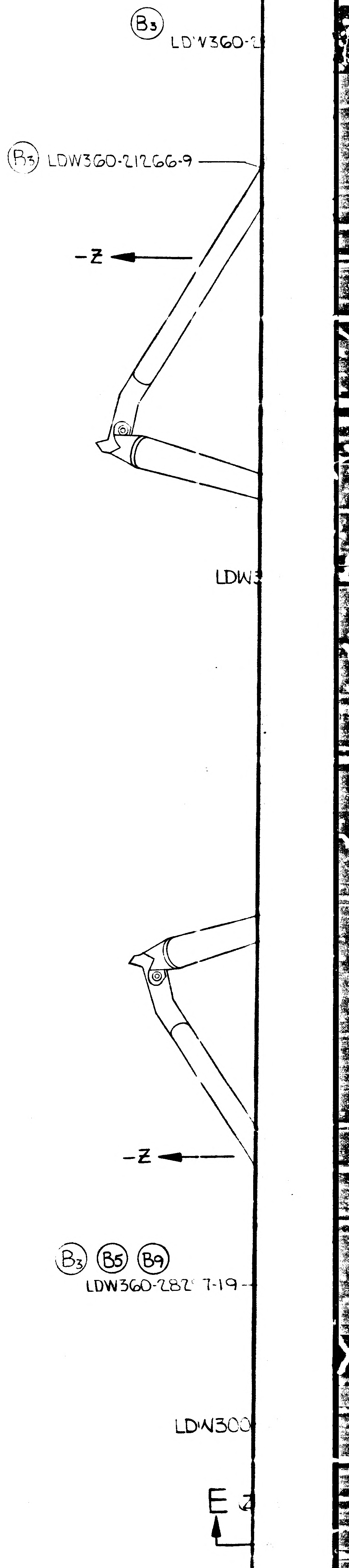
B3 LDW360-
B3 LDW360-21266-9
-Z
LDW3
-Z
B3 B5 B9
LDW360-282 7-19
LDW300
E

01/03 NAS 9-1100

LDW280-52508 SH 3

A (ZONE 7C)

D (ZONE 9A)

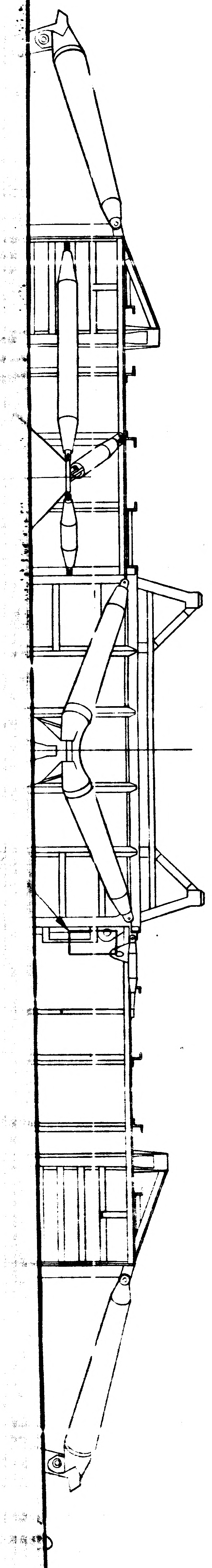

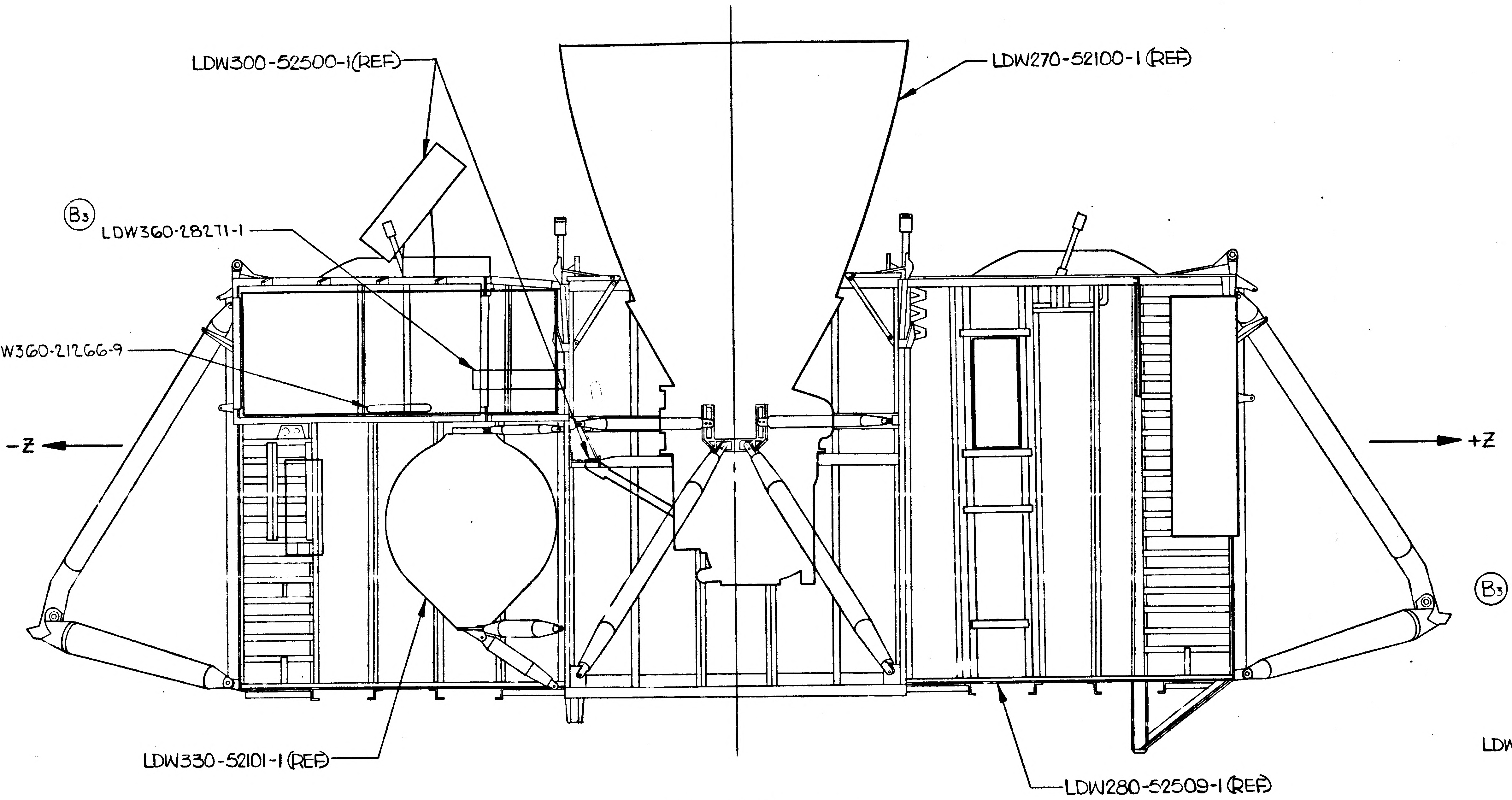
LDW300-52500-1(REF)
LDW270-52100-1(REF)
B3 LDW360-28271-1
B3 LDW360-21266-9
-Z
+Z
LDW330-52101-1(REF)
LDW280-52509-1(REF)

VIEW A-A (ZONE 4D)
LOOKING INBD~LH SIDE

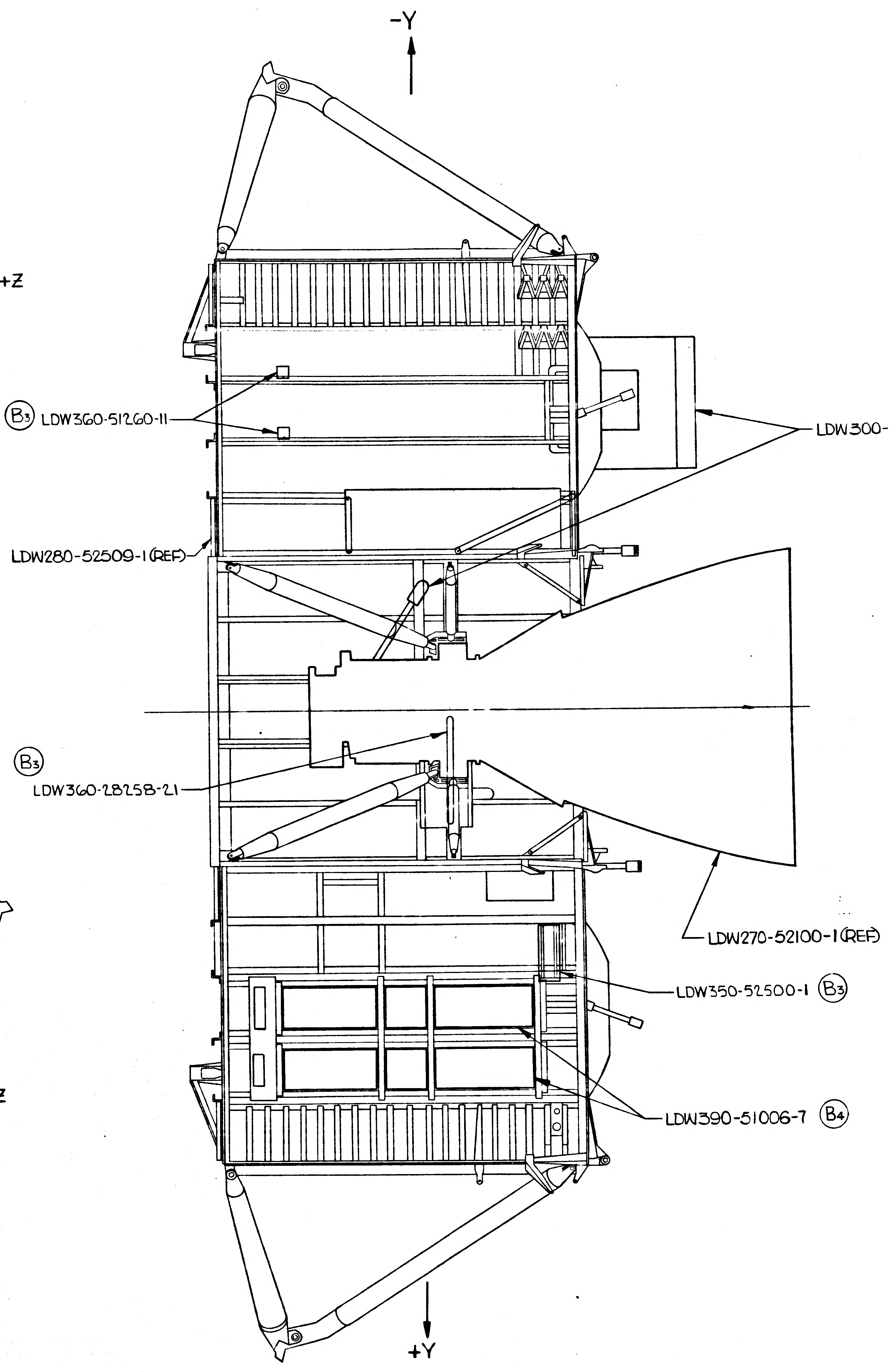
-Y
B3 LDW360-51260-11
LDW300-52500-1(REF)
LDW280-52509-1(REF)
B3 LDW360-28258-21
LDW270-52100-1(REF)
LDW350-52500-1 B3
LDW390-51006-7 B4
+Y

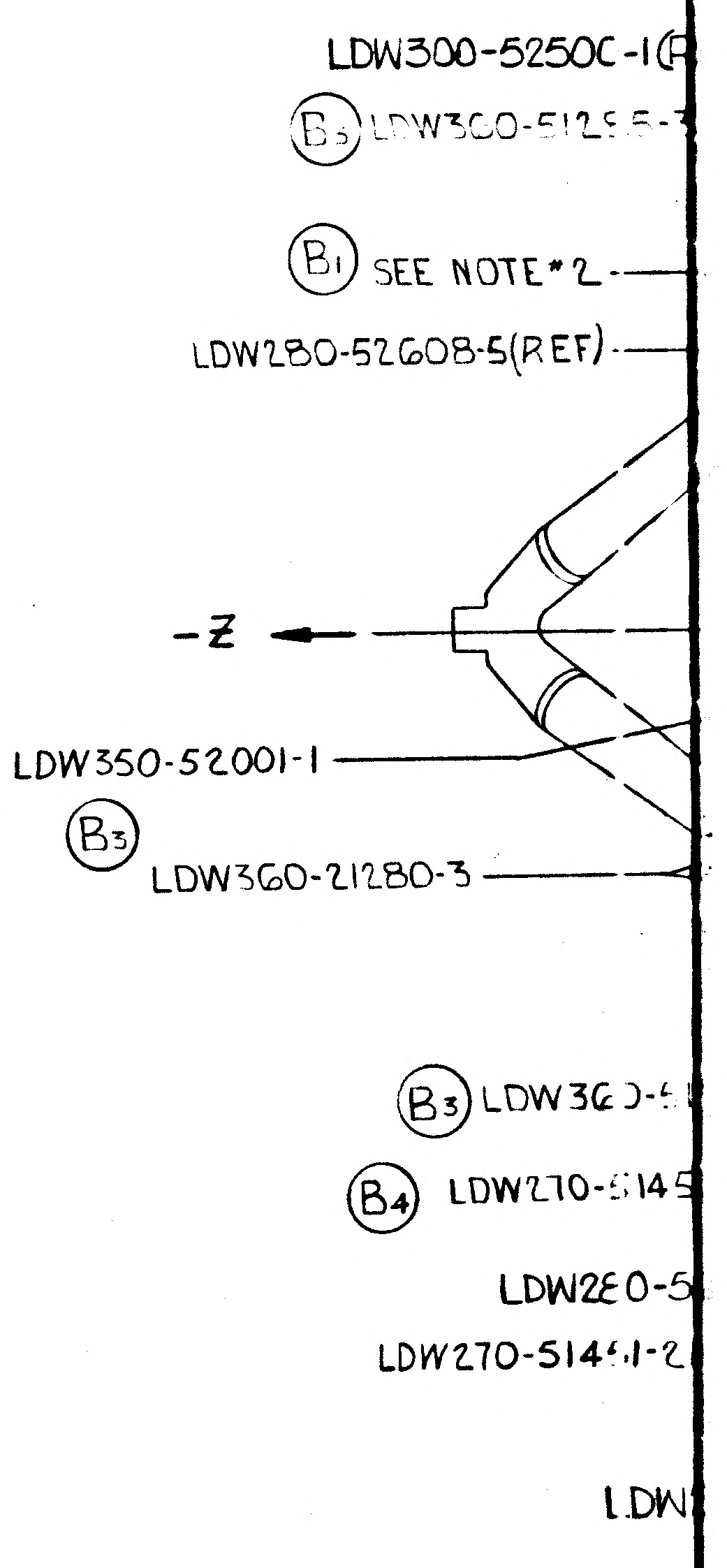
LDW300-52500-1(
B3 LDW360-5125
B1 SEE NOTE*2
LDW280-52608-5(REF)
-Z
LDW350-52001-1
B3 LDW360-21280-3
B3 LDW36
B4 LDW270-5145
LDW280-5
LDW270-5141-2
LDW

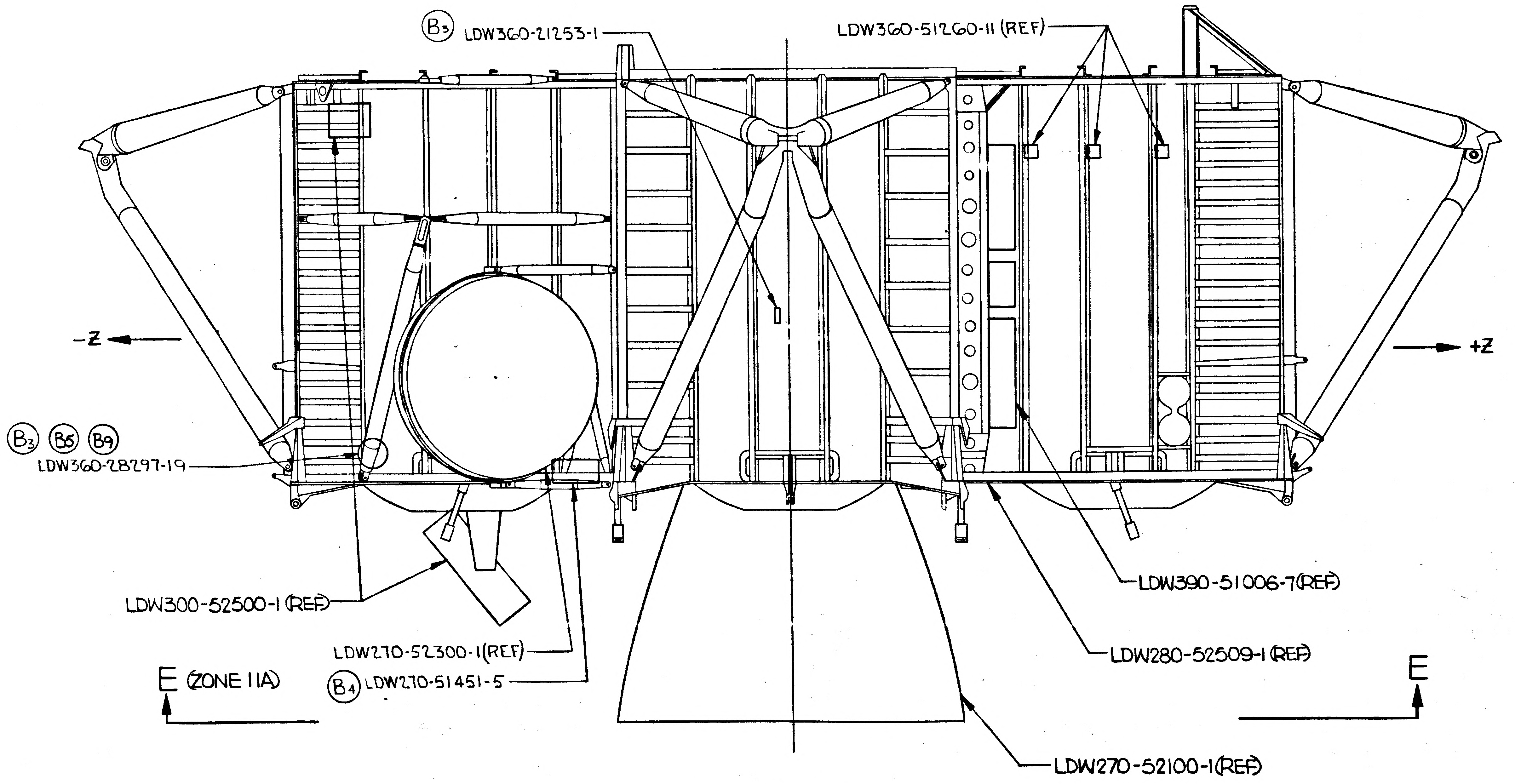
B3 LDW360-21253-1
LDW360-51260-11 (REF)
-Z
+Z
B3 B5 B9
LDW360-28297-19
LDW300-52500-1(REF)
LDW270-52300-1(REF)
B4 LDW270-51451-5
LDW390-51006-7(REF)
LDW280-52509-1(REF)
LDW270-52100-1(REF)

E (ZONE 11A)

E

D

C (ZONE 7A)

VIEW B-B (ZONE 3D)
LOOKING AFT

VIEW C-C (ZONE 4A)
LOOKING INBD~RH SIDE

02/03 NAS 9-1100

W280-52508 SH 3

LDW280-52508 SH 3

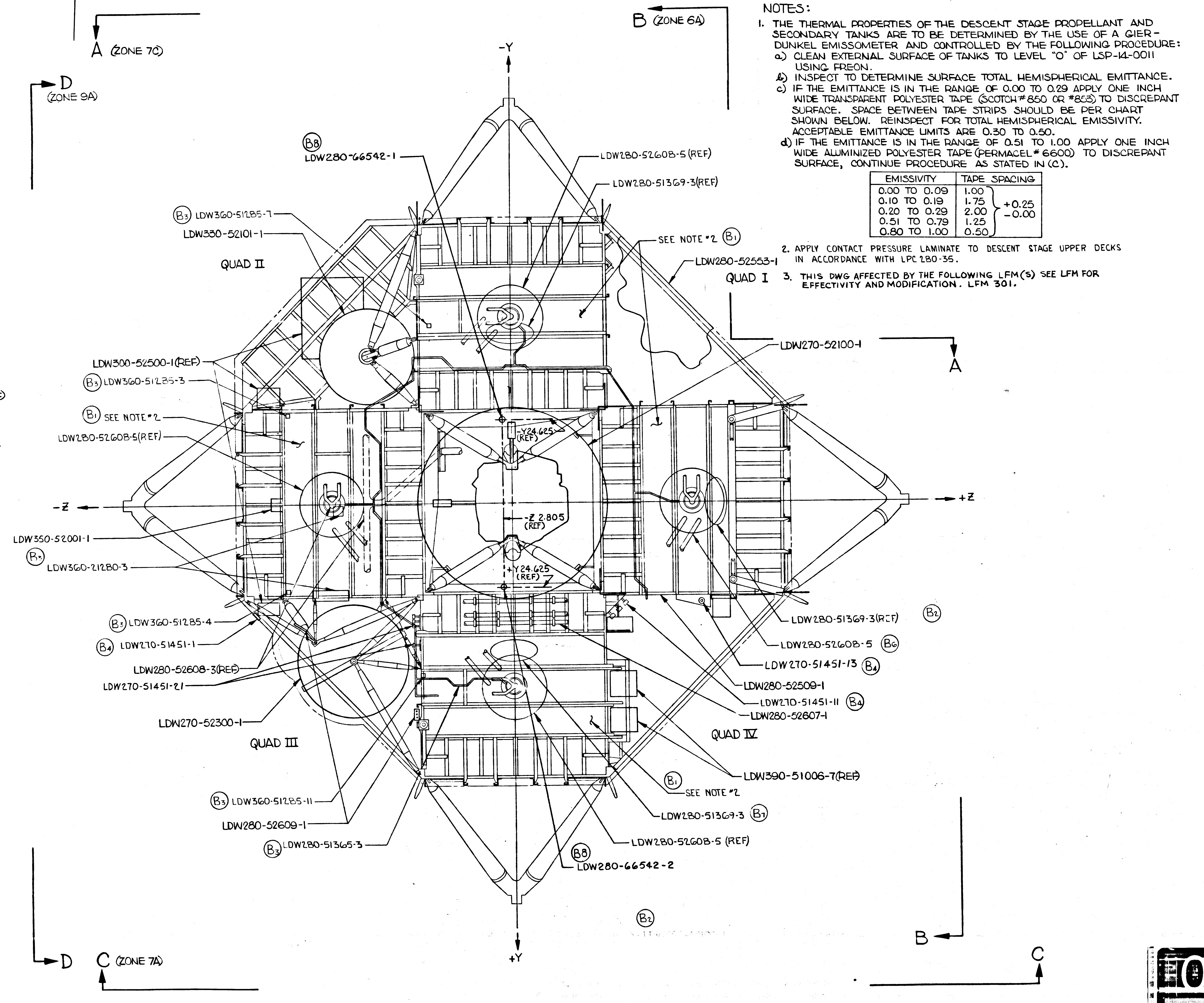
A (ZONE 7C)
D (ZONE 9A)
B (ZONE 6A)
-Y
(B8) LDW280-66542-1
LDW280-52608-5 (REF)
LDW280-51369-3 (REF)
(B3) LDW360-51285-7
LDW330-52101-1
QUAD II
SEE NOTE #2 (B1)
LDW280-52553-1
QUAD I
LDW270-52100-1
A
LDW300-52500-1 (REF)
(B3) LDW360-51285-3
50)-1 (REF)
(B1) SEE NOTE #2
LDW280-52608-5 (REF)
-Y24.625 (REF)
-Z
+Z
-Z 2.805 (REF)
+Y24.625 (REF)
LDW350-52001-1
(B3) LDW360-21280-3
LDW280-51369-3 (REF) (B2)
(B3) LDW360-51285-4
(B4) LDW270-51451-1
LDW280-52608-5 (B6)
LDW280-52608-3 (REF)
LDW270-51451-13 (B4)
LDW270-51451-21
LDW280-52509-1
LDW270-51451-11 (B4)
LDW280-52607-1
LDW270-52300-1
QUAD IV
QUAD III
LDW390-51006-7 (REF)
(B1) SEE NOTE #2
(B3) LDW360-51285-11
LDW280-51369-3 (B7)
LDW280-52609-1
(B3) LDW280-51365-3
LDW280-52608-5 (REF)
(B8) LDW280-66542-2
(B2)
B
+Y
D
C (ZONE 7A)
C

LDW280-52508-1 INSTL
VIEW LOOKING DOWN

NOTES:

1. THE THERMAL PROPERTIES OF THE DESCENT STAGE PROPELLANT AND SECONDARY TANKS ARE TO BE DETERMINED BY THE USE OF A GIER-DUNKEL EMISSOMETER AND CONTROLLED BY THE FOLLOWING PROCEDURE:
   a) CLEAN EXTERNAL SURFACE OF TANKS TO LEVEL "O" OF LSP-14-0011 USING FREON.
   b) INSPECT TO DETERMINE SURFACE TOTAL HEMISPHERICAL EMITTANCE.
   c) IF THE EMITTANCE IS IN THE RANGE OF 0.00 TO 0.29 APPLY ONE INCH WIDE TRANSPARENT POLYESTER TAPE (SCOTCH #850 OR #853) TO DISCREPANT SURFACE. SPACE BETWEEN TAPE STRIPS SHOULD BE PER CHART SHOWN BELOW. REINSPECT FOR TOTAL HEMISPHERICAL EMISSIVITY. ACCEPTABLE EMITTANCE LIMITS ARE 0.30 TO 0.50.
   d) IF THE EMITTANCE IS IN THE RANGE OF 0.51 TO 1.00 APPLY ONE INCH WIDE ALUMINIZED POLYESTER TAPE (PERMACEL # 6600) TO DISCREPANT SURFACE, CONTINUE PROCEDURE AS STATED IN (C).

EMISSIVITY	TAPE SPACING	
0.00 TO 0.09	1.00	+0.25 -0.00
0.10 TO 0.19	1.75	
0.20 TO 0.29	2.00	
0.51 TO 0.79	1.25	
0.80 TO 1.00	0.50	

2. APPLY CONTACT PRESSURE LAMINATE TO DESCENT STAGE UPPER DECKS IN ACCORDANCE WITH LPC 280-35.
3. THIS DWG AFFECTED BY THE FOLLOWING LFM(S) SEE LFM FOR EFFECTIVITY AND MODIFICATION. LFM 301.

MANUFACTURING OPERATIONS
UNLESS OTHERWISE SPECIFIED
NOTES CHECKED √ APPLY TO THIS DWG.

PART NUMBER AND ALL OTHER MARKINGS IN REGION MARKED ⊠ USE BOTH SIDES IF NECESSARY.

FILLET AND INSIDE CORNER RADII TOLERANCES
.016R TO .062R ± .010
.063R TO .250R ± .015
OVER .250R ± .030

DEPTH SHOWN FOR TAPPED HOLES IS FULL THDS. 2-3 IMP THDS. BEYOND PERMISSIBLE.

EXTERNAL THREAD LENGTH SHOWN INCLUDES 2 IMPERFECT THREADS MAX.

DO NOT CADMIUM PLATE & PAINT HOLES OR SURFACES MARKED WITH DOUBLE ASTERISK.

MISMATCH STEP OF ± .005 PERMISSIBLE DUE TO CHANGE OF CUTTERS AT INSIDE INTERSECTING SURFACES.

DIAMETERS MARKED MUST BE CONCENTRIC WITHIN FULL INDICATOR READING

HOLES MUST BE KEPT FREE OF CHROME PLATING SOLUTION.

ALL DIMENSIONS SHOWN TO BE MET AFTER CADMIUM PLATING. THICKNESS OF PLATE .0003 MIN. TO .0005 MAX. MIN. THICKNESS TO BE .0002 ON THREADED AREAS. NO ALLOWANCE FOR PLATING IN HOLES

125 √ SURFACE ROUGHNESS INCLUDING REAMED HOLES PER MIL-STD-10

200 √ FOR ALL DRILLED HOLES

REMOVE ALL BURRS. BREAK ALL EDGES .015-.031

INSPECTION INFORMATION MINIMUM PERMISSIBLE AVERAGE EDGE DISTANCE MARKED IS

SYMBOL √ DENOTES SURFACE TO BE MACHINED

UNLESS OTHERWISE SPECIFIED TOLERANCE ON FLANGES IS ± 1/32

LENGTHS OF AN, NAS & MS AL ALY RIVETS SHORTER THAN 1 INCH ARE NOT SPECIFIED.

TOLERANCE ON LOFTED DELINEATIONS IS

DWG SIZE 34 X 132

PRINTING INFO ONLY
FULL SIZE SHEET AREA (36 X 142) = 35.5 SQ. FT.
1/2 SIZE SHEET AREA (1/4 OF FULL) = 9 SQ. FT.

PRINT TRIM LINE

LDW280-52508 B

03/03

NAS 9-1100

	GRUMMAN AIRCRAFT ENGRG CORP., BETHPAGE, L. I., NEW YORK			
LM	SIZE J	CODE IDENT NO. 26512	LDW280-52508	B
MODEL OR END ITEM	SCALE 1/10		SHEET 3.00	

3FR

W280-52508 SH 3

ENG 32.1 REV 3-66

GRUMMAN AIRCRAFT ENGINEERING CORP.
CODE IDENT NO. 26512
ENGINEERING ORDER

DWG. NO. LDW280-52508 EO NO. C1
CONTROL INFO NO. LDW280B7218

ADD NOTE *

NOTE * THIS DWG AFFECTED BY LFM 363. SEE LFM FOR EFFECTIVITY & MODIFICATION

(* USE NEXT AVAILABLE NOTE NUMBER)

LFM

DETAIL SPEC REQ		CL II ENGRG CHG		CL I ENGRG CHG	✓ LCD 3796. PKG 50 (5)

REASON FOR EO	DESCRIPTION OF EO	EO	GAEC RELEASE
GLYCOL SUPPORT STIFFENING	ADDED NOTE *		VC 2/20/69

MODEL	EFFECTIVITY PROCURING ACTIVITY NO.	GAEC UNIT NO.	SUB CONTR UNIT NO.
LM	LFM363	LM-2(32)	

DRAWING CHANGE REQD: REVISE DWG	RECORD EO	DISPOSITION OF PARTS: REWORK	SCRAP
✓		✓	

APPROVED BY								
DATE	2/20/69			2/20/69	2/20/69		2/21/69	2-21-69
	VDI	SUPPORT	RELIAB. GROUP	GROUP LEADER	STRESS GROUP	LIAISON ENGRG	PROJ ENGRG	

PRIORITY	DRAWING TITLE	DRAWING NO.	EO NO.
C	D/S EQUIP INSTL SUB SYSTEMS	LDW280-52508	C1

CDR 2/20/69
ISSUED BY G.BARNES/P.THORJUSEN X86047 SECTION VDI GROUP NO. 335 PL 25

01

NAS 9-1100

LDW280-52509 B

MODEL OR END ITEM	NEXT ASSY	MODULE OR SER NO.	REQD PER MODULE OR END ITEM
LM	LDW280-52508	LM-2(32)	1
PART NO. LDW280-52509-1		GAEC SCH NO. 501	

WORK PKG FUNCTION NO. 110

SH REV STATUS: FOR DESCRIPTION OF REV SEE SUBQ SH

SHEET	1.00	1.10		2.00	2.01	2.02		3.00
REV	B	B		B	B	B		B
SHEET								
REV								
SHEET								
REV								

LAST SECT LTR USED: E-E

LAST DASH NO. USED: -1

GRUMMAN REL INFO B

PRIM NO. 207 JK(001) MF-14 B-5/11/67

UNLESS OTHERWISE SPECIFIED DIMENSIONS ARE IN INCHES.

TOLERANCE UNLESS SPECIFIED

FRACTIONS - DECIMALS – ANGLES

±1/16 ±.020 ±1/2°

ORIG DWG AUTH

DETAIL SPEC REQUIREMENT

CLASS II ENGRG CHANGE

CLASS I ENGRG CHANGE

CONTRACT NO.

LINE ITEM

DOCUMENTATION TYPE

DRAWN BY	CARSTENSEN 2/16/67	RELIABILITY	
LAYOUT BY	P. WEISS		
CHECKED BY	JB 2-20-67		
GP LEADER	3/13/67		
VEH. DES. INT	4/10/67		
STRUCTURES		PROJ ENGR	D.A. McCloughan 5/10/67
STRUCTURES	4/10	REL GROUP	
WEIGHTS			

GRUMMAN AIRCRAFT ENGRG CORP
BETHPAGE, L. I., NEW YORK

SUPPORTS INSTL
DESCENT STAGE
SUB SYSTEMS COMPONENTS

SIZE B

CODE IDENT NO. 26512

LDW280-52509 B ⑬

SCALE NONE

SHEET 1.00 OF 6

G 77 1 12-65

01

NAS 9-1100

REVISIONS FOR CONTINUATION OF REVISIONS SEE SHEET

CHANGE LTR	ITEM NO.	SHEET NO.	ZONE	GRUMMAN INFO ONLY	DET SPEC	CLASS I	CLASS II	ENGRG ORDER	DESCRIPTION	EFFECTIVITY	DISPOSITION OF EXISTING PARTS REWORK	DISPOSITION OF EXISTING PARTS SCRAP	CHANGED BY AND DATE	ENGRG APPD	~~CONF~~ APPD
A	1		4A					EO A1	ADDED SH 1.10 EOA1 INITIAL DRAWING RELEASE PARTS MADE PER EO.	LM-2 & -3	NOT	REQ'D	P. CARSTENSEN 2-11-1967		
	2	1.00 & 1.10						EO A2	IN N/A BLOCK FOR-1 REMOVE LM-3(33) EFF.	LM-3	✓				
	3	2.01 & 3.00	11D					LEO280-200	FOR-1 ADDED LDW280-23610-3(1) REPLACING LDW280-23610-1(1)	LM-2					
	4	2.02 & 3.00	5C, D					EO A4	ON-1 ADDED LDW280-52807-1 & -3.						
	5	2.01 & 3.00	11D					EO A5	ON-1 ADDED LDW280-23610-7(1) & REMOVED LDW280-23610-3(1)						
B	1	2.00 & 3.00	3C					EO B1	IN FLD/DWG & B/M FOR-1 INSTL LDW280-28711-1-1(WAS) LDW280-28711-1.						
	2		3B					EO B2	ON-1 ADDED LDW280-23555-3						
	3	2.01 & 3.00	12C					EO B3	IN FLD & B/M FOR -1, LDW280-28697-3 (WAS)-1 & LDW280-23680-3 (WAS) -1						
	4							EO B4	ON-1 ADDED LDW280-51836-1 (1 REQ'D)						
	5	2.02 & 3.00	4A 5A					EO B5	FOR-1 ADDED LDW280-28780-2(4 REQ'D) LDW280-28780-1 4 REQ'D(WAS) 1 REQ'D.						
	6	2.00 & 3.00	3C					LEO280-413	ON-1 INSTL REMOVED LDW280-28711-1						
	7	2.02 & 3.00	3C					EO B7	THIS EO CANCELS EO B4. ON-1 IN B/M & F/D: ADDED LDW280-51836-3 (1).						
	8	2.00, 2.01 2.02 & 3.00	3C 4D,5C 10B					EO B8	FOR-1, IN FLD & B/M, DELETED LDW280-28711-1-1 & LDW280-28723-1, ADDED LDW280-52723-1,-1-1,-2 & -2-2, LDW280-23631-3 (WAS) -1.						
	9	2.00 & 3.00	5A, D					EO B9	ADDED LDW280-52627-1 & -2 (1EA REQ'D/MOD) TO -1 INSTL.		NOT	REQ'D			
	10	2.01 & 3.00	3B						ON-1 ADDED LDW280-28690-2 & NOTE 1.		✓				
	11	2.00, 2.01 & 3.00	10A 10B					A+B (1)	IN F/D & B/M ON-1 INSTL LDW280-52543-1(WAS)LDW280-23543-1, LDW280-23700-9 (WAS)LDW280-23700-1 & LDW280-23542-5 (WAS) LDW280-23542-1	NOT REQD	NOT	REQD	J. BIANCHINO 3-14-67	Dam 5/11/67	

CHG APPROVED

LTR	~~GROUP LDR~~	VEH DES INT	STRUCTURES	STRUCTURES	WEIGHTS	RELIABILITY				
B		JHS 3/13/67	WJH 3/14/67							

GRUMMAN AIRCRAFT ENGRG CORP., BETHPAGE, L. I., NEW YORK

SIZE	CODE IDENT NO.		
B	26512	LDW280-52509	B

SCALE NONE SHEET 1.10

ENG 77.16 3-66

01

NAS 9-1100

QTY PER ASSEMBLY						-1	CODE IDENT	PART NO.	I&T	NOMENCLATURE OR DESCRIPTION	MATERIAL	[redacted]	[redacted]	[redacted]	PROCESS SYM	FINISH NO.	ZONE
						1		LDW280-52627-2	E	SHIELD INSTL	SEE DWG	METEOROID PROTECTION (REF)					5A
						1		LDW280-52627-1		SHIELD INSTL		METEOROID PROTECTION (REF)					5D
						1		LDW280-23598-1		SUPT INSTL		S-BAND CANNISTER (REF)					10C
						1		LDW280-23597-1		BRACKET INSTL		LUNAR SURF EXT POWER CONN (REF)					8C
						1		LDW280-23595-1		SUPT INSTL		INTERSTAGE UMBILICAL (REF)					5B
						1		LDW280-23593-1		BRACKET INSTL		H_2O MEASUREMENT (REF)					5C
						1		LDW280-23591-1		SUPT INSTL		LANDING RADAR E.R.A (REF)					6A
						1		LDW280-23590-1		SUPT INSTL		He PRESSURE MODULE (REF)					6B
						1		LDW280-23588-1		SUPT INSTL		REMOVABLE B.H.S.(REF)					11A
						1		LDW280-52587-1		BRACKET INSTL		He DIST O_2 & H_2O (REF)					5B
						1		LDW280-23585-1		SUPT INSTL		PLSS BATTERY (REF)					4D
						1		LDW280-23580-1		TRUSS INSTL		He TANK SUPT (REF)					5B
						1		LDW280-23573-1		CHOCK INSTL		LANDING GEAR (REF)					11B
						1		LDW280-23572-1		SUPT INSTL		HEAT EXCHANGER (REF)					6B
						1		LDW280-23567-1		SUPT INSTL		S-BAND ANTENNA (REF)					4C
						1		LDW280-23566-1		SUPT INSTL		LANDING RADAR (REF)					12B
						1		LDW280-23565-1		TRUSS INSTL		O_2 TANK SUPT (REF)					5B
						1		LDW280-23563-1		TRUSS INSTL		H_2O TANK SUPT(REF)					5C
						1		LDW280-23555-3		BRACKET INSTL		APEX. ANTENNA SWITCH SUPT(REF)					5A
						1		LDW280-23545-1		TRUSS INSTL		ENGINE SUPT (REF)					4B
						1		LDW280-23555-1		BRACKET INSTL		APEX. ANTENNA SWITCH SUPT(REF)					4A
						1		LDW280-23544-1		DECK INSTL							12C
						1		LDW280-52543-1		DECK INSTL							10C
						1		LDW280-23542-5		DECK INSTL							11A
						1		LDW280-52541-1		DECK INSTL							11D
						1		LDW280-52510-1		STRUCTURAL ASSY	SEE DWG						4B
								LDW280-52509-1	E	SUPPORTS INSTL					NONE	NONE	4A

SYM OR NO.	PROCESS OR FINISH	GRUMMAN SPEC OR MILITARY SPEC	SYM OR NO.	PROCESS OR FINISH	GRUMMAN SPEC OR MILITARY SPEC	SYM OR NO.	PROCESS OR FINISH	GRUMMAN SPEC OR MILITARY SPEC

I & T: IDENTIFICATION AND TRACEABILITY IN ACCORDANCE WITH : NONE

GRUMMAN AIRCRAFT ENGRG CORP, BETHPAGE, L. I., NEW YORK

SIZE	CODE IDENT NO.		
B	26512	LDW280-52509	B

⑮

SCALE NONE

SHEET 2.00

ENG 77.2 7-65

01

NAS 9-1100

QTY PER ASSEMBLY -1	PART NO.	I&T	CODE IDENT	NOMENCLATURE OR DESCRIPTION	MATERIAL	[redacted]	[redacted]	[redacted]	PROCESS SYM	FINISH NO.	ZONE
1	LDW280-23722-1	E		STRAP INSTL	SEE DWG	DIAG. TEE BRACING (REF)					9B
1	LDW280-52701-1			SUPT INSTL		PRESS TRANSDUCER (REF)					4C
1	LDW280-23700-9			SHIELD INSTL		PROPELLANT TANK (REF)					10C
1	LDW280-28699-1			SUPT INSTL		OXIDIZER TANK (REF)					5B
1	LDW280-28698-1			SUPT INSTL		PRESS & TEMP (REF)					3C
1	LDW280-28697-3			SUPT INSTL		He REG MANIFOLD (REF)					5C
1	LDW280-23694-1			BRACKET INSTL		ENG. DRAIN & BLEED LINES SUPT. (REF)					10C
1	LDW280-28692-1			SUPT INSTL		SEPARATION MONITOR (REF)					5D
1	LDW280-28690-2			SUPT INSTL		SEPARATION MONITOR (REF)					3B
1	LDW280-28690-1			SUPT INSTL		SEPARATION MONITOR (REF)					3C
1	LDW280-23685-1			SUPT INSTL		ELEC UMBILICAL GUIL					4B
1	LDW280-23680-3			BRACKET INSTL		S/C He, SQUIB TEST PTS. & LINES SUPT (REF)					12C
1	LDW280-52678-1			SUPT INSTL		TIME DELAY (REF)					7C
1	LDW280-23677-1			SUPT INSTL		ENG. COMP. PROP. & DRAIN LINES (REF)					4A
1	LDW280-52660-1			STANDOFF INSTL		THERMAL SHIELD (REF)					10B
1	LDW280-52659-1			SHIELD INSTL		R.H. THERMAL (REF)					4A
1	LDW280-51658-1					AFT THERMAL (REF)					5B
1	LDW280-51657-1					L.H. THERMAL (REF)					4D
1	LDW280-52656-1			SHIELD INSTL		FWD THERMAL (REF)					3B
1	LDW280-23610-7			SUPT INSTL		PROPELLANT LINES (REF)					11C
1	LDW280-23637-1			TRUSS INSTL		AMB. He TANK SUPT (REF)					5B
1	LDW280-52636-1			NUT PLATE INSTL		SCIENTIFIC EQUIPT. BAY LANDING RADAR					5C
1	LDW280-52635-1			BLAST DEFLECTOR		ENGINE (REF)					5B
1	LDW280-23632-1			SUPT INSTL		PROPELLANT QTY CONT UNIT (REF)					7C
1	LDW280-23631-3			SUPT INSTL		GOX MODULE (REF)					10B
1	LDW280-23630-1			SUPT INSTL		FUEL VENT COUPLING (REF)					10B
1	LDW280-23629-1	E		SUPT INSTL	SEE DWG	DECCA (REF)					10B

SYM OR NO.	PROCESS SYM OR FINISH NO.	GRUMMAN SPEC OR MILITARY SPEC	SYM OR NO.	PROCESS SYM OR FINISH NO.	GRUMMAN SPEC OR MILITARY SPEC	SYM OR NO.	PROCESS SYM OR FINISH NO.	GRUMMAN SPEC OR MILITARY SPEC

I & T: IDENTIFICATION AND TRACEABILITY IN ACCORDANCE WITH NONE

GRUMMAN AIRCRAFT ENGRG CORP., BETHPAGE, L. I., NEW YORK

SIZE B
CODE IDENT NO. 26512
LDW280-52509 B
SCALE NONE
SHEET 2.01

ENG 77.2 5-64

01

NAS 9-1100

QTY PER ASSEMBLY -1	PART NO.	I&T	CODE IDENT	NOMENCLATURE OR DESCRIPTION	MATERIAL	[redacted]	[redacted]	[redacted]	PROCESS SYM	FINISH NO.	ZONE
1	LDW280-52900-1	E		TANK INSTL	SEE DWG	PROPELLANT (REF)					10B
1	LDW280-51836-3			SUPT INSTL		FITH INSTRUMENTATION (REF)					3C
1	LDW280-52807-3			STANDOFF INSTL		SCIENTIFIC EQUIPT. BAY END CLOSURE (REF)					5D
1	LDW280-52807-1			STANDOFF INSTL		SCIENTIFIC EQUIPT. BAY END CLOSURE (REF)					5C
1	LDW280-28788-1			CLAMP INSTL		ZONE BOX (REF)					7B
8	LDW280-28781-1			FORMER INSTL		LWR OUTRIGGER (REF)					11D
4	LDW280-28780-2			FORMER INSTL		UPR OUTRIGGER (REF)					4A
4	LDW280-28780-1			FORMER INSTL		UPR OUTRIGGER (REF)					5A
1	LDW280-52725-1			STANDOFF INSTL		S.E.Q (REF)					12B
1	LDW280-52723-2-2			FITTING INSTL		UPR. DIAG. THERMAL SHIELD (REF)					5A
1	-2										4B
1	-1-1										5C
1	LDW280-52723-1	E		FITTING INSTL	SEE DWG	UPR. DIAG. THERMAL SHIELD (REF)					4D

SYM OR NO.	PROCESS SYM OR FINISH NO.	GRUMMAN SPEC OR MILITARY SPEC	SYM OR NO.	PROCESS SYM OR FINISH NO.	GRUMMAN SPEC OR MILITARY SPEC	SYM OR NO.	PROCESS SYM OR FINISH NO.	GRUMMAN SPEC OR MILITARY SPEC

I & T: IDENTIFICATION AND TRACEABILITY IN ACCORDANCE WITH NONE

GRUMMAN AIRCRAFT ENGRG CORP., BETHPAGE, L. I., NEW YORK

SIZE	CODE IDENT NO.		
B	26512	LDW280-52509	B
SCALE NONE		SHEET 2.02	

⑲

ENG 77.2 5-64

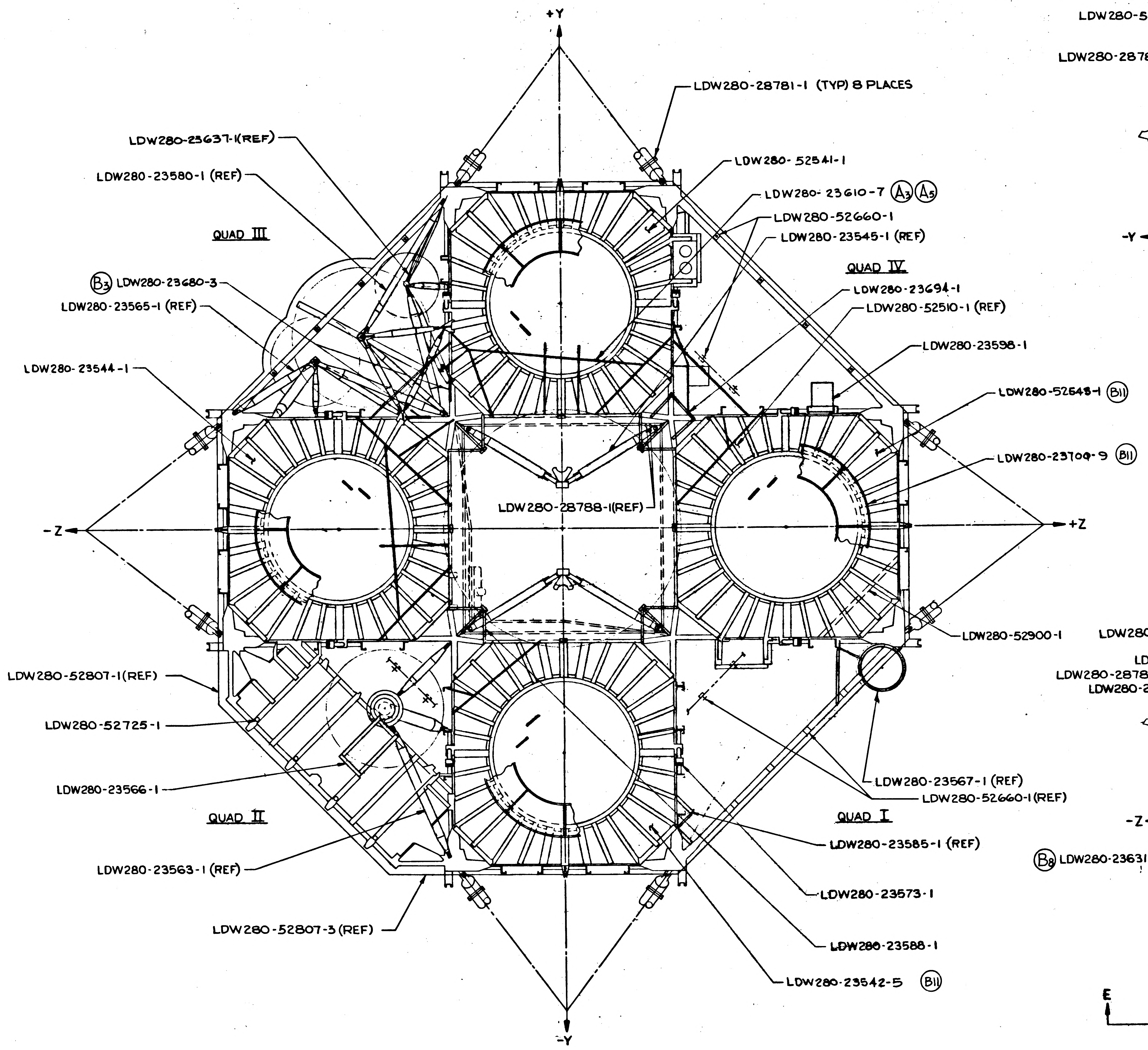
+Y
LDW280-28781-1 (TYP) 8 PLACES
LDW280-23637-1(REF)
LDW280-52541-1
LDW280-23580-1 (REF)
LDW280-23610-7 A3 A5
LDW280-52660-1
LDW280-23545-1 (REF)
QUAD III
QUAD IV
B3 LDW280-23680-3
LDW280-23694-1
LDW280-23565-1 (REF)
LDW280-52510-1 (REF)
LDW280-23598-1
LDW280-23544-1
LDW280-52648-1 B11
LDW280-23709-9 B11
LDW280-28788-1(REF)
-Z
+Z
LDW280-52900-1
LDW280-52807-1(REF)
LDW280-52725-1
LDW280-23567-1 (REF)
LDW280-52660-1(REF)
LDW280-23566-1
QUAD II
QUAD I
LDW280-23585-1 (REF)
LDW280-23563-1 (REF)
LDW280-23573-1
LDW280-52807-3 (REF)
LDW280-23588-1
LDW280-23542-5 B11
-Y

VIEW E-E
LOOKING UP

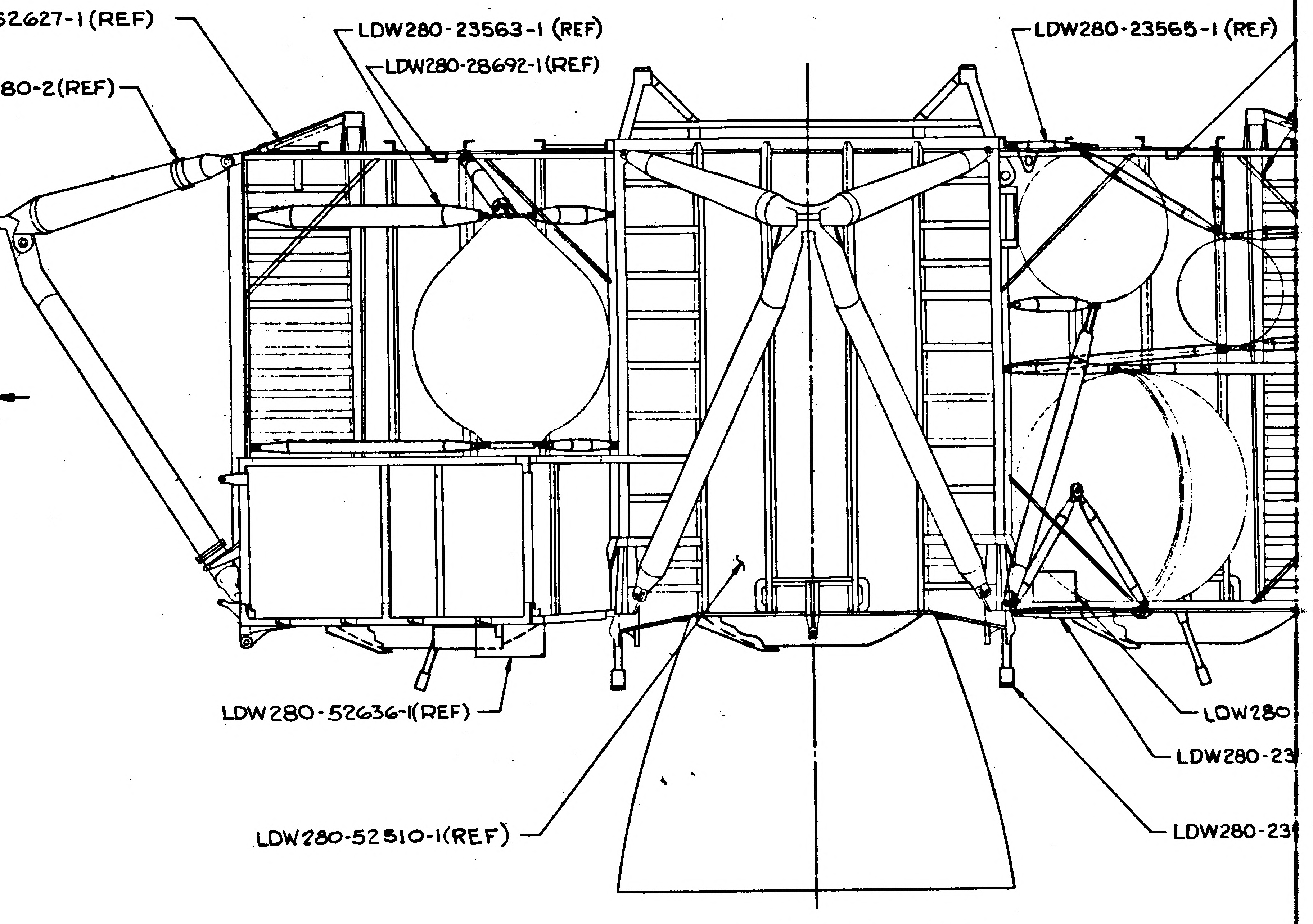
LDW280-52627-1(REF)
LDW280-28780-2(REF)
LDW280-23563-1 (REF)
LDW280-28692-1(REF)
LDW280-23565-1 (REF)
-Y
LDW280-52636-1(REF)
LDW280-52510-1(REF)
LDW280-
LDW280-23
LDW280-23

VIEW D-D (ROTATED 90° CCW)
LOOKING FWD

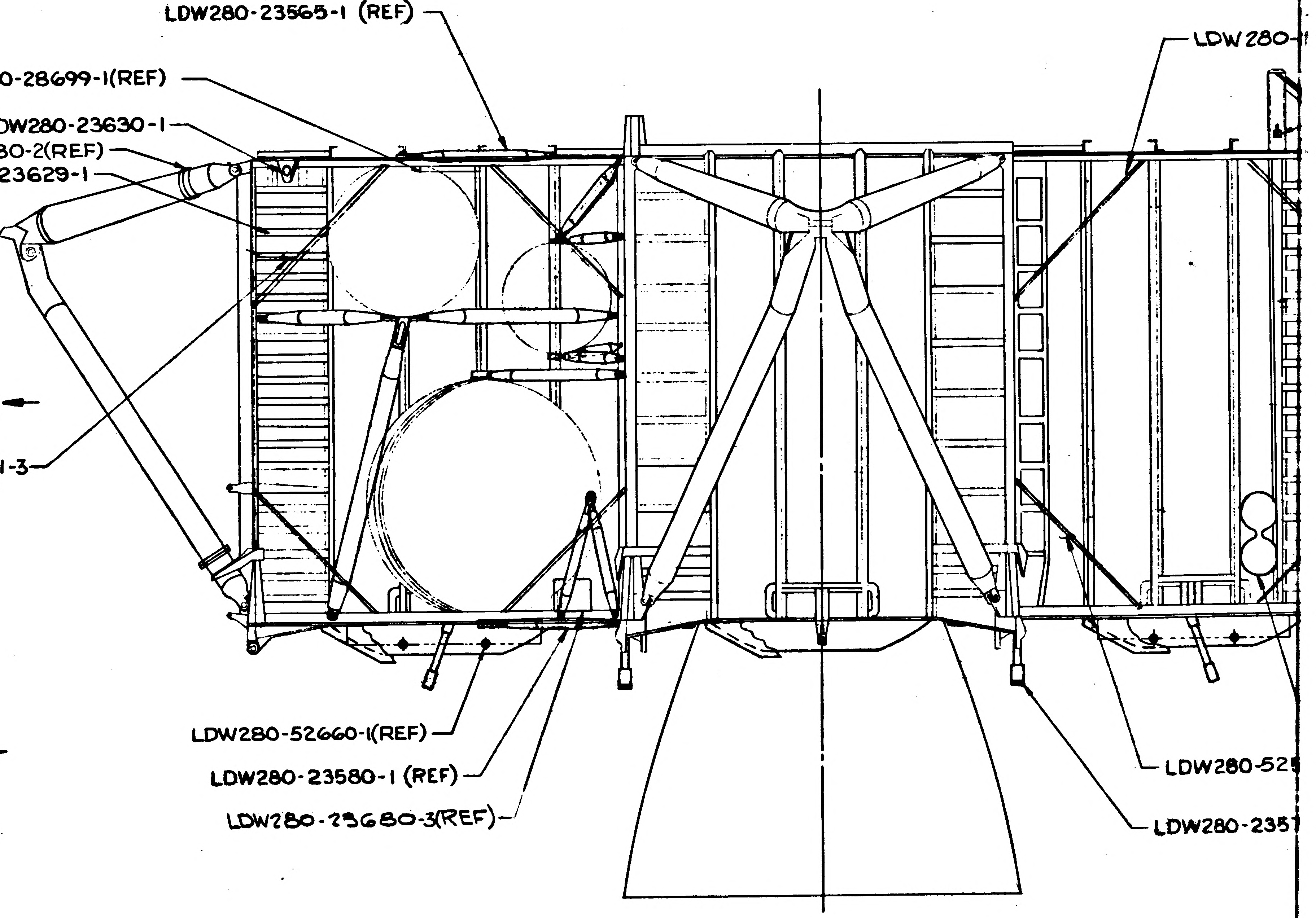
LDW280-23565-1 (REF)
LDW280-28699-1(REF)
LDW280-23630-1
LDW280-28780-2(REF)
LDW280-23629-1
LDW280-
-Z
B8 LDW280-23631-3
E
LDW280-52660-1(REF)
LDW280-23580-1 (REF)
LDW280-23680-3(REF)
LDW280-52
LDW280-2357

VIEW C-C
LOOKING INBD - RH SIDE

01/04

NAS 9-1100

LDW280-52509 SH 3

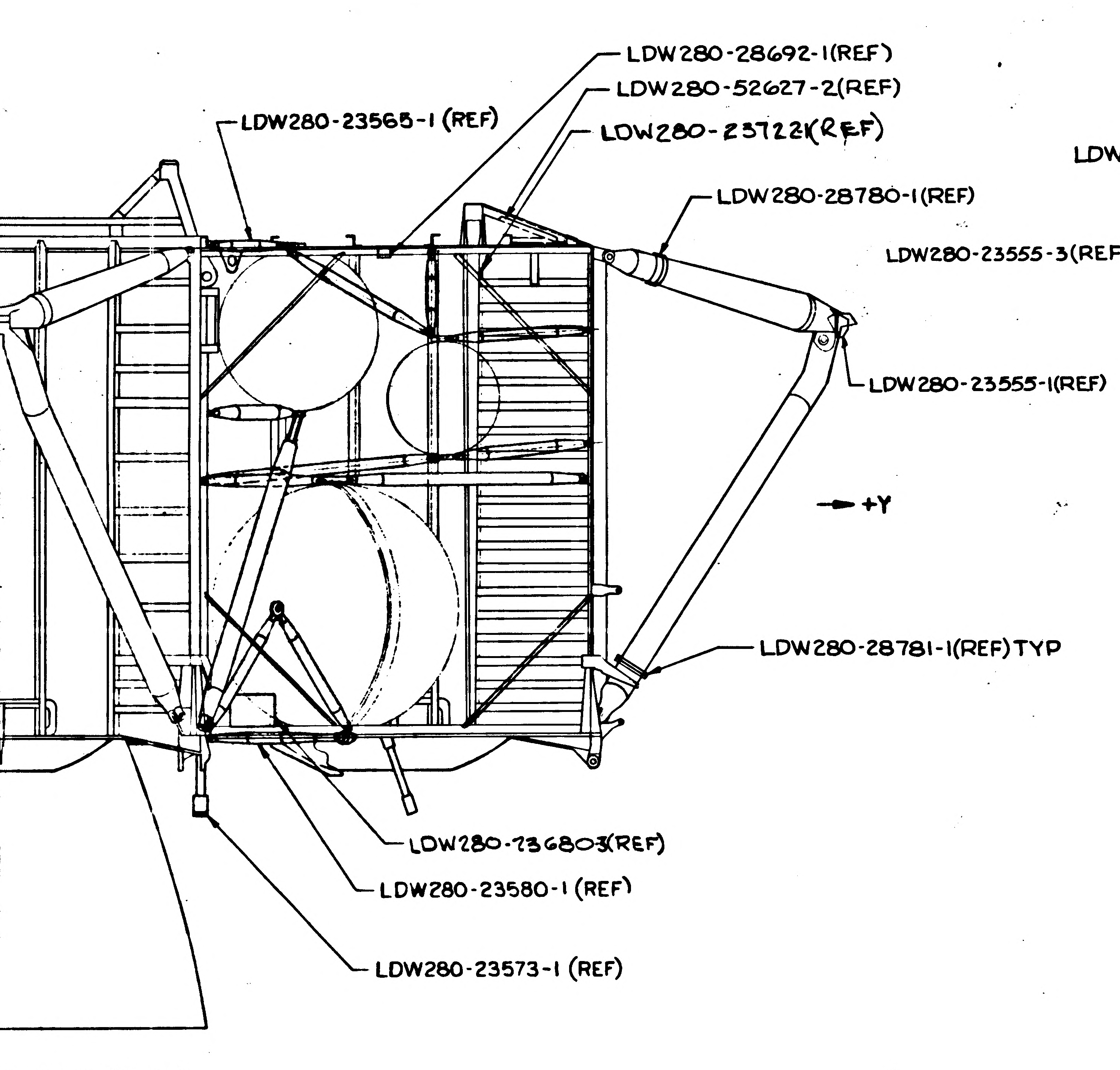
LDW280-28692-1(REF)
LDW280-52627-2(REF)
LDW280-23722(REF)
LDW280-23565-1 (REF)
LDW280-28780-1(REF)
LDW280-23555-1(REF)
+Y
LDW280-28781-1(REF) TYP
LDW280-23680-3(REF)
LDW280-23580-1 (REF)
LDW280-23573-1 (REF)

TATED 90° CCW)
NG FWD

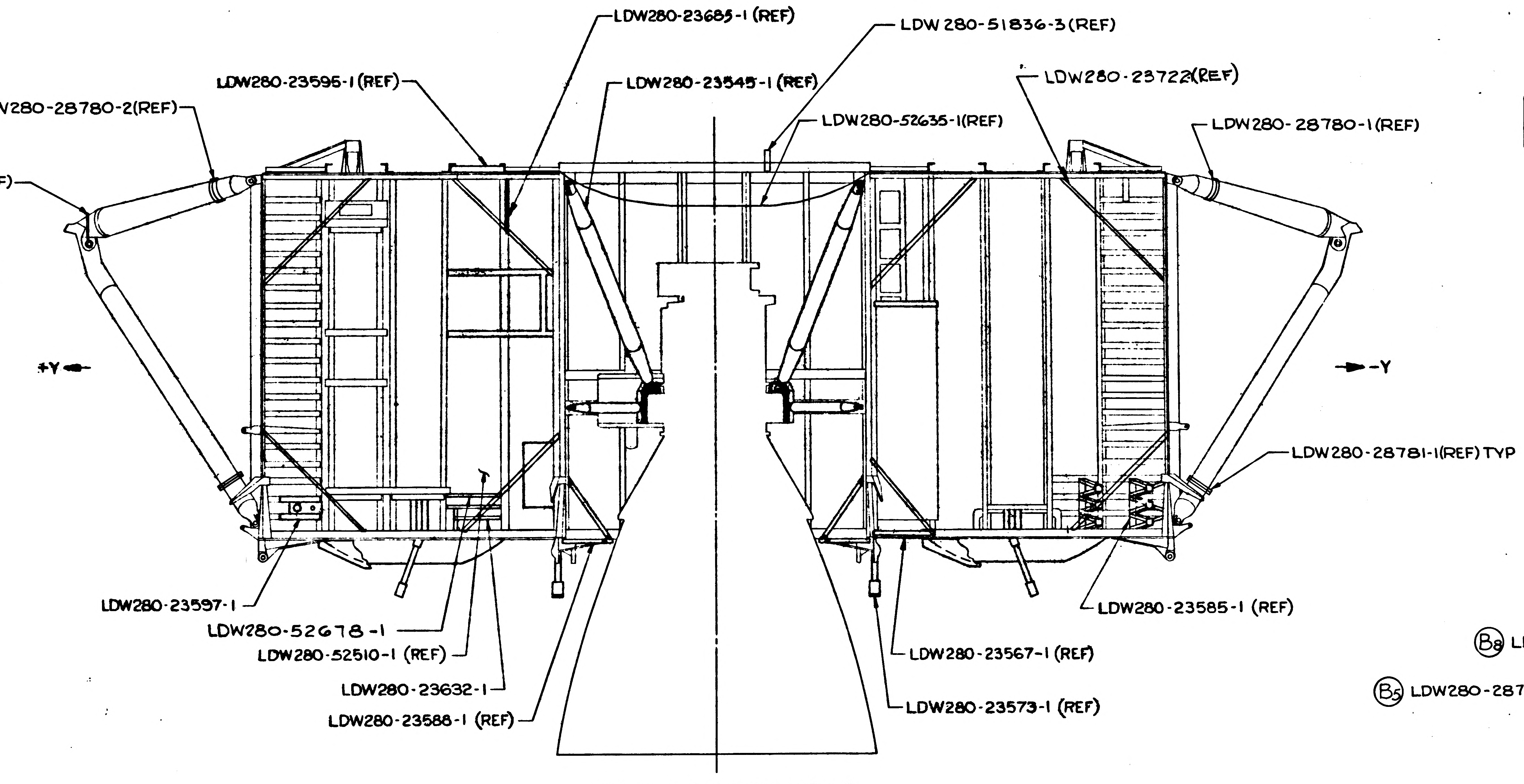
LDW280-23685-1 (REF)
LDW280-51836-3 (REF)
LDW280-23595-1 (REF)
LDW280-23545-1 (REF)
LDW280-23722(REF)
LDW280-28780-2(REF)
LDW280-52635-1(REF)
LDW280-28780-1(REF)
LDW280-23555-3(REF)
+Y
-Y
LDW280-28781-1(REF) TYP
LDW280-23597-1
LDW280-52678-1
LDW280-52510-1 (REF)
LDW280-23632-1
LDW280-23588-1 (REF)
LDW280-23585-1 (REF)
LDW280-23567-1 (REF)
LDW280-23573-1 (REF)

VIEW B-B (ROTATED 90° CW)
LOOKING AFT

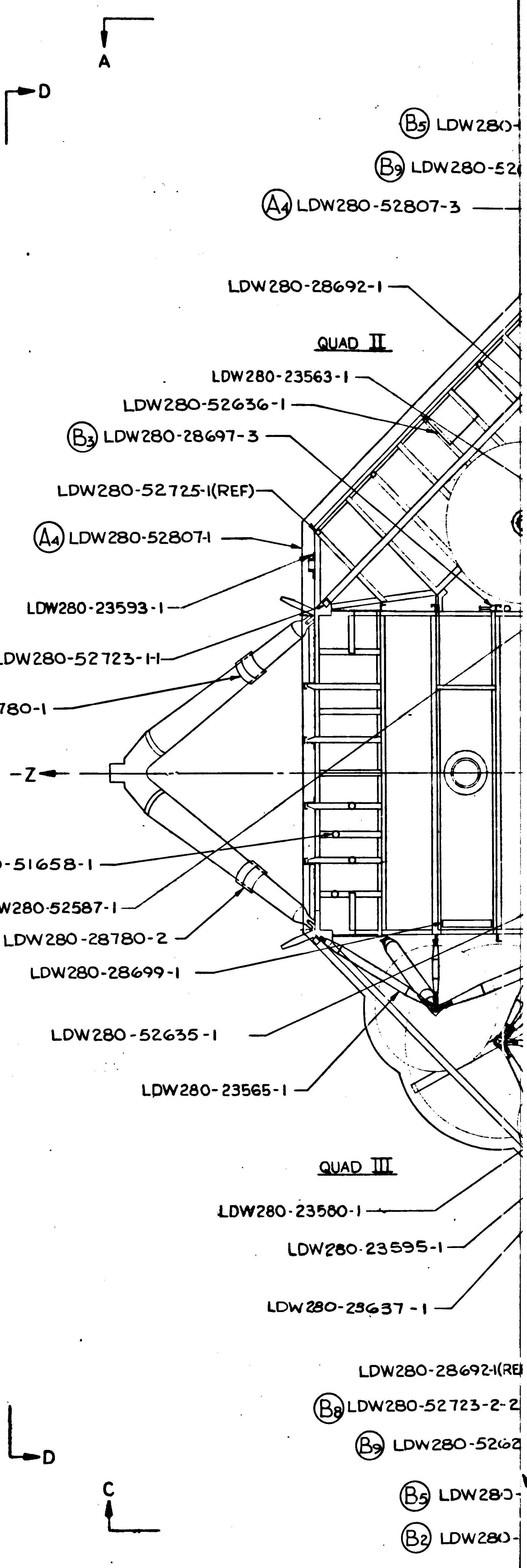
A
D
B5 LDW280-
B9 LDW280-52
A4 LDW280-52807-3
LDW280-28692-1
QUAD II
LDW280-23563-1
LDW280-52636-1
B3 LDW280-28697-3
LDW280-52725-1(REF)
A4 LDW280-52807-1
LDW280-23593-1
B8 LDW280-52723-1-1
B5 LDW280-28780-1
-Z
LDW280-51658-1
LDW280-52587-1
B5 LDW280-28780-2
LDW280-28699-1
LDW280-52635-1
LDW280-23565-1
QUAD III
LDW280-23580-1
LDW280-23595-1
LDW280-23637-1
LDW280-28692-1(RE
B8 LDW280-52723-2-2
B9 LDW280-5262
D
C
B5 LDW280-
B2 LDW280-

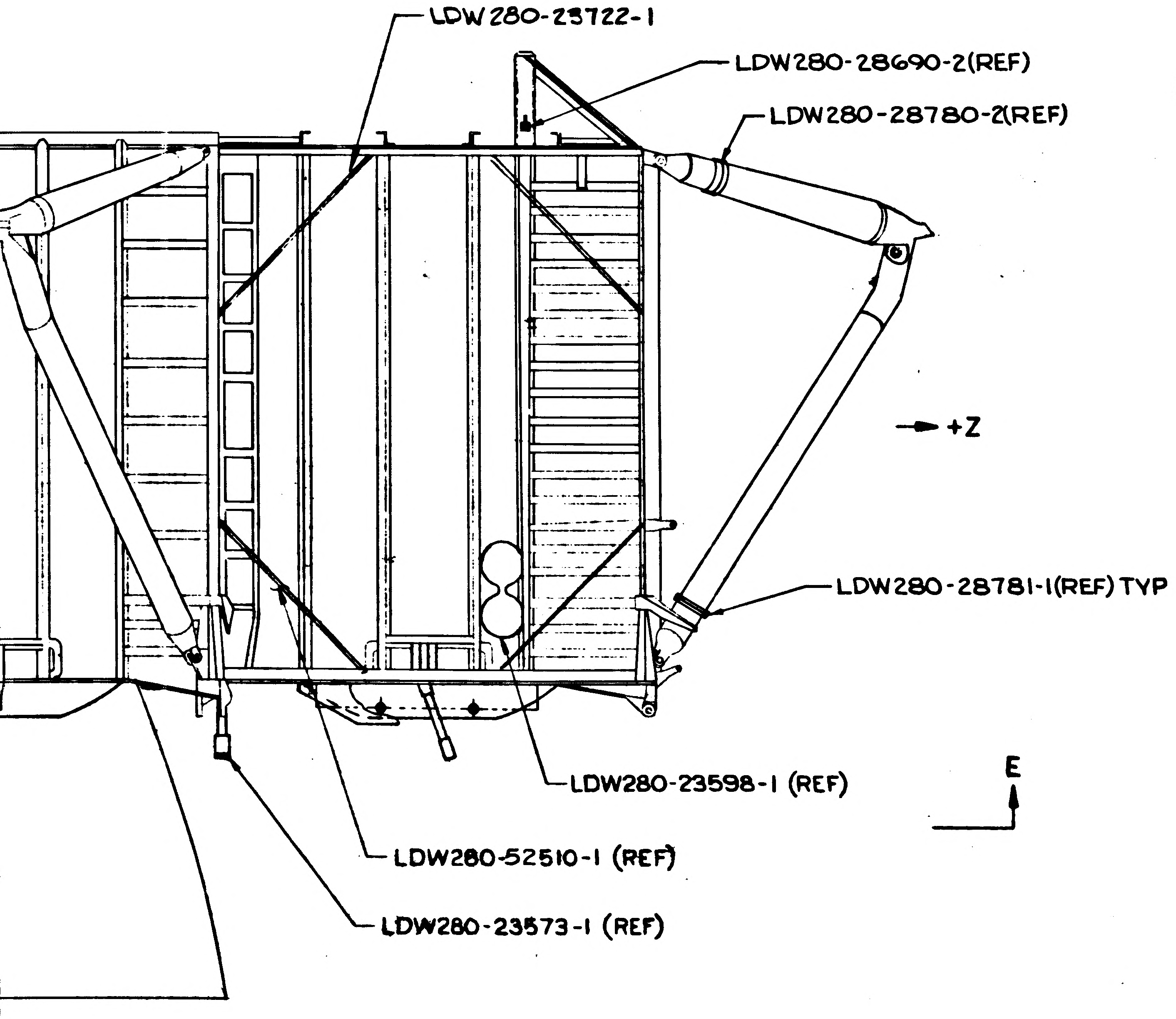
LDW280-23722-1
LDW280-28690-2(REF)
LDW280-28780-2(REF)
+Z
LDW280-28781-1(REF) TYP
LDW280-23598-1 (REF)
E
LDW280-52510-1 (REF)
LDW280-23573-1 (REF)

W C-C
BD - RH SIDE

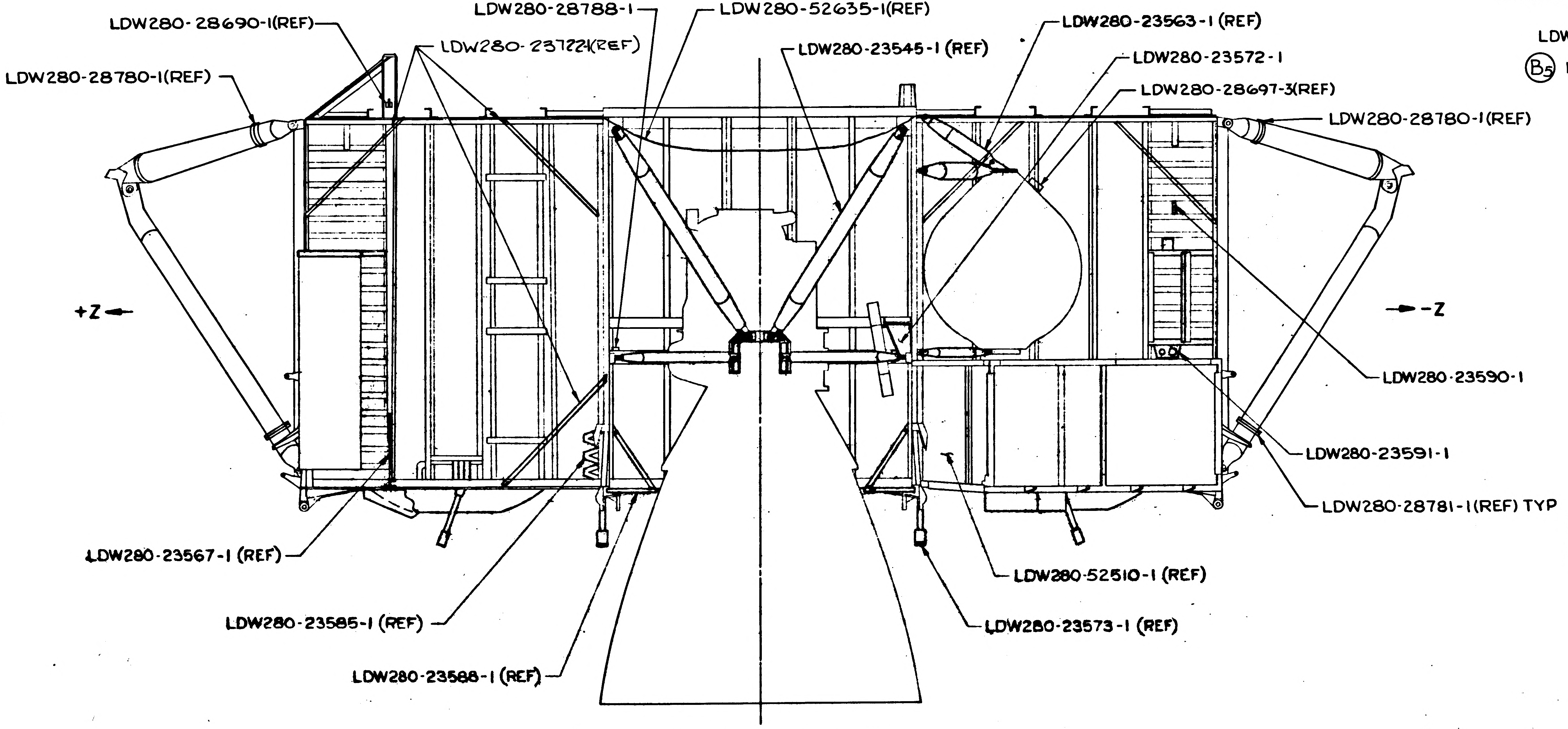
LDW280-28788-1
LDW280-52635-1(REF)
LDW280-28690-1(REF)
LDW280-23722(REF)
LDW280-23545-1 (REF)
LDW280-23563-1 (REF)
LDW280-23572-1
LDW280-28780-1(REF)
LDW280-28697-3(REF)
LDW280-28780-1(REF)
+Z
-Z
LDW280-23590-1
LDW280-23591-1
LDW280-28781-1(REF) TYP
LDW280-23567-1 (REF)
LDW280-52510-1 (REF)
LDW280-23585-1 (REF)
LDW280-23573-1 (REF)
LDW280-23588-1 (REF)

VIEW A-A (ROTATED 180°)
LOOKING INBD - LH SIDE

02/04
NAS 9-1100

0-52509 SH 3

LDW280-52509 SH 3

NOTES

1. NO TOOLING HOLES PERMITTE

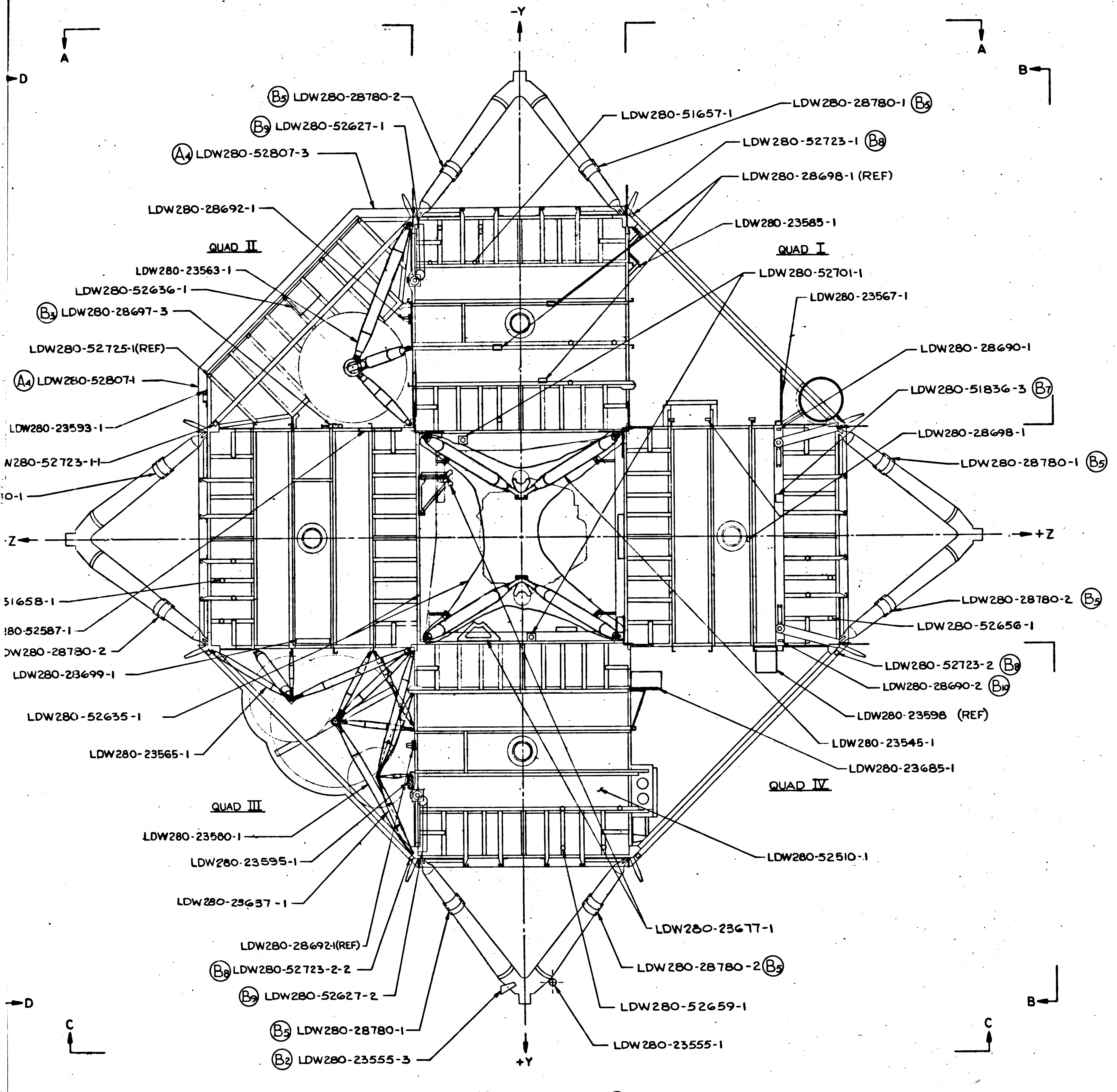
A
A
D
B
-Y
(B5) LDW280-28780-2
(B9) LDW280-52627-1
(A4) LDW280-52807-3
LDW280-28692-1
QUAD II
LDW280-23563-1
LDW280-52636-1
(B3) LDW280-28697-3
LDW280-52725-1(REF)
(A4) LDW280-52807-1
LDW280-23593-1
N280-52723-1-1
10-1
-Z
51658-1
280-52587-1
W280-28780-2
LDW280-23699-1
LDW280-52635-1
LDW280-23565-1
QUAD III
LDW280-23580-1
LDW280-23595-1
LDW280-23637-1
LDW280-28692-1(REF)
(B8) LDW280-52723-2-2
(B9) LDW280-52627-2
(B5) LDW280-28780-1
(B2) LDW280-23555-3
D
C
+Y
LDW280-51657-1
LDW280-28780-1 (B5)
LDW280-52723-1 (B8)
LDW280-28698-1 (REF)
LDW280-23585-1
QUAD I
LDW280-52701-1
LDW280-23567-1
LDW280-28690-1
LDW280-51836-3 (B7)
LDW280-28698-1
LDW280-28780-1 (B5)
+Z
LDW280-28780-2 (B5)
LDW280-52656-1
LDW280-52723-2 (B8)
LDW280-28690-2 (B10)
LDW280-23598 (REF)
LDW280-23545-1
LDW280-23685-1
QUAD IV
LDW280-52510-1
LDW280-23677-1
LDW280-28780-2 (B5)
LDW280-52659-1
LDW280-23555-1
B
C

LDW280-52509-1 (A1)
VIEW LOOKING DOWN

03/04 NAS 9-1100

LDW280-52509 SH 3

LDW280-52509 SH 3

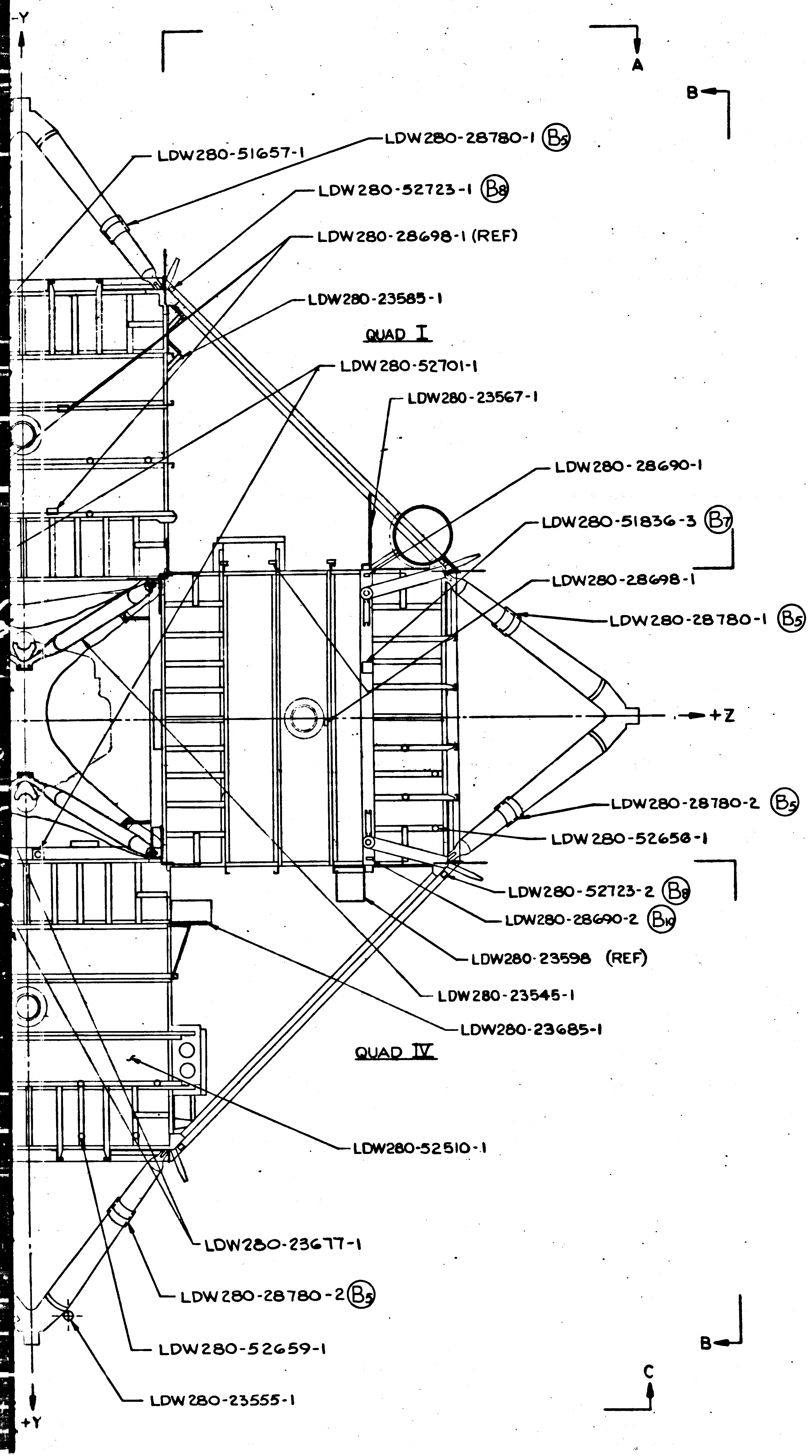
-Y
A
B
LDW280-51657-1
LDW280-28780-1 (B5)
LDW280-52723-1 (B8)
LDW280-28698-1 (REF)
LDW280-23585-1
QUAD I
LDW280-52701-1
LDW280-23567-1
LDW280-28690-1
LDW280-51836-3 (B7)
LDW280-28698-1
LDW280-28780-1 (B5)
+Z
LDW280-28780-2 (B5)
LDW280-52650-1
LDW280-52723-2 (B8)
LDW280-28690-2 (B10)
LDW280-23598 (REF)
LDW280-23545-1
LDW280-23685-1
QUAD IV
LDW280-52510-1
LDW280-23677-1
LDW280-28780-2 (B5)
LDW280-52659-1
LDW280-23555-1
B
C
+Y

0-52509-1 (A1)
OOKING DOWN

NOTES

1. NO TOOLING HOLES PERMITTED IN PARTS.

MANUFACTURING OPERATIONS UNLESS OTHERWISE SPECIFIED NOTES CHECKED √ APPLY TO THIS DWG.	
PART NUMBER AND ALL OTHER MARKINGS IN REGION MARKED ⊠ USE BOTH SIDES IF NECESSARY.	
FILLET AND INSIDE CORNER RADII TOLERANCES .016R TO .062R ± .010 .063R TO .250R ± .015 OVER .250R ± .030	
DEPTH SHOWN FOR TAPPED HOLES IS FULL THDS. 2-3 IMP THDS. BEYOND PERMISSIBLE.	
EXTERNAL THREAD LENGTH SHOWN INCLUDES 2 IMPERFECT THREADS MAX.	
DO NOT CADMIUM PLATE & PAINT HOLES OR SURFACES MARKED WITH DOUBLE ASTERISK.	
MISMATCH STEP OF ± .005 PERMISSIBLE DUE TO CHANGE OF CUTTERS AT INSIDE INTERSECTING SURFACES.	
DIAMETERS MARKED MUST BE CONCENTRIC WITHIN FULL INDICATOR READING	
HOLES MUST BE KEPT FREE OF CHROME PLATING SOLUTION.	
ALL DIMENSIONS SHOWN TO BE MET AFTER CADMIUM PLATING. THICKNESS OF PLATE .0003 MIN. TO .0005 MAX. MIN. THICKNESS TO BE .0002 ON THREADED AREAS. NO ALLOWANCE FOR PLATING IN HOLES	
125 SURFACE ROUGHNESS INCLUDING REAMED HOLES PER MIL-STD-10	
200 FOR ALL DRILLED HOLES	
REMOVE ALL BURRS. BREAK ALL EDGES .015-.031	
INSPECTION INFORMATION MINIMUM PERMISSIBLE AVERAGE EDGE DISTANCE MARKED IS	
SYMBOL f DENOTES SURFACE TO BE MACHINED	
UNLESS OTHERWISE SPECIFIED TOLERANCE ON FLANGES IS ± 1/32	
LENGTHS OF AN, NAS & MS AL ALY RIVETS SHORTER THAN 1 INCH ARE NOT SPECIFIED.	
TOLERANCE ON LOFTED DELINEATIONS IS	

DWG SIZE 34 X 142

PRINTING INFO ONLY
FULL SIZE SHEET AREA (36 X 144)= 36 SQ. FT.
1/2 SIZE SHEET AREA (1/4 OF FULL)= 9 SQ. FT.

PRINT TRIM LINE

LDW280-52509 B

LDW280-52509 B

04/04 NAS 9-1100

LDW280-52509 SH 3

GRUMMAN AIRCRAFT ENGRG CORP., BETHPAGE, L. I., NEW YORK

MODEL OR END ITEM	SIZE	CODE IDENT NO.		
L M	J	26512	LDW280-52509	B
	SCALE 1/10		SHEET 3.00	

THIS IS AN ORIGINAL DRAWING 4FR

H.G.

ENG 32.1 REV 3-65

GRUMMAN AIRCRAFT ENGINEERING CORP.
CODE IDENT NO. 26512
ENGINEERING ORDER

DWG. NO. LDW280-52509 | EO NO. B1
CONTROL INFO NO. LM-2-2853

IN FLD/DWG & B/M
FOR -1 INSTL
DELETE LDW280-28711-1 INSTL
ADD LDW280-28711-1-1 INSTL

DETAIL SPEC REQ		CL II ENGRG CHG		CL I ENGRG CHG		2

REASON FOR EO	DESCRIPTION OF EO	⑫ GAEC C EO RELEASE
ELIMINATE INTERFERENCE BETWEEN BRACKET & STRUCTURE	IN FLD/DWG & B/M FOR-1 INSTL LDW280-28711-1-1 WAS LDW280-28711-1	F.S.

MODEL	EFFECTIVITY			DRAWING CHANGE REQD		DISPOSITION OF PARTS		APPROVED BY								
	PROCURING ACTIVITY NO.	GAEC UNIT NO.	SUB CONTR UNIT NO.	✓		✓		DATE					caw 10-1-66	caw 10-1-66	10-3-66	10-1-66
LM		LM-2(32)		REVISE DWG	RECORD EO	REWORK	SCRAP	9/30/66	VDI	SUPPORT	RELIAB. GROUP	GROUP LEADER	STRESS GROUP	LIAISON ENGRG	PROJ ENGRG	~~GOVT~~

PRIORITY	DRAWING TITLE	DRAWING NO.	EO NO.
C	SUPPORTS INSTALLATION D/S ~ SUB-SYSTEMS COMPONENTS	LDW280-52509	B1

ISSUED BY LIAISON J. MALONEY X3604 SECTION V.D.I. GROUP NO. 335 PL 35

01

NAS 9-1100

ENG 32.1 REV 3-65

GRUMMAN AIRCRAFT ENGINEERING CORP.
CODE IDENT NO. 26512
ENGINEERING ORDER

DWG. NO.	LDW280-52509	EO NO.	B2
CONTROL INFO NO.	LDW280-A0581		

ON-1
ADD LDW280-23555-3 (1) BRACKET INSTL

3

DETAIL SPEC REQ	☐	CL II ENGRG CHG	☐	CL I ENGRG CHG	☐

REASON FOR EO	DESCRIPTION OF EO	GAEC EO RELEASE
ADDITIONAL REQUIREMENTS FOR LM SLA SUPT	ON-1 ADDED LDW280-23555-3	LE 10-3

MODEL	EFFECTIVITY: PROCURING ACTIVITY NO.	GAEC UNIT NO.	SUB CONTR UNIT NO.
LM		LM-2 (32)	

DRAWING CHANGE REQD: REVISE DWG	RECORD EO	DISPOSITION OF PARTS: REWORK	SCRAP
✓		✓	

APPROVED BY								
DATE	[illegible]	10-5			9/26		10-1-66	10/[illegible]/66
	V.D.I	~~SUPPORT~~ WT	RELIAB. GROUP	GROUP LEADER	STRESS GROUP	LIAISON ENGRG	PROJ ENGRG	~~GOVT~~

PRIORITY	DRAWING TITLE	DRAWING NO.	EO NO.
C	SPT INSTL D/S SUB/SYS COMPONENT	LDW280-52509	B2

ISSUED BY M. GREY / J. STRAKOSCH X1153 SECTION VEHICLE DESIGN GROUP NO. 28 PL 35

01

NAS 9-1100

H.G.
ENG 32.1 REV 3-65

GRUMMAN AIRCRAFT ENGINEERING CORP.
CODE IDENT NO. 26512
ENGINEERING ORDER

DWG. NO. LDW280-52509
EO NO. B3
CONTROL INFO NO. LM-2-2887

IN FLD/DWG & B/M
FOR -1 INSTL
DELETE LDW280-28697-1 INSTL & LDW280-23680-1 INSTL
ADD LDW280-28697-3 INSTL & LDW280-23680-3 INSTL

2

DETAIL SPEC REQ		CL II ENGRG CHG		CL I ENGRG CHG	

REASON FOR EO	DESCRIPTION OF EO	GAEC EO RELEASE
SUPPORT REVISED DUE TO ADDITIONAL TRANSDUCER	IN FLD & B/M FOR-1, LDW280-28697-3 WAS -1 & LDW280-23680-3 WAS -1	E 16

MODEL	EFFECTIVITY		
	PROCURING ACTIVITY NO.	GAEC UNIT NO.	SUB CONTR UNIT NO.
LM		LM-2(32)	

DRAWING CHANGE REQD		DISPOSITION OF PARTS		APPROVED BY	JAS				caw	caw	AMC	
✓		✓		DATE	10/19				10-13-66	10-15-66	10-17-66	10-15-66
REVISE DWG	RECORD EO	REWORK	SCRAP	10/12/66	VDI	SUPPORT	RELIAB. GROUP	GROUP LEADER	STRESS GROUP	LIAISON ENGRG	PROJ ENGRG	~~GOVT~~

PRIORITY	DRAWING TITLE	DRAWING NO.	EO NO.
C	SUPPORTS INSTALLATION D/S ~ SUB-SYSTEMS COMPONENTS	LDW280-52509	B3

ISSUED BY LIAISON J. MALONEY X3604 SECTION V.D.I. GROUP NO. 335 PL 35

01

NAS 9-1100

ENG 32.1 REV 3-65

GRUMMAN AIRCRAFT ENGINEERING CORP.
CODE IDENT NO. 26512
ENGINEERING ORDER

DWG. NO. LDW280-52509		EO NO. B4
CONTROL INFO NO. LDW280A-3400		

ON-1 IN F/D & IN B/M ADD LDW280-518361(1REQD)

2

DETAIL SPEC REQ		CL II ENGRG CHG		CL I ENGRG CHG	

REASON FOR EO	DESCRIPTION OF EO	GAEC EO RELEASE
TO INCORPORATE ADDITTIONAL PARTS	ON-1 ADDED LDW280-518361(1 REQD)	11/21

MODEL	EFFECTIVITY		
	PROCURING ACTIVITY NO.	GAEC UNIT NO.	SUB CONTR UNIT NO.
LM		LM-2(32)	

DRAWING CHANGE REQD		DISPOSITION OF PARTS	
✓		✓	
REVISE DWG	RECORD EO	REWORK	SCRAP

APPROVED BY							RMC	
DATE	11/15				11/18		11-19-66	11-21-66
5	VD1	SUPPORT	RELIAB. GROUP	GROUP LEADER	STRESS GROUP	LIAISON ENGRG	PROJ ENGRG	~~GOVT~~

PRIORITY	DRAWING TITLE	DRAWING NO.	EO NO.
C	SUPPORTS INSTALLATION DESCENT STAGE	LDW280-52509	B4

ISSUED BY W.MANOS X-1441 11/15/66 SECTION VEH. DES. INT GROUP NO. 335 PL 35

01 NAS 9-1100

ENG 32.1 REV 3-65

GRUMMAN AIRCRAFT ENGINEERING CORP.
CODE IDENT NO. 26512

ENGINEERING ORDER

*

DWG. NO. LDW280-52509	EO NO. B5
CONTROL INFO NO. LDW280A 3611	

IN F/D REVISE CALLOUTS OF LDW280-28780-1 AS SHOWN & ADD LDW 280-28780-2
IN B/M ADD LDW 280-28780-2 4 REQ'D & LDW280-28780-1 4 REQ'D WAS 1 REQ'D

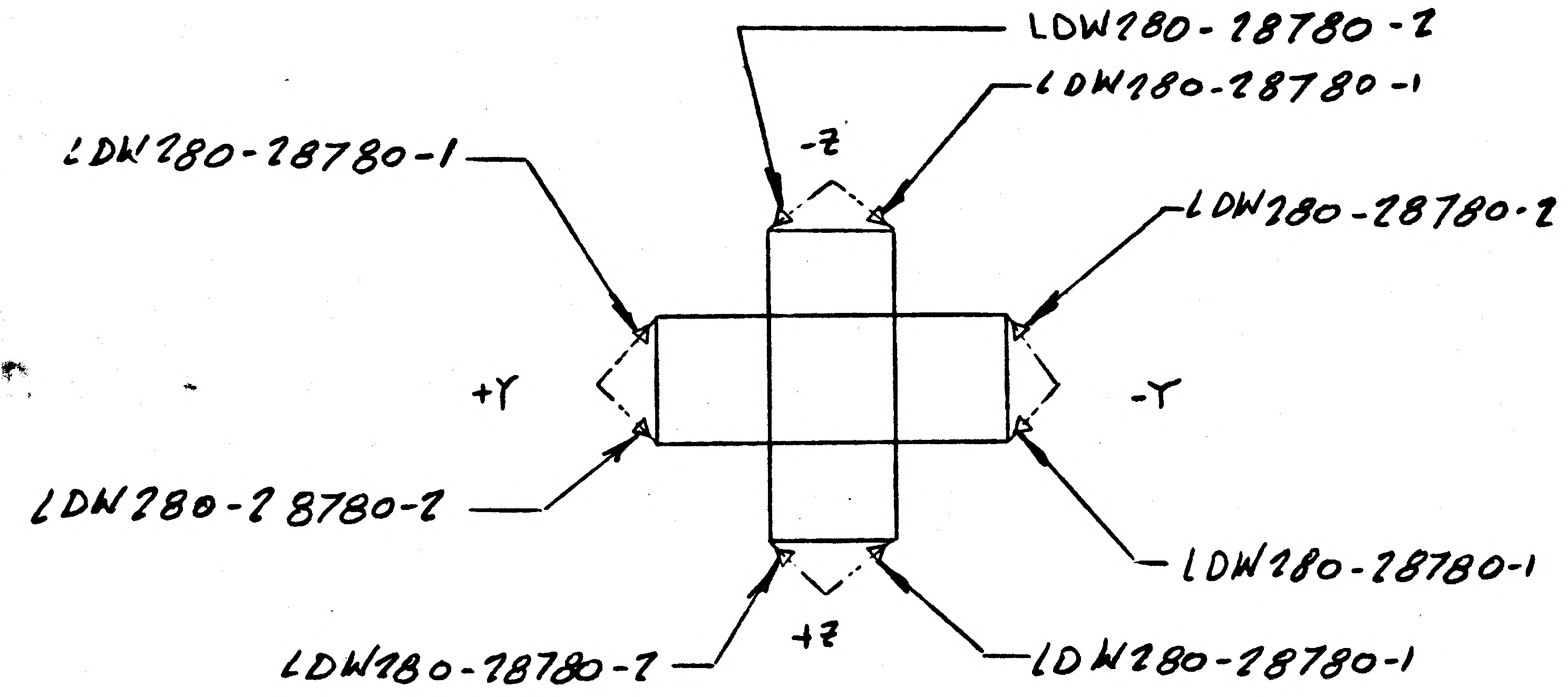

LDW280-28780-2
LDW280-28780-1
-Z
LDW280-28780-1
LDW280-28780-2
+Y
-Y
LDW280-28780-2
LDW280-28780-1
LDW280-28780-2
+Z
LDW280-28780-1

VIEW LOOKING DOWN

DETAIL SPEC REQ	☐	CL II ENGRG CHG	☐	CL I ENGRG CHG	☐	2

REASON FOR EO: TO PROVIDE PROPER VENTING (THERMO REQUIREMENT)

DESCRIPTION OF EO: FOR -1 ADDED LDW280-28780-2 (4 REQ'D) LDW280-28780-1 4 REQ'D WAS 1 REQ'D

Ⓕ GAEC EO RELEASE ✓
FR 12/1/6

MODEL	EFFECTIVITY: PROCURING ACTIVITY NO.	GAEC UNIT NO.	SUB CONTR UNIT NO.
LM		LM7(32)	

DRAWING CHANGE REQD		DISPOSITION OF PARTS	
✓		✓	
REVISE DWG	RECORD EO	REWORK	SCRAP

APPROVED BY		AB			NM			
DATE	12/2/66	12/2/66		12/2/66	12/2/66		12-2-66	12-3-66
5	VDI	~~SUPPORT~~ THERMO	RELIAB. GROUP	GROUP LEADER	STRESS GROUP	LIAISON ENGRG	PROJ ENGRG	~~GOVT~~

PRIORITY	DRAWING TITLE	DRAWING NO.	EO NO.
C	SUPT INST. D/S SUBSYSTEMS COMP.	LDW280-52509	B5

ISSUED BY P. WEISS C. TZ / J. STRAKOSCH X1153 SECTION VDI. GROUP NO. 335 PL 35

01 NAS 9-1100

ENG 32.1 REV 3-65

GRUMMAN AIRCRAFT ENGINEERING CORP.
CODE IDENT NO. 26512 *

ENGINEERING ORDER

~~DWG.~~ NO. LEO-280		EO NO. 413
CONTROL INFO NO. LM 5-11429		

REMOVE LDW280-28711-1 SUPPORT INSTL
FROM THE FOLLOWING DWGS:

VEH.	DWG NO	*	TITLE	CHG NO.	EFF
✓ LM -	LDW280-51509	-1	SUPT. INST - D/S SUB SYST. EQUIP	C7	LM-1
✓ LM -	LDW280-52509	-1	"	B6.	LM-2
LM -	LDW280-53509	-1	"	A9.	LM-3

RELEASED BY LIAISON

(REF) LDW280-28711- CONT NO. LM5-11430
(REF) LDW280-17919- LM 5-11931

DETAIL SPEC REQ	☐	CL II ENGRG CHG	☐	CL I ENGRG CHG	☐	(5)

REASON FOR EO	DESCRIPTION OF EO	GAEC EO RELEASE
SUPT INSTL OF FIRE IN THE HOLE IS REDESIGNED	ON INSTL NO * REMOVED LDW280-28711-1	LE

MODEL	EFFECTIVITY: PROCURING ACTIVITY NO.	GAEC UNIT NO.	SUB CONTR UNIT NO.
LM		NOTED	

DRAWING CHANGE REQD: REVISE DWG	RECORD EO	DISPOSITION OF PARTS: REWORK	SCRAP
✓		✓	

		SUPPORT	RELIAB. GROUP	GROUP LEADER	STRESS GROUP	LIAISON ENGRG	PROJ ENGRG	
APPROVED BY	WT				JAB			
DATE	12/15/66				12/5/66	12/15	2-15-67	2/1/66
5	VDI							

PRIORITY	DRAWING TITLE	DRAWING NO.	EO NO.
C	NOTED	LEO-280	413

ISSUED BY RAGAS X6454 SECTION VDI GROUP NO. 335 PL 5

01 NAS 9-1100

A.G
ENG 32.1 REV 3-65

GRUMMAN AIRCRAFT ENGINEERING CORP.
CODE IDENT NO. 26512

ENGINEERING ORDER

DWG. NO. LDW280-52509 | EO NO. B7
CONTROL INFO NO. LM-2-3147

THIS E.O. CANCELS E.O. B4 ~

ON-1 IN B/M & F/D ~

ADD LDW280-51836-3 (1 REQ'D)

2

DETAIL SPEC REQ		CL II ENGRG CHG	
CL I ENGRG CHG			

REASON FOR EO: WRONG PART CALLOUT ON E.O. B4

DESCRIPTION OF EO: THIS E.O. CANCELS E.O. B4 ON-1 IN B/M & F/D: ADDED LDW280-51836-3 (1)

GAEC EO RELEASE: C — K — 02025

MODEL	EFFECTIVITY: PROCURING ACTIVITY NO.	GAEC UNIT NO.	SUB CONTR UNIT NO.
LM		LM-2 (32)	

DRAWING CHANGE REQD: REVISE DWG ✓ · RECORD EO

DISPOSITION OF PARTS: REWORK ✓ · SCRAP

APPROVED BY					MA	Ctf	RWC	
DATE	1/5				12/21/66	12/21/66	12/27	12/27/66
—/—	VDI	SUPPORT	RELIAB. GROUP	GROUP LEADER	STRESS GROUP	LIAISON ENGRG	PROJ ENGRG	~~GOVT~~

PRIORITY	DRAWING TITLE	DRAWING NO.	EO NO.
C	SUPPORT INSTALLATION DESCENT STAGE	LDW280-52509	B7

ISSUED BY LIAISON / E.NEFF X3604 12-21-66 SECTION V.D.I. GROUP NO. 335 PL 35

01 NAS 9-1100

4.G.
ENG 32.1 REV 3-65

GRUMMAN AIRCRAFT ENGINEERING CORP.
CODE IDENT NO. 26512
ENGINEERING ORDER

DWG. NO. LDW280-52509	EO NO. B9
CONTROL INFO NO. LM-2-3158	

FOR -1 INSTL
IN FLD/DWG & B/M, DELETE LDW280-28711-1-1
LDW280-28723-1 SHOULD BE LDW280-52723-1, -1-1, -2 & -2-2
LDW280-23631-1 SHOULD BE LDW280-23631-3

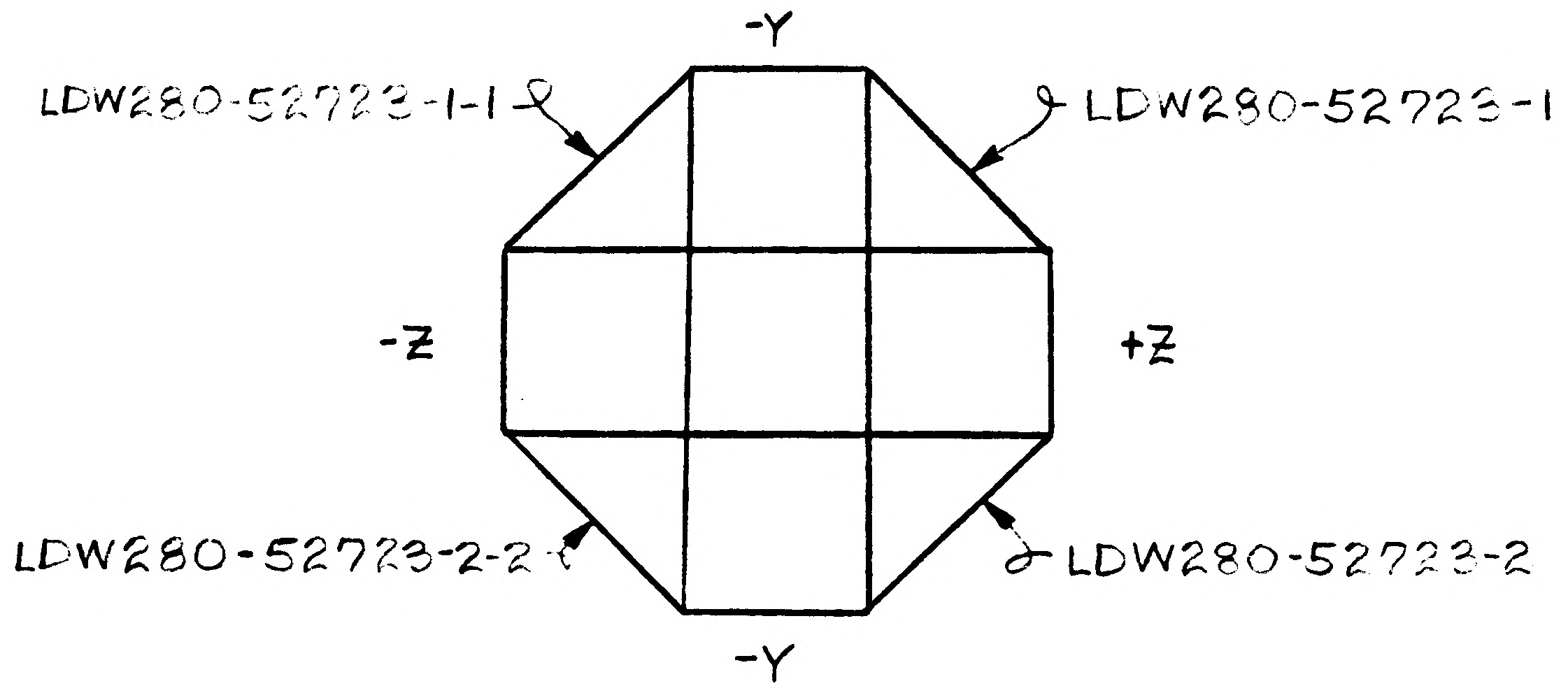

2

DETAIL SPEC REQ		CL II ENGRG CHG		CL I ENGRG CHG	

REASON FOR EO: INCORRECT PART CALLOUT

DESCRIPTION OF EO: FOR -1, IN FLD & B/M, DELETED LDW280-28711-1-1 & LDW280-28723-1. ADDED LDW280-52723-1, -1-1, -2 & -2-2. LDW280-23631-3 WAS -1.

GAEC EO RELEASE: C 16 02035

MODEL	EFFECTIVITY: PROCURING ACTIVITY NO.	GAEC UNIT NO.	SUB CONTR UNIT NO.
LM		LM-2(32)	

DRAWING CHANGE REQD: REVISE DWG	RECORD EO	DISPOSITION OF PARTS: REWORK	SCRAP
✓		✓	

APPROVED BY							RMC	
DATE	1/25				12/30/66	12/30/66	1-4-67	12/
-1-	VDI	SUPPORT	RELIAB. GROUP	GROUP LEADER	STRESS GROUP	LIAISON ENGRG	PROJ ENGRG	GOVT

PRIORITY	DRAWING TITLE	DRAWING NO.	EO NO.
C	SUPPORT INSTL ~ DESCENT STAGE SUB-SYSTEMS COMPONENTS	LDW280-52509	B9

ISSUED BY J. MALONEY 12/28/66 X3604 SECTION V.D.I. GROUP NO. 335 PL 35

01

NAS 9-1100

ENG 32.1 REV 3-65

GRUMMAN AIRCRAFT ENGINEERING CORP.
CODE IDENT NO. 26512
ENGINEERING ORDER

DWG. NO.	LDW280-52509	EO NO.	B9
CONTROL INFO NO.	LDW280A-4709		

ADD LDW280-52627-1 &-2 (1EA REQD/MOD) TO -1 INSTL

DETAIL SPEC REQ	☐	CL II ENGRG CHG	☐	CL I ENGRG CHG	☐

REASON FOR EO	DESCRIPTION OF EO	GAEC EO RELEASE
ADDITIONAL METEOROID PROTECTION REQD AT AFT INTERSTAGE	ADDED LDW280-52627-1 &-2 (1EA REQD/MOD) TO-1 INSTL	FR 1/13/67

MODEL	EFFECTIVITY PROCURING ACTIVITY NO.	EFFECTIVITY GAEC UNIT NO.	EFFECTIVITY SUB CONTR UNIT NO.
LM		LM-2(32)	

DRAWING CHANGE REQD REVISE DWG	DRAWING CHANGE REQD RECORD EO	DISPOSITION OF PARTS
✓		NOT REQD

APPROVED BY	JHS				WJM				
DATE	1/11/67				1/11/67			1/12/67	1-17-67
5	VDI	SUPPORT	RELIAB. GROUP	GROUP LEADER	STRESS GROUP	LIAISON ENGRG		PROJ ENGRG	GOVT

PRIORITY	DRAWING TITLE	DRAWING NO.	EO NO.
C	SUPPORT INSTL D/S SUB SYSTEM COMPONENTS	LDW280-52509	B9

ISSUED BY V.A. CHRISTINA / J. STRAKOSCH SECTION VDI x1153 GROUP NO. 335 PL 35

01

NAS 9-1100

ENG 32.1 REV 3-65 B

GRUMMAN AIRCRAFT ENGINEERING CORP.
CODE IDENT NO. 26512
ENGINEERING ORDER *

DWG. NO.	LDW280-52509	EO NO.	C1
CONTROL INFO NO.	LDW280A 5964		

IN F/D & B/M FOR -1
LDW280-23555-1 & -3 IS REPLACED BY LDW280-51555-1

DETAIL SPEC REQ	☐	CL II ENGRG CHG	☐	CL I ENGRG CHG	✓	LCD 19-1220	5

REASON FOR EO	DESCRIPTION OF EO	GAEC EO RELEASE
REDESIGN OF LM/SLA UMBILICAL CONN SUPPORT & ANTENNA SWITCH LCR19-1220	IN F/D & B/M FOR -1 LDW280-51555-1 WAS LDW280-23555-1 & -3	Ⓡ C JS 3-28-7

MODEL	EFFECTIVITY		
	PROCURING ACTIVITY NO.	GAEC UNIT NO.	SUB CONTR UNIT NO.
LM		LM-2(32)	

DRAWING CHANGE REQD		DISPOSITION OF PARTS	
✓		✓	
REVISE DWG	RECORD EO	REWORK	SCRAP

APPROVED BY								
DATE	3/23/67			3/16/67	3/23/67		3/27/67	3/28/67
5	VDI	SUPPORT	RELIAB. GROUP	GROUP LEADER	STRESS GROUP	LIAISON ENGRG	PROJ ENGRG	

PRIORITY	DRAWING TITLE	DRAWING NO.	EO NO.
C	SUPPORTS INSTL D/S - SUB SYSTEMS COMPONENTS	LDW280-52509	C1

ISSUED BY G. BARNES/J. STRAROSCH X1153 SECTION VDI GROUP NO. 335 PL 25

C

ENG 32.1 REV 3-65

GRUMMAN AIRCRAFT ENGINEERING CORP.
CODE IDENT NO. 26512

ENGINEERING ORDER

DWG. NO. LDW280-52509
EO NO. C2
CONTROL INFO NO. LDW280A 6797

FOR-1
IN FLD/DWG & B/M

DELETE: LDW280-28781-1
LDW280-51658-1
LDW280-52635-1

ADD: LDW280-28790-3
LDW280-52658-1
LDW280-52789-1
LDW280-52791-1
LDW280-52795-1
LDW280-53794-1
} 1EA. REQ'D/ASS'Y

DETAIL SPEC REQ ☐ CL II ENGRG CHG ✓ CL I ENGRG CHG ☐

2

REASON FOR EO: TO ADD INSTL'S TO DWG. UPDATE DWG

DESCRIPTION OF EO: IN FLD & B/M FOR-1 REMOVED: LDW280-28781-1, LDW280-51658-1 & LDW280-52635-1 ADDED: LDW280-28790-3, LDW280-52658-1, LDW280-52789-1, LDW280-52791-1, LDW280-52795-1, & LDW280-53794-1

Ⓡ GAEC EO RELEASE: C JK 5/20/67

MODEL	PROCURING ACTIVITY NO.	GAEC UNIT NO.	SUB CONTR UNIT NO.
LM		LM-2(32)	

DRAWING CHANGE REQD: REVISE DWG ✓ RECORD EO
DISPOSITION OF PARTS: NOT REQ

APPROVED BY									
DATE	5/9/67			5/9/67	5/9/67		5/16/67	5/19/67
6	VDI	SUPPORT	RELIAB. GROUP	GROUP LEADER	STRESS GROUP	LIAISON ENGRG	PROJ ENGRG		

PRIORITY: C
DRAWING TITLE: SUPPORTS INSTL - DESCENT STAGE SUB SYSTEMS COMPONENTS
DRAWING NO.: LDW280-52509
EO NO.: C2

ISSUED BY G. BECKER / J. STRAKOSCH X1153 SECTION VEH DES INT. GROUP NO. 335 PL 25

01 NAS 9-1100

B

ENG 32.1 REV 3-65

GRUMMAN AIRCRAFT ENGINEERING CORP.
CODE IDENT NO. 26512
ENGINEERING ORDER

DWG. NO. LDW280-52509
EO NO. C3
CONTROL INFO NO. LDW280B0146

TO-1

1. IN FIELD OF DWG. (ZONE 11B) AND PARTS LIST, ADD LDW 280-23573-7 CHOCK INSTAL. WAS -1 CHOCK INSTL.

DETAIL SPEC REQ		CL II ENGRG CHG		CL I ENGRG CHG	✓ LCD 2223 CCA 745

(5)

REASON FOR EO: LANDING GEAR REMOVAL ON LM-2

DESCRIPTION OF EO: TO-1 ADDED LDW 280-23573-7 CHOCK INSTL. REMOVED LDW280-23573-1 INSTL.

GAEC EO RELEASE: JK 11/16/67

MODEL	EFFECTIVITY: PROCURING ACTIVITY NO.	GAEC UNIT NO.	SUB CONTR UNIT NO.
LM 12-15-67		LM-2 (32)	

DRAWING CHANGE REQD: REVISE DWG	RECORD EO	DISPOSITION OF PARTS: REWORK	SCRAP
✓		✓	

APPROVED BY								
DATE	11/10/67			11-10-67	11/13/67		11/14/67	11-15-67
P	VD1	SUPPORT	RELIAB. GROUP	GROUP LEADER	STRESS GROUP	LIAISON ENGRG	PROJ ENGRG	~~GOVT~~

PRIORITY: C

DRAWING TITLE: SUPPORTS INSTALLATION DESCENT STAGE SUB SYSTEMS COMPONENTS

DRAWING NO. LDW 280-52509

EO NO. C3

ISSUED BY E.V.R. CASE x1153 SECTION VD1 GROUP NO. 335 PL 25

01

NAS 9-1100

B

ENG 32.1 REV 3-65

GRUMMAN AIRCRAFT ENGINEERING CORP.
CODE IDENT NO. 26512
ENGINEERING ORDER

DWG. NO. LDW280-52509
EO NO. C4
CONTROL INFO NO. LDW280B 0430

ON-1 INSTL
LDW280-51555-5 REPLACES LDW280-51555-1

DETAIL SPEC REQ	☐	CL II ENGRG CHG	☐	CL I ENGRG CHG	✓	LCD 2319

REASON FOR EO: DETAIL PART DIM. CHANGE

DESCRIPTION OF EO: ON-1 LDW280-51555-5 REPLACED LDW280-51555-1

GAEC EO RELEASE: 11/18/67

MODEL	EFFECTIVITY PROCURING ACTIVITY NO.	GAEC UNIT NO.	SUB CONTR UNIT NO.
LM		LM-2(32)	

DRAWING CHANGE REQD: REVISE DWG	RECORD EO	DISPOSITION OF PARTS: REWORK	SCRAP
✓		✓	

	B	VD1	SUPPORT	RELIAB. GROUP	GROUP LEADER	STRESS GROUP	LIAISON ENGRG	PROJ ENGRG	GOVT
APPROVED BY									
DATE		11/16/67			11-16-67	11/17/67		11/16/67	11-18-67

PRIORITY	DRAWING TITLE	DRAWING NO.	EO NO.
C	SUPPORTS INSTL, DESCENT STAGE SUB-SYSTEMS COMPONENTS	LDW280-52509	C4

Don Ragas
ISSUED BY J. ANDERSEN / P. THORJSEN SECTION VD1 GROUP NO. 335 PL 25

01

NAS 9-1100

0

ENG 32.1 REV 3-65

GRUMMAN AIRCRAFT ENGINEERING CORP.

CODE IDENT NO. 26512

ENGINEERING ORDER

DWG. NO LDW280 52509

EO NO. C5

CONTROL INFO NO. LDW280B1638

ON-1 LDW280-23580-11 REPLACES LDW280-23580-3

DETAIL SPEC REQ		CL II ENGRG CHG		CL I ENGRG CHG	✓	LCD 2459	PKG #6 (5)

REASON FOR EO: TO ELIMINATE CRACKING OF SWAGED TUBES

DESCRIPTION OF EO: ON-1 LDW280-23580-11 REPLACES LDW280-23580-3

GAEC EO RELEASE: JK 2/1/68

MODEL	PROCURING ACTIVITY NO.	GAEC UNIT NO.	SUB CONTR UNIT NO.
LM		LM-2 (32)	

DRAWING CHANGE REQD: REVISE DWG ✓ RECORD EO

DISPOSITION OF PARTS: REWORK ✓ SCRAP

APPROVED BY								
DATE	1/30/68			1-29-68	1/30/68		1/30/68	1-31-68
P	VDI	SUPPORT	RELIAB. GROUP	GROUP LEADER	STRESS GROUP	LIAISON ENGRG	PROJ ENGRG	~~GOVT~~

PRIORITY: C

DRAWING TITLE: SUPPORT INSTL D/S SUBSYSTEM COMPONENT

DRAWING NO. LDW280-52509

EO NO. C5

1-30-68

ISSUED BY R CLARK/P THORJUSEN X1153 X9505 SECTION VDI GROUP NO. 280 PL 25

01

NAS 9-1100

ENG 32.1 REV 3-65

GRUMMAN AIRCRAFT ENGINEERING CORP.
CODE IDENT NO. 26512
ENGINEERING ORDER

DWG NO. LDW280-52509
EO NO. C6
CONTROL INFO NO. LDW280B6375

IN F/D & B/M ON-1 INSTL: ADD LDW280-23677-1-1 REPLACING LDW280-23677-1.

LFM

DETAIL SPEC REQ		CL II ENGRG CHG		CL I ENGRG CHG	✓	LCD3608 PKG#1, PG#2 (5)

REASON FOR EO	DESCRIPTION OF EO	GAEC EO RELEASE
REDESIGNED MOUNTING PROVISIONS FOR DESCENT STAGE ΔP ACCUMULATOR	IN F/D & B/M ON-1 INSTL: ADDED LDW280-23677-1-1 REPLACING LDW280-23677-1.	✓ 11/29/68

MODEL	EFFECTIVITY	GAEC UNIT NO.	SUB CONTR UNIT NO.
	EI [redacted]		
LM	LFM 301	LM-2(32)	

DRAWING CHANGE REQD		DISPOSITION OF PARTS										
✓		✓		DATE	11/25/68			11/25/68	11/26/68		11/25/68	11-29-68
REVISE DWG	RECORD EO	REWORK	SCRAP	APPROVED BY	VDI	SUPPORT	RELIAB. GROUP	GROUP LEADER	STRESS GROUP	LIAISON ENGR.	PROJ ENGRG	CONT

PRIORITY	DRAWING TITLE	DRAWING NO.	EO NO.
C	SUPPORTS INSTL ~ D/S SUB-SYSTEMS COMPONENTS	LDW280-52509	C6

C.D.R. 11/25/68
ISSUED BY J.J. ROGERS/P. THORJUSEN X87222 SECTION VEH DES INT GROUP NO. 335 PL 25

01
NAS 9-1100

LDW280-52510 A

LM	LDW280-52509	LM-2 (32)	1
MODEL OR END ITEM	NEXT ASSY	MODULE OR SER NO.	REQD PER MODULE OR END ITEM
PART NO. LDW280-52510-1		GAEC SCH NO. 51-1	

2

SH REV STATUS: FOR DESCRIPTION OF REV SEE SUBQ SH										
SHEET	1.00	1.10		2.00	2.01	3.00				
REV	A	A		A	A	A				
SHEET										
REV										
SHEET										
REV										

LAST SECT LTR USED	F	GRUMMAN REL INFO A			
LAST DASH NO. USED	-1	PRIM NO.	LE(001)		
		207	MD-14	A-1-16-7	

UNLESS OTHERWISE SPECIFIED DIMENSIONS ARE IN INCHES.
TOLERANCE UNLESS SPECIFIED
FRACTIONS - DECIMALS – ANGLES
± 1/16 ±.020 ± 1/2°
ORIG DWG AUTH
DETAIL SPEC REQUIREMENT
CLASS II ENGRG CHANGE
CLASS I ENGRG CHANGE

CONTRACT NO. NAS9-1100
LINE ITEM # 1
DOCUMENTATION TYPE II

DRAWN BY	L.DIXON 1/4/67		
LAYOUT BY	WEISSLITZ		
CHECKED BY	1-5-67		
GR LEADER			
VEH DES INT	1/11/67		
STRUCTURES	1/11/67	PROJ ENGR	1/13/67
STRUCTURES	1/1?	REL GROUP	1/14/67
WEIGHTS			

GRUMMAN AIRCRAFT ENGRG CORP
BETHPAGE, L. I., NEW YORK

STRUCTURAL ASSEMBLY
DESCENT STAGE

SIZE B
CODE IDENT NO. 26512
LDW280-52510 A
SCALE NONE
SHEET 1.00 OF 5

ENG 77.1 12-65

01

NAS 9-1100

REVISIONS FOR CONTINUATION OF REVISIONS SEE SHEET ______

CHANGE LTR	ITEM NO.	SHEET NO.	ZONE	GRUMMAN INFO ONLY	DET SPEC	CLASS I	CLASS II	ENGRG ORDER	DESCRIPTION	EFFECTIVITY	DISPOSITION OF EXISTING PARTS REWORK	DISPOSITION OF EXISTING PARTS SCRAP	CHANGED BY AND DATE	ENGRG APPD	APPD
A	1							EOA1	EOA1 INITIAL DWG. RELEASE, PARTS MADE PER EO	LM-2 & -3	NOT	REQD	L. DIXON 1-4-67	1/13/67	1/19/67
	2	1.00, 1.10 2.00 & 3.00	3A 8C 9B					EOA2	IN FLD & B/M, LDW280-52531-1 WAS LDW280-23531, LDW280-52524-1 WAS LDW280-23524-1, LDW280-52520-1 WAS LDW280-23520-1	LM-2	✓				
	3	1.00 & 1.10						EOA3	IN MOD BLK FOR-1 REMOVED LM-3(33) EFF	LM-3		✓			
	4	1.00, 1.10, 3.00	5B					LE0280-250	IN FLD, ADDED NOTE 2, ADDED DIM. 6 1/2 ± 1/4 & 5 1/2 ± 1/4 TRUE	LM-2	✓				
	5	1.00, 1.10 2.01 & 3.00	2B 4A					EOA5	FOR-1 ASSY, IN FLD OF DWG & B/M, REPLACED LDW280-23549-2 WITH LDW280-23549-5, REPLACED LDW280-23549-4 WITH LDW280-23549-7	LM-2	✓				
	6	1.10 & 3.00						LE0280-402	REF LE0280-250, REVISED NOTE 2 WAS "PAINT AREAS INDICATED PER LDW280-17869	LM-2	NOT	REQD			
	7								REF EOA2 EFF SHOULD INCLUDE LM-3 (33)	NOT REQD	NOT	REQD			
	8		5B						REF LEO 280-250, ADDED DETAIL-F D.F. GB				ll		
	9		6B 6C						IN FLD & B/M, LDW280-52525-1 WAS LDW280-23525-1 & LDW280-52526-1 WAS LDW280-23526-1.	LM-2	✓				

CHG APPROVED LTR	~~GROUP LDR~~	VEH DES INT	STRUCTURES	STRUCTURES	WEIGHTS
A		1/11/67	1/11/67		

GRUMMAN AIRCRAFT ENGRG CORP., BETHPAGE, L. I., NEW YORK

SIZE	CODE IDENT NO.		
B	26512	LDW280-52510	A
SCALE NONE			SHEET 1.10

ENG 77.16 3-66

01

NAS 9-1100

QTY PER ASSEMBLY -1	PART NO.	I&T	CODE IDENT	NOMENCLATURE OR DESCRIPTION	MATERIAL	GOVT SPEC	COML SPEC	STOCK SIZE	PROCESS SYM	FINISH NO.	ZONE
1	LDW280-23547-3	E		STRUT INSTL	SEE DWG						11A
2	LDW280-23547-1			STRUT INSTL							11B
1	LDW280-23540-1			BEAM ASSY							2B
1	LDW280-23539-1			PANEL INSTL							6B
1	LDW280-23538-1										4C
1	LDW280-52537-1										6B
1	LDW280-23536-1										10B
1	LDW280-23535-1										3B
1	LDW280-23534-1										8B
1	LDW280-23533-1										10C
1	LDW280-23532-1										3A
1	LDW280-52531-1										8C
1	LDW280-23530-1										6C
1	LDW280-23529-1										4C
1	LDW280-52528-1			PANEL ASSY							7C
1	LDW280-23527-1			BULKHEAD INSTL							9C
1	LDW280-52526-1										6C
1	LDW280-52525-1										6B
1	LDW280-52524-1			BULKHEAD INSTL							9B
1	LDW280-23523-1			DECK INSTL							4B
1	LDW280-23522-1										2B
1	LDW280-23521-1										3C
1	LDW280-52520-1			DECK INSTL	SEE DWG						3A
	LDW280-52510-1	E		STRUCTURAL ASSY					NONE	SEE NOTE 2	3A

SYM OR NO.	PROCESS SYM OR FINISH NO.	GRUMMAN SPEC OR MILITARY SPEC	SYM OR NO.	PROCESS SYM OR FINISH NO.	GRUMMAN SPEC OR MILITARY SPEC	SYM OR NO.	PROCESS SYM OR FINISH NO.	GRUMMAN SPEC OR MILITARY SPEC

I & T: IDENTIFICATION AND TRACEABILITY IN ACCORDANCE WITH NONE

GRUMMAN AIRCRAFT ENGRG CORP., BETHPAGE, L. I., NEW YORK

SIZE	CODE IDENT NO.		
B	26512	LDW280-52510	A

SCALE NONE SHEET 2.00

ENG 77.2 5-64

01

NAS 9-1100

QTY PER ASSEMBLY -1	PART NO.	I&T	CODE IDENT	NOMENCLATURE OR DESCRIPTION	MATERIAL	GOVT SPEC	COML SPEC	STOCK SIZE	PROCESS SYM	FINISH NO.	ZONE
1	LDW280M17401-1	E		CAP STRIP	SEE DWG						11B
1	LDW280M17400-1			CAP STRIP							3C
1	LDW280-23569-1			SUPPORT INSTL							12A
1	LDW280-23551-1			BEAM INSTL							4B
1	LDW280-23550-1			BEAM INSTL							4A
1	LDW280-23549-7			STRUT INSTL							4A
1	-3										4B
1	-5										2B
1	LDW280-23549-1	E		STRUT INSTL	SEE DWG						3C

SYM OR NO.	PROCESS SYM OR FINISH NO.	GRUMMAN SPEC OR MILITARY SPEC	SYM OR NO.	PROCESS SYM OR FINISH NO.	GRUMMAN SPEC OR MILITARY SPEC	SYM OR NO.	PROCESS SYM OR FINISH NO.	GRUMMAN SPEC OR MILITARY SPEC

I & T: IDENTIFICATION AND TRACEABILITY IN ACCORDANCE WITH NONE

GRUMMAN AIRCRAFT ENGRG CORP., BETHPAGE, L. I., NEW YORK

SIZE	CODE IDENT NO.		
B	26512	LDW280-52510	A
SCALE NONE		SHEET 2.01	

ENG 77.2 5-64

01

NAS 9-1100

LDW280-52510 SH 3 00

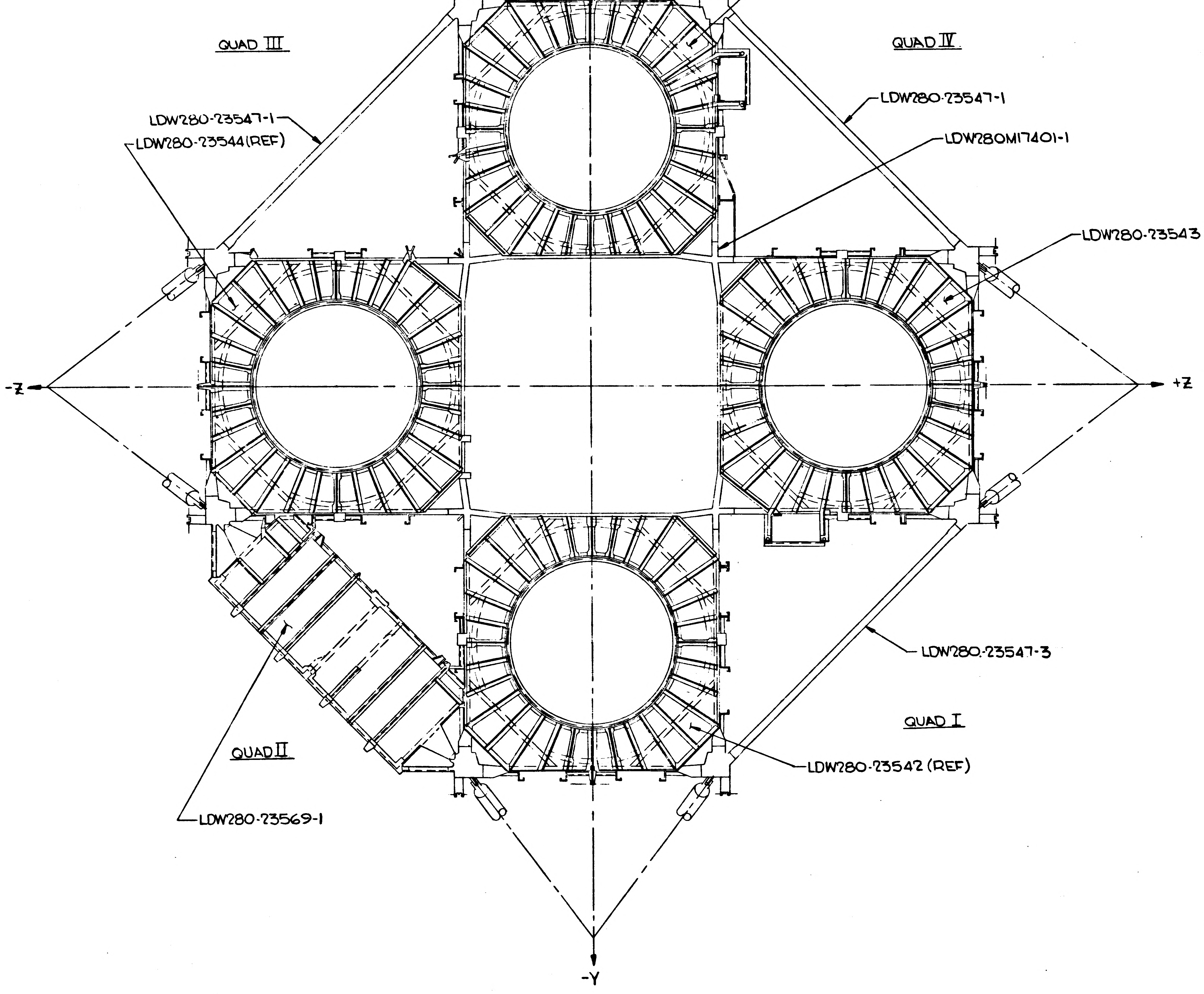

+Y
-Y
+Z
-Z
QUAD III
QUAD IV
QUAD II
QUAD I
LDW280-23541(REF)
LDW280-23547-1
LDW280-23544(REF)
LDW280-23547-1
LDW280M17401-1
LDW280-23543(REF)
LDW280-23547-3
LDW280-23542 (REF)
LDW280-23569-1

VIEW E-E
LOOKING UP

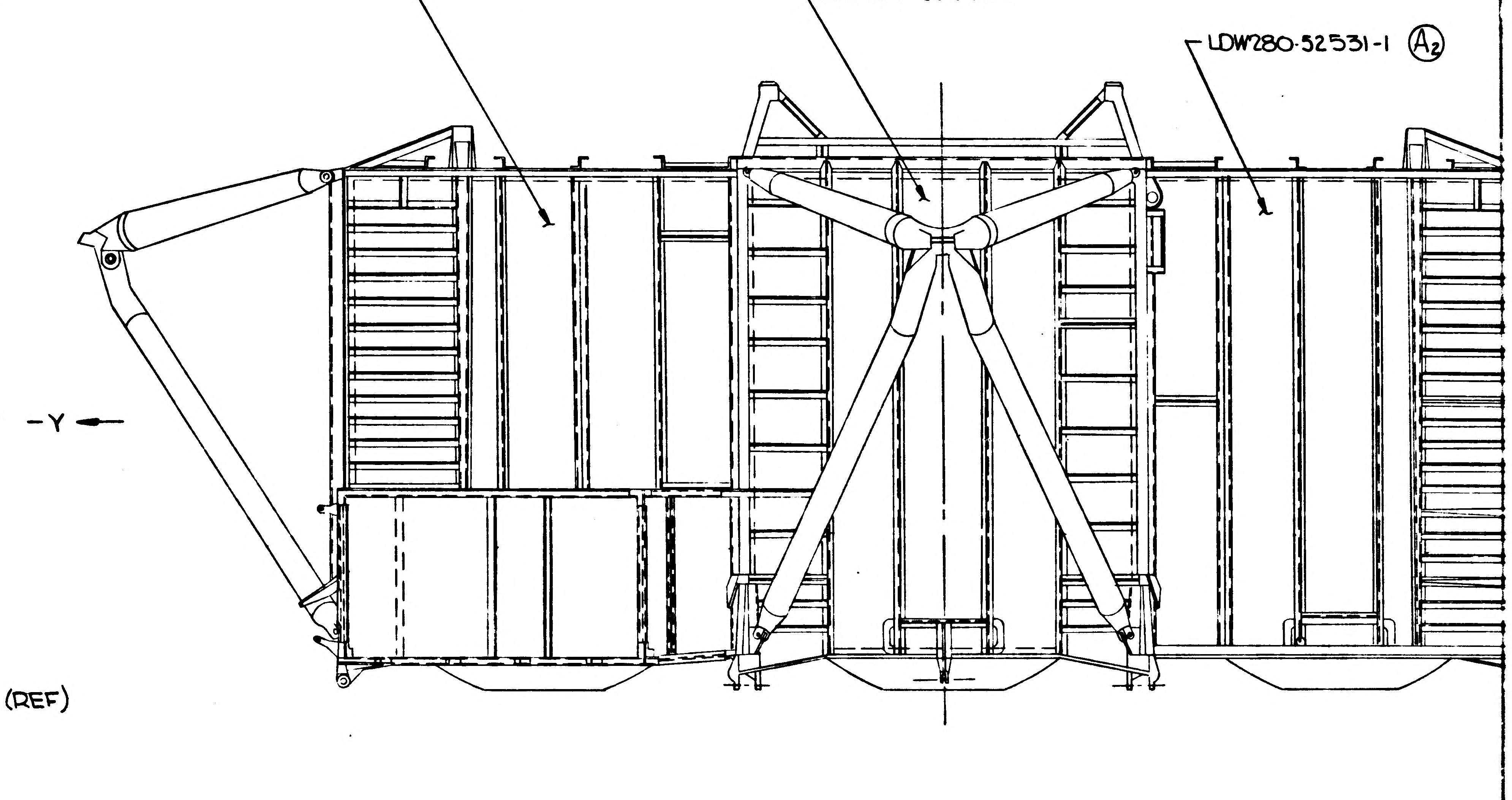

LDW280-23533-1
LDW280-23527-1
LDW280-52531-1 (A2)
-Y

VIEW D-D
(ROTATED 90° CCW)
LOOKING FWD

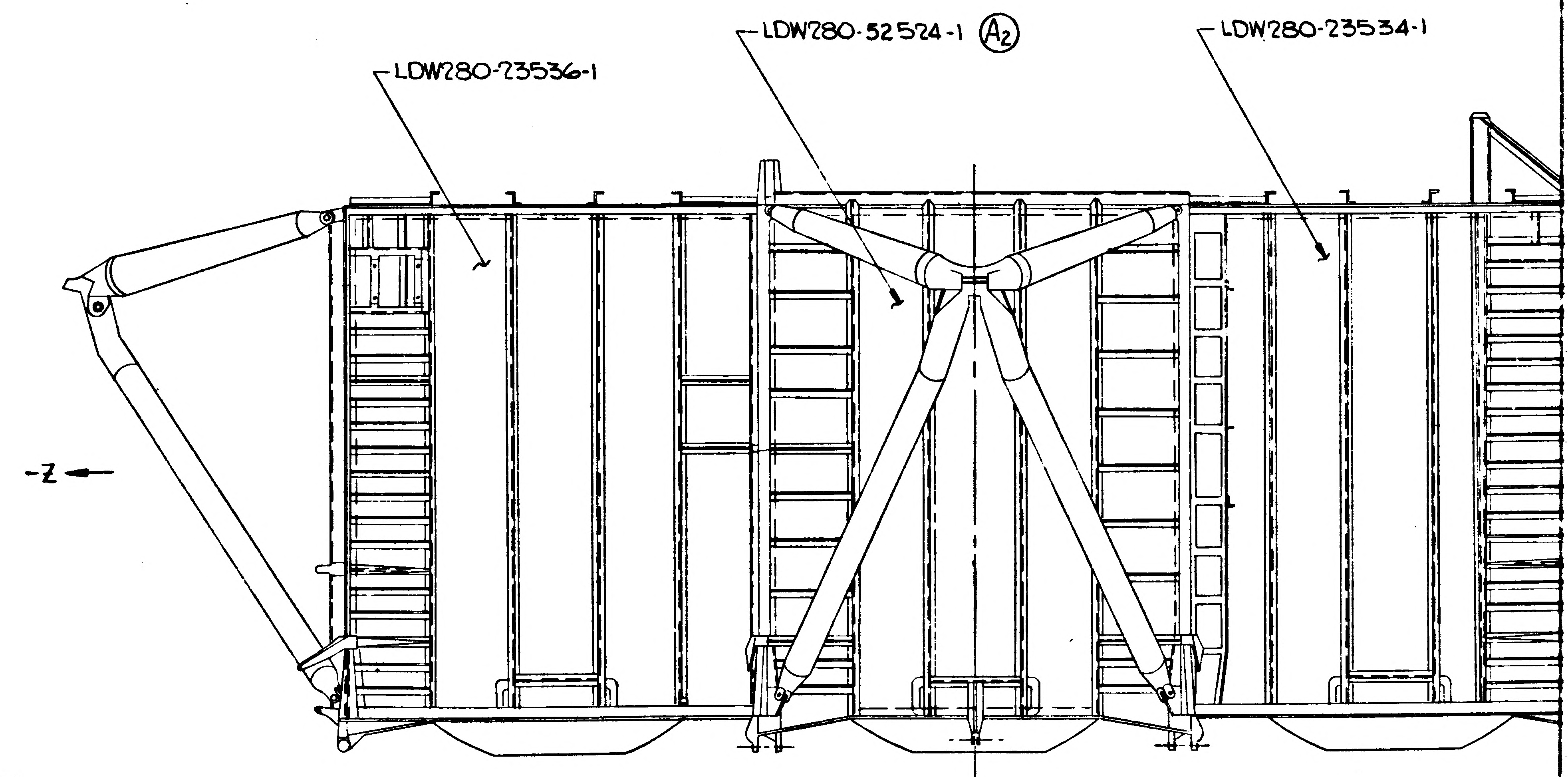

LDW280-52524-1 (A2)
LDW280-23534-1
LDW280-23536-1
-Z

E

VIEW C-C
LOOKING INBD-R.H. SIDE

01/03 NAS 9-1100

CODE IDENT NO 26512	
LDW280-52510	SH 3

3/3

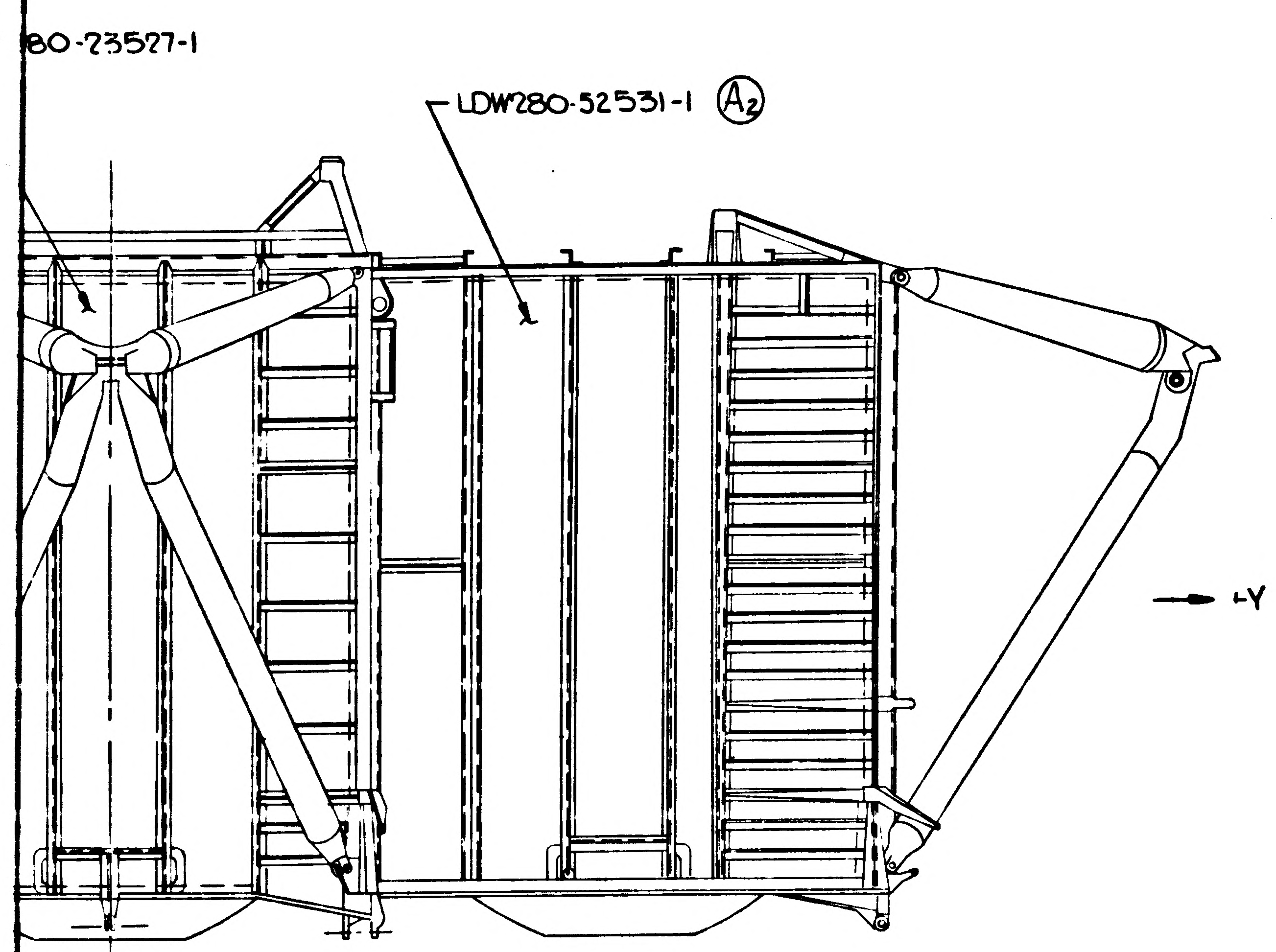
80-23527-1
LDW280-52531-1 A2
→ +Y

VIEW D-D
(ROTATED 90° CCW)
LOOKING FWD

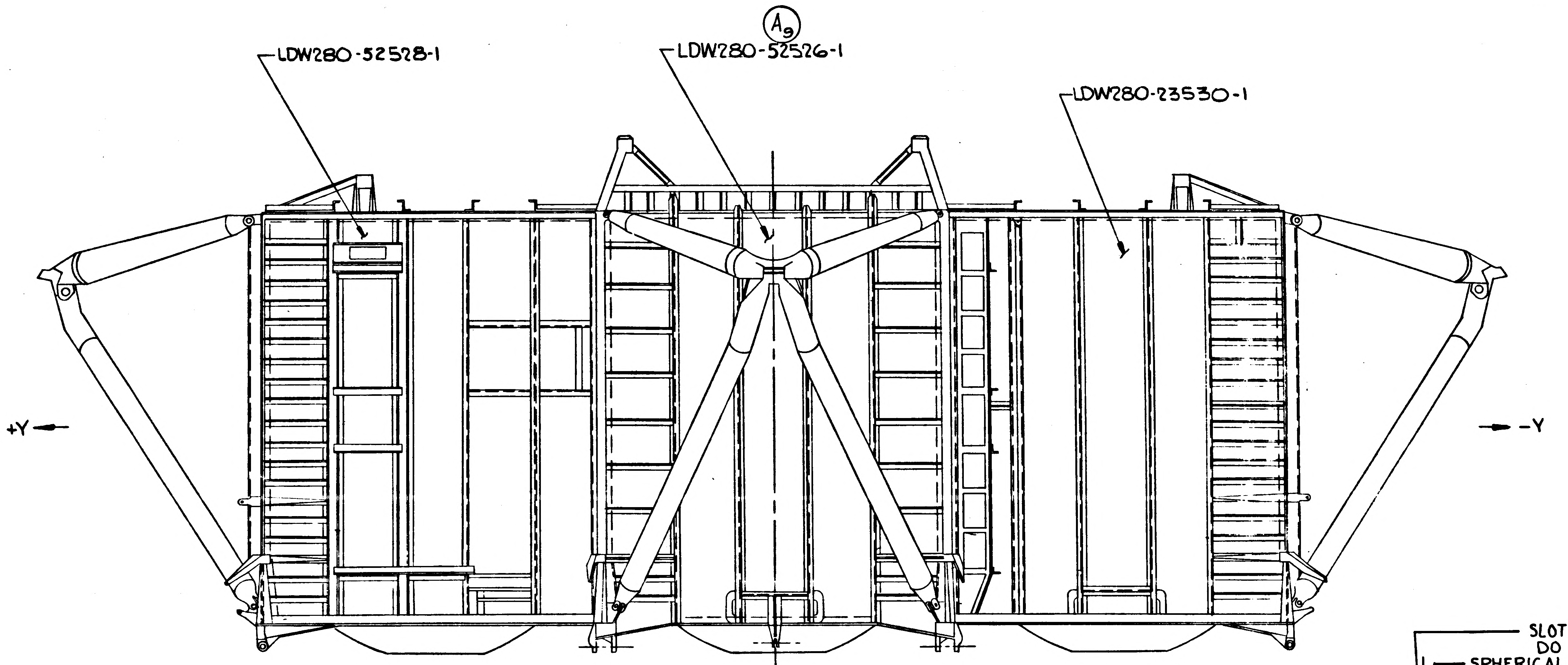
LDW280-52528-1
A9
LDW280-52526-1
LDW280-23530-1
+Y ←
→ -Y

VIEW B-B
(ROTATED 90° CW)
LOOKING AFT

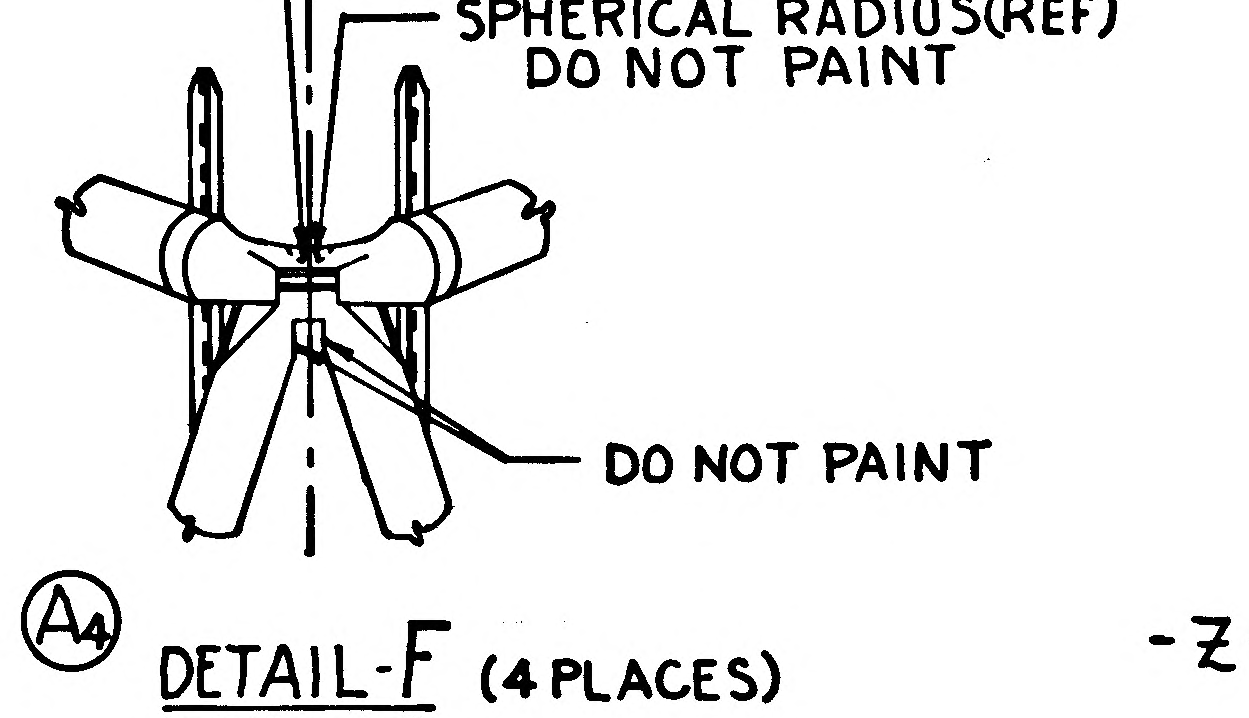
SLOTTED SURFACE(REF)
DO NOT PAINT
SPHERICAL RADIUS(REF)
DO NOT PAINT
DO NOT PAINT

A4 DETAIL-F (4 PLACES)
(ZONE 6B)

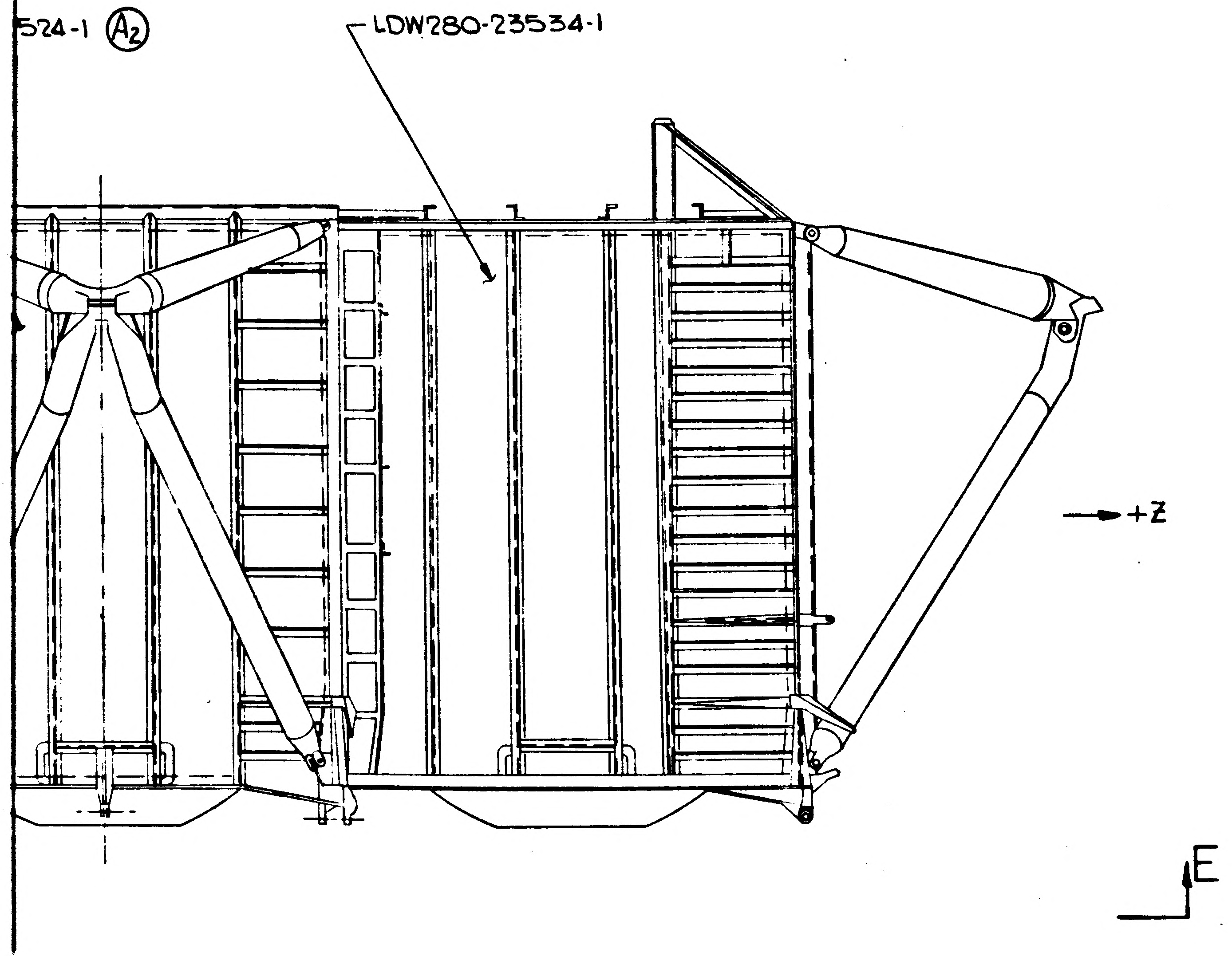
524-1 A2
LDW280-23534-1
→ +Z
E

VIEW C-C
LOOKING INBD-RH SIDE

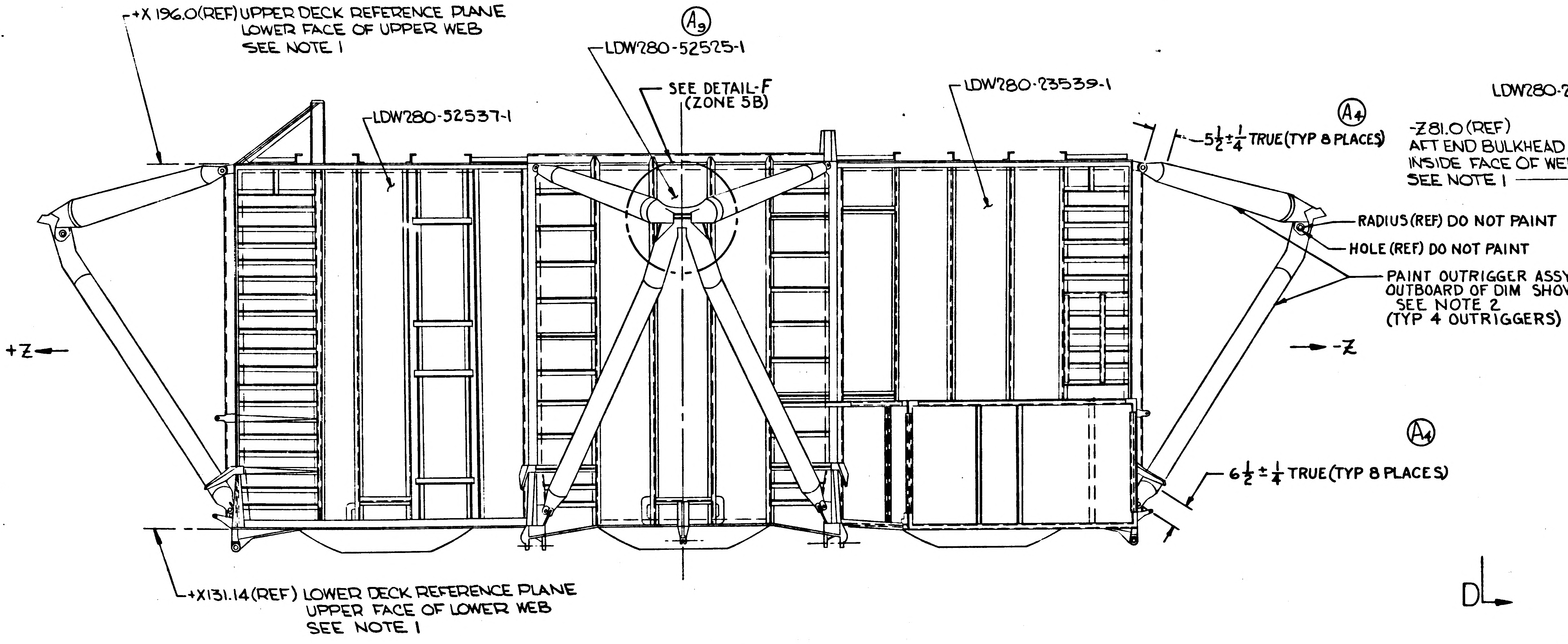
+X 196.0(REF) UPPER DECK REFERENCE PLANE
LOWER FACE OF UPPER WEB
SEE NOTE 1
A9
LDW280-52525-1
SEE DETAIL-F
(ZONE 5B)
LDW280-52537-1
LDW280-23539-1
A4
5½ ± ¼ TRUE (TYP 8 PLACES)
RADIUS (REF) DO NOT PAINT
HOLE (REF) DO NOT PAINT
PAINT OUTRIGGER ASSY
OUTBOARD OF DIM SHOWN
SEE NOTE 2
(TYP 4 OUTRIGGERS) A4
+Z ←
→ -Z
A4
6½ ± ¼ TRUE (TYP 8 PLACES)
+X131.14(REF) LOWER DECK REFERENCE PLANE
UPPER FACE OF LOWER WEB
SEE NOTE 1
D

VIEW A-A
(ROTATED 180°)
LOOKING INBD-LH SIDE

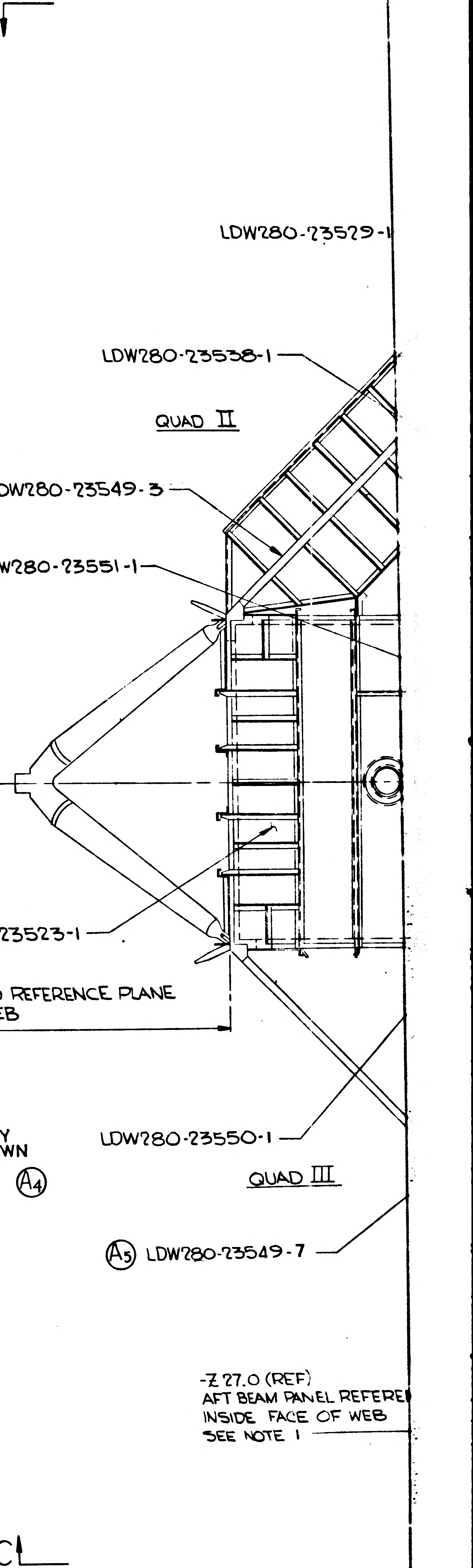
A
D
LDW280-23529-1
LDW280-23538-1
QUAD II
LDW280-23549-3
LDW280-23551-1
-Z ←
LDW280-23523-1
-Z81.0 (REF)
AFT END BULKHEAD REFERENCE PLANE
INSIDE FACE OF WEB
SEE NOTE 1
LDW280-23550-1
QUAD III
A5 LDW280-23549-7
-Z 27.0 (REF)
AFT BEAM PANEL REFERE
INSIDE FACE OF WEB
SEE NOTE 1
C

CODE IDENT NO 26512
LDW280-52510 SH 3

02/031 NAS 9-1100

CODE IDENT NO 26512
LDW280-52510 SH 3

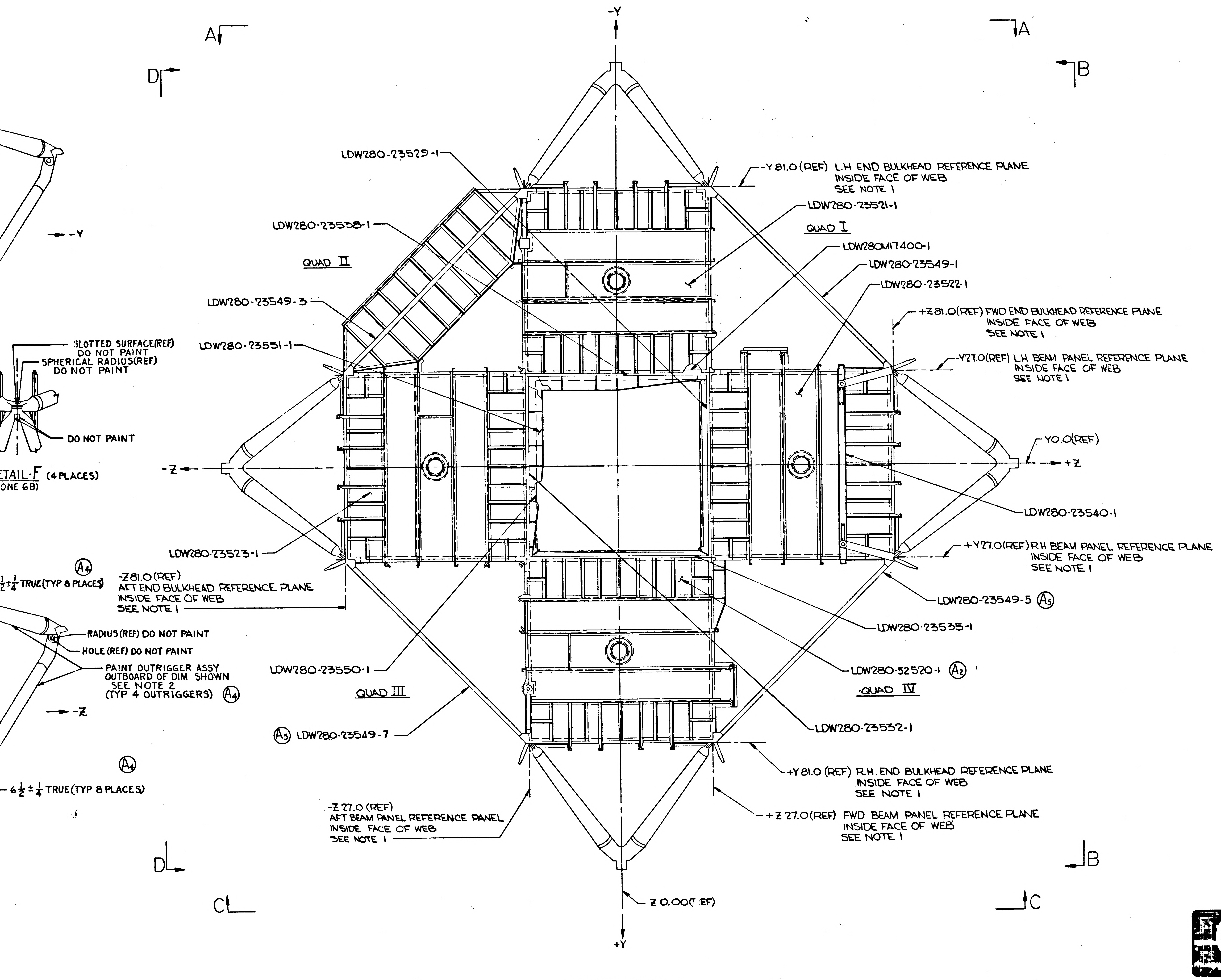
-Y
A
A
D
B
LDW280-23529-1
-Y 81.0 (REF) L.H END BULKHEAD REFERENCE PLANE INSIDE FACE OF WEB SEE NOTE 1
LDW280-23521-1
QUAD I
LDW280-23538-1
QUAD II
LDW280M17400-1
LDW280-23549-1
LDW280-23522-1
LDW280-23549-3
+Z 81.0 (REF) FWD END BULKHEAD REFERENCE PLANE INSIDE FACE OF WEB SEE NOTE 1
LDW280-23551-1
-Y 27.0 (REF) L.H BEAM PANEL REFERENCE PLANE INSIDE FACE OF WEB SEE NOTE 1
SLOTTED SURFACE (REF) DO NOT PAINT
SPHERICAL RADIUS (REF) DO NOT PAINT
DO NOT PAINT
→ -Y
ETAIL-F (4 PLACES)
ONE 6B)
-Z
Y 0.0 (REF)
+Z
LDW280-23540-1
LDW280-23523-1
A4
½ ± ¼ TRUE (TYP 8 PLACES)
-Z 81.0 (REF) AFT END BULKHEAD REFERENCE PLANE INSIDE FACE OF WEB SEE NOTE 1
+Y 27.0 (REF) R.H BEAM PANEL REFERENCE PLANE INSIDE FACE OF WEB SEE NOTE 1
LDW280-23549-5 A5
RADIUS (REF) DO NOT PAINT
HOLE (REF) DO NOT PAINT
PAINT OUTRIGGER ASSY OUTBOARD OF DIM SHOWN SEE NOTE 2 (TYP 4 OUTRIGGERS) A4
LDW280-23535-1
LDW280-23550-1
LDW280-52520-1 A2
QUAD III
QUAD IV
→ -Z
A5 LDW280-23549-7
LDW280-23532-1
A4
+Y 81.0 (REF) R.H. END BULKHEAD REFERENCE PLANE INSIDE FACE OF WEB SEE NOTE 1
6½ ± ¼ TRUE (TYP 8 PLACES)
-Z 27.0 (REF) AFT BEAM PANEL REFERENCE PANEL INSIDE FACE OF WEB SEE NOTE 1
+Z 27.0 (REF) FWD BEAM PANEL REFERENCE PLANE INSIDE FACE OF WEB SEE NOTE 1
D
B
C
C
Z 0.00 (REF)
+Y

LDW280-52510-1
VIEW LOOKING DOWN

NOTE
1- FOR BASIC JIG DATA (DIMENSIONS AND TOLERANCES) SEE LDW280-23511.
2. PAINT AREAS INDICATED PER LDW280-17869. IT IS PERMISSABLE TO CURE FOR 8 HOURS AT 135°F. IN LIEU OF 4 HOURS AT 200°F.

MANUFACTURING OPERATIONS
UNLESS OTHERWISE SPECIFIED
NOTES CHECKED √ APPLY TO THIS DWG.

PART NUMBER AND ALL OTHER MARKINGS IN REGION MARKED ☒ USE BOTH SIDES IF NECESSARY.	
FILLET AND INSIDE CORNER RADII TOLERANCES .016R TO .062R ± .010 .063R TO .250R ± .015 OVER .250R ± .030	
DEPTH SHOWN FOR TAPPED HOLES IS FULL THDS. 2-3 IMP THDS. BEYOND PERMISSIBLE.	
EXTERNAL THREAD LENGTH SHOWN INCLUDES 2 IMPERFECT THREADS MAX.	
DO NOT CADMIUM PLATE & PAINT HOLES OR SURFACES MARKED WITH DOUBLE ASTERISK.	
MISMATCH STEP OF ± .005 PERMISSIBLE DUE TO CHANGE OF CUTTERS AT INSIDE INTERSECTING SURFACES.	
DIAMETERS MARKED MUST BE CONCENTRIC WITHIN FULL INDICATOR READING	
HOLES MUST BE KEPT FREE OF CHROME PLATING SOLUTION.	
ALL DIMENSIONS SHOWN TO BE MET AFTER CADMIUM PLATING. THICKNESS OF PLATE .0003 MIN. TO .0005 MAX. MIN. THICKNESS TO BE .0002 ON THREADED AREAS. NO ALLOWANCE FOR PLATING IN HOLES	
125 √ SURFACE ROUGHNESS INCLUDING REAMED HOLES PER MIL-STD-10	
200 √ FOR ALL DRILLED HOLES	
REMOVE ALL BURRS. BREAK ALL EDGES .015-.031	
INSPECTION INFORMATION MINIMUM PERMISSIBLE AVERAGE EDGE DISTANCE MARKED IS	
SYMBOL √ DENOTES SURFACE TO BE MACHINED	
UNLESS OTHERWISE SPECIFIED TOLERANCE ON FLANGES IS ± 1/32	
LENGTHS OF AN, NAS & MS AL ALY RIVETS SHORTER THAN 1 INCH ARE NOT SPECIFIED.	
TOLERANCE ON LOFTED DELINEATIONS IS	

DWG SIZE 34 X 126

PRINTING INFO ONLY
FULL SIZE SHEET AREA (36 X 128) - 32 SQ. FT.
1/2 SIZE SHEET AREA (1/4 OF FULL) - 8 SQ. FT.

PRINT TRIM LINE

LDW280-52510 A

LDW280-52510 A

03/03

NAS 9-1100

CODE IDENT NO 26512
LDW280-52510 SH 3

	GRUMMAN AIRCRAFT ENGRG CORP., BETHPAGE, L. I., NEW YORK			
LM	SIZE J	CODE IDENT NO. 26512	LDW280-52510	A
MODEL OR END ITEM	SCALE 1/10		SHEET 3.00	

3FR

THIS IS AN ORIGINAL DWG

01 NAS 9-1100

ENG 32.2 REV 3-65

GRUMMAN AIRCRAFT ENGINEERING CORP.
CODE IDENT NO. 26512
ENGINEERING ORDER

*

DWG. NO. LEO 280 | EO NO. 250
CONTROL INFO NO. LDW280A-0205

PAINT AREAS INDICATED.

ADD NOTE * PAINT AREAS INDICATED PER LDW280-17869

* = NEXT AVAILABLE NOTE NUMBER

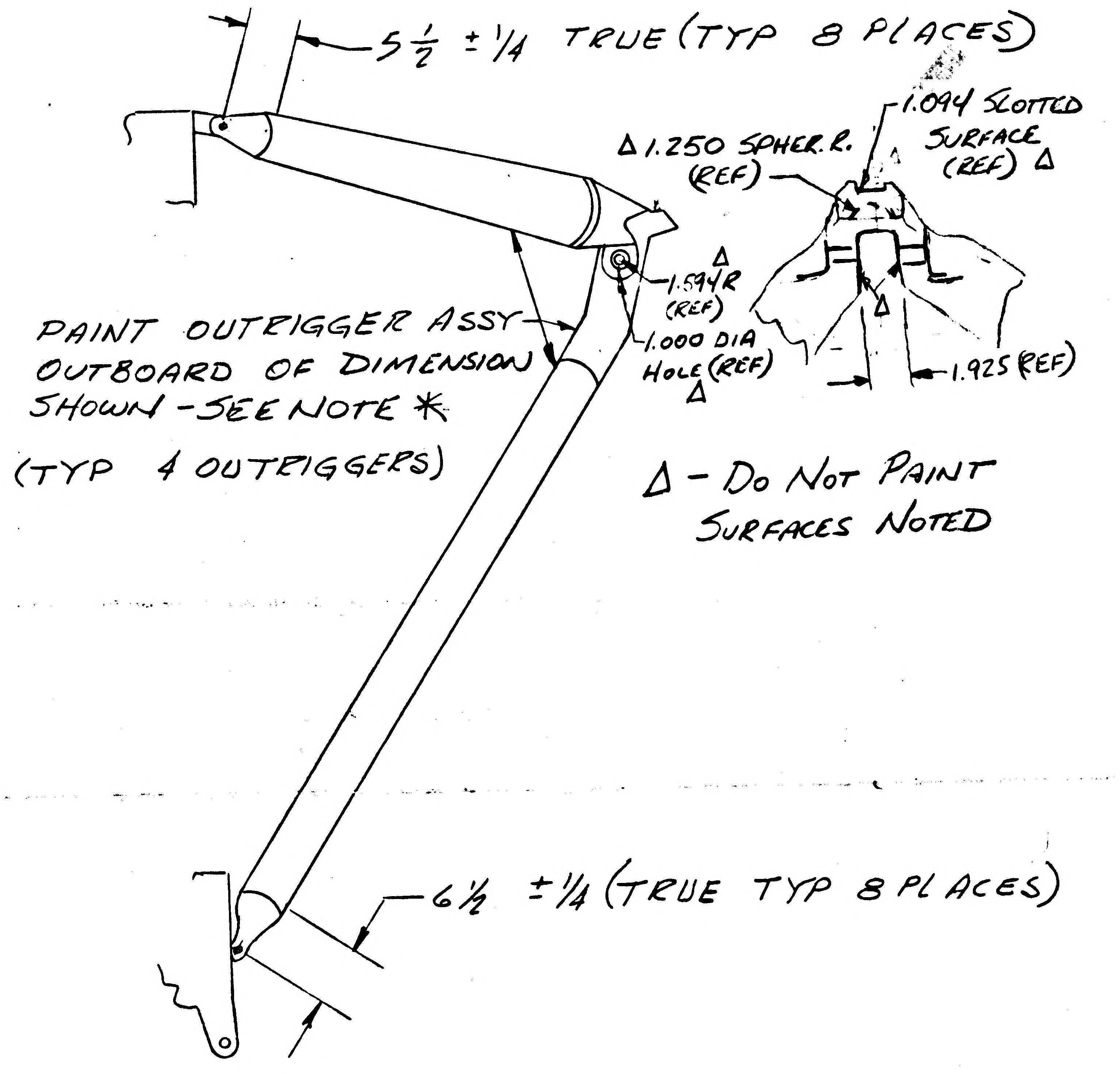
5½ ± ¼ TRUE (TYP 8 PLACES)
Δ 1.250 SPHER. R. (REF)
1.094 SLOTTED SURFACE (REF) Δ
Δ 1.594 R (REF)
1.000 DIA HOLE (REF) Δ
1.925 (REF)
PAINT OUTRIGGER ASSY OUTBOARD OF DIMENSION SHOWN - SEE NOTE *
(TYP 4 OUTRIGGERS)
Δ - DO NOT PAINT SURFACES NOTED
6½ ± ¼ (TRUE TYP 8 PLACES)

DWG #	TITLE	E.O. #	EFF.
LDW280-52510	STRUCTURE ASSY D/S	A4	LEM 2 (32)
LDW 280-53510	" " "	A3	LEM 3 (33)
LDW 280-54510	" " "	A4	LEM 4 (34) LEM 5 (35) LEM 6 (36)

5

DETAIL SPEC REQ		CL II ENGRG CHG		CL I ENGRG CHG								
REASON FOR EO: ADD PAINTING REQUIREMENT FOR THERMAL CONTROL				DESCRIPTION OF EO: IN F/D ADD NOTE * ADDED DIMENSIONS 6½ ± ¼ & 5½ ± ¼ TRUE								GAEC EO RELEASE: ® 9-8
MODEL	EFFECTIVITY: PROCURING ACTIVITY NO.	GAEC UNIT NO.	SUB CONTR UNIT NO.	DRAWING CHANGE REQD		DISPOSITION OF PARTS		APPROVED BY				
LEM		SEE ABOVE		✓ REVISE DWG	RECORD EO	✓ REWORK	SCRAP					
								DATE	9/1/66 VDI	9/7/66 ~~SUPPORT~~ MAT'S	9-1[illegible] RELIAB. GROUP WTS	GROUP LEADER

APPROVED BY: FXD; AAR; RMC; STRESS GROUP 9/7/66; LIAISON ENGRG; PROJ ENGRG 9-8; 9-7-66

PRIORITY	DRAWING TITLE	DRAWING NO.	EO NO.
C	SEE ABOVE	LEO 280	250

ISSUED BY P. WEISSLITZ / J. STRAKOSCH X1153 SECTION VDI GROUP NO. 351 PL 31 CMF

WH

ENG 32.1 REV 3-65

*

GRUMMAN AIRCRAFT ENGINEERING CORP.
CODE IDENT NO. 26512
ENGINEERING ORDER

DWG. NO. LDW280-52510
EO NO. A5
CONTROL INFO NO. LM-2-2825

FOR -1 ASSY
IN FLD/DWG & B/M
REPLACE LDW280-23549-2 WITH LDW280-23549-5
REPLACE LDW280-23549-4 WITH LDW280-23549-7

DETAIL SPEC REQ		CL II ENGRG CHG		CL I ENGRG CHG	

REASON FOR EO	DESCRIPTION OF EO	GAEC EO RELEASE
RELOCATION OF THERMAL SHIELD SUPPORT	FOR-1 ASSY, IN FLD/DWG & B/M REPLACED LDW280-23549-2 WITH LDW280-23549-5 REPLACED LDW280-23549-4 WITH LDW280-23549-7	6

MODEL	EFFECTIVITY		
	PROCURING ACTIVITY NO.	GAEC UNIT NO.	SUB CONTR UNIT NO.
LM		LM2(32)	

DRAWING CHANGE REQD		DISPOSITION OF PARTS	
✓		✓	
REVISE DWG	RECORD EO	REWORK	SCRAP

APPROVED BY	JRS				caw	caw	[illegible]	[illegible]
DATE	10/8				9-29-66	9-25-66	9-30-66	9-27-66
9/27/66	VDI	SUPPORT	RELIAB. GROUP	~~GROUP~~ LEADER	STRESS GROUP	LIAISON ENGRG	PROJ ENGRG	GOVT

PRIORITY	DRAWING TITLE	DRAWING NO.	EO NO.
C	STRUCTURAL INSTALLATION DESCENT STAGE~UPPER DIAGONAL	LDW280-52510	A5

ISSUED BY LIAISON J. MALONEY X3604
SECTION V.D.I.
GROUP NO. 335
PL 35

01

NAS 9-1100

ENG 32.1 REV 3-65

GRUMMAN AIRCRAFT ENGINEERING CORP.
CODE IDENT NO. 26512
ENGINEERING ORDER EMF *

DWG NO. LDW 280-52510
EO NO. B1
CONTROL INFO NO. LDW 280 A 5255

OH-1 LDW 280-23569-1 S/B -3

DETAIL SPEC REQ ☐ CL II ENGRG CHG ☐ CL I ENGRG CHG ☐

REASON FOR EO: DWG CORRECTION

DESCRIPTION OF EO: OH-1 LDW 280-23569-3 WAS -1

GAEC EO RELEASE: 1/27/7

MODEL	PROCURING ACTIVITY NO.	GAEC UNIT NO	SUB CONTR UNIT NO.
LM		NOT REQD	

DRAWING CHANGE REQD: REVISE DWG ✓ RECORD EO

DISPOSITION OF PARTS: NOT REQD (REWORK / SCRAP)

	APPROVED BY	SUPPORT	RELIAB. GROUP	GROUP LEADER	STRESS GROUP	LIAISON ENGRG	PROJ ENGRG	
DATE	1/26/67			1/26/67	1/26/67		1-27-67	1-27-67
6	V.D.I.							

PRIORITY: E

DRAWING TITLE: STRUCTURAL ASSY DESCENT STAGE

DRAWING NO. LDW 280-52510

EO NO. B1

ISSUED BY GUS HANSMANN X1153 SECTION V.D.I. GROUP NO. 280 PL 35

01

NAS 9-1100

B

ENG 32.1 REV 3-65

GRUMMAN AIRCRAFT ENGINEERING CORP.
CODE IDENT NO. 26512
ENGINEERING ORDER

DWG. NO. LDW280-52510
EO NO. B2
CONTROL INFO NO. LM-2-3569

FOR -1
IN FLD/DWG & B/M
LDW280-23521-1 SHOULD BE LDW280-23521-5
LDW280-23522-1 SHOULD BE LDW280-23522-5

DETAIL SPEC REQ	☐	CL II ENGRG CHG	✓	CL I ENGRG CHG	☐

2

REASON FOR EO: WEIGHT CONTROL REQMTS

DESCRIPTION OF EO: FOR -1, IN FLD & B/M, LDW280-23521-5 WAS -1 & LDW280-23522-5 WAS -1.

GAEC EO RELEASE: C
JK
02131

MODEL	EFFECTIVITY: PROCURING ACTIVITY NO.	EFFECTIVITY: GAEC UNIT NO.	EFFECTIVITY: SUB CONTR UNIT NO.
LM		LM-2(32)	

DRAWING CHANGE REQD: REVISE DWG	DRAWING CHANGE REQD: RECORD EO	DISPOSITION OF PARTS: REWORK	DISPOSITION OF PARTS: SCRAP
✓		✓	

APPROVED BY				~			DAM
DATE	7/6/67			~	5/8/67	5/8/67	5-12-67
-1-	VDI	SUPPORT	RELIAB. GROUP	GROUP LEADER	STRESS GROUP	LIAISON ENGRG	PROJ ENGRG

GOVT: 5/8/67

PRIORITY	DRAWING TITLE	DRAWING NO.	EO NO.
C	STRUCTURAL ASSY DESCENT STAGE	LDW280-52510	B2

ISSUED BY LIAISON J. MALONEY 5/8/67 X3604 SECTION V.D.I. GROUP NO. 335 PL 25

01 NAS 9-1100

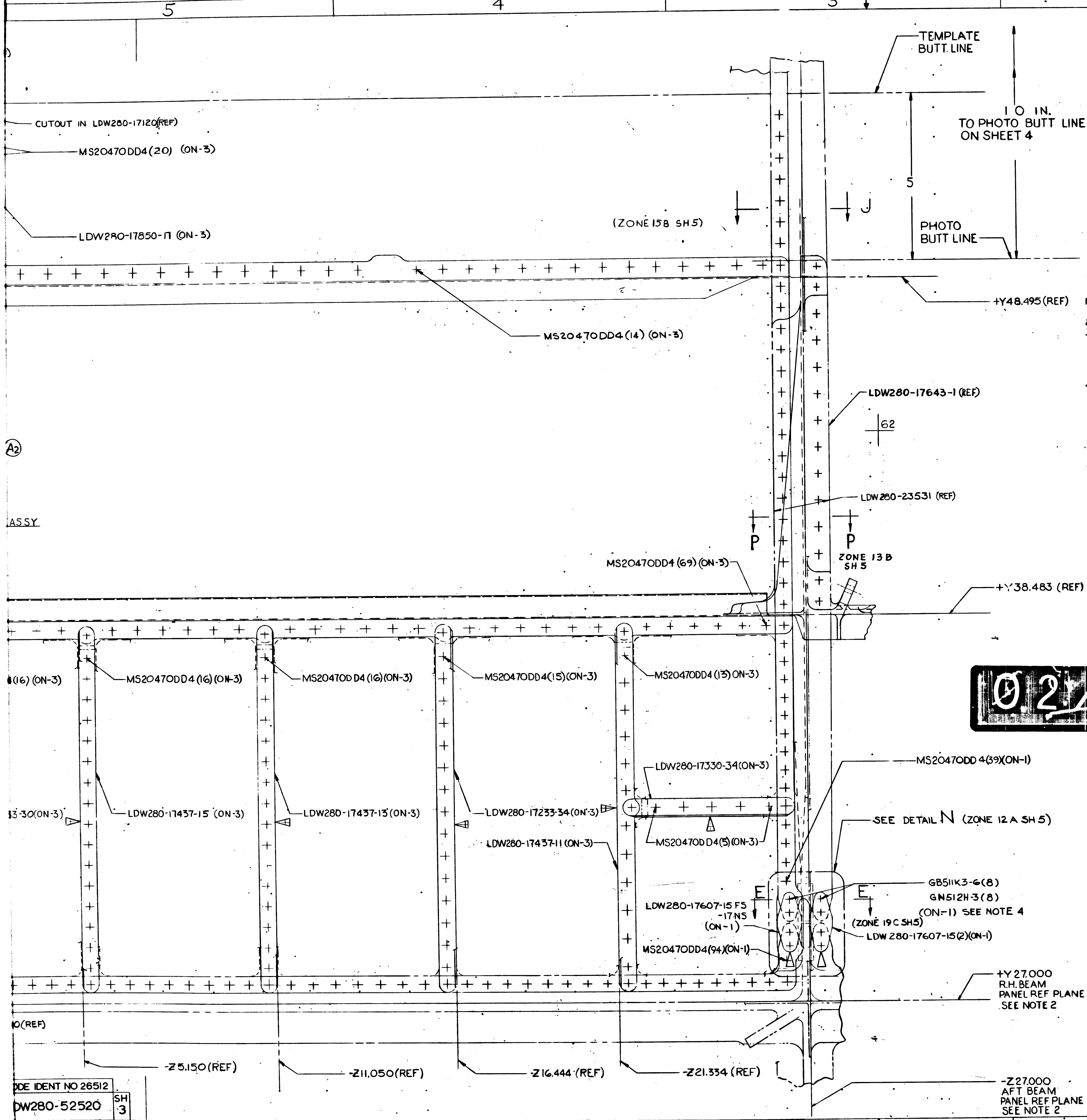
TEMPLATE BUTT. LINE
1 0 IN. TO PHOTO BUTT LINE ON SHEET 4
5
PHOTO BUTT LINE
CUTOUT IN LDW280-17120(REF)
MS20470DD4(20) (ON-3)
LDW280-17850-17 (ON-3)
(ZONE 15B SH5)
J
MS20470DD4(14) (ON-3)
+Y48.495(REF)
LDW280-17643-1 (REF)
62
A2
LDW280-23531 (REF)
ASSY
P
P
ZONE 13 B SH 5
MS20470DD4 (69) (ON-3)
+Y38.483 (REF)
(16) (ON-3)
MS20470DD4 (16) (ON-3)
MS20470DD4 (16) (ON-3)
MS20470DD4(15) (ON-3)
MS20470DD4 (13) ON-3)
LDW280-17330-34(ON-3)
MS20470DD 4(39)(ON-1)
3-30(ON-3)
LDW280-17437-15 (ON-3)
LDW280-17437-13 (ON-3)
LDW280-17233-34 (ON-3)
LDW280-17437-11 (ON-3)
MS20470DD4(5)(ON-3)
SEE DETAIL N (ZONE 12 A SH 5)
E
E
GB511K3-6(8)
GN512H-3(8)
(ON-1) SEE NOTE 4
LDW280-17607-15 FS
-17NS
(ON-1)
(ZONE 19C SH5)
LDW 280-17607-15(2)(ON-1)
MS20470DD4(94)(ON-1)
+Y 27.000
R.H. BEAM
PANEL REF PLANE
SEE NOTE 2
0(REF)
-Z5.150 (REF)
-Z11.050 (REF)
-Z16.444 (REF)
-Z21.334 (REF)
-Z27.000
AFT BEAM
PANEL REF PLANE
SEE NOTE 2
5
4
3
2
1

NOTES:
1. NO TOOLING HOLES PERMITTED IN PARTS.
2. FOR BASIC JIG DATA SEE LDW280-23511.
3. A) TOLERANCE ON LINES MARKED ◁ TO BE ± 1/64.
   B) TOLERANCE ON LINES MARKED ◁ TO BE ± 1/32.
   C) TOLERANCE ON LOFTED LOCATION OF FASTENERS THRU LDW280-17120-21 TO BE ± 1/32, OTHERS TO BE LOCATED FROM PILOT HOLES IN DETAIL PARTS.
4. INSTALL FASTENERS PER LSP14 15306

5. SHIM AS REQD USING AL ALLOY QQ-A-250/4 2024-T3 FINISH #88.
6. FASTENER MANUFACTURED HEAD (OTHER THAN CSK ATTACHMENTS) TO BE ON WEB SIDE UNLESS OTHERWISE SPECIFIED.

7 PERMISSIBLE OIL CAN DEPTH OF WEBS BETWEEN STIFFENERS IS ±.100.

02/03 NAS 9-1100

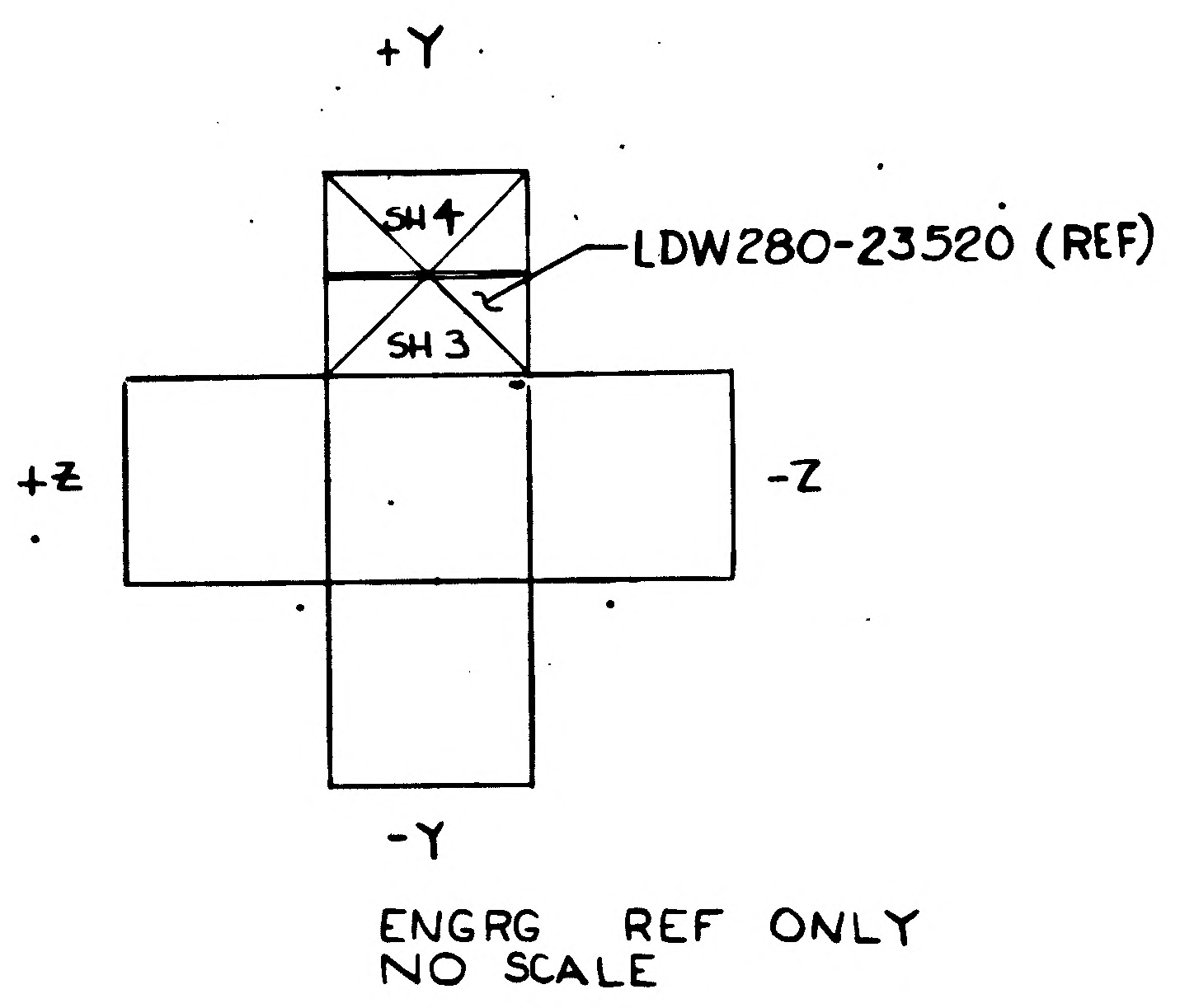
+Y
SH 4
SH 3
LDW280-23520 (REF)
+Z
-Z
-Y

ENGRG REF ONLY
NO SCALE

CODE IDENT NO 26512
LDW280-52520
SH 3

CODE IDENT NO 26512
LDW280-52520
SH 3

LM
MODEL OR END ITEM
GRUMMAN AIRCRAFT ENGRG CORP. BE
SIZE J
CODE IDENT NO. 26512
LDW28
SCALE FULL
FOR PHOTO RE

THIS IS AN ORIGINAL DWG 3 FRAM

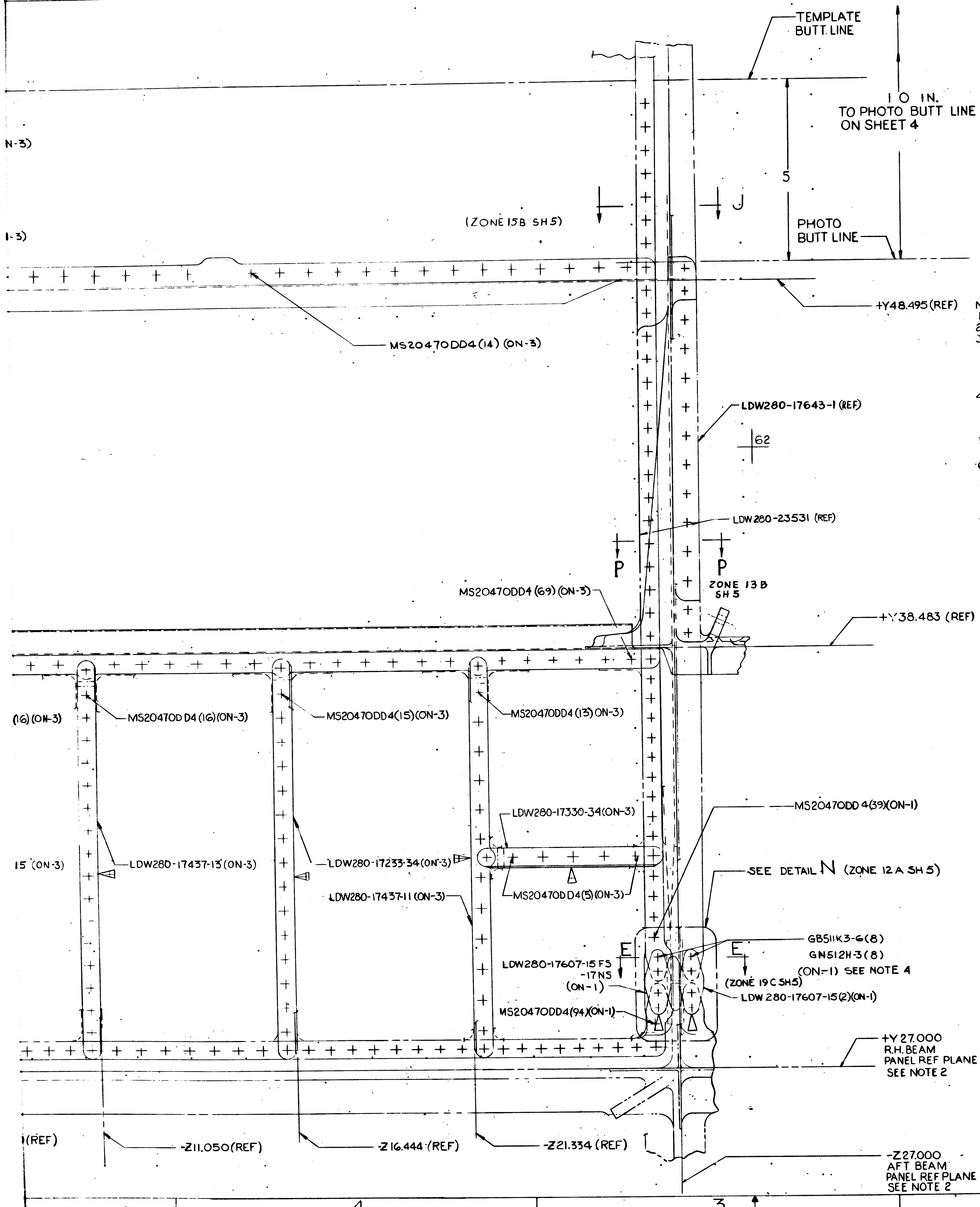
TEMPLATE BUTT. LINE
10 IN.
TO PHOTO BUTT LINE
ON SHEET 4
5
PHOTO BUTT LINE
J
(ZONE 158 SH5)
N-3)
I-3)
+Y48.495 (REF)
MS20470DD4(14) (ON-3)
LDW280-17643-1 (REF)
62
LDW280-23531 (REF)
P
P
ZONE 13 B SH 5
MS20470DD4(69) (ON-3)
+Y38.483 (REF)
(16) (ON-3)
MS20470DD4(16)(ON-3)
MS20470DD4(15)(ON-3)
MS20470DD4(13)(ON-3)
MS20470DD4(39)(ON-1)
LDW280-17330-34(ON-3)
15 (ON-3)
LDW280-17437-13(ON-3)
LDW280-17233-34(ON-3)
LDW280-17437-11 (ON-3)
MS20470DD4(5)(ON-3)
SEE DETAIL N (ZONE 12 A SH 5)
E
E
GB511K3-6(8)
GN512H-3(8)
(ON-1) SEE NOTE 4
LDW280-17607-15 FS
-17NS
(ON-1)
(ZONE 19C SH5)
LDW 280-17607-15(2)(ON-1)
MS20470DD4(94)(ON-1)
+Y 27.000
R.H. BEAM
PANEL REF PLANE
SEE NOTE 2
I(REF)
-Z11.050(REF)
-Z16.444 (REF)
-Z21.334 (REF)
-Z27.000
AFT BEAM
PANEL REF PLANE
SEE NOTE 2
4
3
4
3

NOTES:

1. NO TOOLING HOLES PERMITTED IN PARTS.
2. FOR BASIC JIG DATA SEE LDW280-23511.
3. A) TOLERANCE ON LINES MARKED ◁ TO BE ± 1/64.
   B) TOLERANCE ON LINES MARKED ◁ TO BE ± 1/32.
   C) TOLERANCE ON LOFTED LOCATION OF FASTENERS THRU LDW280-17120-21 TO BE ± 1/32, OTHERS TO BE LOCATED FROM PILOT HOLES IN DETAIL PARTS.
4. INSTALL FASTENERS PER LSP14 15306
5. SHIM AS REQD USING AL ALLOY QQ-A-250/4 2024-T3 FINISH #88.
6. FASTENER MANUFACTURED HEAD (OTHER THAN CSK ATTACHMENTS) TO BE ON WEB SIDE UNLESS OTHERWISE SPECIFIED.
7. PERMISSIBLE OIL CAN DEPTH OF WEBS BETWEEN STIFFENERS IS ± .100.

80

30

MANUFACTURING OPERATIONS UNLESS OTHERWISE SPECIFIED NOTES CHECKED ✓ APPLY TO THIS DWG.	
RUBBER STAMP PART NUMBER AND ALL OTHER MARKINGS IN REGION MARKED ☒ USE BOTH SIDES IF NECESSARY	✓
FILLET AND INSIDE CORNER RADII TOLERANCES .016R TO .062R ± .010 .063R TO .250R ± .015 OVER .250R ± .030	
DEPTH SHOWN FOR TAPPED HOLES IS FULL THDS. 2-3 IMP. THDS. BEYOND PERMISSIBLE	
EXTERNAL THREAD LENGTH SHOWN INCLUDES 2 IMPERFECT THREADS MAX.	
DO NOT CADMIUM PLATE & PAINT HOLES OR SURFACES MARKED WITH DOUBLE ASTERISK.	
MISMATCH STEP OF ± .005 PERMISSIBLE DUE TO CHANGE OF CUTTERS AT INSIDE INTERSECTING SURFACES.	
DIAMETERS MARKED MUST BE CONCENTRIC WITHIN FULL INDICATOR READING.	
HOLES MUST BE KEPT FREE OF CHROME PLATING SOLUTION.	
ALL DIMENSIONS SHOWN TO BE MET AFTER CADMIUM PLATING. THICKNESS OF PLATE .0003 MIN TO .0005 MAX MIN THICKNESS TO BE .0002 ON THREADED AREAS NO ALLOWANCES FOR PLATING IN HOLES	
125 √ SURFACE ROUGHNESS INCLUDING REAMED HOLES PER MIL STD-10	
200 √ FOR ALL DRILLED HOLES	
REMOVE ALL BURRS. BREAK ALL EDGES .015-.031	
INSPECTION INFORMATION MINIMUM PERMISSIBLE EDGE DISTANCE IS 1½ FASTENER DIA FROM FASTENER ℄	✓
SYMBOL √ DENOTES SURFACE TO BE MACHINED	
UNLESS OTHERWISE SPECIFIED TOLERANCE ON FLANGES IS ± 1/32	
LENGTHS OF AN, NAS & MS AL ALY RIVETS SHORTER THAN 1 INCH ARE NOT SPECIFIED	
TOLERANCE ON LOFTED DELINEATIONS IS ±1/16	✓

DWG SIZE 34 x 94

PRINTING INFO ONLY
MVL 36 x 96

C

B

A

LDW280-52520 A

LDW280-52520 A

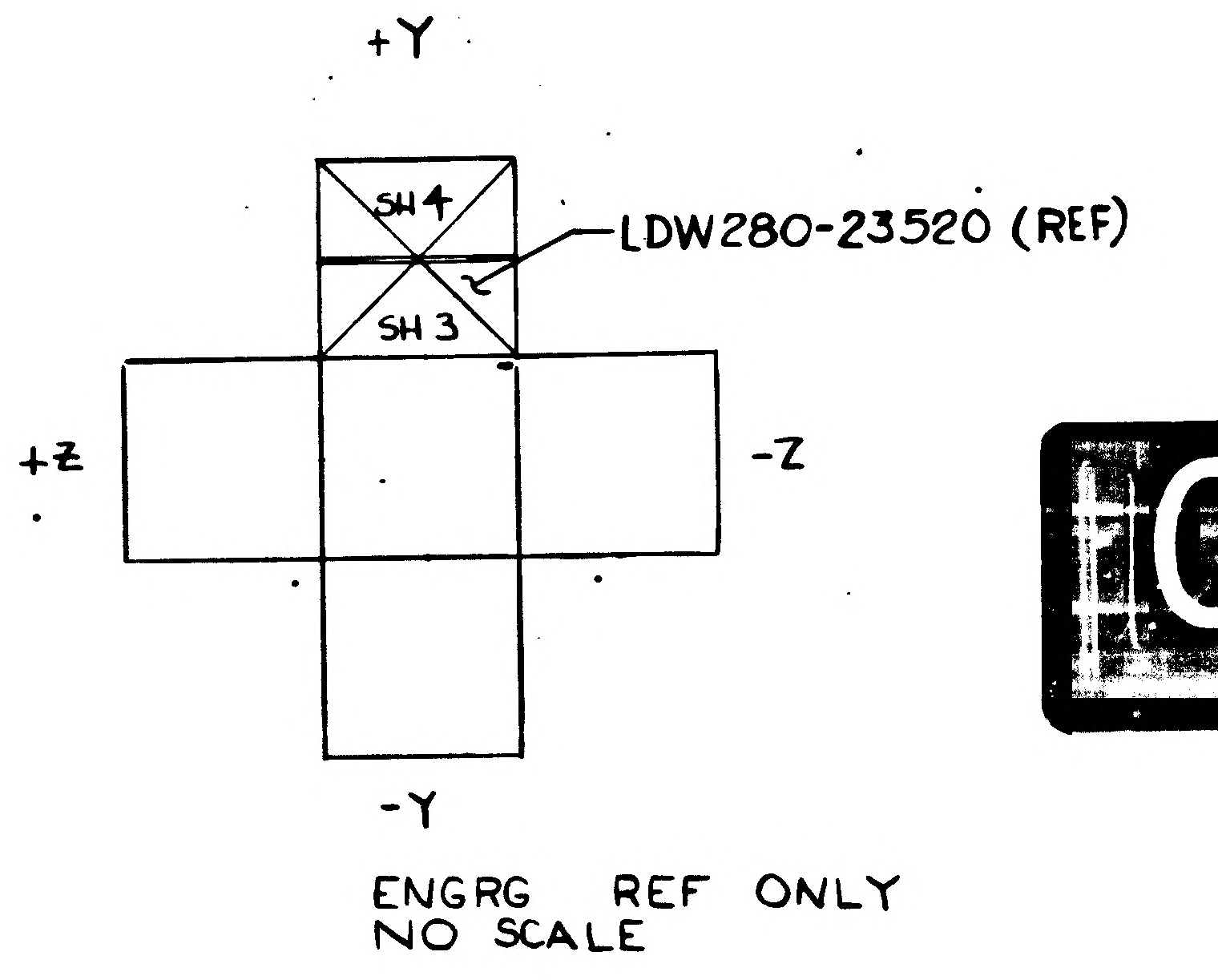
+Y
SH 4
SH 3
LDW280-23520 (REF)
+Z
-Z
-Y

ENGRG REF ONLY
NO SCALE

03/03 NAS 9-1100

LM
MODEL OF END ITEM

GRUMMAN AIRCRAFT ENGRG CORP. BETHPAGE, L. I., NEW YORK

SIZE	CODE IDENT NO.		
J	26512	LDW280-52520	A
SCALE FULL		SHEET 3.00	

CODE IDENT NO 26512
LDW280-52520 SH 3

2

FOR PHOTO REPRODUCTION

ENG 73-7 6-64

THIS IS AN ORIGINAL DWG 3 FRAMES

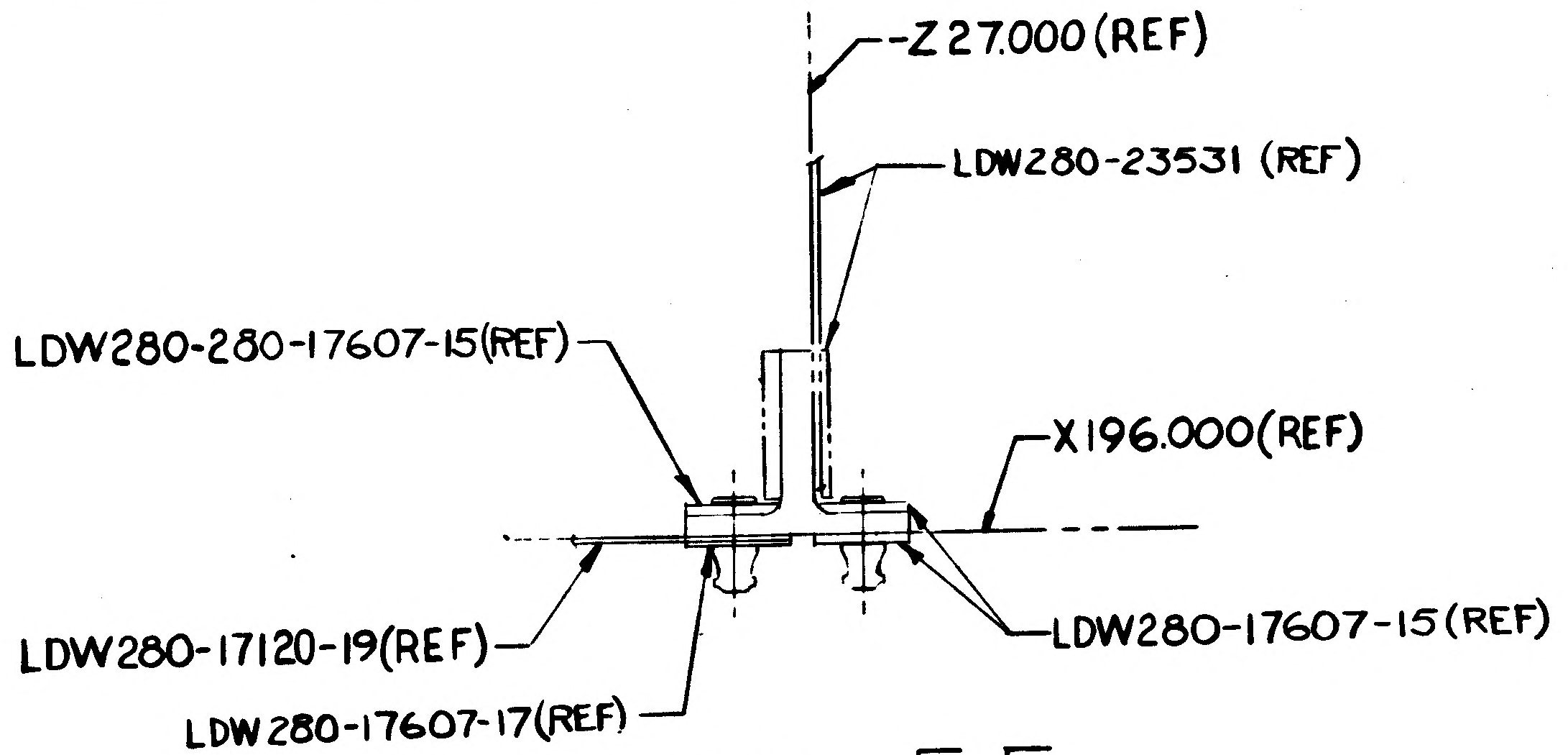
-Z 27.000 (REF)
LDW280-23531 (REF)
LDW280-280-17607-15(REF)
X196.000(REF)
LDW280-17120-19(REF)
LDW280-17607-15(REF)
LDW280-17607-17(REF)

SECTION E-E
(ZONE 3A SH3)

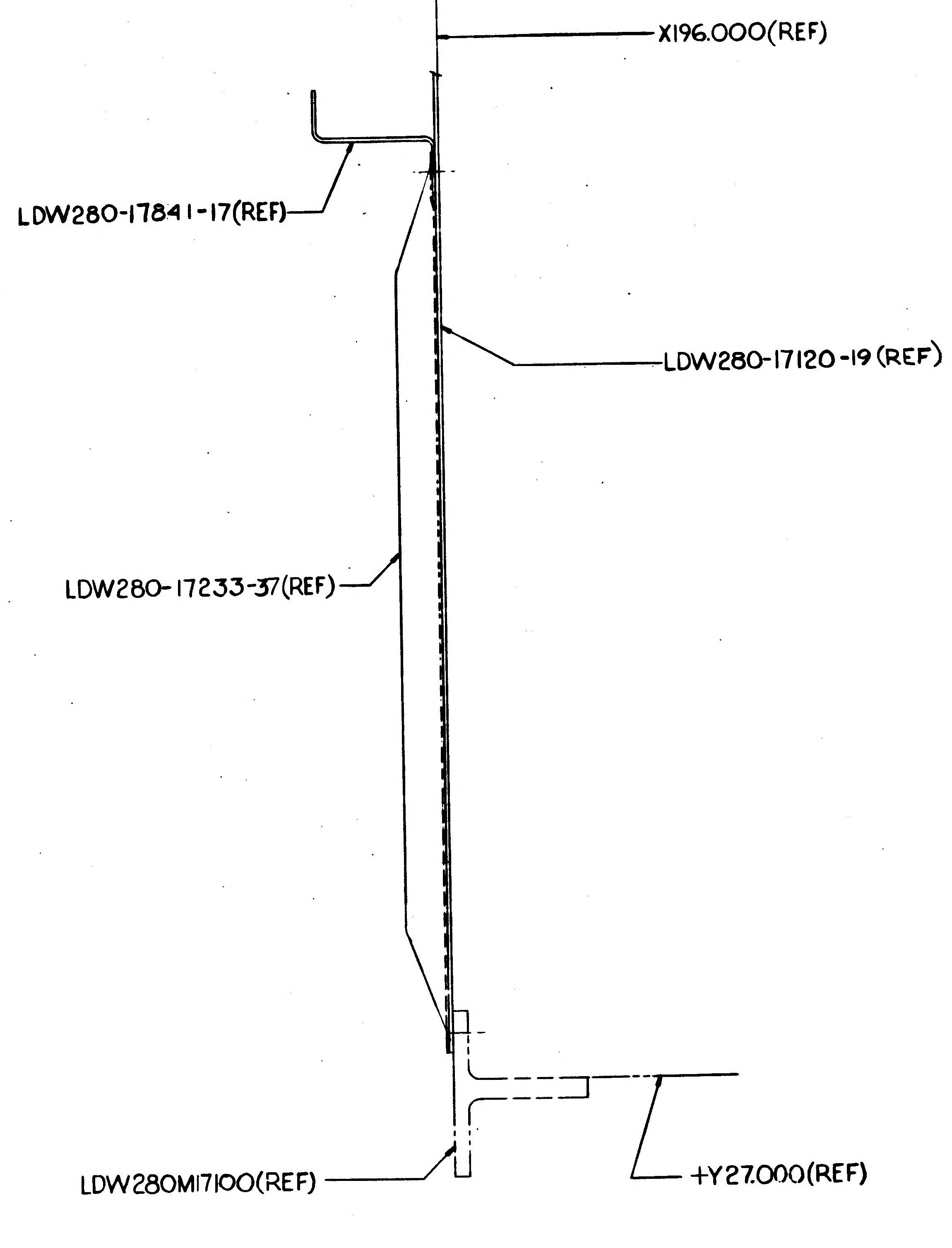
X196.000(REF)
LDW280-17841-17(REF)
LDW280-17120-19 (REF)
LDW280-17233-37(REF)
LDW280M17100(REF)
+Y27.000(REF)

SECTION G-G
(ZONE 6B SH3)

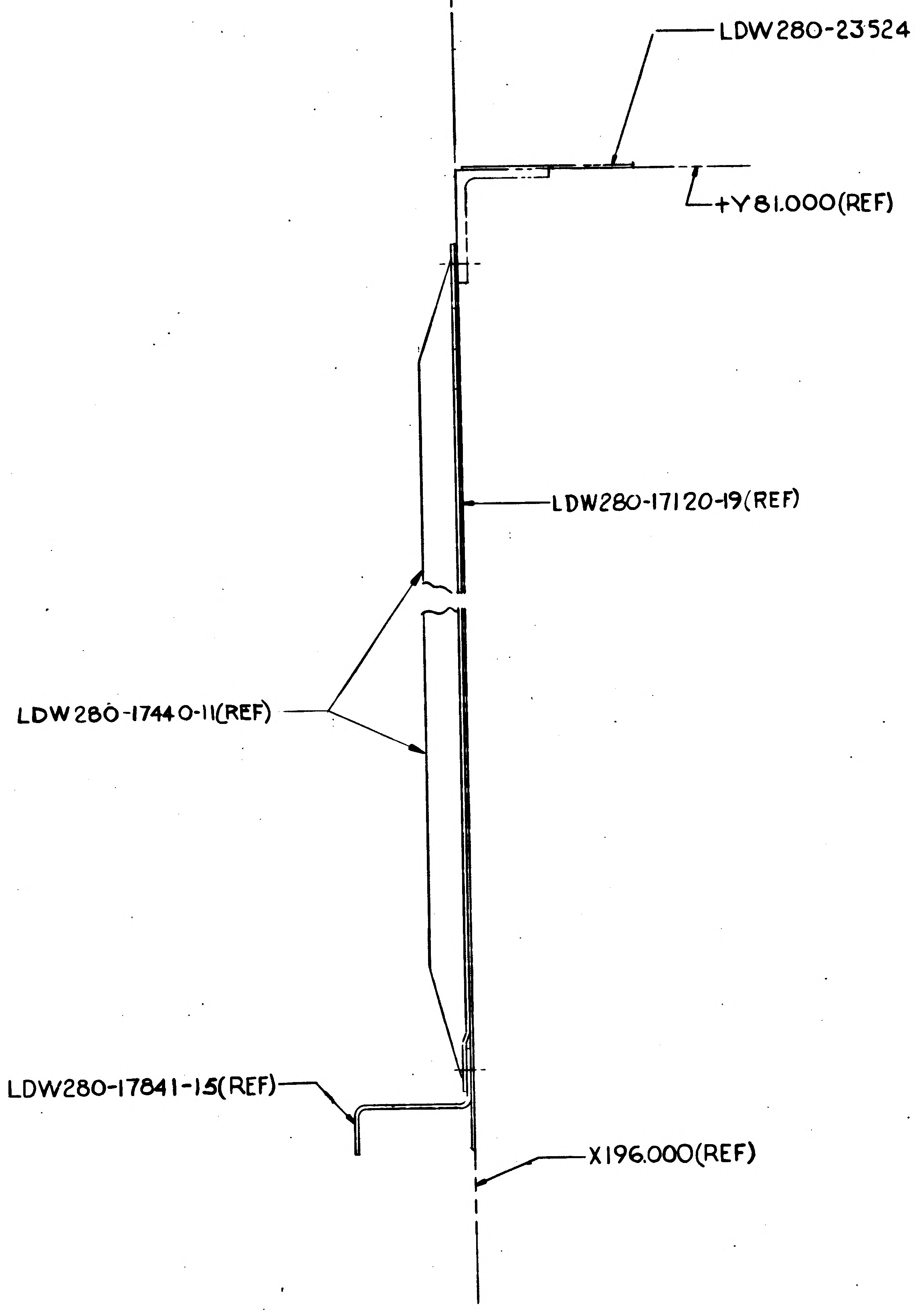
LDW280-23524(REF)
+Y81.000(REF)
LDW280-17120-19(REF)
LDW280-17440-11(REF)
LDW280-17841-15(REF)
X196.000(REF)

SECTION H-H
(ZONE 5E SH 4)

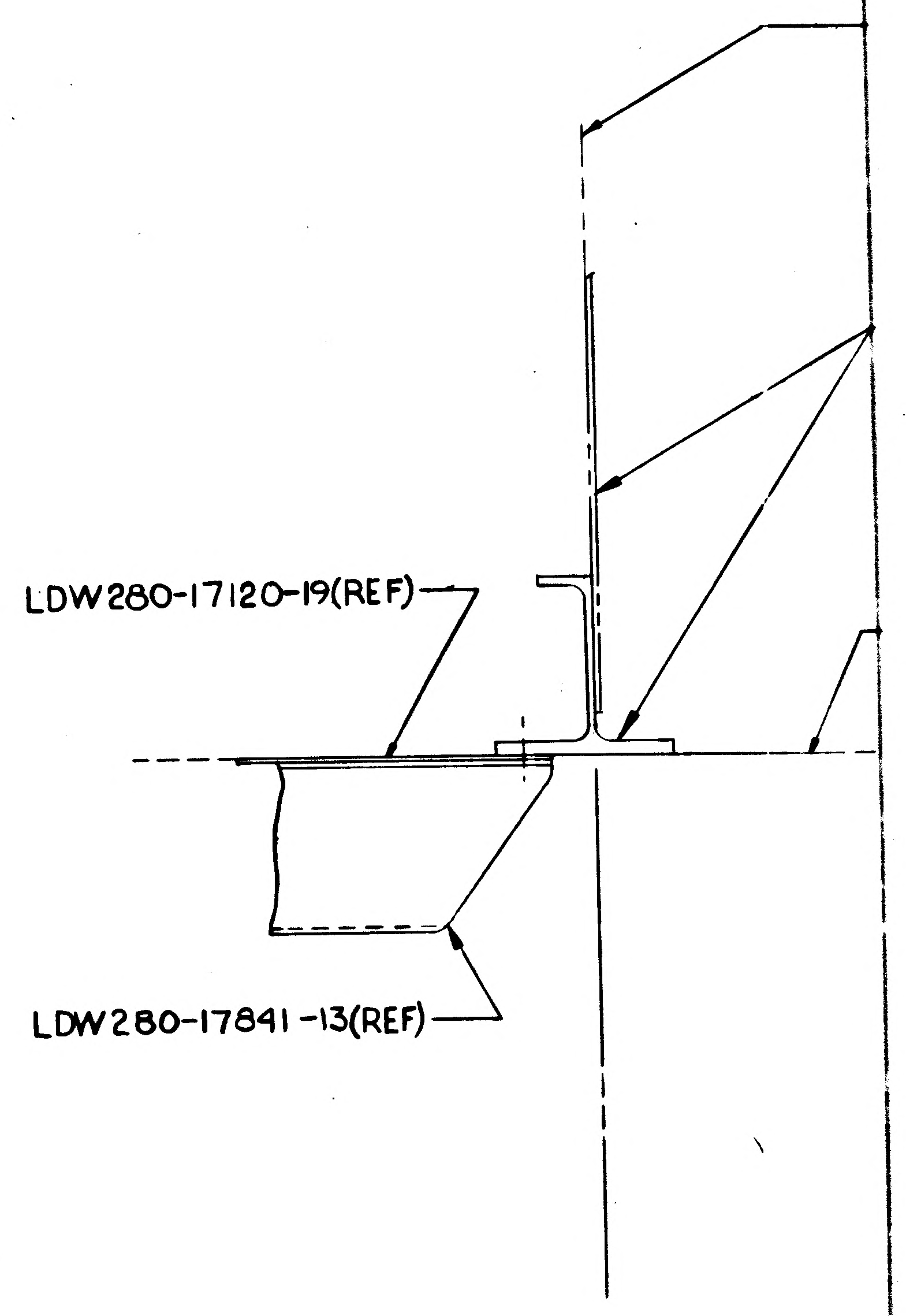
LDW280-17120-19(REF)
LDW280-17841-13(REF)

SECTION J-J
(ZONE 3C SH 3)

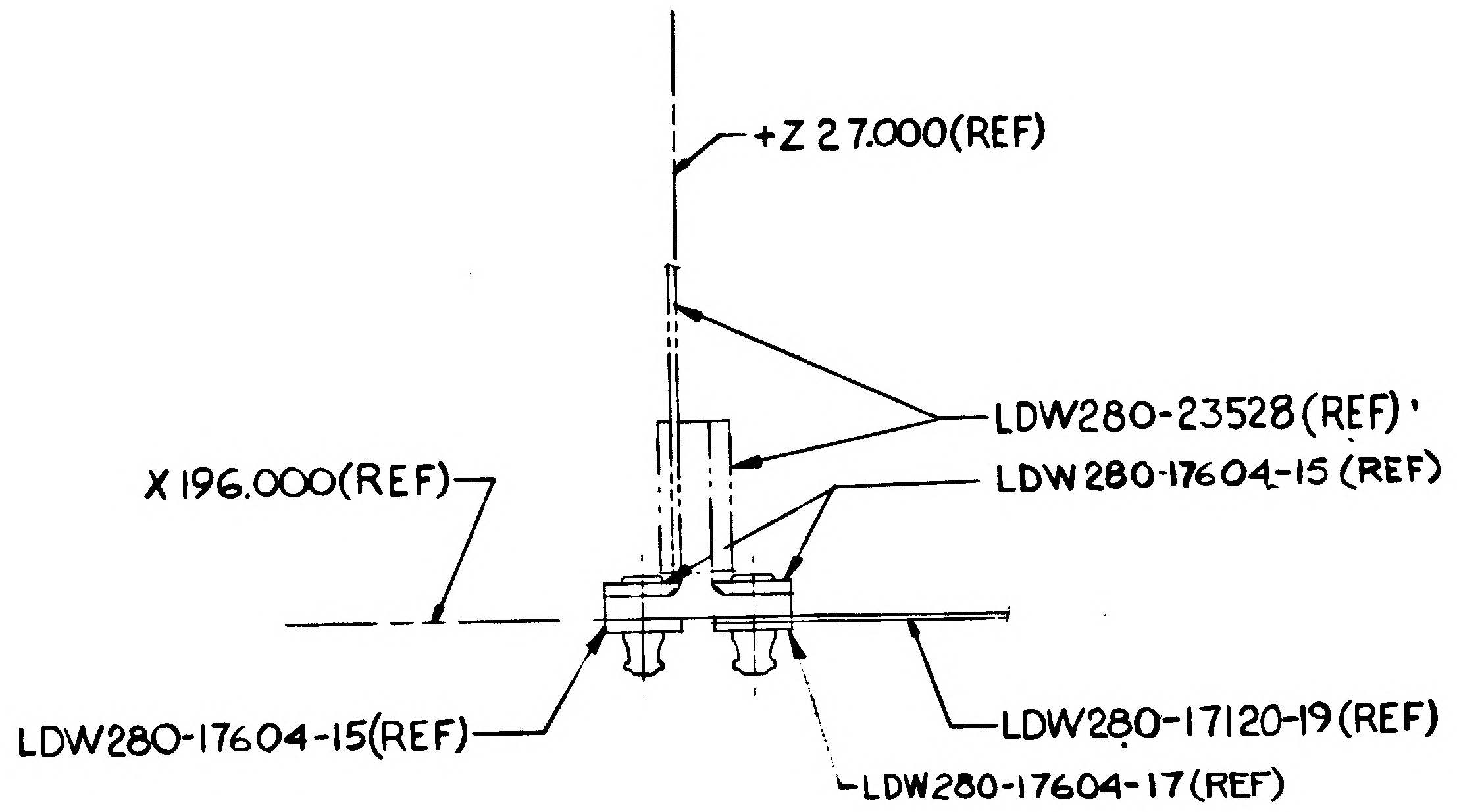
+Z 27.000(REF)
LDW280-23528 (REF)
X196.000(REF)
LDW280-17604-15 (REF)
LDW280-17604-15(REF)
LDW280-17120-19 (REF)
LDW280-17604-17 (REF)

SECTION F-F
(ZONE 8A SH 3)

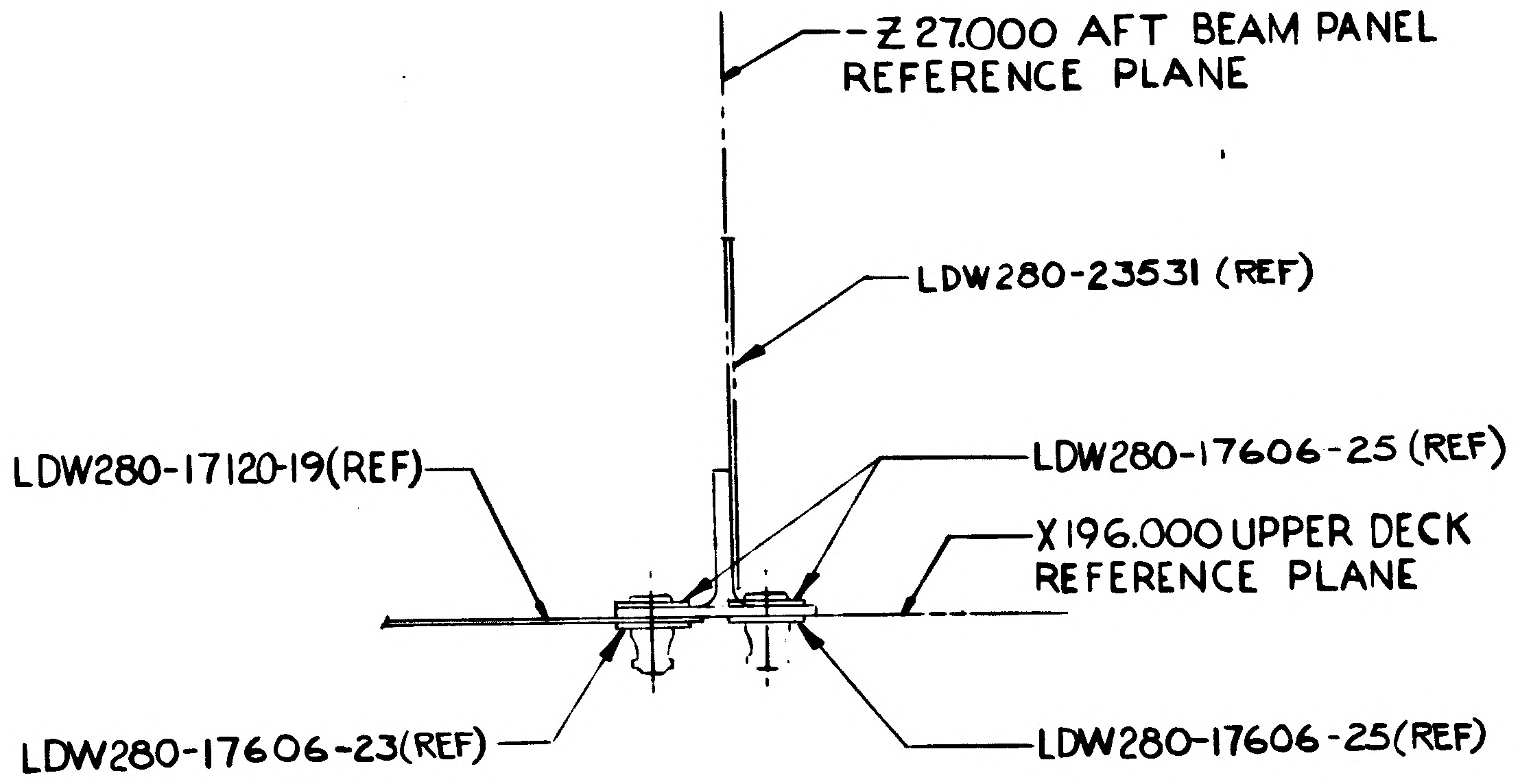
-Z 27.000 AFT BEAM PANEL REFERENCE PLANE
LDW280-23531 (REF)
LDW280-17120-19(REF)
LDW280-17606-25 (REF)
X196.000 UPPER DECK REFERENCE PLANE
LDW280-17606-23(REF)
LDW280-17606-25(REF)

SECTION A-A
(ZONE 3F SH 4)

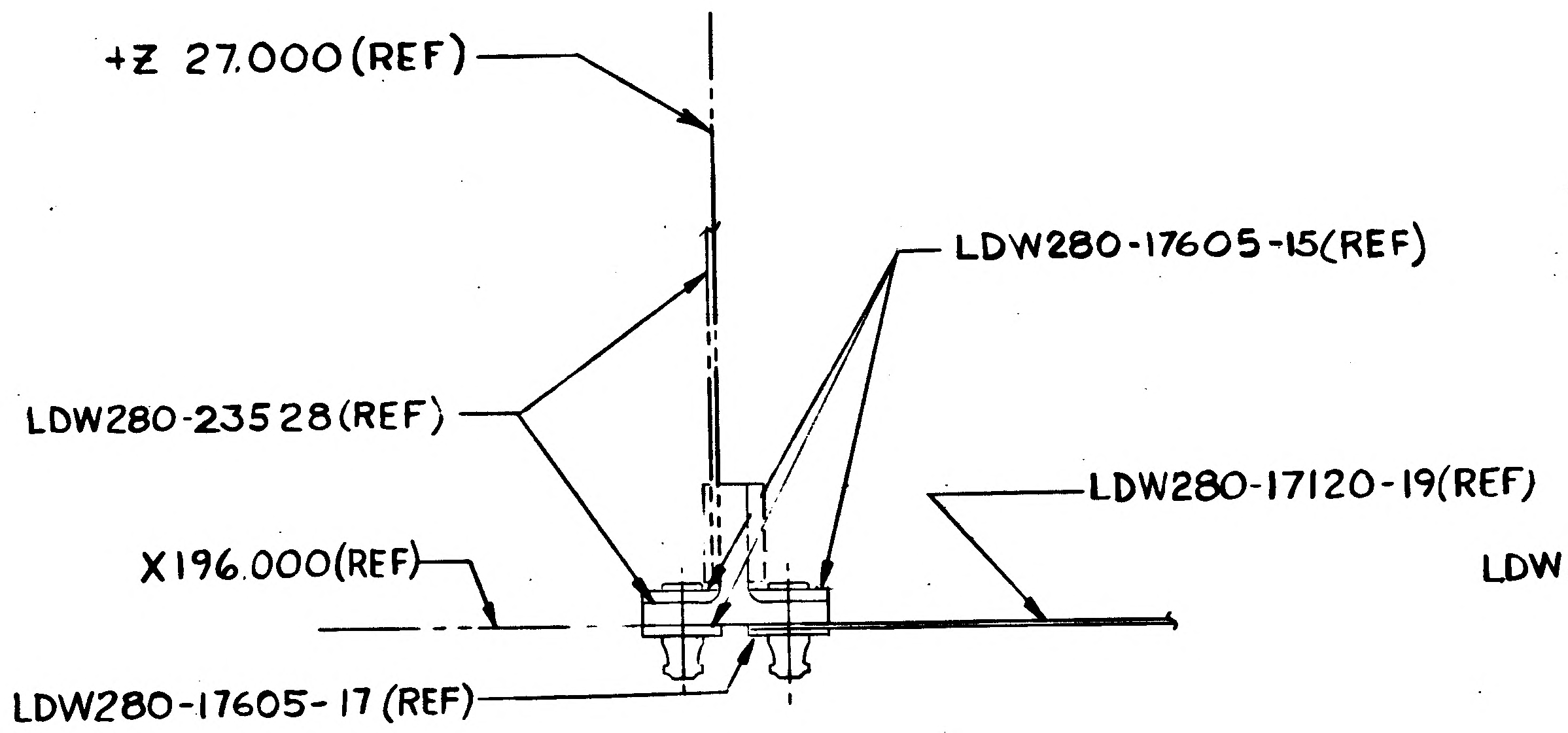
+Z 27.000(REF)
LDW280-17605-15(REF)
LDW280-23528 (REF)
LDW280-17120-19(REF)
X196.000(REF)
LDW280-17605-17 (REF)

SECTION B-B
(ZONE 9F SH 4)

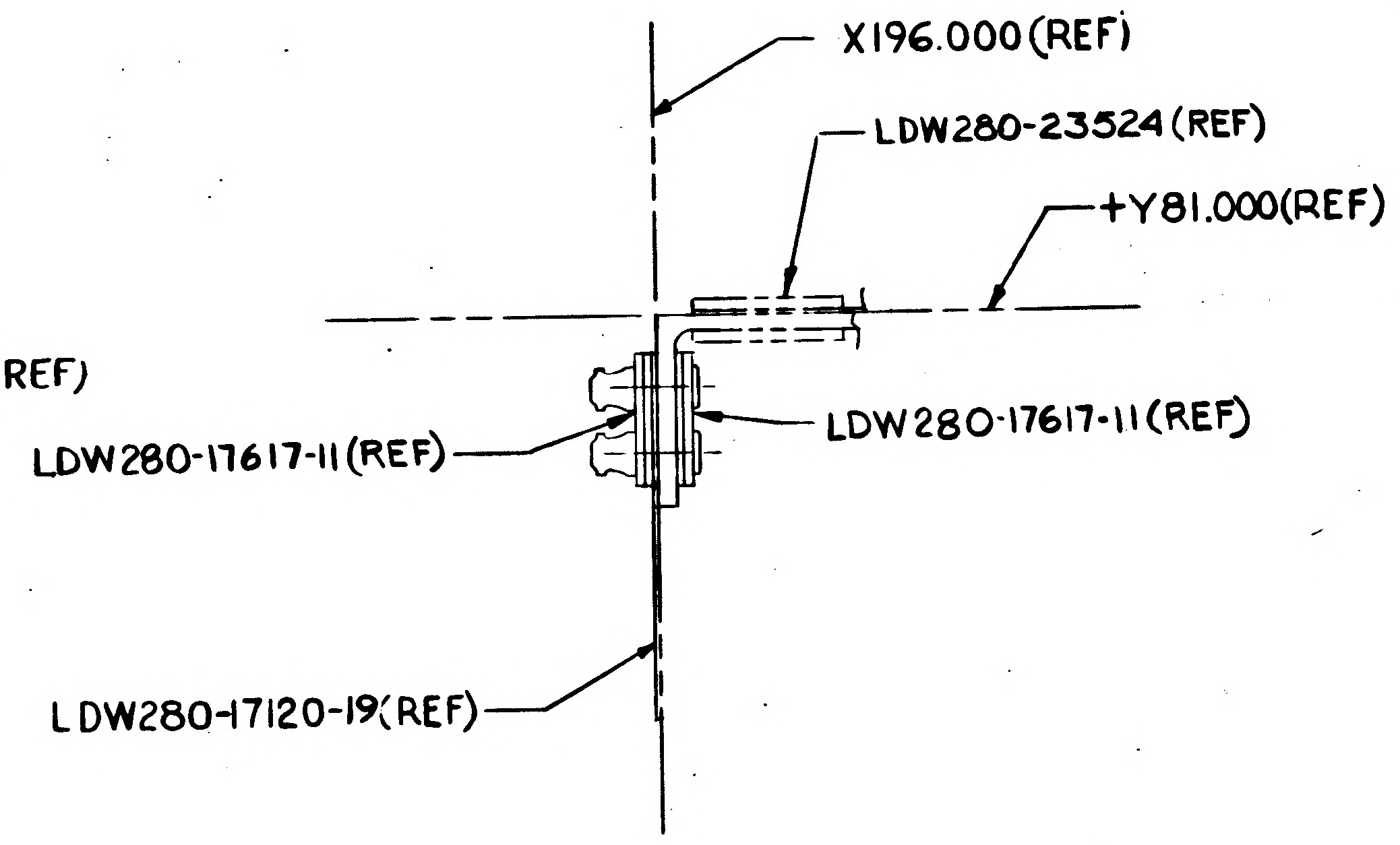
X196.000 (REF)
LDW280-23524 (REF)
+Y81.000(REF)
LDW280-17617-11(REF)
LDW280-17617-11 (REF)
LDW280-17120-19(REF)

SECTION C-C
(ZONE 4F SH 4)

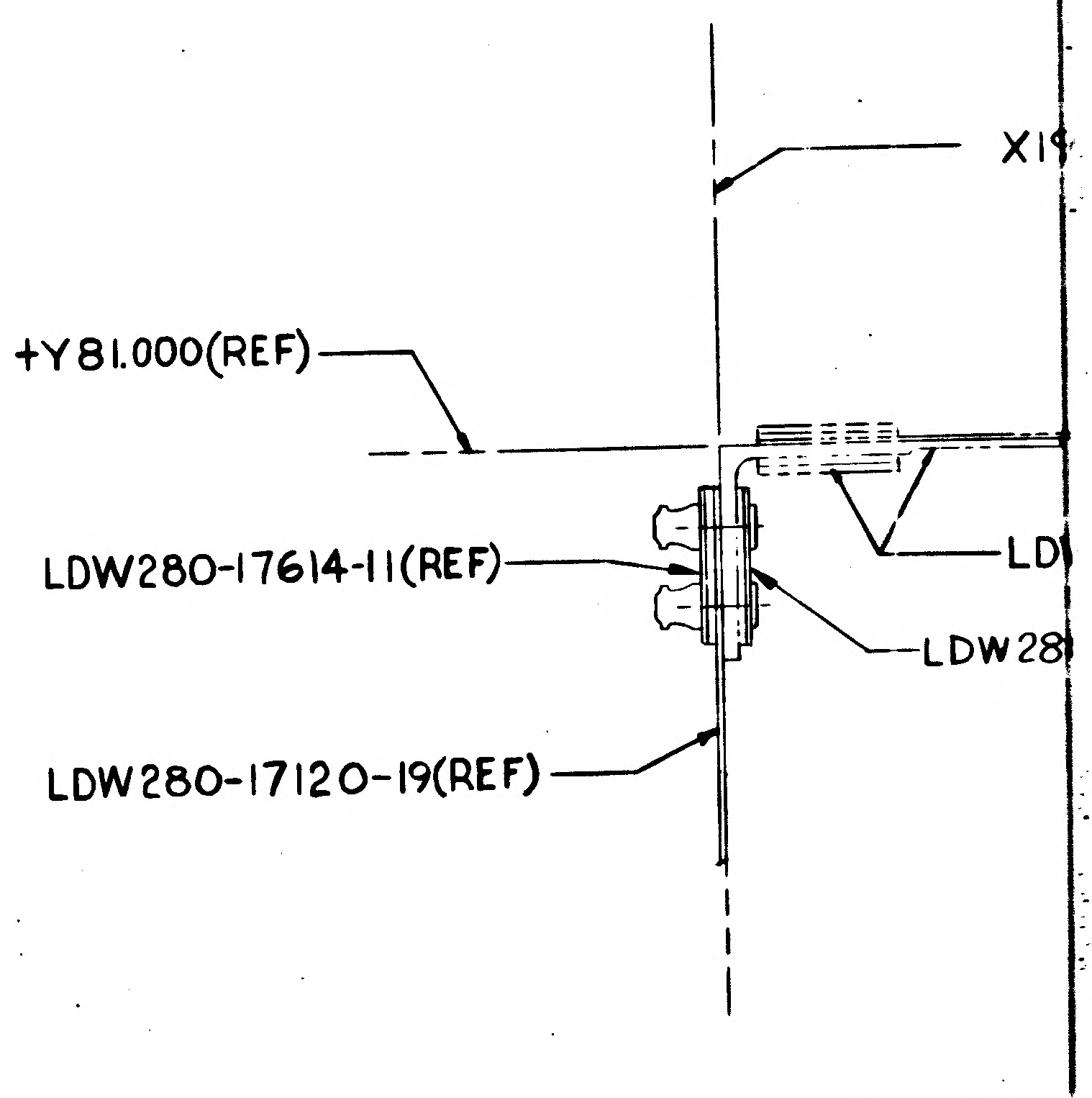
X19
+Y81.000(REF)
LDW280-17614-11(REF)
LDW280-17120-19(REF)

SECTION D-D
(ZONE 8F SH 4)

01703 NAS 9-1100

3/3

CODE IDENT NO 26512
LDW280-52520 SH 5

LDW280-52520 B

MODEL OR END ITEM	NEXT ASSY	MODULE OR SER NO.	REQD PER MODULE OR END ITEM
PART NO.		GAEC SCH NO.	

MODEL OR END ITEM	NEXT ASSY	MODULE OR SER NO.	REQD PER MODULE OR END ITEM
LM	LDW280-54510	LTA-3 D/R (46)	1
LM	LDW280-54510	LM-15 (45)	1
		LM-14 (44)	1
		LM-13 (43)	1
		LM-12 (42)	1
		LM-11 (41)	1
		LM-10 (40)	1
		LM-9 (39)	1
		LM-8 (38)	1
		LM-7 (37)	1
		LM-6 (36)	1
		LM-5 (35)	1
LM	LDW280-54510	LM-4 (34)	1
PART NO. LDW280-52520-5		GAEC SCH NO. 513	

MODEL OR END ITEM	NEXT ASSY	MODULE OR SER NO.	REQD PER MODULE OR END ITEM
LM	LDW280-53510	LM-3 (33)	1
LM	LDW280-52510	LM-2 (32	1
PART NO. LDW280-52520-1		GAEC SCH NO. 513	

2

SH REV STATUS: FOR DESCRIPTION OF REV SEE SUBQ SH

SHEET	1.00	1.10	2.00	2.01	2.02		3.00	4.00	5.00
REV	B	B	B	B	B		B	B	B
SHEET									
REV									
SHEET									
REV									

LAST SECT LTR USED R
LAST DASH NO. USED -7
GRUMMAN REF INFO B
PRIM NO. 207
K(CO1) N-P-5B-5/2/7
EMF

UNLESS OTHERWISE SPECIFIED DIMENSIONS ARE IN INCHES.
TOLERANCE UNLESS SPECIFIED FRACTIONS - DECIMALS - ANGLES
±1/16 ±.020 ±1/2°
ORIG DWG AUTH
DETAIL SPEC REQUIREMENT
CLASS II ENGRG CHANGE
CLASS I ENGRG CHANGE
LCD-1242

CONTRACT NO. NAS 9-1100
LINE ITEM I
DOCUMENTATION TYPE II
DRAWN BY R. NISBET 11-21-66
RELIABILITY
LAYOUT BY AMBROSIO
CHECKED BY H RODALEWICZ 11-28-66
GR LEADER
VEH. DES. NT 12/8
STRUCTURES EB 12/8
STRUCTURES
WEIGHTS
PROJ ENGR R M Carbee 12-8-66
REL GROUP J Tagliavia 12/14/66

GRUMMAN AIRCRAFT ENGRG CORP
BETHPAGE, L. I., NEW YORK

DECK INSTALLATION
DESCENT STAGE-R.H.-UPPER DECK

SIZE B
CODE IDENT NO. 26512
LDW280-52520 B
SCALE NONE
SHEET 1.00 OF 8

ENG 77.1 12-65

01

NAS 9-1100

REVISIONS FOR CONTINUATION OF REVISIONS SEE SHEET

CHANGE LTR	ITEM NO.	SHEET NO.	ZONE	GRUMMAN INFO ONLY	DET SPEC	CLASS I	CLASS II	ENGRG ORDER	DESCRIPTION	EFFECTIVITY	DISPOSITION OF EXISTING PARTS REWORK	DISPOSITION OF EXISTING PARTS SCRAP	CHANGED BY AND DATE	ENGRG APPD	~~GOVT~~ APPD
A	1	1.00, 1.10, 2.00, 2.01, 2.02, 3.00, 4.00 & 5.00						E.O.A1	INITIAL DRAWING RELEASE PARTS MADE PER E.O.	LM-2 THRU LM-6	✓		R. NISBET	KMS 12-8-66	12-14-66
	2	1.10, 2.00, 3.00 & 4.00	6B				✓	E.O.A2	IN FLD & B/M ON -3 LDW280-17120-21 WAS LDW280-17120-19						
	3	1.00 & 1.10						LE0280-326	FOR -1 ADDED LM-7 THRU LM-15 EFF.	LM-7 THRU -15	NOT	REQD			
	4	1.00 & 1.10							N/A LDW280-55510 FOR LM-5 & LDW280-56510 FOR LM-6 THRU LM-15 SHOULD BE LDW280-54510 FOR LM-5 THRU LM-15	LM-5 THRU -15	NOT	REQD			
B	1	4.00	4F					EOB1	FOR-1 INSTL, IN FLD ADDED RIVET SPOTFACE ON LDW 280-23524	LM-2 THRU LM-15	✓		L. BRIDA 4-25-67		
	2	2.00 3.00	2B					EOB2	ADDED SEE NOTE 8 TO PROCESS SYM BLOCK & NOTE #8.						
	3	1.00, 2.00, 2.01, 2.02, 3.00, 4.00, 5.00	6A 6D 6E					EOB3	IN FLD/DWG, B/M & MOD/BLK ADDED -5 INSTL. IN MOD/BLK FOR -1 INSTL, DELETED LM-4(34) THRU LM-15(45) EFFECTIVITY	LM-4(34) THRU LM-15(45)		-1			
	4	4.00 5.00	6E 17B					EOB4	REF. EOB3 IN FLD & B/M, FOR -7 ASSY LDW280-17841-23 WAS LDW 280-17841-19						
	5	2.00 4.00	4F					EOB5	FOR-3, IN FLD & B/M LDW280-17330-32 WAS LDW 280-17330-40	LM-2 THRU LM-15					
	6							EOB6	REF EO B5 "FOR-3 & -7 ASSY'S" WAS "FOR -3 ASSY"						
	7	2.01, 4.00, 5.00	3D 11B					EOB7	ON-1, -3 & -5 ADDED LDW280-18111-15 & MS20470AD4(3)						
	8							EOB8	REF EOB7 ON-1, -3, -5 & -7 WAS ON-1, -3, & -5						
	9						✓	EOB9	REF EOB7 & B8 ON-3 & -7 WAS ON-1, -3, -5 & -7						
	10	1.00					✓	LE0280-539 LCD -1242	IN MODEL BLOCK FOR -5 ADDED LTA-3DR EFF	LTA-3D/R(46)	NOT	REQD	ES		

CHG APPROVED LTR	~~GROUP LDR~~	VEH DES.INT	STRUCTURES	STRUCTURES	WEIGHTS	RELIABILITY
A			EB12			
B						

GRUMMAN AIRCRAFT ENGRG CORP., BETHPAGE, L. I., NEW YORK

SIZE	CODE IDENT NO.		
B	26512	LDW280-52520	B

SCALE NONE SHEET 1.10

ENG 77.16 3-66

01

NAS 9-1100

QTY PER ASSEMBLY																		
				-7	-5	-3	-1	CODE IDENT	PART NO.	I&T	NOMENCLATURE OR DESCRIPTION	MATERIAL	GOVT SPEC	COML SPEC	STOCK SIZE	PROCESS SYM	FINISH NO.	ZONE
				1		1			LDW280-17437-15	E	STIFFENER	SEE DWG						5A
				1		1			LDW280-17437-13									5A
				1		1			LDW280-17437-11									4A
				1		1			LDW280-17330-32									4F
				1		1			-38									8A
				1		1			-36									8F
				1		1			LDW280-17330-34									3A
				1		1			LDW280-17310-19									7F
				1		1			-17									6F
				1		1			-15									5F
				1		1			-14									7F
				1		1			-13									5F
				1		1			LDW280-17310-11									4F
				1		1			LDW280-17233-37									6A
				1		1			-35									7A
				1		1			-34									4A
				1		1			-33									7A
				1		1			-31									8A
				1		1			LDW280-17233-30		STIFFENER							6A
				1		1			LDW280-17120-21		WEB	SEE DWG						6B
					1				LDW280-52520-7		ASSEMBLY					NONE	NONE	
							1		LDW280-52520-3		ASSEMBLY					NONE	NONE	
									LDW280-52520-5		INSTALLATION					SEE NOTE 8	NONE	
									LDW280-52520-1	E	INSTALLATION					SEE NOTE 8	NONE	

SYM OR NO.	PROCESS OR FINISH	GRUMMAN SPEC OR MILITARY SPEC	SYM OR NO.	PROCESS OR FINISH	GRUMMAN SPEC OR MILITARY SPEC	SYM OR NO.	PROCESS OR FINISH	GRUMMAN SPEC OR MILITARY SPEC
						88	ANODIZE	LSP14-9030

I & T: IDENTIFICATION AND TRACEABILITY IN ACCORDANCE WITH :
NONE

GRUMMAN AIRCRAFT ENGRG CORP, BETHPAGE, L. I., NEW YORK

SIZE	CODE IDENT NO.		
B	26512	LDW280-52520	B
SCALE NONE			SHEET 2.00

ENG 77.2 7-65

01

NAS 9-1100

-7	-5	-3	-1	CODE IDENT	PART NO.	I&T	NOMENCLATURE OR DESCRIPTION	MATERIAL	GOVT SPEC	COML SPEC	STOCK SIZE	PROCESS SYM	FINISH NO.	ZONE
1		1			LDW280-18111-15	E	CLIP	SEE DWG						4A
1		1			LDW280-17981-15	E	CLIP	SEE DWG						11A
1		1			-17981-13		TEE							11B
1		1			-17981-11		ZEE							11B
1		1			-17850-17		DOUBLER							6C
1					-17841-23		ZEE							6E
1		1			-17841-21		ZEE							7B
1		1			-17841-19									7D
		1			-17841-15									6F
1		1			-17841-13		ZEE							6C
	1		1		-17749-17		ANGLE							3D
	2		2		-17617-11		SPLICE PLATE							4F
	2		2		-17614-11									8F
	1		1		-17607-17									3A
	3		3		-17607-15									3A
	3		3		-17606-25									3F
	1		1		-17606-23									3F
	1		1		-17605-17									9F
	3		3		-17605-15									9F
	1		1		-17604-17									8A
	3		3		-17604-15		SPLICE PLATE							9A
1		1			-17440-15		STIFFNER							7F
1		1			-17440-13		STIFFNER							8F
1		1			LDW280-17440-11	E	STIFFENER	SEE DWG						5F

QTY PER ASSEMBLY

SYM OR NO.	PROCESS OR FINISH	GRUMMAN SPEC OR MILITARY SPEC	SYM OR NO.	PROCESS OR FINISH	GRUMMAN SPEC OR MILITARY SPEC	SYM OR NO.	PROCESS OR FINISH	GRUMMAN SPEC OR MILITARY SPEC

I & T: IDENTIFICATION AND TRACEABILITY IN ACCORDANCE WITH :

GRUMMAN AIRCRAFT ENGRG CORP, BETHPAGE, L. I., NEW YORK

SIZE	CODE IDENT NO.		
B	26512	LDW280-52520	B

SCALE NONE

SHEET 2.01

ENG 77.2 7-65

01

NAS 9-1100

			QTY PER ASSEMBLY				CODE IDENT	PART NO.	I&T	NOMENCLATURE OR DESCRIPTION	MATERIAL	GOVT SPEC	COML SPEC	STOCK SIZE	PROCESS SYM	FINISH NO.	ZONE
			-7	-5	-3	-1											
								SEE NOTE #5	E	SHIM							
								MS20470DD5	E	RIVET	STD PART						
								MS20470DD4	E	RIVET	STD PART						
				40		40		GN512H-3		COLLAR	GRUMMAN STD						
				4		4		GB511K-3-8		PIN							
				8		8		GB511K-3-7									
				12		12		GB511K-3-6									
				12		12		GB511K-3-5									
				4		4		GB511K-3-4									
				8		8		GB511K-08-4		PIN							
				8		8		GN512H-08	E	COLLAR	GRUMMAN STD						

SYM OR NO.	PROCESS OR FINISH	GRUMMAN SPEC OR MILITARY SPEC	SYM OR NO.	PROCESS OR FINISH	GRUMMAN SPEC OR MILITARY SPEC	SYM OR NO.	PROCESS OR FINISH	GRUMMAN SPEC OR MILITARY SPEC

I & T: IDENTIFICATION AND TRACEABILITY IN ACCORDANCE WITH :

GRUMMAN AIRCRAFT ENGRG CORP, BETHPAGE, L. I., NEW YORK

SIZE	CODE IDENT NO.		
B	26512	LDW280-52520	B
SCALE NONE			SHEET 2.02

ENG 77.2 7-65

01

NAS 9-1100

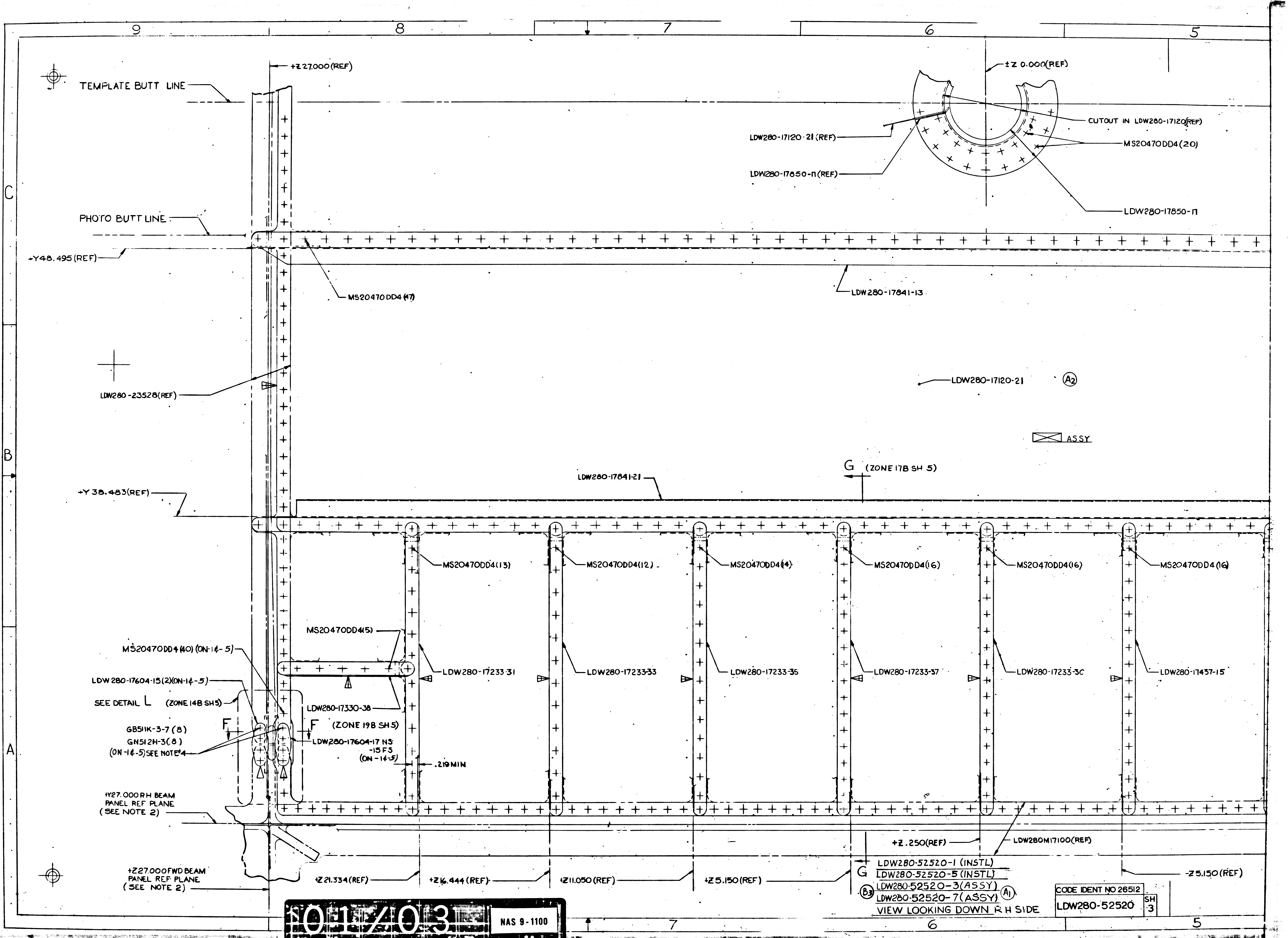
9
8
7
6
5
C
B
A
TEMPLATE BUTT LINE
PHOTO BUTT LINE
+Y48.495 (REF)
+Z27.000 (REF)
±Z 0.000 (REF)
CUTOUT IN LDW280-17120 (REF)
LDW280-17120-21 (REF)
MS20470DD4 (20)
LDW280-17850-11 (REF)
LDW280-17850-11
MS20470DD4 (47)
LDW280-17841-13
LDW280-23528 (REF)
LDW280-17120-21
(A2)
ASSY
G (ZONE 17B SH 5)
LDW280-17841-21
+Y 38.483 (REF)
MS20470DD4 (13)
MS20470DD4 (12)
MS20470DD4 (14)
MS20470DD4 (16)
MS20470DD4 (16)
MS20470DD4 (16)
MS20470DD4 (5)
MS20470DD4 (40) (ON -1 & -5)
LDW 280-17604-15 (2) (ON -1 & -5)
SEE DETAIL L (ZONE 14B SH 5)
LDW280-17233-31
LDW280-17233-33
LDW280-17233-35
LDW280-17233-37
LDW280-17233-3C
LDW280-17437-15
LDW280-17330-38
F
F (ZONE 19B SH 5)
GB511K-3-7 (8)
GN512H-3 (8)
(ON -1 & -5) SEE NOTE 4
LDW280-17604-17 NS
-15 FS
(ON -1 & -5)
.219 MIN
+Y27.000 RH BEAM
PANEL REF PLANE
(SEE NOTE 2)
+Z.250 (REF)
LDW280M17100 (REF)
+Z27.000 FWD BEAM
PANEL REF PLANE
(SEE NOTE 2)
+Z21.334 (REF)
+Z16.444 (REF)
+Z11.050 (REF)
+Z5.150 (REF)
-Z5.150 (REF)
G

LDW280-52520-1 (INSTL)
LDW280-52520-5 (INSTL)
(B3) LDW280-52520-3 (ASSY)
LDW280-52520-7 (ASSY) (A1)
VIEW LOOKING DOWN RH SIDE

CODE IDENT NO 26512	SH
LDW280-52520	3

01/03

NAS 9-1100

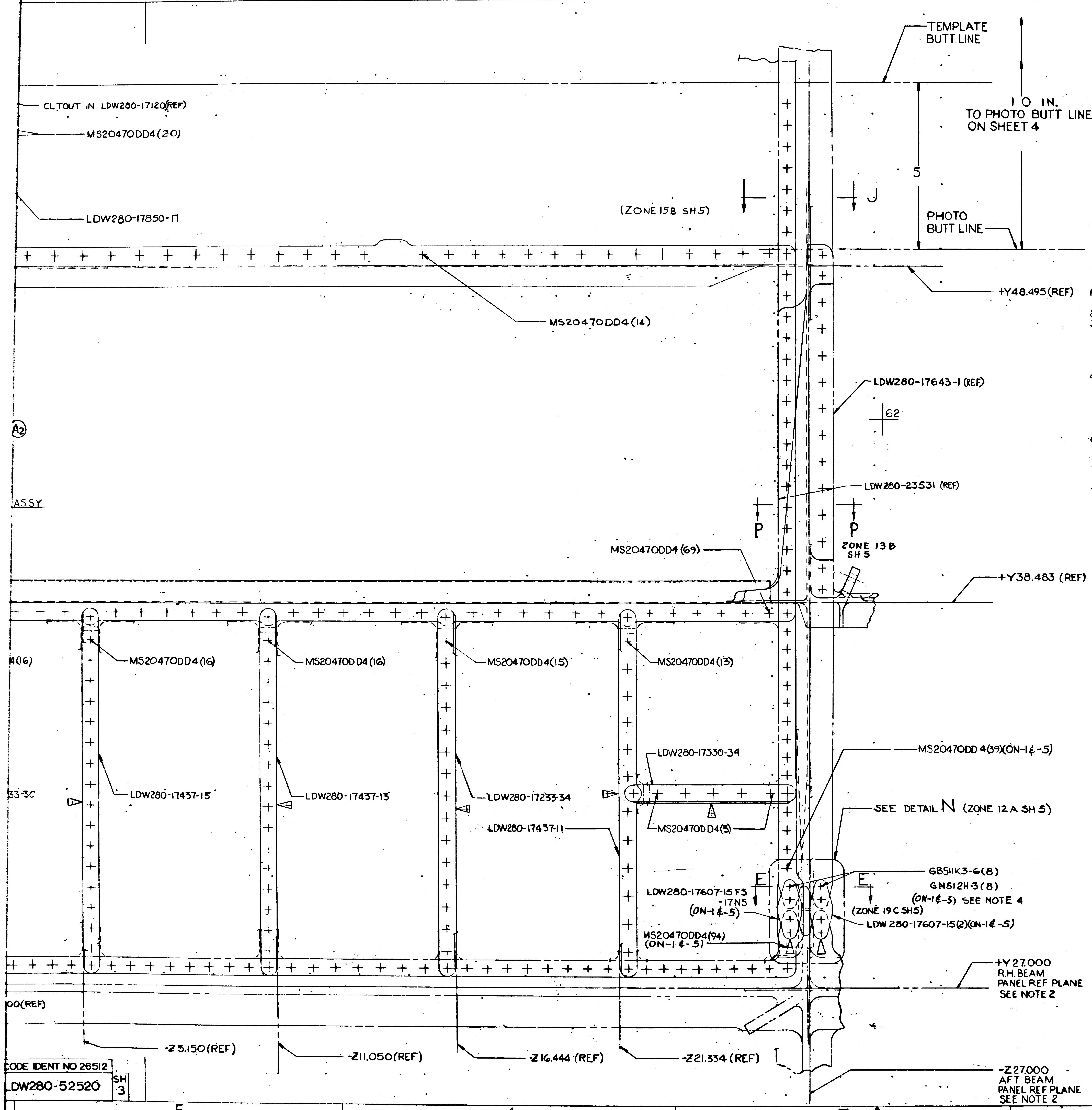
5
4
3
2
1
TEMPLATE BUTT LINE
1 0 IN. TO PHOTO BUTT LINE ON SHEET 4
5
PHOTO BUTT LINE
CL TOUT IN LDW280-17120(REF)
MS20470DD4(20)
LDW280-17850-11
(ZONE 15B SH5)
J
MS20470DD4(14)
+Y48.495(REF)
LDW280-17643-1 (REF)
62
A2
ASSY
LDW280-23531 (REF)
P
P
ZONE 13 B SH 5
MS20470DD4 (69)
+Y38.483 (REF)
4(16)
MS20470DD4(16)
MS20470DD4(16)
MS20470DD4(15)
MS20470DD4(13)
MS20470DD4(39)(ON-1¢-5)
LDW280-17330-34
33-3C
LDW280-17437-15
LDW280-17437-13
LDW280-17233-34
MS20470DD4(5)
SEE DETAIL N (ZONE 12 A SH 5)
LDW280-17437-11
E
E
GB511K3-6(8)
GN512H-3(8)
(ON-1¢-5) SEE NOTE 4
LDW280-17607-15 FS -17NS (ON-1¢-5)
(ZONE 19C SH5)
LDW 280-17607-15(2)(ON-1¢-5)
MS20470DD4(94) (ON-1¢-5)
+Y 27.000 R.H. BEAM PANEL REF PLANE SEE NOTE 2
00(REF)
-Z5.150(REF)
-Z11.050(REF)
-Z16.444 (REF)
-Z21.334 (REF)
-Z27.000 AFT BEAM PANEL REF PLANE SEE NOTE 2

CODE IDENT NO 26512
LDW280-52520 SH 3

NOTES:
1. NO TOOLING HOLES PERMITTED IN PARTS.
2. FOR BASIC JIG DATA SEE LDW280-23511.
3. A) TOLERANCE ON LINES MARKED ◁ TO BE ± 1/64.
   B) TOLERANCE ON LINES MARKED ◁ TO BE ± 1/32.
   C) TOLERANCE ON LOFTED LOCATION OF FASTENERS THRU LDW280-17120-21 TO BE ± 1/32, OTHERS TO BE LOCATED FROM PILOT HOLES IN DETAIL PARTS.
4. INSTALL FASTENERS PER LSP14 15306
5. SHIM AS REQD USING AL ALLOY QQ-A-250/4 2024-T3 FINISH #88.
6. FASTENER MANUFACTURED HEAD (OTHER THAN CSK ATTACHMENTS) TO BE ON WEB SIDE UNLESS OTHERWISE SPECIFIED.
7 PERMISSIBLE OIL CAN DEPTH OF WEBS BETWEEN STIFFENERS IS ±.100.
8. ADD PATCHES PER LPC 280-17.

02/03 NAS 9-1100

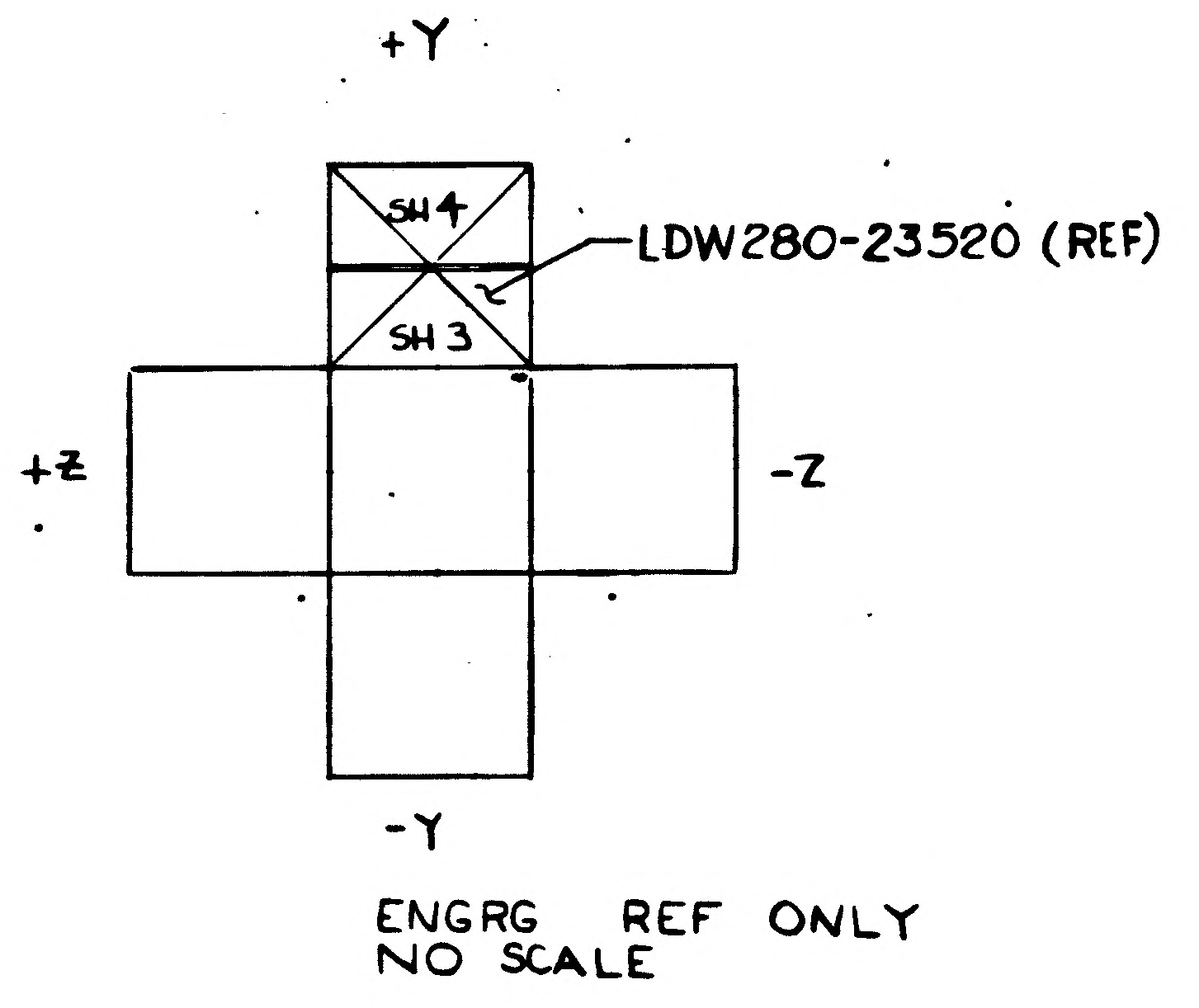
+Y
SH 4
SH 3
LDW280-23520 (REF)
+Z
-Z
-Y

ENGRG REF ONLY
NO SCALE

CODE IDENT NO 26512
LDW280-52520 SH 3

LM
GRUMMAN AIRCRAFT ENGRG CORP.
J 26512 LDW280
SCALE FULL

FOR PHOTO REP

THIS IS AN ORIGINAL DWG 3 FRAME

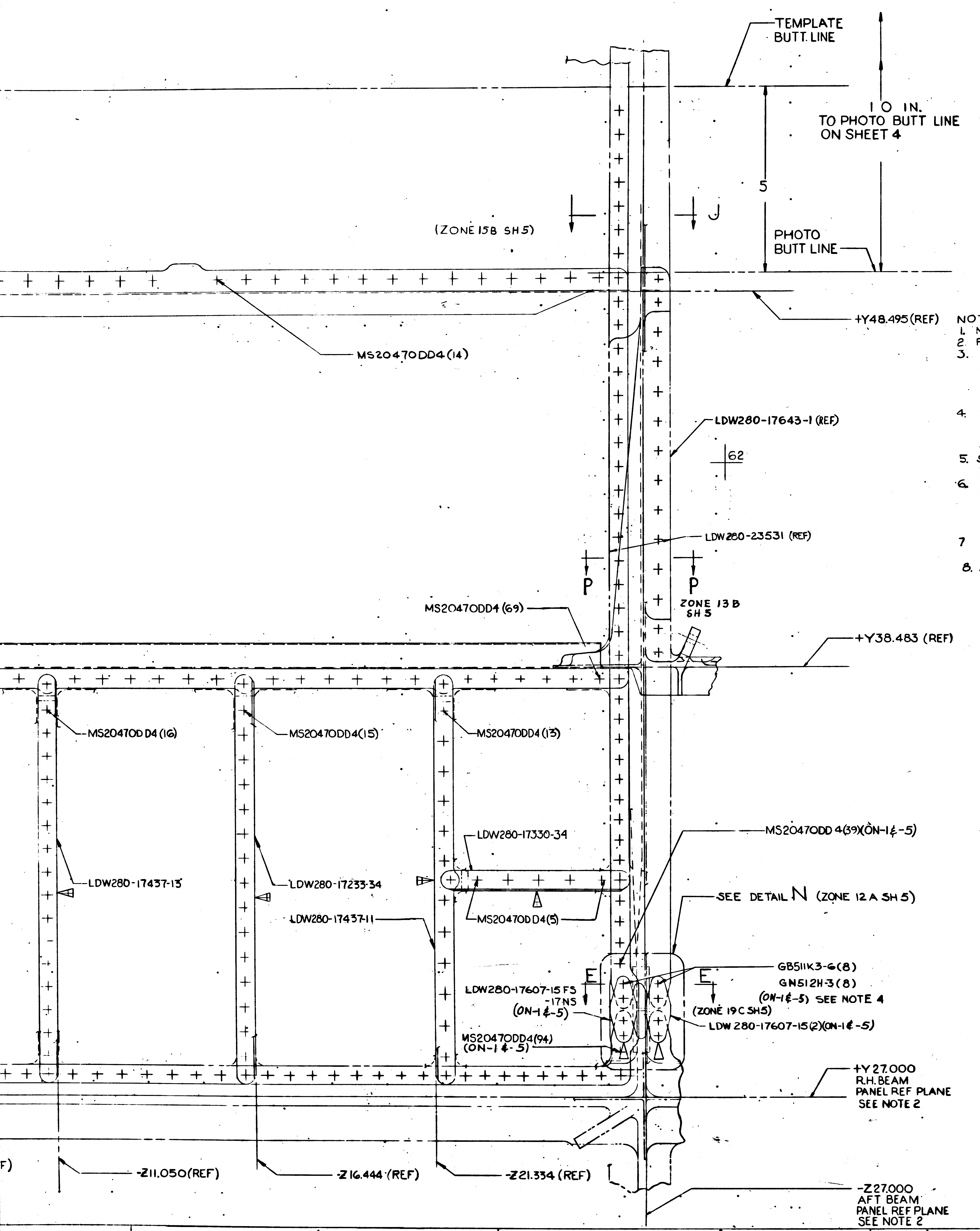
4
3
2
1
TEMPLATE BUTT. LINE
1 0 IN. TO PHOTO BUTT LINE ON SHEET 4
5
J
(ZONE 15B SH5)
PHOTO BUTT LINE
+Y48.495 (REF)
MS20470DD4(14)
LDW280-17643-1 (REF)
62
LDW280-23531 (REF)
P
P
ZONE 13 B SH 5
MS20470DD4 (69)
+Y38.483 (REF)
MS20470DD4 (16)
MS20470DD4(15)
MS20470DD4(13)
LDW280-17437-13
LDW280-17233-34
LDW280-17437-11
LDW280-17330-34
MS20470DD4(5)
MS20470DD 4(39)(ON-1¢-5)
SEE DETAIL N (ZONE 12 A SH 5)
E
E
GB511K3-6(8)
GN512H-3(8)
(ON-1¢-5) SEE NOTE 4
LDW280-17607-15 FS -17NS (ON-1¢-5)
(ZONE 19C SH5)
LDW 280-17607-15(2)(ON-1¢-5)
MS20470DD4(94) (ON-1¢-5)
+Y27.000 R.H. BEAM PANEL REF PLANE SEE NOTE 2
-Z11.050(REF)
-Z16.444 (REF)
-Z21.334 (REF)
-Z27.000 AFT BEAM PANEL REF PLANE SEE NOTE 2
80
30

NOTES:
1. NO TOOLING HOLES PERMITTED IN PARTS.
2. FOR BASIC JIG DATA SEE LDW280-23511.
3. A) TOLERANCE ON LINES MARKED ◁ TO BE ± 1/64.
   B) TOLERANCE ON LINES MARKED ◁ TO BE ± 1/32.
   C) TOLERANCE ON LOFTED LOCATION OF FASTENERS THRU LDW280-17120-21 TO BE ± 1/32, OTHERS TO BE LOCATED FROM PILOT HOLES IN DETAIL PARTS.
4. INSTALL FASTENERS PER LSP14 15306
5. SHIM AS REQD USING AL ALLOY QQ-A-250/4 2024-T3 FINISH #88.
6. FASTENER MANUFACTURED HEAD (OTHER THAN CSK ATTACHMENTS) TO BE ON WEB SIDE UNLESS OTHERWISE SPECIFIED.
7 PERMISSIBLE OIL CAN DEPTH OF WEBS BETWEEN STIFFENERS IS ±.100.
8. ADD PATCHES PER LPC 280-17.

03/03 NAS 9-1100

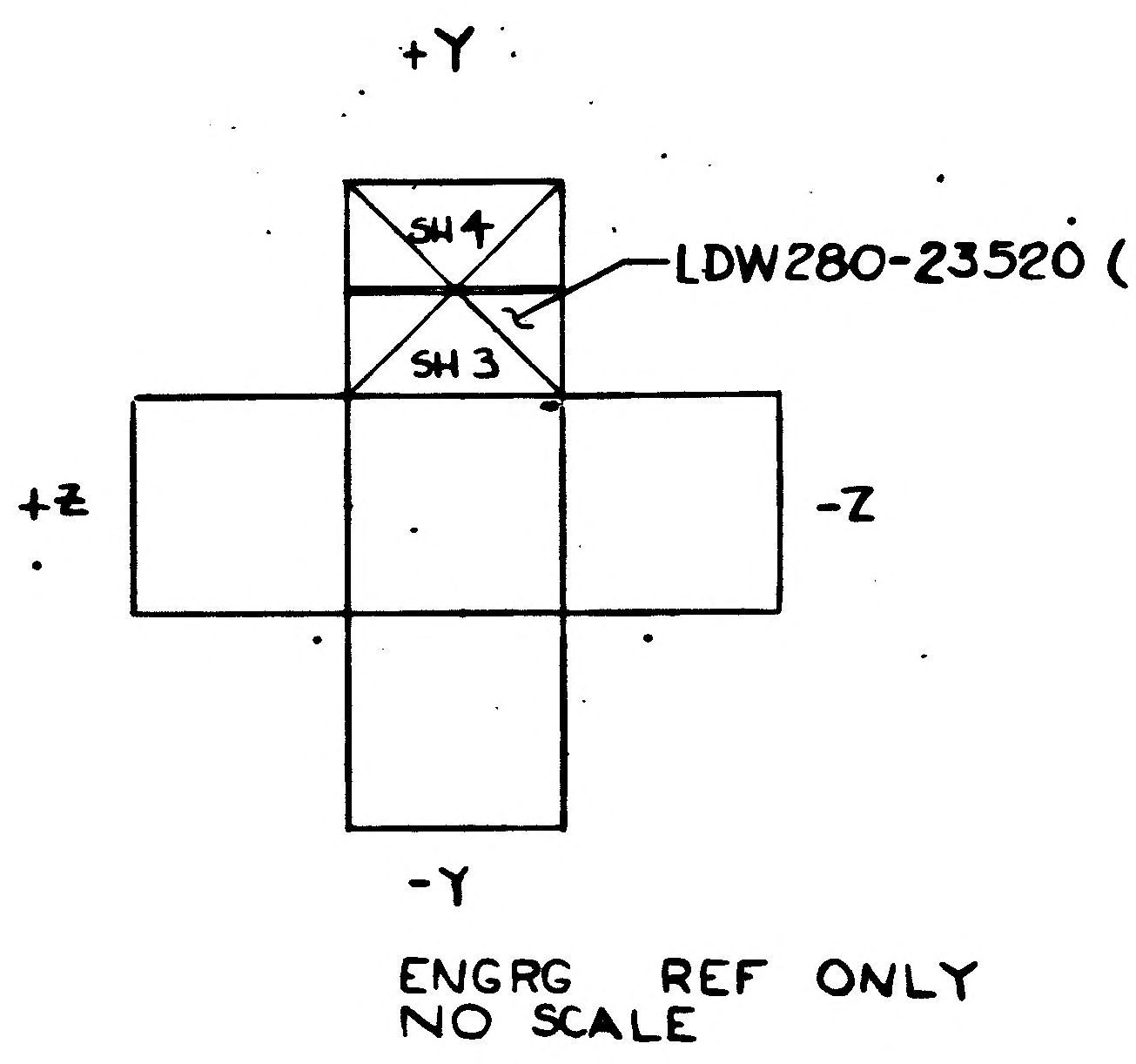
+Y
SH 4
SH 3
LDW280-23520 (REF)
+Z
-Z
-Y

ENGRG REF ONLY
NO SCALE

MANUFACTURING OPERATIONS UNLESS OTHERWISE SPECIFIED NOTES CHECKED ✓ APPLY TO THIS DWG.	
RUBBER STAMP PART NUMBER AND ALL OTHER MARKINGS IN REGION MARKED ☒ USE BOTH SIDES IF NECESSARY.	✓
FILLET AND INSIDE CORNER RADII TOLERANCES .016R TO .062R ± .010 .063R TO .250R ± .015 OVER .250R ± .030	
DEPTH SHOWN FOR TAPPED HOLES IS FULL THDS. 2-3 IMP. THDS. BEYOND PERMISSIBLE	
EXTERNAL THREAD LENGTH SHOWN INCLUDES 2 IMPERFECT THREADS MAX.	
DO NOT CADMIUM PLATE & PAINT HOLES OR SURFACES MARKED WITH DOUBLE ASTERISK.	
MISMATCH STEP OF ± .005 PERMISSIBLE DUE TO CHANGE OF CUTTERS AT INSIDE INTERSECTING SURFACES.	
DIAMETERS MARKED MUST BE CONCENTRIC WITHIN FULL INDICATOR READING.	
HOLES MUST BE KEPT FREE OF CHROME PLATING SOLUTION.	
ALL DIMENSIONS SHOWN TO BE MET AFTER CADMIUM PLATING. THICKNESS OF PLATE .0003 MIN TO .0005 MAX. MIN THICKNESS TO BE .0002 ON THREADED AREAS. NO ALLOWANCES FOR PLATING IN HOLES	
125 √ SURFACE ROUGHNESS INCLUDING REAMED HOLES PER MIL-STD-10	
200 √ FOR ALL DRILLED HOLES	
REMOVE ALL BURRS. BREAK ALL EDGES .015-.031	
INSPECTION INFORMATION MINIMUM PERMISSIBLE [redacted] EDGE DISTANCE [redacted] IS 1½ FASTENER DIA FROM FASTENER ℄	✓
SYMBOL √ DENOTES SURFACE TO BE MACHINED	
UNLESS OTHERWISE SPECIFIED TOLERANCE ON FLANGES IS ± 1/32	
LENGTHS OF AN, NAS & MS AL ALY RIVETS SHORTER THAN 1 INCH ARE NOT SPECIFIED	
TOLERANCE ON LOFTED DELINEATIONS IS ±1/16	✓

DWG SIZE 34x 94
PRINTING INFO ONLY

C
B
A

LDW280-52520B
LDW280-52520B

CODE IDENT NO 26512
LDW280-52520
SH 3

LM
MODEL OR END ITEM
GRUMMAN AIRCRAFT ENGRG CORP. BETHPAGE, L. I., NEW YORK

SIZE	CODE IDENT NO.		
J	26512	LDW280-52520	B
SCALE FULL		SHEET 3.00	

FOR PHOTO REPRODUCTION

THIS IS AN ORIGINAL DWG 3 FRAMES

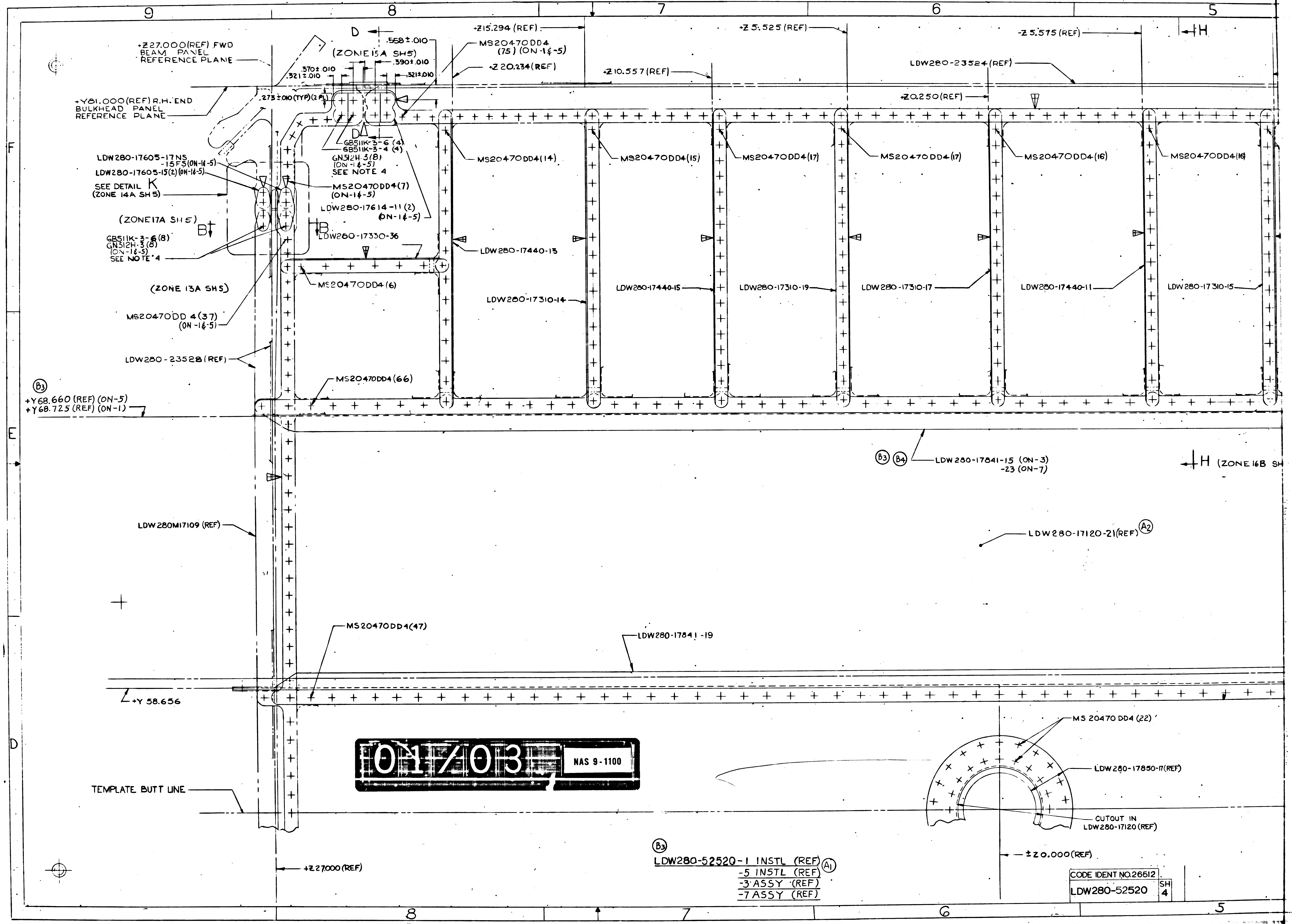

9
8
7
6
5
F
E
D
D
H
B
B
H
+Z27.000(REF) FWD BEAM PANEL REFERENCE PLANE
+Y81.000(REF) R.H. END BULKHEAD PANEL REFERENCE PLANE
(ZONE 15A SH5)
.558±.010
.370±.010
.390±.010
.321±.010
.321±.010
.273±.010 (TYP)(2 PL)
MS20470DD4 (75) (ON -1 & -5)
+Z20.234(REF)
+Z15.294 (REF)
+Z10.557 (REF)
+Z5.525 (REF)
-Z5.575 (REF)
LDW280-23524 (REF)
+Z0.250(REF)
GB511K-3-6 (4)
GB511K-3-4 (4)
GN512H-3(8) (ON-1&-5)
SEE NOTE 4
LDW280-17605-17NS
-15FS(ON-1&-5)
LDW280-17605-15(2)(ON-1&-5)
SEE DETAIL K (ZONE 14A SH 5)
MS20470DD4(7) (ON-1&-5)
LDW280-17614-11 (2) (ON-1&-5)
(ZONE17A SH5)
GB511K-3-6(8)
GN512H-3(8)
(ON-1&-5)
SEE NOTE 4
LDW280-17330-36
MS20470DD4(14)
MS20470DD4(15)
MS20470DD4(17)
MS20470DD4(17)
MS20470DD4(16)
MS20470DD4(16)
LDW280-17440-13
MS20470DD4(6)
(ZONE 13A SH5)
LDW280-17310-14
LDW280-17440-15
LDW280-17310-19
LDW280-17310-17
LDW280-17440-11
LDW280-17310-15
MS20470DD 4(37) (ON -1&-5)
LDW280-23528 (REF)
MS20470DD4(66)
B3
+Y68.660 (REF) (ON-5)
+Y68.725 (REF) (ON-1)
B3 B4 LDW280-17841-15 (ON-3) -23 (ON-7)
H (ZONE 16B SH
LDW280M17109 (REF)
LDW280-17120-21(REF) A2
MS20470DD4(47)
LDW280-17841-19
+Y 58.656
MS 20470 DD4 (22)
LDW280-17850-11(REF)
CUTOUT IN LDW280-17120 (REF)
TEMPLATE BUTT LINE
±Z0.000(REF)
+Z27.000(REF)

01/03 NAS 9-1100

B3
LDW280-52520-1 INSTL (REF) A1
-5 INSTL (REF)
-3 ASSY (REF)
-7 ASSY (REF)

CODE IDENT NO. 26512	SH
LDW280-52520	4

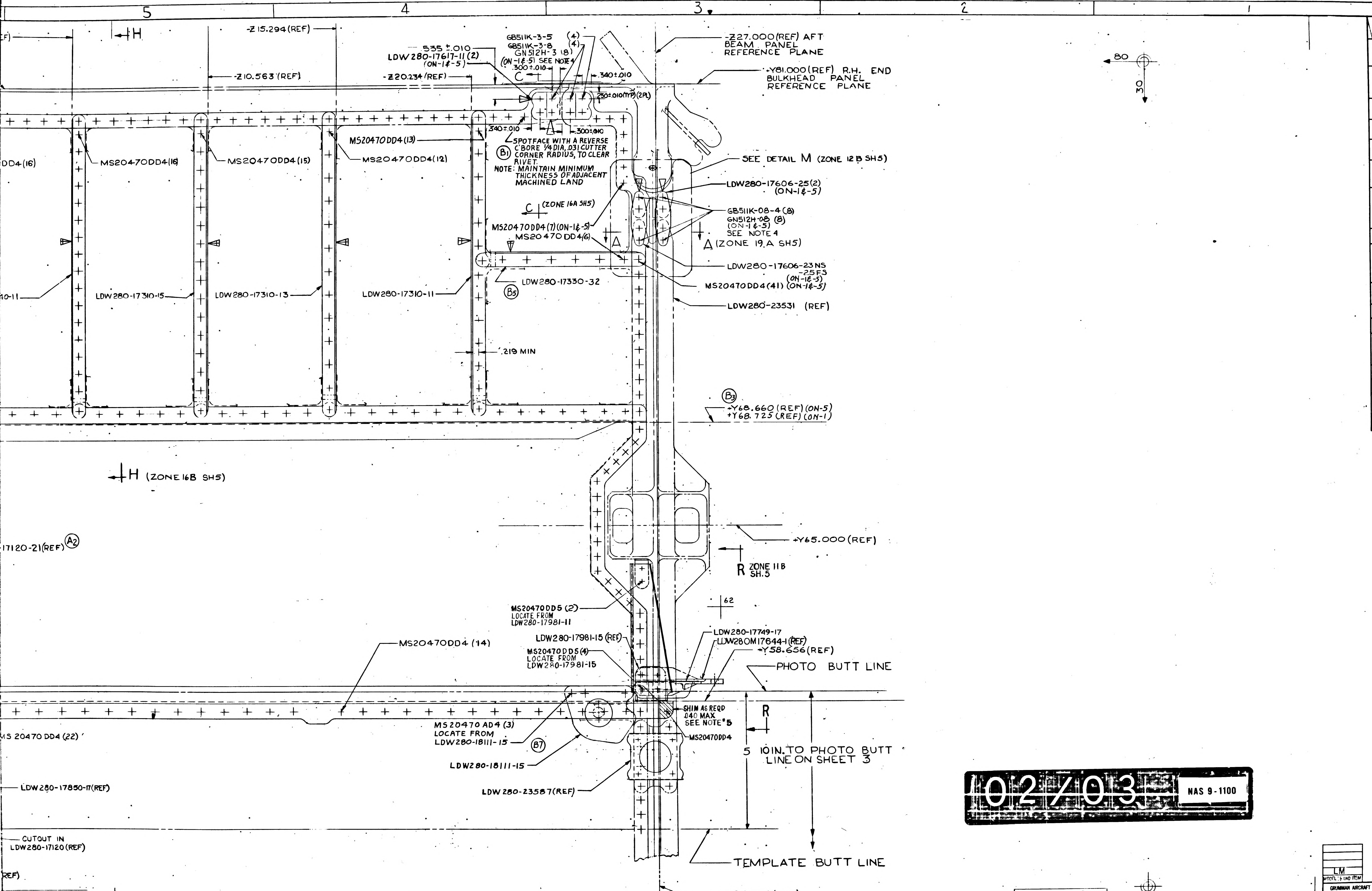
5
4
3
2
1
-Z15.294 (REF)
H
-Z10.563 (REF)
-Z20.234 (REF)
.535 ±.010
LDW280-17617-11 (2)
(ON-1℄-5)
GB511K-3-5 (4)
GB511K-3-8 (4)
GN512H-3 (8)
(ON-1℄-5) SEE NOTE 4
.300±.010
C
.340±.010
.250±.010 (TYP) (2PL)
-Z27.000 (REF) AFT BEAM PANEL REFERENCE PLANE
+Y81.000 (REF) R.H. END BULKHEAD PANEL REFERENCE PLANE
80
30
.340±.010
.300±.010
SPOTFACE WITH A REVERSE C'BORE 1/4 DIA, .031 CUTTER CORNER RADIUS, TO CLEAR RIVET.
B1
NOTE: MAINTAIN MINIMUM THICKNESS OF ADJACENT MACHINED LAND
MS20470DD4 (13)
MS20470DD4 (12)
MS20470DD4 (15)
MS20470DD4 (16)
DD4 (16)
C (ZONE 16A SH5)
MS20470DD4 (7) (ON-1℄-5)
MS20470DD4 (6)
A
SEE DETAIL M (ZONE 12B SH5)
LDW280-17606-25 (2) (ON-1℄-5)
GB511K-08-4 (8)
GN512H-08 (8)
(ON-1℄-5)
SEE NOTE 4
A (ZONE 19.A SH5)
LDW280-17606-23NS -25FS (ON-1℄-5)
MS20470DD4 (41) (ON-1℄-5)
LDW280-23531 (REF)
LDW280-17330-32
B5
40-11
LDW280-17310-15
LDW280-17310-13
LDW280-17310-11
.219 MIN
B3
+Y68.660 (REF) (ON-5)
+Y68.725 (REF) (ON-1)
H (ZONE 16B SH5)
17120-21 (REF)
A2
+Y65.000 (REF)
R ZONE 11B SH.5
62
MS20470DD5 (2) LOCATE FROM LDW280-17981-11
LDW280-17981-15 (REF)
MS20470DD5 (4) LOCATE FROM LDW280-17981-15
MS20470DD4 (14)
LDW280-17749-17
LDW280M17644-1 (REF)
+Y58.656 (REF)
PHOTO BUTT LINE
SHIM AS REQD .040 MAX SEE NOTE 5
MS20470DD4
R
MS20470AD4 (3) LOCATE FROM LDW280-18111-15
B7
LDW280-18111-15
LDW280-23587 (REF)
5
10 IN. TO PHOTO BUTT LINE ON SHEET 3
S 20470 DD4 (22)
LDW280-17850-17 (REF)
CUTOUT IN LDW280-17120 (REF)
REF)
TEMPLATE BUTT LINE
-Z27.000 (REF)

02/03 NAS 9-1100

CODE IDENT NO. 26512
LDW280-52520 SH 4

CODE IDENT NO. 26512
LDW280-52520 SH 4

LM
GRUMMAN AIRCRAFT ENGRG CORP. BETHP
SIZE J CODE IDENT NO. 26512 LDW280-5
SCALE

5 4 3 2 1

FOR PHOTO REPR

THIS IS AN ORIGINAL DW

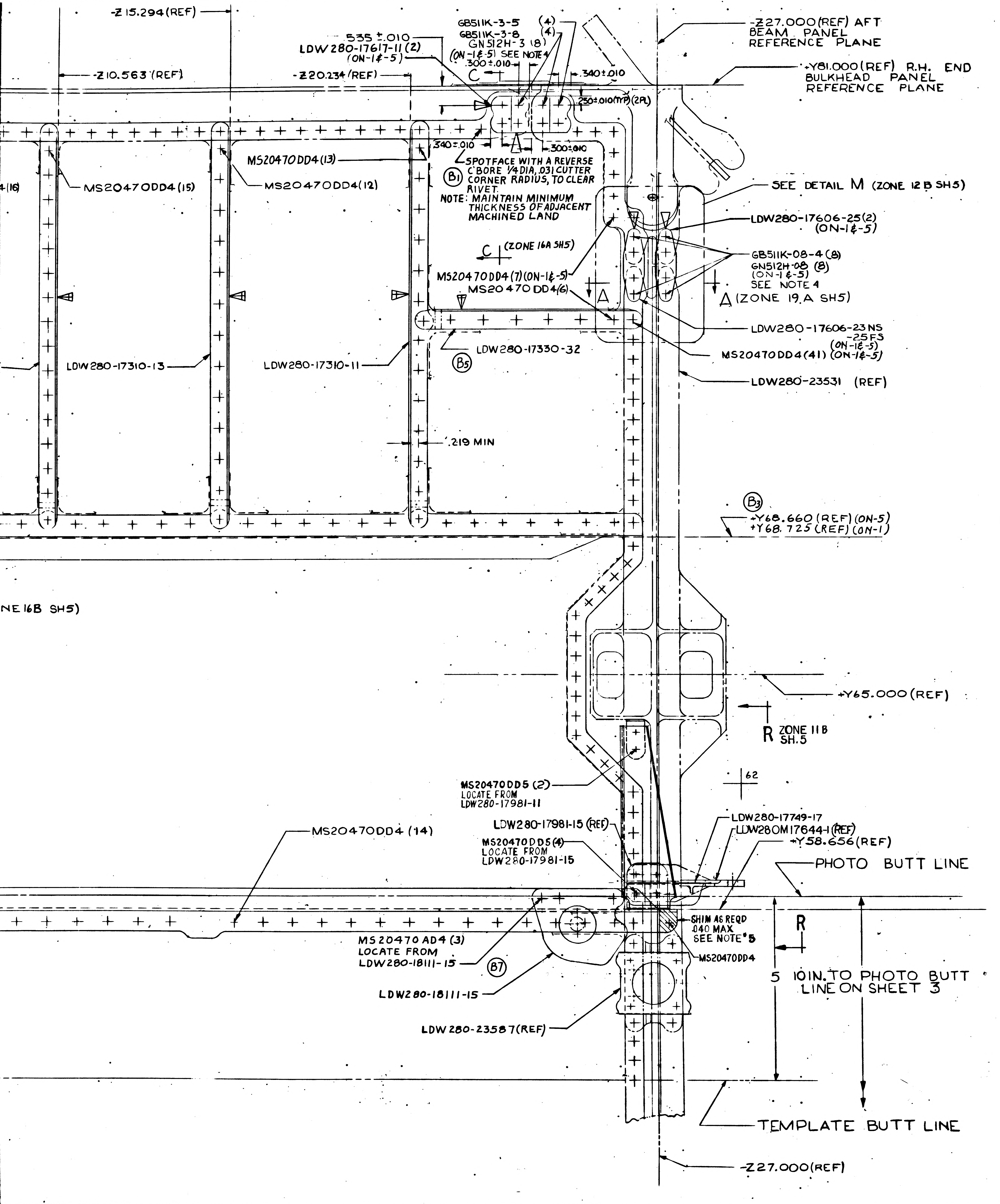
4
3
2
1
-Z15.294(REF)
-Z10.563(REF)
-Z20.234(REF)
.535±.010
LDW280-17617-11 (2)
(ON-1 & -5)
GB511K-3-5 (4)
GB511K-3-8 (4)
GN512H-3 (8)
(ON-1&-5) SEE NOTE 4
.300±.010
C
.340±.010
.250±.010(TYP)(2PL)
-Z27.000(REF) AFT BEAM PANEL REFERENCE PLANE
+Y81.000(REF) R.H. END BULKHEAD PANEL REFERENCE PLANE
.340±.010
.300±.010
MS20470DD4(13)
(16)
MS20470DD4(15)
MS20470DD4(12)
B1
SPOTFACE WITH A REVERSE C'BORE 1/4 DIA, .031 CUTTER CORNER RADIUS, TO CLEAR RIVET.
NOTE: MAINTAIN MINIMUM THICKNESS OF ADJACENT MACHINED LAND
SEE DETAIL M (ZONE 12 B SH5)
LDW280-17606-25(2) (ON-1&-5)
C (ZONE 16A SH5)
GB511K-08-4 (8)
GN512H-08 (8)
(ON-1&-5)
SEE NOTE 4
MS20470DD4(7)(ON-1&-5)
MS20470DD4(6)
A
A (ZONE 19.A SH5)
LDW280-17606-23NS
-25FS
(ON-1&-5)
LDW280-17330-32
B5
MS20470DD4(41) (ON-1&-5)
LDW280-17310-13
LDW280-17310-11
LDW280-23531 (REF)
.219 MIN
B3
+Y68.660(REF)(ON-5)
+Y68.725(REF)(ON-1)
NE 16B SH5)
+Y65.000(REF)
R ZONE 11B SH.5
62
MS20470DD5 (2)
LOCATE FROM
LDW280-17981-11
MS20470DD4 (14)
LDW280-17981-15 (REF)
MS20470DD5(4)
LOCATE FROM
LDW280-17981-15
LDW280-17749-17
LDW280M17644-1(REF)
+Y58.656(REF)
PHOTO BUTT LINE
SHIM AS REQD
.040 MAX
SEE NOTE 5
MS20470DD4
R
MS20470AD4 (3)
LOCATE FROM
LDW280-18111-15
B7
LDW280-18111-15
5 10IN. TO PHOTO BUTT LINE ON SHEET 3
LDW280-23587(REF)
TEMPLATE BUTT LINE
-Z27.000(REF)
4
3
2
1

~~MANUFACTURING OPERATIONS~~
~~UNLESS OTHERWISE SPECIFIED~~
~~NOTES CHECKED ✓ APPLY TO THIS DWG.~~

~~PART NUMBER AND ALL OTHER MARKINGS IN REGION MARKED ☒ USE BOTH SIDES IF NECESSARY.~~

~~FILLET AND INSIDE CORNER RADII TOLERANCES~~
~~.016R TO .062R ± .010~~
~~.063R TO .250R ± .015~~
~~OVER .250R ± .030~~

~~DEPTH SHOWN FOR TAPPED HOLES IS FULL THDS. 2-3 IMP. THDS. BEYOND PERMISSIBLE~~

~~EXTERNAL THREAD LENGTH SHOWN INCLUDES 2 IMPERFECT THREADS MAX.~~

~~DO NOT CADMIUM PLATE & PAINT HOLES OR SURFACES MARKED WITH DOUBLE ASTERISK.~~

~~MISMATCH STEP OF ± .005 PERMISSIBLE DUE TO CHANGE OF CUTTERS AT INSIDE INTERSECTING SURFACES.~~

~~DIAMETERS MARKED MUST BE CONCENTRIC WITHIN FULL INDICATOR READING.~~

~~HOLES MUST BE KEPT FREE OF CHROME PLATING SOLUTION.~~

~~ALL DIMENSIONS SHOWN TO BE MET AFTER CADMIUM PLATING. THICKNESS OF PLATE .0003 MIN TO .0005 MAX. MIN THICKNESS TO BE .0002 ON THREADED AREAS. NO ALLOWANCES FOR PLATING IN HOLES~~

~~125 √ SURFACE ROUGHNESS INCLUDING REAMED HOLES PER MIL-STD-10~~

~~200 √ FOR ALL DRILLED HOLES~~

~~REMOVE ALL BURRS. BREAK ALL EDGES .015-.031~~

~~INSPECTION INFORMATION MINIMUM PERMISSIBLE AVERAGE EDGE DISTANCE MARKED IS~~

~~SYMBOL √ DENOTES SURFACE TO BE MACHINED~~

~~UNLESS OTHERWISE SPECIFIED TOLERANCE ON FLANGES IS ± 1/32~~

~~LENGTHS OF AN, NAS & MS AL ALY RIVETS SHORTER THAN 1 INCH ARE NOT SPECIFIED~~

~~TOLERANCE ON LOFTED DELINEATIONS IS~~

DWG SIZE 34 x 94

PRINTING INFO ONLY

FULL SIZE SHEET AREA = 24.9 SQ. FT

1/2 SIZE SHEET AREA (1/4 OF FULL) = 6.2 SQ. FT

F

E

D

LDW280-52520B

LDW280-52520B

103/013

NAS 9-1100

LM
MODEL OR END ITEM

CODE IDENT NO. 26512
LDW280-52520 SH 4

GRUMMAN AIRCRAFT ENGRG CORP. BETHPAGE, L. I., NEW YORK

SIZE	CODE IDENT NO.		
J	26512	LDW280-52520	B
SCALE		SHEET	4.00

FOR PHOTO REPRODUCTION

THIS IS AN ORIGINAL DWG 3 FRAMES

LDW 280-52520 SHEET 5

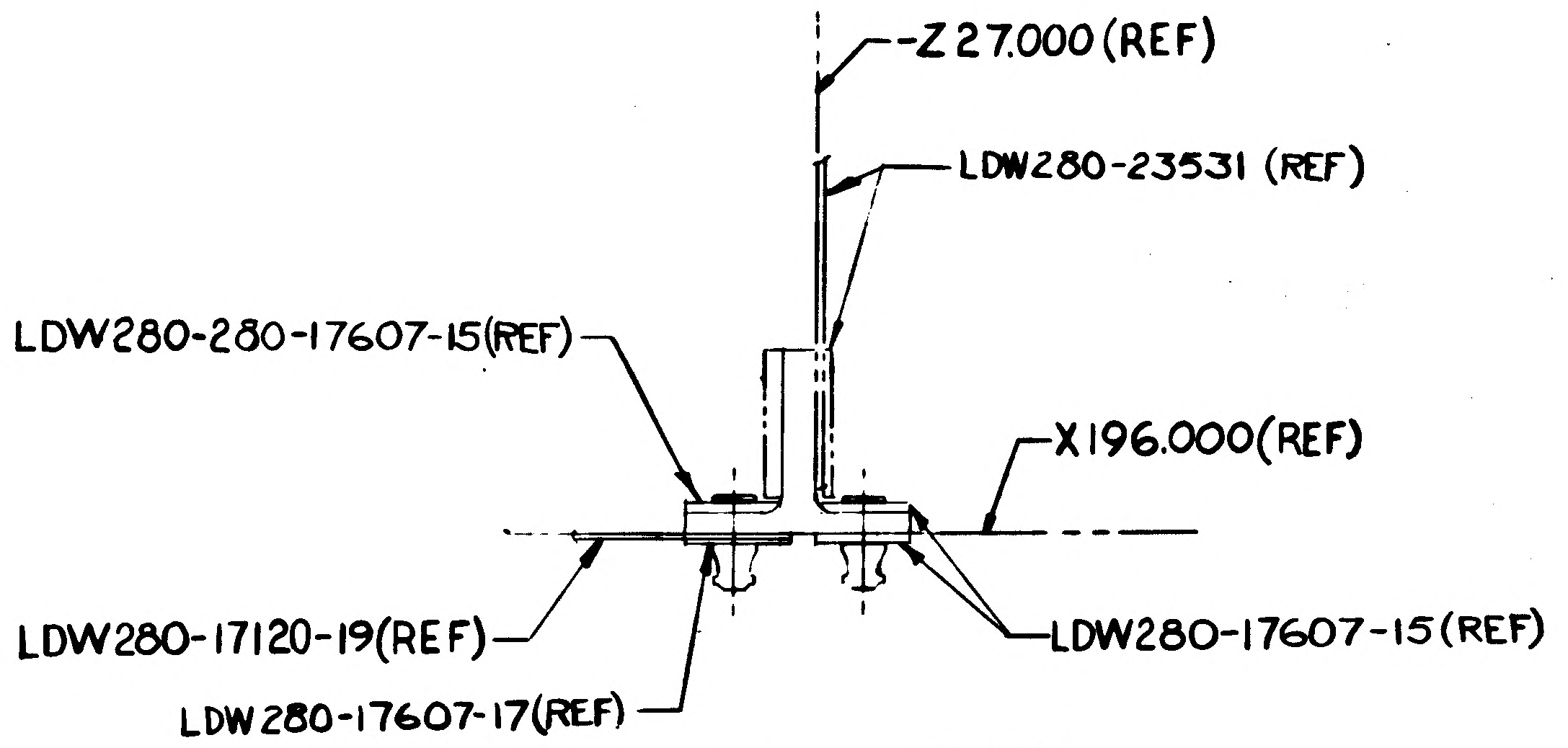

-Z 27.000 (REF)
LDW280-23531 (REF)
LDW280-280-17607-15(REF)
X196.000(REF)
LDW280-17120-19(REF)
LDW280-17607-15(REF)
LDW280-17607-17(REF)

SECTION E-E
(ZONE 3A SH3)

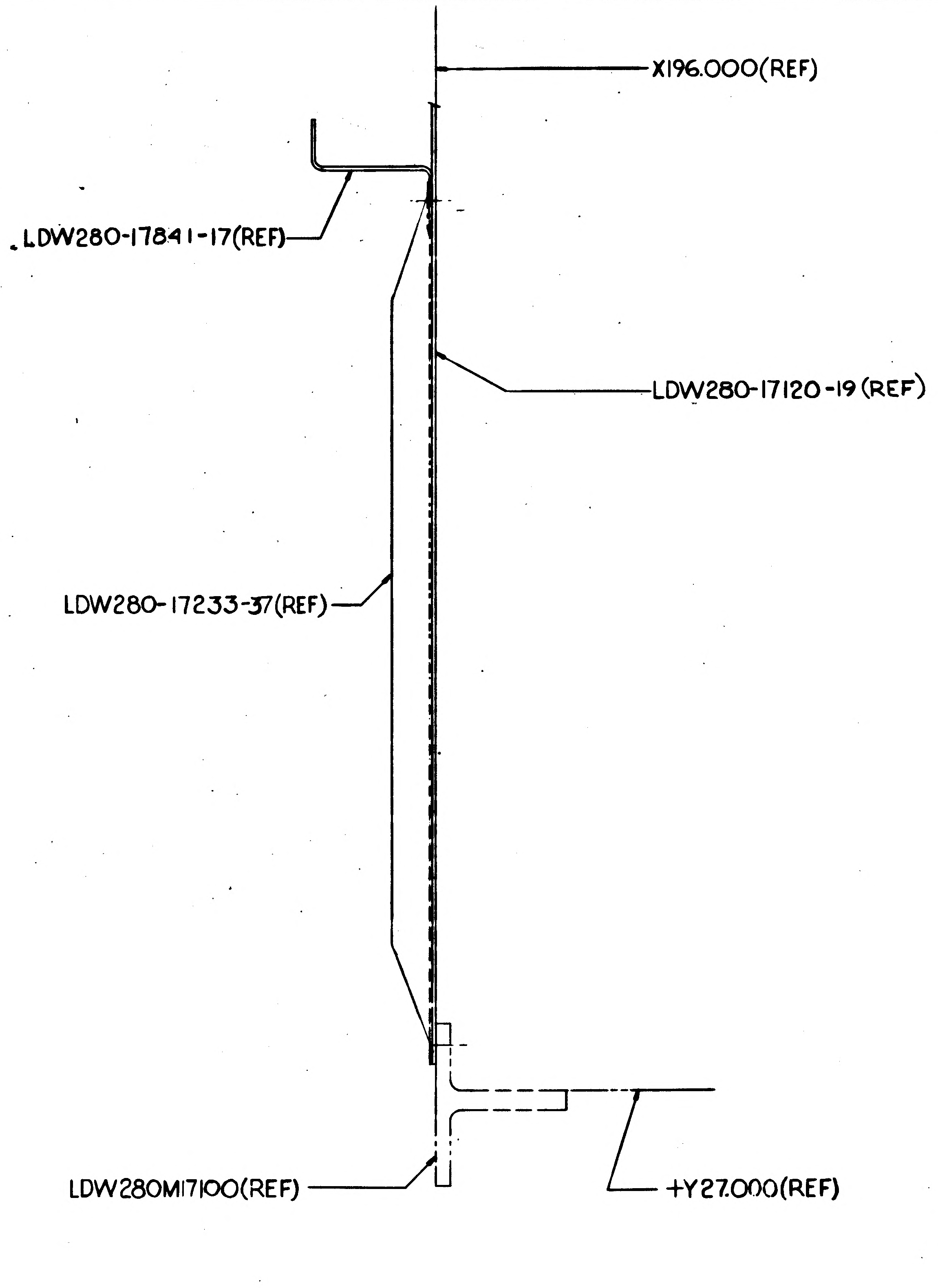

X196.000(REF)
LDW280-17841-17(REF)
LDW280-17120-19(REF)
LDW280-17233-37(REF)
LDW280M17100(REF)
+Y27.000(REF)

SECTION G-G
(ZONE 6B SH3)

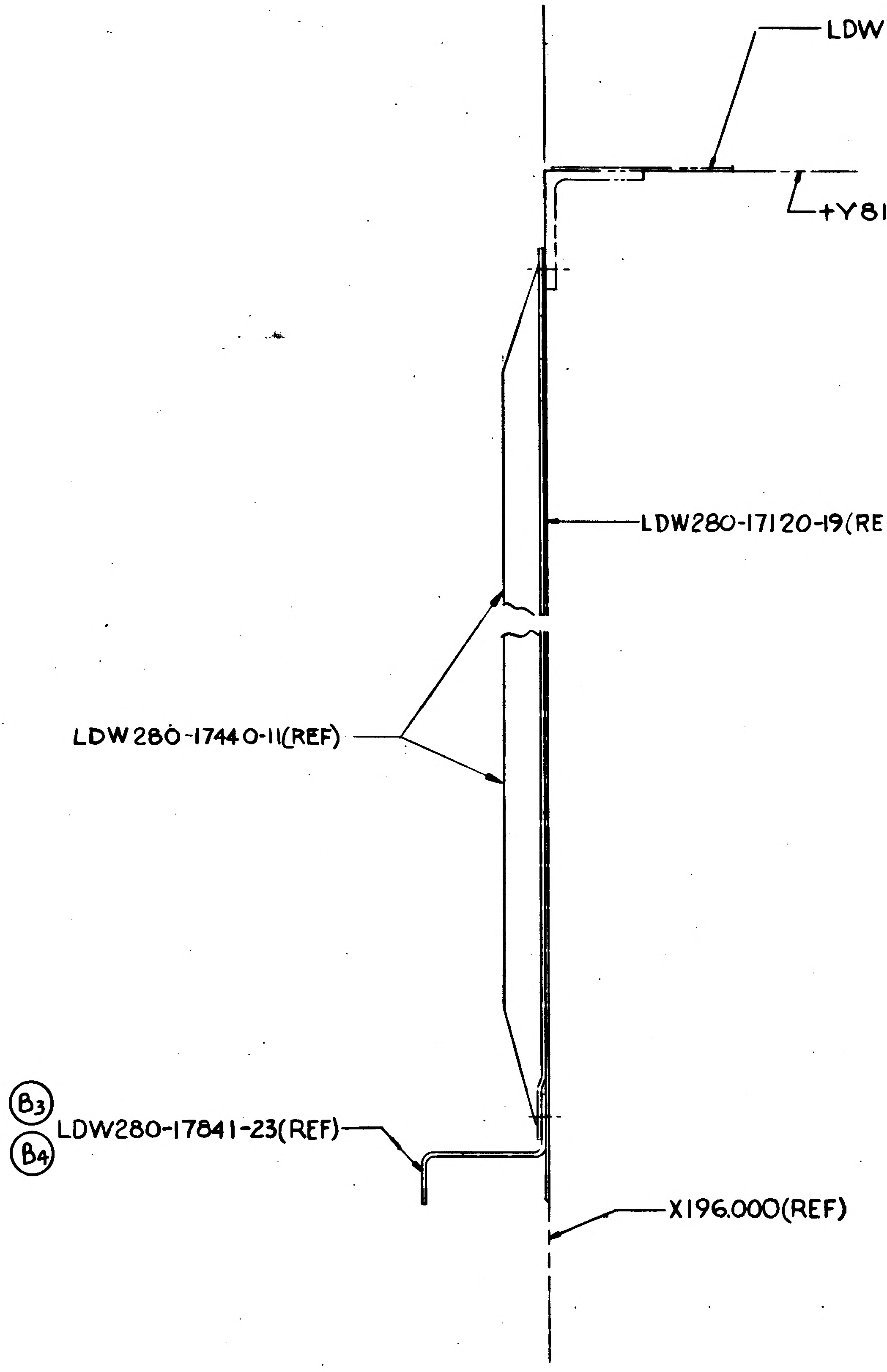

LDW280-23524(REF)
+Y81.000(REF)
LDW280-17120-19(REF)
LDW280-17440-11(REF)
B3
B4
LDW280-17841-23(REF)
X196.000(REF)

SECTION H-H
(ZONE 5E SH 4)

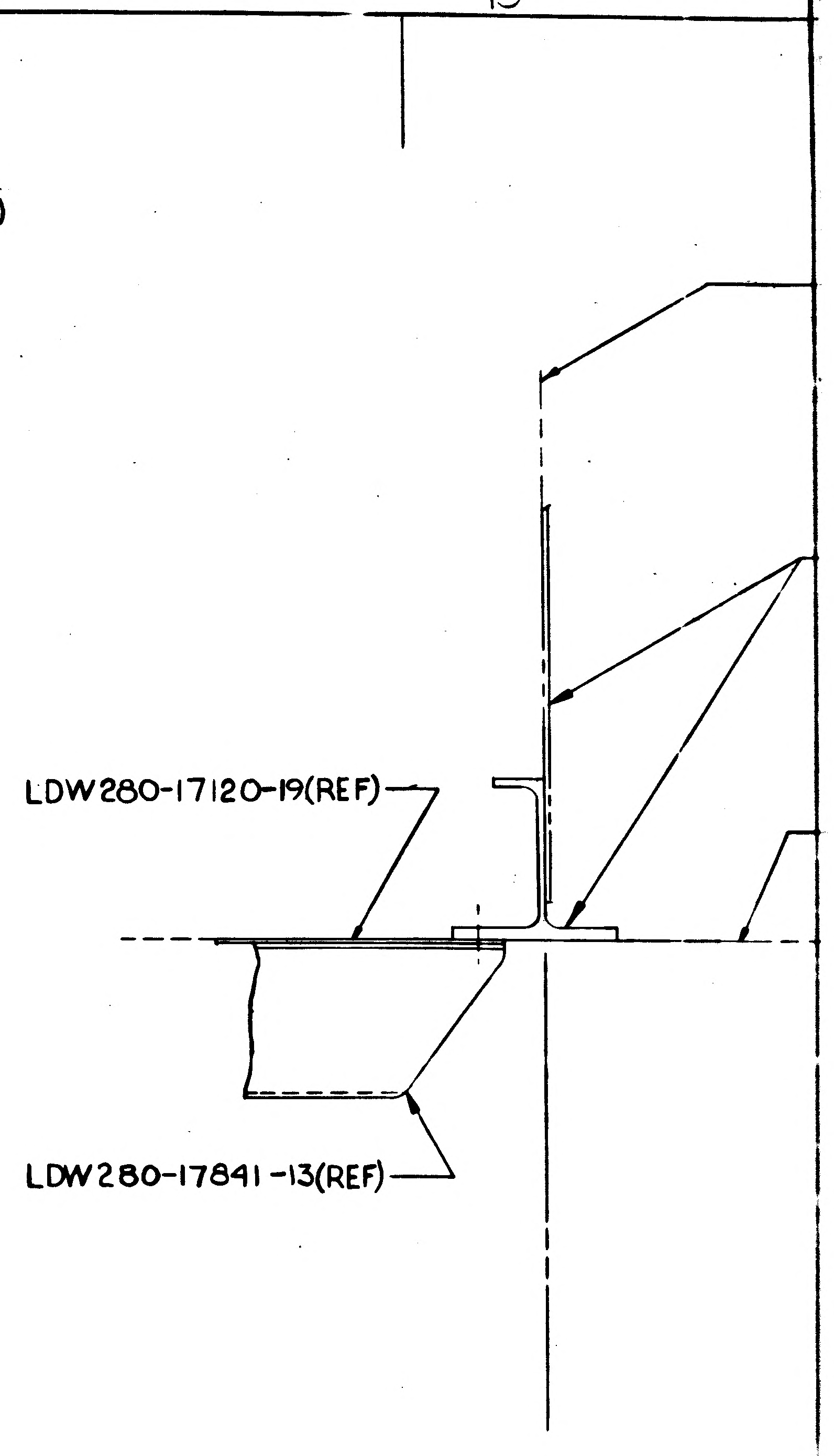

LDW280-17120-19(REF)
LDW280-17841-13(REF)

SECTION J-J
(ZONE 3C SH 3)

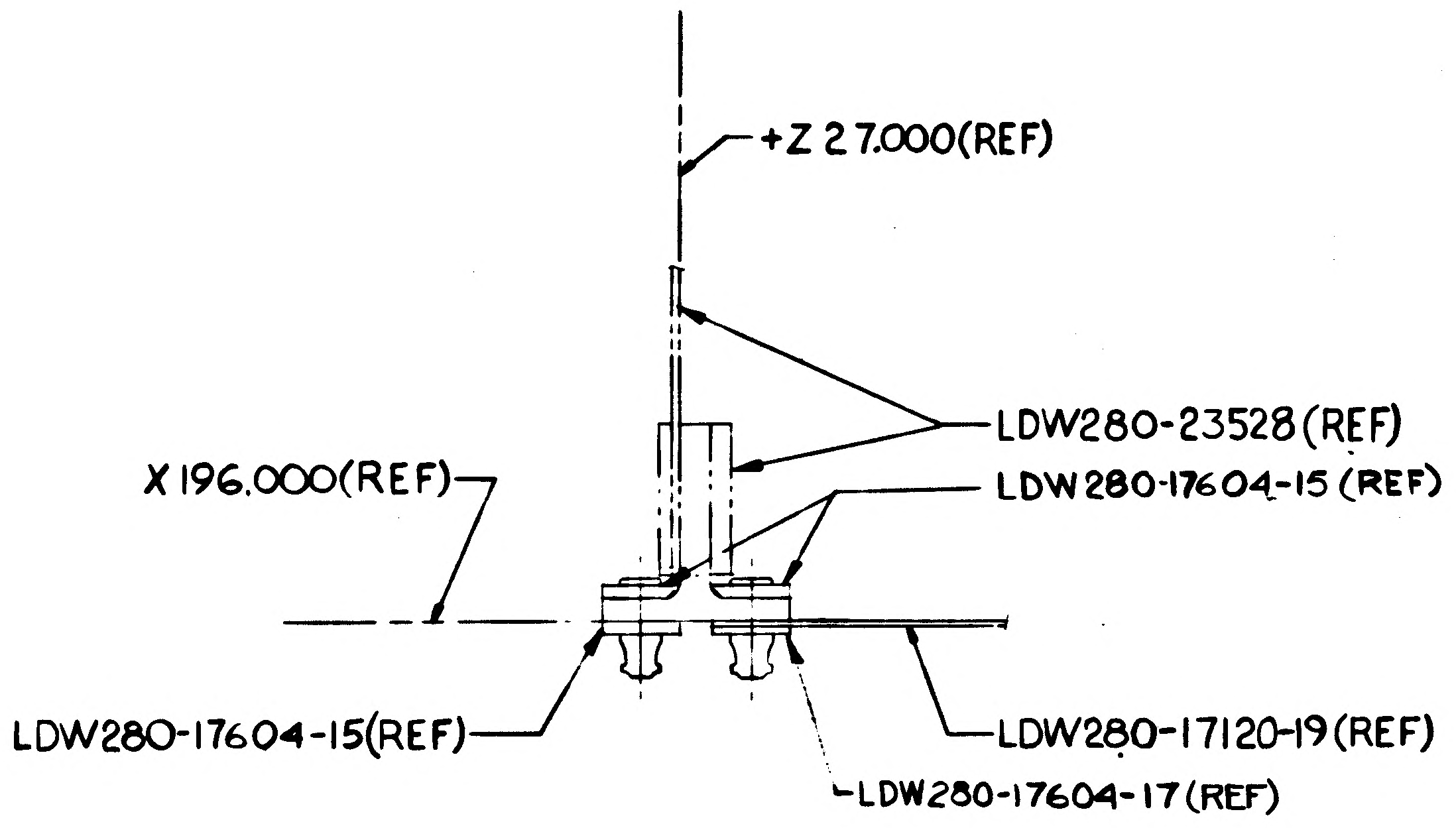

+Z 27.000(REF)
LDW280-23528(REF)
LDW280-17604-15(REF)
X196.000(REF)
LDW280-17604-15(REF)
LDW280-17120-19(REF)
LDW280-17604-17(REF)

SECTION F-F
(ZONE 8A SH 3)

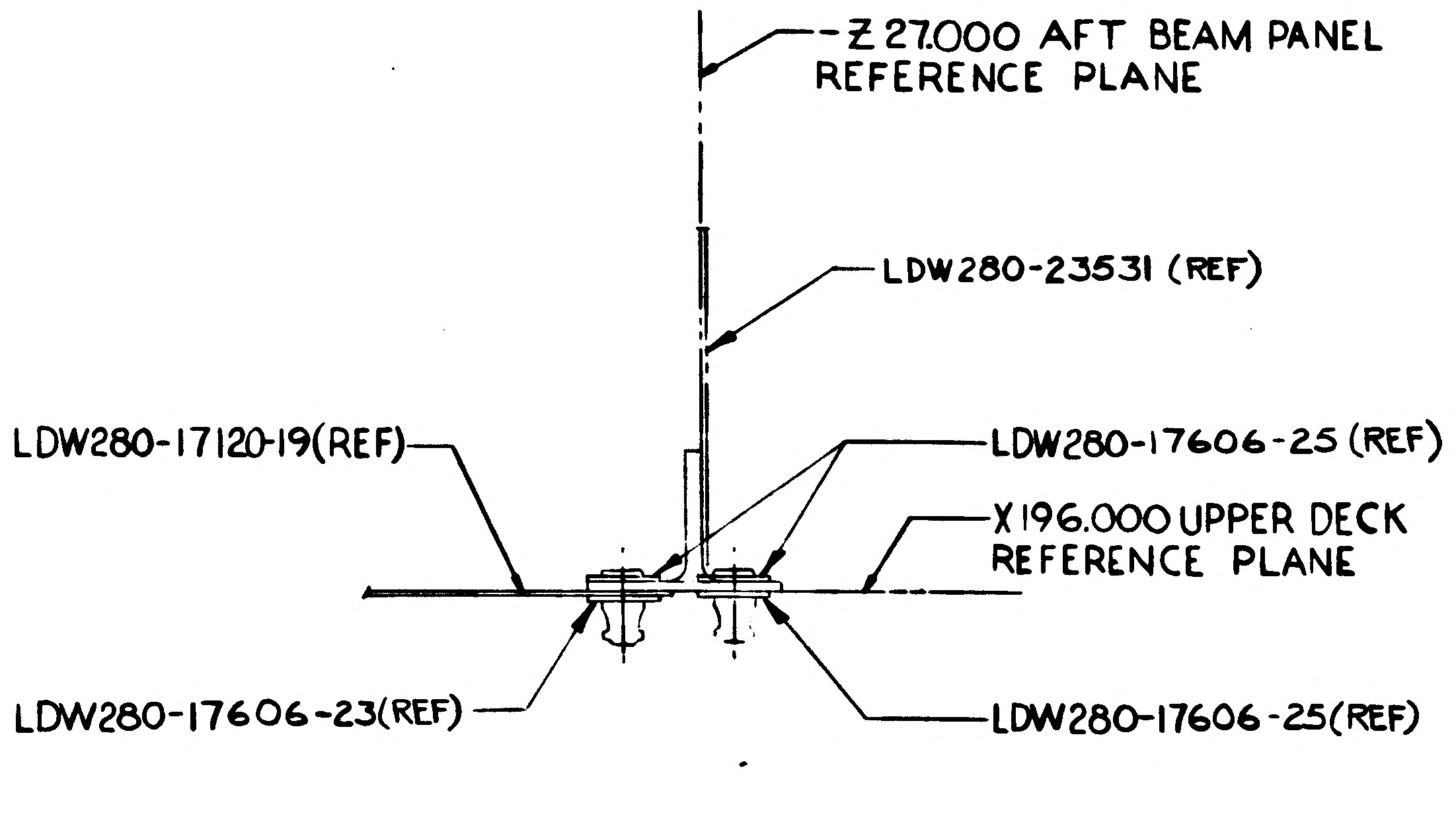

-Z 27.000 AFT BEAM PANEL REFERENCE PLANE
LDW280-23531 (REF)
LDW280-17120-19(REF)
LDW280-17606-25 (REF)
X196.000 UPPER DECK REFERENCE PLANE
LDW280-17606-23(REF)
LDW280-17606-25(REF)

SECTION A-A
(ZONE 3F SH 4)

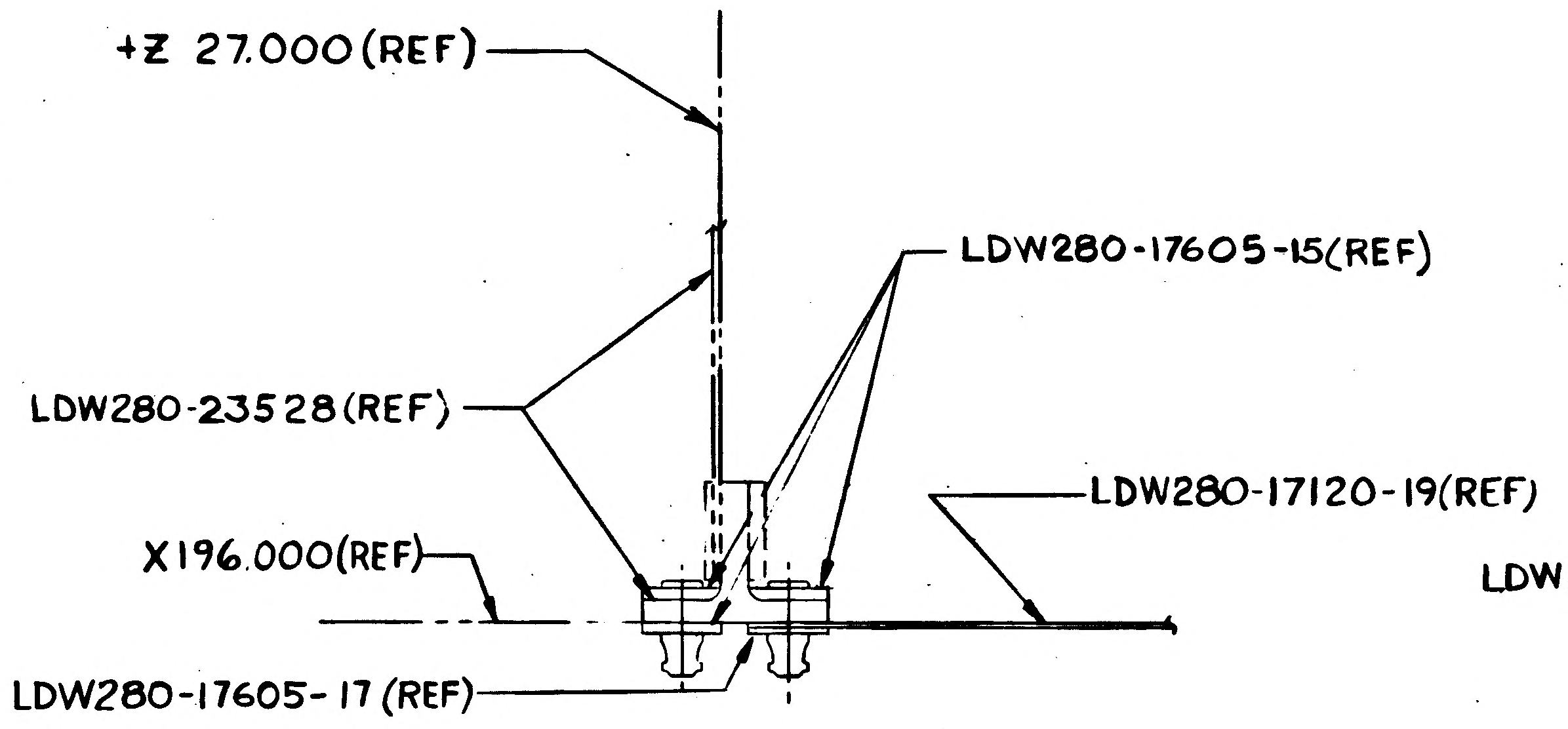

+Z 27.000(REF)
LDW280-17605-15(REF)
LDW280-23528(REF)
LDW280-17120-19(REF)
X196.000(REF)
LDW280-17605-17(REF)

SECTION B-B
(ZONE 9F SH 4)

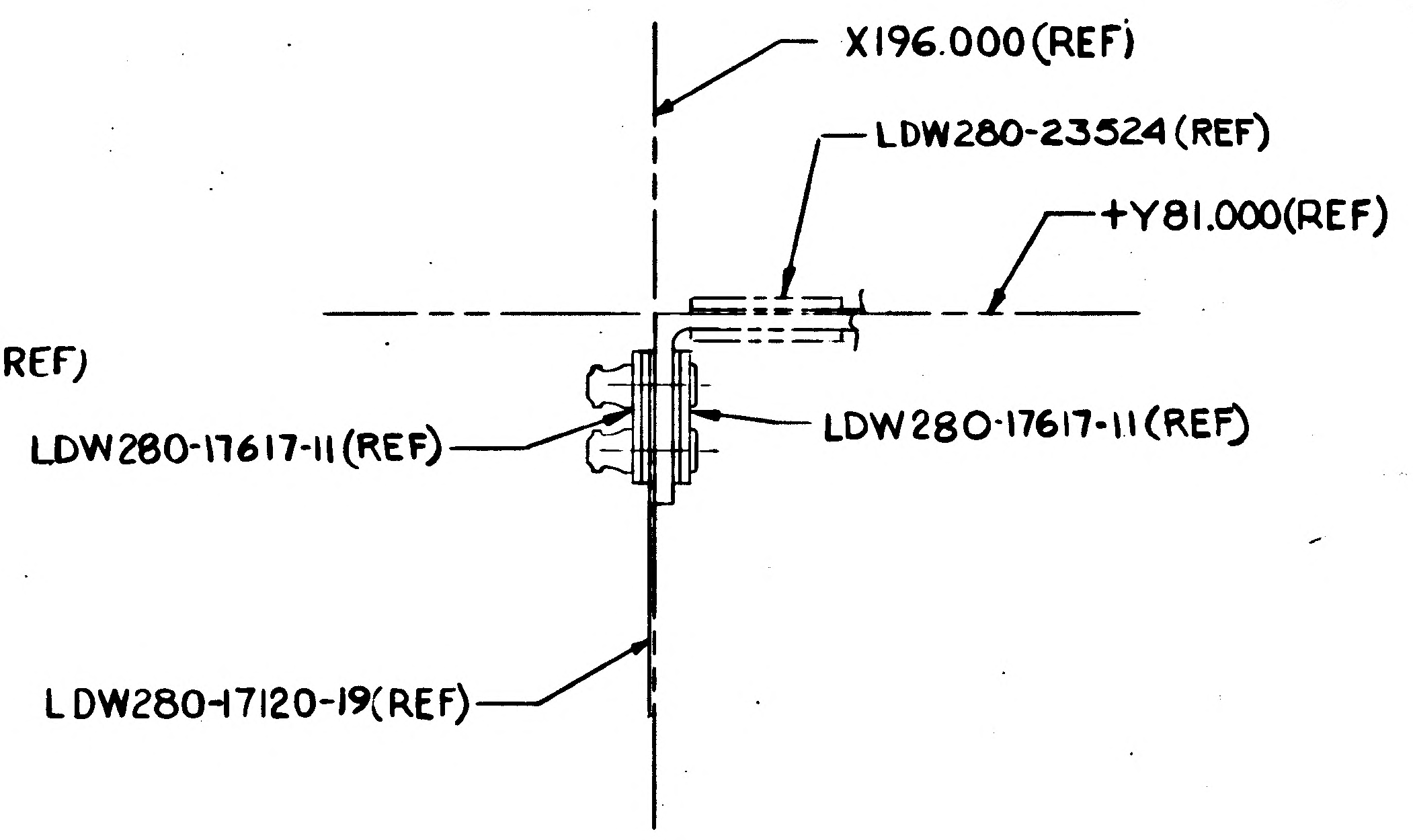

X196.000(REF)
LDW280-23524(REF)
+Y81.000(REF)
LDW280-17617-11(REF)
LDW280-17617-11(REF)
LDW280-17120-19(REF)

SECTION C-C
(ZONE 4F SH 4)

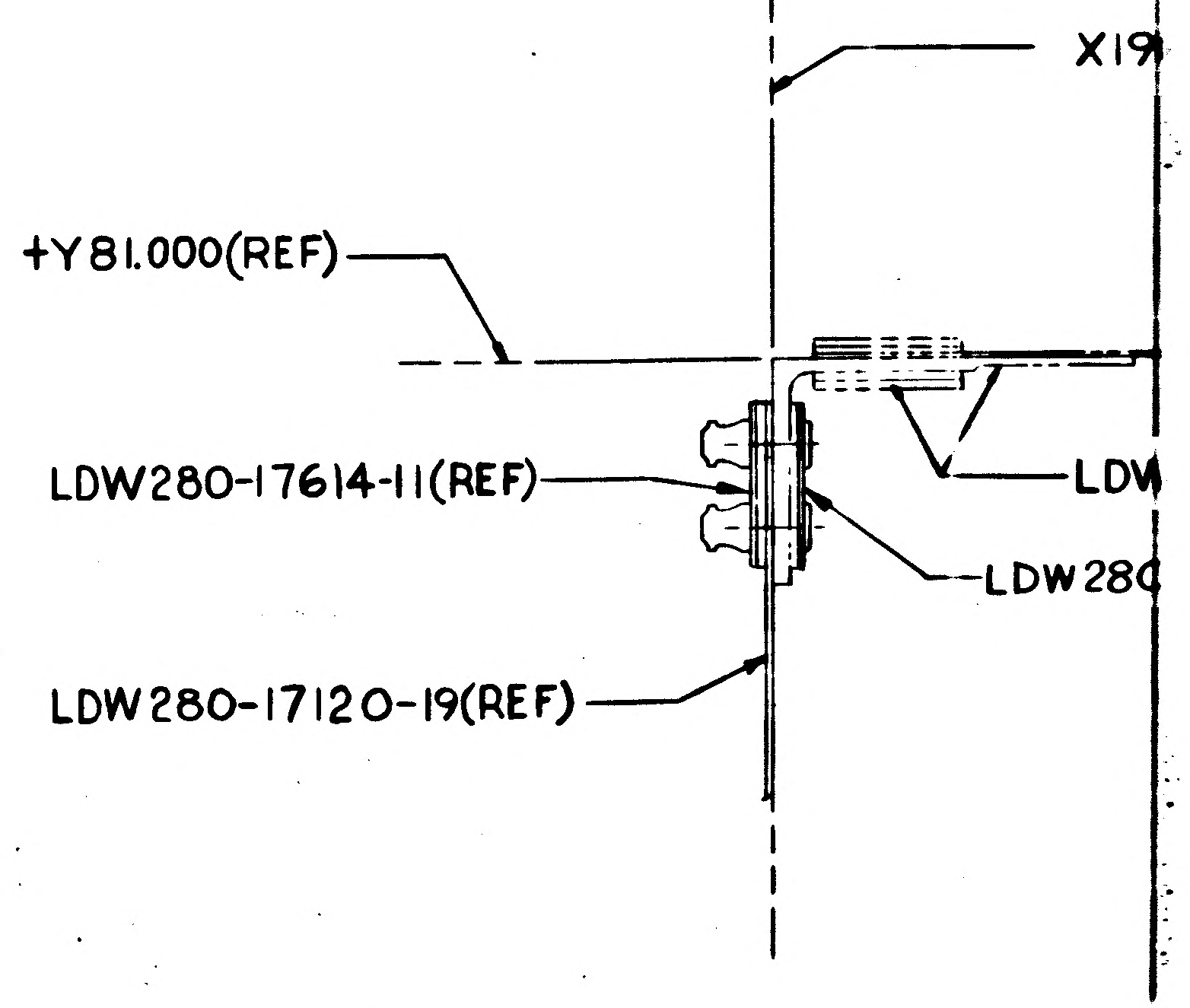

X19
+Y81.000(REF)
LDW280-17614-11(REF)
LDW
LDW280
LDW280-17120-19(REF)

SECTION D-D
(ZONE 8F SH 4)

01/03

NAS 9-1100

3/3

CODE IDENT NO. 26512	SH
LDW280-52520	5

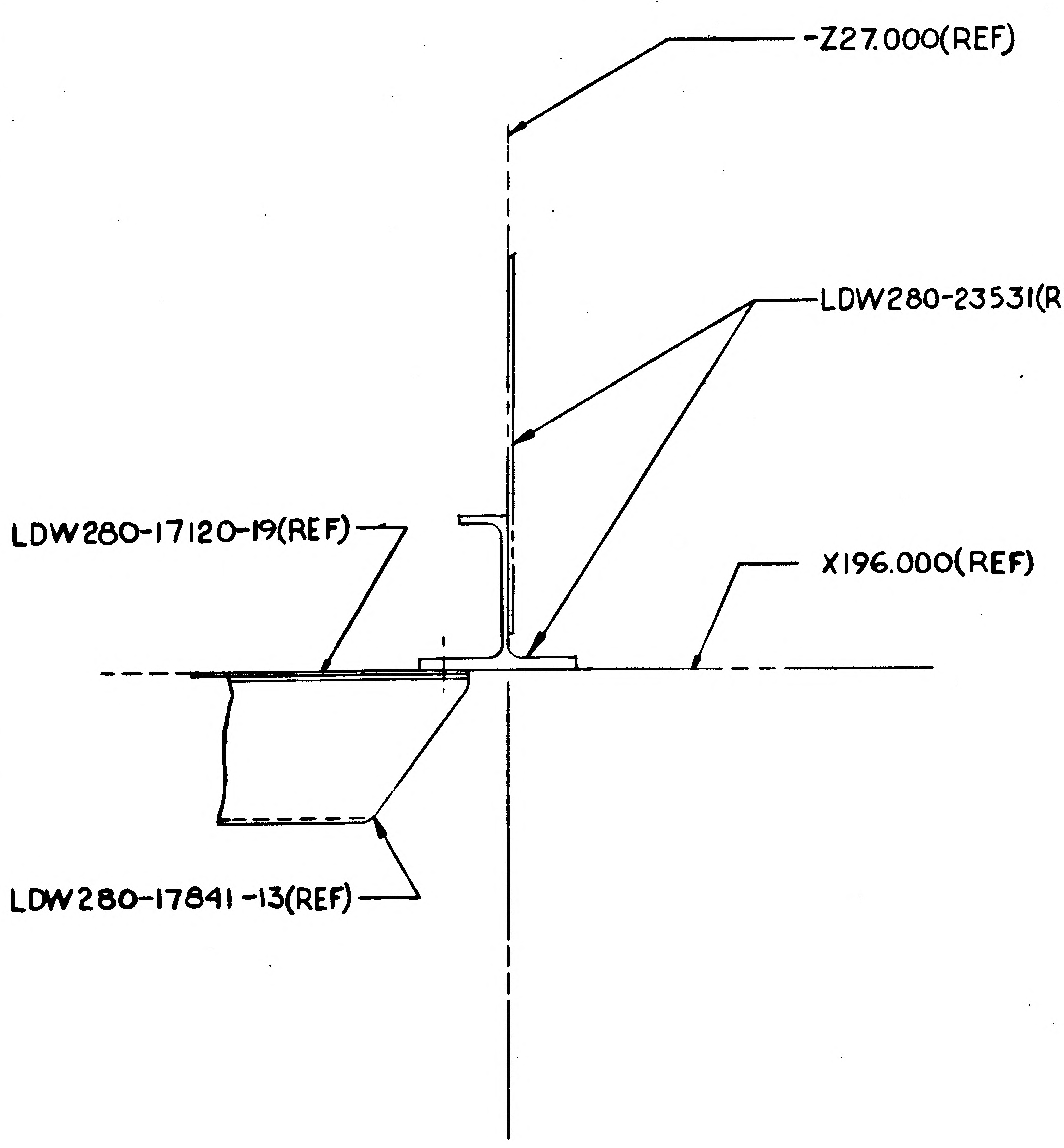
-Z27.000(REF)
LDW280-23531(REF)
LDW280-17120-19(REF)
X196.000(REF)
LDW280-17841-13(REF)

SECTION J-J
(ZONE 3 C SH 3)

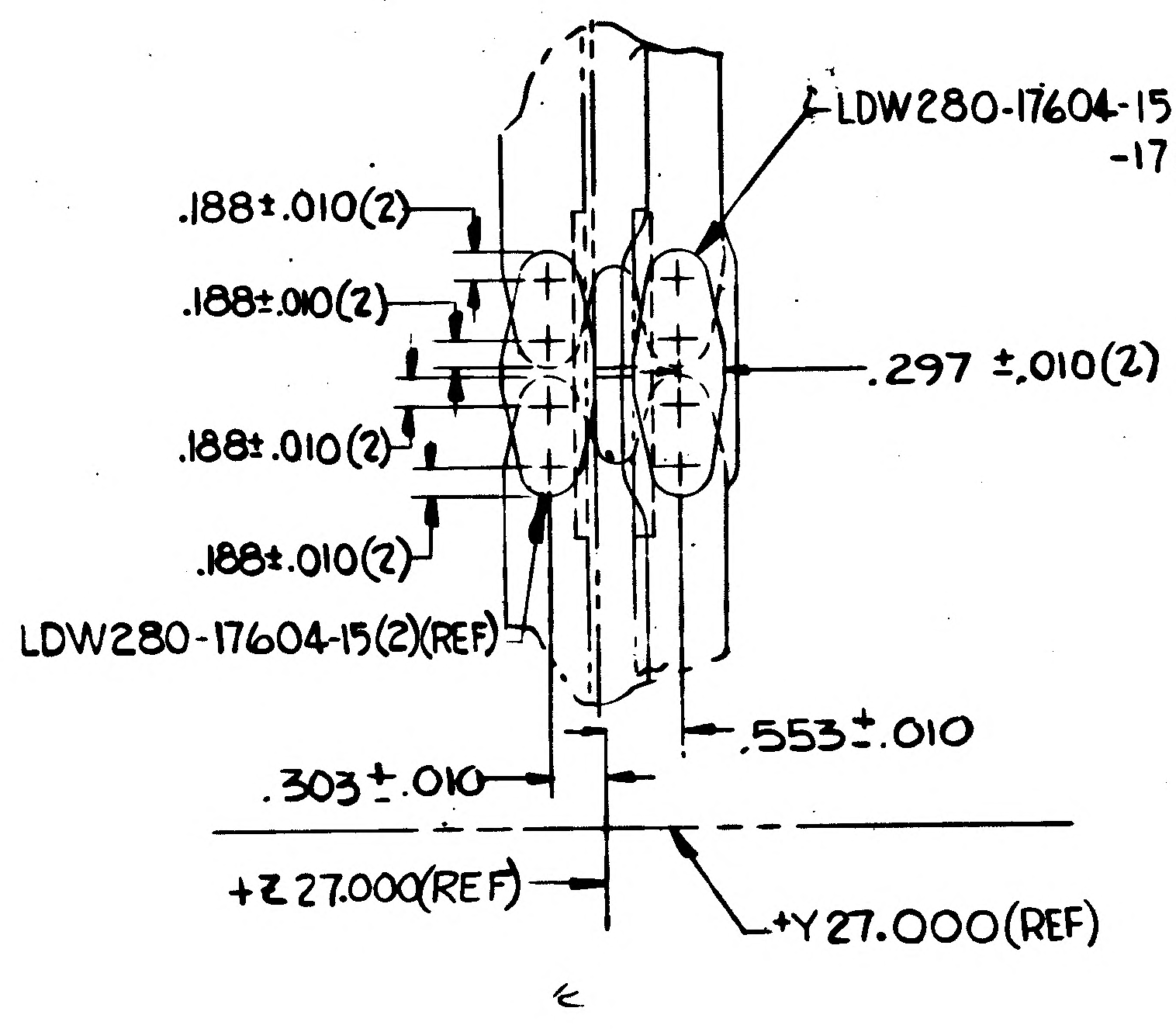
LDW280-17604-15(FS)(REF)
-17(NS)(REF)
.188±.010(2)
.188±.010(2)
.297 ±.010(2)
.188±.010(2)
.188±.010(2)
LDW280-17604-15(2)(REF)
.553±.010
.303±.010
+Z 27.000(REF)
+Y27.000(REF)

DETAIL L (ZONE 9A SH3)

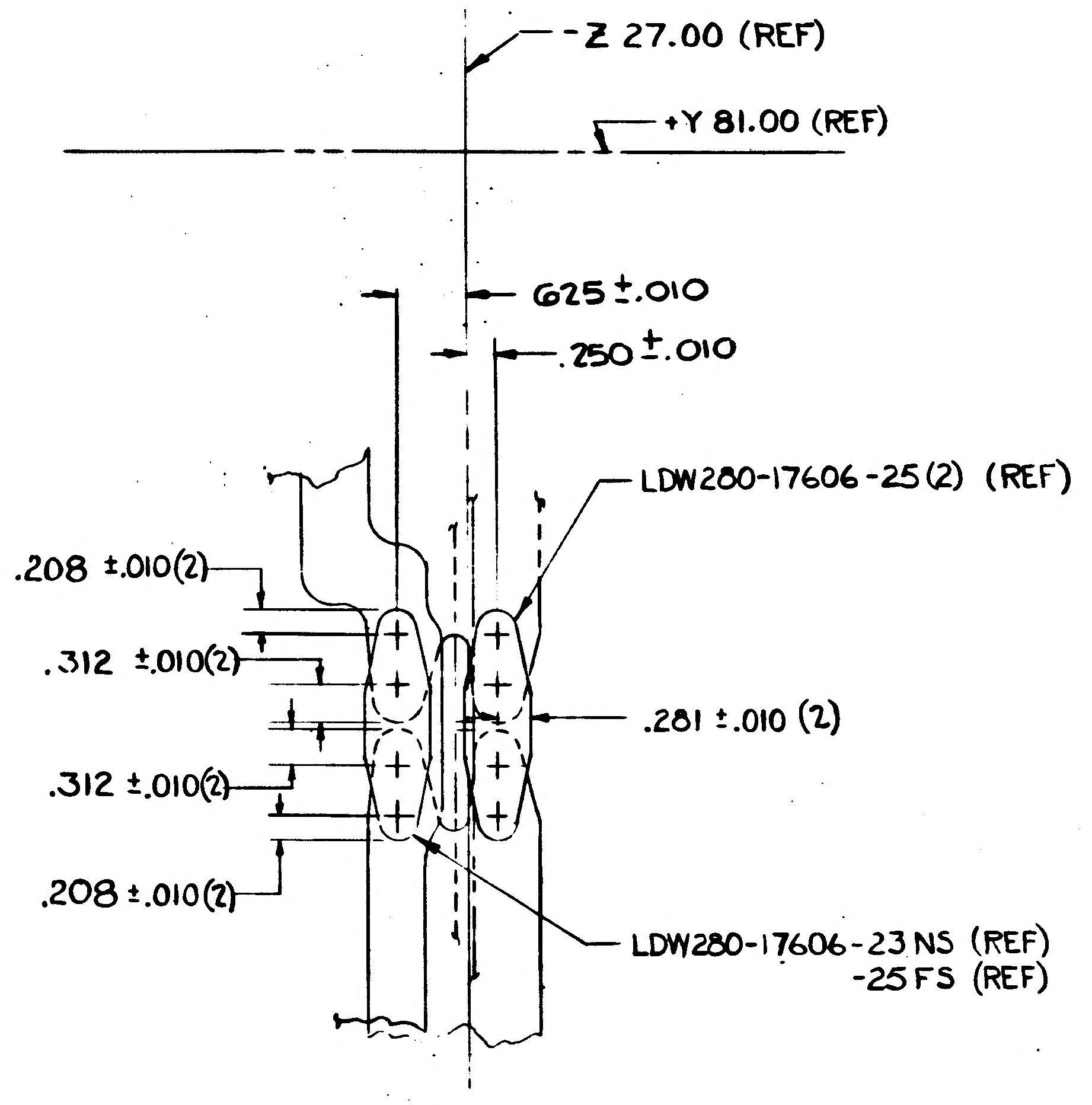
-Z 27.00 (REF)
+Y 81.00 (REF)
.625±.010
.250±.010
LDW280-17606-25(2) (REF)
.208 ±.010(2)
.312 ±.010(2)
.281 ±.010 (2)
.312 ±.010(2)
.208 ±.010(2)
LDW280-17606-23 NS (REF)
-25 FS (REF)

DETAIL M (ZONE 3F SH 4)

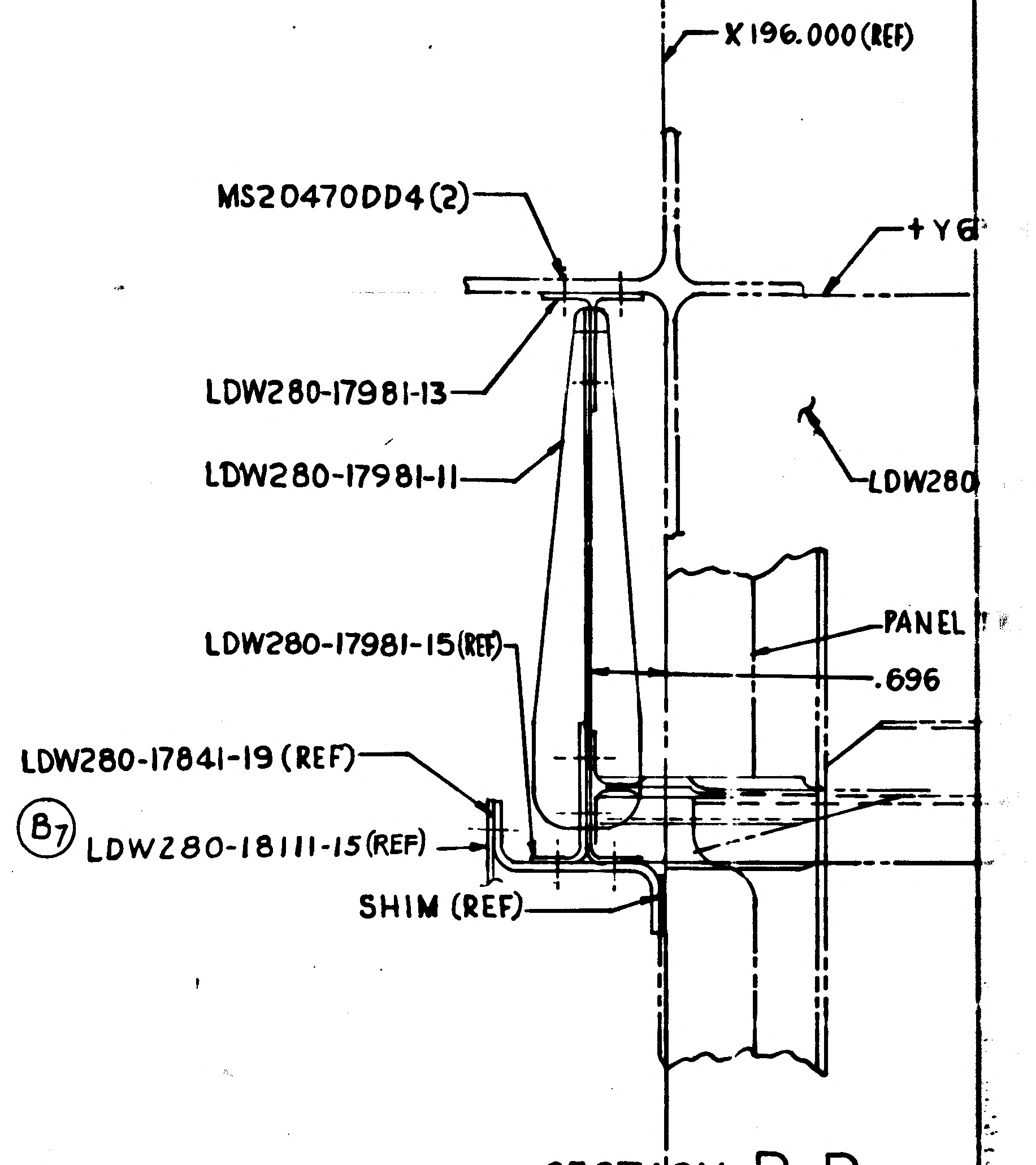
X 196.000(REF)
MS20470DD4(2)
+Y6
LDW280-17981-13
LDW280-17981-11
LDW280
PANEL
.696
LDW280-17981-15(REF)
LDW280-17841-19 (REF)
B7
LDW280-18111-15(REF)
SHIM (REF)

SECTION R-R ZONE

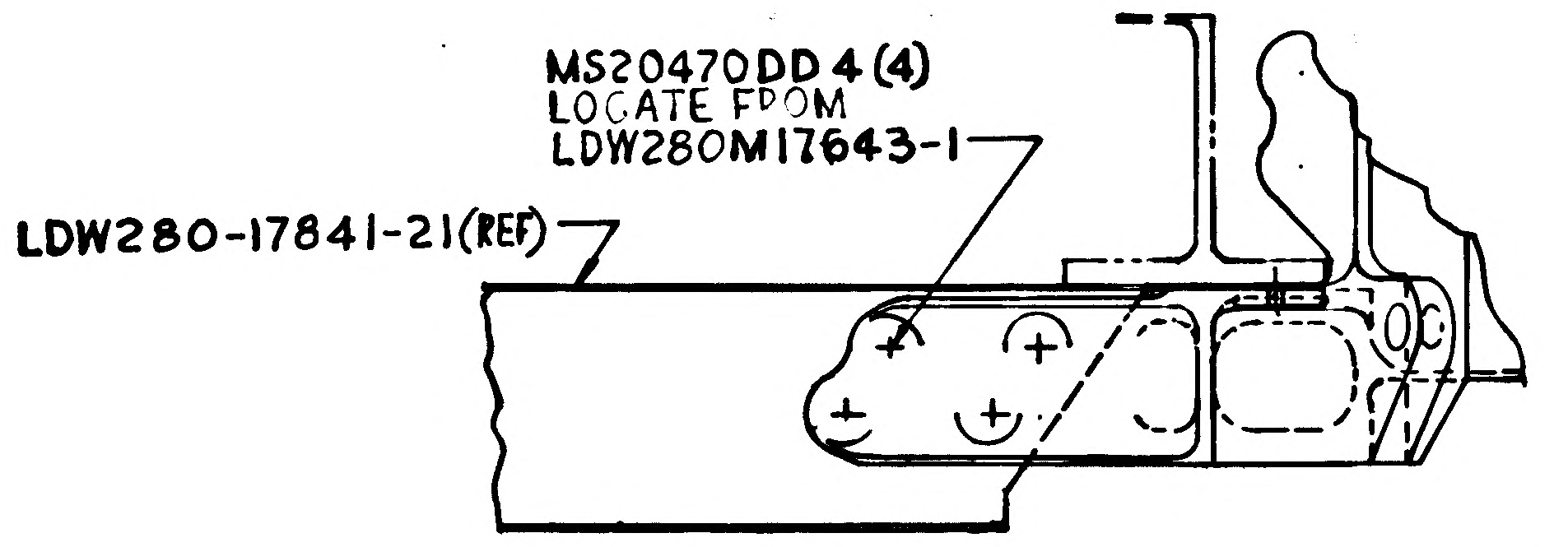
MS20470DD4(4)
LOCATE FROM
LDW280M17643-1
LDW280-17841-21(REF)

SECT. P-P ZONE 3B SH.3

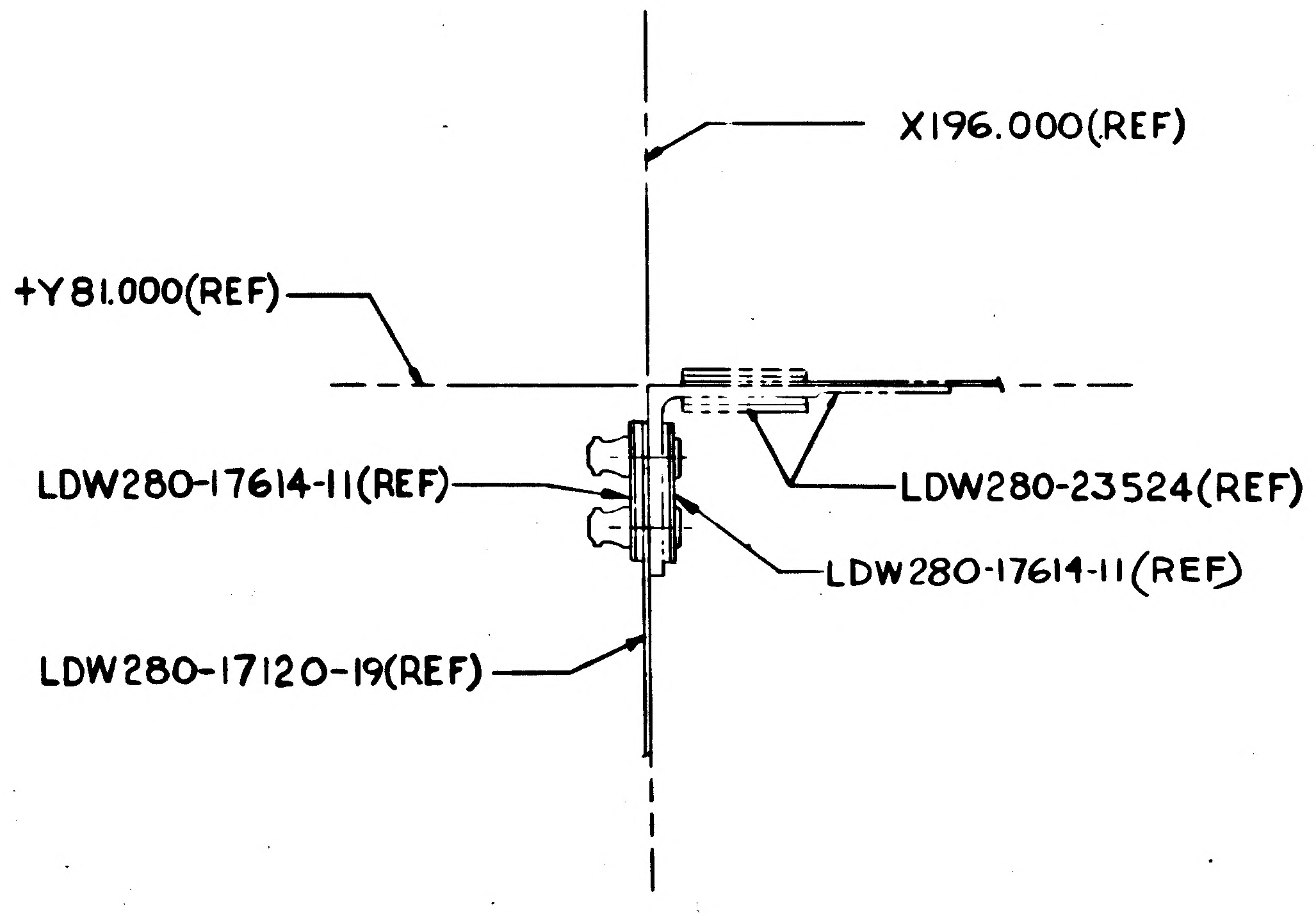
X196.000(REF)
+Y81.000(REF)
LDW280-17614-11(REF)
LDW280-23524(REF)
LDW280-17614-11(REF)
LDW280-17120-19(REF)

SECTION D-D
(ZONE 8F SH 4)

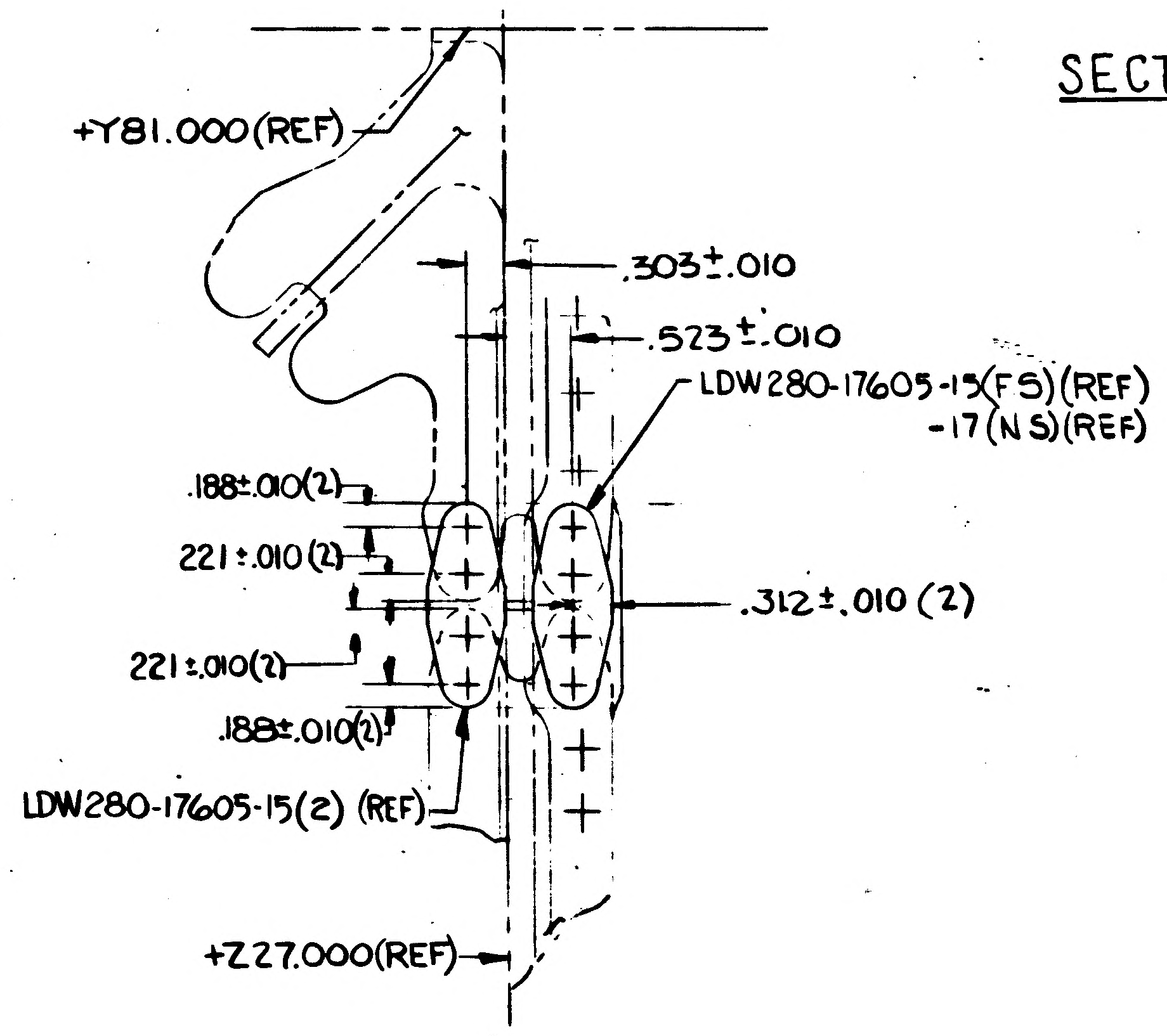
+Y81.000(REF)
.303±.010
.523±.010
LDW280-17605-15(FS)(REF)
-17(NS)(REF)
.188±.010(2)
221±.010(2)
.312±.010 (2)
221±.010(2)
.188±.010(2)
LDW280-17605-15(2) (REF)
+Z27.000(REF)

DETAIL K (ZONE 9F SH4)

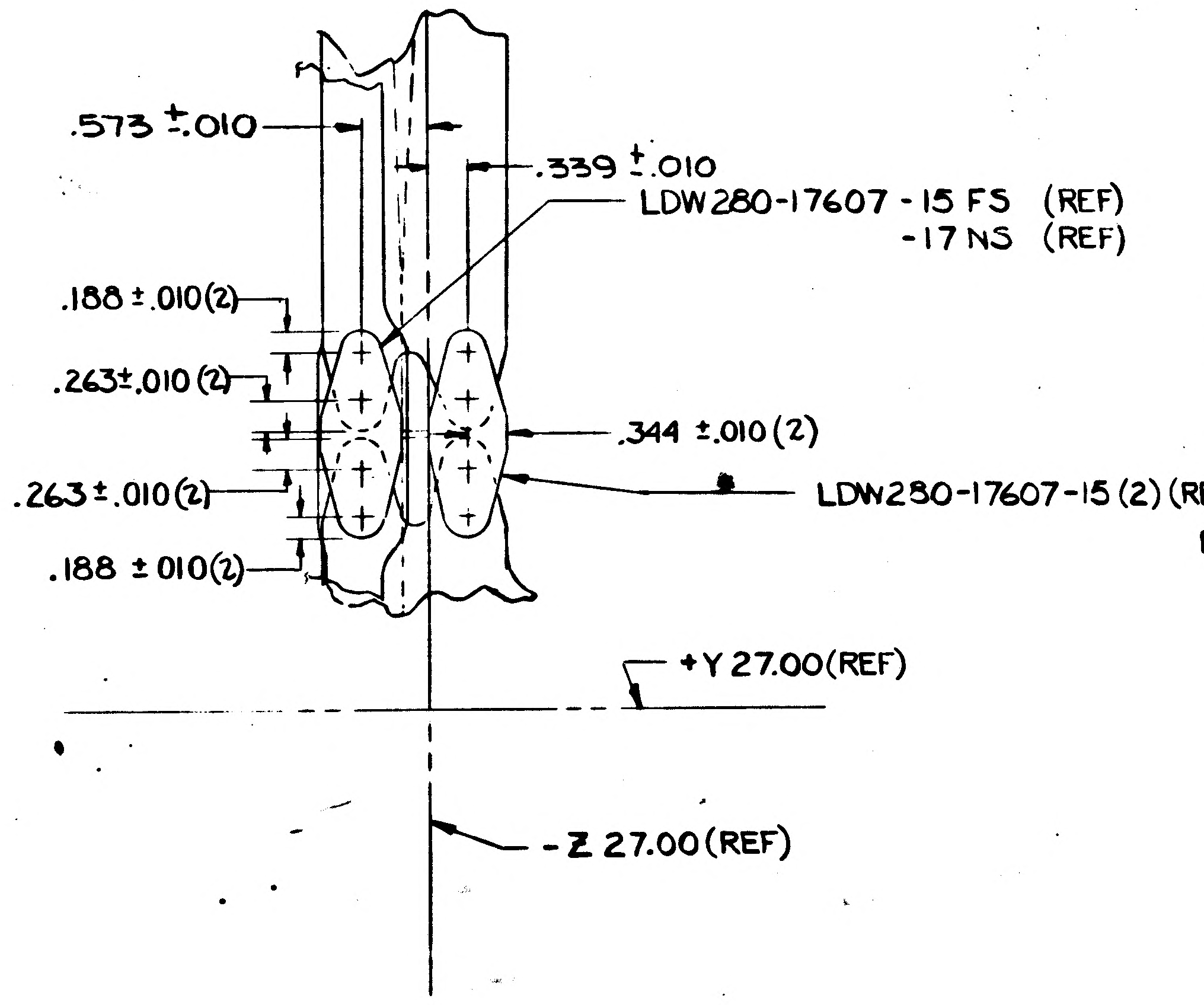
.573±.010
.339±.010
LDW280-17607-15 FS (REF)
-17 NS (REF)
.188±.010(2)
.263±.010(2)
.344 ±.010(2)
.263±.010(2)
LDW280-17607-15(2)(REF)
.188±.010(2)
+Y 27.00(REF)
-Z 27.00(REF)

DETAIL N (ZONE 3A SH3)

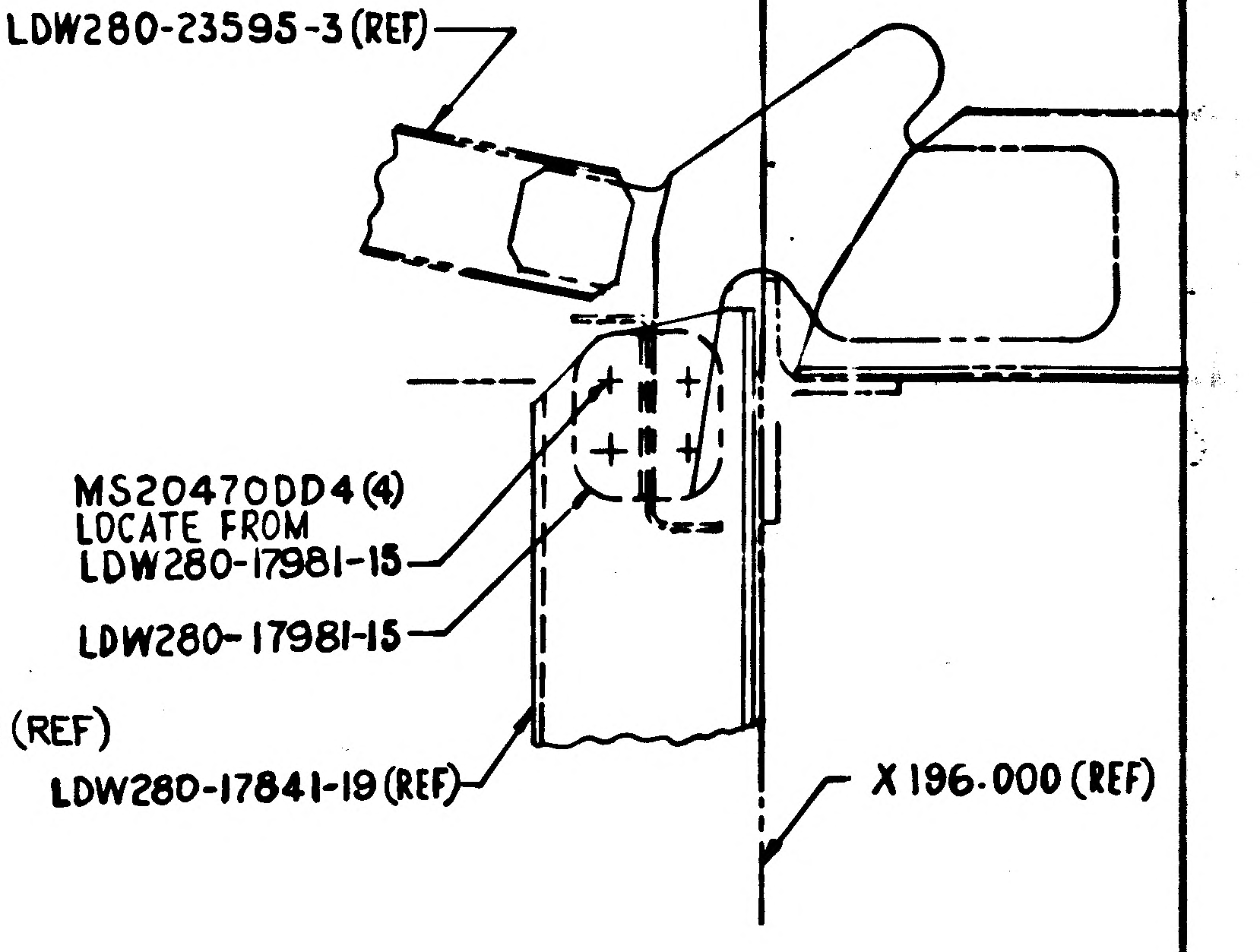
LDW280-23595-3(REF)
MS20470DD4(4)
LOCATE FROM
LDW280-17981-15
LDW280-17981-15
LDW280-17841-19(REF)
X 196.000(REF)

CODE IDENT NO.26512
LDW280-52520 SH 5

02/03 NAS 9-1100

CODE IDENT NO.26512
LDW280-52520 SH 5

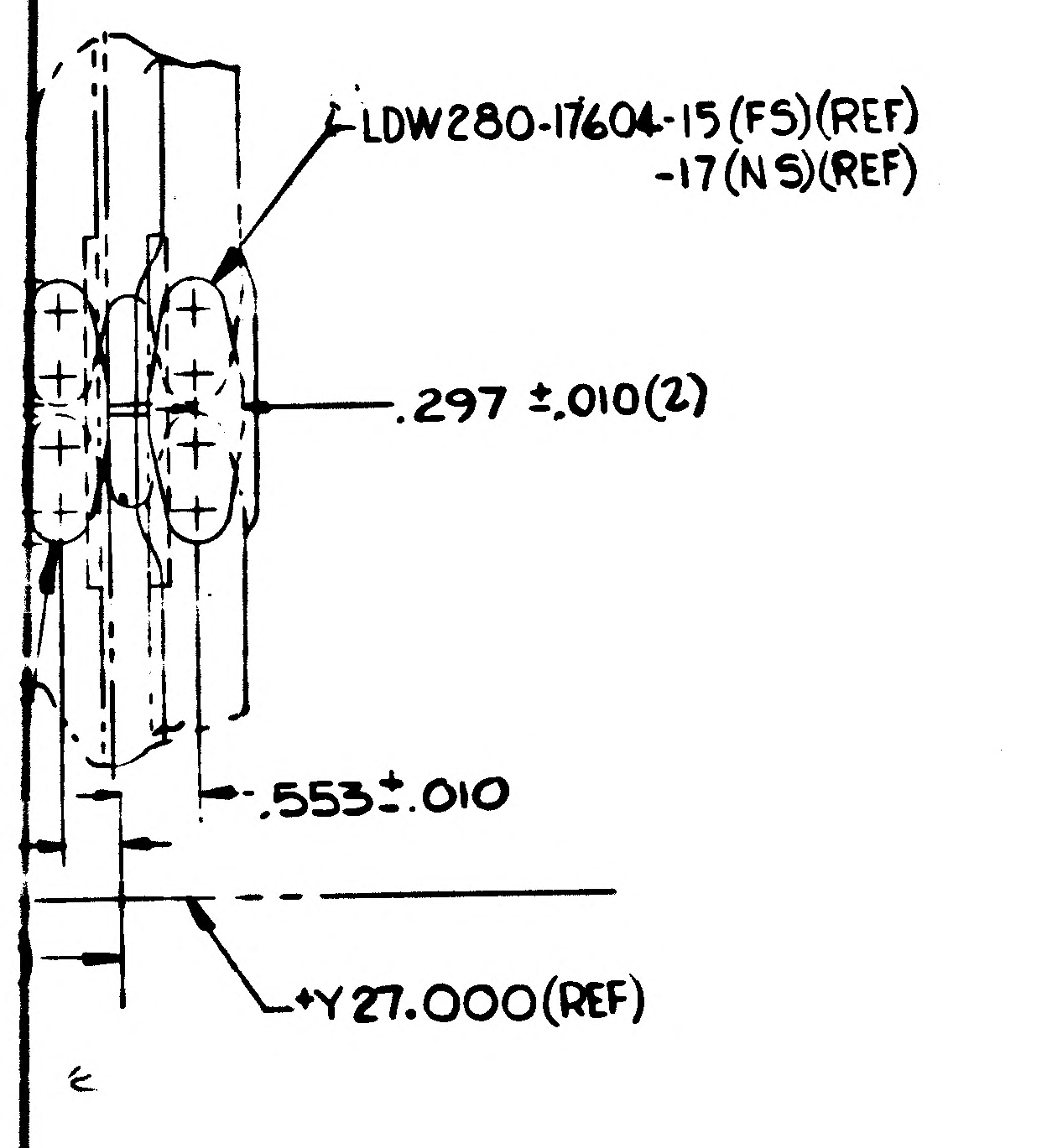

LDW280-17604-15 (FS)(REF)
-17 (NS)(REF)
.297 ±.010(2)
.553±.010
+Y 27.000(REF)

(ZONE 9A SH3)

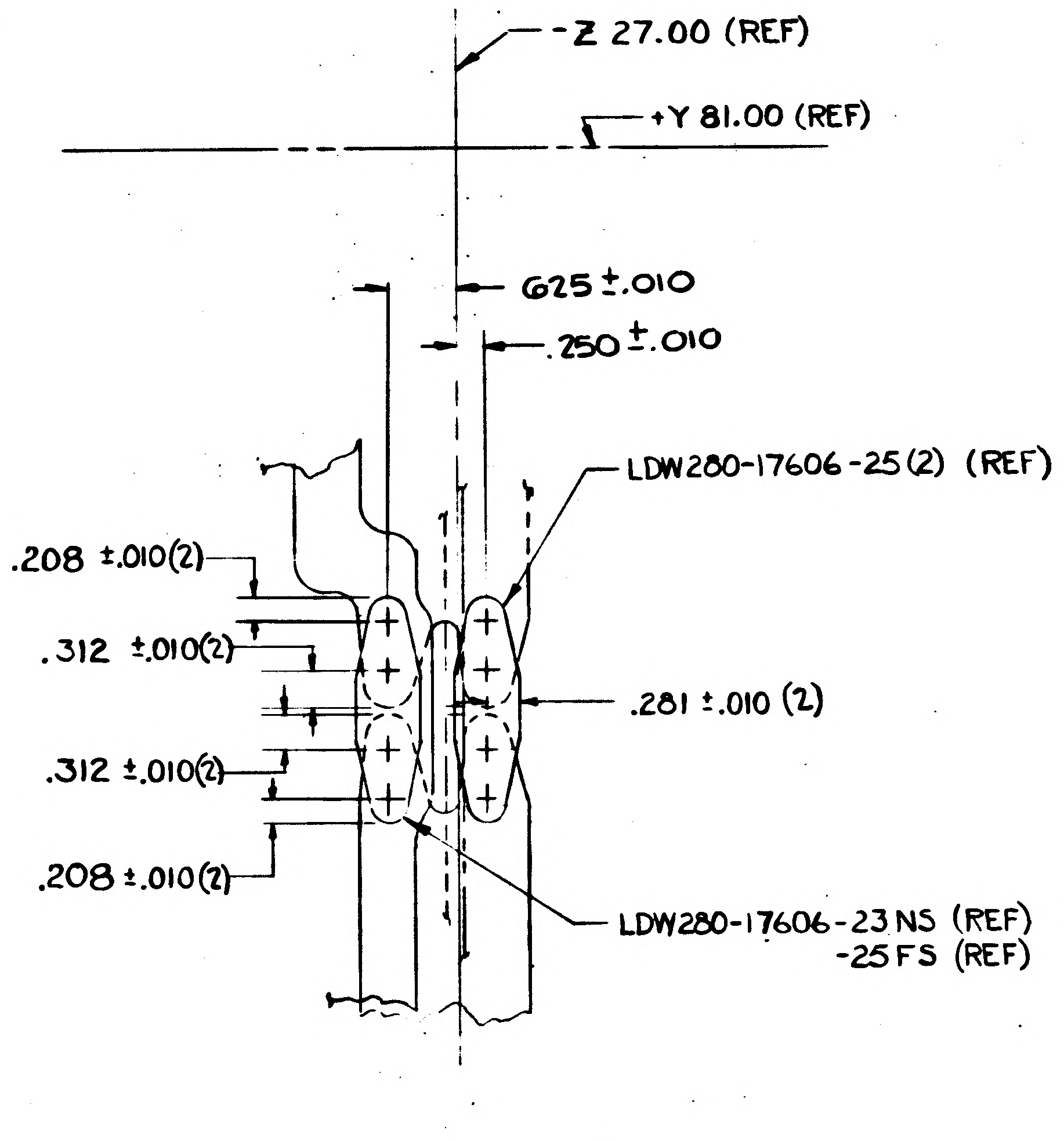

-Z 27.00 (REF)
+Y 81.00 (REF)
.625±.010
.250±.010
LDW280-17606-25(2) (REF)
.208 ±.010(2)
.312 ±.010(2)
.312 ±.010(2)
.208 ±.010(2)
.281 ±.010 (2)
LDW280-17606-23 NS (REF)
-25 FS (REF)

DETAIL M (ZONE 3F SH 4)

- Z OUT

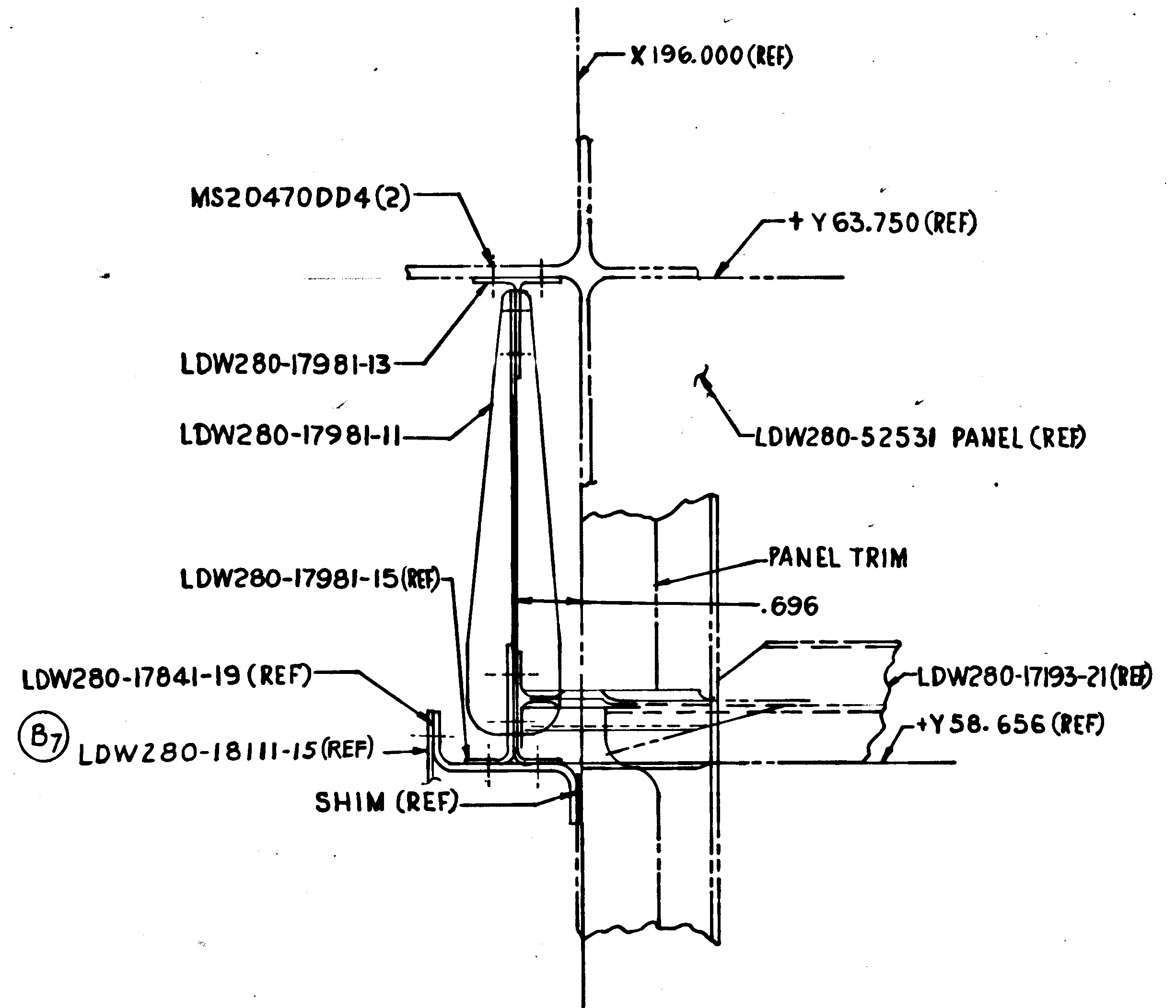

X 196.000 (REF)
MS20470DD4(2)
+Y 63.750 (REF)
LDW280-17981-13
LDW280-17981-11
LDW280-52531 PANEL (REF)
LDW280-17981-15(REF)
PANEL TRIM
.696
LDW280-17841-19 (REF)
LDW280-17193-21(REF)
+Y58.656 (REF)
B7
LDW280-18111-15(REF)
SHIM (REF)

SECTION R-R ZONE 3D SH. 4

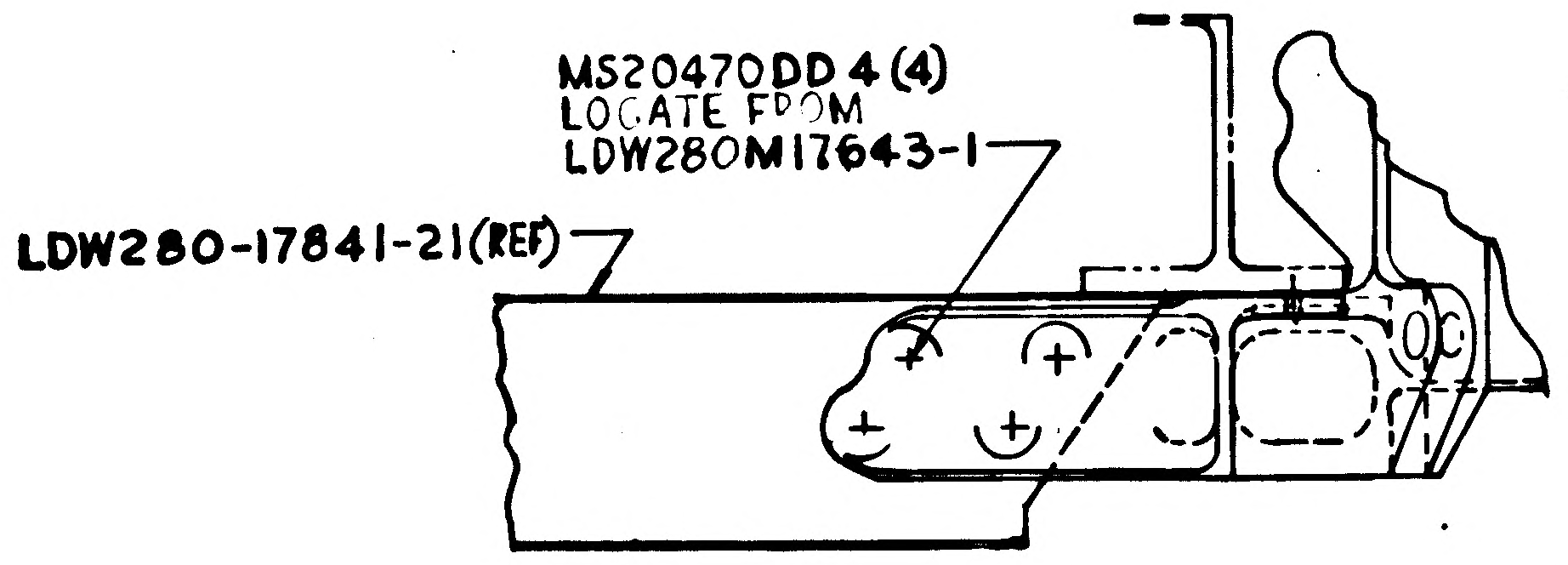

MS20470DD4(4)
LOCATE FROM
LDW280M17643-1
LDW280-17841-21(REF)

SECT. P-P ZONE 3B SH.3

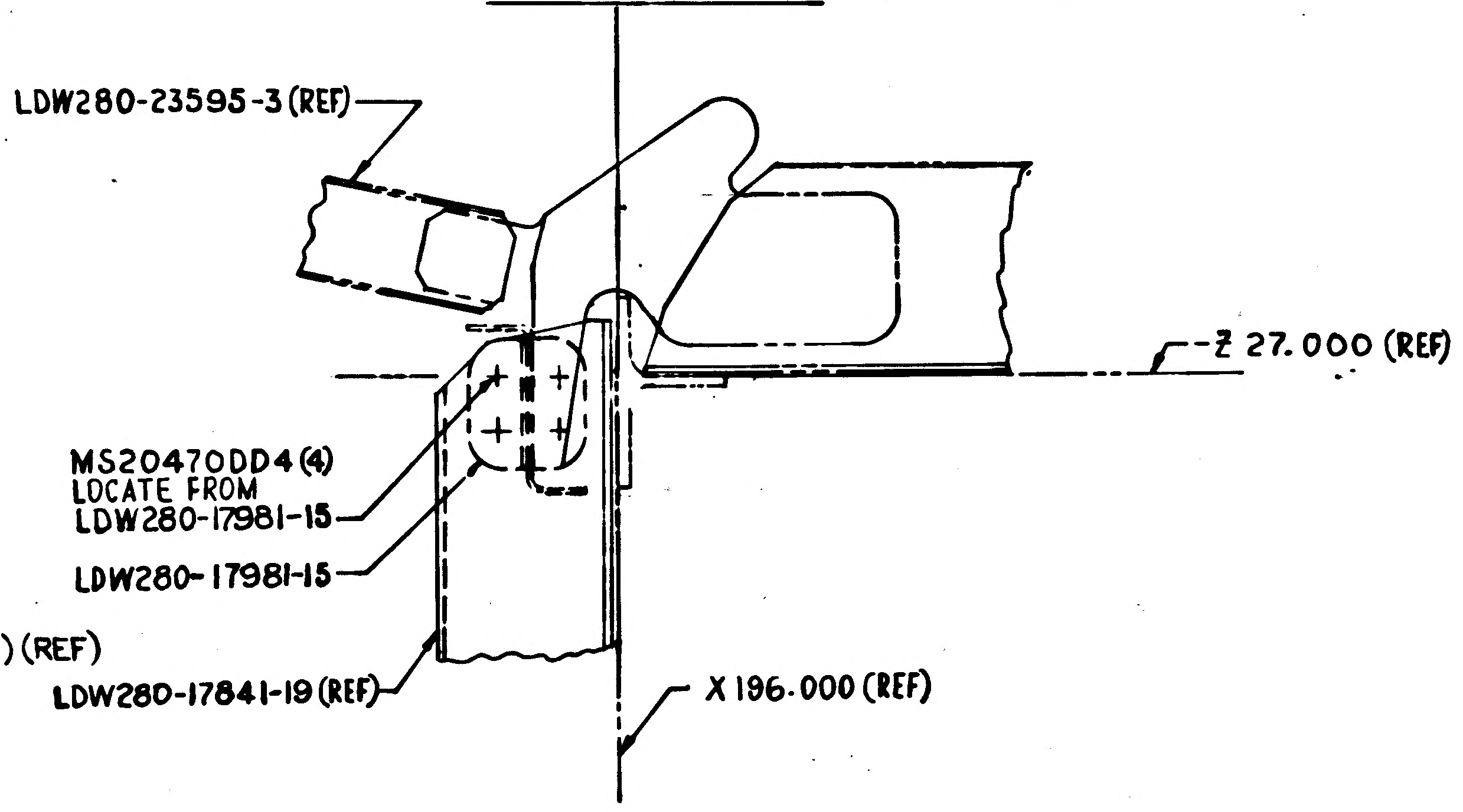

LDW280-23595-3 (REF)
-Z 27.000 (REF)
MS20470DD4(4)
LOCATE FROM
LDW280-17981-15
LDW280-17981-15
LDW280-17841-19(REF)
X 196.000 (REF)

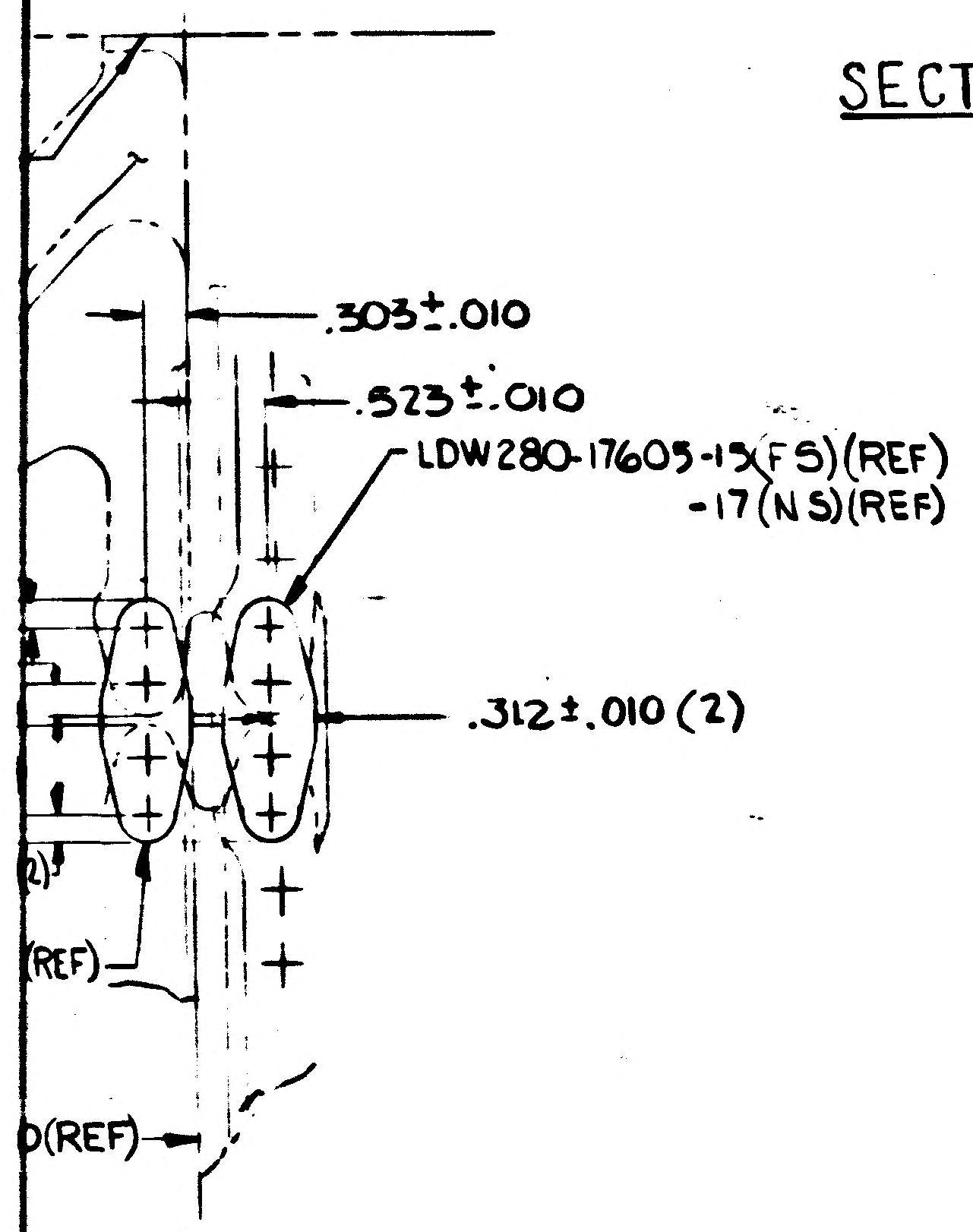

.303±.010
.523±.010
LDW280-17605-15(FS)(REF)
-17(NS)(REF)
.312±.010 (2)
(REF)
(REF)

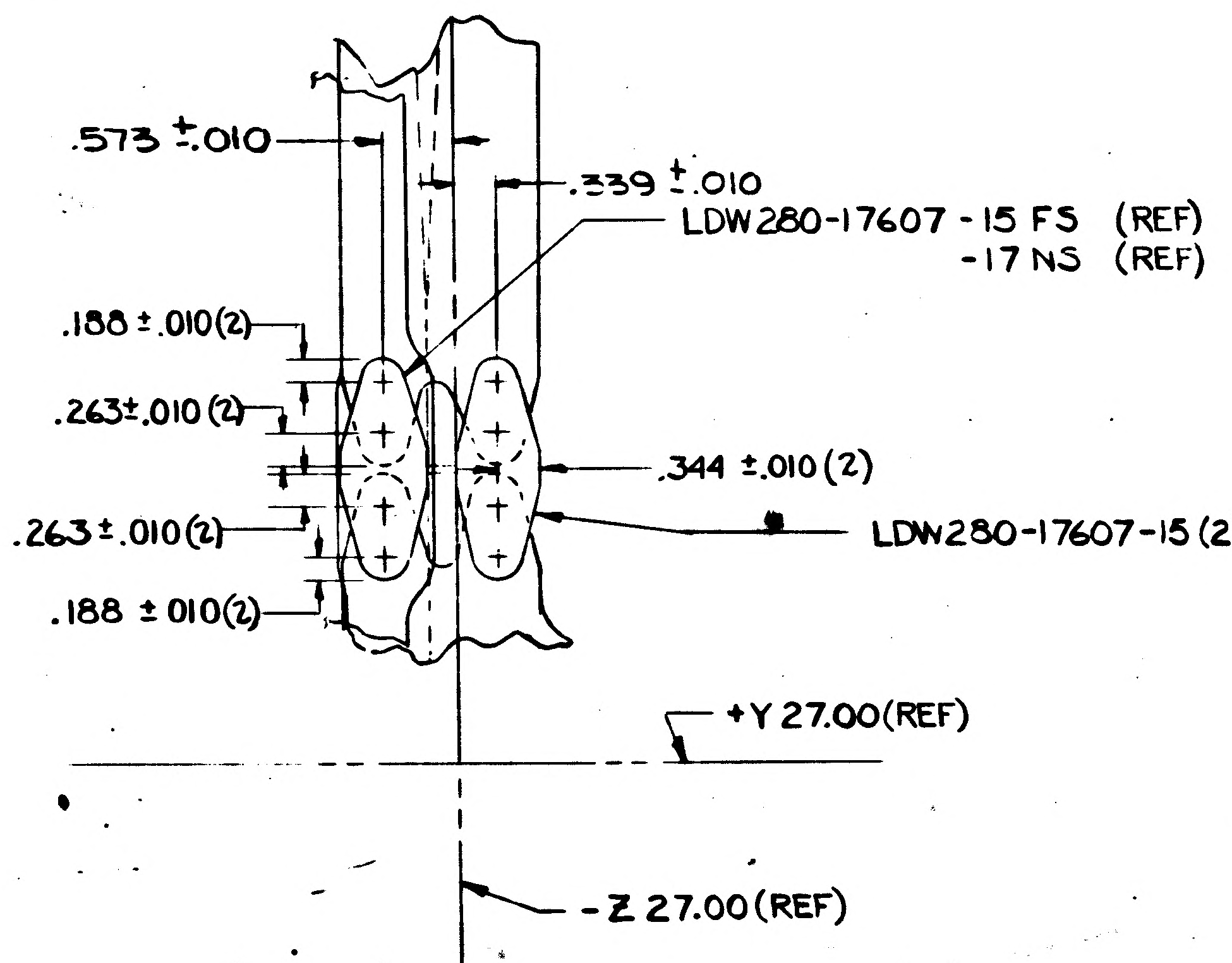

.573 ±.010
.339 ±.010
LDW280-17607-15 FS (REF)
-17 NS (REF)
.188 ±.010(2)
.263±.010 (2)
.344 ±.010 (2)
LDW280-17607-15 (2) (REF)
.263±.010(2)
.188 ±.010(2)
+Y 27.00(REF)
-Z 27.00(REF)

IL K (ZONE 9F SH4)

DETAIL N (ZONE 3A SH3)

- Z IN

03/03

NAS 9-1100

MANUFACTURING OPERATIONS UNLESS OTHERWISE SPECIFIED NOTES CHECKED ✓ APPLY TO THIS DWG.
PART NUMBER AND ALL OTHER MARKINGS IN REGION MARKED ☒ USE BOTH SIDES IF NECESSARY.
FILLET AND INSIDE CORNER RADII TOLERANCES .016R TO .062R ± .010 .063R TO .250R ± .015 OVER .250R ± .030
DEPTH SHOWN FOR TAPPED HOLES IS FULL THDS. 2-3 IMP. THDS. BEYOND PERMISSIBLE
EXTERNAL THREAD LENGTH SHOWN INCLUDES 2 IMPERFECT THREADS MAX.
DO NOT CADMIUM PLATE & PAINT HOLES OR SURFACES MARKED WITH DOUBLE ASTERISK.
MISMATCH STEP OF ± .005 PERMISSIBLE DUE TO CHANGE OF CUTTERS AT INSIDE INTERSECTING SURFACES.
DIAMETERS MARKED MUST BE CONCENTRIC WITHIN FULL INDICATOR READING.
HOLES MUST BE KEPT FREE OF CHROME PLATING SOLUTION.
ALL DIMENSIONS SHOWN TO BE MET AFTER CADMIUM PLATING. THICKNESS OF PLATE .0003 MIN TO .0005 MAX. MIN THICKNESS TO BE .0002 ON THREADED AREAS. NO ALLOWANCES FOR PLATING IN HOLES
125√ SURFACE ROUGHNESS INCLUDING REAMED HOLES PER MIL STD 10
200√ FOR ALL DRILLED HOLES
REMOVE ALL BURRS. BREAK ALL EDGES .015-.031
INSPECTION INFORMATION MINIMUM PERMISSIBLE AVERAGE EDGE DISTANCE MARKED IS
SYMBOL √ DENOTES SURFACE TO BE MACHINED
UNLESS OTHERWISE SPECIFIED TOLERANCE ON FLANGES IS ± 1/32
LENGTHS OF AN, NAS & MS AL ALY RIVETS SHORTER THAN 1 INCH ARE NOT SPECIFIED
TOLERANCE ON LOFTED DELINEATIONS IS

DWG SIZE 34x 106

PRINTING INFO ONLY

FULL SIZE SHEET AREA (36x108) = 27 SQ. FT.
½ SIZE SHEET AREA (¼ OF FULL) = 6.75 SQ. FT.

PRINT TRIM LINE

C

B

A

LDW280-52520 B

LDW280-52520 B

CODE IDENT NO. 26512	
LDW280 -52520	SH 5

	GRUMMAN AIRCRAFT ENGRG CORP, BETHPAGE, L. I., NEW YORK			
LM	SIZE J	CODE IDENT NO. 26512	LDW280-52520	B
MODEL OR END ITEM	SCALE FULL		SHEET 5.00	

NOT FOR PHOTO REPRODUCTION

THIS IS AN ORIGINAL DWG 3 FRAMES

ENG 73-7 6-64

HG
ENG 32.1 REV 3-65

*

GRUMMAN AIRCRAFT ENGINEERING CORP.
CODE IDENT NO. 26512
ENGINEERING ORDER

DWG. NO. LDW280-52520		EO NO. B1
CONTROL INFO NO. LM-2-2926		

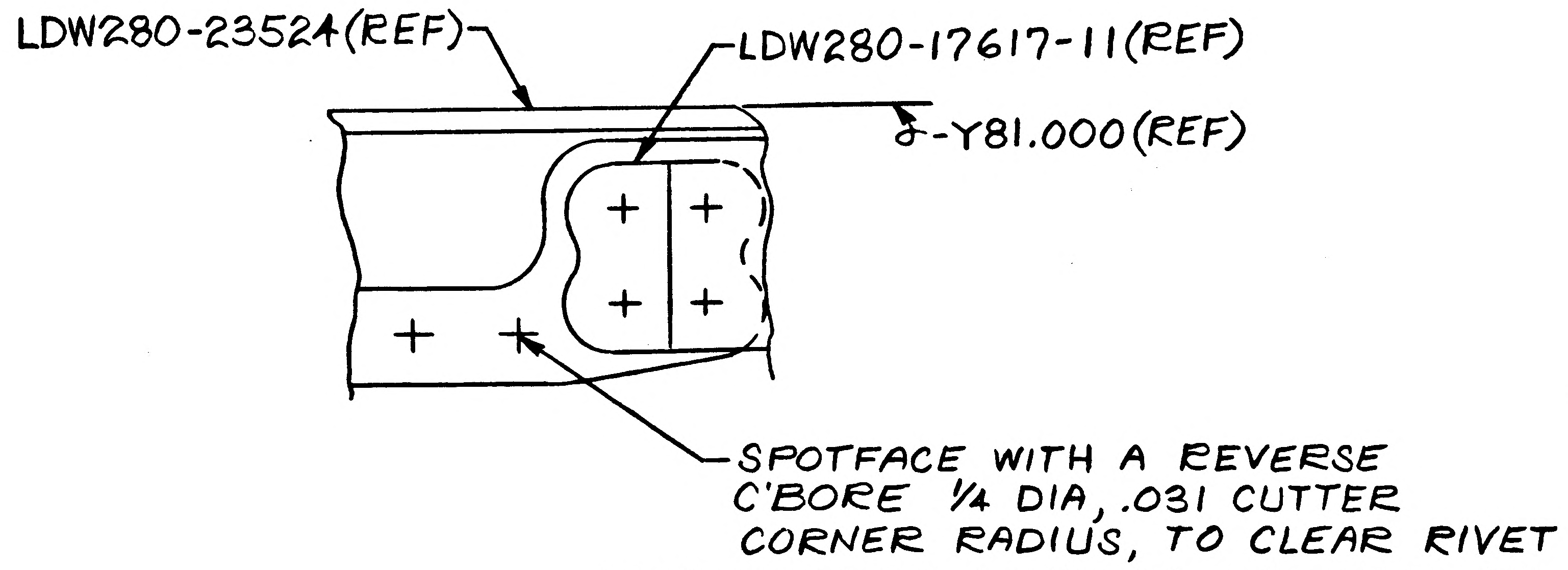

LDW280-23524(REF)
LDW280-17617-11(REF)
-Y81.000(REF)
SPOTFACE WITH A REVERSE C'BORE 1/4 DIA, .031 CUTTER CORNER RADIUS, TO CLEAR RIVET

NOTE: MAINTAIN MINIMUM THICKNESS OF ADJACENT MACHINED LAND

ZONE 4F, SHEET 4.00 (REF)

SHOP NOTE:
FIN #76 AFTER SPOTFACING

DETAIL SPEC REQ		CL II ENGRG CHG		CL I ENGRG CHG		2

REASON FOR EO	DESCRIPTION OF EO	② GAEC C EO RELEASE
RIVET TAIL RIDING MACHINE STEP	FOR -1 INSTL, IN FLD ADDED RIVET SPOTFACE ON LDW280-23524	FR

MODEL	EFFECTIVITY		
	PROCURING ACTIVITY NO.	GAEC UNIT NO.	SUB CONTR UNIT NO.
LM		LM-2(32) THRU LM-15(45)	

DRAWING CHANGE REQD		DISPOSITION OF PARTS		APPROVED BY	JAS					Ctf	RMS	
✓		✓		DATE	11/15				10/24/66	10/24/66	10-25-66	10 24 66
REVISE DWG	RECORD EO	REWORK	SCRAP	10/21/66	VDI	SUPPORT	RELIAB. GROUP	GROUP LEADER	STRESS GROUP	LIAISON ENGRG	PROJ ENGRG	~~GOVT~~

PRIORITY	DRAWING TITLE	DRAWING NO.	EO NO.
C	DECK INSTALLATION DESCENT STAGE ~ R.H. UPPER DECK	LDW280-52520	B1

ISSUED BY LIAISON J. MALONEY X3604
SECTION V.D.I.
GROUP NO. 335
PL 35
EMF

01 NAS 9-1100

ENG 32.1 REV 3-65

GRUMMAN AIRCRAFT ENGINEERING CORP.
CODE IDENT NO. 26512
ENGINEERING ORDER

DWG NO. LDW280-52520
EO NO. BV
CONTROL INFO NO. LDW280A3229

ON LDW280-52520-1 ADD "SEE NOTE *" IN PROCESS SYM. BLOCK.

NOTE # * (USE NEXT AVAILABLE NOTE NO.)

*- ADD PATCHES PER LPC 280-17.

DETAIL SPEC REQ	☐	CL II ENGRG CHG	☐	CL I ENGRG CHG	☐	2

REASON FOR EO: ADDITIONAL STRENGTH REQMTS (LCR 554)

DESCRIPTION OF EO: ADDED SEE NOTE * TO PROCESS SYM BLOCK & NOTE # *.

Ⓡ GAEC EO RELEASE: FR 11/10/66

MODEL	PROCURING ACTIVITY NO.	GAEC UNIT NO.	SUB CONTR UNIT NO.
LM		LM-2 (32)	
LM		THRU	
LM		LM-15 (45)	

DRAWING CHANGE REQD		DISPOSITION OF PARTS	
REVISE DWG	RECORD EO	REWORK	SCRAP
✓		✓	

	V.D.I.	SUPPORT	RELIAB. GROUP	GROUP LEADER	STRESS GROUP	LIAISON ENGRG	PROJ ENGRG	~~GOVT~~
APPROVED BY	JJS				WJH		RMC	[illegible]
DATE	11/[illegible]/66				11/10/66		11-10-66	11-10-66
1								

PRIORITY: C

DRAWING TITLE: DECK INST'L ~ D.S. R.H. UPPER

DRAWING NO. LDW280-52520

EO NO. BV

ISSUED BY G. HANSMANN X1153 SECTION V.D.I. GROUP NO. 280 PL 35

01 NAS 9-1100

A.G.

ENG 32.1 REV 3-65

GRUMMAN AIRCRAFT ENGINEERING CORP.

CODE IDENT NO. 26512

ENGINEERING ORDER EMF A

DWG. NO. LDW280-52520		EO NO. B3	
CONTROL INFO NO.	LM-2-3135		

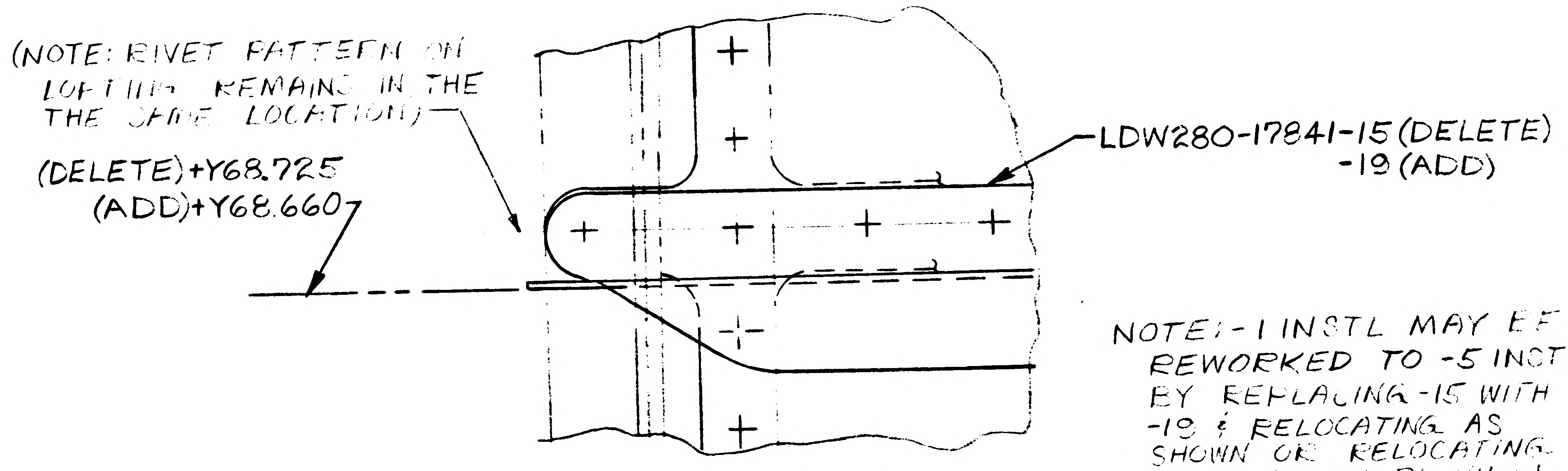
(NOTE: RIVET PATTERN ON LOFTING REMAINS IN THE THE SAME LOCATION)
(DELETE)+Y68.725
(ADD)+Y68.660
LDW280-17841-15 (DELETE)
-19 (ADD)

(SHEET 4.00 ZONE 9E)

NOTE: -1 INSTL MAY BE REWORKED TO -5 INSTL BY REPLACING -15 WITH -19 & RELOCATING AS SHOWN OR RELOCATING -15 AS SHOWN PROVIDED MIN EDGE DISTANCE IS MAINTAINED

IN FLD/DWG, B/M & MOD/BLK, ADD -5 INSTL:
-5 INSTL REPLACES & IS IDENTICAL TO -1, EXCEPT -7 ASSY REPLACES -3
-7 ASSY IS IDENTICAL TO -3, EXCEPT LDW280-17841-19 REPLACES
LDW280-17841-15 & LOCATION +Y68.725 SHOULD BE +Y68.660
IN MOD/BLK, FOR -1, DELETE LM-4(34) THRU LM-15(45) EFFECTIVITY

DETAIL SPEC REQ		CL II ENGRG CHG		CL I ENGRG CHG	

REASON FOR EO	DESCRIPTION OF EO
MISALIGNMENT BETWEEN ZEE & ATTACHING SUPPORT MEMBER FOR ELECT REPLACEMENT ASSY	IN FLD/DWG, B/M & MOD/BLK ADDED -5 INSTL IN MOD/BLK, FOR -1 INSTL, DELETED LM-4(34) THRU LM-15(45) EFFECTIVITY

2

Ⓡ GAEC C EO RELEASE

02925

MODEL	EFFECTIVITY		
	PROCURING ACTIVITY NO.	GAEC UNIT NO.	SUB CONTR UNIT NO.
LM		LM-4(34) THRU	
		LM-15(45)	

DRAWING CHANGE REQD		DISPOSITION OF PARTS		APPROVED BY	JKB				CWW	CWW	RMC Ⓔ	
✓		✓		DATE	1/25				12/29/66	12/28/66	1-4-67	
REVISE DWG	RECORD EO	REWORK	SCRAP	-1-	VDI	SUPPORT	RELIAB. GROUP	GROUP LEADER	STRESS GROUP	LIAISON ENGRG	PROJ ENGRG	~~GOVT~~

PRIORITY	DRAWING TITLE	DRAWING NO.	EO NO.
C	DECK INSTALLATION DESCENT STAGE ~ R. H. UPPER	LDW280-52520	B3

ISSUED BY LIAISON J. MALONEY 12/17/66 X3604 SECTION V.D.I. GROUP NO. 335 PL 35

01 NAS 9-1100

H.G.
ENG 32.1 REV 3-65

GRUMMAN AIRCRAFT ENGINEERING CORP.
CODE IDENT NO. 26512
ENGINEERING ORDER EMF-A

DWG. NO. LDW280-52520 EO NO. B4
CONTROL INFO NO. LM-2-3176

THIS IS A REVISION OF EO-B3

"-7 ASSY IS IDENTICAL TO -3, EXCEPT
LDW280-17841-19 REPLACES LDW280-17841-15 & ..."
SHOULD BE
"-7 ASSY IS IDENTICAL TO -3, EXCEPT
LDW280-17841-23 REPLACE LDW280-17841-15 & ..."

2

DETAIL SPEC REQ ☐ CL II ENGRG CHG ☐ CL I ENGRG CHG ☐

REASON FOR EO
① MISALIGNMENT BETWEEN MEMBERS
② DETAIL PART NUMBER PREVIOUSLY USED

DESCRIPTION OF EO
REFERENCE EO-B3
IN FLD & B/M, FOR -7 ASSY
LDW280-17841-23 WAS LDW280-17841-19

GAEC EO RELEASE: [illegible] LE 02131

MODEL	EFFECTIVITY PROCURING ACTIVITY NO.	GAEC UNIT NO.	SUB CONTR UNIT NO.
LM		LM-4(34)	
		THRU	
		LM-15(45)	

DRAWING CHANGE REQD REVISE DWG	RECORD EO	DISPOSITION OF PARTS REWORK	SCRAP
✓		✓	

	VDI	SUPPORT	RELIAB. GROUP	GROUP LEADER	STRESS GROUP	LIAISON ENGRG	PROJ ENGRG	~~GOVT~~
APPROVED BY	J[illegible]				caw	caw	[illegible]	[illegible]
DATE	1/25				1/4/67	1/4/67	[illegible]	1/4/67
-1-								

PRIORITY	DRAWING TITLE	DRAWING NO.	EO NO.
C	DECK INSTALLATION DESCENT STAGE ~ R.H. UPPER	LDW280-52520	B4

ISSUED BY LIAISON J. MALONEY 1/4/67 X3604 SECTION V.D.I. GROUP NO. 335 PL 35

01 NAS 9-1100

H.G.
ENG 32.1 REV 3-65

GRUMMAN AIRCRAFT ENGINEERING CORP.
CODE IDENT NO. 26512
ENGINEERING ORDER

DWG. NO. LDW280-52520
EO NO. B5
CONTROL INFO NO. LM-2-3193

FOR -3 ASSY
IN FLD/DWG & B/M
REPLACE LDW280-17330-40 WITH LDW280-17330-32

SHOP
(NOTE: -32 IS IDENTICAL TO -40. ONLY REWORK REQUIRED
IS PART REIDENTIFICATION)

2

DETAIL SPEC REQ ☐ CL II ENGRG CHG ☐ CL I ENGRG CHG ☐

REASON FOR EO	DESCRIPTION OF EO	GAEC EO RELEASE
PART CALLOUTS DISAGREE WITH DETAIL DRAWING	FOR -3, IN FLD & B/M LDW280-17330-32 WAS LDW-17330-40	C 02025

MODEL	PROCURING ACTIVITY NO.	GAEC UNIT NO.	SUB CONTR UNIT NO.
LM		LM-2(32)	
		THRU	
		LM-15(45)	

DRAWING CHANGE REQD: REVISE DWG	RECORD EO	DISPOSITION OF PARTS: REWORK	SCRAP
✓		✓	

		SUPPORT	RELIAB. GROUP	GROUP LEADER	STRESS GROUP	LIAISON ENGRG	PROJ ENGRG
APPROVED BY						Ctf	RHC (EJ)
DATE	1/25				1/7/67	1/7/67	1-11-67
-/-	VDI						

PRIORITY	DRAWING TITLE	DRAWING NO.	EO NO.
C	DECK INSTALLATION DESCENT STAGE ~ R.H. UPPER	LDW280-52520	B5

ISSUED BY LIAISON J. MALONEY 1/7/67 X3604 SECTION V.D.I. GROUP NO. 335 PL 35

01

NAS 9-1100

ENG 32.1 REV 3-65 46

GRUMMAN AIRCRAFT ENGINEERING CORP.
CODE IDENT NO. 26512
ENGINEERING ORDER

DWG. NO.	LDW280-525	EO NO.	B6
CONTROL INFO NO.	LM-2-3228		

THIS IS A REVISION OF EO-B5

"FOR -3 ASSY" SHOULD BE "FOR -3 & -7 ASSY'S"

DETAIL SPEC REQ		CL II ENGRG CHG		CL I ENGRG CHG	

REASON FOR EO
① PART CALLOUTS DISAGREE WITH DETAIL DRAWING
② INCOMPLETE ASSY CALLOUT

DESCRIPTION OF EO
REFERENCE EO-B5
"FOR -3 & -7 ASSY'S" WAS "FOR -3 ASSY"

GAEC EO RELEASE C

MODEL	PROCURING ACTIVITY NO.	GAEC UNIT NO.	SUB CONTR UNIT NO.
LM		LM-2(32)	
		THRU	
		LM-15(45)	

DRAWING CHANGE REQD: REVISE DWG	RECORD EO	DISPOSITION OF PARTS: REWORK	SCRAP
✓		✓	

APPROVED BY								
DATE	1/25				1/16/67	1/16/67	1/17	
-1-	VDI	SUPPORT	RELIAB. GROUP	GROUP LEADER	STRESS GROUP	LIAISON ENGRG	PROJ ENGRG	GOVT

PRIORITY	DRAWING TITLE	DRAWING NO.	EO NO.
C	DECK INSTALLATION DESCENT STAGE ~ R.H. UPPER	LDW280-52520	B6

ISSUED BY LIAISON J. MALONEY 1/16/67 X3604 SECTION V.D.I. GROUP NO.______ PL_____

01 NAS 9-1100

B **RELEASED BY LIAISON**

ENG 32.1 REV 3-65

GRUMMAN AIRCRAFT ENGINEERING CORP.
CODE IDENT NO. 26512
ENGINEERING ORDER

EMF A

DWG. NO. LDW280-52520		EO NO. B7	
CONTROL INFO NO. LM 5-11915			

ON -1, -3 & -5

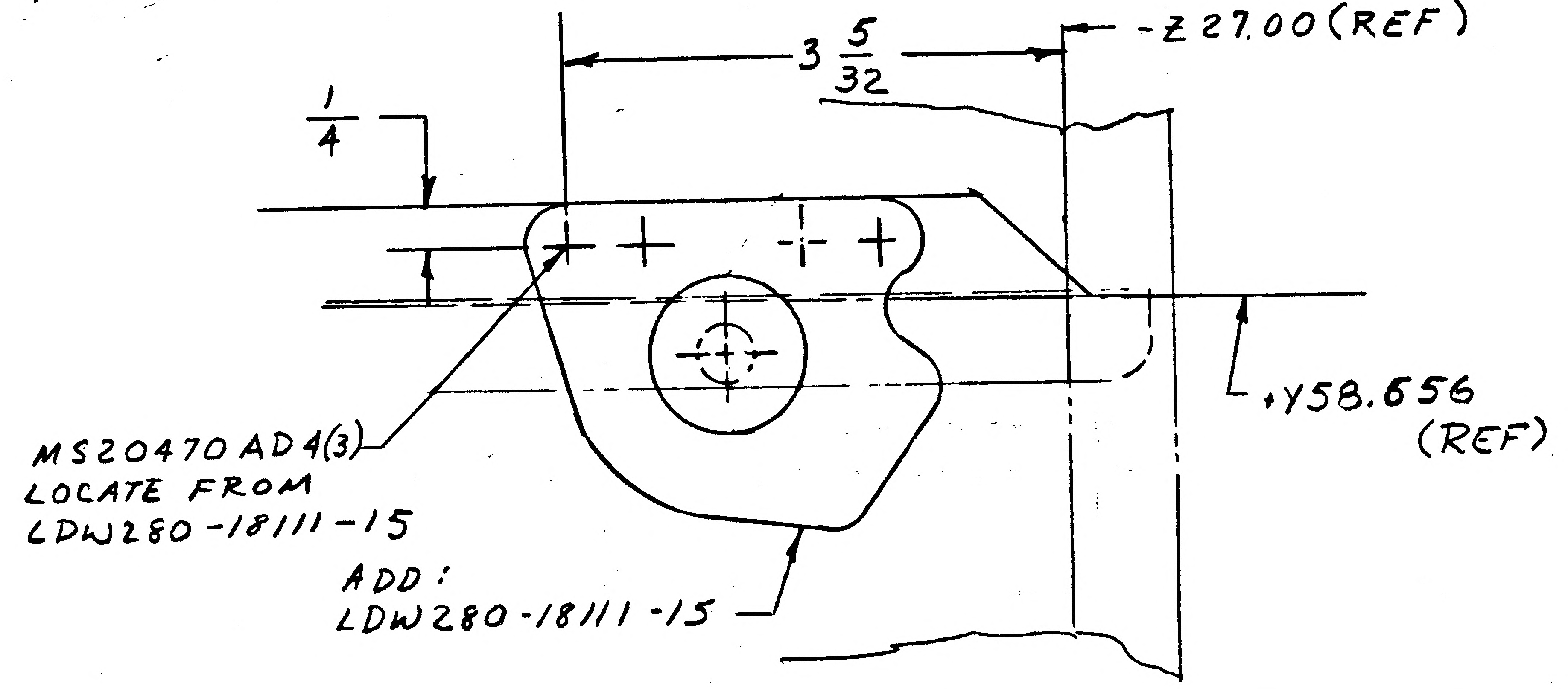

5

DETAIL SPEC REQ		CL II ENGRG CHG		CL I ENGRG CHG	

REASON FOR EO	DESCRIPTION OF EO	GAEC EO RELEASE C
TO FACILITATE INSTL OF BLANKET STRAPS	ON -1, -3 & 5 ADDED LDW280-18111-15 & MS20470AD4(3)	JK

MODEL	EFFECTIVITY: PROCURING ACTIVITY NO.	EFFECTIVITY: GAEC UNIT NO.	EFFECTIVITY: SUB CONTR UNIT NO.
LM		LM2 (32) THRU	15 (45)

DRAWING CHANGE REQD: REVISE DWG	DRAWING CHANGE REQD: RECORD EO	DISPOSITION OF PARTS: REWORK	DISPOSITION OF PARTS: SCRAP	APPROVED BY	WT			~		CH		
✓		✓		DATE	2/27/67			~	3-1-67	2-27-67	3-8-67	3-1-67
				1	VD1	SUPPORT	RELIAB. GROUP	GROUP LEADER	STRESS GROUP	LIAISON ENGRG	PROJ ENGRG	~~GOVT~~

PRIORITY	DRAWING TITLE	DRAWING NO.	EO NO.
C	DECK INSTL D/S - R.H UPPER DECK	LDW280-52520	B7

ISSUED BY Don Ragas X6510 SECTION VD1 GROUP NO. 335 PL 5

01 / NAS 9-1100

C

ENG 32.1 REV 3-65

GRUMMAN AIRCRAFT ENGINEERING CORP.
CODE IDENT NO. 26512
ENGINEERING ORDER

*1

DWG. NO. LDW 280-52520
EO NO. B8
CONTROL INFO NO. LM-5-12558

THIS EO IS A REVISION OF EO B7

ON -1, -3 & -5 S/B ON -1, -3, -5 & -7

RELEASED BY LIAISON

5

DETAIL SPEC REQ	☐	CL II ENGRG CHG	☐	CL I ENGRG CHG	☐

REASON FOR EO	DESCRIPTION OF EO	GAEC EO RELEASE
ADD -7 (OMITTED ON EO B7) RTE 05131-220	REF EO B7 ON -1, -3, -5 & -7 WAS ON -1, -3 & -5	C JK

MODEL	PROCURING ACTIVITY NO.	GAEC UNIT NO.	SUB CONTR UNIT NO.
LM		LM-2 (32)	
		THRU	
		LM-15 (45)	

DRAWING CHANGE REQD		DISPOSITION OF PARTS	
REVISE DWG ✓	RECORD EO	REWORK ✓	SCRAP

APPROVED BY	JHS						CH		
DATE	3/18/67					3-10-67	3-9-67	3-14-67	3/10/67
1	VD1	SUPPORT	RELIAB. GROUP	GROUP LEADER		STRESS GROUP	LIAISON ENGRG	PROJ ENGRG	~~CONT~~

PRIORITY	DRAWING TITLE	DRAWING NO.	EO NO.
C	DECK INSTALLATION D/S R.H. UPPER DECK	LDW 280-52520	B8

ISSUED BY LIAISON A. VENTO X-6216 SECTION VD1 GROUP NO. 335 PL 5

01

NAS 9-1100

B

ENG 32.1 REV 3-65

GRUMMAN AIRCRAFT ENGINEERING CORP.
CODE IDENT NO. 26512 *
ENGINEERING ORDER EMF A

DWG. NO. LDW 280-52520 | EO NO. B9
CONTROL INFO NO. LM-5-12703

THIS EO IS A REVISION OF EO B7 & B8

ON -1, -3, -5 & -7 S/B ON -3 & -7

RELEASED BY LIAISON

DETAIL SPEC REQ	☐	CL II ENGRG CHG	☑	CL I ENGRG CHG	☐

5

REASON FOR EO: NOT REQ'D ON -1 & -5
RTE 05131-220

DESCRIPTION OF EO: REF EO B7 & B8
ON -3 & -7 WAS ON -1, -3, -5 & -7

GAEC EO RELEASE: VK

MODEL	PROCURING ACTIVITY NO.	GAEC UNIT NO.	SUB CONTR UNIT NO.
LM		LM-2 (32)	
		THRU	
		LM-15 (45)	

DRAWING CHANGE REQD: REVISE DWG ✓ | RECORD EO
DISPOSITION OF PARTS: REWORK ✓ | SCRAP

APPROVED BY	Jap			~	DV	CH	RMC		
DATE	7/6/67			~	3/30	3-30	4-3-67	3-30-67	
1	VDI	SUPPORT	RELIAB. GROUP	GROUP LEADER	STRESS GROUP	LIAISON ENGRG	PROJ ENGRG	GOVT	

PRIORITY: C
DRAWING TITLE: DECK INSTALLATION D/S R.H. UPPER DECK
DRAWING NO.: LDW 280-52520
EO NO.: B9

ISSUED BY LIAISON A.VENTO X-6216 SECTION VD1 GROUP NO. 335 PL 5

01 NAS 9-1100

ENG 32.2 REV 3-65

GRUMMAN AIRCRAFT ENGINEERING CORP.
CODE IDENT NO. 26512
ENGINEERING ORDER

DWG. NO. LE0280 | EO NO. 539
CONTROL INFO NO. LDW280A-6137

FOR ALL DASH NO.* ON THE FOLLOWING DWGS WHICH HAVE LM-6 EFF ADD LTA-3D|R EFF QTY & N/A TO REMAIN THE SAME AS ON LM-6

DRAWING	TITLE	CHANGE NO.
LDW280-23521	SEE DWG	B7
-23522		C1
-23523		B7
-23529		B4
-23530		B6
-23532		C5
-23535		B3
-23538		B3
-23539		D3
-23540		C6
-23541		D2
-23542		A10
-23543		B7
-23544		C1
-23550		D2
-23563		B2
-23565		A4
-23569		B4
-23573		B4
-23575		C3
-23576		C3
-23577		B1
-23578		B5
-23579		C1
-23580		A9
-23581		C2
-23586		B6
-23634		B2
-23637		A7
-52520		B10
-52663		B5
-52683		A2
-54510		C4
-54516		B5
-54524		D2
-54525		C5
-54526		C3
-54527		C6
-54528		C3
-54531		D8
-54533		C5
-54534		B7
-54537		D1
-54570		C2
LDW280-54682	SEE DWG	D6

LC019-1242 2

DETAIL SPEC REQ		CL II ENGRG CHG	✓	CL I ENGRG CHG				GAEC EO RELEASE C
REASON FOR EO: FAILURE OF LTA-3D IN STATIC TEST				DESCRIPTION OF EO: IN MODEL BLOCK FOR* ADDED LTA-3DR EFF				JK 4/3/7

MODEL	PROCURING ACTIVITY NO.	GAEC UNIT NO.	SUB CONTR UNIT NO.
LM		LTA-3D/R	(46)

DRAWING CHANGE REQD		DISPOSITION OF PARTS		APPROVED BY								
REVISE DWG	RECORD EO	REWORK	SCRAP	DATE 3/28/67		SUPPORT	RELIAB GROUP	GROUP LEADER	STRESS GROUP	LIAISON ENGRG	PROJ ENGRG	
✓		NOT	REQD	5	YDI			3/28/67			3-30-67	

PRIORITY: C
DRAWING TITLE: NOTED
DRAWING NO.: LE0280
EO NO.: 539

ISSUED BY G. BARNES / J. STRAKOSCH X1113 SECTION YDI GROUP NO. 335 PL 25

01
NAS 9-1100

PJ

ENG 32.1 REV 3-65

GRUMMAN AIRCRAFT ENGINEERING CORP.
CODE IDENT NO. 26512
ENGINEERING ORDER

DWG. NO. LDW 280-52520
EO NO. C1
CONTROL INFO NO. LM-2-3521

IN FLD & B/M, FOR -1 & -5, DELETE
LDW 280-17749-17 (1)

DETAIL SPEC REQ	☐	CL II ENGRG CHG	☑	CL I ENGRG CHG ☐

2

REASON FOR EO: PART DOES NOT EXIST FOR LATER EFFECTIVITIES DRAWING ERROR CORRECTION

DESCRIPTION OF EO: IN FLD & B/M, FOR -1, -5, DELETED LDW 280-17749-17 (1)

Ⓡ GAEC EO RELEASE C JK 02026

MODEL	PROCURING ACTIVITY NO.	GAEC UNIT NO.	SUB CONTR UNIT NO.
LM		NOT REQD	

DRAWING CHANGE REQD		DISPOSITION OF PARTS	
✓		NOT REQD	
REVISE DWG	RECORD EO	REWORK	SCRAP

		SUPPORT	RELIAB. GROUP	GROUP LEADER	STRESS GROUP	LIAISON ENGRG	PROJ ENGRG	GOVT
APPROVED BY	JGP			~	MSA	CH	DAM (E)	RF
DATE	7/6/67			~	4/21/67	4/21/67	4-25-67	4/21/67
-1-	VDI							

PRIORITY: E

DRAWING TITLE: D/S DECK INSTL - R.H. UPPER DECK

DRAWING NO.: LDW280-52520

EO NO.: C1

ISSUED BY LIAISON Co Farley x3604 4/21/67 SECTION V. D. I. GROUP NO. 335 PL 25

01 NAS 9-1100

C

ENG 32.1 REV 3-65

GRUMMAN AIRCRAFT ENGINEERING CORP.
CODE IDENT NO. 26512
ENGINEERING ORDER

*

DWG. NO. LDW280-52520
EO NO. C2
CONTROL INFO NO LDW280A-7158

IN F/D & L/M REMOVE -5 INSTL
IN M/B RESTRICT -1 FOR USE ON LM-2(32) ONLY

DETAIL SPEC REQ		CL II ENGRG CHG	✓	CL I ENGRG CHG		LD 1533

5

REASON FOR EO: REINFORCE UPPER DECKS

DESCRIPTION OF EO: REMOVED -5. RESTRICTED -1 FOR -LM-2(32) WAS FOR LM-2(32) & LM-3(33)

Ⓡ GAEC EO RELEASE: C
JK 6/15/67

MODEL	EFFECTIVITY		
	PROCURING ACTIVITY NO.	GAEC UNIT NO.	SUB CONTR UNIT NO.
LM		LM-3(33) THRU LTA-3D/R (46)	LM-15(45)

DRAWING CHANGE REQD		DISPOSITION OF PARTS	
REVISE DWG	RECORD EO	REWORK	SCRAP
✓			✓

APPROVED BY									
DATE		6/10/67			6/5/67	6/12/67		6/14/67	6/14/67
	5	VDI	SUPPORT	RELIAB GROUP	GROUP LEADER	STRESS GROUP	LIAISON ENGRG	PROJ ENGRG	~~GOVT~~

PRIORITY: C
DRAWING TITLE: DECK INSTL DES STAGE R.H. UPPER DECK
DRAWING NO.: LDW280-52520
EO NO.: C2

ISSUED BY G. ZEMAN/J. STRAHOSCH SECTION YDI GROUP NO. 335 PL 25

01 NAS 9-1100

-7	-5	-3	-1	CODE IDENT	PART NO.	I&T	NOMENCLATURE OR DESCRIPTION	MATERIAL	GOVT SPEC	COML SPEC	STOCK SIZE	PROCESS SYM	FINISH NO.	ZONE
1		1			LDW280-17699-20	E	CLIP	SEE DWG						4E
1		1			-19		CLIP							4B
1		1			-15		PLATE							6B
2		2			LDW280-17699-13		PLATE							4B,4E
1		1			LDW280-17698-15		ZEE							9B
1		1			LDW280-17697-16		ZEE							9E
1		1			LDW280-17696-18		ANGLE							8F
1		1			-14									5F
1		1			-13									5A
2		2			-12									7F
2		2			LDW280-17696-11		ANGLE							8A
1		1			LDW280-17695-14		ANGLE							5F
1		1			-13									5A
2		2			-12									6F
2		2			LDW280-17695-11		ANGLE							7A
1		1			LDW280-17659-17		STIFFENER							9E
1		1			LDW280-17659-15		STIFFENER							9B
1		1			LDW280-17624-16		ANGLE							3E
1		1			-15									3B
1		1			-14									3F
1		1			-13									3A
1		1			-12									4F
1		1			LDW280-17624-11		ANGLE							4A
1		1			LDW280-17617-14		SPLICE							10A
1		1			LDW280-17617-13	E	SPLICE	SEE DWG						10A

QTY PER ASSEMBLY

SYM OR NO.	PROCESS OR FINISH	GRUMMAN SPEC OR MILITARY SPEC	SYM OR NO.	PROCESS OR FINISH	GRUMMAN SPEC OR MILITARY SPEC	SYM OR NO.	PROCESS OR FINISH	GRUMMAN SPEC OR MILITARY SPEC

I & T: IDENTIFICATION AND TRACEABILITY IN ACCORDANCE WITH : NONE

GRUMMAN AIRCRAFT ENGRG CORP, BETHPAGE, L. I., NEW YORK

SIZE	CODE IDENT NO.		
B	26512	LDW280-52524	B
SCALE NONE		SHEET 2.01	

ENG 77.2 7-65

01

NAS 9-1100

LDW280-52524 C

MODEL OR END ITEM	NEXT ASSY	MODULE OR SER NO.	REQD PER MODULE OR END ITEM
PART NO.		GAEC SCH NO.	

MODEL OR END ITEM	NEXT ASSY	MODULE OR SER NO.	REQD PER MODULE OR END ITEM
LM	LDW280-53510	LM-3(33)	1
PART NO. LDW280-52524-5		GAEC SCH NO. 51-3	

MODEL OR END ITEM	NEXT ASSY	MODULE OR SER NO.	REQD PER MODULE OR END ITEM
LM	LDW280-52510	LM-2(32)	1
PART NO. LDW280-52524-1		GAEC SCH NO. 51-3	

(5)

SH REV STATUS: FOR DESCRIPTION OF REV SEE SUBQ SH

SHEET	1.00	1.10	1.11		2.00	2.01	2.02	2.03	3.00
REV	C	C	C		C	B	C	C	C
SHEET	4.00	5.00							
REV	C	C							
SHEET									
REV									

LAST SECT LTR USED	Z	GRUMMAN REL INFO C	
LAST DASH NO. USED	-7	PRIM NO.	JK(001)
		215	ME-16 C-1/2 19

UNLESS OTHERWISE SPECIFIED DIMENSIONS ARE IN INCHES.
TOLERANCE UNLESS SPECIFIED
FRACTIONS - DECIMALS - ANGLES
± 1/16 ±.020 ±1/2°

ORIG DWG AUTH

DETAIL SPEC REQUIREMENT
CLASS II ENGRG CHANGE
CLASS I ENGRG CHANGE

CONTRACT NO. NAS 9-1100
LINE ITEM NO. 1
DOCUMENTATION TYPE II

DRAWN BY	J. ZALETEL 11-29-66	RELIABILITY	
LAYOUT BY	AMBROSIO		
CHECKED BY	RR 12-7-66		
~~GR LEADER~~			
VEH.DES.INT.	1/11/67		
STRUCTURES	WJH 1/11/67	PROJ ENGR	1/26/67
STRUCTURES	FEB 1/11	REL GROUP	1/27/67
WEIGHTS			

©
GRUMMAN AIRCRAFT ENGRG CORP
BETHPAGE, L. I., NEW YORK

BULKHEAD INST'L
DESCENT STAGE-RIGHT HAND END

SIZE B
CODE IDENT NO. 26512
LDW280-52524 C
SCALE NONE
SHEET 1.00 OF 10

ENG 77.1 12-65

01

NAS 9-1100

REVISIONS FOR CONTINUATION OF REVISIONS SEE SHEET 1.11

CHANGE LTR	ITEM NO.	SHEET NO.	ZONE	GRUMMAN INFO ONLY	DET SPEC	CLASS I	CLASS II	ENGRG ORDER	DESCRIPTION	EFFECTIVITY	DISPOSITION OF EXISTING PARTS REWORK	DISPOSITION OF EXISTING PARTS SCRAP	CHANGED BY AND DATE	ENGRG APPD	~~GOVT~~ APPD
A	1	1,1.10,2, 2.01,2.02 2.03,3,4&5						EOA1	EO A1 INITIAL DRAWING RELEASE PARTS MADE PER E.O.	LM-2&-3	NOT	REQ'D	J. ZALETEL 11-29-66		
	2							EOA2	ADDED TO-1 FIELD, B/M, LDW280-18065-11,-13,-15,-17. ADDED NAS697A08(4), NAS1097-AD3(8) ADDED MS20470 DD5(3) & DRILL #19(4)		✓				
	3	1.10,2,3 4&5						EOA3	IN FIELD & B/M LDW280-17124-21 WAS LDW280-17124-19						
	4	1,1.10,2, 3&4						EOA4	ON-1 REMOVED LM-3 REQUIREMENTS; ADDED-5,-7,& LDW280-53516-4.	LM-3					
	5	1.10,2.03,5						EOA5	FOR -3&-7 ASSY'S IN FIELD & B/M, REPLACED HL10V-12-8(4) WITH GB511D-6-9(4). IN FIELD ADDED SECTION Z-Z	LM-2&-3					
B	1	1.10,3&4						EO B1	REFERENCE EOA2 ADDED LDW280-18065-21,-23,-25. REMOVED FROM -1 DRILL #19, NAS697A08(1), NAS1097-AD3(2)	LM-2	✓			1/26/67	1-27-67
	2	1.10,2.02 3&4						EO B2	REF EOB1 LDW280-18065-37 WAS -23, LDW280-18065-35 WAS -25, LDW280-18065-31 WAS -21, LDW280-18065-27 WAS -17.	LM-2&-3					
	3	1, 1.10							REF. EO B1 EFFECTIVITIES SHOULD BE LM-2 & LM-3	NOT REQ'D	NOT	REQ'D			
	4	1, 1.10							REF. EOA2 9/16" DIMENSION SHOULD BE 27/32."	LM-2&-3	NOT	REQ'D			
	5	1, 1.10						Ⓒ	FOR -3&-7 ASSY'S ADDED LDW280M17141-3 TO B/M ONLY	LM-2&-3	NOT	REQ'D			
C	1	1.00 1.10 2.02 3,4&5	SAF, 6G					LEO280-422	ON-1&-5 INSTL REMOVED LDW280M17141-3 & SECT'S "J-J" & "H-H"	LM-2&-3	✓		HERB. SCHWETER 12-17-68		
	2	2.00 3.00	3A			✓		EO C2 LCD 1629	FOR -3 REPLACED LDW280-23516-6 WITH LDW280-23516-10.	LM-2	✓				
	3	2.02 3.00				✓		LEO280-702 LCD 1997	ON-1&-5 IN B/M ADDED GT535AC-08B, GT535AC-16B & GT535AC-32B TAPES AS REQD. IN FLD/DWG ADDED NOTE 12.	LM-2 LM-3	✓	H.D.			

CHG APPROVED

LTR	~~GROUP LDR~~	VEH.DES.INT.	STRUCTURES	STRUCTURES	WEIGHTS	RELIABILITY
B		1/11/67	1/11/67			
C						

GRUMMAN AIRCRAFT ENGRG CORP., BETHPAGE, L. I., NEW YORK

SIZE	CODE IDENT NO.		
B	26512	LDW280-52524	C Ⓒ
SCALE NONE			SHEET 1.10

ENG 77.16 3-66

01

NAS 9-1100

REVISIONS

FOR CONTINUATION OF REVISIONS SEE SHEET ________

CHANGE LTR	ITEM NO.	SHEET NO.	ZONE	GRUMMAN INFO ONLY	DET SPEC	CLASS I	CLASS II	ENGRG ORDER	DESCRIPTION	EFFECTIVITY	DISPOSITION OF EXISTING PARTS: REWORK	DISPOSITION OF EXISTING PARTS: SCRAP	CHANGED BY AND DATE	ENGRG APPD	GOVT APPD
C	4	1.00 1.11 2.02 2.03 3.00 4.00	9B.C 10D.E	E		✓		EO C4 LCD 1244	ON-5 ADDED LDW280M17738-11 (4), LDW280M17739-11 & -12, GR500A5G (12) WAS MS20470DD5 (12), ADDED SH 1-11	LM-3	✓		ES HERB. SCHWETER 12-17-68	1/21/69	
	5	3.00	9B			✓		EO C5 LCD 1244	ON-5 IN FLD/DWG $21\frac{5}{8}$ WAS $21\frac{7}{16}$ (REF EO C4)						
	6	2.02 3.00 5.00	3A 9J	P		✓		EO C6 LCD2360	ON-5 INSTL REMOVED LDW280-18065-27(1), ADDED LDW280-18586-11(1)						
	7	2.02 3.00 5.00	3C 10H	LFM 282		✓		LEO280-1186 LCD 3537	ON-5 LDW280M17136-5-1 REPLACED LDW280M17136-5 ADDED NOTE 13.			H.D.			
	8								REF. LEO 280-422 (C1): ON-1 & -5 SHOULD BE ON-3 & -7	LM-2 & LM-3	✓		H. DEUTSCH 12-17-68	F. Zul[illegible] 12-17-68	
	9	4.00	10E	E		✓		LCD 1244	REF. EO C4: 20 3/8 DIM. SHOULD BE 20 7/16 DIM.	LM-3	✓				

CHG APPROVED: LTR	GROUP LDR	VEH DES INT	STRUCTURES	STRUCTURES	WEIGHTS	RELIABILITY
C	Thoy[illegible] 1-16-69	JGB 1/17/69	NM 1-20-69	JGB 1/20/69		

GRUMMAN AIRCRAFT ENGRG CORP., BETHPAGE, L. I., NEW YORK

SIZE B

CODE IDENT NO. 26512

LDW280-52524 C

SCALE NONE

SHEET 1-11

ENG 77.16 3-66

01

NAS 9-1100

QTY PER ASSEMBLY -7	-5	-3	-1	CODE IDENT	PART NO.	I&T	NOMENCLATURE OR DESCRIPTION	MATERIAL	GOVT SPEC	COML SPEC	STOCK SIZE	PROCESS SYM	FINISH NO.	ZONE
1		1			LDW280-17614-18	E	SPLICE	SEE DWG						10F
1		1			LDW280-17614-17		SPLICE							10F
4		4			LDW280-17613-15		SPLICE							3A,3F
4		4			-13		SPLICE							3A,3F
4		4			LDW280-17613-11		SPLICE							3A,3F
2		2			LDW280-17429-13		DOUBLER							3C,3D
	1		1		LDW280-17429-11		ZEE							4C
2		2			LDW280-17341-13		DOUBLER							3C,3D
1		1			LDW280-17196-11		TEE							6A
1		1			LDW280-17154-12		STIFFENER							7D
1		1			LDW280-17154-11		STIFFENER							6C
	1		1		LDW280-17150-12		CLIP							4D
	1		1		LDW280-17150-11		CLIP							4C
1		1			LDW280-17124-21		WEB							10B
1					LDW280-53516-4		TRUSS INST'L							3A
		1			LDW280-23516-10		TRUSS INST'L	SEE DWG						3A
	1				LDW280-52524-7		BULKHEAD ASS'Y					NONE	NONE	8A
					LDW280-52524-5		BULKHEAD INST'L					NONE	NONE	8A
			1		LDW280-52524-3		BULKHEAD ASSY					NONE	NONE	8A
					LDW280-52524-1	E	BULKHEAD INST'L					NONE	NONE	8A

SYM OR NO.	PROCESS OR FINISH	GRUMMAN SPEC OR MILITARY SPEC	SYM OR NO.	PROCESS OR FINISH	GRUMMAN SPEC OR MILITARY SPEC	SYM OR NO.	PROCESS OR FINISH	GRUMMAN SPEC OR MILITARY SPEC
						88	ANODIZE	LSP 14-9030

I&T: IDENTIFICATION AND TRACEABILITY IN ACCORDANCE WITH :
NONE

GRUMMAN AIRCRAFT ENGRG CORP, BETHPAGE, L. I., NEW YORK

SIZE	CODE IDENT NO.		
B	26512	LDW280-52524	C

SCALE NONE
SHEET 2.00

ENG 77.2 7-65

01

NAS 9-1100

				AS REQD		AS REQD		GT535AC-32B	E	TAPE	GRUMMAN STD	SEE NOTE 12					
				AS REQD		AS REQD		GT535AC-16B	↑	TAPE	↑	SEE NOTE 12					
				AS REQD		AS REQD		GT535AC-08B		TAPE		SEE NOTE 12					
								SEE NOTE NO.1		SHIM	↓						
			2		2			G120-170-5-11A		SHIM	GRUMMAN STD						3B
				1				LDW280M17739-12		FITTING	SEE DWG						
				1				LDW280M17739-11		↑	↑						
			1		1			LDW280M17471-2									4F
			1		1			LDW280M17471-1									4A
			2		2			LDW280M17470-3		↓							3A,3F
				4				LDW280M17738-11		FITTING							
			1		1			LDW280M17418-1		LOWER CAP							3B
			1		1			LDW280M17405-5		CORNER POST							3A
			1		1			LDW280M17404-7		CORNER POST							3F
			1		1			LDW280M17325-2		FITTING							4F
			1		1			LDW280M17325-1		FITTING							4A
			1		1			LDW280M17230-8		STIFFENER							4F
			1		1			LDW280M17230-7		STIFFENER							4A
				1				LDW280M17136-5-1		FITTING							5A,5F
						1		LDW280M17136-5		FITTING							3C
			1		1			LDW280M17113-4		UPPER CAP							10B
				1				LDW280-18586-11		CLIP							3A
				1		1		LDW280-18065-37		↑							7F
				1		1		↑ -35									6A
				1		1		↓ -31		↓							5F
						1		LDW280-18065-27		CLIP							3A
									↓		↓						
			1		1			LDW280-17977-13	E	ANGLE	SEE DWG						8A
			-7	-5	-3	-1	CODE IDENT	PART NO.	I&T	NOMENCLATURE OR DESCRIPTION	MATERIAL	GOVT SPEC	COML SPEC	STOCK SIZE	PROCESS SYM	FINISH NO.	ZONE
QTY PER ASSEMBLY																	

SYM OR NO.	PROCESS OR FINISH	GRUMMAN SPEC OR MILITARY SPEC	SYM OR NO.	PROCESS OR FINISH	GRUMMAN SPEC OR MILITARY SPEC	SYM OR NO.	PROCESS OR FINISH	GRUMMAN SPEC OR MILITARY SPEC

I & T: IDENTIFICATION AND TRACEABILITY IN ACCORDANCE WITH :
NONE

·GRUMMAN AIRCRAFT ENGRG CORP, BETHPAGE, L. I., NEW YORK

SIZE B | CODE IDENT NO. 26512 | LDW280-52524 | C ©

SCALE NONE | SHEET 2.02

ENG 77.2 7-65

01

NAS 9-1100

			-7	-5	-3	-1	CODE IDENT	PART NO.	I&T	NOMENCLATURE OR DESCRIPTION	MATERIAL	GOVT SPEC	COML SPEC	STOCK SIZE	PROCESS SYM	FINISH NO.	ZONE
								NAS1097DD5	E	RIVET	STD PART						
								MS20470DD6	↑	↑	↑						
								MS20470DD5									
								MS20470DD4		↓	↓						
								MS20470 AD4		RIVET	STD PART						
				4		4		GR501A-4H		RIVET	GRUMMAN STD						
				1		1		GR500A-4E		↑	↑						
				4		4		GR500A-4D		↓							
				12				GR500A-5G		RIVET							
			4		4			GN512H-6		COLLAR							
			32		32			GN512H-4		↑							
			16	2	16	2		GN512H-3		↓	↓						
			28		28			GN512H-08		COLLAR	GRUMMAN STD						
			8		8			GB511K-4-8		BOLT	GRUMMAN STD						
			8		8			GB511K-4-6		↑	↑						
			8		8			GB511K-4-5									
			4		4			GB511K-4-4									
			4		4			GB511K-4-3									
			10		10			GB511K-3-5									
			6	2	6	2		GB511K-3-4									
			8		8			GB511K-08-6									
			8		8			GB511K-08-5									
			12		12			GB511K-08-3	↓	↓	↓						
			4		4			GB511D-6-9	E	BOLT	GRUMMAN STD						

QTY PER ASSEMBLY

SYM OR NO.	PROCESS OR FINISH	GRUMMAN SPEC OR MILITARY SPEC	SYM OR NO.	PROCESS OR FINISH	GRUMMAN SPEC OR MILITARY SPEC	SYM OR NO.	PROCESS OR FINISH	GRUMMAN SPEC OR MILITARY SPEC

I&T: IDENTIFICATION AND TRACEABILITY IN ACCORDANCE WITH :
NONE

GRUMMAN AIRCRAFT ENGRG CORP, BETHPAGE, L. I., NEW YORK

SIZE	CODE IDENT NO.		
B	26512	LDW280-52524	C

SCALE NONE

SHEET 2.03

ENG 77.2 7-65

01

NAS 9-1100

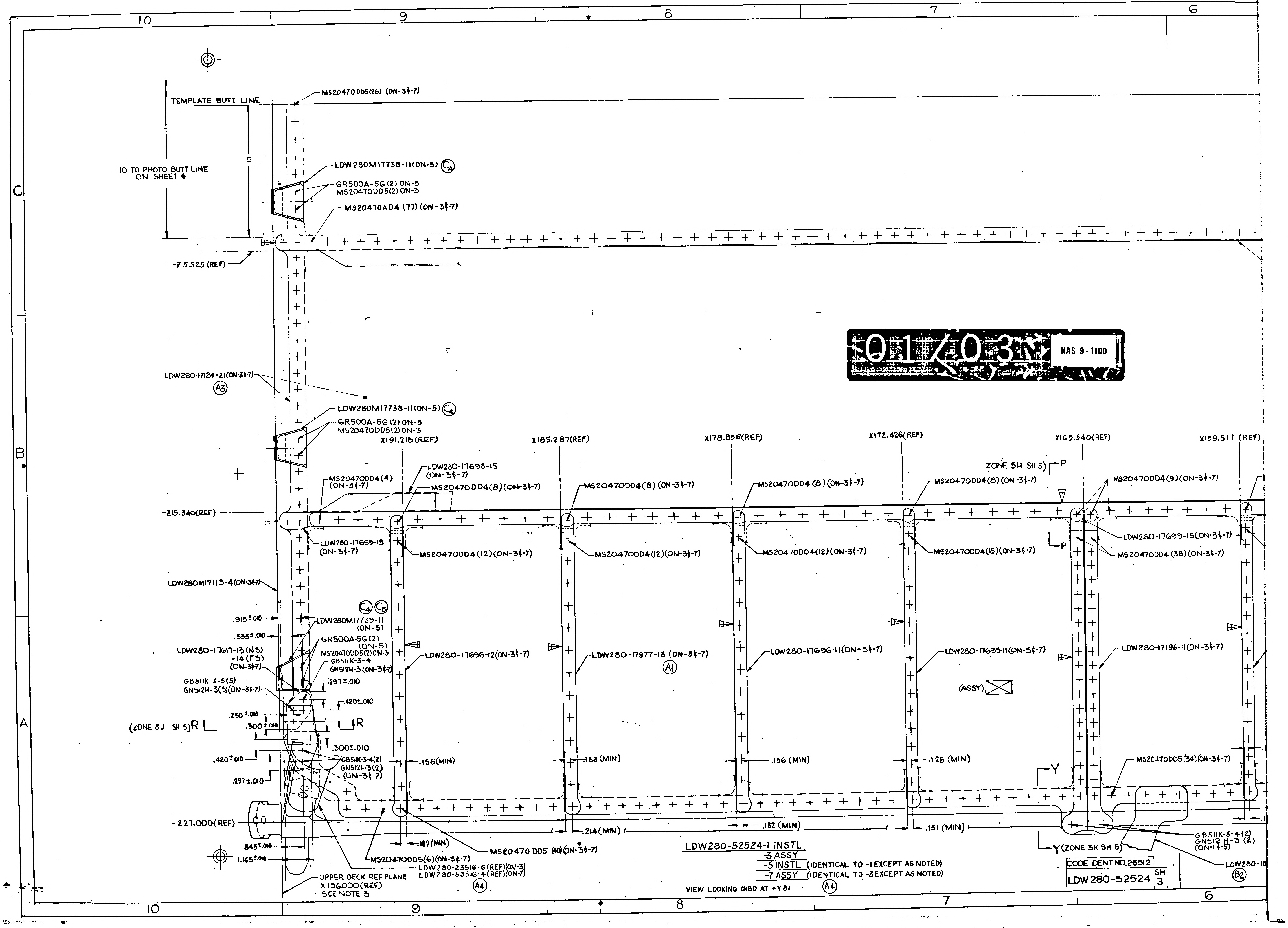

10
9
8
7
6
C
B
A
TEMPLATE BUTT LINE
MS20470DD5(26) (ON-3&-7)
5
10 TO PHOTO BUTT LINE ON SHEET 4
LDW280M17738-11(ON-5) C4
GR500A-5G(2) ON-5
MS20470DD5(2) ON-3
MS20470AD4 (77) (ON-3&-7)
-Z 5.525 (REF)
LDW280-17124-21(ON-3&-7) A3
LDW280M17738-11(ON-5) C4
GR500A-5G(2) ON-5
MS20470DD5(2) ON-3
X191.218 (REF)
X185.287(REF)
X178.856(REF)
X172.426(REF)
X165.540(REF)
X159.517 (REF)
ZONE 5H SH 5) P
MS20470DD4(4) (ON-3&-7)
LDW280-17698-15 (ON-3&-7)
MS20470DD4(8)(ON-3&-7)
MS20470DD4(8) (ON-3&-7)
MS20470DD4 (8) (ON-3&-7)
MS20470DD4(8) (ON-3&-7)
MS20470DD4(9)(ON-3&-7)
-Z15.340(REF)
LDW280-17659-15 (ON-3&-7)
MS20470DD4 (12)(ON-3&-7)
MS20470DD4(12)(ON-3&-7)
MS20470DD4(12) (ON-3&-7)
MS20470DD4(15)(ON-3&-7)
P
LDW280-17699-15(ON-3&-7)
MS20470DD4 (38)(ON-3&-7)
LDW280M17113-4(ON-3&-7)
C4 C5
.915±.010
.535±.010
LDW280M17739-11 (ON-5)
GR500A-5G(2) (ON-5)
MS20470DD5(2)ON-3
LDW280-17617-13 (NS) -14 (FS) (ON-3&-7)
GB511K-3-4
GN512H-3 (ON-3&-7)
GB511K-3-5(5)
GN512H-3(5)(ON-3&-7)
.297±.010
.420±.010
.250±.010
.300±.010
(ZONE 5J SH 5) R
R
.300±.010
.420±.010
.297±.010
GB511K-3-4(2)
GN512H-3(2)
(ON-3&-7)
LDW280-17696-12(ON-3&-7)
LDW280-17977-13 (ON-3&-7) A1
LDW280-17696-11(ON-3&-7)
LDW280-17695-11(ON-3&-7)
(ASSY)
LDW280-17196-11(ON-3&-7)
.156(MIN)
.188 (MIN)
.156 (MIN)
.125 (MIN)
Y
MS20470DD5(34)(ON-3&-7)
-Z27.000(REF)
.214 (MIN)
.182 (MIN)
.151 (MIN)
.182(MIN)
.845±.010
1.165±.010
MS20470DD5(6)(ON-3&-7)
MS20470 DD5 (40)(ON-3&-7)
LDW280-23516-6 (REF)(ON-3)
LDW280-53516-4 (REF)(ON-7)
A4
UPPER DECK REF PLANE
X 196.000(REF)
SEE NOTE 3
Y (ZONE 3K SH 5)
GB511K-3-4(2)
GN512 H-3 (2)
(ON-1&-5)
LDW280-18
B2
01/03
NAS 9-1100

LDW280-52524-1 INSTL
-3 ASSY
-5 INSTL (IDENTICAL TO -1 EXCEPT AS NOTED)
-7 ASSY (IDENTICAL TO -3 EXCEPT AS NOTED)

VIEW LOOKING INBD AT +Y81 (A4)

CODE IDENT NO. 26512	
LDW 280-52524	SH 3

02/03 NAS 9-1100

6
5
4
3
2
X136.015 (REF)
GR500A-4E (ON-1½-5) (SEE NOTE 9)
GR500A-4D (4) (ON-1½-5) (SEE NOTE 9)
GR501A-4H (2) (ON-1½-5) (CSK NS LDW280M17136-5) (SEE NOTE 9)
TEMPLATE BUTT LINE
± Z.000
LDW280M17136-5 (ON-1) (SEE NOTE 3) -5-1 (ON-5)
MS20470 DD5 (7) (ON-3½-7)
(ZONE 10G SH. 5)
A
LDW280-17429 -11 (ON-1½-5)
COORDINATE WITH LDW280-23900 INSTL
(ZONE 5G SH 5)
M
LDW280-17150-11 (ON-1½-5)
MS20470AD4 (7) (ON-1½-5)
MS20470DD5 (7) (ON-1½-5)
MS20470DD5 (2) (ON-1½-5)
V (ZONE 3H SH 5)
PHOTO BUTT LINE
-Z5.525 (REF)
LDW280-17341-13 (ON-3½-7)
5
10 TO PHOTO BUTT LINE ON SH 4
80
30
LDW280-17154 -11 (ON-3½-7)
MS20470AD4 (16) (ON-1½-5)
MS20470 DD5 (5) (ON-3½-7)
LDW280-17429 -13 (ON-3½-7)
NAS1097DD5 (6) (ON-3½-7) CSK LDW280-17154-14 LOCATE FROM LDW280-17341-13
MS20470DD5 (12) (ON-3½-7)
MS20470DD5 (12) (ON-3½-7)
+Z
-Y
+Y
-Z
LDW280-52524-1
(FOR ENGR REF ONLY)
LDW280M17418-1 (ON-3½-7)
X142.000 (REF)
X141.187 (REF)
X159.517 (REF)
X153.636 (REF)
X147.755 (REF)
X138.193 (REF)
X135.198 (REF)
T
K
K (ZONE 8J SH5)
MS20470DD4 (9) (ON-3½-7)
MS20470DD4 (8) (ON-3½-7)
MS20470DD4 (8) (ON-3½-7)
MS20470DD4 (9) (ON-3½-7)
LDW280-17699-13 (ON-3½-7)
LDW280-17699-19 (ON-3½-7)
G120-170-5-11A (ON-3½-7)
-Z15.340 (REF)
LDW280-17699-15 (ON-3½-7)
MS20470DD4 (38) (ON-3½-7)
MS20470DD4 (15) (ON-3½-7)
MS20470DD4 (15) (ON-3½-7)
MS20470DD4 (15) (ON-3½-7)
MS20470DD4 (30) (ON-3½-7)
(ZONE 5G SH 5)
.214 MIN
MS20470DD5 (16) (ON-3½-7)
MS20470DD4 (15) (ON-3½-7)
MS20470DD4 (7) (ON-3½-7)
.188 (MIN)
LDW280-17624-15 (ON-3½-7)
.188 (MIN.)
.214 (MIN.)
F (ZONE 2A SH 3)
MS20470DD5 (10) (ON-3½-7)
LDW280-17613-11 (2) (ON-3½-7)
LDW280-17613-15 (2) (ON-3½-7)
LDW280-17613-13 (2) (ON-3½-7)
LDW280-17696-13 (ON-3½-7)
LDW280M17230-7 (ON-3½-7)
LDW280-17196-11 (ON-3½-7)
LDW280-17695-11 (ON-3½-7)
LDW280-17695-13 (ON-3½-7)
LDW280-17624-11 (ON-3½-7)
LDW280-17624-13 (ON-3½-7)
MS20470DD4 (12) (ON-3½-7)
.375±.010
.375±.010
X134.050 (REF)
.437±.010
.562±.010
.375±.010
GB511K-4-5 (4) GN512H-4 (4) (ON-3½-7)
LDW280-23516 (ON-3) LDW280-53516-4 (ON-7) (SEE NOTE 3)
MS20470DD5 (16) (ON-3½-7)
GB511K-08-3 (2) GN512H-08 (2) (ON-3½-7)
GB511K-08-5 (4) GN512H-08 (4) (ON-3½-7)
.188 (MIN)
.125 (MIN)
.156 (MIN)
MS20470DD5 (34) (ON-3½-7)
E
X137.540 (REF)
.214 (MIN)
.214 (MIN)
GB511K-4-4 (2) GN512H-4 (2) (ON-3½-7) LOCATE FROM LDW280M17325-1
LDW280M17405-5 (ON-3½-7)
.938±.010
GB511K-08-3 (4) GN512H-08 (4) (ON-3½-7)
SHIM AS REQD .050 MAX. (SEE NOTE 1)
AFT BEAM PANEL REFERENCE PLANE -Z27.000 (REF) (SEE NOTE 3)
-Z27.875 (REF)
LDW280M17470-3 (ON-3½-7) (SEE NOTE 3)
.151 (MIN)
.182 (MIN)
.214 (MIN)
GB511K-3-4 (2) GN512H-3 (2) (ON-1½-5)
K SH 5)
X150.750 (REF)
(ZONE 8G SH 5)
E
GB511K-4-3 (2) GN512H-4 (2) (ON-3½-7) LOCATE FROM LDW280M17325-1
LDW280-18065-35 (ON-1½-5)
MS20470DD5 (3)
LDW280M17471-1 (ON-3½-7) (SEE NOTE 3)
+X136.640 (REF)
LDW280-18065-27 (ON-1) LDW280-18586-11 (ON-5)
LDW280M17325-1 (ON-3½-7) SEE NOTE 3
B
LOWER DECK REF PLANE X131.140 (REF) SEE NOTE 3
B (ZONE 10H SH 5)
+Y 81.000 (REF)
.531±.010
6
LDW280-17124-21 (REF)
LDW280M17413-1 (REF)
LDW280-17613-11 (2) (REF)
LDW280-17613-15 (REF)
LDW280-17613-13 (REF)
.375±.010
.375±.010
.375±.010
.437±.010
.500±.010
.500±.010
.500±.010
.562±.010
.375±.010
LDW280M17405-5 (REF)
.375±.010
.625±.010
.812±.010
GB511K-4-6 (4) GN512H-4 (4) (ON-3½-7)
GB511K-4-8 (4) GN512H-4 (4) (ON-3½-7)
(SEE NOTE 3)
VIEW F-F (SHOWN) (ZONE 3A SH 3)
VIEW G-G (OPP) (ZONE 3F SH 4)
A3
A4
C2
C7
G
B2
C6

CODE IDENT NO. 26512
LDW280-52524
SH 3

IDENT NO. 26512
280-52524
SH 3

MANUFACTURING OPERATIONS UNLESS OTHERWISE SPECIFIED NOTES CHECKED ✓ APPLY TO THIS DWG.	
RUBBER STAMP PART NUMBER AND ALL OTHER MARKINGS IN REGION MARKED ⊠ USE BOTH SIDES IF NECESSARY.	✓
FILLET AND INSIDE CORNER RADII TOLERANCES .016R TO .062R ± .008 .063R TO .250R ± .015 OVER .250R ± .030	
DEPTH SHOWN FOR TAPPED HOLES IS FULL THDS. 2-3 IMP. THDS. BEYOND PERMISSIBLE	
EXTERNAL THREAD LENGTH SHOWN INCLUDES 2 IMPERFECT THREADS MAX.	
DO NOT CADMIUM PLATE & PAINT HOLES OR SURFACES MARKED WITH DOUBLE ASTERISK.	
MISMATCH STEP OF ± .005 PERMISSIBLE DUE TO CHANGE OF CUTTERS AT INSIDE INTERSECTING SURFACES.	
DIAMETERS MARKED MUST BE CONCENTRIC WITHIN FULL INDICATOR READING.	
HOLES MUST BE KEPT FREE OF CHROME PLATING SOLUTION.	
ALL DIMENSIONS SHOWN TO BE MET AFTER CADMIUM PLATING. THICKNESS OF PLATE .0003 MIN TO .0005 MAX. MIN THICKNESS TO BE .0002 ON THREADED AREAS. NO ALLOWANCES FOR PLATING IN HOLES	
125 √ SURFACE ROUGHNESS INCLUDING REAMED HOLES PER MIL-STD-10	
200 √ FOR ALL DRILLED HOLES	
REMOVE ALL BURRS. BREAK ALL EDGES .015-.031	
INSPECTION INFORMATION MINIMUM PERMISSIBLE EDGE DISTANCE IS 1 1/2 FASTENER DIA. FROM FASTENER ℄	✓
SYMBOL √ DENOTES SURFACE TO BE MACHINED	
UNLESS OTHERWISE SPECIFIED TOLERANCE ON FLANGES IS ± 1/32	
LENGTHS OF AN, NAS & MS AL ALY RIVETS SHORTER THAN 1 INCH ARE NOT SPECIFIED	
TOLERANCE ON LOFTED DELINEATIONS IS ± 1/16	✓

DWG SIZE 34x106

PRINTING INFO ONLY

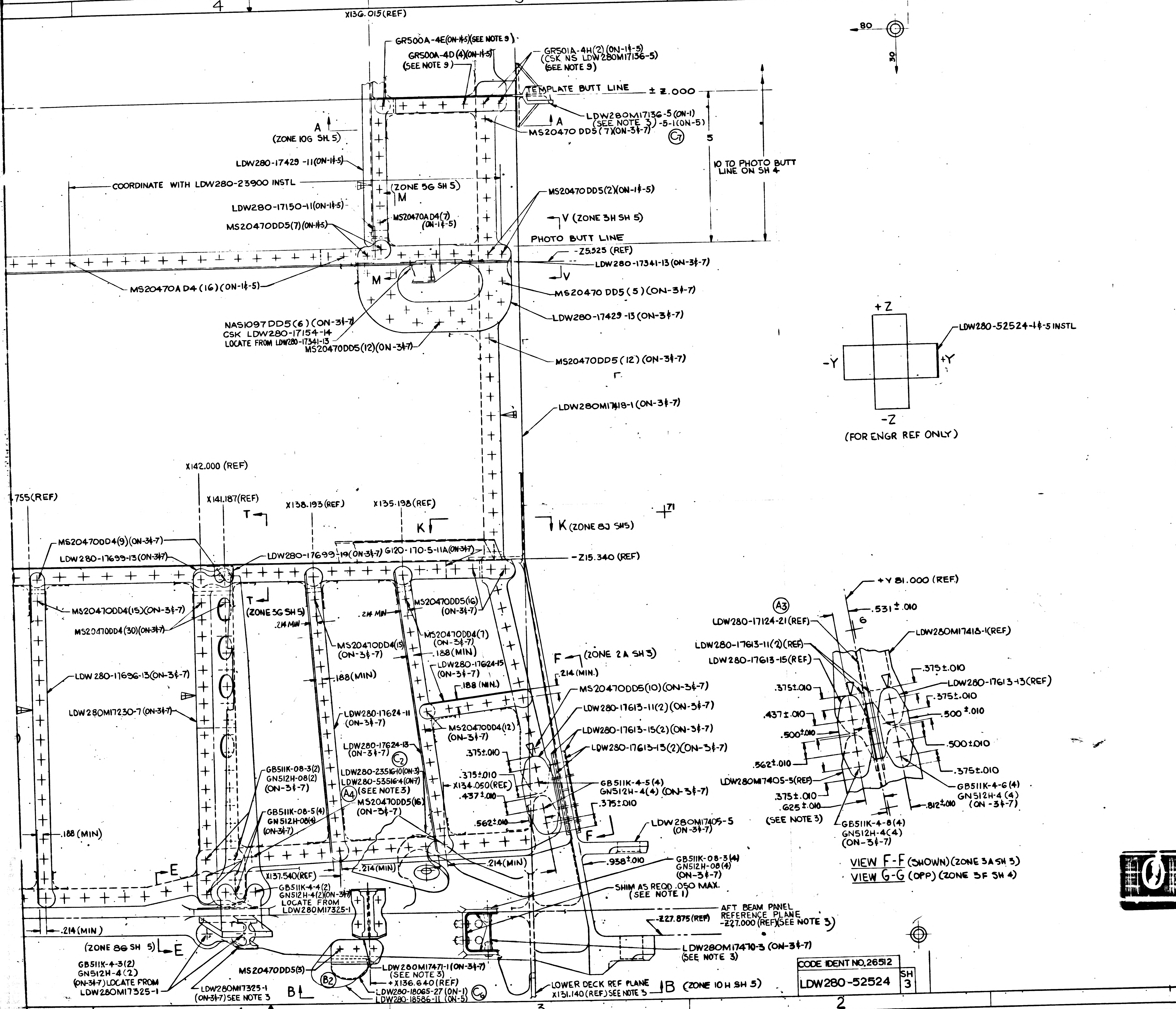
4
3
2
1
X136.015(REF)
GR500A-4E(ON-1+5)(SEE NOTE 9)
GR500A-4D(4)(ON-1+5)
(SEE NOTE 9)
GR501A-4H(2)(ON-1+5)
(CSK NS LDW280M17136-5)
(SEE NOTE 9)
TEMPLATE BUTT LINE
± Z.000
LDW280M17136-5(ON-1)
(SEE NOTE 3) -5-1(ON-5)
MS20470 DD5(7)(ON-3+7)
C7
A
(ZONE 10G SH. 5)
LDW280-17429-11(ON-1+5)
COORDINATE WITH LDW280-23900 INSTL
(ZONE 5G SH 5)
M
LDW280-17150-11(ON-1+5)
MS20470DD5(7)(ON-1+5)
MS20470AD4(7)
(ON-1+5)
MS20470 DD5(2)(ON-1+5)
V (ZONE 3H SH 5)
PHOTO BUTT LINE
5
10 TO PHOTO BUTT LINE ON SH 4
-Z5.525 (REF)
LDW280-17341-13 (ON-3+7)
MS20470AD4(16)(ON-1+5)
MS20470 DD5(5)(ON-3+7)
LDW280-17429-13 (ON-3+7)
NAS1097DD5(6)(ON-3+7)
CSK LDW280-17154-14
LOCATE FROM LDW280-17341-13
MS20470DD5(12)(ON-3+7)
MS20470DD5(12)(ON-3+7)
LDW280M17418-1(ON-3+7)
80
30
+Z
-Y
+Y
-Z
LDW280-52524-1+5 INSTL
(FOR ENGR REF ONLY)
X142.000 (REF)
X141.187(REF)
X138.193 (REF)
X135.198 (REF)
.755(REF)
T
K
K (ZONE 8J SH5)
71
MS20470DD4(9)(ON-3+7)
LDW280-17699-13(ON-3+7)
LDW280-17699-19(ON-3+7)
G120-170-5-11A(ON-3+7)
-Z15.340 (REF)
MS20470DD4(15)(ON-3+7)
MS20470DD4(30)(ON-3+7)
(ZONE 3G SH 5)
.214 MIN
MS20470DD5(16)
(ON-3+7)
MS20470DD4(15)
(ON-3+7)
MS20470DD4(7)
(ON-3+7)
.188(MIN)
.188(MIN)
LDW280-17624-15
(ON-3+7)
.188 (MIN)
F (ZONE 2A SH 3)
.214 (MIN.)
LDW280-17696-13(ON-3+7)
LDW280M17230-7(ON-3+7)
LDW280-17624-11
(ON-3+7)
MS20470DD4(12)
(ON-3+7)
MS20470DD5(10)(ON-3+7)
LDW280-17613-11(2)(ON-3+7)
LDW280-17613-15(2)(ON-3+7)
LDW280-17613-13(2)(ON-3+7)
LDW280-17624-13
(ON-3+7)
C2
.375±.010
.375±.010
X134.050(REF)
.437±.010
LDW280-23516-10(ON-3)
LDW280-23516-4(ON-7)
A4 (SEE NOTE 3)
MS20470DD5(16)
(ON-3+7)
GB511K-4-5(4)
GN512H-4(4) (ON-3+7)
.375±.010
.562±.010
GB511K-08-3(2)
GN512H-08(2)
(ON-3+7)
GB511K-08-5(4)
GN512H-08(4)
(ON-3+7)
.188 (MIN)
E
X137.540(REF)
.214(MIN)
.214(MIN)
GB511K-4-4(2)
GN512H-4(2)(ON-3+7)
LOCATE FROM LDW280M17325-1
LDW280M17405-5
(ON-3+7)
F
.938±.010
GB511K-08-3(4)
GN512H-08(4)
(ON-3+7)
SHIM AS REQD .050 MAX.
(SEE NOTE 1)
.214 (MIN)
AFT BEAM PANEL REFERENCE PLANE
-Z27.000 (REF)(SEE NOTE 3)
-Z27.875(REF)
(ZONE 8G SH 5)
E
GB511K-4-3(2)
GN512H-4(2)
(ON-3+7)LOCATE FROM LDW280M17325-1
MS20470DD5(8)
LDW280M17471-1(ON-3+7)
(SEE NOTE 3)
X136.640(REF)
LDW280-18065-27 (ON-1)
LDW280-18586-11 (ON-5)
B2
C6
LDW280M17470-3 (ON-3+7)
(SEE NOTE 3)
LDW280M17325-1
(ON-3+7) SEE NOTE 3
B
LOWER DECK REF PLANE
X131.140 (REF) SEE NOTE 3
B (ZONE 10H SH 5)
+Y 81.000 (REF)
A3
.531±.010
6
LDW280-17124-21 (REF)
LDW280M17418-1(REF)
LDW280-17613-11(2)(REF)
LDW280-17613-15(REF)
.375±.010
LDW280-17613-13(REF)
.375±.010
.375±.010
.437±.010
.500±.010
.500±.010
.500±.010
.562±.010
.375±.010
LDW280M17405-5(REF)
GB511K-4-6(4)
GN512H-4(4)
(ON-3+7)
.375±.010
.625±.010
(SEE NOTE 3)
.812±.010
GB511K-4-8(4)
GN512H-4(4)
(ON-3+7)

VIEW F-F (SHOWN) (ZONE 3A SH 3)
VIEW G-G (OPP) (ZONE 3F SH 4)

NOTES:

1. SHIM AS REQUIRED USING AL ALLOY QQ-A-250/4, 2024-T3, FINISH 88.
2. NO TOOLING HOLES PERMITTED IN PARTS.
3. FOR BASIC JIG DATA SEE LDW280-23511.
4. TOLERANCE ON LINES MARKED ◁⊞ TO BE ±1/32.
5. INSTALL FASTENERS PER LSP14-15302, LSP 14-15303,& LSP14-15306.
6. FASTENER MANUFACTURED HEAD (OTHER THAN CSK ATTACHMENTS) TO BE ON WEB SIDE UNLESS OTHERWISE SPECIFIED.
7. TOLERANCE ON LOFTED LOCATIONS OF RIVETS THRU LDW280-17124-21 IS ± 1/32; OTHERS TO BE LOCATED FROM DETAIL PARTS.
8. PERMISSIBLE OIL CAN DEPTH OF WEBS BETWEEN STIFFENERS IS ±.100.
9. INSTALL RIVETS WET AND OVERCOAT RIVET HEADS WITH EPON 919 PER LSP14-14102.
10. TOLERANCES ON LINES MARKED ◁ TO BE ± 1/64.
11. GR500A-5G MAY BE SUBSTITUTED FOR MS20470 DD5 RIVETS WHERE REQUIRED.
12. UPON COMPLETION OF BULKHEAD INSTL, ADD TAPE PER LPC 280-41.
13. THIS DWG AFFECTED BY THE FOLLOWING LFM(S) SEE LFM FOR EFFECTIVTY AND MODIFICATION LFM 282.

LDW280-52524 C

03/03 NAS 9-1100

CODE IDENT NO. 26512	SH
LDW280-52524	3

GRUMMAN AIRCRAFT ENGRG CORP. BETHPAGE, L. I., NEW YORK

MODEL OR END ITEM	SIZE	CODE IDENT NO.		
LM	J	26512	LDW280-52524	C
	SCALE FULL		SHEET 3.00	

FOR PHOTO REPRODUCTION

THIS IS AN ORIGINAL DWG — 3 FRAMES

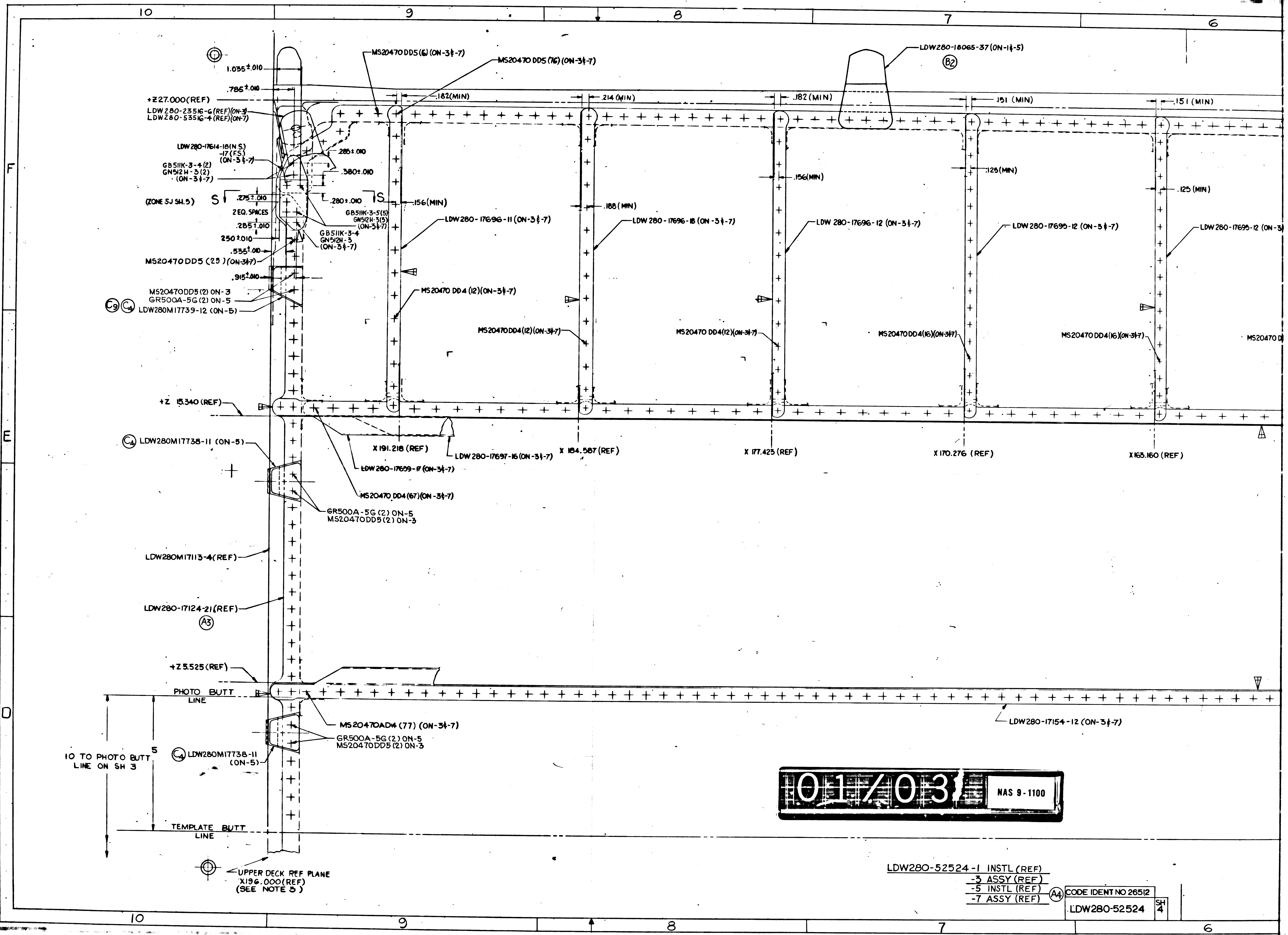
10
9
8
7
6
F
E
D
1.035±.010
.785±.010
+Z27.000(REF)
LDW280-23516-6(REF)(ON-3)
LDW280-53516-4(REF)(ON-7)
LDW280-17614-18(N.S.)
-17(F.S.)
(ON-3 & -7)
GB511K-3-4(2)
GN512H-3(2)
(ON-3 & -7)
(ZONE 5J SH.5)
S
.275±.010
2 EQ. SPACES
.285±.010
250±.010
.535±.010
MS20470DD5 (25)(ON-3&-7)
.915±.010
MS20470DD5(2) ON-3
GR500A-5G(2) ON-5
C9 C4 LDW280M17739-12 (ON-5)
.285±.010
.380±.010
.280±.010
S
GB511K-3-5(5)
GN512H-3(5)
(ON-3&-7)
GB511K-3-4
GN512H-3
(ON-3&-7)
MS20470DD5(6)(ON-3&-7)
MS20470DD5(76)(ON-3&-7)
.182(MIN)
.214(MIN)
.182(MIN)
.151 (MIN)
.151 (MIN)
LDW280-18065-37(ON-1&-5)
B2
.156(MIN)
.188(MIN)
.156(MIN)
.125(MIN)
.125 (MIN)
LDW280-17696-11(ON-3&-7)
LDW 280-17696-18 (ON-3&-7)
LDW 280-17696-12 (ON-3&-7)
LDW280-17695-12 (ON-3&-7)
LDW280-17695-12 (ON-3
MS20470 DD4 (12)(ON-3&-7)
MS20470DD4(12)(ON-3&-7)
MS20470 DD4(12)(ON-3&-7)
MS20470DD4(16)(ON-3&-7)
MS20470DD4(16)(ON-3&-7)
MS20470 D
+Z 15.340 (REF)
X 191.218 (REF)
LDW 280-17697-16(ON-3&-7)
X 184.587 (REF)
X 177.423 (REF)
X 170.276 (REF)
X 163.160 (REF)
C4 LDW280M17738-11 (ON-5)
LDW280-17659-17(ON-3&-7)
MS20470 DD4(67)(ON-3&-7)
GR500A-5G(2) ON-5
MS20470DD5(2) ON-3
LDW280M17113-4(REF)
LDW280-17124-21(REF)
A3
+Z 5.525 (REF)
PHOTO BUTT LINE
MS20470AD4 (77) (ON-3&-7)
GR500A-5G(2) ON-5
MS20470DD5(2) ON-3
LDW280-17154-12 (ON-3&-7)
5
10 TO PHOTO BUTT LINE ON SH 3
C4 LDW280M17738-11 (ON-5)
TEMPLATE BUTT LINE
UPPER DECK REF PLANE
X196.000(REF)
(SEE NOTE 3)
01/03
NAS 9-1100
LDW280-52524-1 INSTL (REF)
-3 ASSY (REF)
-5 INSTL (REF)
-7 ASSY (REF)
A4
CODE IDENT NO 26512
LDW280-52524
SH 4
3
3

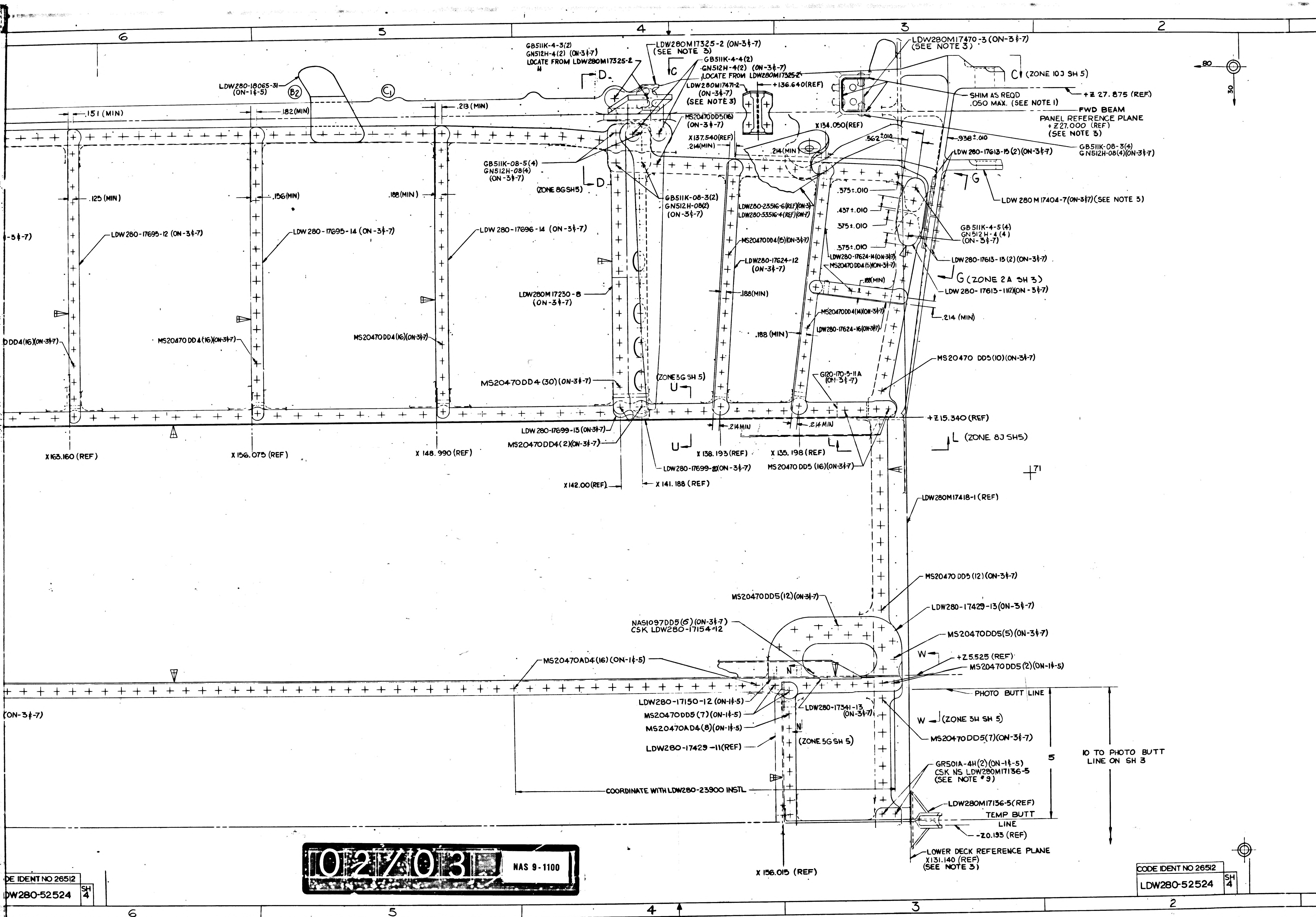
6
5
4
3
2
GB511K-4-3(2)
GN512H-4(2) (ON-3⅛-7)
LOCATE FROM LDW280M17325-2
LDW280M17325-2 (ON-3⅛-7)
(SEE NOTE 3)
GB511K-4-4(2)
GN512H-4(2) (ON-3⅛-7)
LOCATE FROM LDW280M17325-2
LDW280M17470-3 (ON-3⅛-7)
(SEE NOTE 3)
C (ZONE 10J SH 5)
+Z 27.875 (REF)
SHIM AS REQD
.050 MAX. (SEE NOTE 1)
FWD BEAM
PANEL REFERENCE PLANE
+Z 27.000 (REF)
(SEE NOTE 3)
LDW280-18065-31 (ON-1⅛-5)
B2
C1
D
C
LDW280M17471-2 (ON-3⅛-7)
(SEE NOTE 3)
+136.640(REF)
.151 (MIN)
.182(MIN)
.213 (MIN)
MS20470DD5(16) (ON-3⅛-7)
X137.540(REF)
.214(MIN)
X134.050(REF)
.214(MIN)
.562±.010
.938±.010
GB511K-08-3(4)
GN512H-08(4)(ON-3⅛-7)
LDW 280-17613-15 (2)(ON-3⅛-7)
GB511K-08-5(4)
GN512H-08(4)
(ON-3⅛-7)
(ZONE 8G SH5)
D
G
LDW 280 M 17404-7(ON-3⅛-7)(SEE NOTE 3)
.125 (MIN)
.156(MIN)
.188 (MIN)
GB511K-08-3(2)
GN512H-08(2)
(ON-3⅛-7)
LDW280-23516-6(REF)(ON-3)
LDW280-53516-4(REF)(ON-7)
.375±.010
.437±.010
.375±.010
.375±.010
GB 511K-4-5 (4)
GN 512H-4 (4)
(ON-3⅛-7)
-3⅛-7)
LDW280-17695-12 (ON-3⅛-7)
LDW 280-17695-14 (ON-3⅛-7)
LDW 280-17696-14 (ON-3⅛-7)
MS20470DD4(5)(ON-3⅛-7)
LDW280-17624-12 (ON-3⅛-7)
LDW280-17624-14(ON-3⅛-7)
MS20470DD4(5)(ON-3⅛-7)
LDW 280-17613-13 (2)(ON-3⅛-7)
.188(MIN)
G (ZONE 2A SH 3)
LDW 280-17613-11(2)(ON-3⅛-7)
LDW280M17230-8 (ON-3⅛-7)
.188(MIN)
MS20470DD4(14)(ON-3⅛-7)
.214 (MIN)
DD4(16)(ON-3⅛-7)
MS20470 DD4(16)(ON-3⅛-7)
MS20470DD4(16)(ON-3⅛-7)
.188 (MIN)
LDW280-17624-16(ON-3⅛-7)
MS20470 DD5(10)(ON-3⅛-7)
G120-170-5-11A (ON-3⅛-7)
MS20470DD4 (30) (ON-3⅛-7)
(ZONE 3G SH 5)
U
+Z 15.340 (REF)
LDW 280-17699-13 (ON-3⅛-7)
MS20470DD4(2)(ON-3⅛-7)
.214MIN
.214MIN
U
L
L (ZONE 8J SH5)
X163.160 (REF)
X 156.075 (REF)
X 148.990 (REF)
X 138.193 (REF)
X 135.198 (REF)
LDW280-17699-20(ON-3⅛-7)
MS20470 DD5 (16)(ON-3⅛-7)
71
X142.00(REF)
X 141.188 (REF)
LDW280M17418-1 (REF)
MS20470 DD5 (12) (ON-3⅛-7)
MS20470DD5(12)(ON-3⅛-7)
LDW280-17429-13(ON-3⅛-7)
NAS1097DD5(6)(ON-3⅛-7)
CSK LDW280-17154-12
MS20470DD5(5)(ON-3⅛-7)
W
+Z5.525 (REF)
MS20470AD4(16) (ON-1⅛-5)
MS20470 DD5 (2)(ON-1⅛-5)
N
PHOTO BUTT LINE
LDW280-17150-12 (ON-1⅛-5)
LDW280-17341-13 (ON-3⅛-7)
(ON-3⅛-7)
MS20470DD5 (7)(ON-1⅛-5)
W (ZONE 3H SH 5)
MS20470AD4(8)(ON-1⅛-5)
N
MS20470DD5(7)(ON-3⅛-7)
(ZONE 5G SH 5)
LDW280-17429-11(REF)
5
10 TO PHOTO BUTT LINE ON SH 3
GR501A-4H(2)(ON-1⅛-5)
CSK NS LDW280M17136-5
(SEE NOTE 9)
COORDINATE WITH LDW280-23900 INSTL
LDW280M17136-5(REF)
TEMP BUTT LINE
-Z0.193 (REF)
LOWER DECK REFERENCE PLANE
X131.140 (REF)
(SEE NOTE 3)
X 156.015 (REF)
80
30
6
5
4
3
2

02/03

NAS 9-1100

DE IDENT NO 26512
DW280-52524 SH 4

CODE IDENT NO 26512
LDW280-52524 SH 4

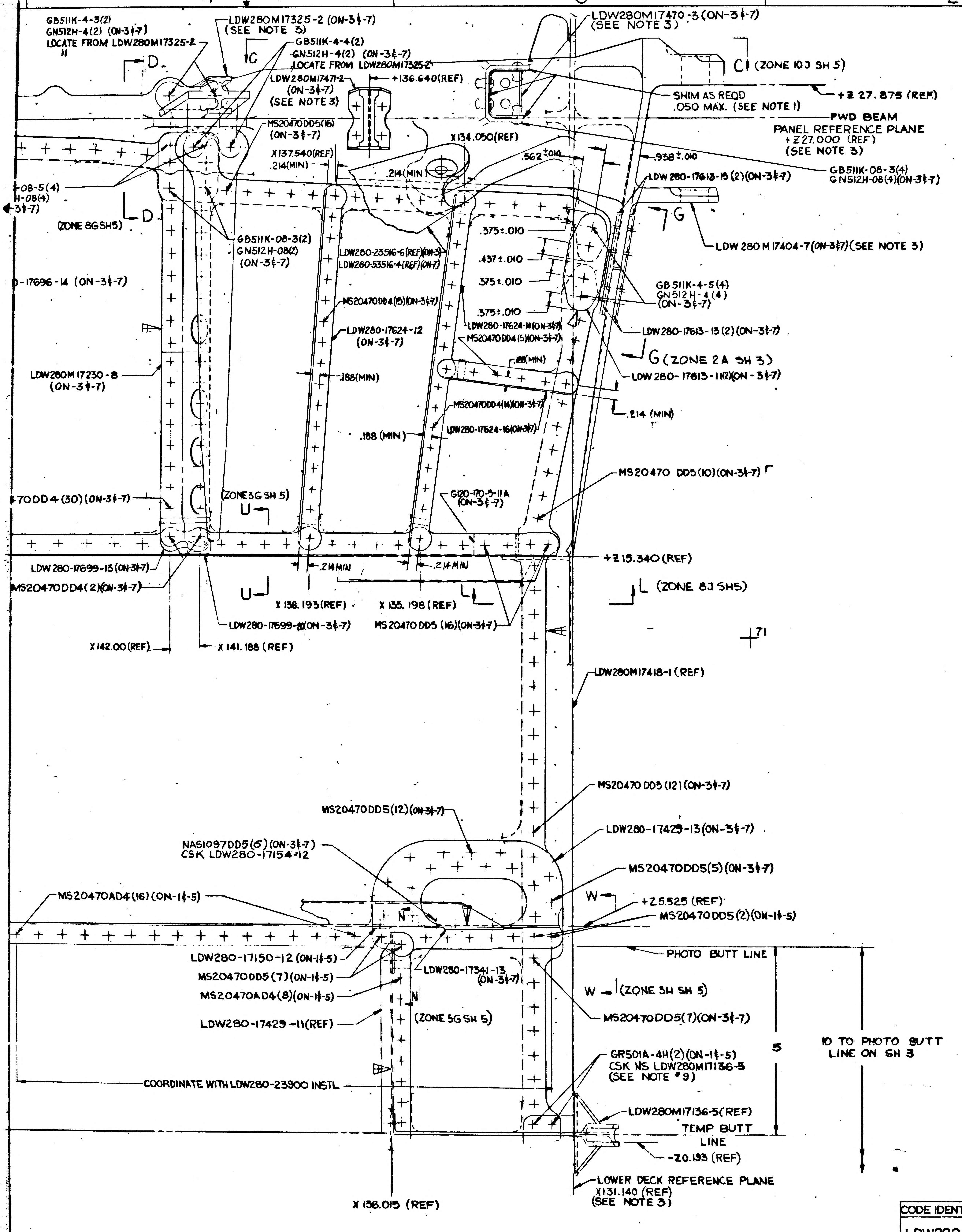
GB511K-4-3(2)
GN512H-4(2) (ON-3½-7)
LOCATE FROM LDW280M17325-2
LDW280M17325-2 (ON-3½-7)
(SEE NOTE 3)
GB511K-4-4(2)
GN512H-4(2) (ON-3½-7)
LOCATE FROM LDW280M17325-2
LDW280M17471-2
(ON-3½-7)
(SEE NOTE 3)
+136.640(REF)
LDW280M17470-3 (ON-3½-7)
(SEE NOTE 3)
C (ZONE 10J SH 5)
SHIM AS REQD
.050 MAX. (SEE NOTE 1)
+Z 27.875 (REF)
FWD BEAM
PANEL REFERENCE PLANE
+Z 27.000 (REF)
(SEE NOTE 3)
MS20470DD5(16)
(ON-3½-7)
X137.540(REF)
.214(MIN)
X134.050(REF)
.562±.010
.938±.010
.214(MIN)
GB511K-08-3(4)
GN512H-08(4)(ON-3½-7)
LDW280-17613-15(2)(ON-3½-7)
-08-5(4)
H-08(4)
-3½-7)
(ZONE 8G SH5)
D
G
LDW280M17404-7(ON-3½-7)(SEE NOTE 3)
GB511K-08-3(2)
GN512H-08(2)
(ON-3½-7)
.375±.010
.437±.010
.375±.010
.375±.010
LDW280-23516-6(REF)(ON-3)
LDW280-53516-4(REF)(ON-7)
-17696-14 (ON-3½-7)
MS20470DD4(5)(ON-3½-7)
LDW280-17624-14(ON-3½-7)
MS20470DD4(5)(ON-3½-7)
GB511K-4-5(4)
GN512H-4(4)
(ON-3½-7)
LDW280-17613-13(2)(ON-3½-7)
LDW280-17624-12
(ON-3½-7)
.188(MIN)
G (ZONE 2A SH 3)
LDW280-17613-11(2)(ON-3½-7)
LDW280M17230-8
(ON-3½-7)
.188(MIN)
MS20470DD4(14)(ON-3½-7)
.188 (MIN)
LDW280-17624-16(ON-3½-7)
.214 (MIN)
MS20470 DD5(10)(ON-3½-7)
-70DD4(30)(ON-3½-7)
(ZONE 3G SH 5)
U
G120-170-5-11A
(ON-3½-7)
+Z15.340 (REF)
LDW280-17699-13(ON-3½-7)
MS20470DD4(2)(ON-3½-7)
.214MIN
.214MIN
U
X138.193(REF)
X135.198(REF)
L
L (ZONE 8J SH5)
LDW280-17699-20(ON-3½-7)
MS20470DD5(16)(ON-3½-7)
X142.00(REF)
X141.188 (REF)
+71
LDW280M17418-1 (REF)
MS20470 DD5(12)(ON-3½-7)
MS20470DD5(12)(ON-3½-7)
LDW280-17429-13(ON-3½-7)
NAS1097DD5(6)(ON-3½-7)
CSK LDW280-17154-12
MS20470DD5(5)(ON-3½-7)
MS20470AD4(16)(ON-1½-5)
W
+Z5.525 (REF)
MS20470DD5(2)(ON-1½-5)
N
PHOTO BUTT LINE
LDW280-17150-12 (ON-1½-5)
LDW280-17341-13
(ON-3½-7)
MS20470DD5(7)(ON-1½-5)
MS20470AD4(8)(ON-1½-5)
W (ZONE 3H SH 5)
N
LDW280-17429-11(REF)
(ZONE 5G SH 5)
MS20470DD5(7)(ON-3½-7)
5
10 TO PHOTO BUTT
LINE ON SH 3
COORDINATE WITH LDW280-23900 INSTL
GR501A-4H(2)(ON-1½-5)
CSK NS LDW280M17136-5
(SEE NOTE #9)
LDW280M17136-5(REF)
TEMP BUTT
LINE
-Z0.133 (REF)
LOWER DECK REFERENCE PLANE
X131.140 (REF)
(SEE NOTE 3)
X138.015 (REF)
80
30

4 3 2 1

MANUFACTURING OPERATIONS
UNLESS OTHERWISE SPECIFIED
NOTES CHECKED ✓ APPLY TO THIS DWG.

PART NUMBER AND ALL OTHER MARKINGS IN REGION MARKED ☒ USE BOTH SIDES IF NECESSARY.
FILLET AND INSIDE CORNER RADII TOLERANCES .016R TO .062R ± .010 .063R TO .250R ± .015 OVER .250R ± .030
DEPTH SHOWN FOR TAPPED HOLES IS FULL THDS. 2-3 IMP. THDS. BEYOND PERMISSIBLE
EXTERNAL THREAD LENGTH SHOWN INCLUDES 2 IMPERFECT THREADS MAX.
DO NOT CADMIUM PLATE & PAINT HOLES OR SURFACES MARKED WITH DOUBLE ASTERISK.
MISMATCH STEP OF ± .005 PERMISSIBLE DUE TO CHANGE OF CUTTERS AT INSIDE INTERSECTING SURFACES.
DIAMETERS MARKED MUST BE CONCENTRIC WITHIN FULL INDICATOR READING.
HOLES MUST BE KEPT FREE OF CHROME PLATING SOLUTION.
ALL DIMENSIONS SHOWN TO BE MET AFTER CADMIUM PLATING. THICKNESS OF PLATE .0003 MIN TO .0005 MAX. MIN THICKNESS TO BE .0002 ON THREADED AREAS. NO ALLOWANCES FOR PLATING IN HOLES
125 SURFACE ROUGHNESS INCLUDING REAMED HOLES PER MIL-STD-10
250 FOR ALL DRILLED HOLES
REMOVE ALL BURRS. BREAK ALL EDGES .015-.031
INSPECTION INFORMATION MINIMUM PERMISSIBLE AVERAGE EDGE DISTANCE MARKED IS
SYMBOL √ DENOTES SURFACE TO BE MACHINED
UNLESS OTHERWISE SPECIFIED TOLERANCE ON FLANGES IS ± 1/32
LENGTHS OF AN, NAS & MS AL ALY RIVETS SHORTER THAN 1 INCH ARE NOT SPECIFIED
TOLERANCE ON LOFTED DELINEATIONS IS

DWG SIZE 34x106

PRINTING INFO ONLY

FULL SHEET AREA (34x106) = 27.0

PRINT TRIM LINE

F

E

D

C

LDW280-52524

LDW280-52524

03703

NAS 9-1100

CODE IDENT NO 26512

LDW280-52524 SH 4

	GRUMMAN AIRCRAFT ENGRG CORP. BETHPAGE, L. I., NEW YORK			
LM	SIZE J	CODE IDENT NO. 26512	LDW280-52524	C
MODEL OR END ITEM	SCALE FULL		SHEET 4.00	

FOR PHOTO REPRODUCTION

THIS IS AN ORIGINAL DWG 3 FRAMES

ENG 73-7 6-64

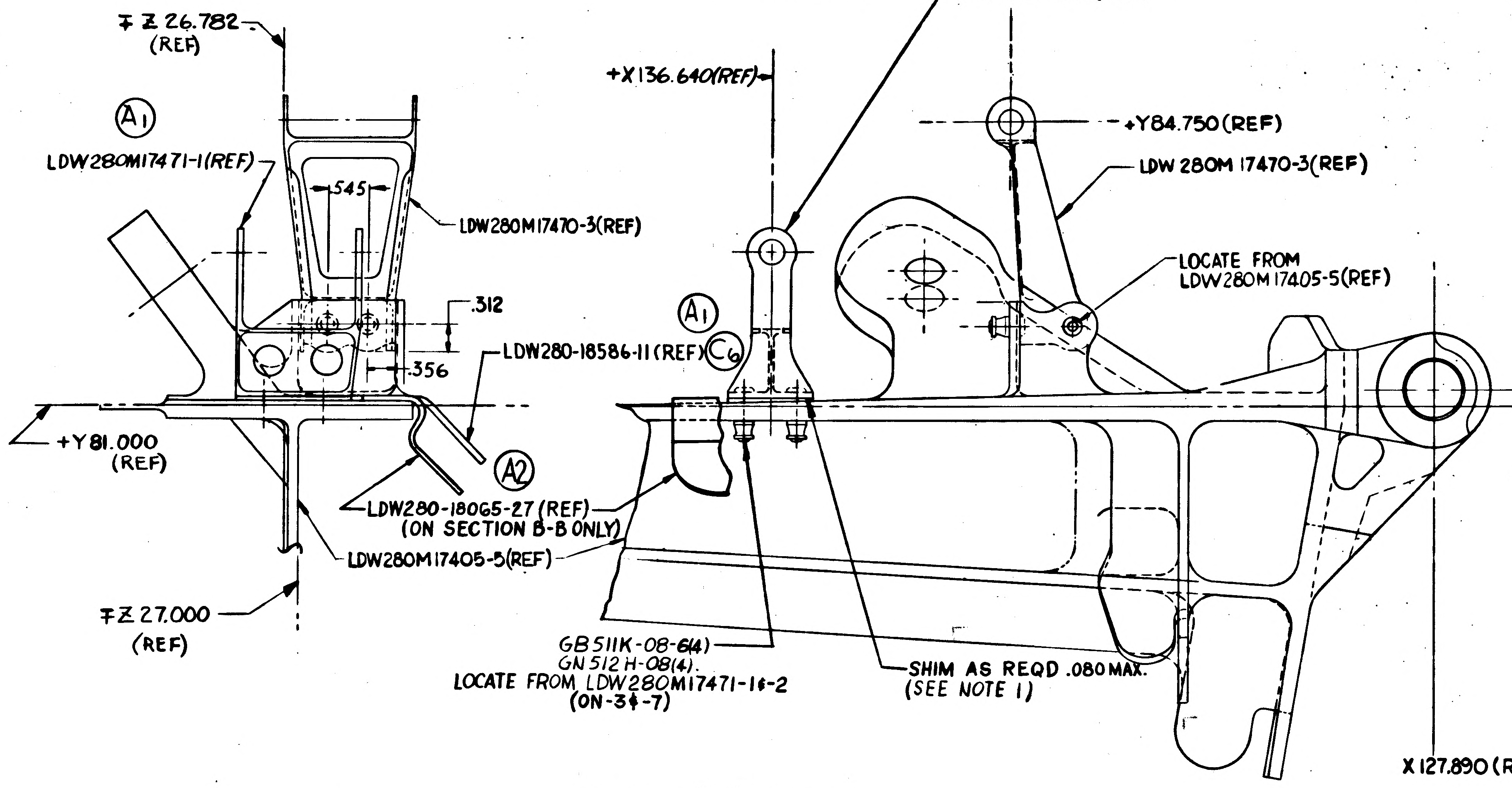
∓Z 26.782 (REF)
(A1)
LDW280M17471-1(REF)
.545
LDW280M17470-3(REF)
.312
.356
LDW280-18586-11(REF)
(C6)
(A1)
(A2)
+Y81.000 (REF)
LDW280-18065-27 (REF) (ON SECTION B-B ONLY)
LDW280M17405-5(REF)
∓Z 27.000 (REF)
LDW280M17471-1(REF)
X 133.483 (REF)
+X136.640(REF)
+Y84.750(REF)
LDW 280M 17470-3(REF)
LOCATE FROM LDW280M 17405-5(REF)
+Y81.212 (REF)
+Y 81.000(REF)
GB511K-08-6(4)
GN 512 H-08(4).
LOCATE FROM LDW280M17471-1&-2 (ON-3&-7)
SHIM AS REQD .080 MAX. (SEE NOTE 1)
X 127.890 (REF)

VIEW B-B (SHOWN)
(ZONE 3A SH.NO 3)
VIEW C-C (OPP. EXCEPT AS SHOWN)
(ZONE 3F SH.NO 4)

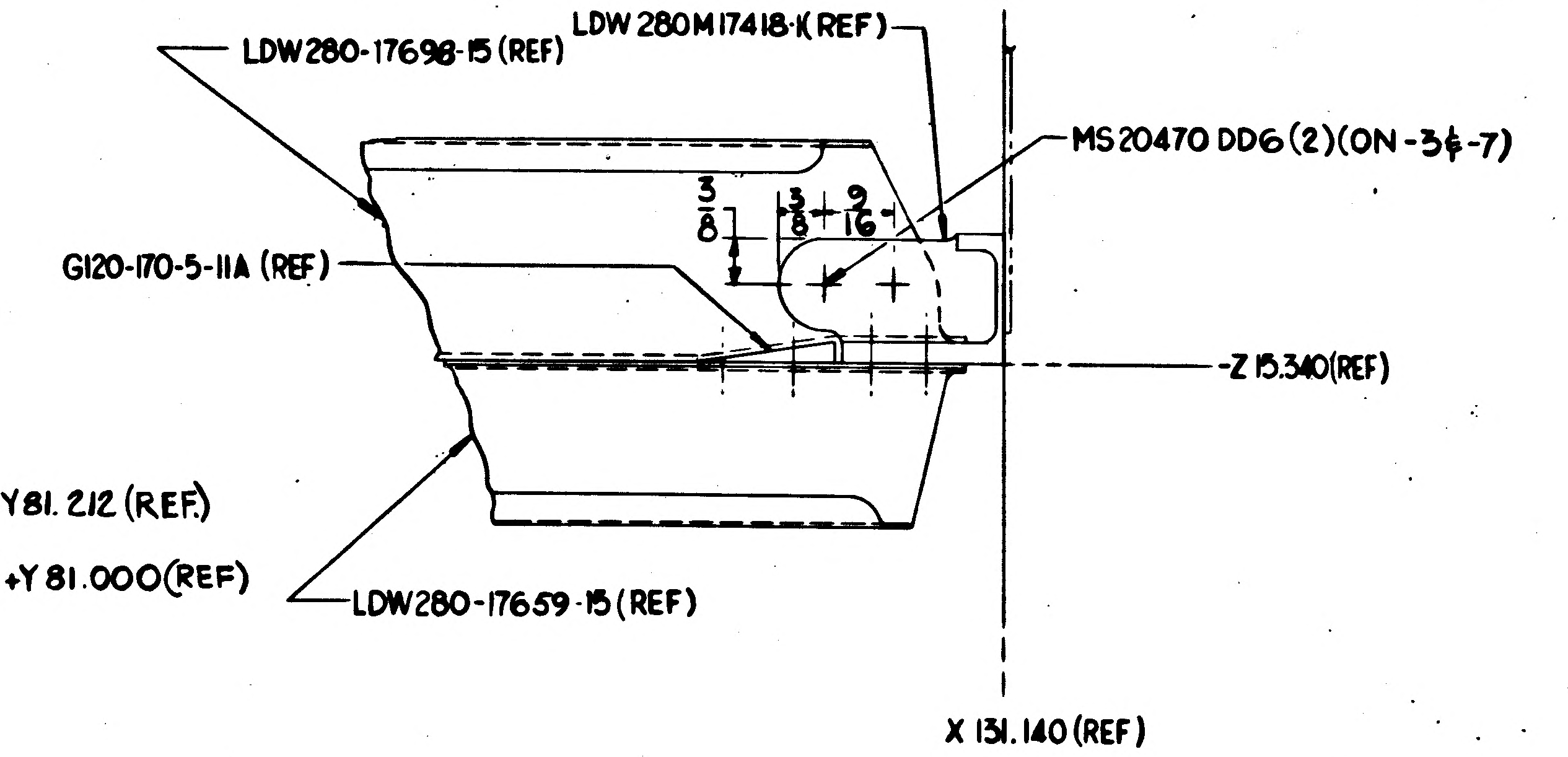
LDW280-17698-15 (REF)
LDW 280M17418-1(REF)
MS20470 DD6(2)(ON-3&-7)
3/8
3/8
9/16
G120-170-5-11A (REF)
-Z 15.340(REF)
LDW280-17659-15 (REF)
X 131.140 (REF)

SECTION K-K (SHOWN)
(ZONE 3B SH. NO 3)
SECTION L-L (OPP)
(ZONE 3E SH. NO.4)

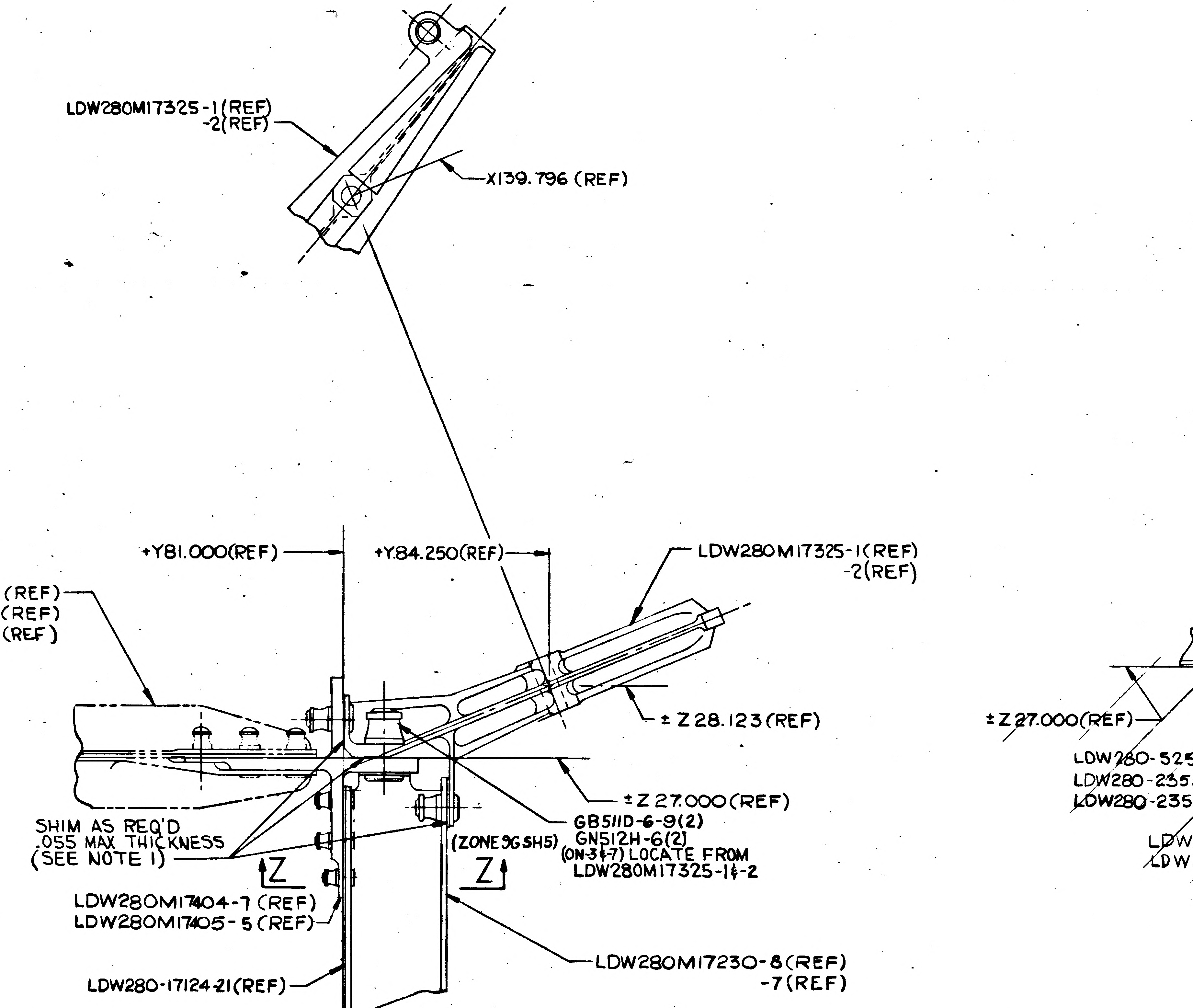
LDW280M17325-1(REF)
-2(REF)
X139.796 (REF)
+Y81.000(REF)
+Y84.250(REF)
LDW280M17325-1(REF)
-2(REF)
LDW280-23528 (REF)
LDW280-23531 (REF)
LDW280-52528(REF)
±Z 28.123(REF)
±Z 27.000(REF)
SHIM AS REQ'D .055 MAX THICKNESS (SEE NOTE 1)
GB511D-6-9(2)
GN512H-6(2)
(ON-3&-7) LOCATE FROM LDW280M17325-1&-2
Z
(ZONE 9G SH5)
Z
LDW280M17404-7 (REF)
LDW280M17405-5 (REF)
LDW280-17124-21(REF)
LDW280M17230-8(REF)
-7(REF)

SECTION D-D (SHOWN)
(ZONE 4F SH.NO 4)
SECTION E-E (OPP)
(ZONE 4A SH.NO 3

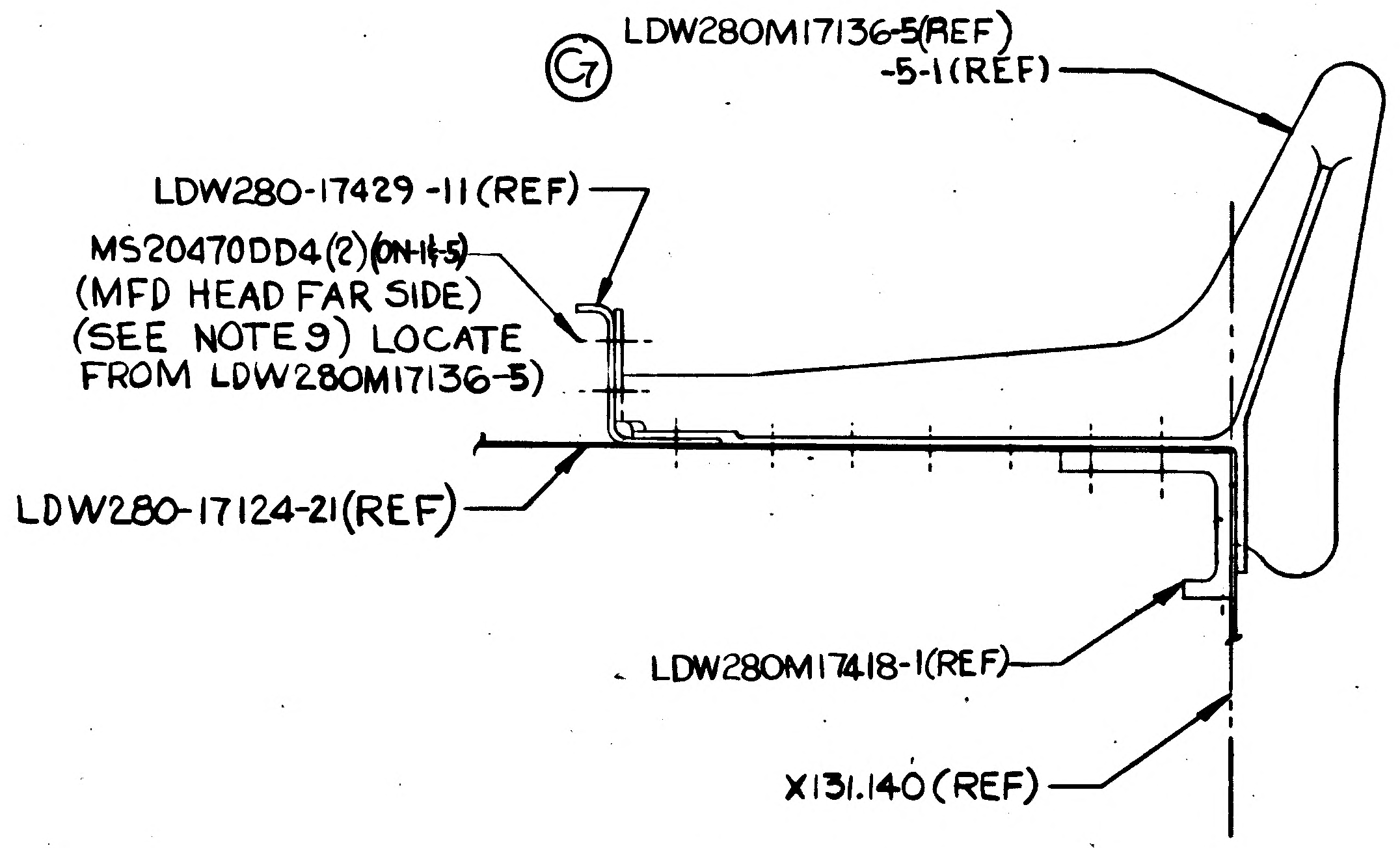
(G7)
LDW280M17136-5(REF)
-5-1(REF)
LDW280-17429 -11 (REF)
MS20470DD4(2)~~(ON-1-5)~~
(MFD HEAD FAR SIDE)
(SEE NOTE 9) LOCATE
FROM LDW280M17136-5)
LDW280-17124-21(REF)
LDW280M17418-1(REF)
X131.140 (REF)

SECTION A-A
(ZONE 3C SH. NO 3)

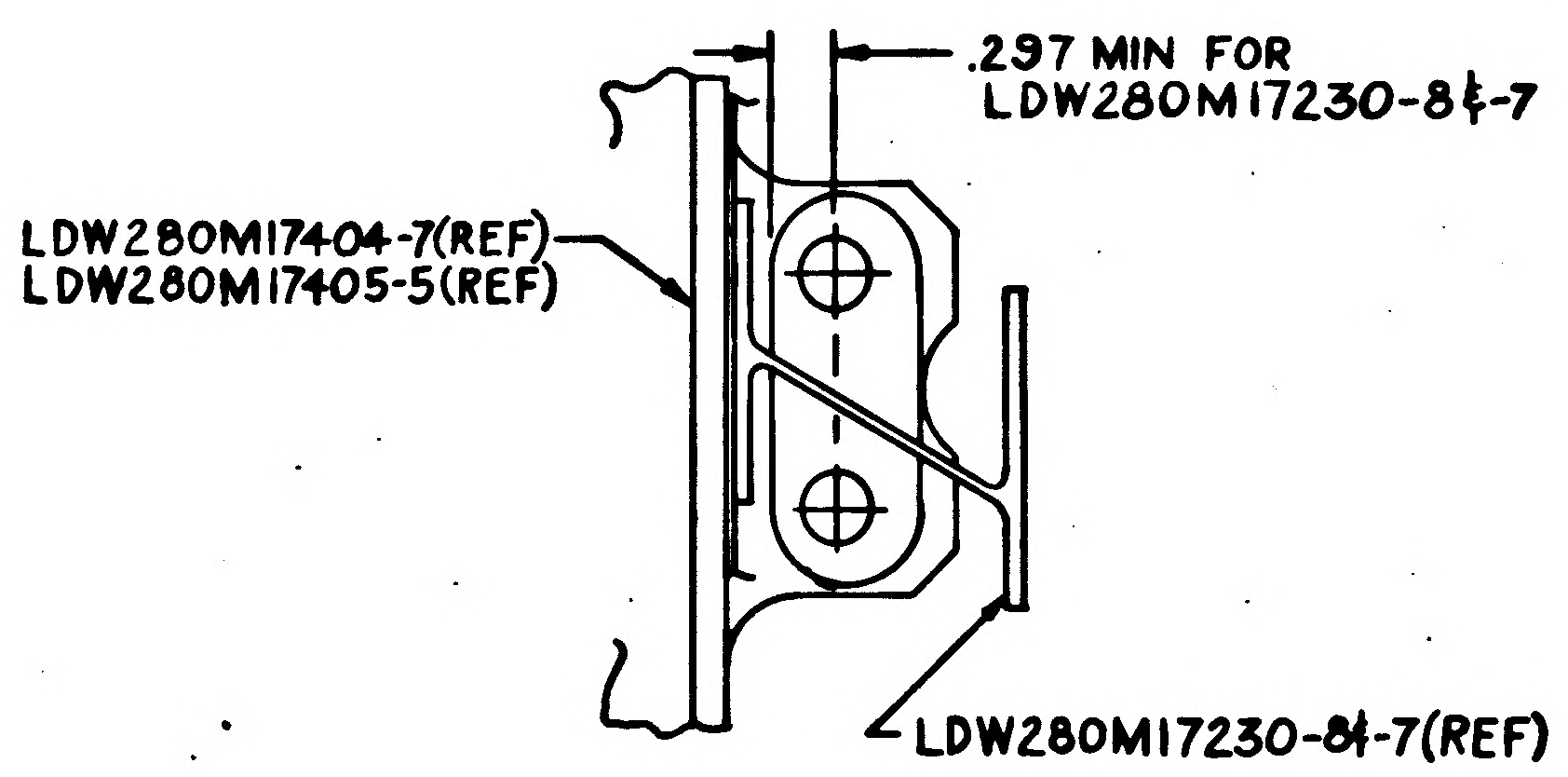
.297 MIN FOR LDW280M17230-8&-7
LDW280M17404-7(REF)
LDW280M17405-5(REF)
LDW280M17230-8&-7(REF)

SECTION Z-Z (A5)
(ZONE 7G SH NO 5)

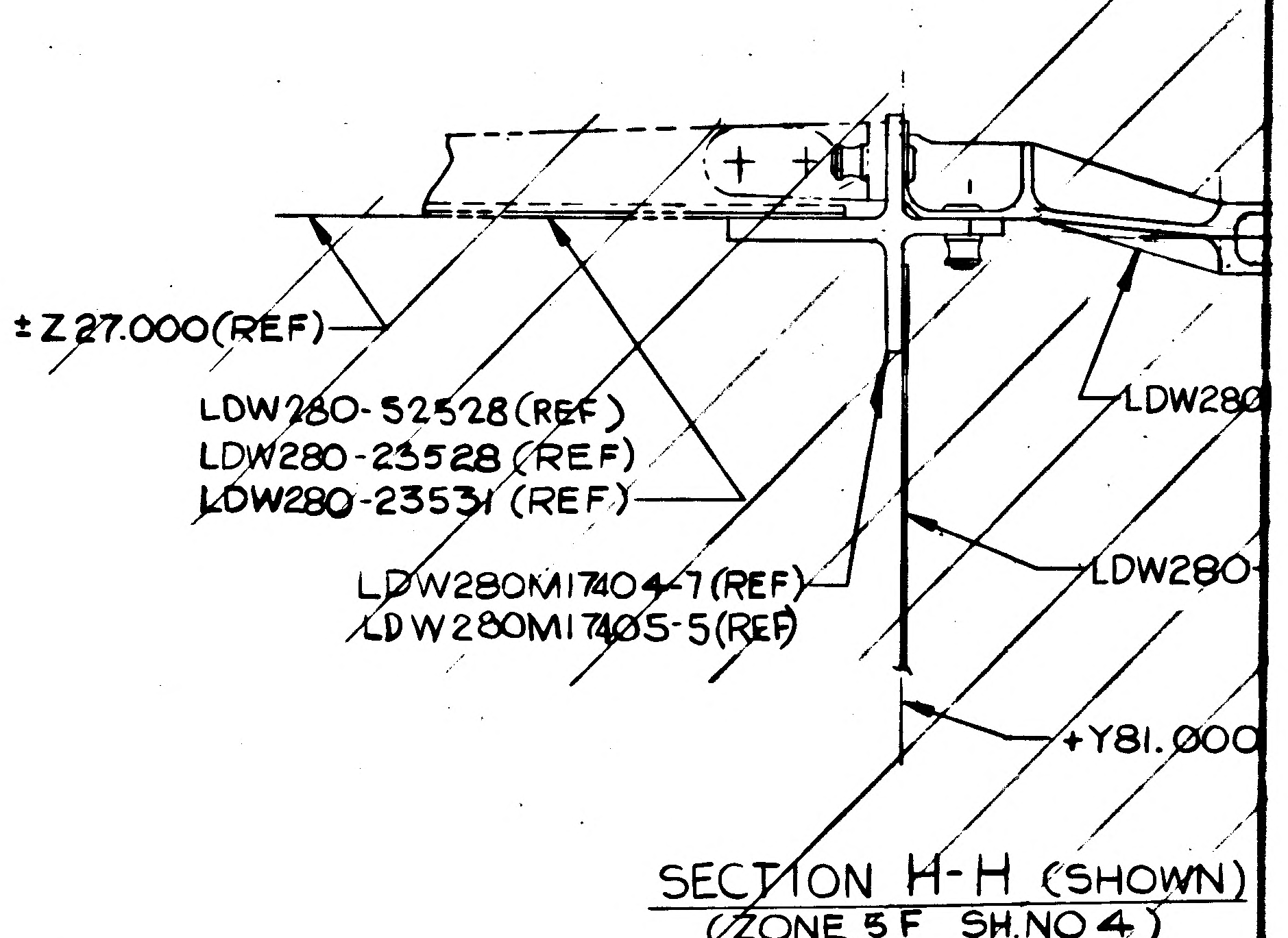
±Z 27.000(REF)
LDW280-52528(REF)
LDW280-23528 (REF)
LDW280-23531 (REF)
LDW280M17404-7(REF)
LDW280M17405-5(REF)
LDW280
LDW280-
+Y81.000

SECTION H-H (SHOWN)
(ZONE 5F SH.NO 4)
SECTION J-J (OPP)
(ZONE 5A SH.NO 3)

(C1)

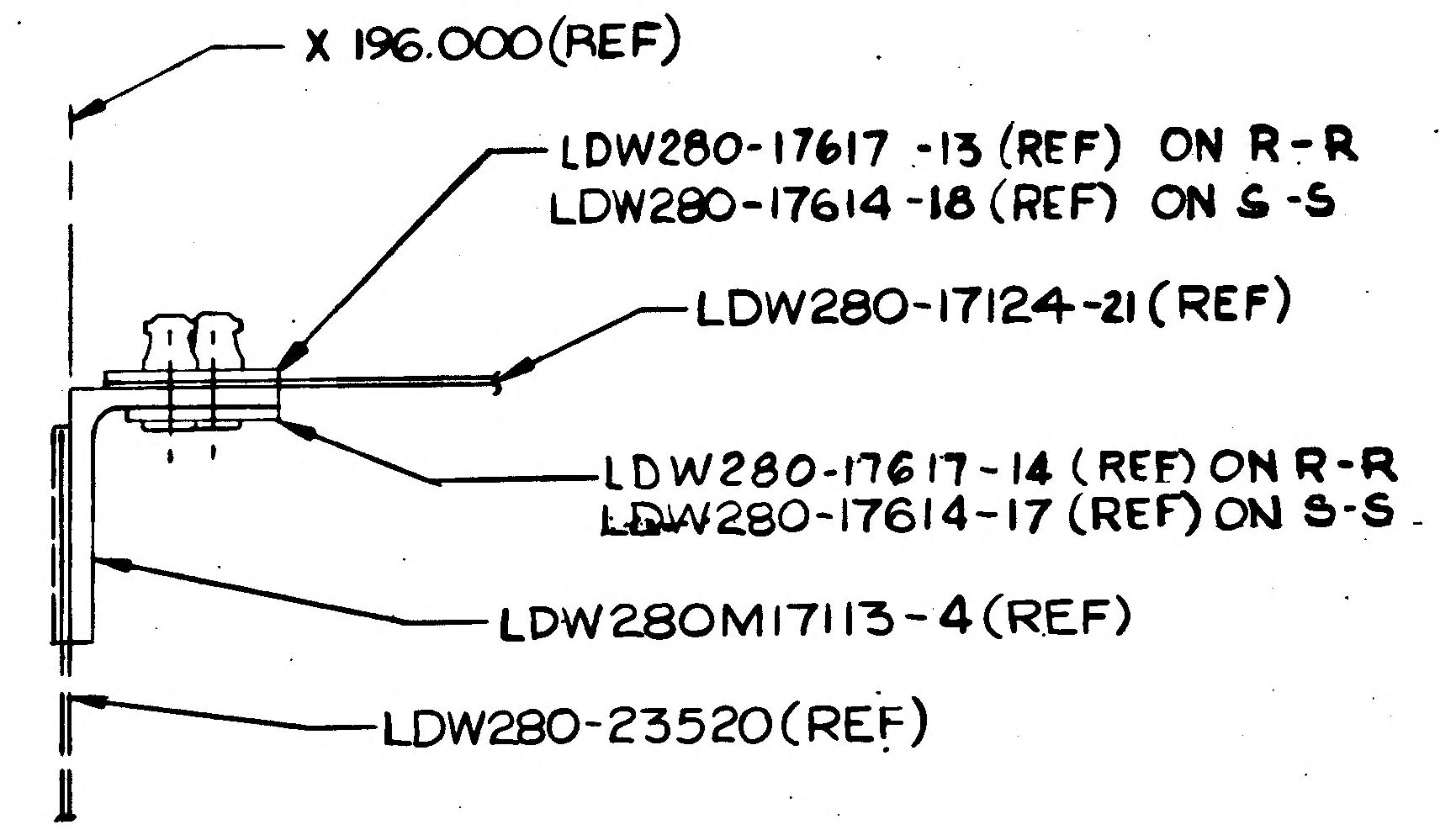
X 196.000(REF)
LDW280-17617 -13 (REF) ON R-R
LDW280-17614 -18 (REF) ON S-S
LDW280-17124-21 (REF)
LDW280-17617-14 (REF) ON R-R
LDW280-17614-17 (REF) ON S-S
LDW280M17113-4(REF)
LDW280-23520(REF)

SECTION R-R (SHOWN)
(ZONE 9A SH NO. 3)

SECTION S-S (OPP)
(ZONE 9F SH.NO.4)

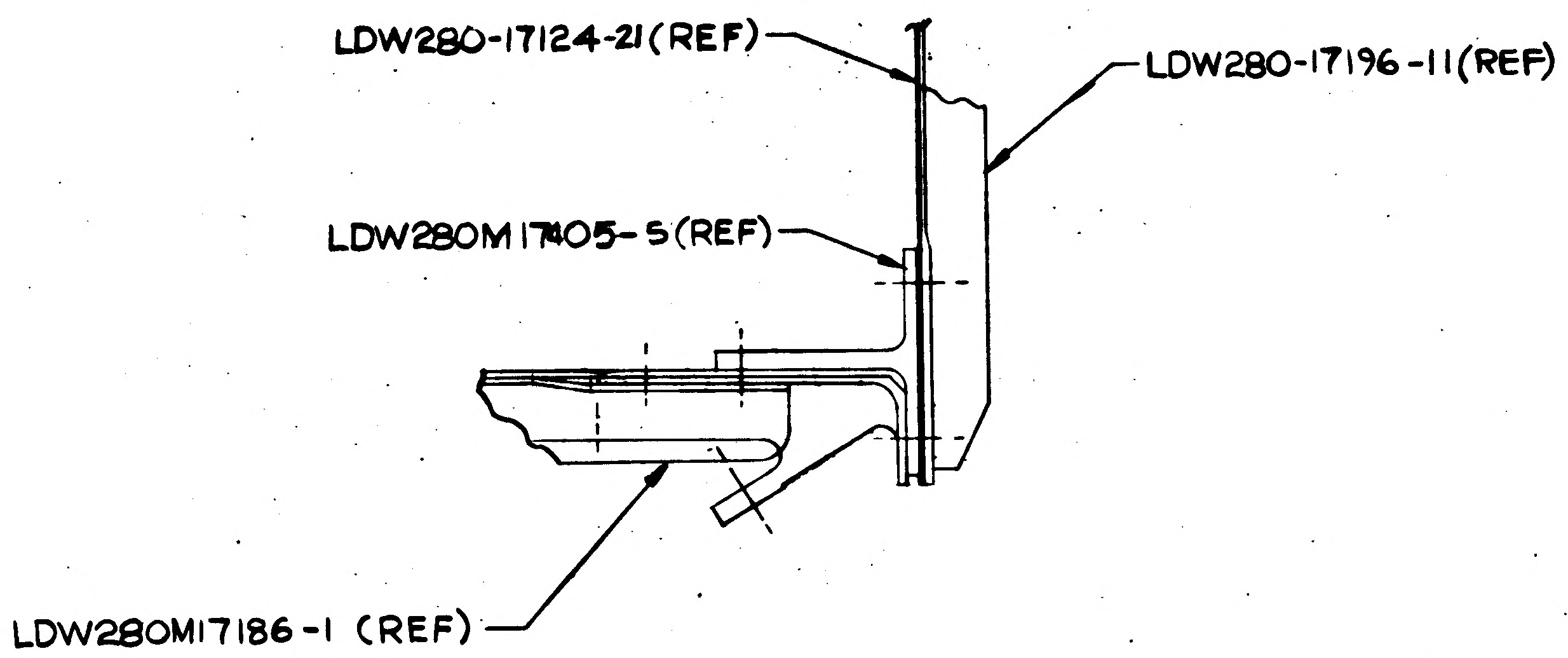
LDW280-17124-21(REF)
LDW280-17196-11(REF)
LDW280M17405-5(REF)
LDW280M17186-1 (REF)

SECTION Y-Y
(ZONE 7A SH NO 3)

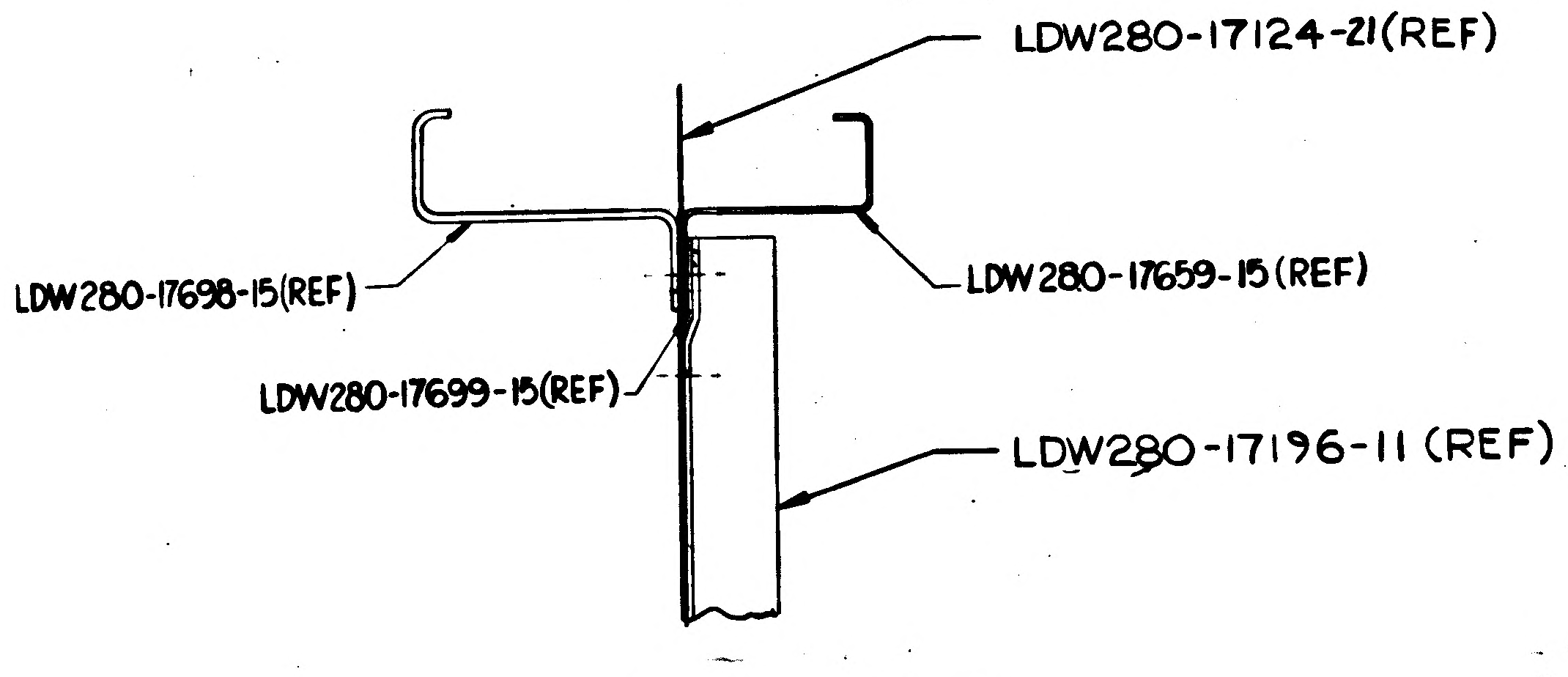
LDW280-17124-21(REF)
LDW280-17698-15(REF)
LDW280-17659-15(REF)
LDW280-17699-15(REF)
LDW280-17196-11 (REF)

SECTION P-P
(ZONE 7B SH.NO 3)

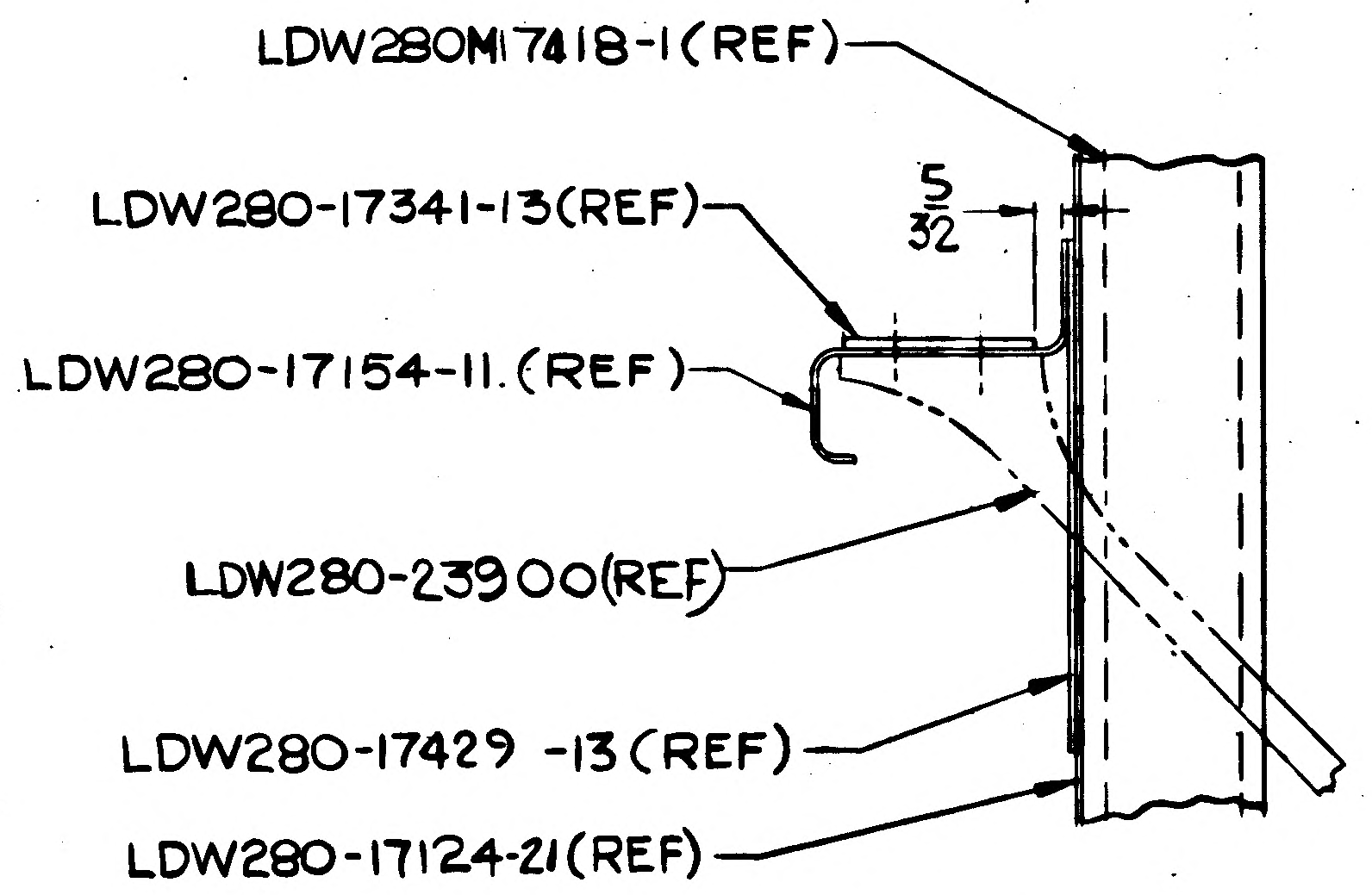
LDW280M17418-1(REF)
LDW280-17341-13(REF)
5/32
LDW280-17154-11.(REF)
LDW280-23900(REF)
LDW280-17429 -13(REF)
LDW280-17124-21(REF)

VIEW V-V (SHOWN)
(ZONE 3C SH NO 3)

VIEW W-W (OPP)
(ZONE 3D SH NO 4

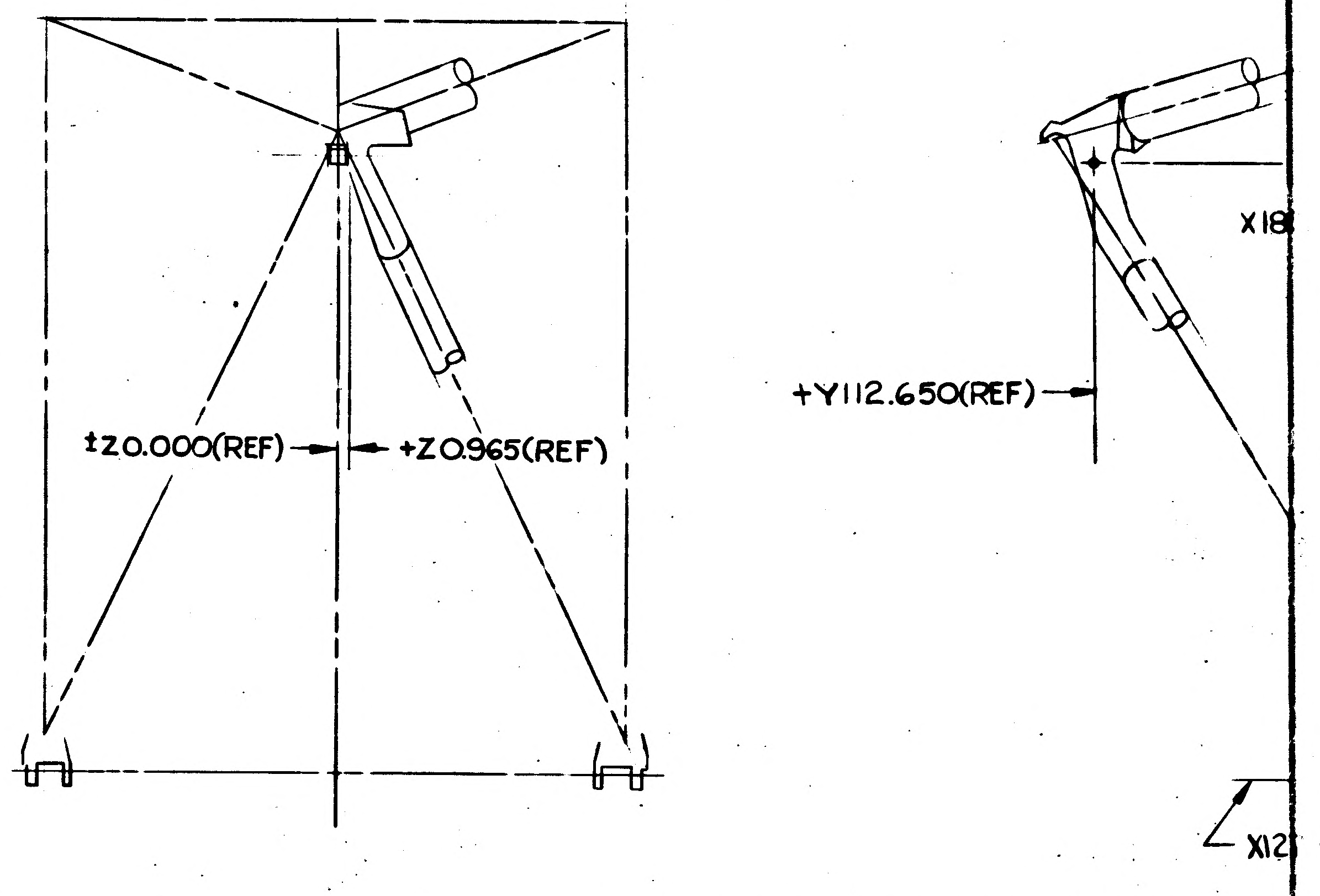
±Z0.000(REF)
+Z0.965(REF)
+Y112.650(REF)
X18
X12

ENGR. INFO FOR OUTRIGGER ASSY
(SEE NOTE 3)
SCALE: NONE

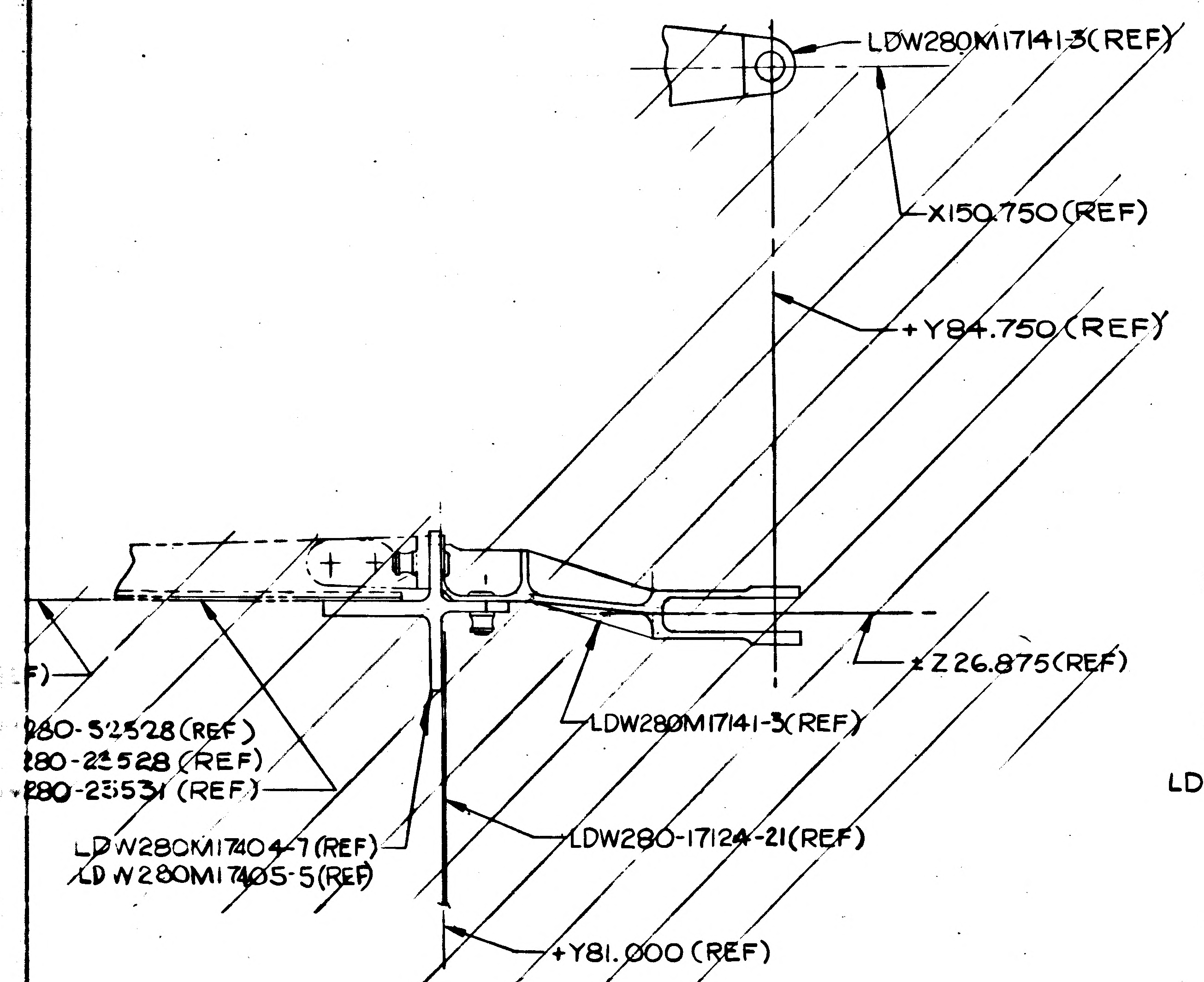
LDW280M17141-3(REF)
X150.750(REF)
+Y84.750(REF)
±Z26.875(REF)
F)
280-52528 (REF)
280-23528 (REF)
280-23531 (REF)
LDW280M17141-3(REF)
LDW280M17404-7(REF)
LDW280M17405-5(REF)
LDW280-17124-21(REF)
+Y81.000 (REF)

SECTION H-H (SHOWN)
(ZONE 5F SH.NO 4)

SECTION J-J (OPP)
(ZONE 5A SH.NO 3)

Ⓒ1

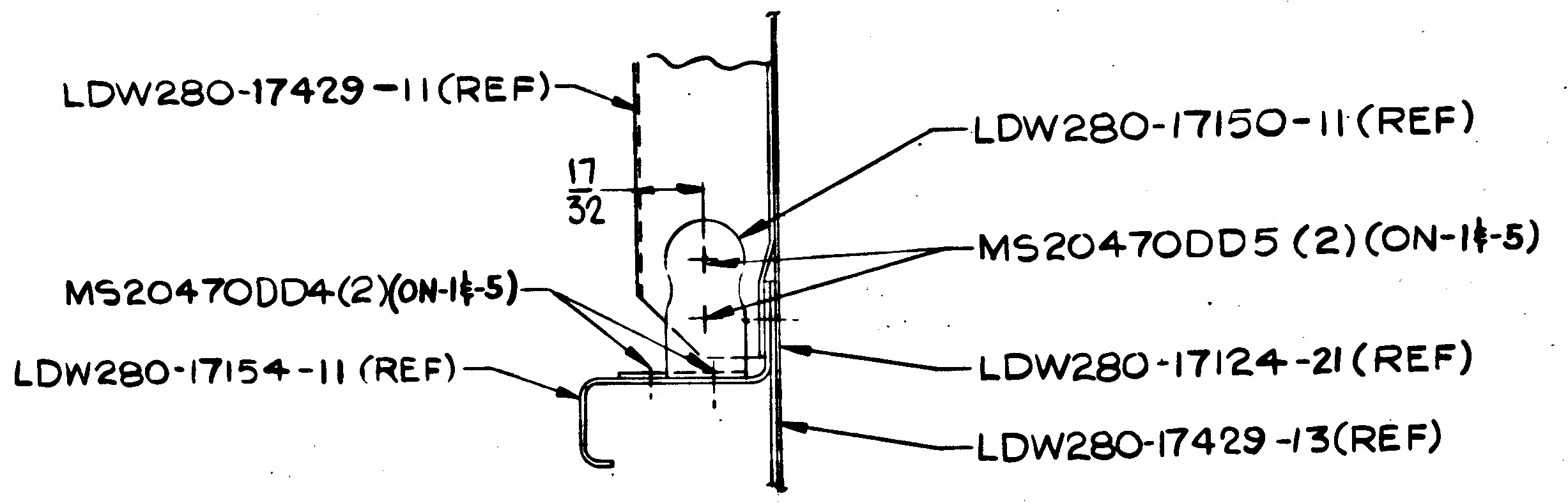
LDW280-17429-11(REF)
17/32
LDW280-17150-11(REF)
MS20470DD5 (2) (ON-1⁵-5)
MS20470DD4(2)(ON-1⁵-5)
LDW280-17154-11 (REF)
LDW280-17124-21 (REF)
LDW280-17429-13(REF)

SECTION M-M (SHOWN)
(ZONE 3C SH.NO 3)

SECTION N-N (OPP)
(ZONE 4D SH.NO 4)

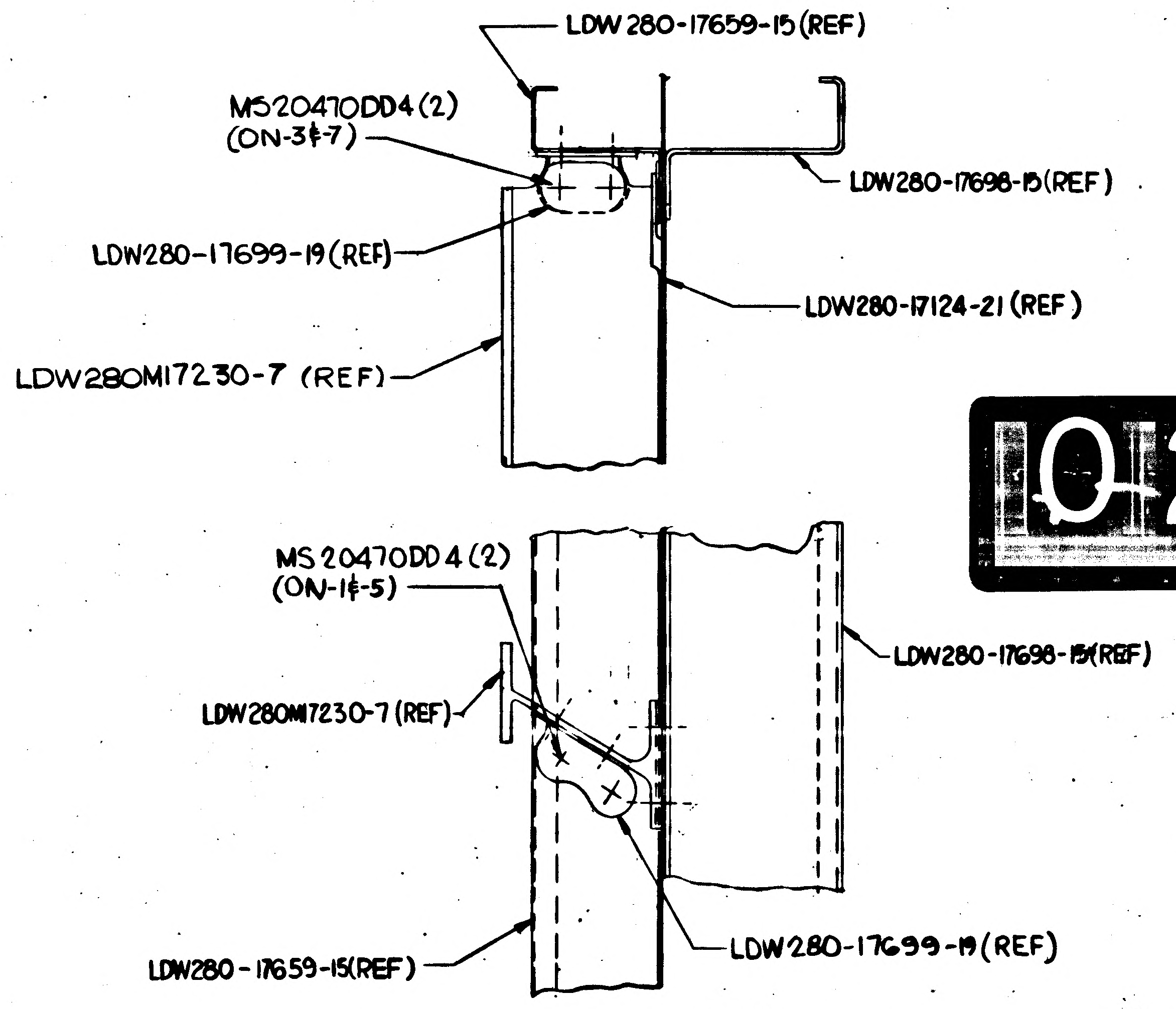
LDW280-17659-15(REF)
MS20470DD4(2)
(ON-3⁵-7)
LDW280-17698-15(REF)
LDW280-17699-19(REF)
LDW280-17124-21 (REF)
LDW280M17230-7 (REF)
MS20470DD4 (2)
(ON-1⁵-5)
LDW280-17698-15(REF)
LDW280M17230-7 (REF)
LDW280-17659-15(REF)
LDW280-17699-19(REF)

SECTION T-T SHOWN (ZONE 4B SH 3)
SECTION U-U OPP (ZONE 4E SH 4)

02/03 NAS 9-1100

7 -13 (REF) ON R-R
4 -18 (REF) ON S-S
80-17124-21 (REF)
17617-14 (REF) ON R-R
17614-17 (REF) ON S-S
3-4 (REF)
EF)

LDW280-17124-21(REF)
LDW280-17659-15(REF)
LDW280-17196-11 (REF)
P
O 3)

LDW280-17150-11 (REF)
MS20470DD5 (2) (ON-1⅛-5)
LDW280-17124-21 (REF)
LDW280-17429 -13(REF)
N)

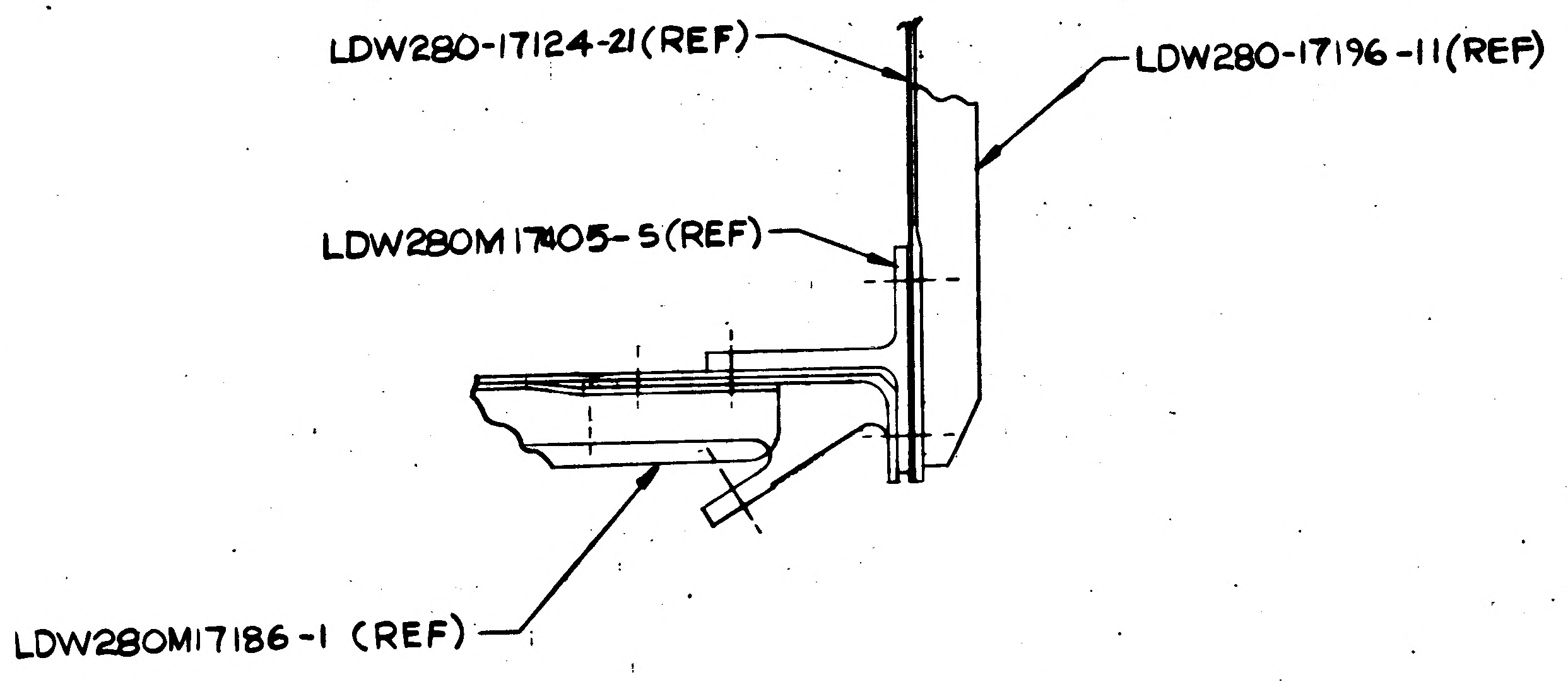

LDW280-17124-21(REF)
LDW280-17196-11(REF)
LDW280M17405-5(REF)
LDW280M17186-1 (REF)

SECTION Y-Y
(ZONE 7A SH NO 3)

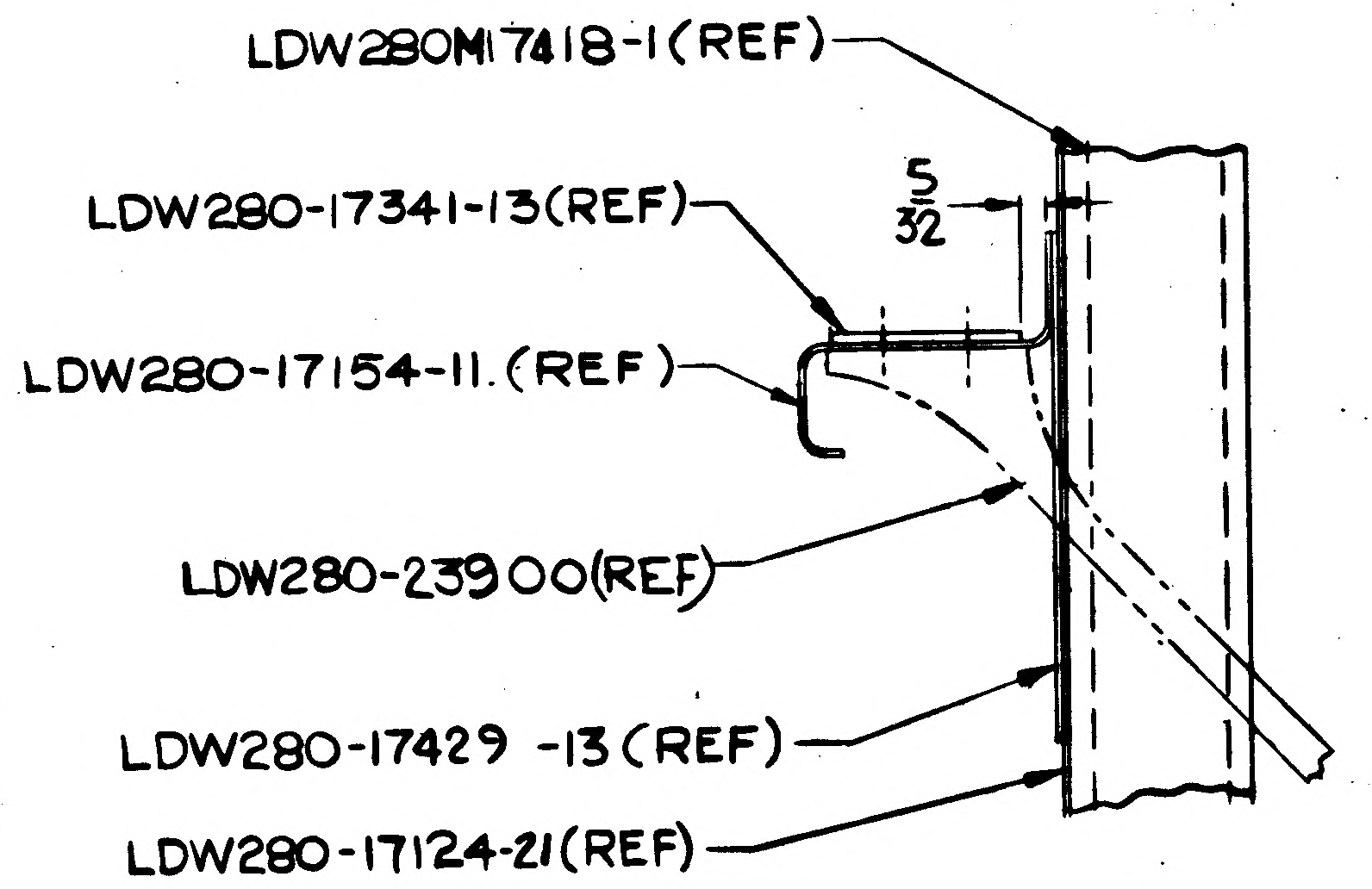

LDW280M17418-1(REF)
LDW280-17341-13(REF)
5/32
LDW280-17154-11.(REF)
LDW280-23900(REF)
LDW280-17429 -13 (REF)
LDW280-17124-21(REF)

VIEW V-V (SHOWN)
(ZONE 3C SH NO 3)
VIEW W-W (OPP)
(ZONE 3D SH NO 4)

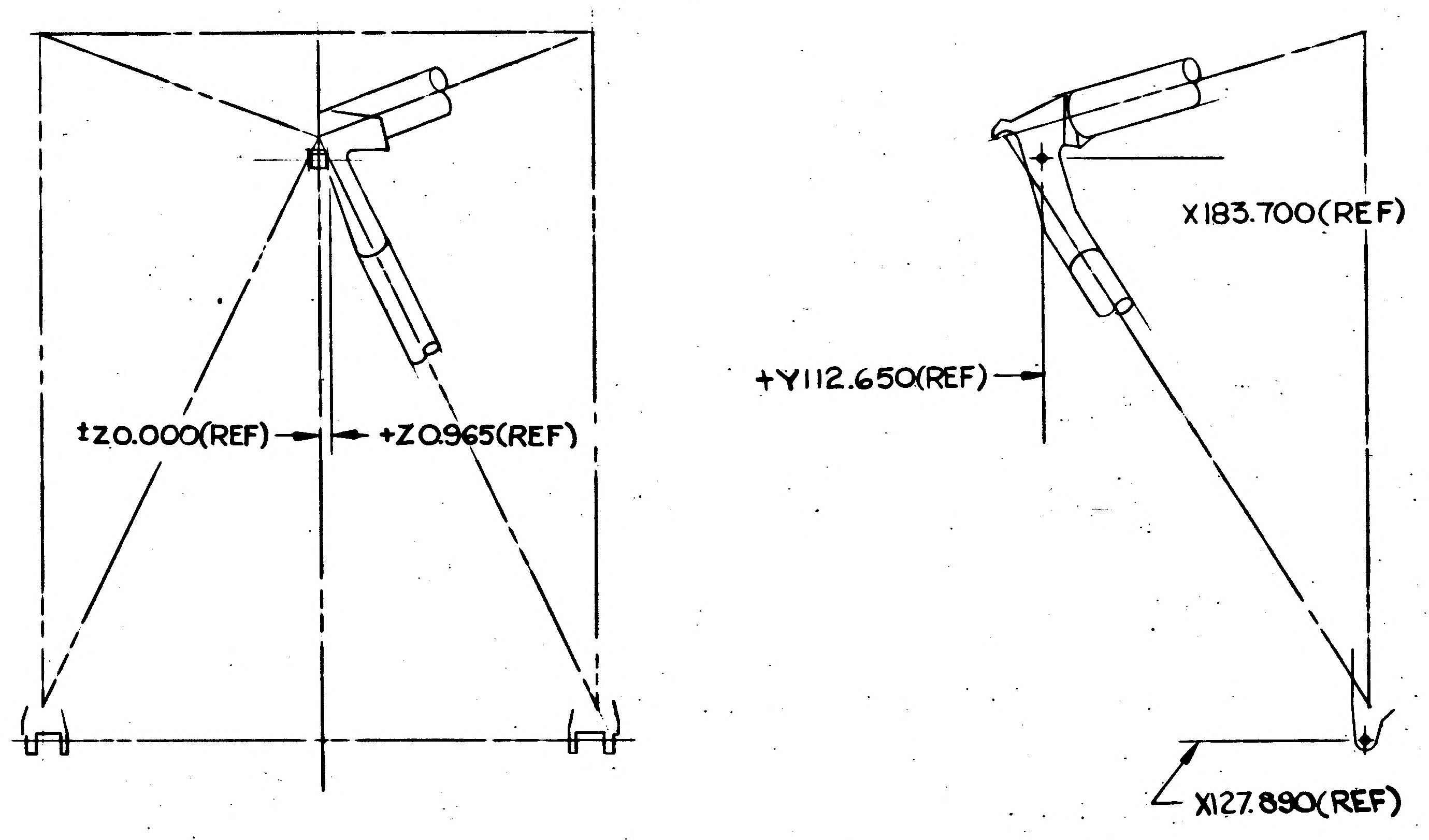

±Z0.000(REF)
+Z0.965(REF)
X183.700(REF)
+Y112.650(REF)
X127.890(REF)

ENGR. INFO FOR OUTRIGGER ASSY
(SEE NOTE 3)
SCALE: NONE

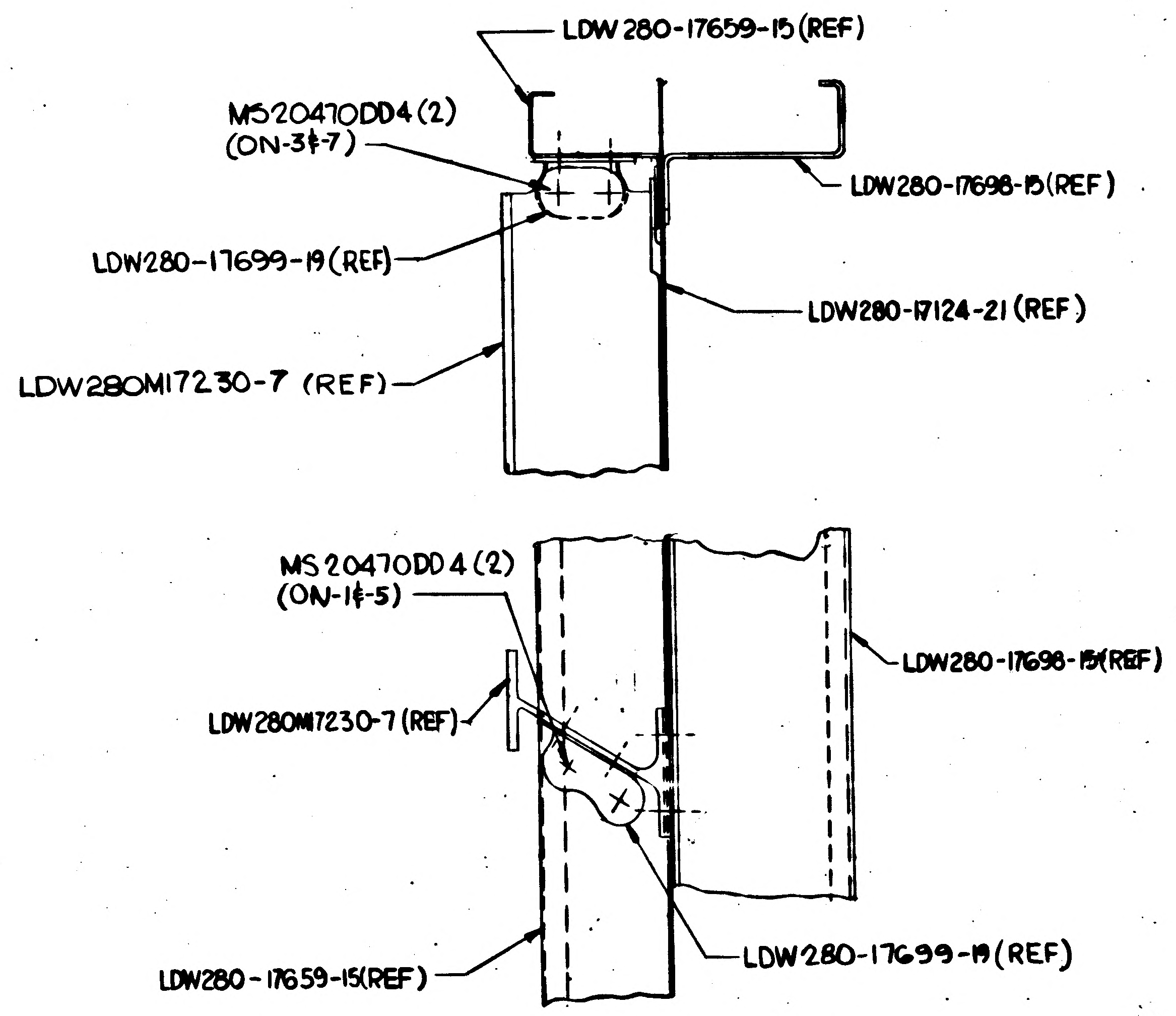

LDW280-17659-15(REF)
MS20470DD4(2)
(ON-3⅛-7)
LDW280-17698-15(REF)
LDW280-17699-19(REF)
LDW280-17124-21 (REF)
LDW280M17230-7 (REF)
MS20470DD4 (2)
(ON-1⅛-5)
LDW280-17698-15(REF)
LDW280M17230-7 (REF)
LDW280-17659-15(REF)
LDW280-17699-19 (REF)

SECTION T-T SHOWN (ZONE 4B SH 3)
SECTION U-U OPP (ZONE 4E SH 4)

MANUFACTURING OPERATIONS
UNLESS OTHERWISE SPECIFIED
NOTES CHECKED ✓ APPLY TO THIS DWG.

PART NUMBER AND ALL OTHER MARKINGS IN REGION MARKED ⊠ USE BOTH SIDES IF NECESSARY.

FILLET AND INSIDE CORNER RADII TOLERANCES
.016R TO .062R ± .010
.063R TO .250R ± .015
OVER .250R ± .030

DEPTH SHOWN FOR TAPPED HOLES IS FULL THDS. 2-3 IMP. THDS. BEYOND PERMISSIBLE

EXTERNAL THREAD LENGTH SHOWN INCLUDES 2 IMPERFECT THREADS MAX.

DO NOT CADMIUM PLATE & PAINT HOLES OR SURFACES MARKED WITH DOUBLE ASTERISK.

MISMATCH STEP OF ± .005 PERMISSIBLE DUE TO CHANGE OF CUTTERS AT INSIDE INTERSECTING SURFACES.

DIAMETERS MARKED MUST BE CONCENTRIC WITHIN FULL INDICATOR READING.

HOLES MUST BE KEPT FREE OF CHROME PLATING SOLUTION.

ALL DIMENSIONS SHOWN TO BE MET AFTER CADMIUM PLATING. THICKNESS OF PLATE .0003 MIN TO .0005 MAX. MIN THICKNESS TO BE .0002 ON THREADED AREAS. NO ALLOWANCES FOR PLATING IN HOLES

125√ SURFACE ROUGHNESS INCLUDING REAMED HOLES PER MIL-STD-10

200√ FOR ALL DRILLED HOLES

REMOVE ALL BURRS
BREAK ALL EDGES .015-.031

INSPECTION INFORMATION
MINIMUM PERMISSIBLE AVERAGE EDGE DISTANCE MARKED IS

SYMBOL √ DENOTES SURFACE TO BE MACHINED

UNLESS OTHERWISE SPECIFIED TOLERANCE ON FLANGES IS ± 1/32

LENGTHS OF AN, NAS & MS AL ALY RIVETS SHORTER THAN 1 INCH ARE NOT SPECIFIED

TOLERANCE ON LOFTED DELINEATIONS IS

DWG SIZE 34x 106
PRINTING INFO ONLY
FULL SIZE SHEET AREA (36x 108) = 27.0 SQ. FT.
¼ SIZE SHEET AREA (¼ OF FULL) = 6.750 SQ. FT.
PRINT TRIM LINE

J
H
G

LDW280-52524C

LDW280-52524C

03/03

NAS 9-1100

CODE IDENT NO 26512
LDW280-52524 SH 5

	GRUMMAN AIRCRAFT ENGRG CORP, BETHPAGE, L. I., NEW YORK			
LM	SIZE J	CODE IDENT NO. 26512	LDW280-52524	C
MODEL OR END ITEM	SCALE FULL		SHEET 5	

©

ENG 71-7 6-64

THIS IS AN ORIGINAL DWG 3 FRAMES

ENG 32.1 REV 3-65

GRUMMAN AIRCRAFT ENGINEERING CORP.
CODE IDENT NO. 26512
ENGINEERING ORDER

DWG. NO. LDW280-52524
EO NO. D1
CONTROL INFO NO. LDW280B6868

ON - 5 ~ LDW280M17136-5 REPLACES LDW280M17136-5-1

EFF: LM-3 (33) LFM 282 (N/A & QTY TO REMAIN AS IS)

LFM

DETAIL SPEC REQ		CL II ENGRG CHG		CL I ENGRG CHG	✓ LCD3537 PKG 1

REASON FOR EO	DESCRIPTION OF EO	GAEC EO RELEASE
LCD 3537A CANCELLED PER LAV-10-504	ON -5 ~ LDW280M17136-5 REPLACED LDW280M17136-5-1	Ⓡ

MODEL	EFFECTIVITY		
	PROCURING ACTIVITY NO.	GAEC UNIT NO.	SUB CONTR UNIT NO.
LM	LFM282	LM-3 (33)	

DRAWING CHANGE REQD		DISPOSITION OF PARTS	
✓		✓	
REVISE DWG	RECORD EO	REWORK	SCRAP

APPROVED BY					WJS	RLT		
DATE	1/20/69	K		1/20/69	1/20/69	1-22-69 KSS	1/21/69	1-22-69
	VDI	~~SUPPORT~~	RELIAB. GROUP	GROUP LEADER	STRESS GROUP	~~LIAISON ENGRG~~	PROJ ENGRG	GOVT

PRIORITY	DRAWING TITLE	DRAWING NO.	EO NO.
C	BULKHEAD INSTALLATION DIS R.H. END	LDW280-52524	D1

CDR 12-23-68

ISSUED BY R. CLARK/P. THORJUSEN 8-7222 SECTION VDI GROUP NO. 280 PL 25

01

NAS 9-1100

REVISIONS FOR CONTINUATION OF REVISIONS SEE SHEET ______

CHANGE LTR	ITEM NO.	SHEET NO.	ZONE	GRUMMAN INFO ONLY	DET SPEC	CLASS I	CLASS II	ENGRG ORDER	DESCRIPTION	EFFECTIVITY	DISPOSITION OF EXISTING PARTS REWORK	DISPOSITION OF EXISTING PARTS SCRAP	CHANGED BY AND DATE	ENGRG APPD	GOVT APPD
A	1	1.00, 1.10						EO A1	EO A1 INITIAL DWG RELEASE. PARTS MADE PER E.O.		NOT	REQD	POTTINGER 9 DEC 66		
	2	2.04, 1.10 4.00	5F					EO A2	IN FLD & B/M (ON-1) ADDED HL10V-5-7(1), HL10V-5-5 (1) & HL10V-5 (2) REMOVED MS20470DD5(2).	LM-2(32) LM-3(33)	✓				
	3	2.02, 3.00 4.00 1.10	5A 8A 6F					EO A3	ADDED TO-1 IN FLD & BM, LDW280-18065-13, -19. ADDED NAS 697A08(2), NAS1097-AD3(4) & DRILL #19(3)						
	4	2.00, 3.00	7B				✓	EO A4	IN FLD & B/M ON -3 LDW280-17125-21 WAS LDW280-17125-19						
	5	1.10, 2.03, 4.00	4F					EO A5	LDW280M17604-5 WAS -1						
B	1	1.00, 3.00 1.10	4A 7A				✓	EO B1	ON-1 REMOVED LEM-3 REQM'TS; ADDED -5, -7 AND LDW280-53516-3	LM-3(33)					
	2	4.00 1.10	4F					EO B2	ON-3 & -7 ASSY'S REVISED TRIM TO AGREE WITH CHEM-MILL WEB CONTOUR.	LM-2(32) LM-3(33)					
	3	2.04, 5.00 1.10	8G					EO B3	FOR -3 & -7 ASSY'S IN FLD & B/M, REPLACED HL10V-12-8(4) WITH GB511D-6-9(4), IN FLD ADDED SECT W-W & SHIM AS REQD. .055 MAX WAS .032 MAX.						
	4	2.02, 3.00 4.00, 1.10	5A 8A 6F					EO B4	REFERENCE E.O. A3 ADDED LDW280-18065-23(2), -19 (1). REMOVED FROM -1; DRILL #19, NAS697A08(1) NAS1097-AD3(2) (TYP 3 PLACES)						
	5	1.00, 3.00, 5.00						EO B5	IN -1 & -5 ADDED: VIEW Y-Y & 11/32 x 1/64 C. RAD. CALLOUT TO F/D.	LM-2, -3	✓				
	6	2.02, 3.00 4.00 1.10	5A 8A 6F					EO B6	REF E.O. B4 ADDED LDW280-18065-37 WAS -23, -39 WAS -29 ADDED NOTE 11	LM-2(32) LM-3(33)	✓				
	7	2.02, 3.00 4.00, 1.10	5A 8A 6F					EO B7	REF E.O. B4 ADDED "REMOVE FROM -1 & -5 WAS "REMOVE FROM -1"		NOT	REQD			
	8	1.10, 2.03, 2.04, 3.00, 4.00, 5.00						①	REVISED COMMERCIAL HARDWARE TO GAEC VENDOR EQUIVALENT.	NOT REQD	NOT	REQD			

CHG APPROVED	LTR	~~GROUP LDR~~	VDI-	STRUCT	STRUCT
	A		1/27/67	W/W 01/31/67	
	B				

GRUMMAN AIRCRAFT ENGRG CORP., BETHPAGE, L. I., NEW YORK

SIZE	CODE IDENT NO.		
B	26512	LDW280-52525	B
SCALE NONE		SHEET 1.10	

ENG 77.16 3-66

01 NAS 9-1100

LDW280-52525 C

MODEL OR END ITEM	NEXT ASSY	MODULE OR SER NO.	REQD PER MODULE OR END ITEM
PART NO.		GAEC SCH NO.	

MODEL OR END ITEM	NEXT ASSY	MODULE OR SER NO.	REQD PER MODULE OR END ITEM
LM	LDW280-52510	LM-2(32)	1
PART NO. LDW280-52525-1		GAEC SCH NO.	

MODEL OR END ITEM	NEXT ASSY	MODULE OR SER NO.	REQD PER MODULE OR END ITEM
LM	LDW280-53510	LM-3(33)	1
PART NO. LDW280-52525-5		GAEC SCH NO. 51-3	

(5)

SH REV STATUS: FOR DESCRIPTION OF REV SEE SUBQ SH

SHEET	1.00	1.10	2.00	2.01	2.02	2.03	2.04	3.00	4.00
REV	C	B	C	B	C	C	C	C	C
SHEET	5.00	1.11							
REV	C	C							
SHEET									
REV									

LAST SECT LTR USED Y-Y

LAST DASH NO. USED -7

GRUMMAN REL INFO C

PRIM NO. 207 (K-001) ME-IC-2/13/9

UNLESS OTHERWISE SPECIFIED DIMENSIONS ARE IN INCHES.
TOLERANCE UNLESS SPECIFIED
FRACTIONS - DECIMALS – ANGLES
±1/16 ±.020 ±1/2°

ORIG DWG AUTH
DETAIL SPEC REQUIREMENT
CLASS II ENGRG CHANGE
CLASS I ENGRG CHANGE

CONTRACT NO. NAS 9-1100
LINE ITEM #1
DOCUMENTATION TYPE II

DRAWN BY POTTINGER
LAYOUT BY
CHECKED BY B. 12-19-66
GR LEADER
VEH DES INT
STRUCTURE
STRUCTURE
WEIGHTS
RELIABILITY
PROJ ENGR
REL GROUP

GRUMMAN AIRCRAFT ENGRG CORP
BETHPAGE, L. I., NEW YORK

BULKHEAD INSTL
DESCENT STAGE-LH END

SIZE B
CODE IDENT NO. 26512
LDW280-52525 C (C)
SCALE NONE
SHEET 1.00 OF 11

ENG 77.1 12-65

01

NAS 9-1100

REVISIONS FOR CONTINUATION OF REVISIONS SEE SHEET ______

CHANGE LTR	ITEM NO.	SHEET NO.	ZONE	GRUMMAN INFO ONLY	DET SPEC	CLASS I	CLASS II	ENGRG ORDER	DESCRIPTION	EFFECTIVITY	DISPOSITION OF EXISTING PARTS REWORK	DISPOSITION OF EXISTING PARTS SCRAP	CHANGED BY AND DATE	ENGRG APPD	GOVT APPD
C	1	1.11 2.00 3.00 4.00 & 5.00							INCORPORATED LEO 280-422 ADDED SHEET 1.11	LM-2 & LM-3			F. ALESSIO 1-29-69		
	2	2.00 & 3.00							INCORPORATED EO C2	LM-2					
	3	2.04 & 3.00							INCORPORATED LEO 280-702	LM-2 & LM-3					
	4	2.03 2.04 3.00 & 4.00		E					INCORPORATED EO C4	LM-3					
	5	3.00 & 4.00							INCORPORATED EO C5	LM-3					
	6	2.02 & 3.00		LFM282					INCORPORATED LEO 280-1186	LM-3					
	7	2.02 & 3.00		LFM282				Ⓕ	INCORPORATED LEO 280-1264	LM-3		N.D.	ES		

CHG APPROVED LTR	GROUP LDR	VEH DES INT	STRUCT	STRUCT	WEIGHTS	RELIABILITY					
C											

GRUMMAN AIRCRAFT ENGRG CORP., BETHPAGE, L. I., NEW YORK

SIZE	CODE IDENT NO.		
B	26512	LDW280-52525	C
SCALE NONE		SHEET 1.11	

ENG 77.16 3-66

01

NAS 9-1100

			-7	-5	-3	-1	CODE IDENT	PART NO.	I&T	NOMENCLATURE OR DESCRIPTION	MATERIAL	GOVT SPEC	COML SPEC	STOCK SIZE	PROCESS SYM	FINISH NO.	ZONE
			QTY PER ASSEMBLY														
			2		2			LDW280-17429-13	E	DOUBLER	SEE DWG						3B
				1		1		LDW280-17429-11		ZEE							4C
			2		2			LDW280-17341-13		DOUBLER							3C
			1		1			LDW280-17307-21		TEE							5F
			1		1			-19									9F
			1		1			-15									5F
			1		1			LDW280-17307-11		TEE							9F
			1		1			LDW280-17306-21		SHIM							5F
			1		1			LDW280-17306-11		SHIM							9F
			1		1			LDW280-17154-12		STIFFENER							9D
			1		1			LDW280-17154-11		STIFFENER							6B
				1		1		LDW280-17150-12		CLIP							4D
				1		1		LDW280-17150-11		CLIP							4C
			1		1			LDW280-17125-21		WEB							7E
			1					LDW280-53516-3		TRUSS INSTL							4A
					1			LDW280-23516-9		TRUSS INSTL	SEE DWG						4A
				1				LDW280-52525-7		BULKHEAD ASSY							7A
								-5		INSTL							7A
						1		-3		ASSY							7A
								LDW280-52525-1	E	BULKHEAD INSTL							7A

SYM OR NO.	PROCESS OR FINISH	GRUMMAN SPEC OR MILITARY SPEC	SYM OR NO.	PROCESS OR FINISH	GRUMMAN SPEC OR MILITARY SPEC	SYM OR NO.	PROCESS OR FINISH	GRUMMAN SPEC OR MILITARY SPEC
						88	ANODIZE	LSP14-9030

I & T: IDENTIFICATION AND TRACEABILITY IN ACCORDANCE WITH : NONE

GRUMMAN AIRCRAFT ENGRG CORP, BETHPAGE, L. I., NEW YORK

SIZE	CODE IDENT NO.		
B	26512	LDW280-52525	C
SCALE NONE		SHEET 2.00	

ENG 77.2 7-65

01

NAS 9-1100

			QTY PER ASSEMBLY				CODE IDENT	PART NO.	I&T	NOMENCLATURE OR DESCRIPTION	MATERIAL	GOVT SPEC	COML SPEC	STOCK SIZE	PROCESS SYM	FINISH NO.	ZONE
			-7	-5	-3	-1											
			1		1			LDW280-17696-15	E	ANGLE	SEE DWG						8A
			1		1			-14									5E
			1		1			-13									5A
			2		2			-12									9A
			2		2			LDW280-17696-11									8A
			1		1			LDW280-17695-15									7F
			1		1			-13									5A
			2		2			-12									6F
			3		3			LDW280-17695-11		ANGLE							6A
			1		1			LDW280-17624-16		STIFFENER							3F
			1		1			-15									3A
			1		1			-14									3E
			1		1			-13									3A
			1		1			-12									4E
			1		1			LDW280-17624-11									4A
			1		1			LDW280-17620-13									3E
			1		1			LDW280-17620-11		STIFFENER							3B
			1		1			LDW280-17617-14		PLATE							9F
			1		1			LDW280-17617-13									9F
			1		1			LDW280-17614-18									9A
			1		1			LDW280-17614-17									9A
			4		4			LDW280-17613-15									3A
			4		4			LDW280-17613-13									3A
			4		4			LDW280-17613-11	E	PLATE	SEE DWG						3A

SYM OR NO.	PROCESS OR FINISH	GRUMMAN SPEC OR MILITARY SPEC	SYM OR NO.	PROCESS OR FINISH	GRUMMAN SPEC OR MILITARY SPEC	SYM OR NO.	PROCESS OR FINISH	GRUMMAN SPEC OR MILITARY SPEC

I & T: IDENTIFICATION AND TRACEABILITY IN ACCORDANCE WITH :
NONE

GRUMMAN AIRCRAFT ENGRG CORP, BETHPAGE, L. I., NEW YORK

SIZE	CODE IDENT NO.		
B	26512	LDW280-52525	B
SCALE NONE			SHEET 2.01

ENG 77.2 7-65

01

NAS 9-1100

QTY PER ASSEMBLY			-7	-5	-3	-1	CODE IDENT	PART NO.	I&T	NOMENCLATURE OR DESCRIPTION	MATERIAL	GOVT SPEC	COML SPEC	STOCK SIZE	PROCESS SYM	FINISH NO.	ZONE
			1		1			LDW280M17405-7	E	CAPSTRIP	SEE DWG						3F
			1		1			LDW280M17404-5		CAPSTRIP							3A
			1		1			LDW280M17325-1		FITTING							4A
			1		1			LDW280M17230-8		BEAM							4F
			1		1			LDW280M17230-7		BEAM							4A
				1		1		LDW280M17136-5		FITTING							3C
			1		1			LDW280M17113-3		CAPSTRIP							10B
				1		1		LDW280-18065-39		BRACKET							5A
				2		2		LDW280-18065-37		BRACKET							8F
			1		1			LDW280-17699-20		CLIP							9E
			1		1			-19		CLIP							4B
			2		2			-17		PLATE							4E
			2		2			LDW280-17699-13		PLATE							4B
			1		1			LDW280-17697-13		STIFFENER							3E
			1		1			LDW280-17697-11	E	STIFFENER	SEE DWG						3B

SYM OR NO.	PROCESS OR FINISH	GRUMMAN SPEC OR MILITARY SPEC	SYM OR NO.	PROCESS OR FINISH	GRUMMAN SPEC OR MILITARY SPEC	SYM OR NO.	PROCESS OR FINISH	GRUMMAN SPEC OR MILITARY SPEC

I&T: IDENTIFICATION AND TRACEABILITY IN ACCORDANCE WITH : NONE

GRUMMAN AIRCRAFT ENGRG CORP, BETHPAGE, L. I., NEW YORK

SIZE	CODE IDENT NO.		
B	26512	LDW280-52525	C

SCALE NONE SHEET 2.02

ENG 77.2 7-65

01

NAS 9-1100

QTY PER ASSEMBLY																	
			-7	-5	-3	-1	CODE IDENT	PART NO.	I&T	NOMENCLATURE OR DESCRIPTION	MATERIAL	GOVT SPEC	COML SPEC	STOCK SIZE	PROCESS SYM	FINISH NO.	ZONE
			4		4			GB511K-6-8	E	BOLT	GRUMMAN STD						
			8		8			-4-8									
			8		8			-4-7									
			12		12			-4-5									
			14		14			-4-3									
			12		12			-3-6									
			6		6			-3-5									
				2		2		-08-7									
			8		8			-08-6									
			8	2	8	2		-08-5									
			12		12			GB511K-08-3									
			4		4			GB511D-6-9		BOLT	GRUMMAN STD						
																	10E
				1				LDW280M17740-12		FITTING	SEE DWG						10F
				1				LDW280M17740-11									10B
				1				LDW280M17739-11									10A
				3				LDW280M17738-11									
			1		1			LDW280M17604-5									4F
			1		1			LDW280M17471-2									20J
			1		1			LDW280M17471-1									20J
			2		2			LDW280M17470-3		FITTING							3A
			1		1			LDW280M17418-1	E	CAPSTRIP	SEE DWG						3B

SYM OR NO.	PROCESS OR FINISH	GRUMMAN SPEC OR MILITARY SPEC	SYM OR NO.	PROCESS OR FINISH	GRUMMAN SPEC OR MILITARY SPEC	SYM OR NO.	PROCESS OR FINISH	GRUMMAN SPEC OR MILITARY SPEC

I & T: IDENTIFICATION AND TRACEABILITY IN ACCORDANCE WITH : NONE

GRUMMAN AIRCRAFT ENGRG CORP, BETHPAGE, L. I., NEW YORK

SIZE	CODE IDENT NO.		
B	26512	LDW280-52525	C

SCALE NONE SHEET 2.03

ENG 77.2 7-65

01

NAS 9-1100

QTY PER ASSEMBLY -7	-5	-3	-1	CODE IDENT	PART NO.	I&T	NOMENCLATURE OR DESCRIPTION	MATERIAL	GOVT SPEC	COML SPEC	STOCK SIZE	PROCESS SYM	FINISH NO.	ZONE
—	—	—	—		MS20470DD6	E	RIVET	STD PART						
—	—	—	—		DD5									
—	—	—	—		DD4									
—	—	—	—		MS20470 AD4									
8		8			NAS1097 DD5		RIVET							
	2		2		NAS654V6		BOLT							
	2		2		NAS654 V4		BOLT							
	4		4		AN960D416		WASHER	STD PART						
					SHIM		SEE NOTE#1							
	A/R		A/R		GT535AC-32 C		TAPE	GRUMMAN STD.						
	A/R		A/R		GT535AC-16 B		TAPE							
	A/R		A/R		GT535AC-08B		TAPE							
2		2			G120-170-5-11A		SHIM							
	12				GR500A-5G		RIVET							
	4		4		GR501A-4H		RIVET							
	1		1		GR500A-4E		RIVET							
	4		4		GR500A-4D		RIVET							
4		4			GN512H-6		COLLAR							
32		32			GN512H-4		COLLAR							
18		18			GN512H-3		COLLAR							
28	2	28	2		GN512H-08		NUT, COLLAR							
	4		4		GN511C-428	E	NUT	GRUMMAN STD						

SYM OR NO.	PROCESS OR FINISH	GRUMMAN SPEC OR MILITARY SPEC	SYM OR NO.	PROCESS OR FINISH	GRUMMAN SPEC OR MILITARY SPEC	SYM OR NO.	PROCESS OR FINISH	GRUMMAN SPEC OR MILITARY SPEC

I&T: IDENTIFICATION AND TRACEABILITY IN ACCORDANCE WITH : NONE

GRUMMAN AIRCRAFT ENGRG CORP, BETHPAGE, L. I., NEW YORK

SIZE B
CODE IDENT NO. 26512
LDW280-52525
C

SCALE NONE
SHEET 2.04

ENG 77.2 7-65

01

NAS 9-1100

01/03 NAS 9-1100

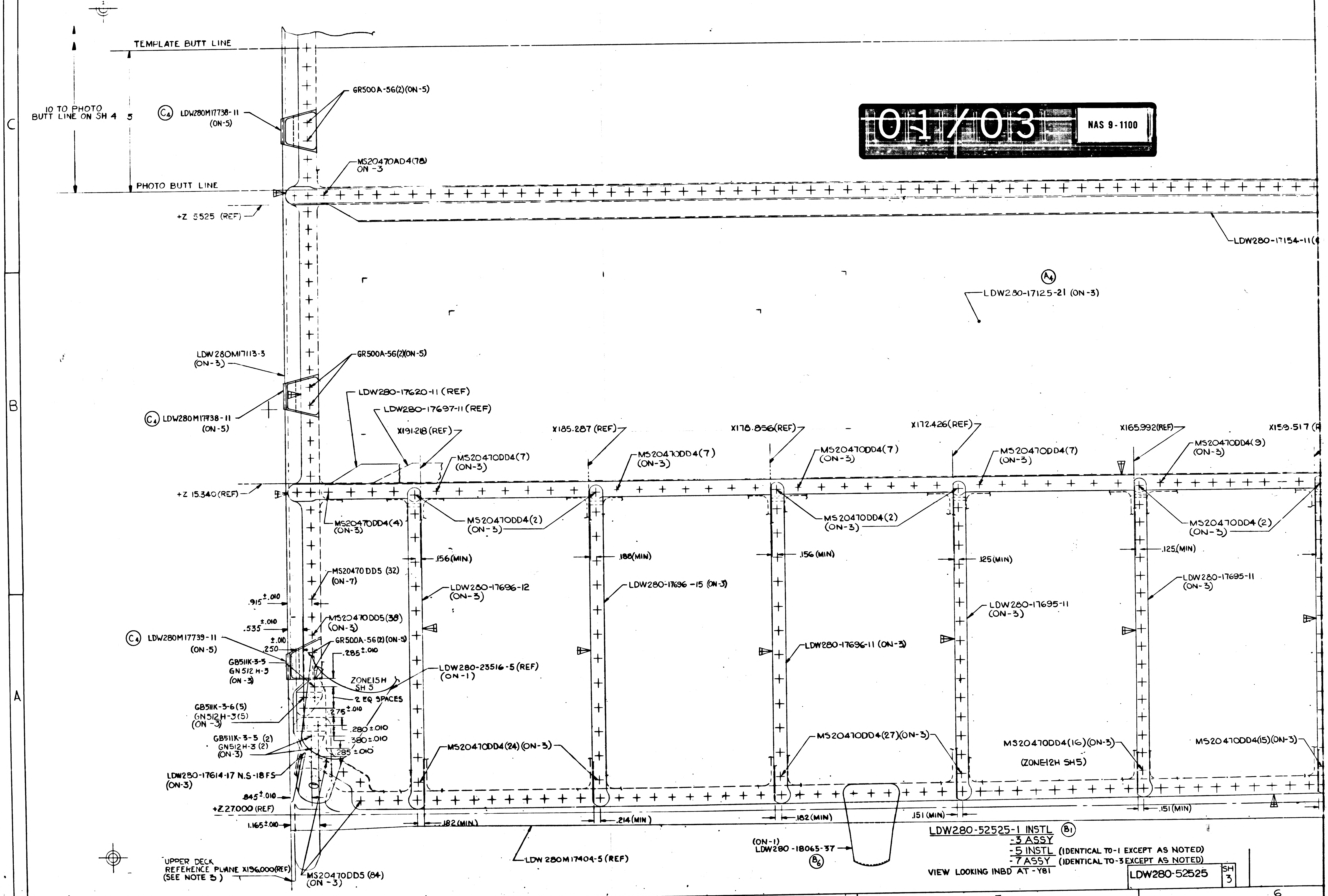

LDW280-52525 SH 3
TEMPLATE BUTT LINE
10 TO PHOTO BUTT LINE ON SH 4 5
PHOTO BUTT LINE
C4 LDW280M17738-11 (ON-5)
GR500A-56(2)(ON-5)
MS20470AD4(78) ON -3
+Z 5525 (REF)
LDW280-17154-11(
A4 LDW280-17125-21 (ON-3)
LDW280M17113-3 (ON-3)
GR500A-56(2)(ON-5)
LDW280-17620-11 (REF)
LDW280-17697-11 (REF)
C4 LDW280M17738-11 (ON-5)
X191.218 (REF)
X185.287 (REF)
X178.856(REF)
X172.426(REF)
X165.992(REF)
X159.517 (R
MS20470DD4(7) (ON-3)
MS20470DD4(7) (ON-3)
MS20470DD4(7) (ON-3)
MS20470DD4(7) (ON-3)
MS20470DD4(9) (ON-3)
+Z 15.340 (REF)
MS20470DD4(4) (ON-3)
MS20470DD4(2) (ON-3)
MS20470DD4(2) (ON-3)
MS20470DD4(2) (ON-3)
.156(MIN)
.188(MIN)
.156 (MIN)
.125(MIN)
.125(MIN)
MS20470 DD5 (32) (ON-7)
LDW280-17696-12 (ON-3)
LDW280-17696 -15 (ON-3)
LDW280-17695-11 (ON-3)
LDW280-17695-11 (ON-3)
.915 ±.010
.535 ±.010
.250 ±.010
MS20470DD5(38) (ON-3)
C4 LDW280M17739-11 (ON-5)
GR500A-56(2)(ON-5)
.285 ±.010
LDW280-17696-11 (ON-3)
GB511K-3-5 GN512H-3 (ON-3)
ZONE15H SH 5
LDW280-23516-5 (REF) (ON-1)
2 EQ SPACES
.275 ±.010
GB511K-3-6(5) GN512H-3(5) (ON-3)
.280 ±.010
.380 ±.010
.285 ±.010
GB511K-3-5 (2) GN512H-3 (2) (ON-3)
MS20470DD4(24)(ON-3)
MS20470DD4(27)(ON-3)
MS20470DD4(16)(ON-3)
(ZONE12H SH5)
MS20470DD4(15)(ON-3)
LDW280-17614-17 N.S-18 FS (ON-3)
.845 ±.010
+Z 27.000 (REF)
1.165 ±.010
.182 (MIN)
.214 (MIN)
.182 (MIN)
.151 (MIN)
.151 (MIN)
(ON-1) LDW280-18065-37
B6
LDW 280M17404-5 (REF)
UPPER DECK REFERENCE PLANE X196.000(REF) (SEE NOTE 3)
MS20470DD5 (84) (ON-3)
10
9
8
7
6
C
B
A

LDW280-52525-1 INSTL (B1)
-3 ASSY
-5 INSTL (IDENTICAL TO-1 EXCEPT AS NOTED)
-7 ASSY (IDENTICAL TO-3 EXCEPT AS NOTED)
VIEW LOOKING INBD AT -Y81

LDW280-52525 SH 3

02/03 NAS 9-1100

6
5
4
3
2
X136.015(REF)
GR500A-4D(4)(ON-1)
(SEE NOTE 9)
GR500A-4E
(ON-1)
(SEE NOTE 9)
GR501A-4H(2)(ON-1)
(CSK LDW280M17136-5)
(SEE NOTE 9)
LDW280M17136-5
(ON-1) (SEE NOTE 3)
A
(ZONE 20G SH5)
MS20470DD5(7)
(ON-3)
MS20470AD4(7)
(ON-1)
LDW280-17154-11 LOCATION IN THIS AREA TO BE
COORDINATED WITH LDW280-23900 INSTL
LDW280-17429-11(ON-1)
(ZONE13H SH 5)
R
LDW280-17341-13 (ON-3)
(ZONE14G SH 5)
P
MS20470DD5(7)(ON-1)
MS20470DD5(2)(ON-1)
LDW280-17150-11 (ON-1)
+Z 5.525 (REF)
P
MS20470DD5(5)(ON-3)
MS20470AD4(15)
(ON-1)
MS20470DD5(12)(ON-3)
LDW280-17154-11(ON-3)
LDW280-23900 (REF)
LDW280-17429-13(ON-3)
R
X133.765 (REF)
LDW280M17418-1 (ON-3)
LDW280-17620-11 N.S. (ON-3)
LDW280-17697-11 F.S. (ON-3)
66
F
F (ZONE 16 J SH 5)
X141.187(REF)
X142.000(REF)
X138.193(REF)
X135.198(REF)
MS20470DD5(12)(ON-3)
+Z15.340 REF)
65.992(REF)
X159.517 (REF)
X153.636(REF)
X147.755(REF)
LDW280-17699-19
(ON-3)
LDW280-17699-13 (ON-3)
K
.214(MIN)
.214(MIN)
MS20470DD4(9)
(ON-3)
MS20470DD4(8)
(ON-3)
MS20470DD4(8)
(ON-3)
MS20470DD4(8)(ON-3)
MS20470DD4(32)
(ON-3)
MS20470DD5(2)
(ON-3)
MS20470DD5(14)
(ON-3)
MS20470DD4(2)
(ON-3)
MS20470DD4(2)
(ON-3)
K
MS20470DD4
(7) ON-3
G120-170-5-11A
(ON-3)
(ZONE13G SH5)
MS20470DD4
(15) ON-3
.125(MIN)
.125(MIN)
.156 (MIN)
.188 (MIN)
LDW280-17696-13.
(ON-3)
LDW280-17624-11
(ON-3)
.188(MIN)
.188(MIN)
LDW280-17695-11
(ON-3)
LDW280-17695-11
(ON-3)
LDW280-17695-13
(ON-3)
LDW280-17624-15
(ON-3)
.214(MIN)
LDW280M17230-7(ON-3)
MS20470DD4
(7) ON-3
.188(MIN)
B1
LDW280-23516-9
(ON-3)
LDW280-53516-3
(ON-7)
(SEE NOTE 3)
C2
MS20470DD4
(5) ON-3
MS20470DD5(10)
(ON-3)
LDW280-17624-13
(ON-3)
LDW280-17613-15(2)(ON-3)
LDW280-17613-13(2)(ON-3)
.375±.010
.375±.010
.437±.010
GB511K-4-5(4)
GN512H-4(4)
(ON-3)
GB511K-08-3(2)
GN512H-08
(ON-3)
.214 MIN
.375±.010
.214 MIN
LDW280-17613-11 (1)NS(1)FS
(ON-3)
LDW280M17404-5(ON-3)
(SEE NOTE 3)
.938±.010
MS20470DD4(15)(ON-3)
MS20470DD4(15)(ON-3)
MS20470DD4(15)(ON-3)
E (ZONE16G SH 5)
X150.750(REF)
GB511K-08-5(4)
GN512H-08(4)(ON-3)
J
MS20470DD5(16) (ON-3)
X137.540(REF)
.562±.010
GB511K-08-3(2)(ON-3)
GN512H-08(2)(ON-3)
LOCATE FROM
LDW280-17470-3
Y
X134.050(REF)
LDW280-17470-3(ON-3)
(SEE NOTE 3)
FWD BEAM PANEL REFERENCE PLANE
+Z 27.000 (REF)(SEE NOTE 3)
.151(MIN)
.151 (MIN)
.182 (MIN)
.214(MIN)
LDW280M17325-1(ON-3)
(SEE NOTE 3)
GB511K-08-6(4)
GN512H-08 (4)
(ON-3)
Y
LDW280M17471-2(REF)
(ZONE 14G SH5)
X136.640(REF)
+Z 27.875 (REF)
B6
LDW280-18065-39
(ON-1)
C1
E
GB511K-4-3(2) GN512H-4(2) ON-3
LOCATE FROM LDW280M17325-1
(ZONE13G SH5)
J
B
GB511K-4-3(2)
GN512H-4(2) ON-3
LOCATE FROM LDW280M17325-1
GB511K08-3(2)ON-3
GN512H-08(2)
SHIM AS REQD
.050 MAX THICKNESS
LOWER DECK
REF PLANE
X131.140(REF) (SEE NOTE 3)
B (ZONE 20H SH 5)
-Y81.000
(REF)
GB511K-4-7(4)
GN512H-4(4)
(ON-3)
LDW280-M17418-
GB511K-4-9(4)
GN512H-4 (4)
(ON-3)
±.010
.531
5
LDW280-1761
.375±.010
LDW280-17613-15(REF)
.375±.010
.375±.01
.437±.010
2.
2.750(REF)
.500±.0
.562±.010
.375±.01
LDW28
LDW28
.375±.010
.500±.010
.625
±.010
LDW28
LDW280-17613-11(REF)
±.010
.812
.500

NOTES:
1. SHIM AS REQ'D USING AL ALY
QQ-A-355 2024-T3, FIN 88
2. NO TOOLING HOLES PERMITTED
3. FOR BASIC JIG DATA SEE LDW2
4. a. TOLERANCE ON LOFTED LOCATIONS OF L
b. TOLERANCE ON LOFTED LOCATIONS OF L
5. FASTENER MANUFACTURED HEAD(
ATTACHMENTS) TO BE ON WEB SID
SPECIFIED
6. TOLERANCE ON LOFTED LOCATION
THRU LDW280-17125-19 IS ± 1/32.
LOCATED FROM DETAIL PARTS
7. PERMISSIBLE OIL CAN DEPTH OF W
STIFFENER IS ±.100
8. INSTALL RIVETS WET AND OVE
WITH EPON 919 PER LSP-14-14
9. INSTALL FASTENERS PER LSP-14-153
& LSP-14-15306.
10. GR500A-5G MAY BE SUBSTITUT
MS20470DD5 RIVETS WHERE R
11. UPON COMPLETION OF BULKHEAD INSTL,

XCEPT AS NOTED)
XCEPT AS NOTED)

LDW280-52525 SH 3

LDW280-52525 SH 3

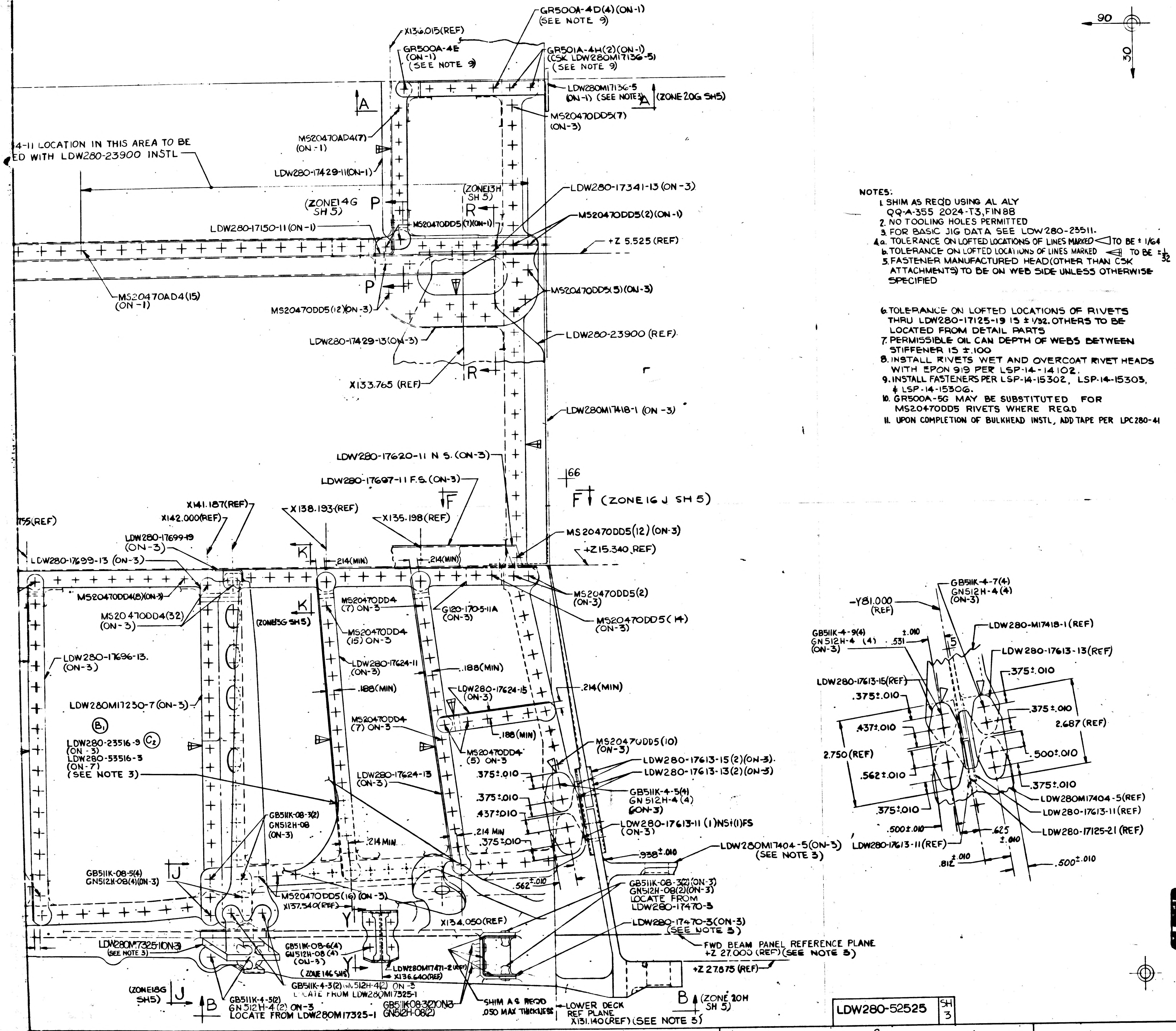
GR500A-4D(4)(ON-1)
(SEE NOTE 9)
X136.015(REF)
GR500A-4E
(ON-1)
(SEE NOTE 9)
GR501A-4H(2)(ON-1)
(CSK LDW280M17136-5)
(SEE NOTE 9)
LDW280M17136-5
(ON-1) (SEE NOTE 5)
A (ZONE 20G SH5)
MS20470DD5(7)
(ON-3)
MS20470AD4(7)
(ON-1)
4-11 LOCATION IN THIS AREA TO BE
ED WITH LDW280-23900 INSTL
LDW280-17429-11(ON-1)
(ZONE 14G
SH 5)
(ZONE 13H
SH 5)
LDW280-17341-13 (ON-3)
MS20470DD5(2)(ON-1)
LDW280-17150-11 (ON-1)
MS20470DD5(7)(ON-1)
+Z 5.525 (REF)
MS20470AD4(15)
(ON-1)
MS20470DD5(12)(ON-3)
MS20470DD5(5)(ON-3)
LDW280-17429-13(ON-3)
LDW280-23900 (REF)
X133.765 (REF)
LDW280M17418-1 (ON-3)
LDW280-17620-11 N S. (ON-3)
LDW280-17697-11 F.S. (ON-3)
66
F (ZONE 16 J SH 5)
X141.187(REF)
X142.000(REF)
X138.193(REF)
X135.198(REF)
755(REF)
MS20470DD5(12) (ON-3)
+Z15.340 REF)
LDW280-17699-19
(ON-3)
LDW280-17699-13 (ON-3)
.214(MIN)
MS20470DD4(8)(ON-3)
MS20470DD4(32)
(ON-3)
(ZONE 15G SH5)
MS20470DD4
(7) ON-3
G120-1705-11A
(ON-3)
MS20470DD5(2)
(ON-3)
MS20470DD5(14)
(ON-3)
MS20470DD4
(15) ON-3
LDW280-17696-13.
(ON-3)
LDW280-17624-11
(ON-3)
.188(MIN)
LDW280-17624-15
(ON-3)
.214(MIN)
LDW280M17230-7(ON-3)
MS20470DD4
(7) ON-3
.188(MIN)
MS20470DD4
(5) ON-3
MS20470DD5(10)
(ON-3)
LDW280-23516-9
(ON-3)
LDW280-53516-3
(ON-7)
(SEE NOTE 3)
LDW280-17613-15(2)(ON-3)
LDW280-17613-13(2)(ON-3)
LDW280-17624-13
(ON-3)
.375±.010
GB511K-4-5(4)
GN512H-4(4)
(ON-3)
GB511K-08-3(2)
GN512H-08
(ON-3)
LDW280-17613-11 (1)NS(1)FS
(ON-3)
.214 MIN
.214 MIN
.437±.010
LDW280M17404-5(ON-3)
(SEE NOTE 3)
.938±.010
GB511K-08-5(4)
GN512H-08(4)(ON-3)
.562±.010
MS20470DD5(16) (ON-3)
X137.540(REF)
GB511K-08-3(2)(ON-3)
GN512H-08(2)(ON-3)
LOCATE FROM
LDW280-17470-3
LDW280-17470-3(ON-3)
(SEE NOTE 3)
X134.050(REF)
LDW280M17325-1(ON-3)
(SEE NOTE 3)
GB511K-08-6(4)
GN512H-08(4)
(ON-3)
LDW280M17471-2(REF)
X136.640(REF)
(ZONE 14G SH5)
GB511K-4-3(2) GN512H-4(2) ON-3
LOCATE FROM LDW280M17325-1
FWD BEAM PANEL REFERENCE PLANE
+Z 27.000 (REF)(SEE NOTE 3)
+Z 27.875 (REF)
(ZONE 18G
SH5)
GB511K-4-5(2)
GN512H-4(2) ON-3
LOCATE FROM LDW280M17325-1
GB511K-08-3(2)ON-3
GN512H-08(2)
SHIM A S REQD
.050 MAX THICKNESS
LOWER DECK
REF PLANE
X131.140(REF)(SEE NOTE 3)
B (ZONE 20H
SH 5)
90
30
-Y81.000
(REF)
GB511K-4-7(4)
GN512H-4(4)
(ON-3)
GB511K-4-9(4)
GN512H-4 (4)
(ON-3)
±.010
.531
LDW280-M17418-1(REF)
LDW280-17613-13(REF)
LDW280-17613-15(REF)
.375±.010
.375±.010
.375±.010
.437±.010
2.687 (REF)
2.750(REF)
.500±.010
.562±.010
.375±.010
LDW280M17404-5(REF)
LDW280-17613-11(REF)
.375±.010
.500±.010
.625
±.010
LDW280-17125-21 (REF)
LDW280-17613-11(REF)
.812±.010
.500±.010
A
P
R
K
J
Y
B

NOTES:

1. SHIM AS REQ'D USING AL ALY QQ-A-355 2024-T3, FIN 88
2. NO TOOLING HOLES PERMITTED
3. FOR BASIC JIG DATA SEE LDW280-23511.
4. a. TOLERANCE ON LOFTED LOCATIONS OF LINES MARKED ◁ TO BE ± 1/64
   b. TOLERANCE ON LOFTED LOCATIONS OF LINES MARKED ◁ TO BE ± 1/32
5. FASTENER MANUFACTURED HEAD (OTHER THAN CSK ATTACHMENTS) TO BE ON WEB SIDE UNLESS OTHERWISE SPECIFIED
6. TOLERANCE ON LOFTED LOCATIONS OF RIVETS THRU LDW280-17125-19 IS ± 1/32. OTHERS TO BE LOCATED FROM DETAIL PARTS
7. PERMISSIBLE OIL CAN DEPTH OF WEBS BETWEEN STIFFENER IS ±.100
8. INSTALL RIVETS WET AND OVERCOAT RIVET HEADS WITH EPON 919 PER LSP-14-14102.
9. INSTALL FASTENERS PER LSP-14-15302, LSP-14-15303, & LSP-14-15306.
10. GR500A-5G MAY BE SUBSTITUTED FOR MS20470DD5 RIVETS WHERE REQD
11. UPON COMPLETION OF BULKHEAD INSTL, ADD TAPE PER LPC280-41

MANUFACTURING OPERATIONS UNLESS OTHERWISE SPECIFIED NOTES CHECKED ✓ APPLY TO THIS DWG.	
PART NUMBER AND ALL OTHER MARKINGS IN REGION MARKED ⊠ USE BOTH SIDES IF NECESSARY.	
FILLET AND INSIDE CORNER RADII TOLERANCES .016R TO .062R ± .010 .063R TO .250R ± .015 OVER .250R ± .030	
DEPTH SHOWN FOR TAPPED HOLES IS FULL THDS. 2-3 IMP. THDS. BEYOND PERMISSIBLE	
EXTERNAL THREAD LENGTH SHOWN INCLUDES 2 IMPERFECT THREADS MAX.	
DO NOT CADMIUM PLATE & PAINT HOLES OR SURFACES MARKED WITH DOUBLE ASTERISK.	
MISMATCH STEP OF ± .005 PERMISSIBLE DUE TO CHANGE OF CUTTERS AT INSIDE INTERSECTING SURFACES.	
DIAMETERS MARKED MUST BE CONCENTRIC WITHIN FULL INDICATOR READING.	
HOLES MUST BE KEPT FREE OF CHROME PLATING SOLUTION.	
ALL DIMENSIONS SHOWN TO BE NET AFTER CADMIUM PLATING. THICKNESS OF PLATE .0003 MIN TO .0005 MAX. MIN THICKNESS TO BE .0002 ON THREADED AREAS. NO ALLOWANCES FOR PLATING IN HOLES	
125 √ SURFACE ROUGHNESS INCLUDING REAMED HOLES PER MIL-STD-10	
200 √ FOR ALL DRILLED HOLES	
REMOVE ALL BURRS. BREAK ALL EDGES .015-.031	
INSPECTION INFORMATION MINIMUM PERMISSIBLE [redacted] EDGE DISTANCE [redacted] IS 1 1/2 FASTENER DIA FROM FASTENER ℄	✓
SYMBOL √ DENOTES SURFACE TO BE MACHINED	
UNLESS OTHERWISE SPECIFIED TOLERANCE ON FLANGES IS ± 1/32	
LENGTHS OF AN, NAS & MS AL ALY RIVETS SHORTER THAN 1 INCH ARE NOT SPECIFIED	
TOLERANCE ON LOFTED DELINEATIONS IS ± 1/16	✓

DWG SIZE 3/4 .106

FULL SIZE SHEET AREA 108
1/4 SIZE SHEET AREA (1/4 OF FULL)

27 SQ. FT.
6.8 SQ. FT.

PRINT TRIM LINE

LDW280-52525 C

03/03

NAS 9-1100

LDW280-52525 SH 3

	GRUMMAN AIRCRAFT ENGRG CORP. BETHPAGE, L. I., NEW YORK			
LM	SIZE J	CODE IDENT NO. 26512	LDW280-52525	C
MODEL OR END ITEM	SCALE FULL		SHEET 3.00	

FOR PHOTO REPRODUCTION

THIS IS AN ORIGINAL DWG "3 FRAMES"

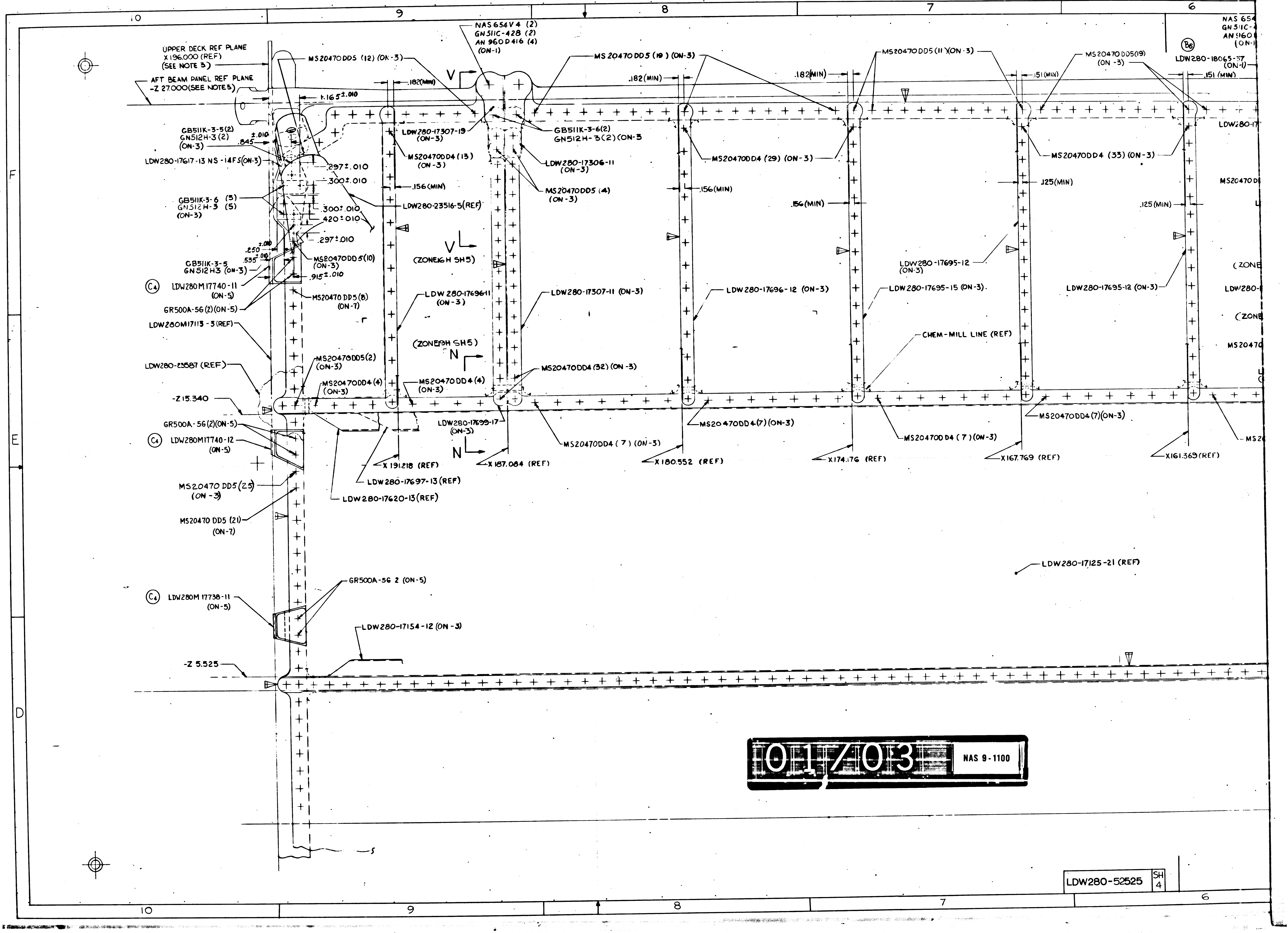
UPPER DECK REF PLANE
X 196.000 (REF)
(SEE NOTE 3)
AFT BEAM PANEL REF PLANE
-Z 27.000 (SEE NOTE 3)
MS20470DD5 (12) (ON-3)
NAS654V4 (2)
GN511C-428 (2)
AN960D416 (4)
(ON-1)
V
.182 (MIN)
1.165 ± .010
MS20470DD5 (19) (ON-3)
.182 (MIN)
.182 (MIN)
MS20470DD5 (11) (ON-3)
MS20470DD5 (19)
(ON-3)
.151 (MIN)
.151 (MIN)
LDW280-18065-37
(ON-1)
GB511K-3-5 (2)
GN512H-3 (2)
(ON-3)
.845
± .010
LDW280-17617-13 NS-14FS (ON-3)
LDW280-17307-19
(ON-3)
GB511K-3-6 (2)
GN512H-3 (2) (ON-3)
MS20470DD4 (13)
(ON-3)
LDW280-17306-11
(ON-3)
MS20470DD4 (29) (ON-3)
MS20470DD4 (33) (ON-3)
.297 ± .010
.300 ± .010
.156 (MIN)
MS20470DD5 (4)
(ON-3)
.156 (MIN)
.125 (MIN)
.125 (MIN)
.156 (MIN)
GB511K-3-6 (5)
GN512H-3 (5)
(ON-3)
LDW280-23516-5 (REF)
.300 ± .010
.420 ± .010
.297 ± .010
.250 ± .010
.535 ± .010
V
(ZONE 6H SH5)
MS20470DD5 (10)
(ON-3)
GB511K-3-5
GN512H3 (ON-3)
.915 ± .010
LDW280-17695-12
(ON-3)
C4
LDW280M17740-11
(ON-5)
LDW280-17696-11
(ON-3)
LDW280-17307-11 (ON-3)
LDW280-17696-12 (ON-3)
LDW280-17695-15 (ON-3)
LDW280-17695-12 (ON-3)
GR500A-56 (2) (ON-5)
MS20470DD5 (8)
(ON-7)
LDW280M17113-3 (REF)
CHEM-MILL LINE (REF)
(ZONE 6H SH5)
N
LDW280-23587 (REF)
MS20470DD5 (2)
(ON-3)
MS20470DD4 (32) (ON-3)
MS20470DD4 (4)
(ON-3)
MS20470DD4 (4)
(ON-3)
-Z 15.340
LDW280-17699-17
(ON-3)
MS20470DD4 (7) (ON-3)
MS20470DD4 (7) (ON-3)
MS20470DD4 (7) (ON-3)
MS20470DD4 (7) (ON-3)
GR500A-56 (2) (ON-5)
C4
LDW280M17740-12
(ON-5)
N
X 191.218 (REF)
X 187.084 (REF)
X 180.552 (REF)
X 174.176 (REF)
X 167.769 (REF)
X 161.369 (REF)
LDW280-17697-13 (REF)
LDW280-17620-13 (REF)
MS20470DD5 (25)
(ON-3)
MS20470DD5 (21)
(ON-7)
LDW280-17125-21 (REF)
GR500A-56 2 (ON-5)
C4
LDW280M17738-11
(ON-5)
LDW280-17154-12 (ON-3)
-Z 5.525
10
9
8
7
6
F
E
D

01/03 NAS 9-1100

LDW280-52525 SH 4

NAS 654 V6 (2)
GN 511C-428 (2)
AN 960 D416 (4)
(ON-1)
LDW 280-23579 (REF)
MS20470 DD5(19) (ON -3)
B6
LDW280-18065-37 (ON-1)
T
.151 (MIN)
D
C1
(ZONE 18G) (SH 5)
H
C
GB511K-4-5(2)
GN 512H-4 (2) (ON-3)
LOCATE FROM LDW280M17604-5
B2
LDW280M17604-5 (ON-3) (SEE NOTE 3)
A5 SHIM AS REQD .050 MAX THICKNESS
GB511K-4-3(2)
GN512H-4(2) (ON-3) LOCATE
FROM LDW280M17604-5
X 136.640 (REF)
GB511K-08-3(2)
GN512H-08(2) (ON-3)
LDW280M17405-7 (ON-3) (SEE NOTE 3)
C (ZONE H20 SH 5)
-Z 27.000 (REF)
-Z 27.875 (REF)
MS20470DD5(15) (ON-3)
.214 (MIN)
LDW280M17471-1 (REF)
GB511K-08-6(4)
GN512H-08 (4) (ON-3)
MS20470DD5 (16) (ON-3)
X 137.540 (REF)
134.050 (REF)
GB511K-08-3(2) GN512H-08(2) LOCATE
FROM LDW280M17470-3 (ON-3)
(SEE NOTE 3)
.938 ± .010
LDW280M17470-3 (ON-3) (SEE NOTE 3)
LDW280-17307-21 (ON-3)
D (ZONE 16G SH 5)
X150.750 (REF)
GB511K-08-5
GN512H-08 (ON-1)
A2
GB511K-08-7
GN512H-08 (ON-1)
MS20470DD5 (ON-3)
MS20470DD4 (16) (ON-3)
GB511K-08-5(4)
GN512H-08(4) (ON-3)
H
.214 MIN
GB511K-08-3(2)
GN512H-08(2) (ON-3)
.562 ± .010
-Y 81.000
.625 ± .010
LDW280-17613-15(2) (ON-3)
LDW280-17613-13(2) (ON-3)
LDW280-17613-11 (1) N.S. (1) F.S.
DD4 (33) (ON-3)
MS20470DD5 (6) (ON-3)
.125 (MIN)
LDW280-17306-21 (ON-3)
.188 (MIN)
MS20470DD4 (7) (ON-3)
.375 ± .010
.214 MIN
.437 ± .010
.375 ± .010
MS20470DD4 (15) (ON-3)
LDW280-17624-12 (ON-3)
.375 ± .010
LDW280-17624-16 (ON-3)
.188 (MIN)
GB511K-4-5(4)
GN512H-4(4) (ON-3)
.214 (MIN)
T
(ZONE 17J SH 5)
LDW280-23579 (REF)
80-17695-12 (ON-3)
LDW280-17307-15 (ON-3)
LDW280-17696-14 (ON-3)
LDW280M17230-8 (ON-3)
MS20470DD4 (7) (ON-3)
LDW280-17624-14 (ON-3)
MS20470DD4 (5) (ON-3)
(ZONE 19H SH 5)
M
MS20470DD4(34) (ON-3)
MS20470DD4 (14) (ON-1)
MS20470DD4 (30) (ON-3)
(ZONE 13G SH 5)
L
.188 (MIN)
.188 (MIN)
MS20470DD5 (10) (ON-3)
-Z 15.340 (REF)
LDW280-17699-17 (ON-3)
LDW280-17699-13 (ON-3)
G120-170-5-11A (ON-3)
(7) (ON-3)
M
LDW280-17699-20 (ON-3)
.214 (MIN)
.214 (MIN)
MS20470DD5 (16) (ON-3)
G
G (ZONE 16 H SH 5)
66
MS20470DD4 (8) (ON-3)
MS20470DD4 (6) (ON-3)
MS20470DD4 (6) (ON-3)
L
X161.369 (REF)
X 154.455 (REF)
X152.645 (REF)
X147.544 (REF)
X142.000 (REF)
X141.187 (REF)
X138.193 (REF)
X135.198 (REF)
LDW280-17697-13 (ON-3) FS
LDW280-17620-13 (ON-3) NS
X131.140 (REF)
5-21 (REF)
LDW280M17418-1 (REF)
MS20470DD5 (12) (ON-3)
MS20470DD5 (12) (ON-3)
LDW280-17429-13 (ON-3)
MS20470DD5 (5) (ON-3)
U
S
ZONE 13H SH 5
MS20470AD4 (78) (ON-3)
MS20470AD4 (15) (ON-1)
-Z 5.525 (REF)
PHOTO BUTT LINE
MS20470DD5 (2) (ON-1)
LDW280-17150-12 (ON-1)
S
MS20470DD5 (7) (ON-3)
MS20470AD4 (8) (ON-1)
U
(ZONE 14G SH 5)
LDW280-17341-13 (ON-3)
10 TO PHOTO BUTT LINE ON SHEET 3
MS20470DD5 (7) (ON-3)
5
LDW280-17154-12 LOCATION IN THIS AREA TO BE COORDINATED WITH LDW280-23900 INSTALLATION
LDW280M17136-5 (REF)
-Z 0.193 (REF)
TEMPLATE BUTT LINE
LDW280-17429-11 (REF)
X136.015 (REF)
GR501A-4H (2) (ON-1)
(SEE NOTE 9)
CSK LDW280M17136-5
LOWER DECK REF PLANE X131.140 (REF)
(SEE NOTE 5)
.500 ± .010
LDW280M17405
.375 ± .010
5
LDW280-17
LDW280-1
.375 ± .01
.562 ± .010
2.750 (REF)
.300 ± .010
.437 ± .010
.375 ± .010
.375 ± .010
GB511K-4-8(4)
GN512H-4 (4) (ON-3)
.375 ± .010
LDW280-17613-15 (REF)
LDW280-17613
.531 ± .010
GB511K-4-7(4)
GN512H-4 (4) (ON-3)
LDW280M174
LDW280-17125-21
.812 ± .010
.500 ± .010
6
5
4
3
2
D-52525 SH 4
LDW280-52525 SH 4

02/03

NAS 9-1100

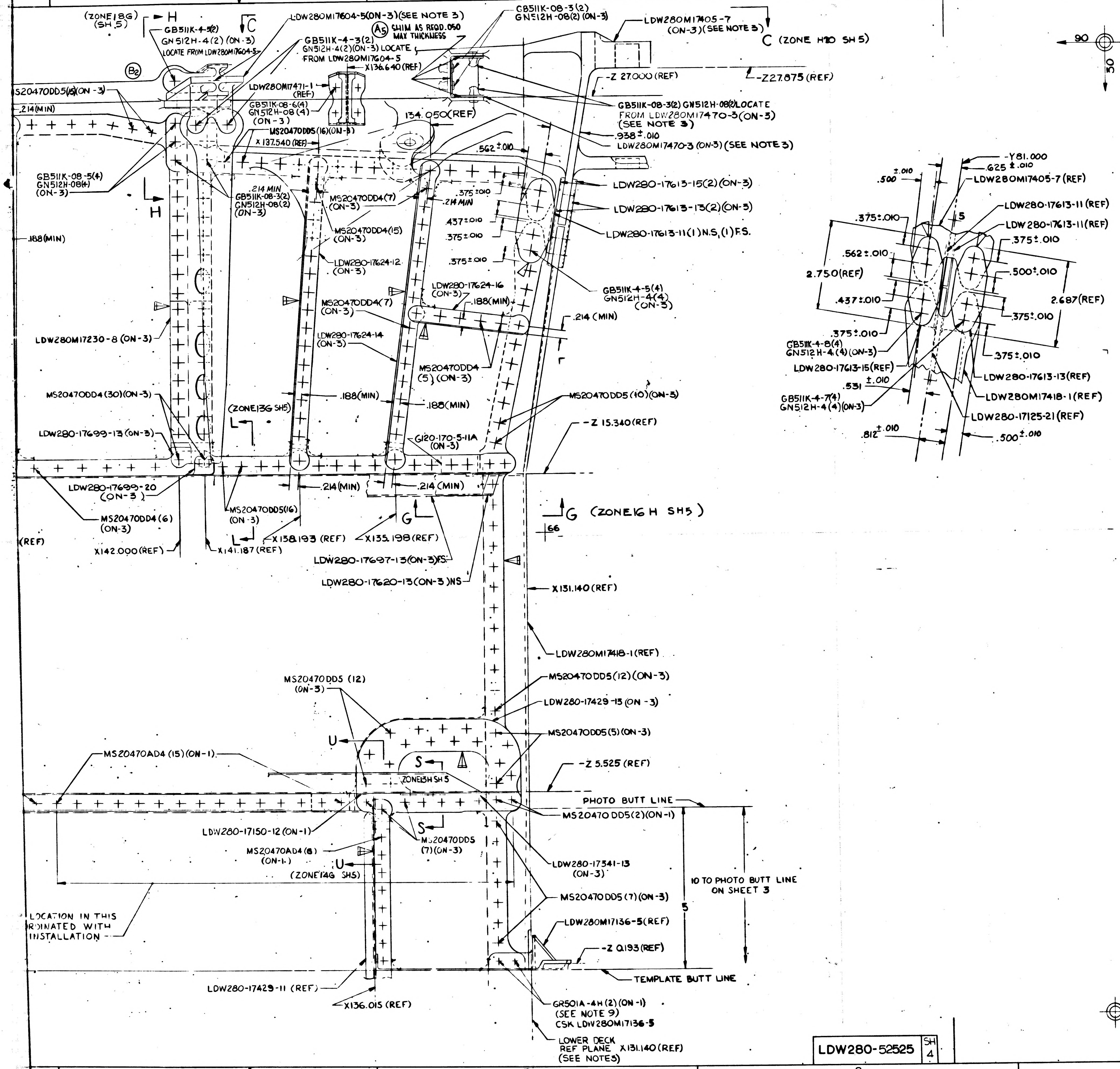
4
3
2
1
(ZONE18G) (SH.5)
H
GB511K-4-5(2) GN512H-4(2) (ON-3) LOCATE FROM LDW280M17604-5
C
LDW280M17604-5(ON-3)(SEE NOTE 3)
A5 SHIM AS REQD .050 MAX THICKNESS
GB511K-4-3(2) GN512H-4(2)(ON-3) LOCATE FROM LDW280M17604-5
X136.640 (REF)
GB511K-08-3(2) GN512H-08(2) (ON-3)
LDW280M17405-7 (ON-3)(SEE NOTE 3)
C (ZONE H20 SH 5)
B2
S20470DD5(15)(ON-3)
.214(MIN)
LDW280M17471-1 (REF)
GB511K-08-6(4) GN512H-08 (4) (ON-3)
-Z 27.000 (REF)
-Z27.875 (REF)
GB511K-08-3(2) GN512H-08(2) LOCATE FROM LDW280M17470-3(ON-3) (SEE NOTE 3)
134.050(REF)
.938±.010
LDW280M17470-3 (ON-3) (SEE NOTE 3)
MS20470DD5(16)(ON-3)
X 137.540 (REF)
.562±.010
GB511K-08-5(4) GN512H-08(4) (ON-3)
H
.214 MIN
GB511K-08-3(2) GN512H-08(2) (ON-3)
MS20470DD4(7) (ON-3)
.375±.010
.214 MIN
LDW280-17613-15(2)(ON-3)
LDW280-17613-13(2)(ON-3)
.437±.010
.375±.010
LDW280-17613-11(1) N.S, (1) F.S.
MS20470DD4(15) (ON-3)
.188(MIN)
.375±.010
LDW280-17624-12 (ON-3)
LDW280-17624-16 (ON-3)
GB511K-4-5(4) GN512H-4(4) (ON-3)
MS20470DD4(7) (ON-3)
.188(MIN)
.214 (MIN)
LDW280M17230-8 (ON-3)
LDW280-17624-14 (ON-3)
MS20470DD4 (5) (ON-3)
MS20470DD4(30)(ON-3)
.188(MIN)
.188(MIN)
MS20470DD5(10)(ON-3)
(ZONE13G SH5)
L
-Z 15.340 (REF)
LDW280-17699-13 (ON-3)
G120-170-5-11A (ON-3)
LDW280-17699-20 (ON-3)
.214(MIN)
.214 (MIN)
MS20470DD4(6) (ON-3)
MS20470DD5(16) (ON-3)
G
G (ZONE16 H SH5)
66
(REF)
X142.000 (REF)
X141.187 (REF)
X138.193 (REF)
X135.198 (REF)
LDW280-17697-13(ON-3)F.S.
LDW280-17620-13(ON-3)NS
X131.140 (REF)
LDW280M17418-1(REF)
MS20470DD5 (12) (ON-3)
MS20470DD5(12)(ON-3)
LDW280-17429-13 (ON-3)
MS20470DD5(5)(ON-3)
U
S
ZONE13H SH5
-Z 5.525 (REF)
MS20470AD4 (15) (ON-1)
PHOTO BUTT LINE
MS20470 DD5(2)(ON-1)
LDW280-17150-12 (ON-1)
S
MS20470DD5 (7)(ON-3)
MS20470AD4 (8) (ON-1)
U
(ZONE14G SH5)
LDW280-17341-13 (ON-3)
10 TO PHOTO BUTT LINE ON SHEET 3
MS20470DD5(7)(ON-3)
LOCATION IN THIS
RDINATED WITH
INSTALLATION
5
LDW280M17136-5(REF)
-Z 0.193(REF)
TEMPLATE BUTT LINE
LDW280-17429-11 (REF)
X136.015 (REF)
GR501A-4H (2) (ON-1) (SEE NOTE 9) CSK LDW280M17136-5
LOWER DECK REF PLANE X131.140(REF) (SEE NOTES)
90
30
-Y81.000
.500 ±.010
.625±.010
LDW280M17405-7(REF)
5
LDW280-17613-11(REF)
LDW280-17613-11(REF)
.375±.010
.375±.010
.562±.010
.500±.010
2.750(REF)
2.687(REF)
.437±.010
.375±.010
.375±.010
.375±.010
GB511K-4-8(4) GN512H-4(4)(ON-3)
LDW280-17613-15(REF)
LDW280-17613-13(REF)
.531 ±.010
LDW280M17418-1(REF)
GB511K-4-7(4) GN512H-4(4)(ON-3)
LDW280-17125-21(REF)
.812±.010
.500±.010

MANUFACTURING OPERATIONS
UNLESS OTHERWISE SPECIFIED
NOTES CHECKED ✓ APPLY TO THIS DWG.

- PART NUMBER AND ALL OTHER MARKINGS IN REGION MARKED ☒ USE BOTH SIDES IF NECESSARY.
- FILLET AND INSIDE CORNER RADII TOLERANCES
  - .016R TO .062R ± .000
  - .063R TO .250R ± .015
  - OVER .250R ± .030
- DEPTH SHOWN FOR TAPPED HOLES IS FULL THDS. 2-3 IMP. THDS. BEYOND PERMISSIBLE
- EXTERNAL THREAD LENGTH SHOWN INCLUDES 2 IMPERFECT THREADS MAX.
- DO NOT CADMIUM PLATE & PAINT HOLES OR SURFACES MARKED WITH DOUBLE ASTERISK.
- MISMATCH STEP OF ± .005 PERMISSIBLE DUE TO CHANGE OF CUTTERS AT INSIDE INTERSECTING SURFACES.
- DIAMETERS MARKED MUST BE CONCENTRIC WITHIN FULL INDICATOR READING.
- HOLES MUST BE KEPT FREE OF CHROME PLATING SOLUTION.
- ALL DIMENSIONS SHOWN TO BE MET AFTER CADMIUM PLATING. THICKNESS OF PLATE .0003 MIN TO .0005 MAX MIN THICKNESS TO BE .0002 ON THREADED AREAS. NO ALLOWANCES FOR PLATING IN HOLES
- 125 √ SURFACE ROUGHNESS INCLUDING REAMED HOLES PER MIL-STD-10
- 200 √ FOR ALL DRILLED HOLES
- REMOVE ALL BURRS. BREAK ALL EDGES .015-.031
- INSPECTION INFORMATION MINIMUM PERMISSIBLE AVERAGE EDGE DISTANCE MARKED IS
- SYMBOL √ DENOTES SURFACE TO BE MACHINED
- UNLESS OTHERWISE SPECIFIED TOLERANCE ON FLANGES IS ± 1/32
- LENGTHS OF AN, NAS & MS AL ALY RIVETS SHORTER THAN 1 INCH ARE NOT SPECIFIED
- TOLERANCE ON LOFTED DELINEATIONS IS

DWG SIZE 34x 104
PRINTING INC
FULL SIZE SHEET AR 108) =
PRINT TRIM LINE

F
E
D

LDW280-52525 C

LDW280-52525 C

03/03 NAS 9-1100

LDW280-52525 SH 4

	GRUMMAN AIRCRAFT ENGRG CORP. BETHPAGE, L. I., NEW YORK			
LM	SIZE J	CODE IDENT NO. 26512	LDW280-52525	C
MODEL OR END ITEM	SCALE FULL		SHEET 4.00	

FOR PHOTO REPRODUCTION

ENG 73-7 6-66

THIS IS AN ORIGINAL DWG 3FRAMES ✓

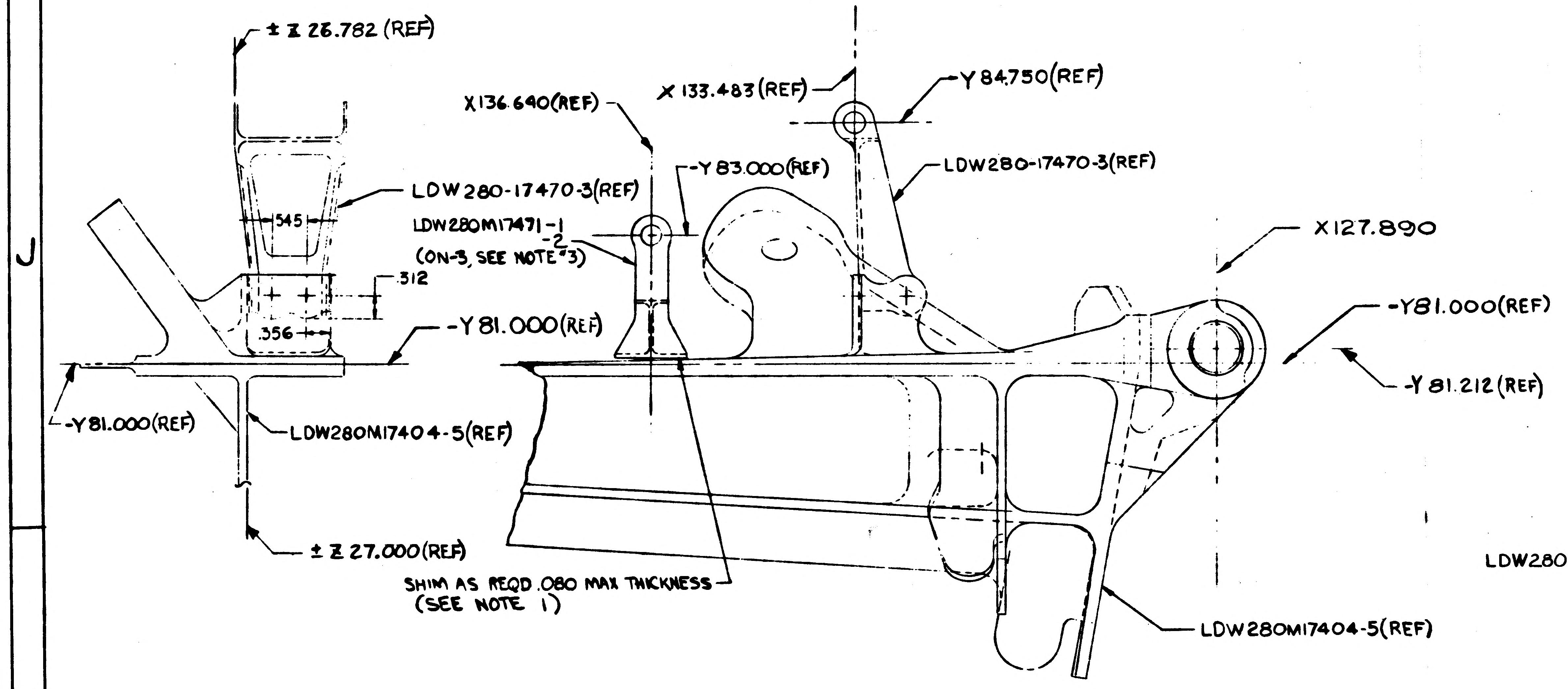
± Z 26.782 (REF)
X136.640(REF)
X 133.483(REF)
Y 84.750(REF)
Y 83.000(REF)
LDW280-17470-3(REF)
LDW280-17470-3(REF)
LDW280M17471-1
-2
(ON-3, SEE NOTE 3)
.545
.312
.356
-Y 81.000(REF)
X127.890
-Y81.000(REF)
-Y 81.212(REF)
-Y81.000(REF)
LDW280M17404-5(REF)
± Z 27.000(REF)
SHIM AS REQD .080 MAX THICKNESS
(SEE NOTE 1)
LDW280M17404-5(REF)
J

VIEW B-B (SHOWN)
(ZONE 3A SH 3)
VIEW C-C (OPP)
(ZONE 3F SH 4)

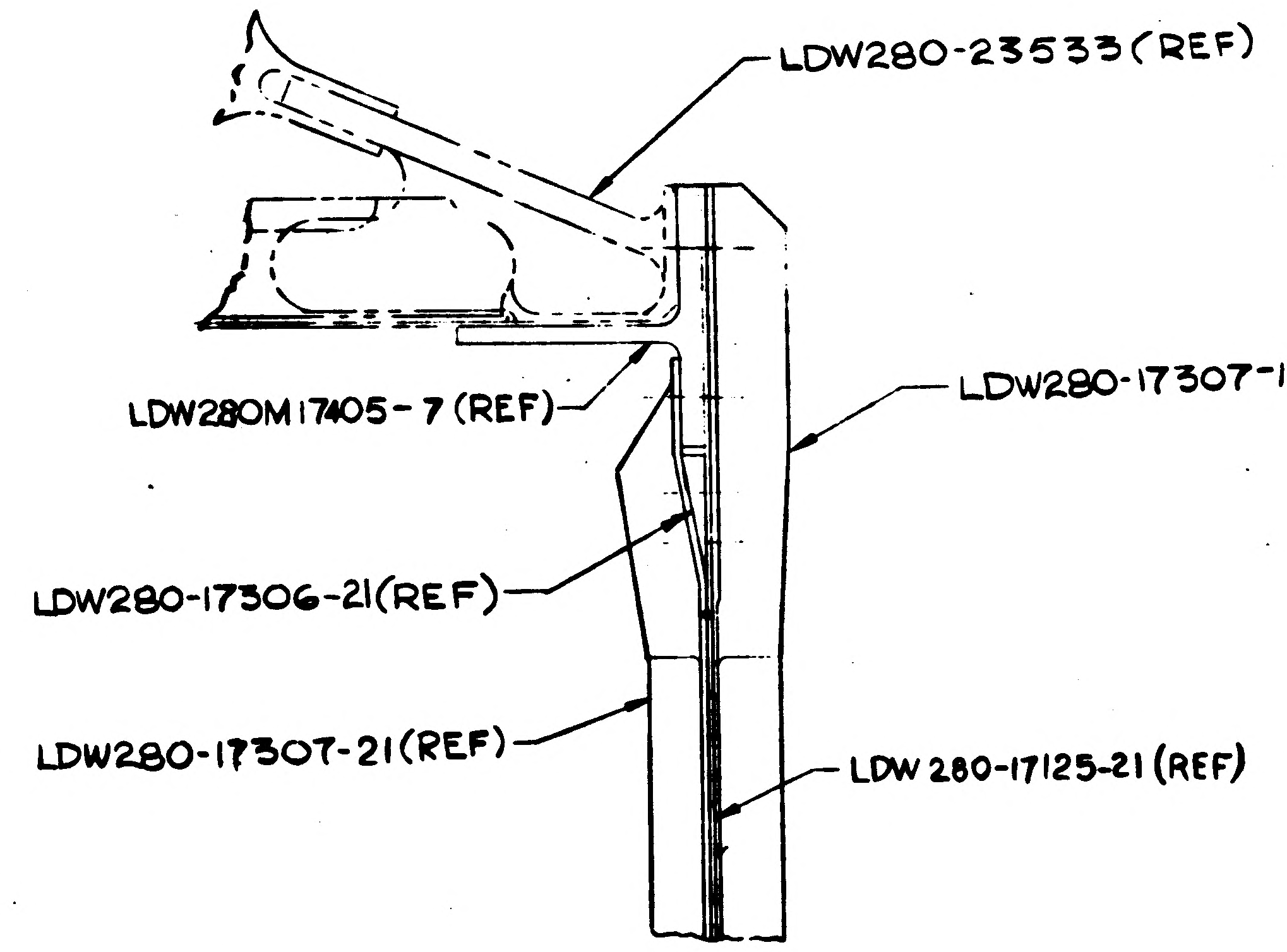
LDW280-23533(REF)
LDW280M17405-7(REF)
LDW280-17307-15(REF)
LDW280-17306-21(REF)
LDW280-17307-21(REF)
LDW 280-17125-21(REF)

SECTION T-T
(ZONE 6F SH 4)

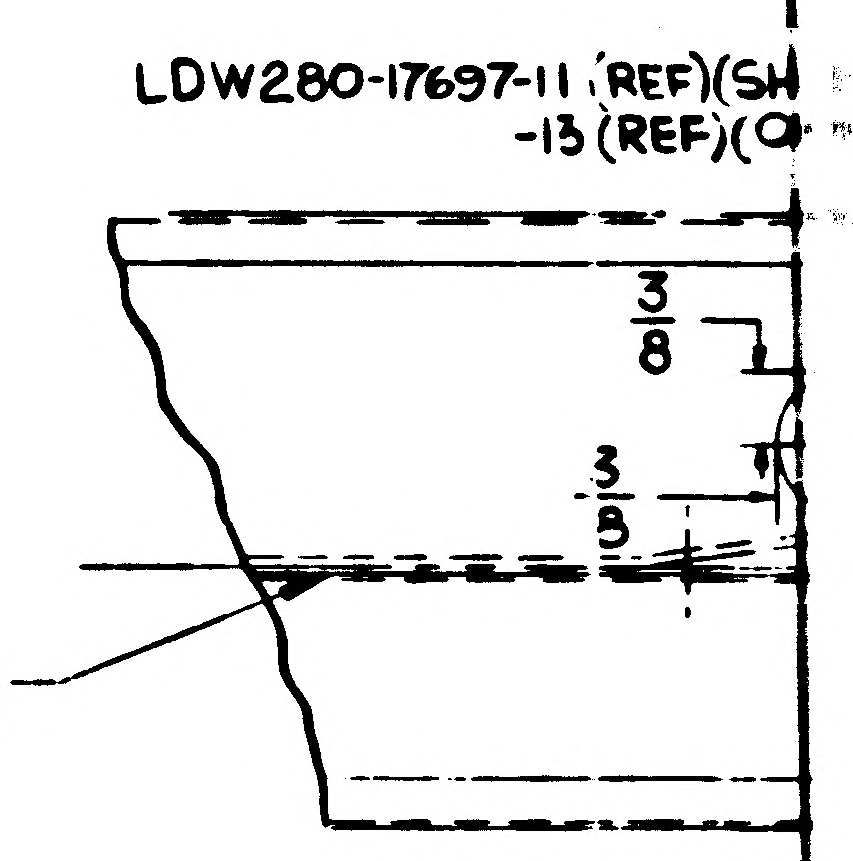
LDW280-17697-11 (REF)(SH
-13 (REF)(O
3/8
3/8
LDW280-17125-21(REF)

SECTION F-F (SHOWN)
(ZONE 3B SH 3)
SECTION G-G (OPP)
(ZONE 3E SH 4)

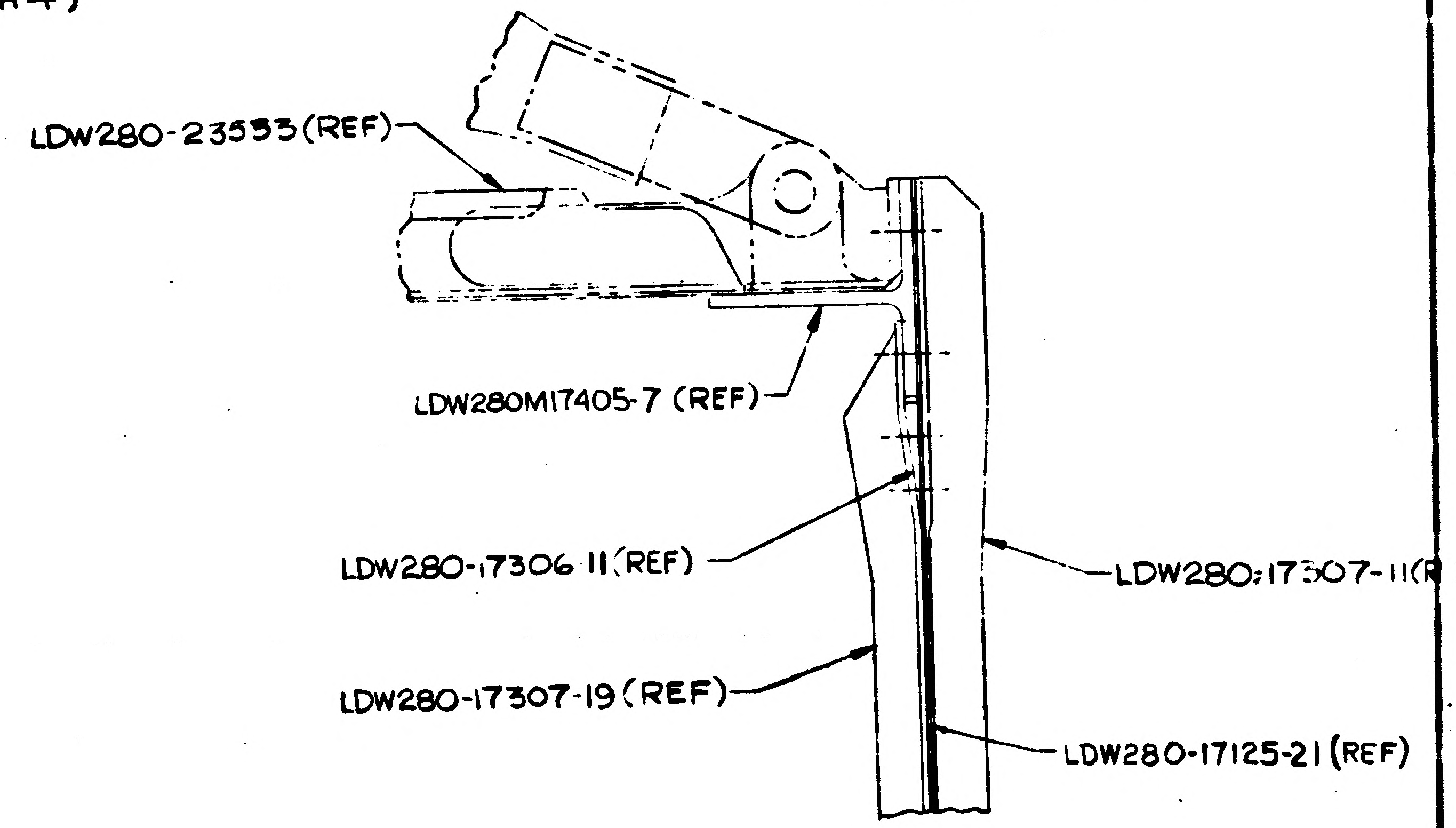
LDW280-23533(REF)
LDW280M17405-7 (REF)
LDW280-17306-11(REF)
LDW280-17307-11(R
LDW280-17307-19(REF)
LDW280-17125-21(REF)

SECTION V-V
(ZONE 9F SH 4)

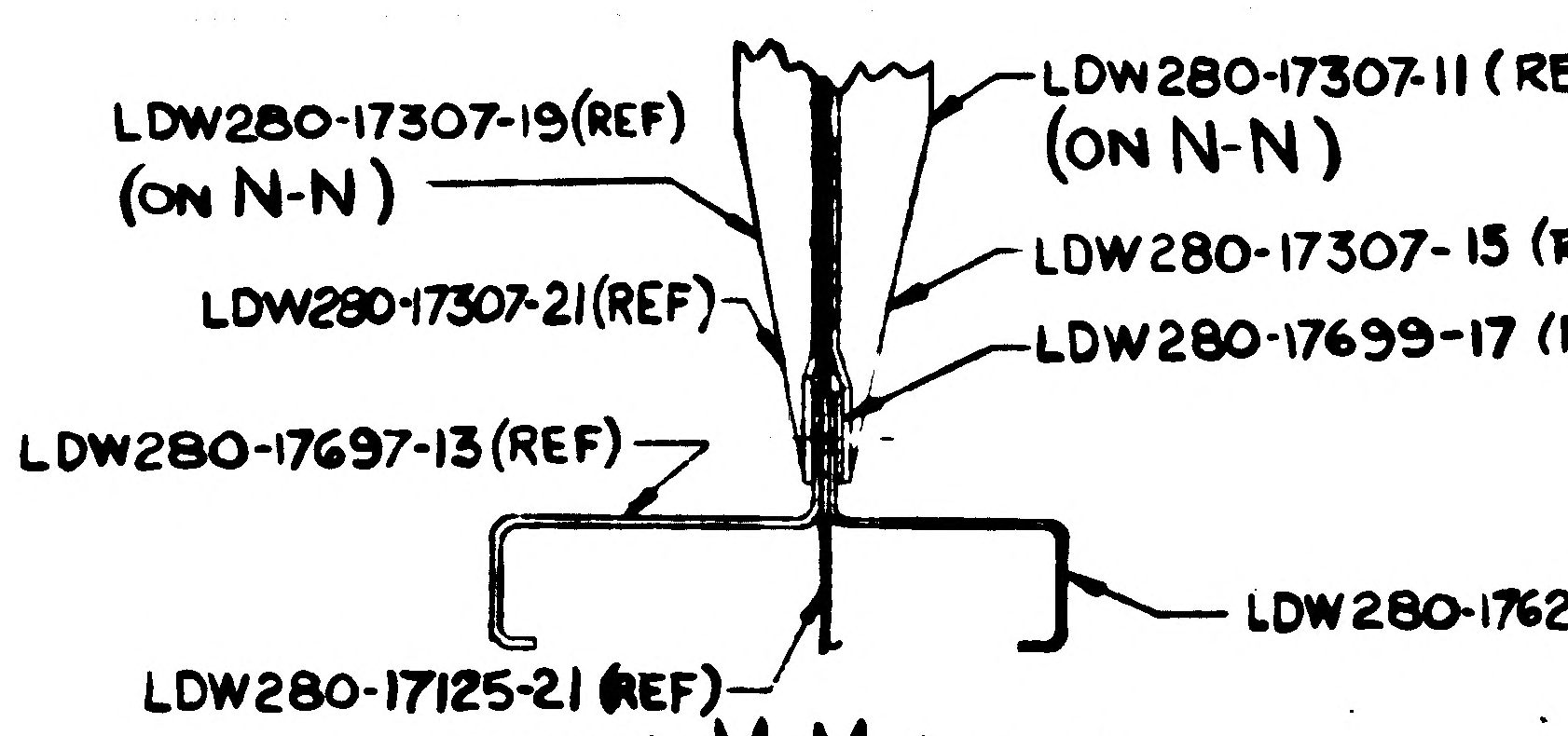
LDW280-17307-19(REF)
(ON N-N)
LDW280-17307-11(REF)
(ON N-N)
LDW280-17307-21(REF)
LDW280-17307-15 (REF)
LDW280-17699-17 (REF)
LDW280-17697-13(REF)
LDW280-17620-13(REF)
LDW280-17125-21(REF)
H

SECTION M-M (SHOWN)
(ZONE 6E SH 4)
SECTION N-N (IDENTICAL EXCEPT AS NOTED)
(ZONE 9E SH 4)

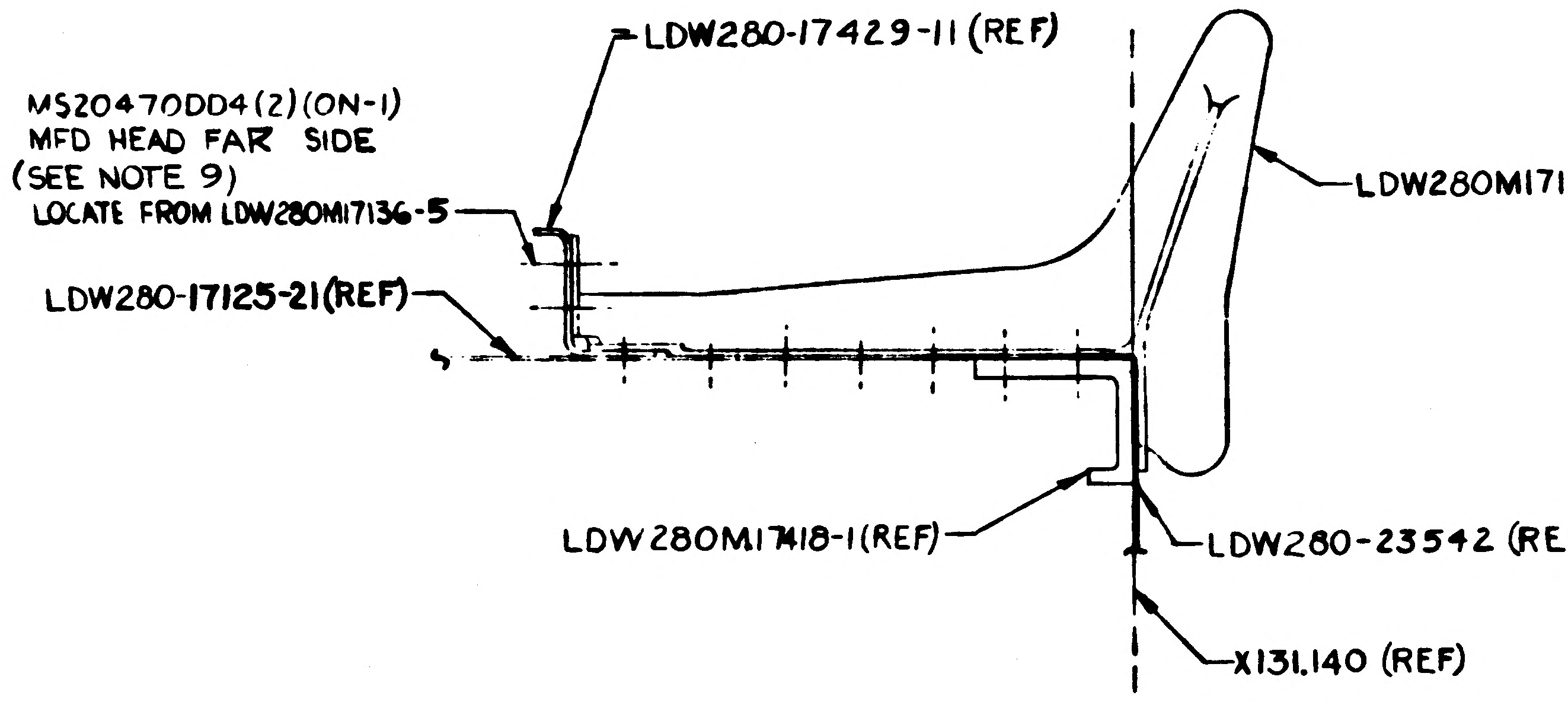
LDW280-17429-11 (REF)
MS20470DD4(2)(ON-1)
MFD HEAD FAR SIDE
(SEE NOTE 9)
LOCATE FROM LDW280M17136-5
LDW280M17136-5(REF)
LDW280-17125-21(REF)
LDW280M17418-1(REF)
LDW280-23542 (REF)
X131.140 (REF)
G

SECTION A-A
(ZONE 3C SH3)

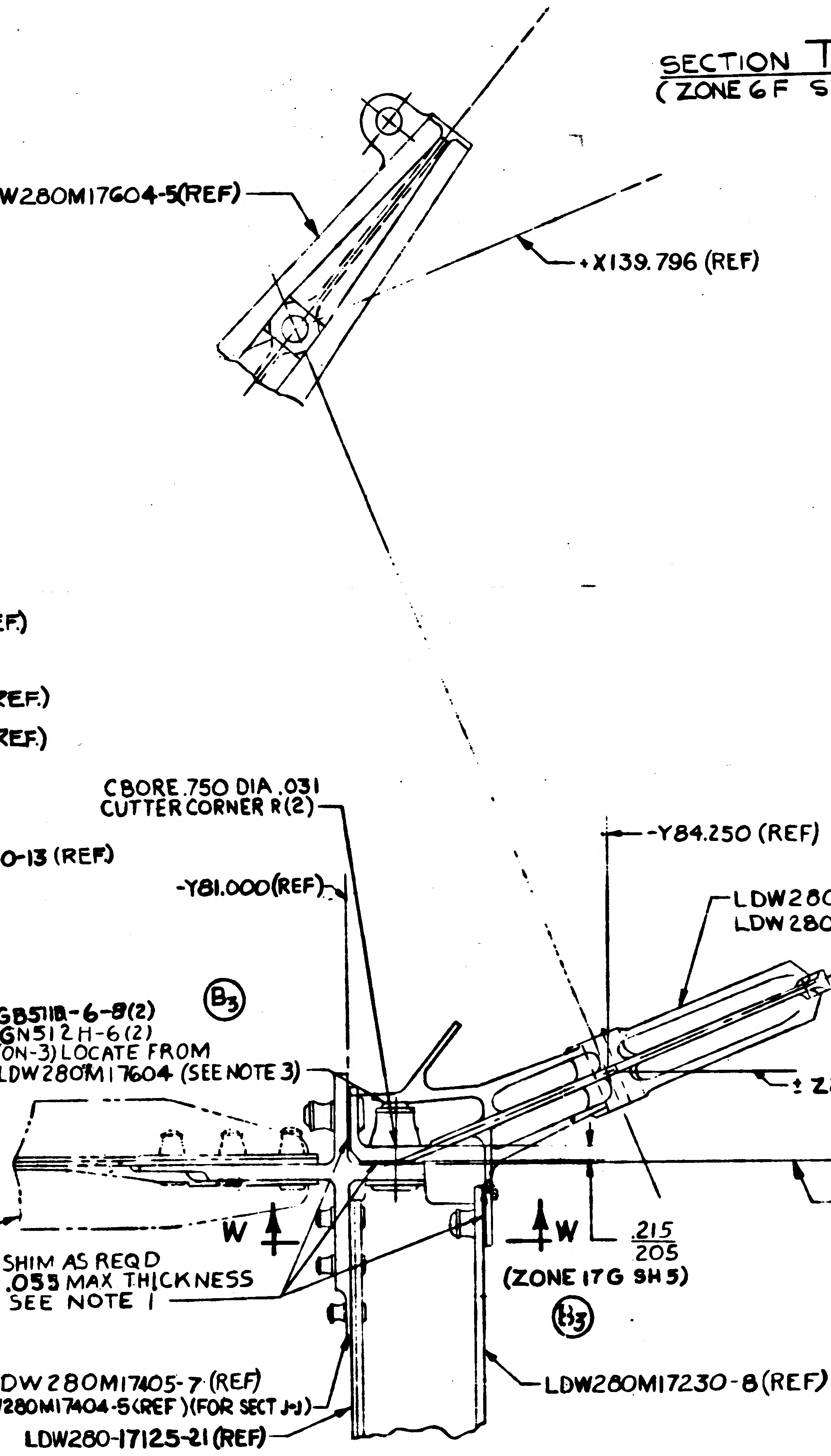
LDW280M17604-5(REF)
X139.796 (REF)
CBORE .750 DIA .031
CUTTER CORNER R(2)
-Y84.250 (REF)
-Y81.000(REF)
LDW280M17604-5(REF)
LDW280M17325-1(REF) ON J-J
B3
GB5118-6-8(2)
GN512H-6(2)
(ON-3) LOCATE FROM
LDW280M17604 (SEE NOTE 3)
± Z28.123 (REF)
∓Z27.000
LDW280-25533(REF)
LDW280-25530(REF)
W
W
.215
.205
SHIM AS REQD
.055 MAX THICKNESS
SEE NOTE 1
B3
(ZONE 17G SH5)
B3
LDW280M17405-7(REF)
LDW280M17404-5(REF)(FOR SECT J-J)
LDW280-17125-21(REF)
LDW280M17230-8(REF)

SECTION H-H (SHOWN)
(ZONE 4F SH 4)
SECTION J-J (OPP)
(ZONE 4A SH 3)

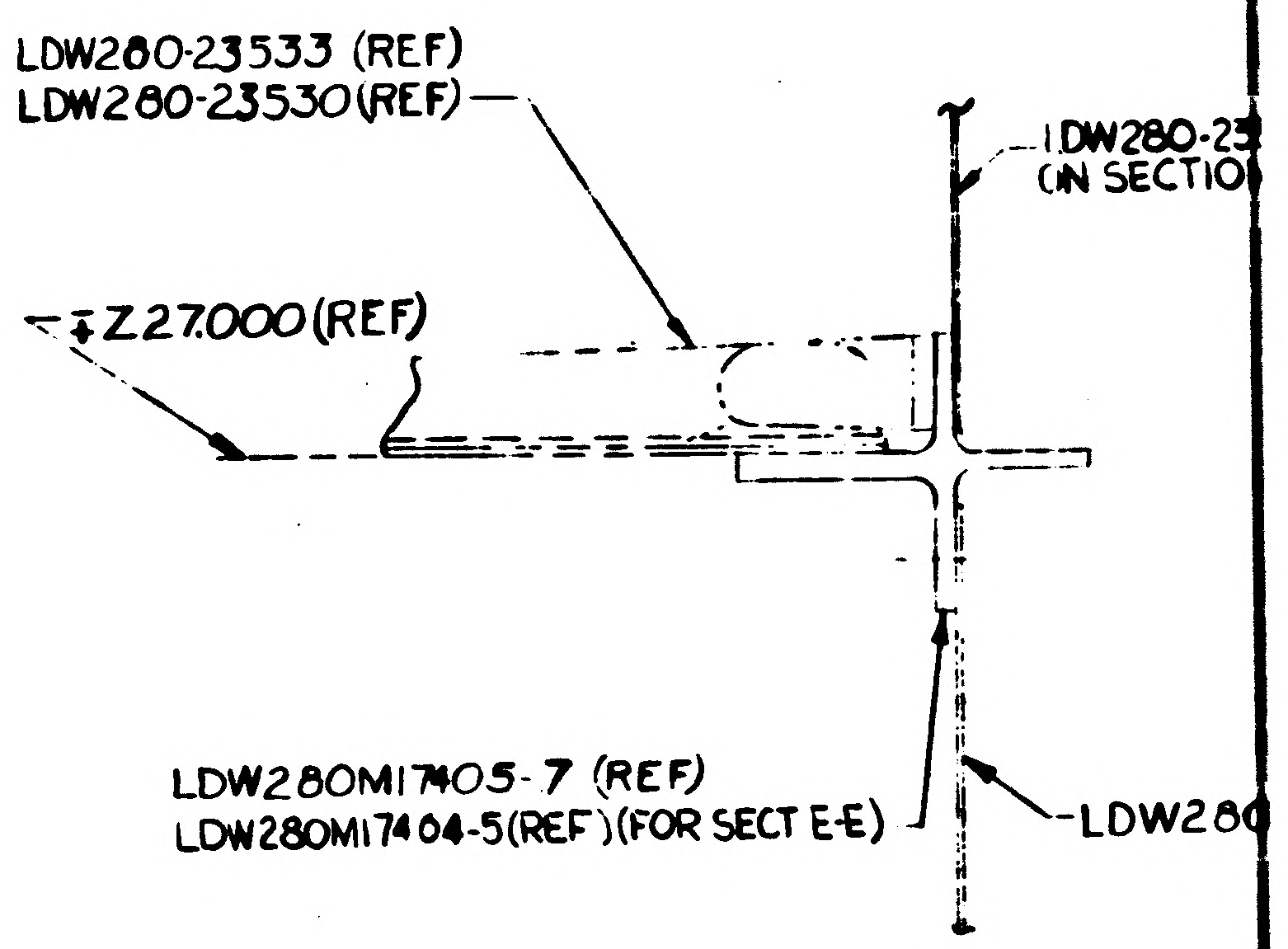
LDW280-23533 (REF)
LDW280-23530(REF)
LDW280-25
(ON SECTIO
∓Z27.000(REF)
LDW280M17405-7 (REF)
LDW280M17404-5(REF)(FOR SECT E-E)
LDW280

SECTION D-D (S
(ZONE 5F SH 4)
SECTION E-E (O
(ZONE 5A SH 3)

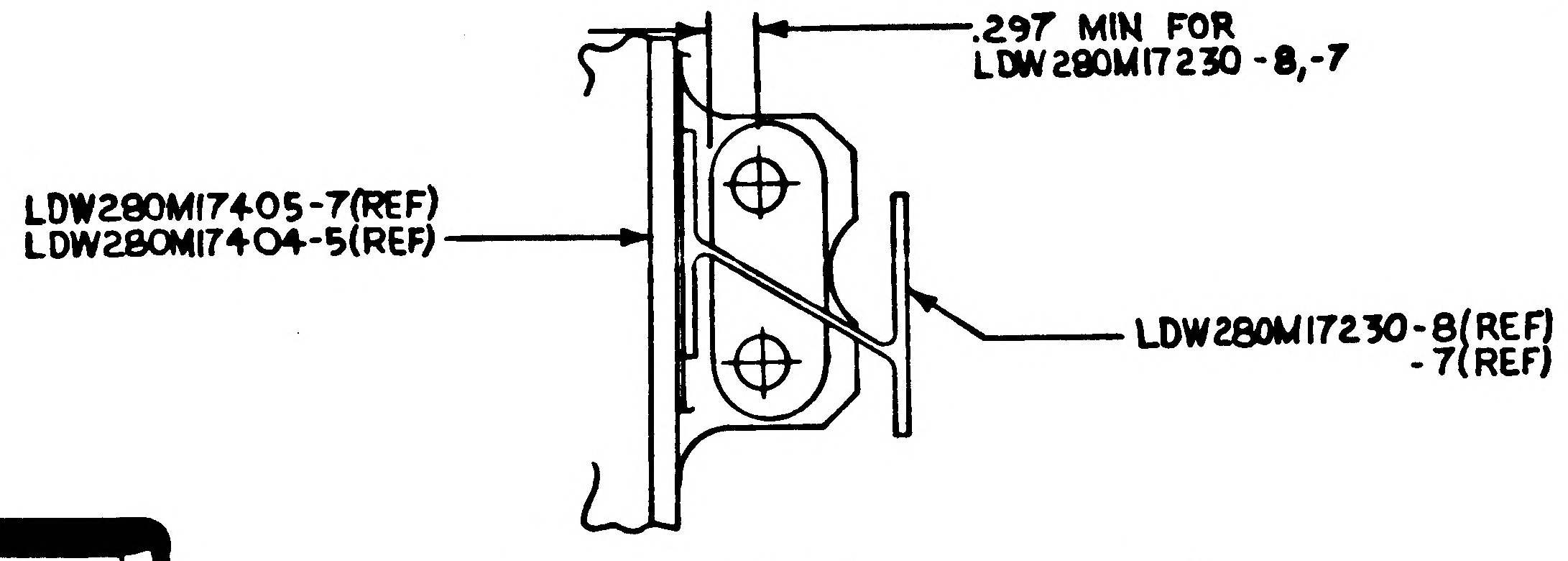
.297 MIN FOR
LDW280M17230-8,-7
LDW280M17405-7(REF)
LDW280M17404-5(REF)
LDW280M17230-8(REF)
-7(REF)

SECTION W-W (ZONE 18G SH5)
B3

01/03

NAS 9-1100

CODE IDENT NO. 26512
LDW280-52525 SH 5

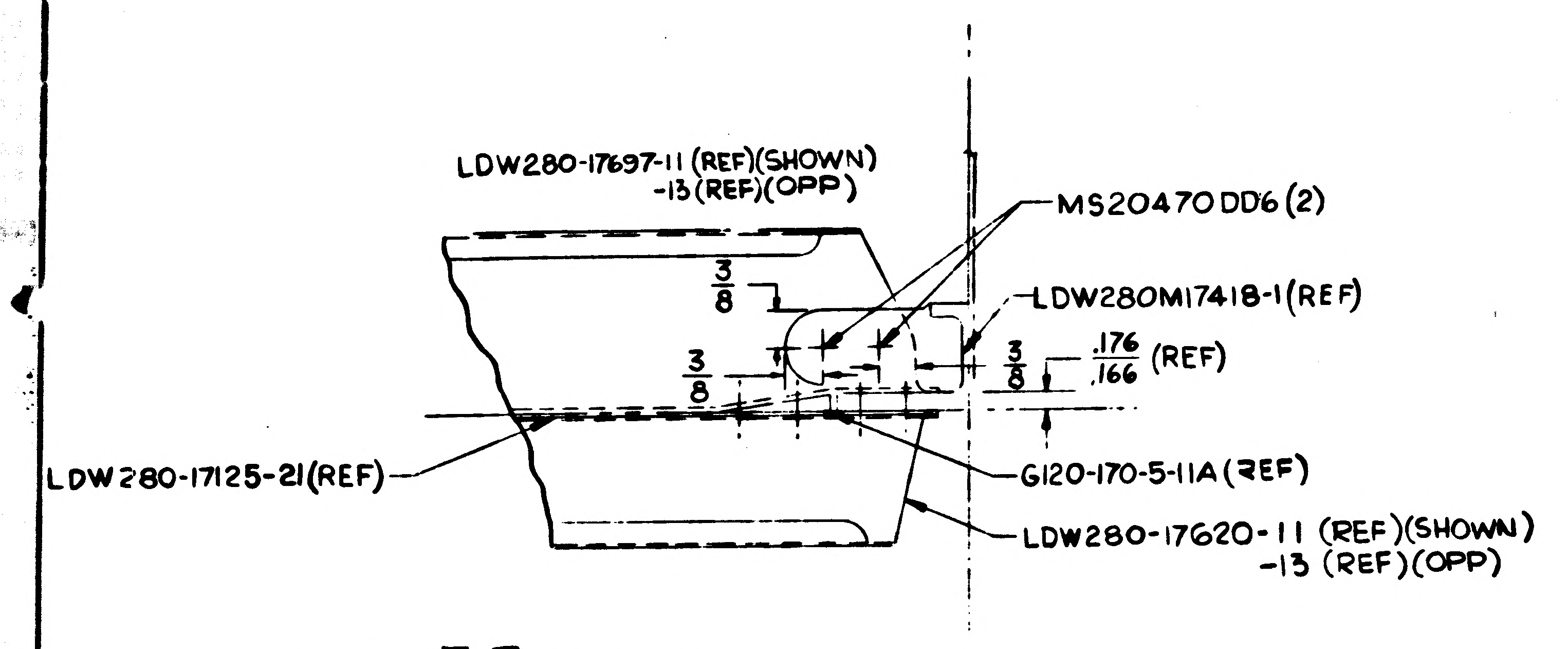
LDW280-17697-11 (REF)(SHOWN)
-13 (REF)(OPP)
MS20470DD6 (2)
LDW280M17418-1 (REF)
3/8
3/8
3/8
.176/.166 (REF)
LDW280-17125-21 (REF)
G120-170-5-11A (REF)
LDW280-17620-11 (REF)(SHOWN)
-13 (REF)(OPP)

SECTION F-F (SHOWN)
(ZONE 3B SH 3)
SECTION G-G (OPP)
(ZONE 3E SH 4)

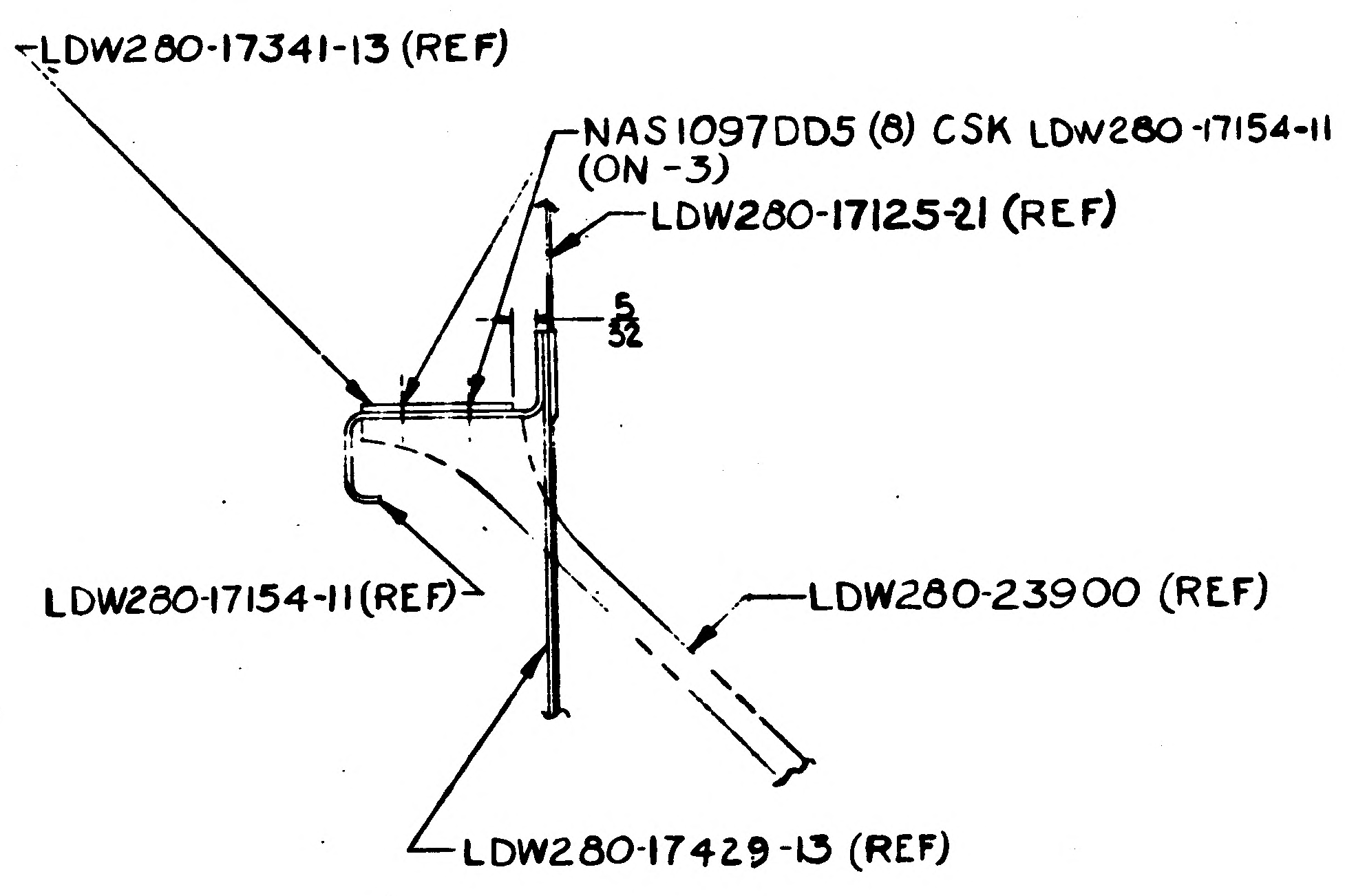
LDW280-17341-13 (REF)
NAS1097DD5 (8) CSK LDW280-17154-11
(ON -3)
LDW280-17125-21 (REF)
5/32
LDW280-17154-11 (REF)
LDW280-23900 (REF)
LDW280-17429-13 (REF)

SECTION R-R (SHOWN)
(ZONE 3C SH 3)
SECTION S-S (OPP)
(ZONE 3F SH 4)

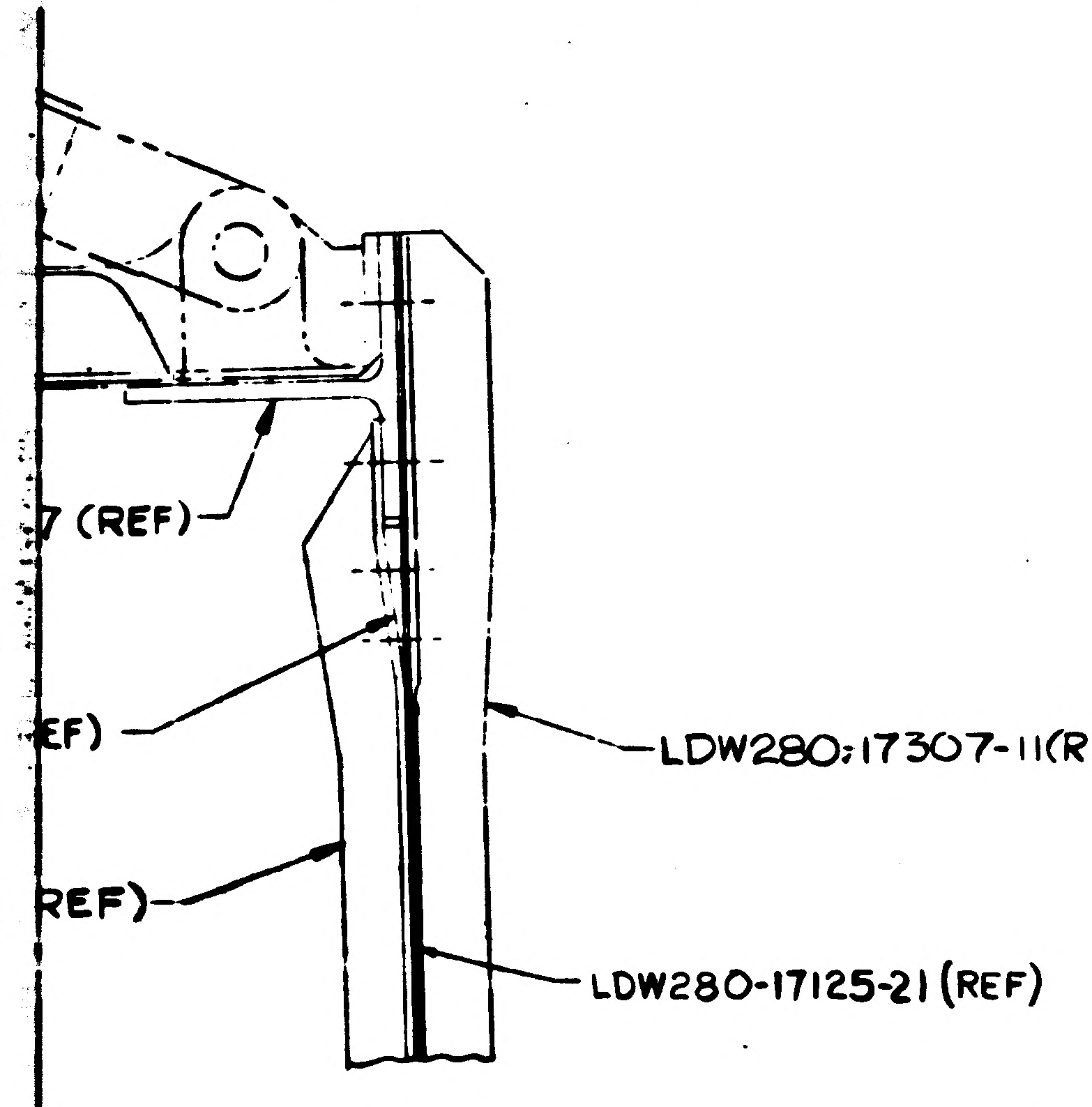
7 (REF)
EF)
REF)
LDW280-17307-11 (REF)
LDW280-17125-21 (REF)

SECTION V-V
(ZONE 9F SH 4)

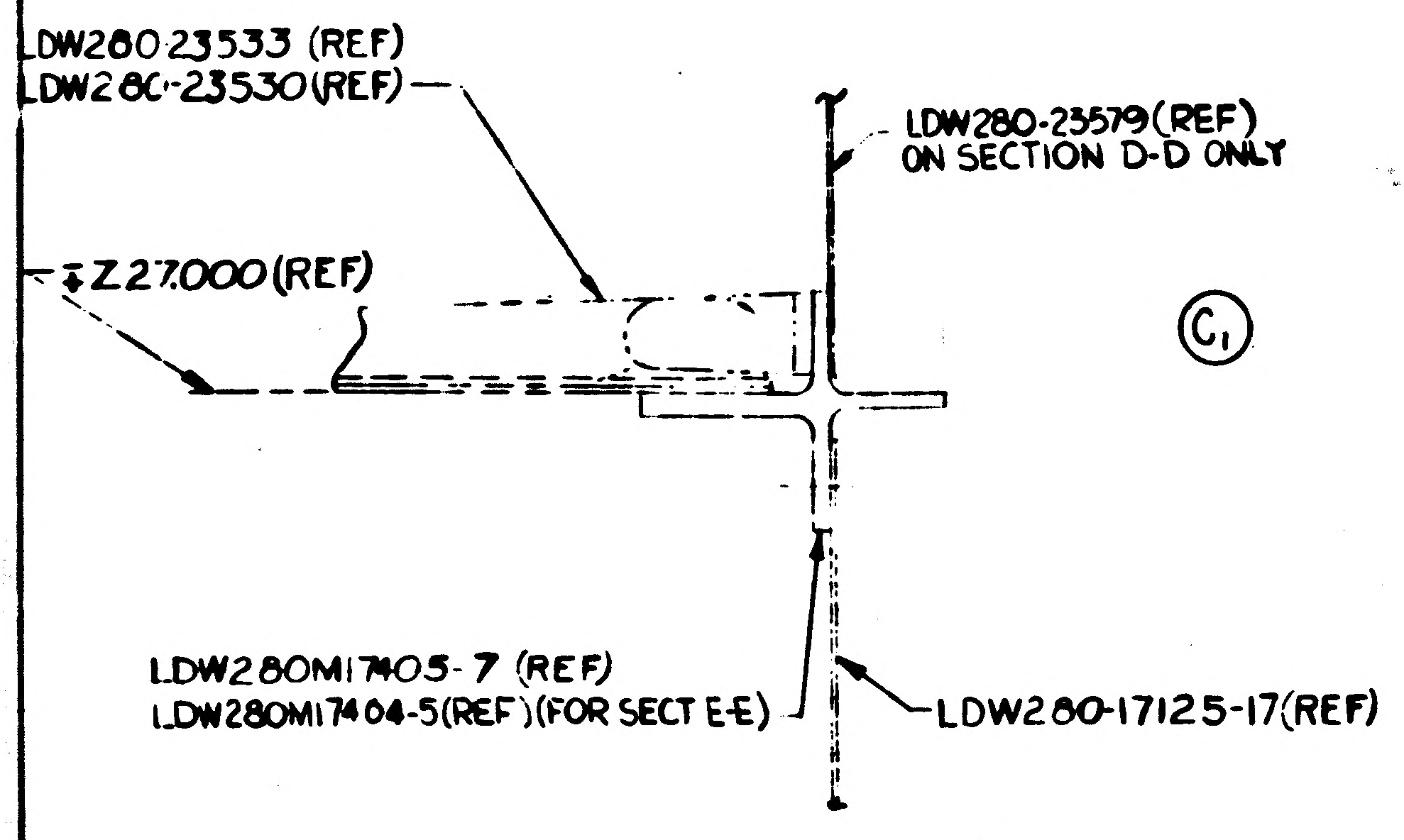
LDW280-23533 (REF)
LDW280-23530 (REF)
LDW280-23579 (REF)
ON SECTION D-D ONLY
+Z27.000 (REF)
C1
LDW280M17405-7 (REF)
LDW280M17404-5 (REF) (FOR SECT E-E)
LDW280-17125-17 (REF)

SECTION D-D (SHOWN)
(ZONE 5F SH 4)
SECTION E-E (OPP)
(ZONE 5A SH 3)

97 MIN FOR
W280M17230-8,-7

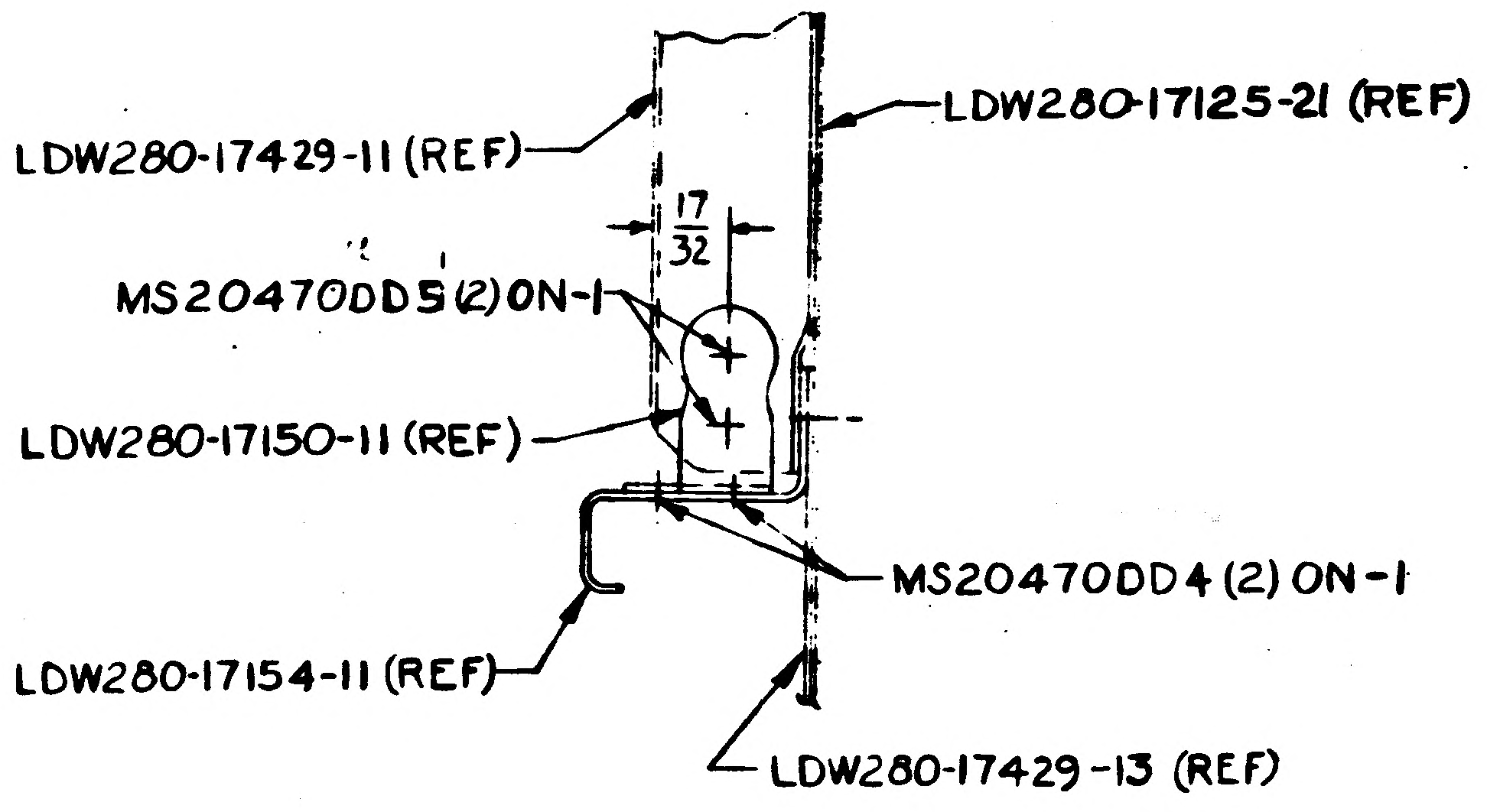
LDW280-17429-11 (REF)
LDW280-17125-21 (REF)
17/32
MS20470DD5 (2) ON -1
LDW280-17150-11 (REF)
MS20470DD4 (2) ON -1
LDW280-17154-11 (REF)
LDW280-17429-13 (REF)

SECTION P-P (SHOWN)
(ZONE 3C SHEET 3)
SECTION U-U (OPP)
(ZONE 4D SHEET 4)

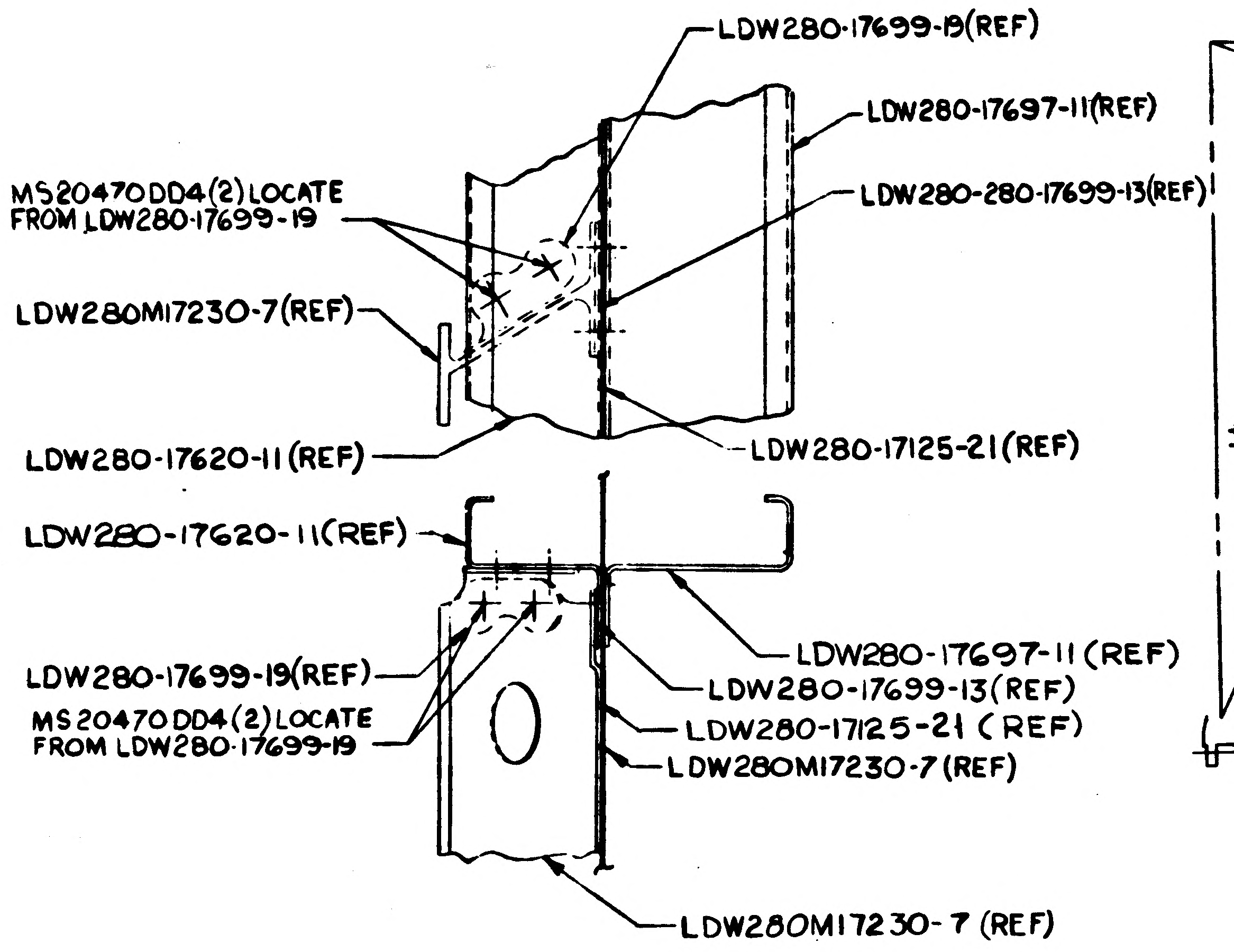
LDW280-17699-19 (REF)
LDW280-17697-11 (REF)
MS20470DD4 (2) LOCATE
FROM LDW280-17699-19
LDW280-280-17699-13 (REF)
LDW280M17230-7 (REF)
LDW280-17620-11 (REF)
LDW280-17125-21 (REF)
LDW280-17620-11 (REF)
LDW280-17697-11 (REF)
LDW280-17699-19 (REF)
LDW280-17699-13 (REF)
MS20470DD4 (2) LOCATE
FROM LDW280-17699-19
LDW280-17125-21 (REF)
LDW280M17230-7 (REF)
LDW280M17230-7 (REF)

SECTION K-K (SHOWN)
(ZONE 4B SH 3)
SECTION L-L (OPP)
(ZONE 4E SH 4)

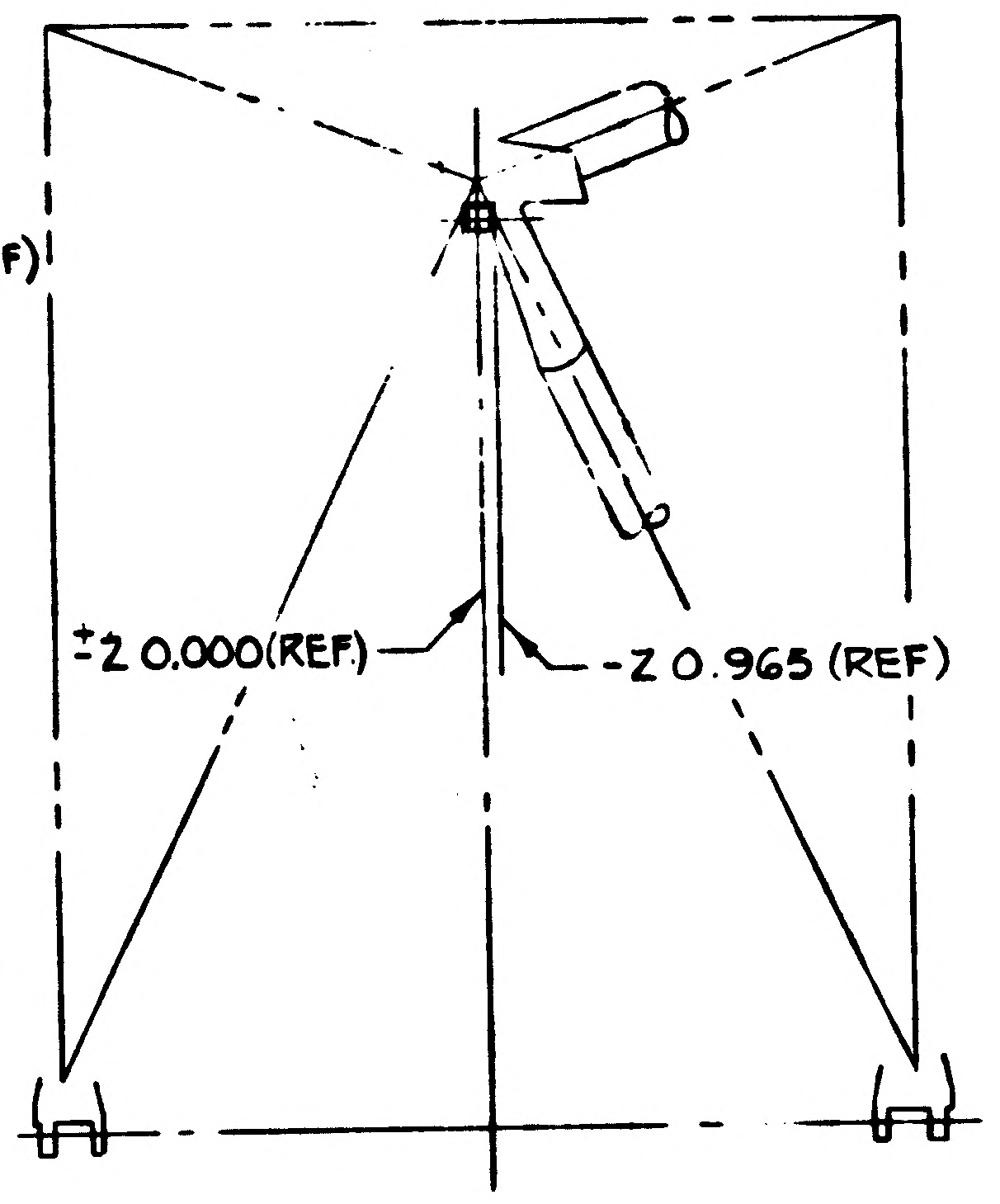
±Z 0.000 (REF)
-Z 0.965 (REF)

ENGRG INFO FOR OUTRIGGER ASSY
(SEE NOTE 3)
SCALE: NONE

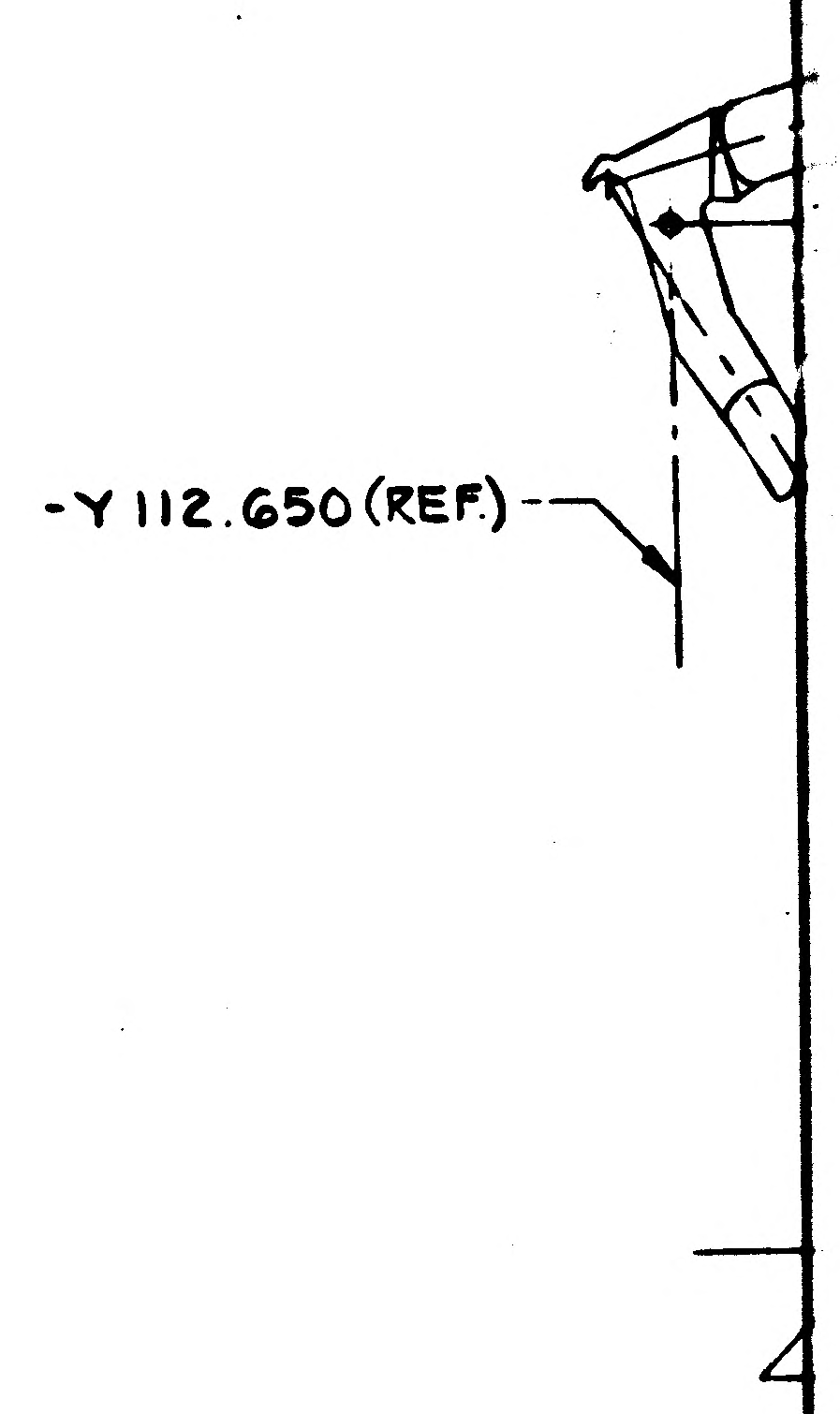
-Y 112.650 (REF)

LDW280M17230-8 (REF)
-7 (REF)

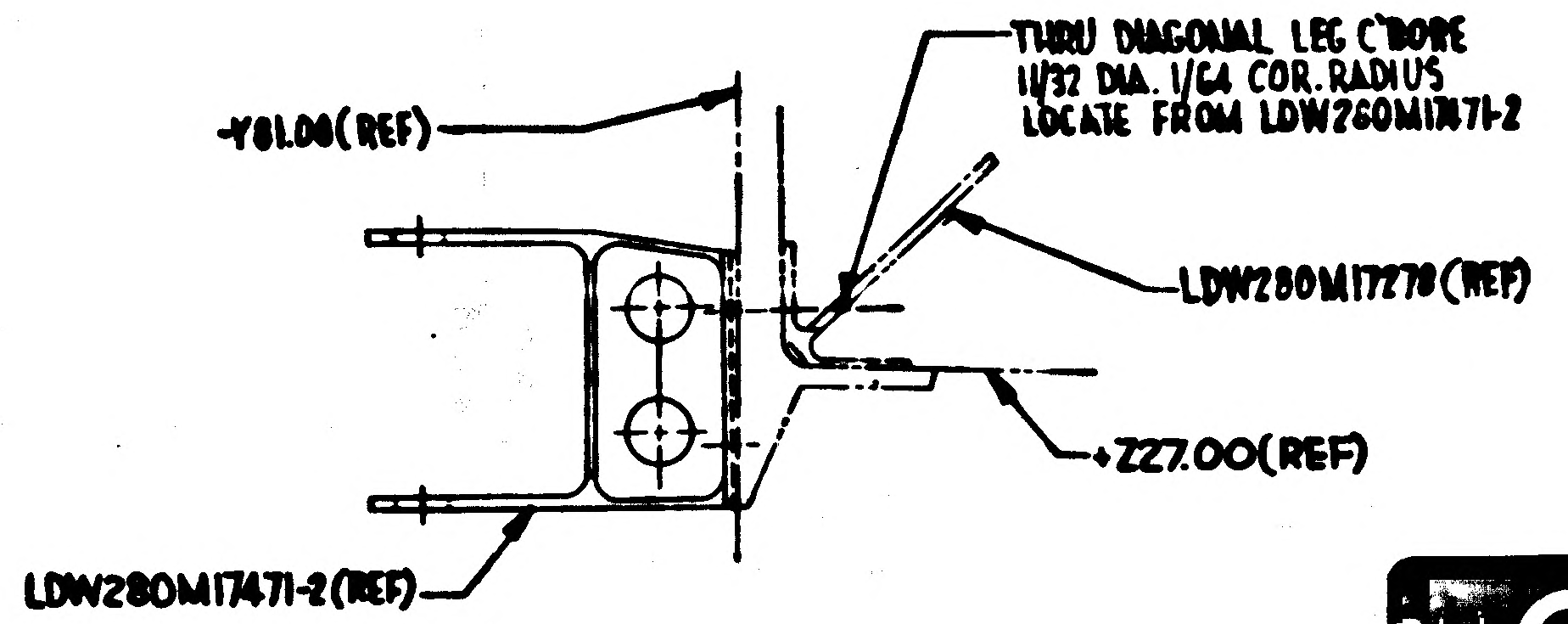
-Y81.06 (REF)
THRU DIAGONAL LEG C'BORE
11/32 DIA. 1/64 COR. RADIUS
LOCATE FROM LDW280M17471-2
LDW280M17270 (REF)
+Z27.00 (REF)
LDW280M17471-2 (REF)

SECTION Y-Y
(ZONE 4A SH 3)

(8G SH 5)

02/03 NAS 9-1100

MANUFACTURING OPERATIONS UNLESS OTHERWISE SPECIFIED NOTES CHECKED ✓ APPLY TO THIS DWG
PART NUMBER AND ALL OTHER MARKINGS IN REGION MARKED ☒ USE BOTH SIDES IF NECESSARY.
FILLET AND INSIDE CORNER RADII TOLERANCES .016R TO .062R ± .010 .063R TO .250R ± .015 OVER .250R ± .030
DEPTH SHOWN FOR TAPPED HOLES IS FULL THDS. 2-3 IMP. THDS. BEYOND PERMISSIBLE
EXTERNAL THREAD LENGTH SHOWN INCLUDES 2 IMPERFECT THREADS MAX.
DO NOT CADMIUM PLATE & PAINT HOLES OR SURFACES MARKED WITH DOUBLE ASTERISK.
MISMATCH STEP OF ± .005 PERMISSIBLE DUE TO CHANGE OF CUTTERS AT INSIDE INTERSECTING SURFACES.
DIAMETERS MARKED MUST BE CONCENTRIC WITHIN FULL INDICATOR READING.
HOLES MUST BE KEPT FREE OF CHROME PLATING SOLUTION.
ALL DIMENSIONS SHOWN TO BE MET AFTER CADMIUM PLATING. THICKNESS OF PLATE .0003 MIN TO .0005 MAX MIN THICKNESS TO BE .0002 ON THREADED AREAS. NO ALLOWANCES FOR PLATING IN HOLES
125 √ SURFACE ROUGHNESS INCLUDING REAMED HOLES PER MIL STD-10
200 √ FOR ALL DRILLED HOLES
REMOVE ALL BURRS. BREAK ALL EDGES .015-.031
INSPECTION INFORMATION MINIMUM PERMISSIBLE AVERAGE EDGE DISTANCE MARKED IS
SYMBOL √ DENOTES SURFACE TO BE MACHINED
UNLESS OTHERWISE SPECIFIED TOLERANCE ON FLANGES IS ± 1/32
LENGTHS OF AN, NAS & MS AL ALY RIVETS SHORTER THAN 1 INCH ARE NOT SPECIFIED
TOLERANCE ON LOFTED DELINEATIONS IS

DWG SIZE 34x106

PRINTING INFO ONLY

FULL SIZE SHEET AREA (36x108) =
½ SIZE SHEET AREA (¼ OF FULL) =

PRINT TRIM LINE

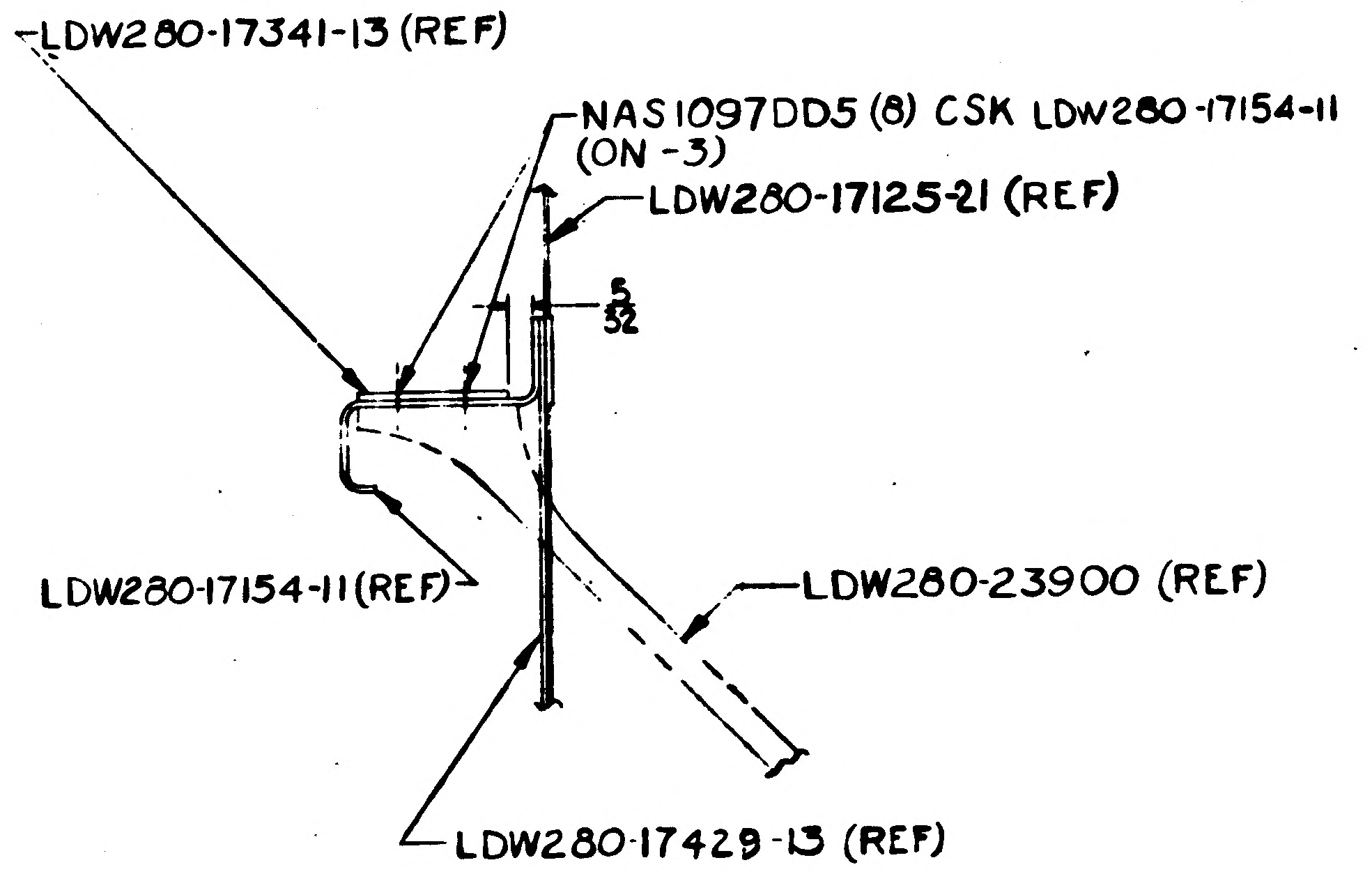
LDW280-17341-13 (REF)
NAS1097DD5 (8) CSK LDW280-17154-11 (ON -3)
LDW280-17125-21 (REF)
5/32
LDW280-17154-11 (REF)
LDW280-23900 (REF)
LDW280-17429-13 (REF)

SECTION R-R (SHOWN)
(ZONE 3C SH 3)
SECTION S-S (OPP)
(ZONE 3F SH 4)

J

H

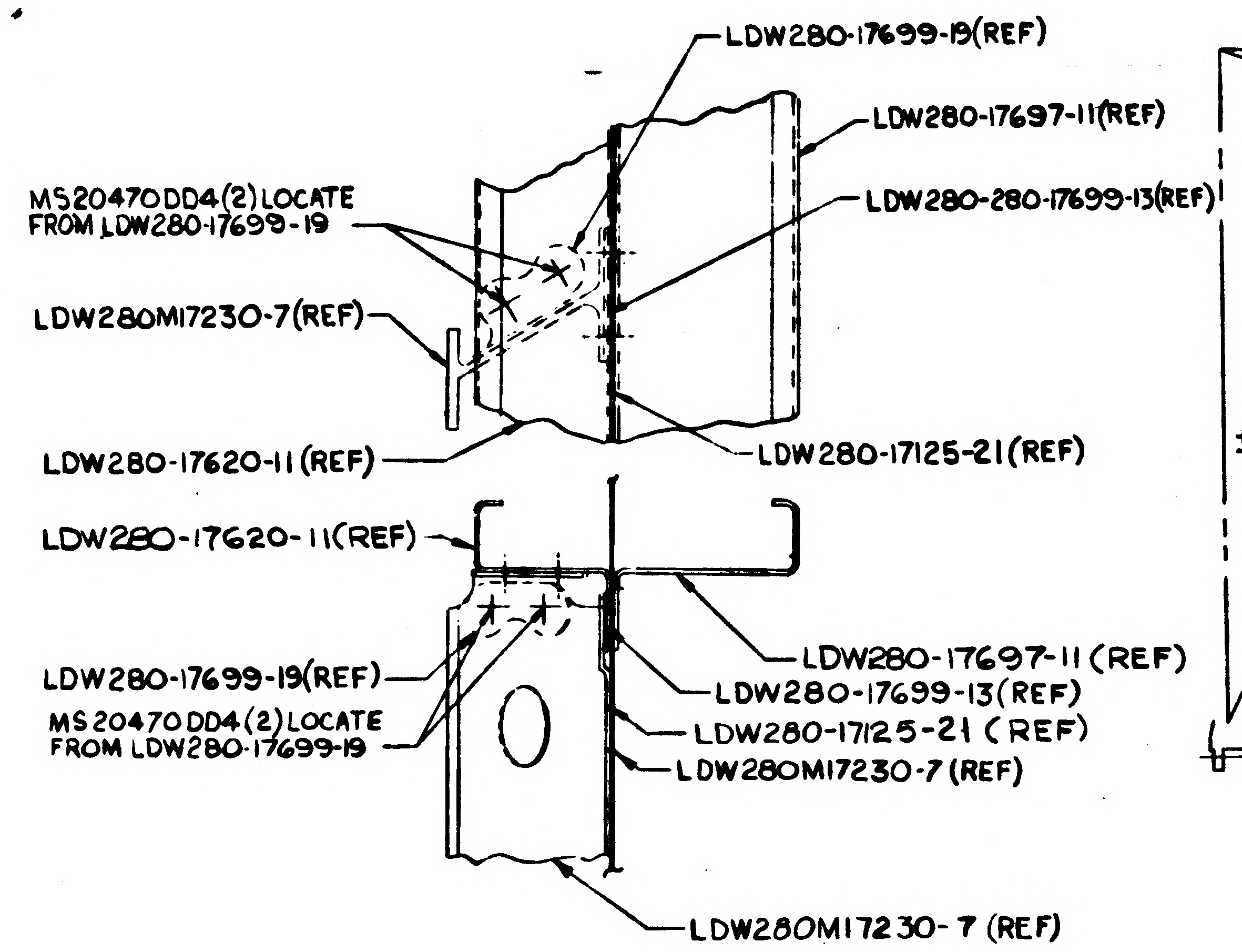
LDW280-17699-19(REF)
LDW280-17697-11(REF)
MS20470DD4(2) LOCATE FROM LDW280-17699-19
LDW280-280-17699-13(REF)
LDW280M17230-7(REF)
LDW280-17620-11 (REF)
LDW280-17125-21(REF)
LDW280-17620-11(REF)
LDW280-17697-11 (REF)
LDW280-17699-19(REF)
LDW280-17699-13(REF)
MS20470DD4(2) LOCATE FROM LDW280-17699-19
LDW280-17125-21 (REF)
LDW280M17230-7 (REF)
LDW280M17230-7 (REF)

SECTION K-K (SHOWN)
(ZONE 4B SH 3)
SECTION L-L (OPP)
(ZONE 4E SH 4)

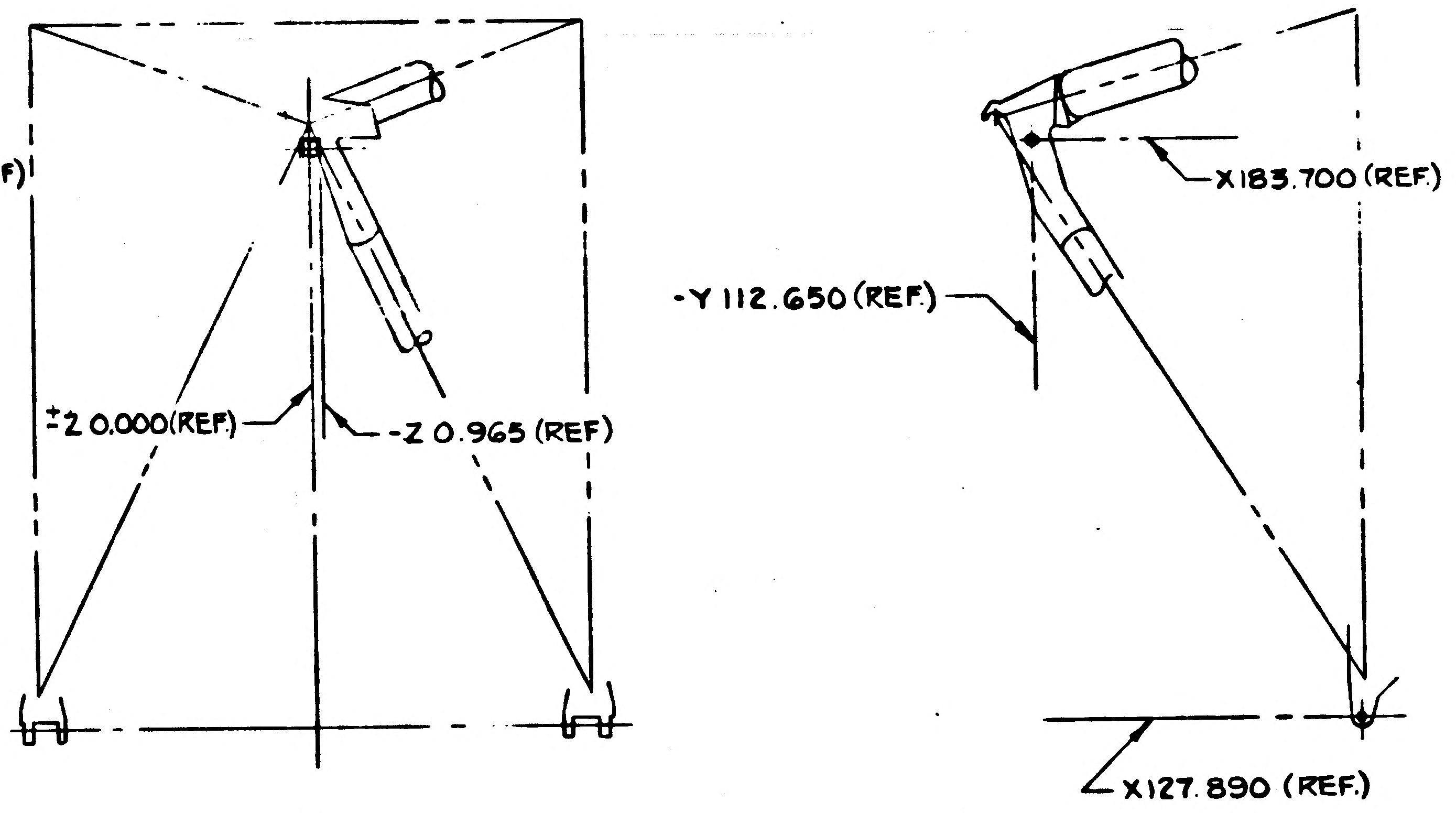
±Z 0.000(REF)
-Z 0.965 (REF)
X183.700 (REF)
-Y 112.650 (REF)
X127.890 (REF)

ENGRG INFO FOR OUTRIGGER ASSY
(SEE NOTE 3)
SCALE: NONE

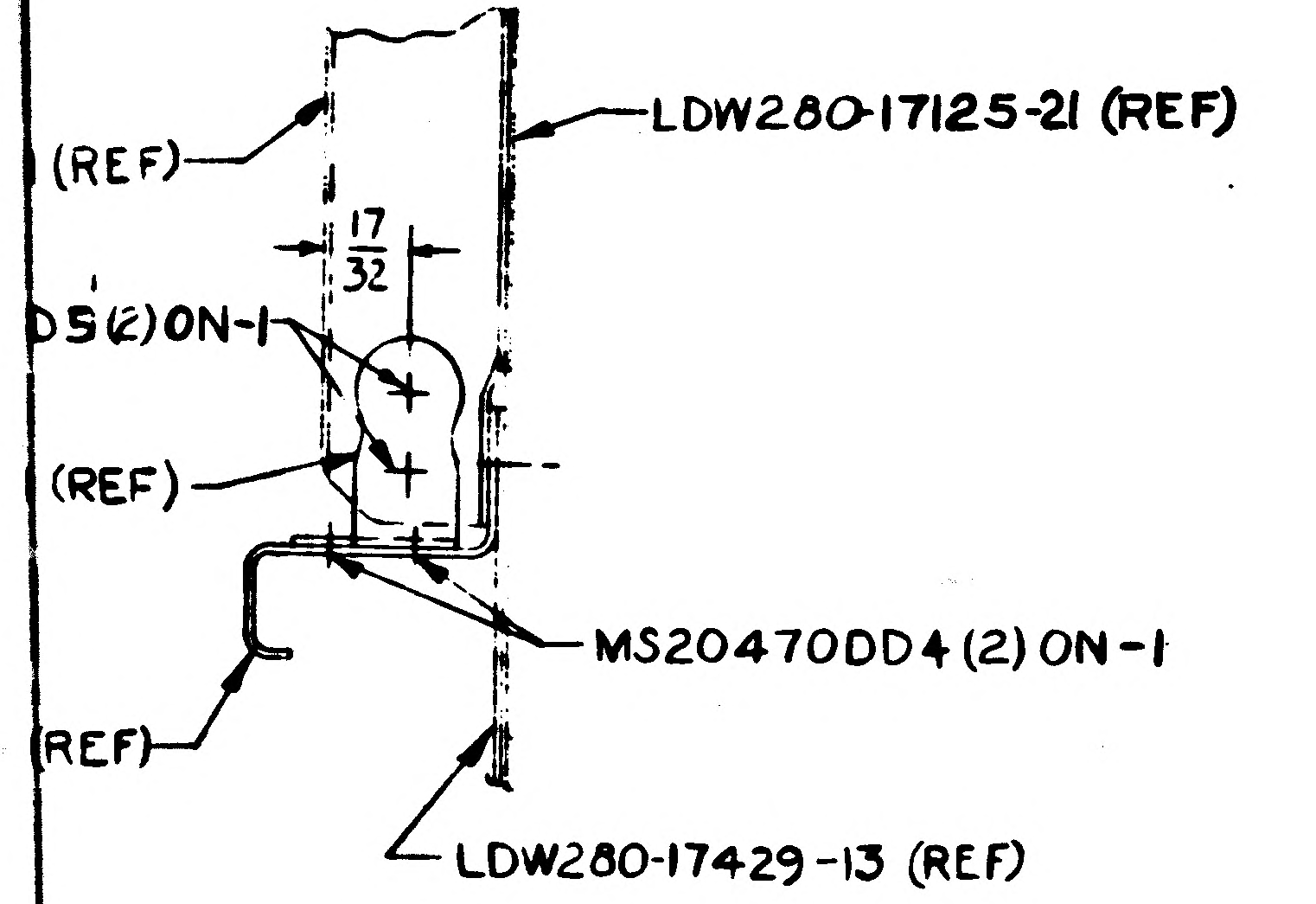
(REF)
LDW280-17125-21 (REF)
17/32
D5(2) ON-1
(REF)
MS20470DD4(2) ON-1
(REF)
LDW280-17429-13 (REF)

SECTION P-P (SHOWN)
(ZONE 3C SHEET 3)
SECTION U-U (OPP)
(ZONE 4D SHEET 4)

G

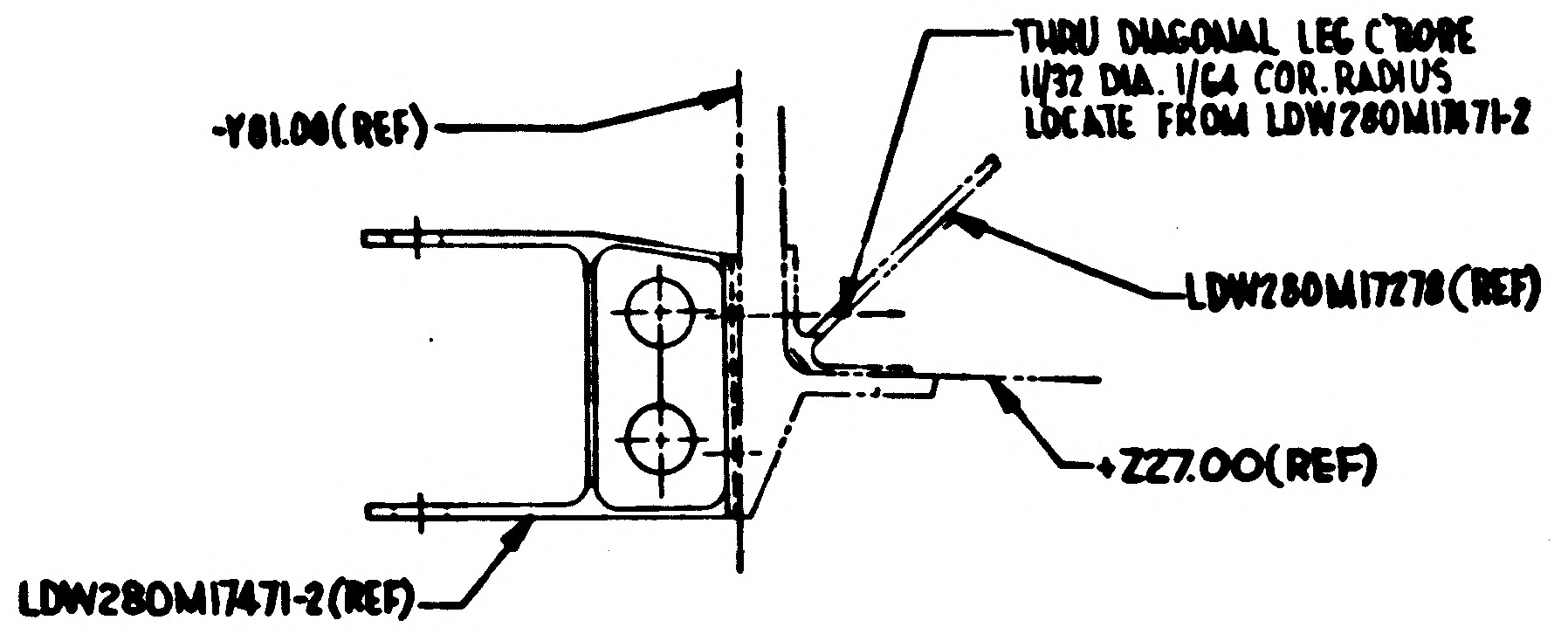
-Y81.06(REF)
THRU DIAGONAL LEG C'BORE 11/32 DIA. 1/64 COR. RADIUS LOCATE FROM LDW280M17471-2
LDW280M17278(REF)
+Z27.00(REF)
LDW280M17471-2(REF)

SECTION Y-Y
(ZONE 4A SH 3)

03/03 NAS 9-1100

LDW280-52525 C

LDW280-52525 C

CODE IDENT NO. 26512
LDW280-52525 SH 5

	GRUMMAN AIRCRAFT ENGRG CORP. BETHPAGE, L. I., NEW YORK			
LM	SIZE J	CODE IDENT NO. 26512	LDW280-52525	C
MODEL OR END ITEM	SCALE FULL		SHEET 5	

©

NOT FOR PHOTO REPRODUCTION

THIS IS AN ORIGINAL DWG 3FRAMES

ENG 22.2 REV 3-65

GRUMMAN AIRCRAFT ENGINEERING CORP.
CODE IDENT NO. 26512
ENGINEERING ORDER

~~DWG.~~ NO.	LEO 280	EO NO.	422
CONTROL INFO NO.	LM 5-11469		

IN F/D & B/M : REMOVE LDW280M17141-3 FROM THE FOLLOWING DWGS:

DWG. NO	* INSTL NO.	TITLE	EFF	CHG. NO.
LDW280 -28524	-5	~~BULKHD INSTL~~ ~~D/S R.H~~	LM1 (31)	A4
-52524	-1		LM2 (32)	C1
-52524	-5		LM3 (33)	
-54524	-1		LM4 (34) THRU LM15 (45)	D1
-25525	-7	~~BULKHD INSTL~~ ~~D/S L.H~~	LM1 (31)	D1
-52525	-1		LM2 (32)	C1
-52525	-5		LM3 (33)	
-54525	-1		LM4 (34) THRU LM6 (36)	C1
-25526	-7	BULKHD INSTL ~~FWD D/S~~	LM1 (31)	C7
-52526	-1		LM2 (32)	C2
-52526	-5		LM3 (33)	
-25527	-9	BULKHD INSTL D/S AFT	LM1 (31)	D1
-23527	-5		LM2 (32)	D2
-23527	-9		LM3 (33)	
-54527	-1		LM4 (34) THRU LM15 (45)	C-2

RELEASED BY LIAISON

SHOP NOTE ONLY: (DO NOT INCOP. ON DWG)
PLUG HOLES WITH MS20470DD

PRE-FEAT

REF LDW280-M17141
CONT # LM5-11468

DETAIL SPEC REQ	☐	CL II ENGRG CHG	☐	CL I ENGRG CHG	☐								5 D GAEC C EO RELEASE
REASON FOR EO: ELIMINATION OF LANDING GEAR BUNGEE SUPT PER LCR 750				DESCRIPTION OF EO: ON * INSTL; REMOVED LDW280M17141-3									E
MODEL	EFFECTIVITY			DRAWING CHANGE REQD		DISPOSITION OF PARTS		APPROVED BY	WT			~	WB
	PROCURING ACTIVITY NO.	GAEC UNIT NO.	SUB CONTR UNIT NO.					DATE	12/19/66			~	2/5
				REVISE DWG ✓	RECORD EO	REWORK ✓	SCRAP	6	VOI	SUPPORT	RELIAB. GROUP	GROUP LEADER	STRESS GROUP
LM		NOTED		PRIORITY C	DRAWING TITLE: NOTED							~~DRAWING NO.~~ LEO-280	

LIAISON ENGRG	PROJ ENGRG	~~GOVT~~
CH	WP	A
12-19	12-29	12-19-66

EO NO. 422

ISSUED BY Don Ragas X6454 SECTION VDI GROUP NO. 335 PL. 5

01

NAS 9-1100

ENG 32.1 REV 3-65

B

GRUMMAN AIRCRAFT ENGINEERING CORP.
CODE IDENT NO. 26512
ENGINEERING ORDER

DWG. NO. LDW280-52525		EO NO. C2
CONTROL INFO NO. LDW280A 7390		

FOR -3 ASSY REPLACE LDW280-23516-5
WITH LDW280-52525-9

DETAIL SPEC REQ		CL II ENGRG CHG		CL I ENGRG CHG	✓	LCD-1629	5

REASON FOR EO	DESCRIPTION OF EO	Ⓡ GAEC EO RELEASE
UPPER OUTRIGGER STRUTS UNDERSTRENGTH AS MANUFACTURED	FOR -3 REPLACED LDW280-23516-5 WITH LDW280-23516-9	JK 6/10/67

MODEL	EFFECTIVITY			DRAWING CHANGE REQD		DISPOSITION OF PARTS		APPROVED BY							
	PROCURING ACTIVITY NO.	GAEC UNIT NO.	SUB CONTR UNIT NO.	✓		-3		DATE				6/8/67	6/9/67		6/8/67
LM		LM-2 (32)		REVISE DWG	RECORD EO	REWORK	SCRAP	5		SUPPORT	RELIAB. GROUP	GROUP LEADER	STRESS GROUP	LIAISON ENGRG	PROJ ENGRG

PRIORITY	DRAWING TITLE	DRAWING NO.	EO NO.
C	BULKHEAD INSTL - DESCENT STAGE L. H. END	LDW280-52525	C2

ISSUED BY H. PALLMEYER / J. STRAKOSCH SECTION VEH DES INT GROUP NO. 335 PL 25

01

NAS 9-1100

ENG 32.1 REV 3-65

GRUMMAN AIRCRAFT ENGINEERING CORP.
CODE IDENT NO. 26512
ENGINEERING ORDER

DWG. NO. LEO 280		EO NO. 702
CONTROL INFO NO. LDW280 A 9004		

ON DASH NO'S * OF THE FOLLOWING DWGS,

a) IN B/M, ADD GT535AC-08B, GT535AC-16B, & GT535AC-32B TAPES, QTY EACH 'AS REQD'

b) IN F/D, ADD NOTE ☐: UPON COMPLETION OF BULKHEAD INSTL, ADD TAPE PER LPC 280-41

	DRAWING	TITLE	EFF	CHANGE
✓	LDW280-52524-1,-5	BULKHEAD INSTALLATION D/S-R.H. END	LEM-2(32)	C3
✓	↕ -52525-1,-5	↕ -L.H. END	AND	C3
	↕ -52526-1,-5	↕ -FWD END	LEM-3(33)	C4
	LDW280-23527-9	BULKHEAD INSTALLATION D/S-AFT END	LM-3(33)	D10

☐ USE NEXT AVAILABLE NOTE NUMBER

DETAIL SPEC REQ		CL II ENGRG CHG		CL I ENGRG CHG	✓	LCD 1997	5

REASON FOR EO	INCREASE CRACK RESISTANCE OF WEBS	DESCRIPTION OF EO	ON * IN B/M, ADDED GT535AC-08B, GT535AC-16B, & GT535AC-32B TAPES AS REQD. IN F/D, ADDED NOTE ☐	Ⓡ GAEC EO RELEASE JK 9/7/7

MODEL	PROCURING ACTIVITY NO.	GAEC UNIT NO.	SUB CONTR UNIT NO.
	EFFECTIVITY		
LM		NOTED	

DRAWING CHANGE REQD		DISPOSITION OF PARTS		APPROVED BY								
✓		✓		DATE	8/31/67			8/31/67	9/1/67		9/1/67	
REVISE DWG	RECORD EO	REWORK	SCRAP	8/30/67	VDI	SUPPORT	RELIAB. GROUP	GROUP LEADER	STRESS GROUP	LIAISON ENGRG	PROJ ENGRG	~~GOVT~~

PRIORITY	DRAWING TITLE	DRAWING NO.	EO NO.
C	NOTED	LEO 280	702

ISSUED BY 1/8 J. LANG / J. STRAKOSCH X1153 SECTION VDI GROUP NO. 335 PL 25

01 NAS 9-1100

ENG 32.2 REV 3-65

GRUMMAN AIRCRAFT ENGINEERING CORP.
CODE IDENT NO. 26512
ENGINEERING ORDER *

DWG. NO. LDW280-52525
EO NO. C4
CONTROL INFO NO. LDW280A-9605

THIS EO IS IN CONJUNCTION WITH "A" REV OF LDW280-53501

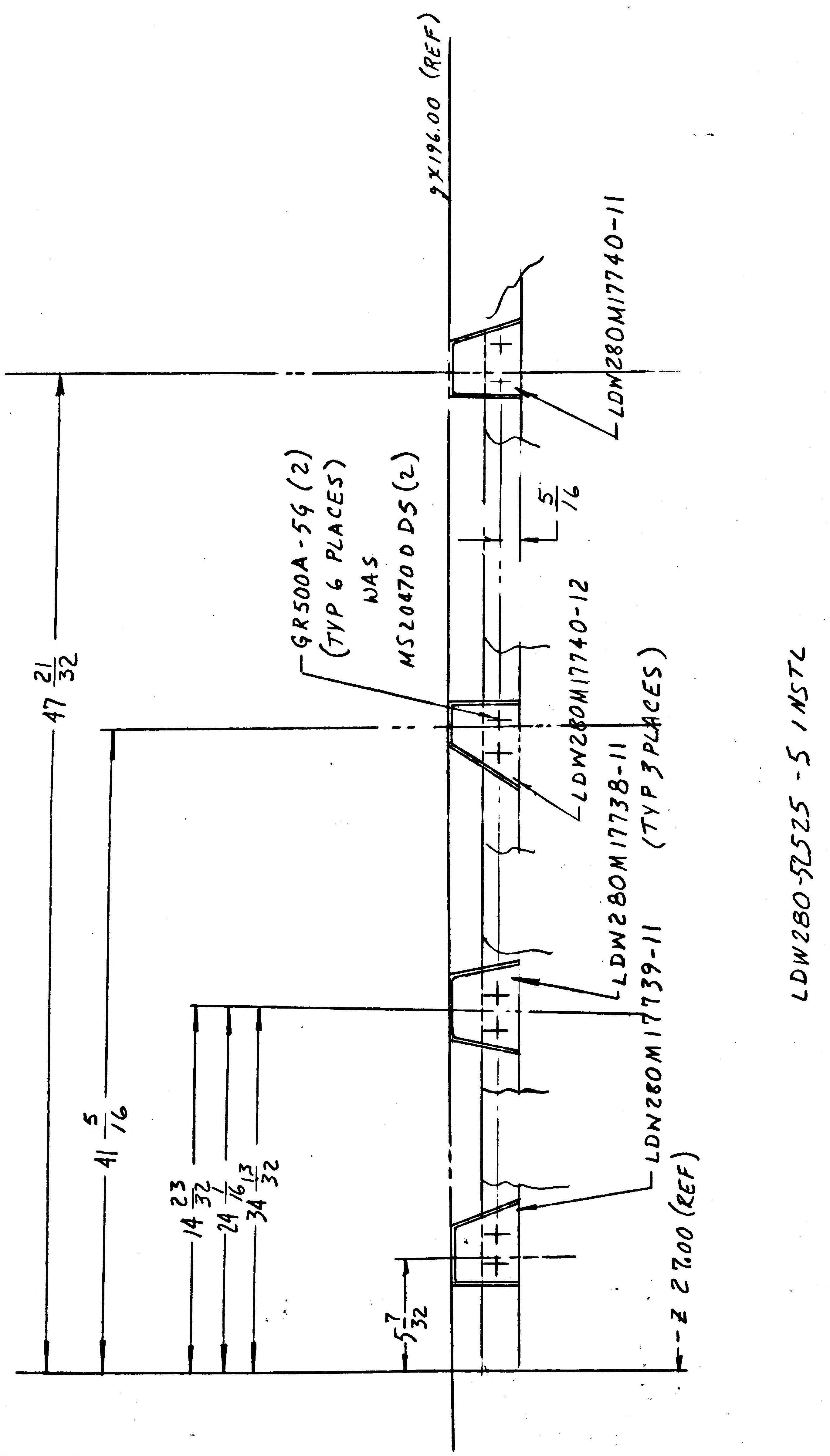

9X196.00 (REF)
LDW280M17740-11
5/16
GR500A-5G (2)
(TYP 6 PLACES)
WAS
MS20470DD5 (2)
LDW280M17740-12
LDW280M17738-11
(TYP 3 PLACES)
LDW280M17739-11
LDW280M17739-11
Z 27.00 (REF)
47 21/32
41 5/16
14 23/32
24 1/16
34 13/32
5 7/32
LDW280-52525 -5 INSTL

DETAIL SPEC REQ		CL II ENGRG CHG		CL I ENGRG CHG	✓	LCD1244

REASON FOR EO: INCORRECT N/A CALLOUT FOR F.I.T.H. SUPTS.

DESCRIPTION OF EO: ON-5
ADDED LDW280M17738-11 (3), LDW280M17739-11 & LDW280M17740-11 & -12, GR500A-5G (12) WAS MS20470DD5(R)

GAEC EO RELEASE: JK 10/21/67

MODEL	PROCURING ACTIVITY NO.	GAEC UNIT NO.	SUB CONTR UNIT NO.
LM		LM3 (33)	

DRAWING CHANGE REQD: REVISE DWG ✓ | RECORD EO
DISPOSITION OF PARTS: REWORK ✓ | SCRAP

			SUPPORT	RELIAB. GROUP	GROUP LEADER	STRESS GROUP	LIAISON ENGRG	PROJ ENGRG	GOVT
APPROVED BY									
DATE	10/17/67				10/17/67	10/16/67		10/18	10-20-67
	E	VD7							

PRIORITY: C
DRAWING TITLE: SUPT INSTL D/S - L.H BEAM PANEL (-Y)
DRAWING NO.: LDW280-52525
EO NO.: C4

CDR-10-27-67
ISSUED BY DON RAGAS X1153 SECTION VD1 GROUP NO. 335 PL 25

01
NAS 9-1100

ENG 32.1 REV 3-65

GRUMMAN AIRCRAFT ENGINEERING CORP.
CODE IDENT NO. 26512
ENGINEERING ORDER

DWG. NO. LDW280-52525 | EO NO. C5
CONTROL INFO NO. LM-5-17238

THIS EO IS A REVISION OF EO C4
ON -5 IN FLD/DWG:

-Z 27.00(REF) S/B +Z 27.00(REF)

RELEASED BY LIAISON

DETAIL SPEC REQ		CL II ENGRG CHG		CL I ENGRG CHG	✓ LCD 1294	5

REASON FOR EO: INCORRECT N/A CALLOUT FOR F.I.T.H. SUPPORTS (COORD...ATE REF CORRECTION)

DESCRIPTION OF EO: ON-5 IN FLD/DWG REF EO C4 +Z 27.00(REF) WAS: -Z 27.00(REF)

GAEC EO RELEASE: JK 33 / 025

MODEL	EFFECTIVITY PROCURING ACTIVITY NO.	GAEC UNIT NO.	SUB CONTR UNIT NO.
LM		LM-3 (33)	

DRAWING CHANGE REQD		DISPOSITION OF PARTS										
REVISE DWG	RECORD EO	REWORK	SCRAP			SUPPORT	RELIAB. GROUP	GROUP LEADER	STRESS GROUP	LIAISON ENGRG	PROJ ENGRG	~~GOVT~~
✓		✓		APPROVED BY	JaP			—	DY	CH	JaP	
				DATE	11/1/67			—	11/4	11-3-67	11/1/67	11-4-67
				11-2-67	VDI							

PRIORITY	DRAWING TITLE	DRAWING NO.	EO NO.
C	SUPPORT INSTL D/S-L.H BEAM PANEL (-Y)	LDW280-52525	C5

ISSUED BY LIAISON, P. HUSTED, 86755 SECTION V.D.I. GROUP NO. 335 PL 25

01

NAS 9-1100

GRUMMAN AIRCRAFT ENGINEERING CORP.
CODE IDENT NO. 26512
ENGINEERING ORDER

ENG 32.1 REV 3-65

DWG NO. LEO 280
EO NO. 1186
CONTROL INFO NO. LDW280 B5969

ON THE FOLLOWING INSTALLATION DRAWINGS
LDW280M17136-5-1 REPLACES LDW280M17136-5, EFF LM-3(33) THRU LM-15(45)
N/A AND QUANTITIES TO REMAIN THE SAME.

DWG. NO *	DASH NO	EFFECTIVITY	CHANGE LETTER
LDW280-23527	-9	LM-3(33) LFM282	F2 ✓
LDW280-52524	-5	LM-3(33) LFM282	C7
LDW280-52525	-5	LM-3(33) LFM282	C6
LDW280-52526	-5	LM-3(33) LFM282	C5
LDW280-54524	-5, -21, -25, -29	LM-4(34) LFM282, LM-5(35) THRU LM-15(45)	G2
LDW280-54525	-5, -21, -25, -29	LM-4(34) LFM282, LM-5(35) THRU LM-15(45)	G3
LDW280-54526	-5, -21, -25, -29	LM-4(34) LFM282, LM-5(35) THRU LM-15(45)	G10
LDW280-54527	-5, -21, -25, -29	LM-4(34) LFM282, LM-5(35) THRU LM-15(45)	F7

LFM

(5)

DETAIL SPEC REQ ☐ CL II ENGRG CHG ☐ CL I ENGRG CHG ☑ LCD 3537 PKG 1

REASON FOR EO: TO PROVIDE MULTIPOINT GROUNDING OF EXPLOSIVE DISCHARGE SHIELDS

DESCRIPTION OF EO: ON * LDW280M17136-5-1 REPLACED LDW280M17136-5

GAEC EO RELEASE: 10/24/68

MODEL	PROCURING ACTIVITY NO.	GAEC UNIT NO.	SUB CONTR UNIT NO.
LM		NOTED ABOVE	

DRAWING CHANGE REQD: REVISE DWG ✓ RECORD EO
DISPOSITION OF PARTS: REWORK ✓ SCRAP

	VDI	SUPPORT	RELIAB. GROUP	GROUP LEADER	STRESS GROUP	LIAISON ENGRG	PROJ ENGRG	GOVT
APPROVED BY								
DATE	10/23/68			10/23/68	10/23/68		10/23/68	10-24-68

PRIORITY: C
DRAWING TITLE: SEE DWG
DRAWING NO.: LEO280
EO NO.: 1186

CDR 102468
ISSUED BY J.CLARK/P.THORJUSEN x86046 SECTION VDI GROUP NO. 335 PL 25

01

NAS 9-1100

ENG 32.1 REV 3-65

GRUMMAN AIRCRAFT ENGINEERING CORP.
CODE IDENT NO. 26512
ENGINEERING ORDER

DWG. NO. LEO 280
EO NO. 1264
CONTROL INFO NO. LDW 280 B 6622

THIS LEO WITH EO#(**) CANCELS EO#(*)

DRAWING #	DASH#	TITLE	EFFECTIVITY	EO#(*)	EO#(**)
LDW280-23527	-9	SEE DRAWING	LM-3(33) LFM282	F2 ✓	F3
LDW280-52525	-5		LM-3(33) LFM282	C6 ✓	C7
LDW 280-52526	-5		LM-3(33) LFM282	C5	C6
LDW 280-54524	-5,-21,-25,-29		LM-4(34) THRU LM-15(45) LFM282	G2	G4
LDW 280-54525	-5,-21,-25,-29	SEE DRAWING		G3	G6

LFM

DETAIL SPEC REQ ☐ CL II ENGRG CHG ☐ CL I ENGRG CHG ✓ LCD 3537 PKG1

(5)

REASON FOR EO: LCD 3537 A CANCELLED PER LAV-10-504

DESCRIPTION OF EO: LEO WITH EO#(**) CANCELLED EO#(*)

GAEC EO RELEASE: YC 1/18/69

MODEL	EFFECTIVITY PROCURING ACTIVITY NO.	GAEC UNIT NO.	SUB CONTR UNIT NO.
LM		NOTED ABOVE	

DRAWING CHANGE REQD: ✓ REVISE DWG / RECORD EO

DISPOSITION OF PARTS: REWORK / ✓ SCRAP

	VDI	SUPPORT	RELIAB. GROUP	GROUP LEADER	STRESS GROUP	LIAISON ENGRG	PROJ ENGRG	GOVT
APPROVED BY	JAS			G.H. PJX				Bauman
DATE	1/4/69			1/3/69	1/4/		1/4/69	1/18/69

PRIORITY: C

DRAWING TITLE: SEE DRAWING

DRAWING NO.: LEO 280

EO NO.: 1264

12-23-68 ISSUED BY W. FOLTERMAN / P. THORJUSEN X86046 SECTION VDI GROUP NO. 335 PL 25

01 NAS 9-1100

			-7	-5	-3	-1	CODE IDENT	PART NO.	I&T	NOMENCLATURE OR DESCRIPTION	MATERIAL	GOVT SPEC	COML SPEC	STOCK SIZE	PROCESS SYM	FINISH NO.	ZONE
			1		1			LDW280-17624-14	E	STIFFENER	SEE DWG						4F
			1		1			-13									3B
			1		1			-12									4F
			1		1			LDW280-17624-11									4A
			1		1			LDW280-17620-16									10F
			1		1			LDW280-17620-15		STIFFENER							2E
			2		2			LDW280-17614-18		PLATE							10A
			2		2			LDW280-17614-17									9A
			4		4			LDW280-17613-15									3A
			4		4			LDW280-17613-13									3A
			4		4			LDW280-17613-11		PLATE							3A
			2		2			LDW280-17341-21		DOUBLER							4C
			2		2			LDW280-17151-11		DOUBLER							4E
				1		1		LDW280-17150-12		CLIP							4C
				1		1		LDW280-17150-11		CLIP							4C
				1		1		LDW280-17149-3		ZEE							[illegible]
			1		1			LDW280-17145-12		STIFFENER							[illegible]
			1		1			LDW280-17145-11		STIFFENER							7C
			1		1			LDW280-17126-23		WEB	SEE DWG						[illegible]
				1				LDW280-52526-7		BULKHEAD ASSY					NONE	NONE	6A
								-5		BULKHEAD INSTL					NONE	NONE	6A
						1		-3		BULKHEAD ASSY					NONE	NONE	6A
								LDW280-52526-1	E	BULKHEAD INSTL					NONE	NONE	6A
			QTY PER ASSEMBLY														

SYM OR NO.	PROCESS OR FINISH	GRUMMAN SPEC OR MILITARY SPEC	SYM OR NO.	PROCESS OR FINISH	GRUMMAN SPEC OR MILITARY SPEC	SYM OR NO.	PROCESS OR FINISH	GRUMMAN SPEC OR MILITARY SPEC
						F6	ANODIZE	LSP14-9030

I & T: IDENTIFICATION AND TRACEABILITY IN ACCORDANCE WITH :
NONE

GRUMMAN AIRCRAFT ENGRG CORP, BETHPAGE, L. I., NEW YORK

SIZE	CODE IDENT NO.		
B	26512	LDW280-52526	A
SCALE NONE			SHEET 2.00

ENG 77.2 7-65

01

NAS 9-1100

			-7	-5	-3	-1	CODE IDENT	PART NO.	I&T	NOMENCLATURE OR DESCRIPTION	MATERIAL	GOVT SPEC	COML SPEC	STOCK SIZE	PROCESS SYM	FINISH NO.	ZONE
QTY PER ASSEMBLY																	
								NAS1097DD5	E	RIVET	STD PART						
								MS20470DD6									
								MS20470DD5									
								MS20470DD4									
								MS20470AD4		RIVET	STD PART						
			4		4			GR501A-4H		RIVET	GRUMMAN STD						
			1		1			GR500A-4E		RIVET							
			4		4			GR500A-4D		RIVET							
			4		4			GN512H-6		COLLAR							
			20	4	20	4		GN512H-4		COLLAR							
			16		16			GN512H-3		COLLAR							
			2		2			G120-170-5-11A		SHIM	GRUMMAN STD						
			AS REQ		AS REQ					SHIM	SEE NOTE 1						
			2		2			LDW280M17470-3		FITTING	SEE DWG						3A
			1		1			LDW280M17418-1		CAPSTRIP							[illegible]
			1		1			LDW280M17402-7		CORNER POST							[illegible]
			1		1			LDW280M17402-5		CORNER POST							[illegible]
			1		1			LDW280M17325-2		FITTING							5F
			1		1			LDW280M17325-1		FITTING							4A
			1		1			LDW280M17230-8		CHANNEL							5E
			1		1			LDW280M17230-7		CHANNEL							4A
			2		2			LDW280M17141-3	E	FITTING	SEE DWG						5A 5F

SYM OR NO.	PROCESS OR FINISH	GRUMMAN SPEC OR MILITARY SPEC	SYM OR NO.	PROCESS OR FINISH	GRUMMAN SPEC OR MILITARY SPEC	SYM OR NO.	PROCESS OR FINISH	GRUMMAN SPEC OR MILITARY SPEC

I & T: IDENTIFICATION AND TRACEABILITY IN ACCORDANCE WITH :
NONE

GRUMMAN AIRCRAFT ENGRG CORP, BETHPAGE, L. I., NEW YORK

SIZE	CODE IDENT NO.		
B	26512	LDW280-52526	A

SCALE NONE

SHEET 2 OF 2

ENG 77.2 7-65

01

NAS 9-1100

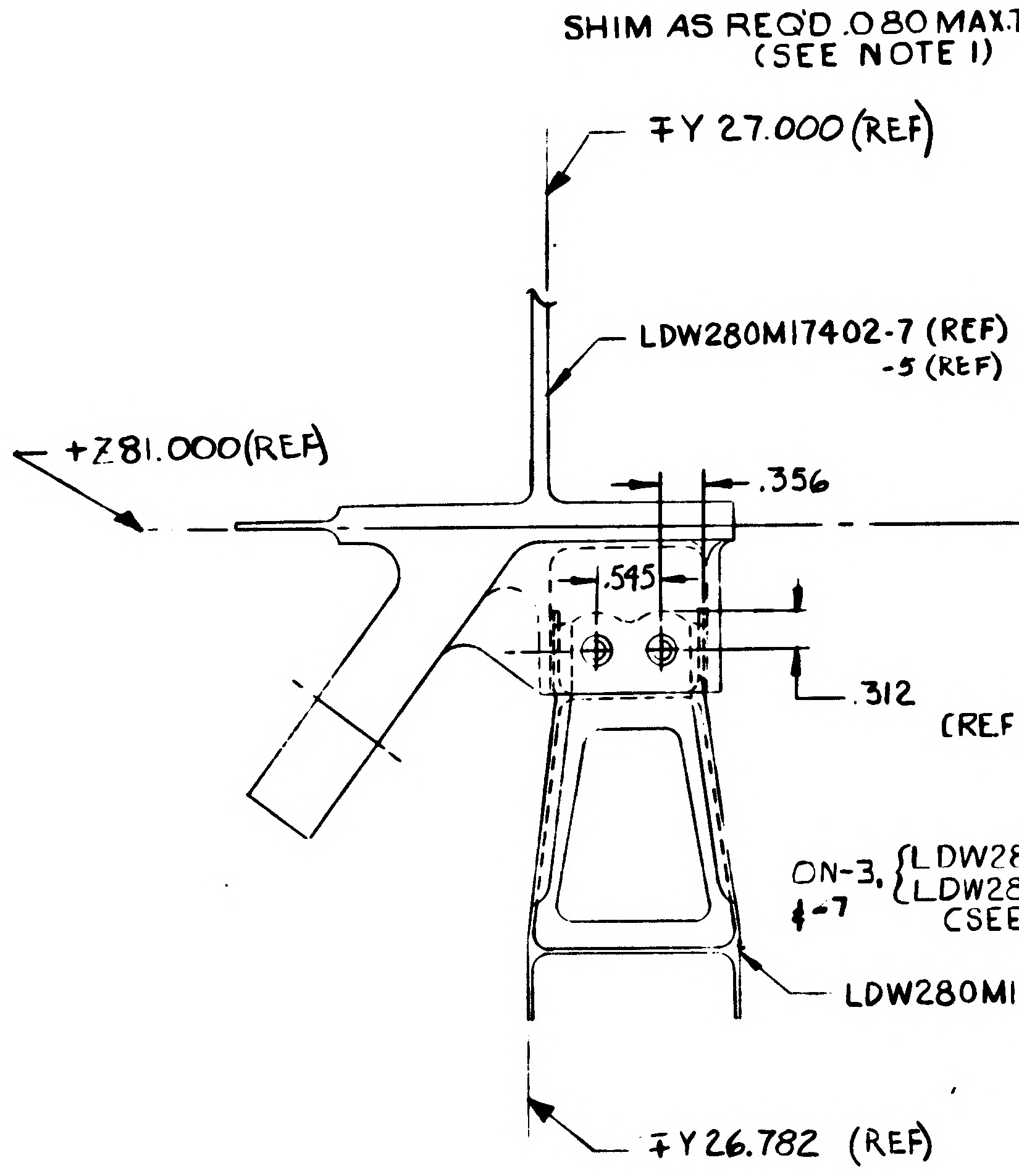
∓Y 27.000 (REF)
LDW280M17402-7 (REF)
-5 (REF)
+Z81.000(REF)
.356
.545
.312
LDW280M17470-3 (REF)
∓Y26.782 (REF)

SECTION Z-Z
(ZONE 9J SH 5)

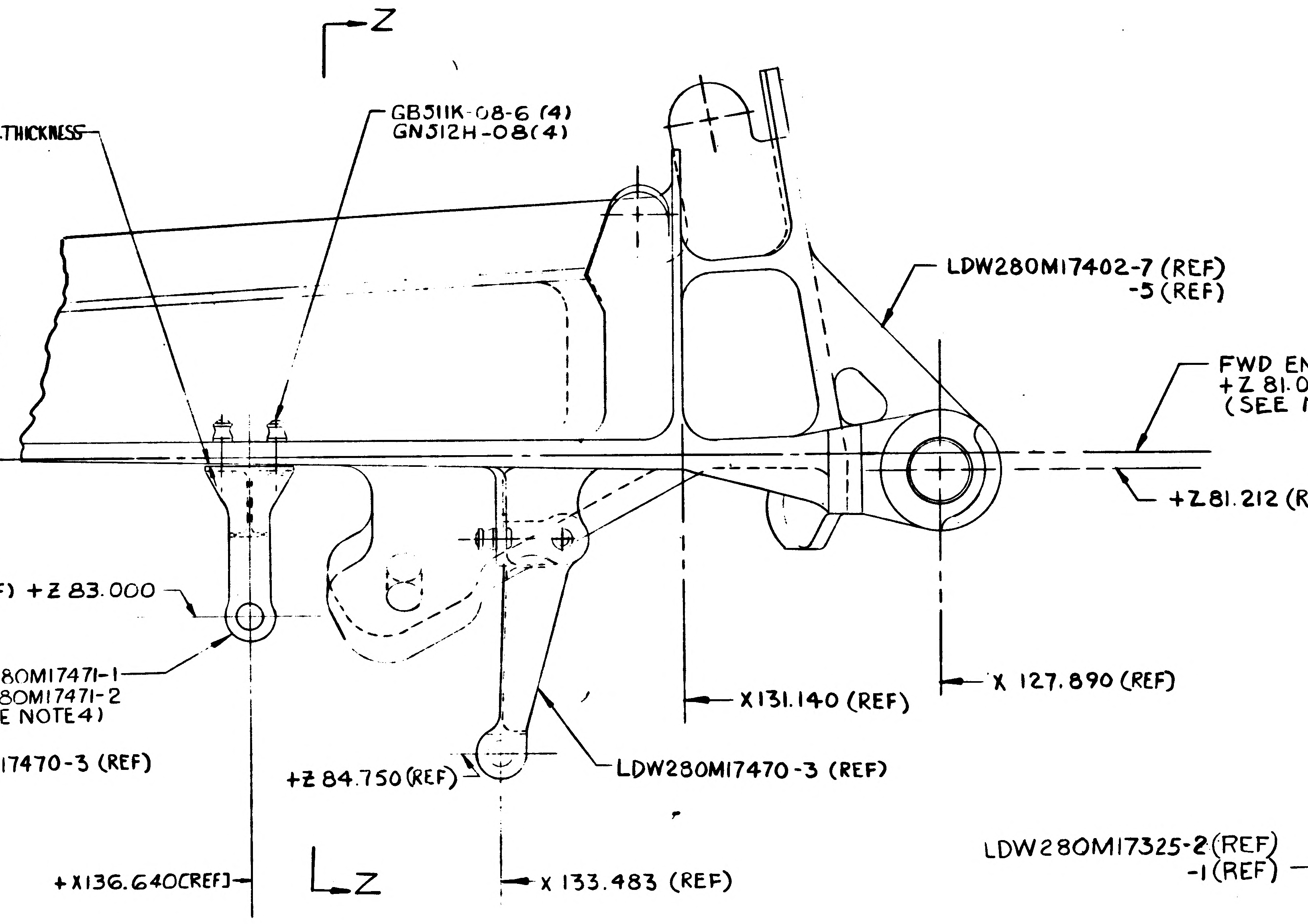
Z
SHIM AS REQ'D .080 MAX.THICKNESS
(SEE NOTE 1)
GB511K-08-6 (4)
GN512H-08(4)
LDW280M17402-7 (REF)
-5 (REF)
FWD END BULKHEAD REF PLANE
+Z 81.000 (REF)
(SEE NOTE 4)
+Z81.212 (REF)
(REF) +Z 83.000
ON-3, LDW280M17471-1
&-7 LDW280M17471-2
(SEE NOTE4)
X131.140 (REF)
X 127.890 (REF)
+Z 84.750 (REF)
LDW280M17470-3 (REF)
+X136.640(REF)
Z
X 133.483 (REF)

VIEW B-B (SHOWN)
(ZONE 3F SH 4

VIEW C-C (OPP)
(ZONE 3A SH 3

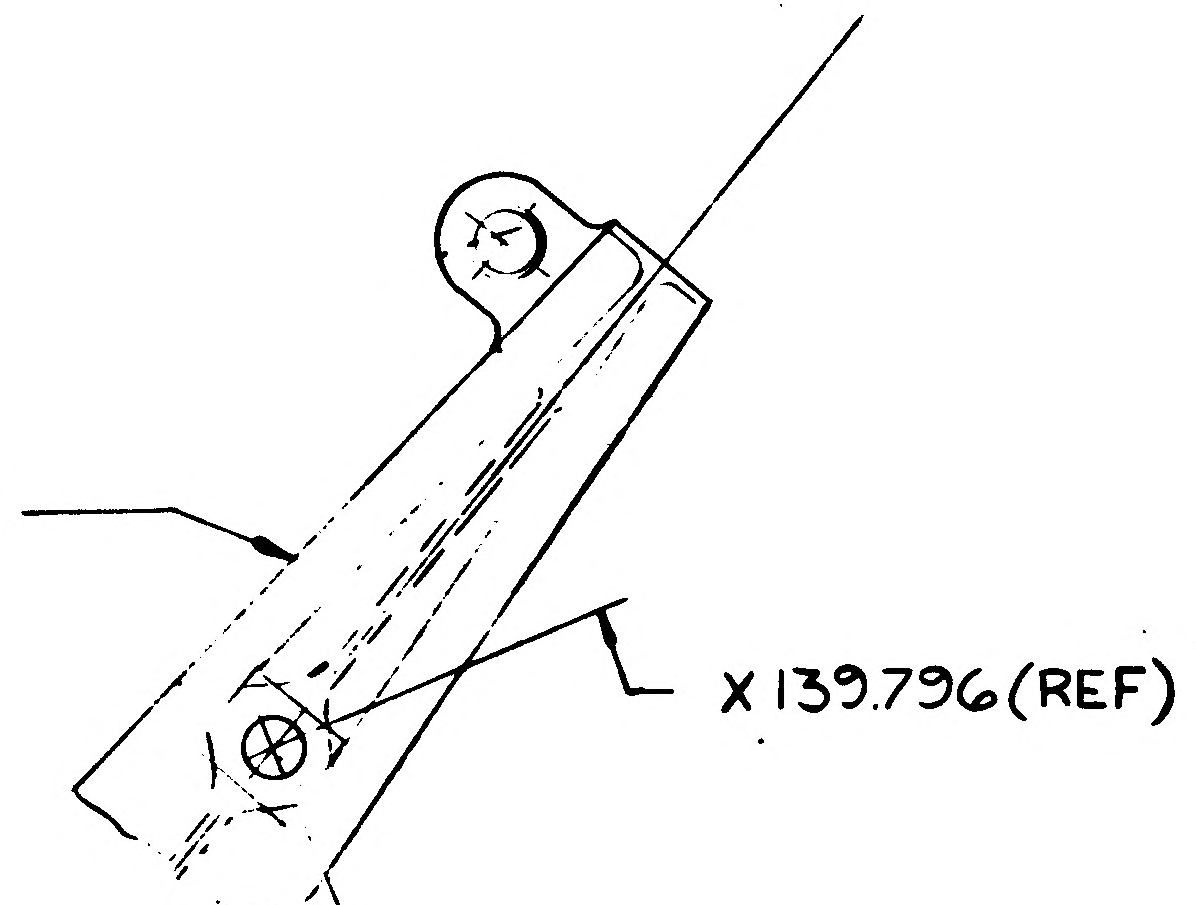
LDW280M17325-2(REF)
-1(REF)
X 139.796 (REF)

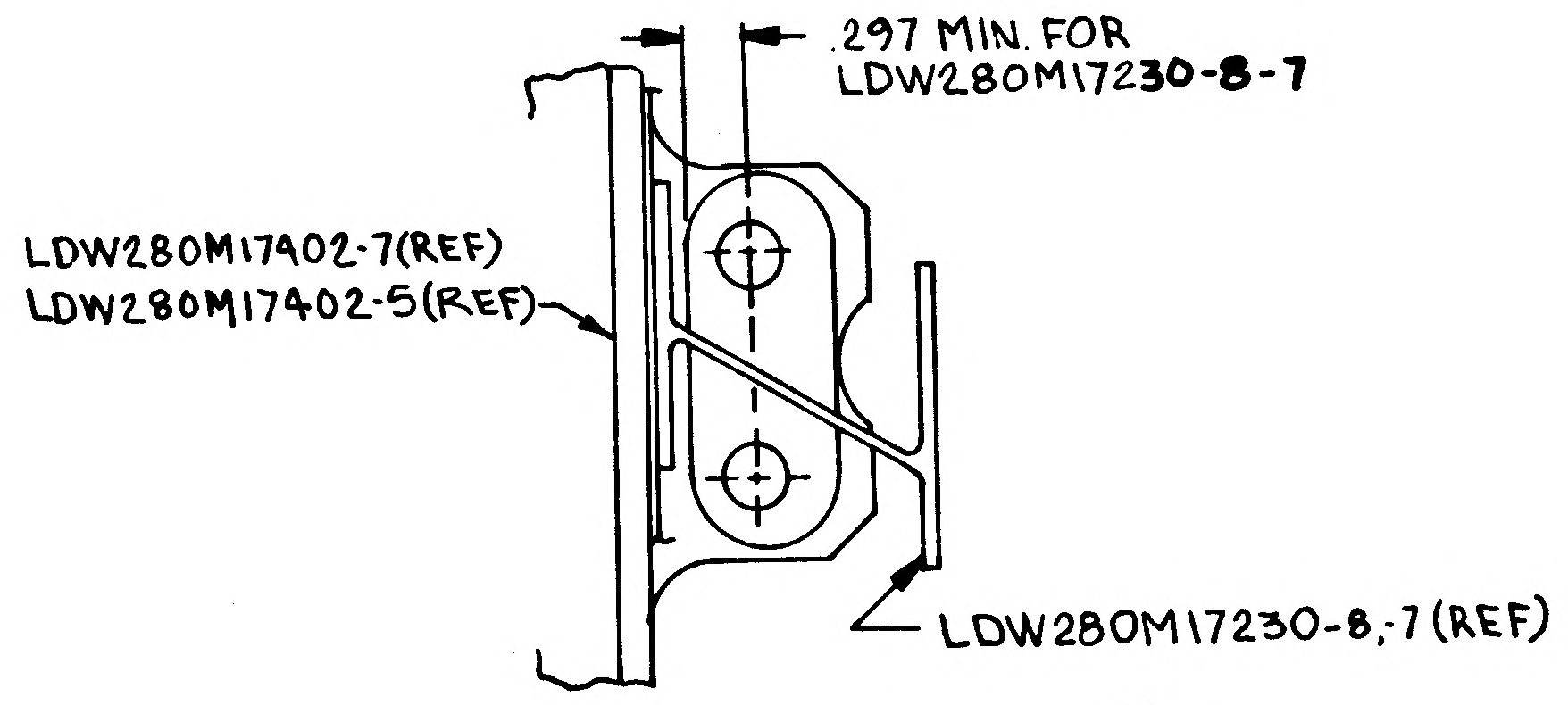
.297 MIN. FOR
LDW280M17230-8-7
LDW280M17402-7(REF)
LDW280M17402-5(REF)
LDW280M17230-8,-7 (REF)

SECTION AA-AA (A5)
(ZONE 8G)

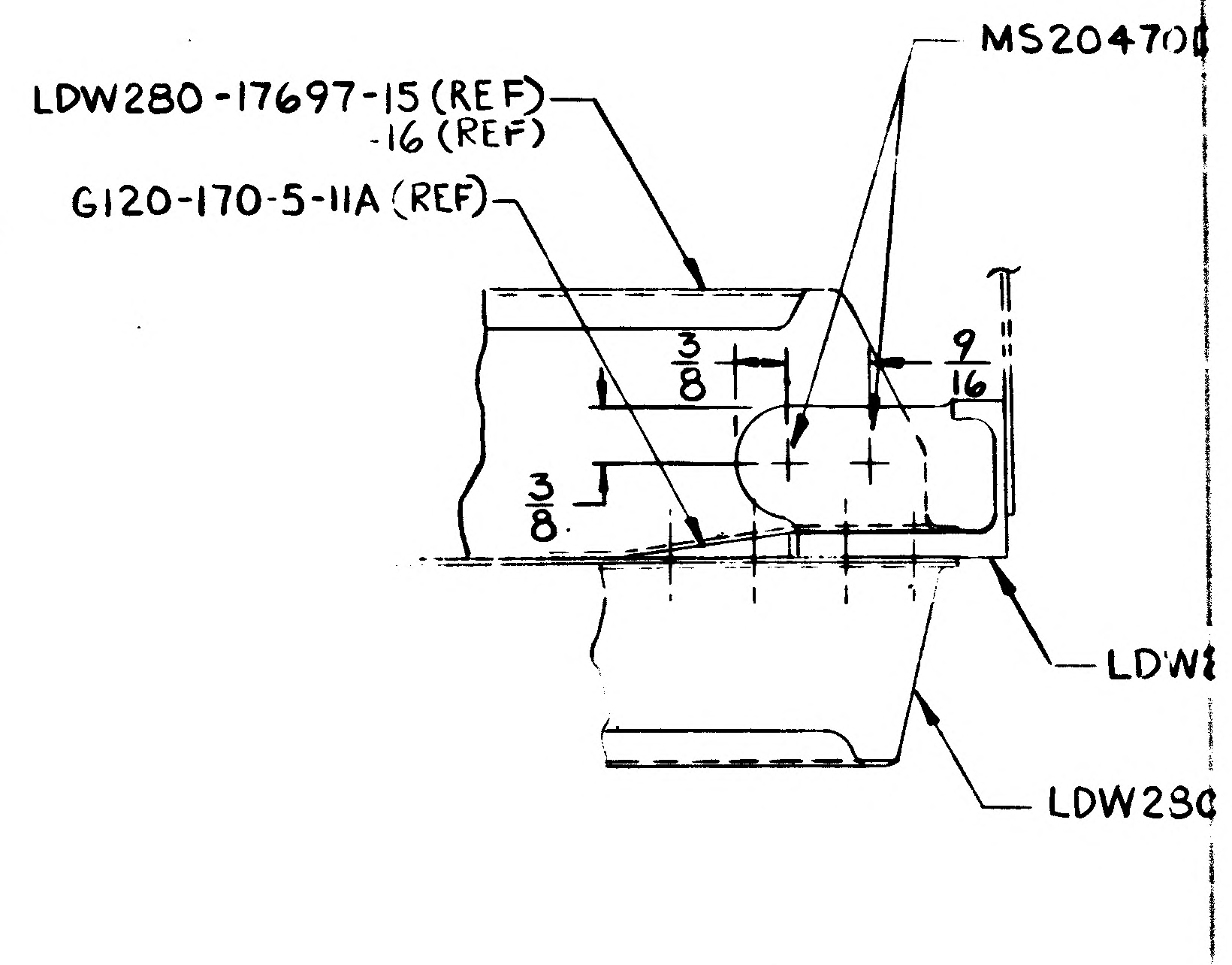
LDW280-17697-15 (REF)
-16 (REF)
G120-170-5-11A (REF)
MS20470
3/8
9/16
3/8
LDW
LDW280

SECTION F-F (SHOWN)
(ZONE 3B SH3)

SECTION G-G (OPP)
(ZONE 3E SH4

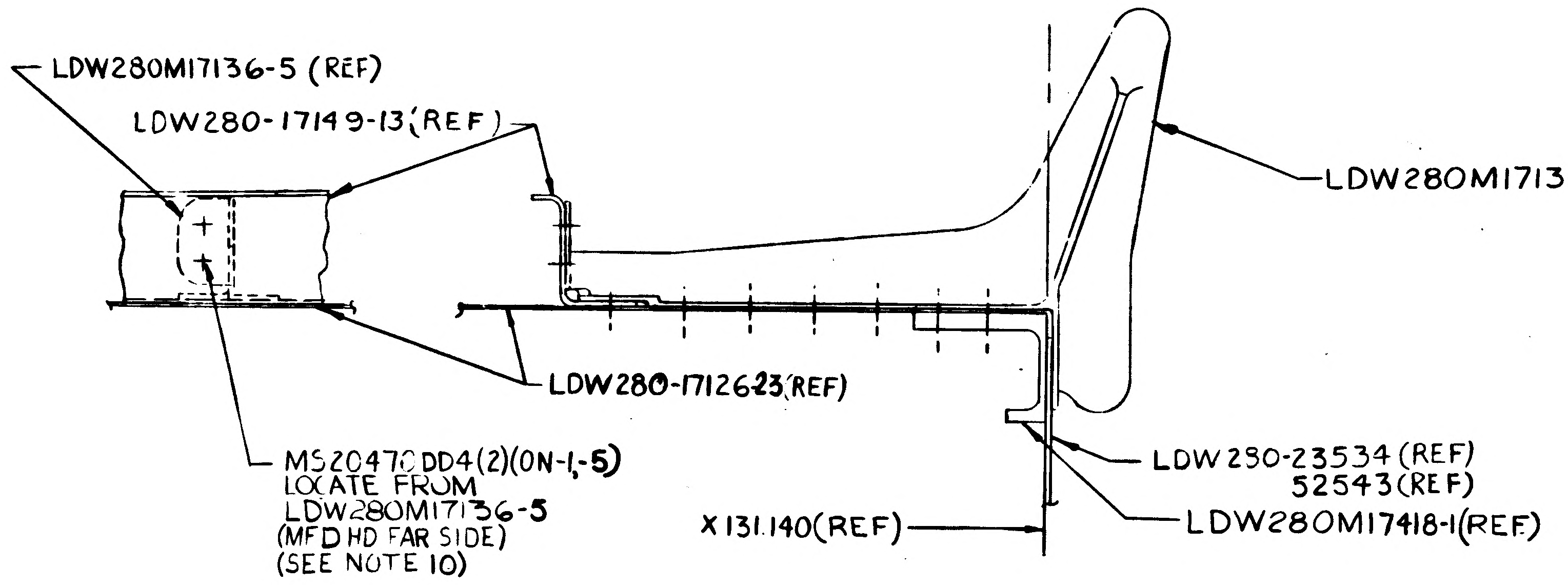
LDW280M17136-5 (REF)
LDW280-17149-13 (REF)
LDW280M17136-5 (REF)
LDW280-1712623 (REF)
MS20470DD4(2)(ON-1,-5)
LOCATE FROM
LDW280M17136-5
(MFD HD FAR SIDE)
(SEE NOTE 10)
X131.140(REF)
LDW280-23534 (REF)
52543(REF)
LDW280M17418-1(REF)

SECTION A-A
(ZONE 3C SH 3

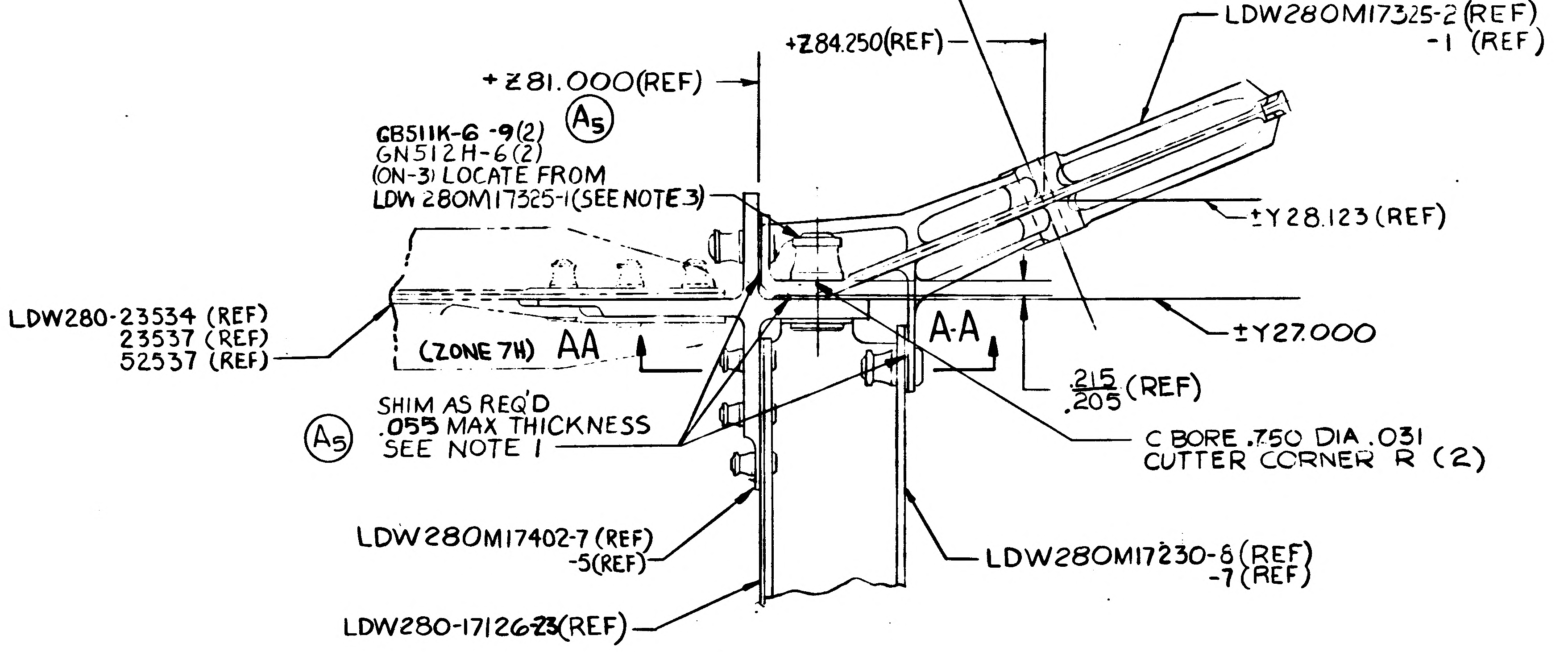
+Z81.000(REF)
+Z84.250(REF)
LDW280M17325-2 (REF)
-1 (REF)
(A5)
GB511K-6 -9(2)
GN512H-6(2)
(ON-3) LOCATE FROM
LDW 280M17325-1(SEE NOTE 3)
±Y28.123 (REF)
LDW280-23534 (REF)
23537 (REF)
52537 (REF)
(ZONE 7H) AA
A-A
±Y27.000
.215
.205 (REF)
SHIM AS REQ'D
.055 MAX THICKNESS
SEE NOTE 1
(A5)
C BORE .750 DIA .031
CUTTER CORNER R (2)
LDW280M17402-7 (REF)
-5(REF)
LDW280M17230-8 (REF)
-7 (REF)
LDW280-1712623(REF)

SECTION H-H (SHOWN)
(ZONE 5F SH. 4

SECTION J-J (OPP)
(ZONE 4A SH 3

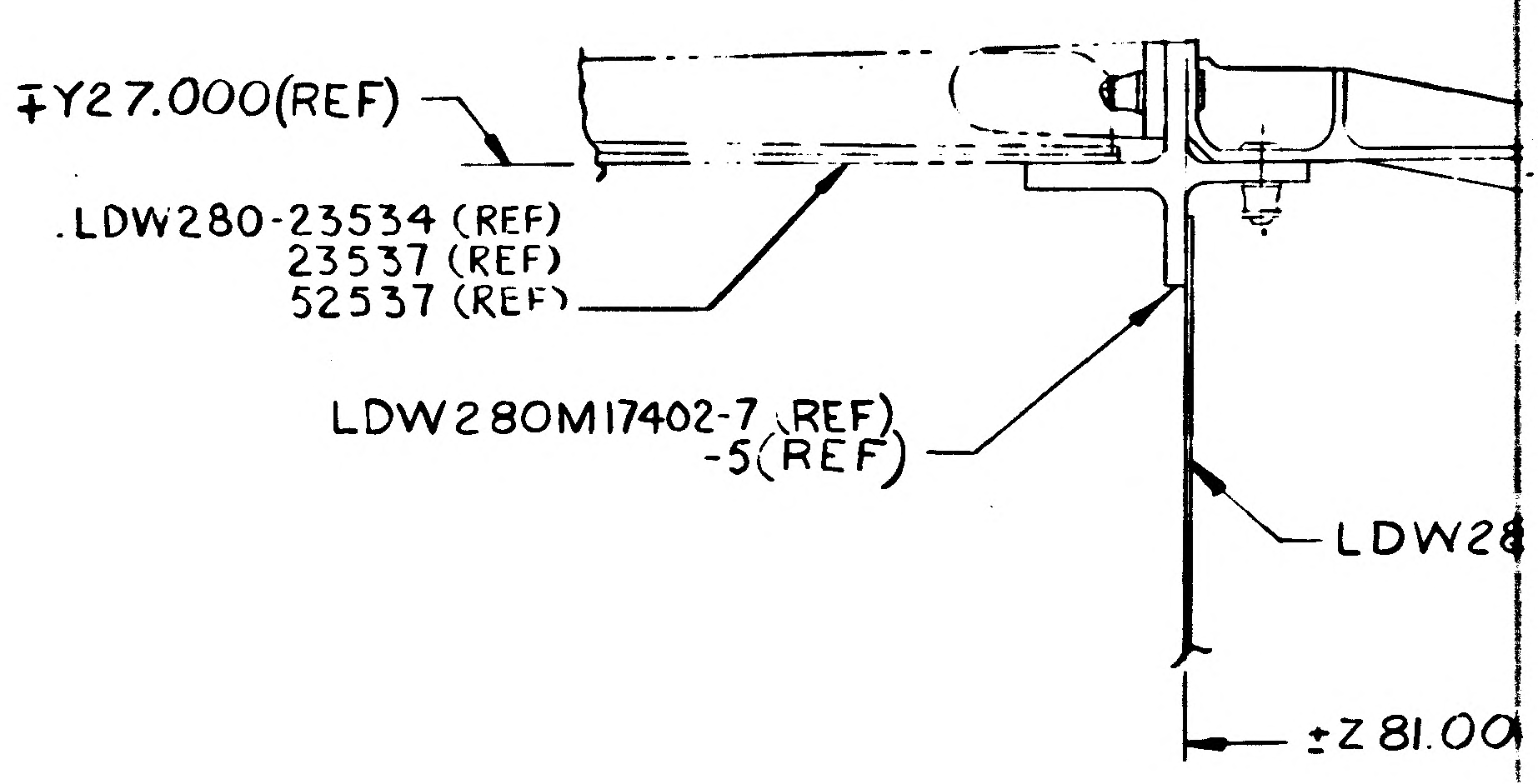
∓Y27.000(REF)
LDW280-23534 (REF)
23537 (REF)
52537 (REF)
LDW280M17402-7 (REF)
-5(REF)
LDW28
+Z81.00

SECTION D-D (SH
(ZONE 5F SH 4

SECTION E-E (OP
(ZONE 5A SH 3

01/03 NAS 9-1100

CODE IDENT NO.26512

LDW280-52526 SH 5

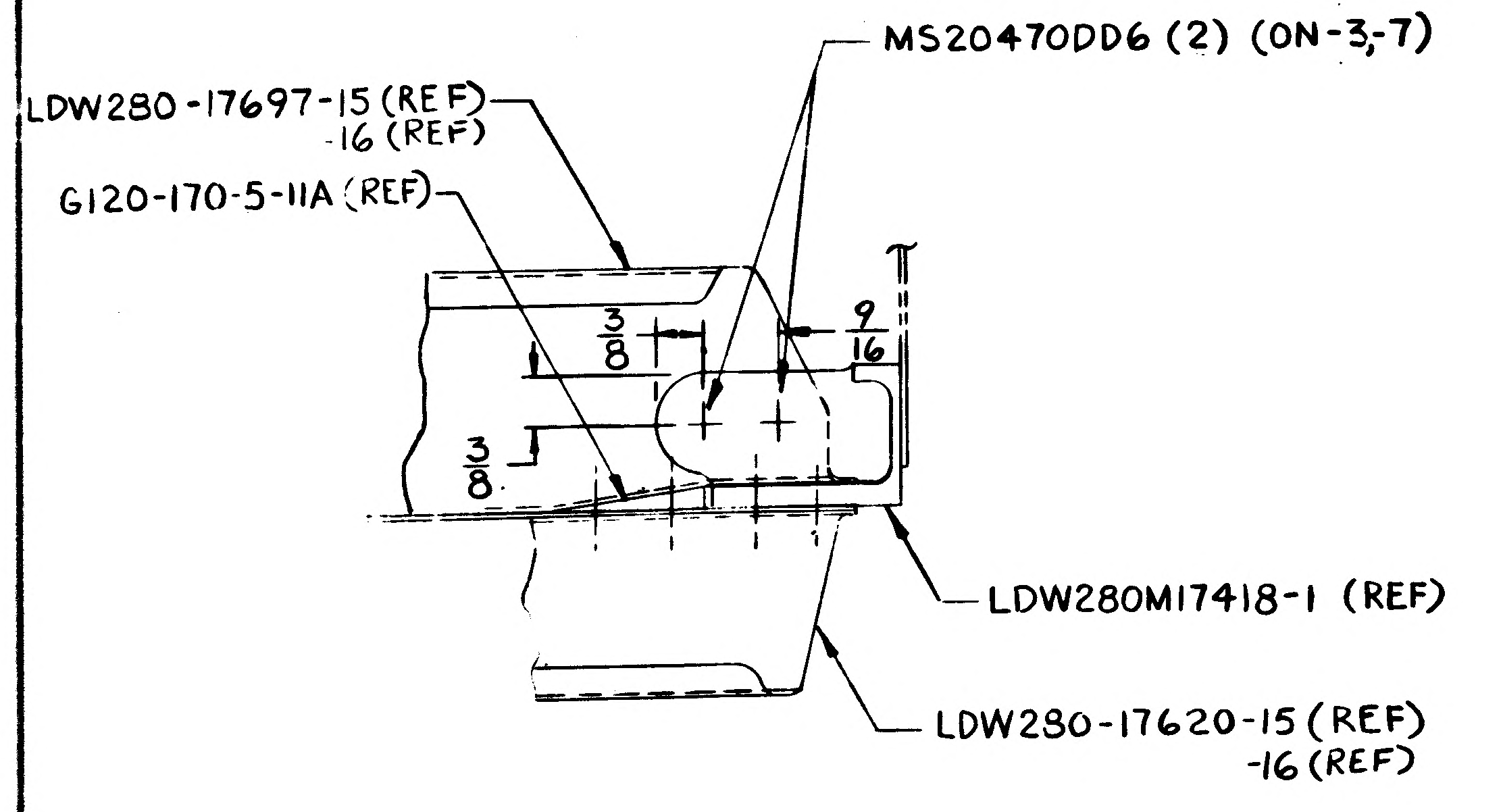
MS20470DD6 (2) (ON-3,-7)
LDW280-17697-15 (REF)
-16 (REF)
G120-170-5-11A (REF)
3/8
9/16
3/8
LDW280M17418-1 (REF)
LDW280-17620-15 (REF)
-16 (REF)

SECTION F-F (SHOWN)
(ZONE 3B SH3)
SECTION G-G (OPP)
(ZONE 3E SH4

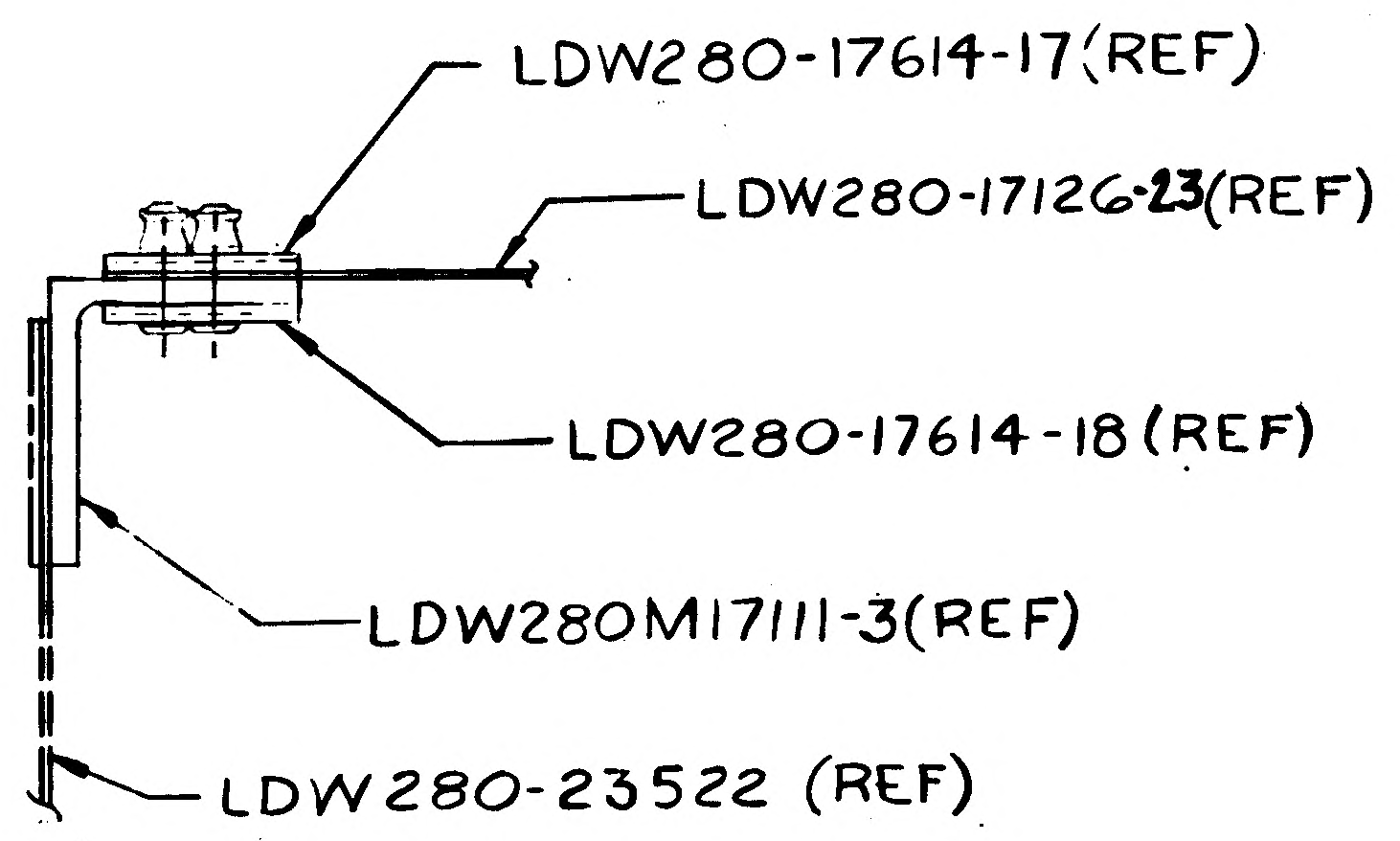
LDW280-17614-17 (REF)
LDW280-17126-23 (REF)
LDW280-17614-18 (REF)
LDW280M17111-3 (REF)
LDW280-23522 (REF)

SECTION M-M (SHOWN)
(ZONE 9A SH 3)
SECTION N-N (OPP)
(ZONE 10F SH 4

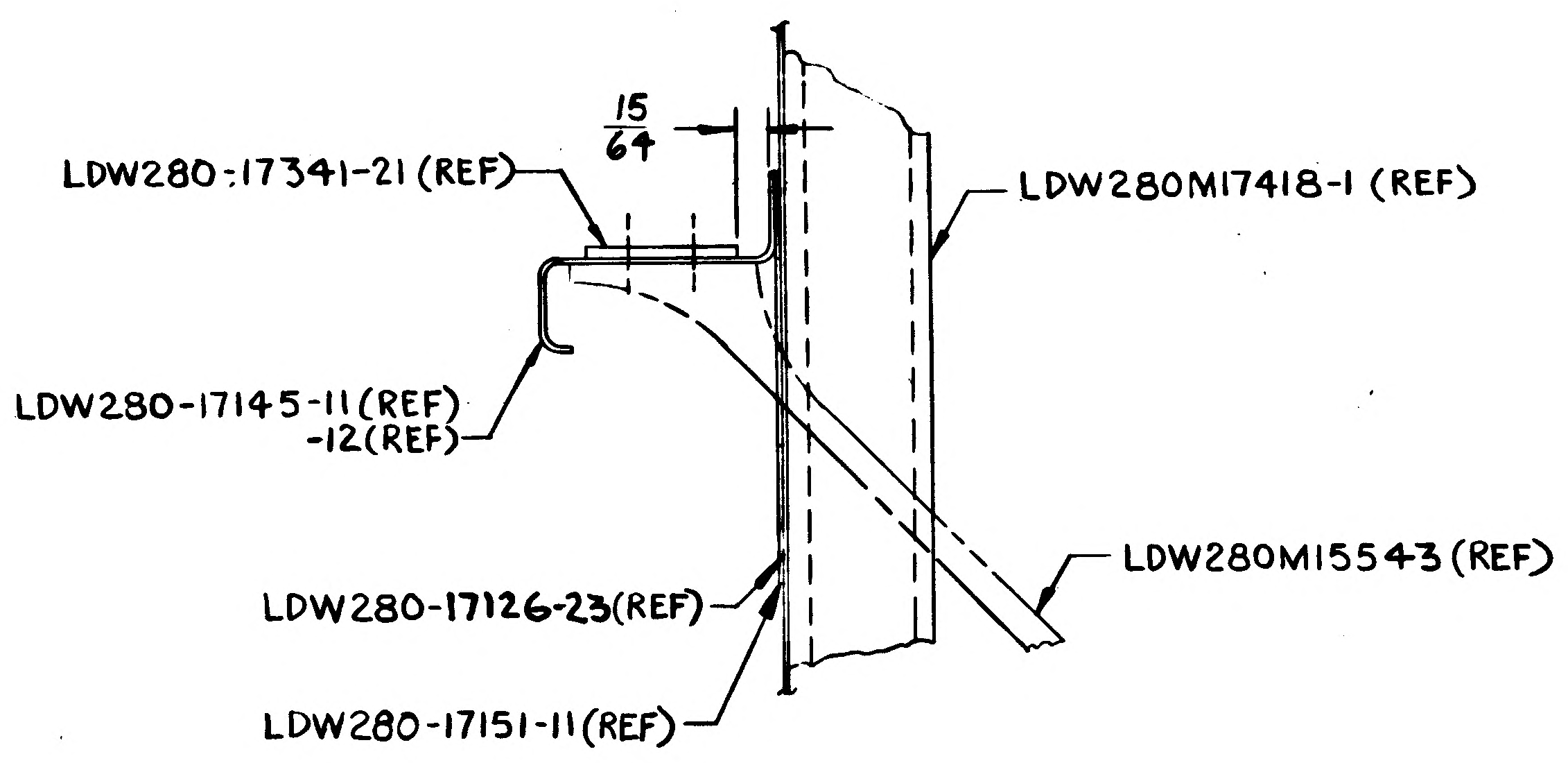
15/64
LDW280-17341-21 (REF)
LDW280M17418-1 (REF)
LDW280-17145-11 (REF)
-12 (REF)
LDW280M15543 (REF)
LDW280-17126-23 (REF)
LDW280-17151-11 (REF)

VIEW R-R (SHOWN)
(ZONE 3C SH3
VIEW S-S (OPP)
(ZONE 3F SH4

7

0-8,-7 (REF)

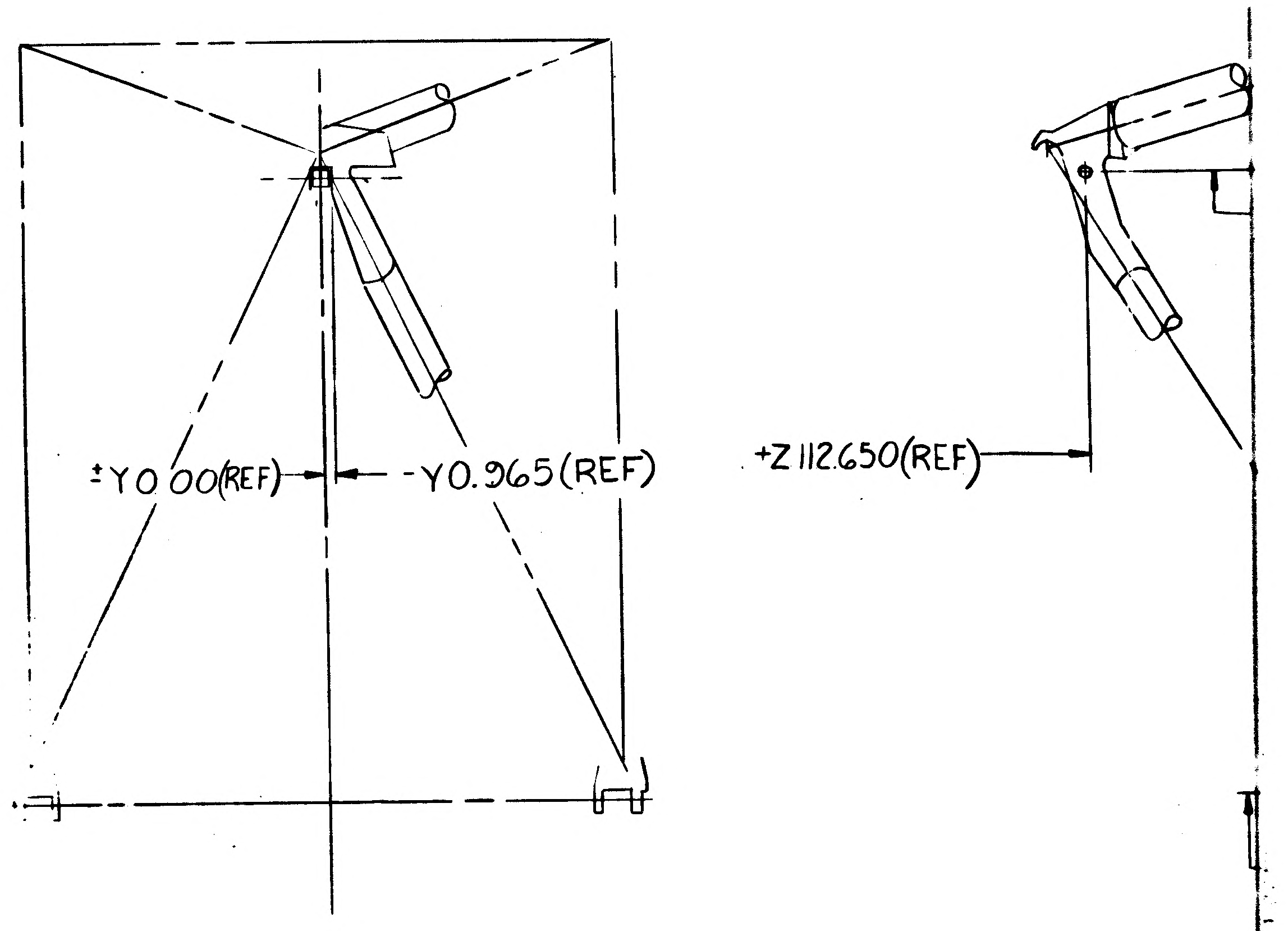
±Y0.00(REF)
-Y0.965(REF)
+Z112650(REF)

ENGR. INFO FOR OUTRIGGER ASSY
(SEE NOTE 4)
SCALE: NONE

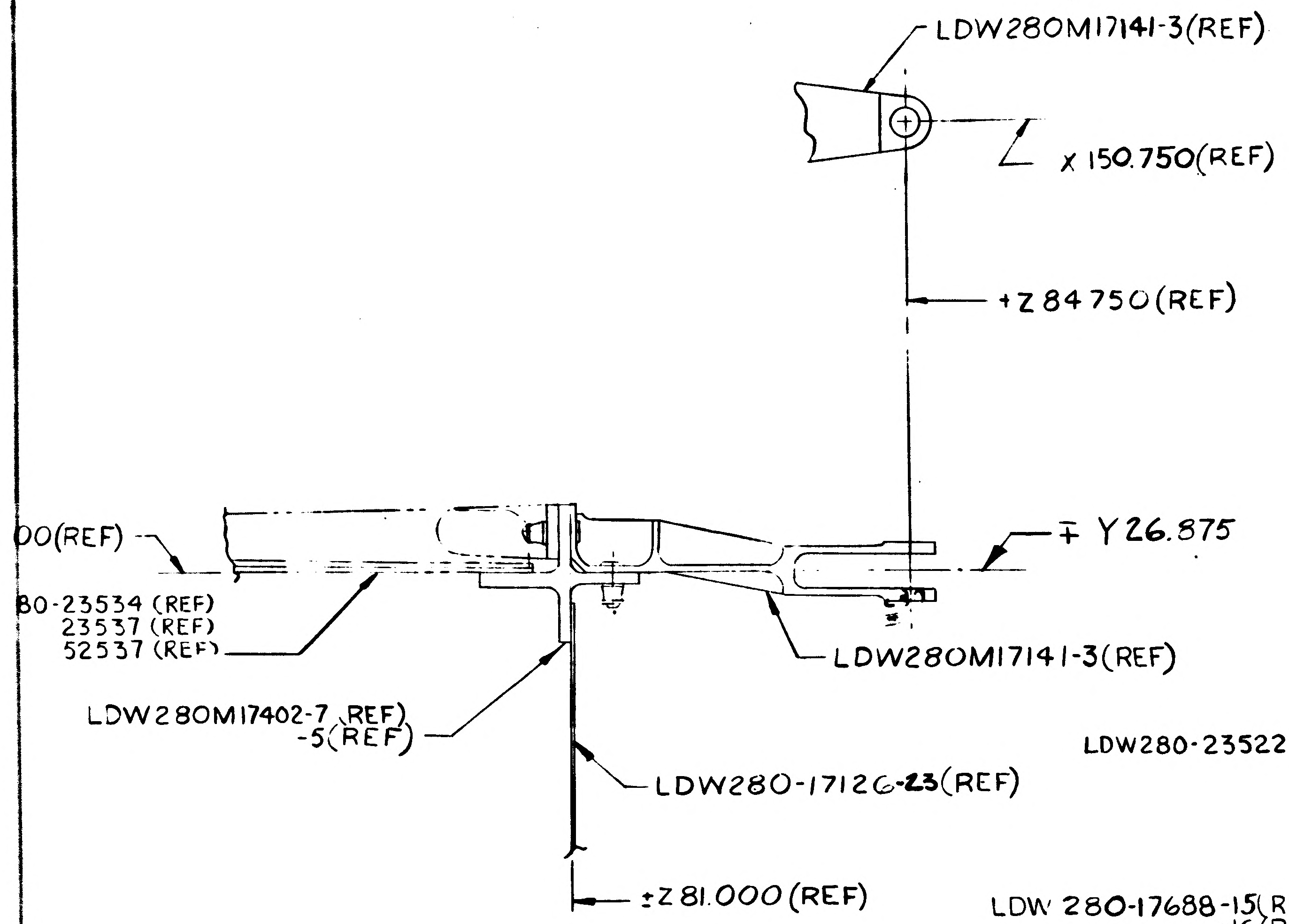
LDW280M17141-3 (REF)
X 150.750 (REF)
+Z 84.750 (REF)
00(REF)
∓ Y26.875
80-23534 (REF)
23537 (REF)
52537 (REF)
LDW280M17141-3 (REF)
LDW280M17402-7 (REF)
-5 (REF)
LDW280-17126-23 (REF)
±Z81.000 (REF)

SECTION D-D (SHOWN)
(ZONE 5F SH 4
SECTION E-E (OPP)
(ZONE 5A SH 3

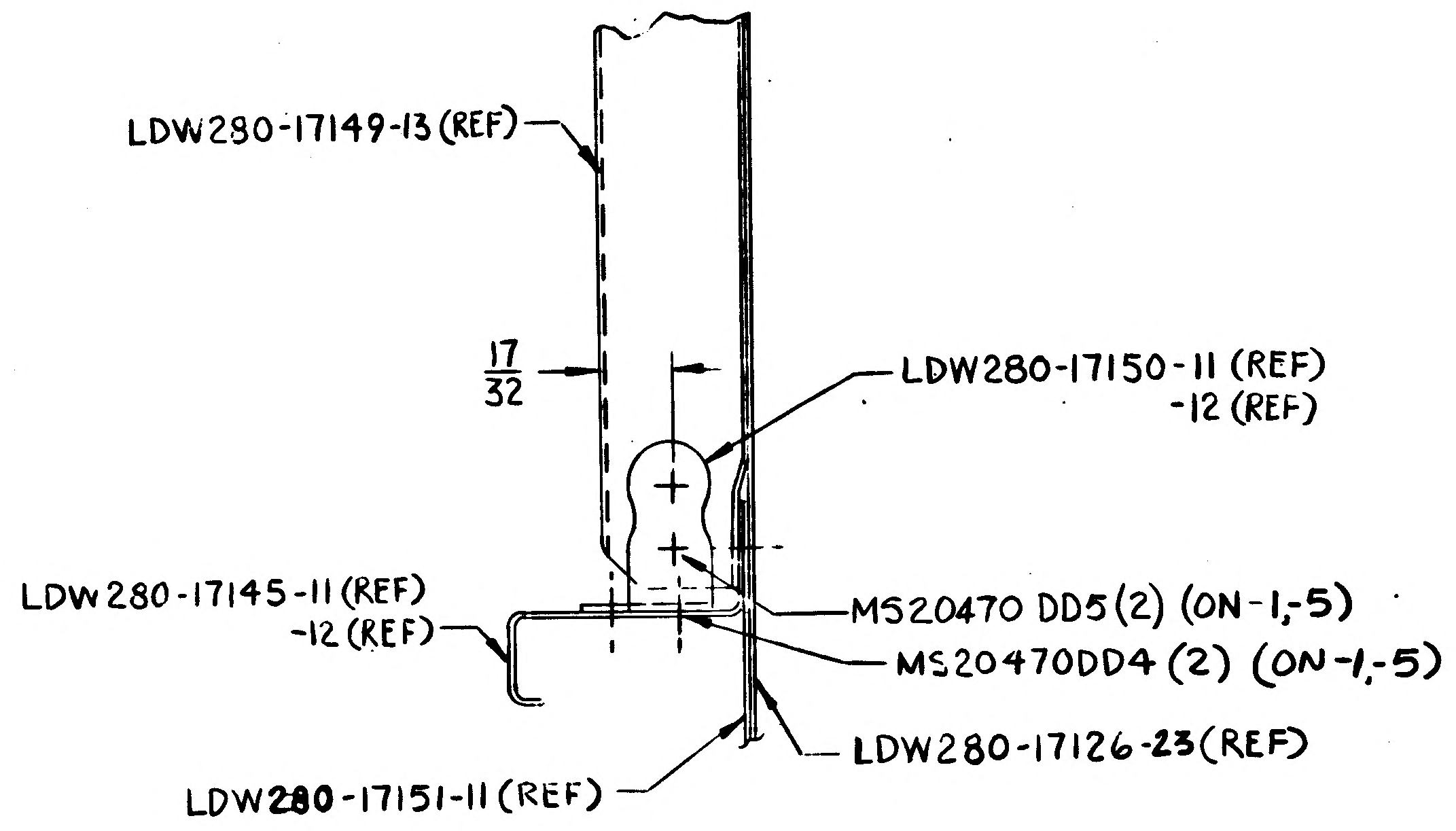
LDW280-17149-13 (REF)
17/32
LDW280-17150-11 (REF)
-12 (REF)
LDW280-17145-11 (REF)
-12 (REF)
MS20470DD5 (2) (ON-1,-5)
MS20470DD4 (2) (ON-1,-5)
LDW280-17126-23 (REF)
LDW280-17151-11 (REF)

SECTION P-P (SHOWN)
(ZONE 3C SH 3)
SECTION W-W (OPP)
(ZONE 4D SH4)

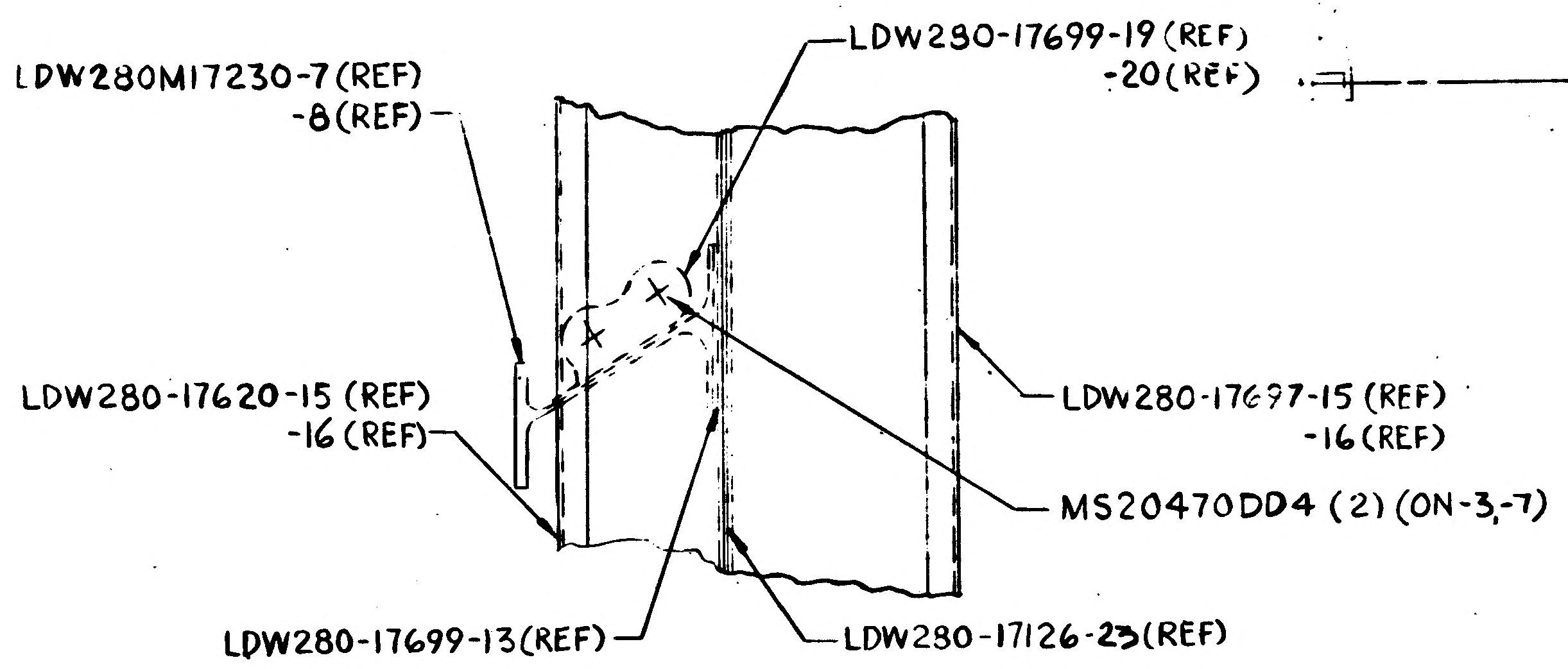
LDW280M17230-7 (REF)
-8 (REF)
LDW280-17699-19 (REF)
-20 (REF)
LDW280-17620-15 (REF)
-16 (REF)
LDW280-17697-15 (REF)
-16 (REF)
MS20470DD4 (2) (ON-3,-7)
LDW280-17699-13 (REF)
LDW280-17126-23 (REF)

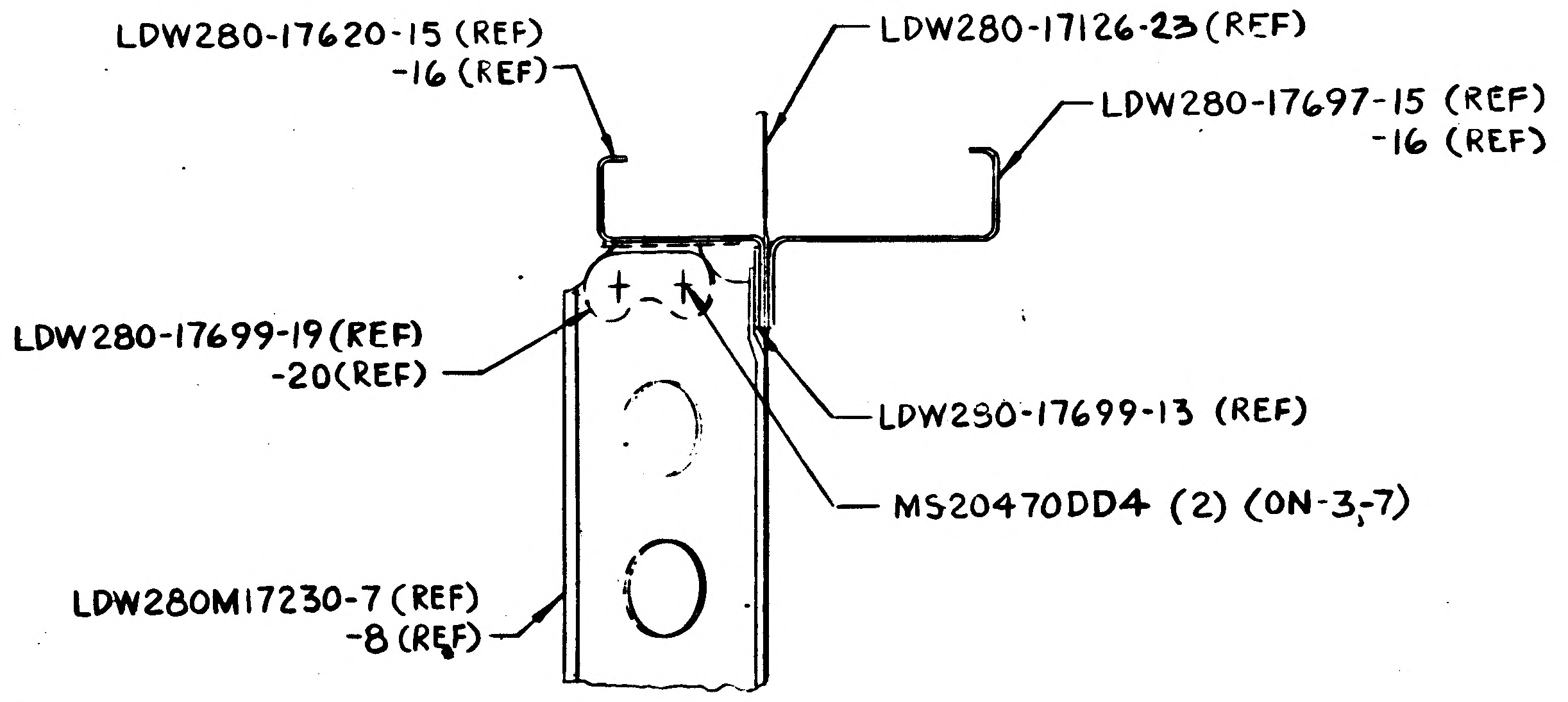
LDW280-17620-15 (REF)
-16 (REF)
LDW280-17126-23 (REF)
LDW280-17697-15 (REF)
-16 (REF)
LDW280-17699-19 (REF)
-20 (REF)
LDW280-17699-13 (REF)
MS20470DD4 (2) (ON-3,-7)
LDW280M17230-7 (REF)
-8 (REF)

SECTION K-K (SHOWN)
(ZONE 4B SH 3)
SECTION L-L (OPP)
(ZONE 4E SH4)

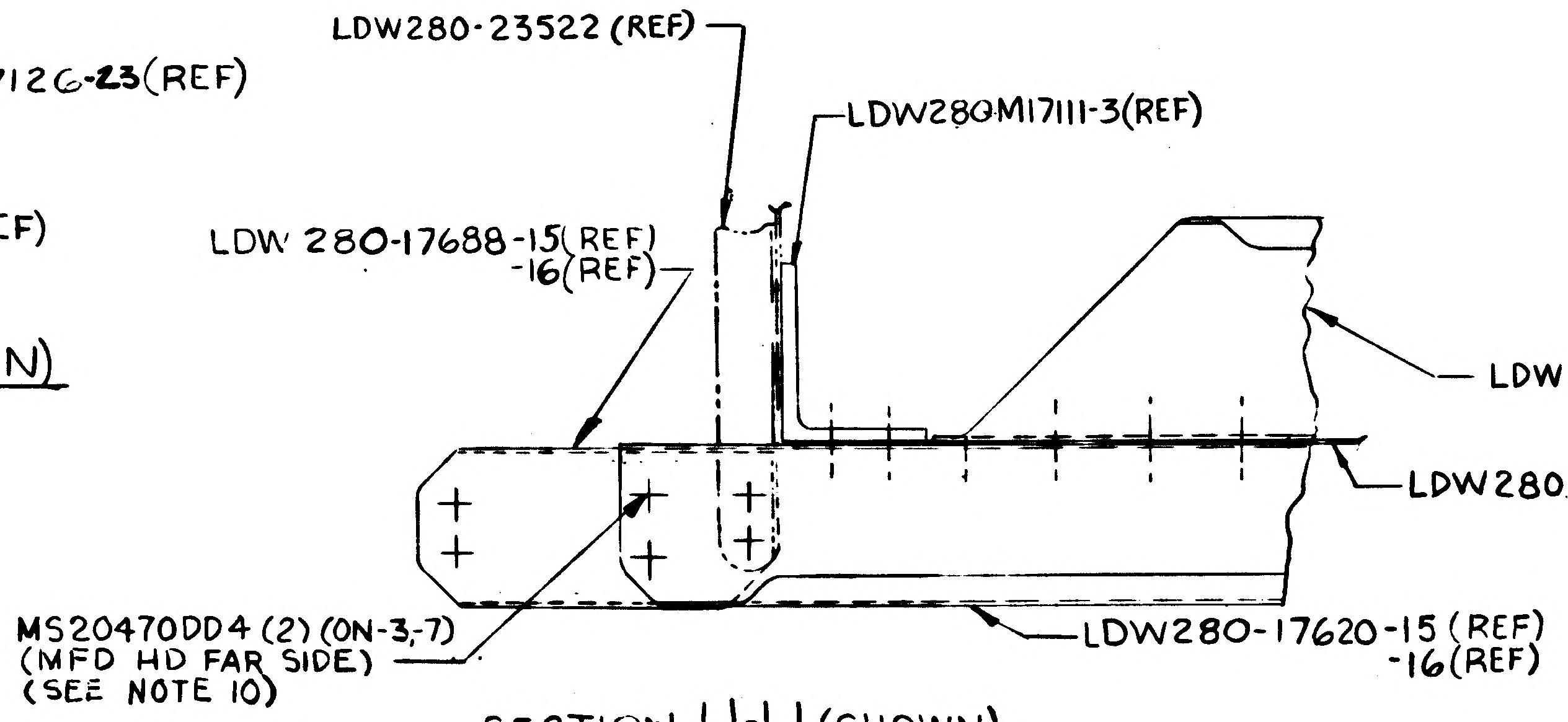
LDW280-23522 (REF)
LDW280M17111-3 (REF)
LDW 280-17688-15 (REF)
-16 (REF)
LDW280-17697-15 (REF)
-16 (REF)
LDW280-17126-23 (REF)
MS20470DD4 (2) (ON-3,-7)
(MFD HD FAR SIDE)
(SEE NOTE 10)
LDW280-17620-15 (REF)
-16 (REF)

SECTION U-U (SHOWN)
(ZONE 10B SH3)
SECTION V-V (OPP)
(ZONE 10E SH4)

Q2/03 NAS 9-1100

CODE IDENT NO. 26512
LDW280-52526 SH 5

CODE IDENT NO. 26512
LDW280-52526 SH 5

4 3 2 1

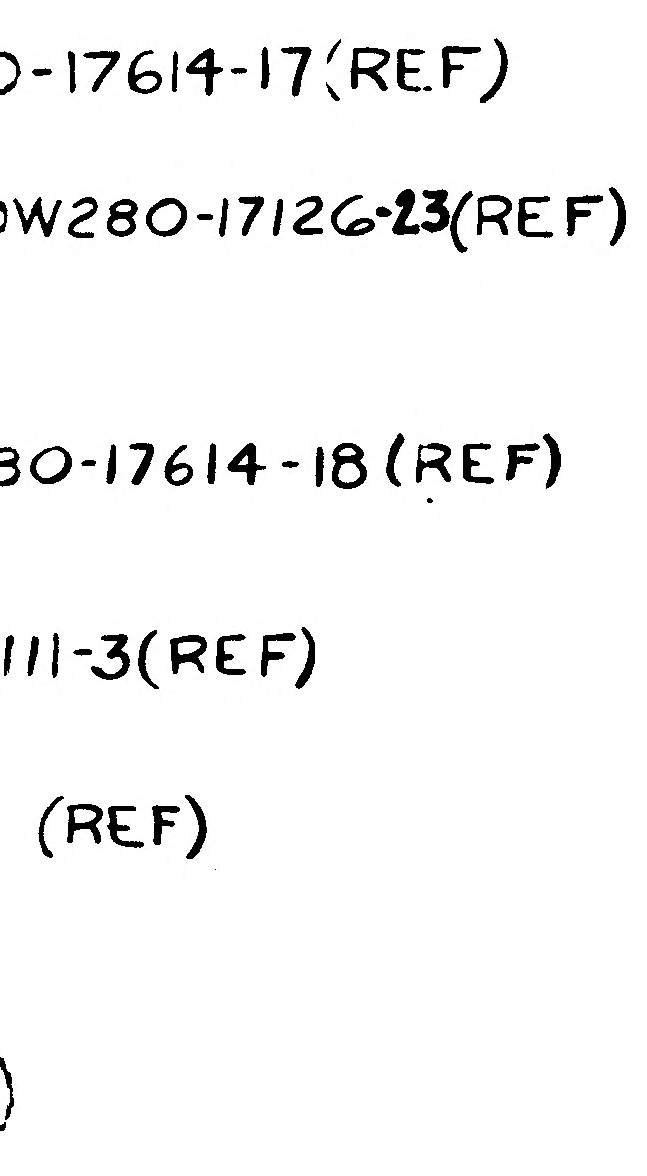
-17614-17(REF)
W280-17126-23(REF)
30-17614-18(REF)
111-3(REF)
(REF)

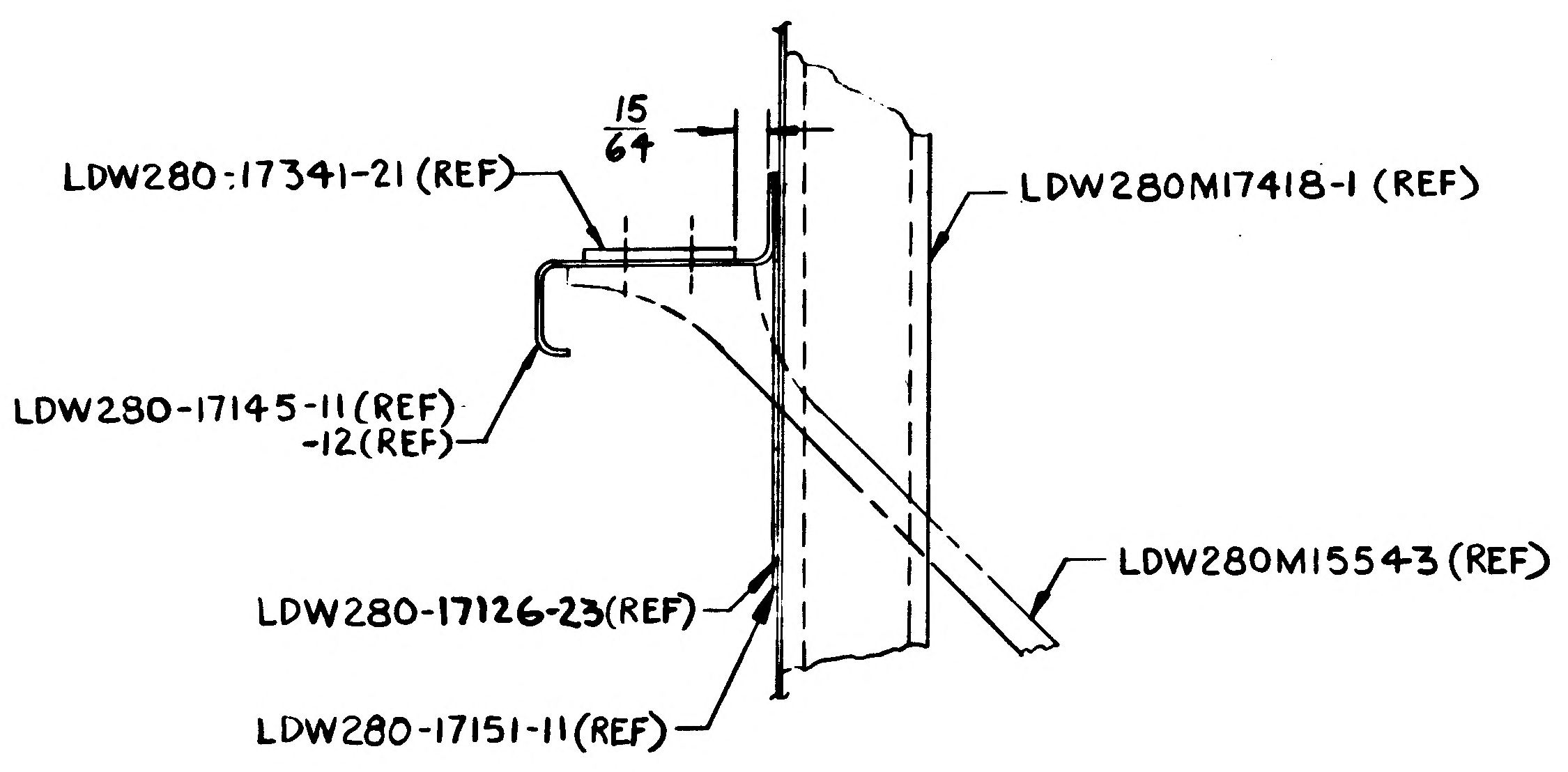
15/64
LDW280-17341-21 (REF)
LDW280M17418-1 (REF)
LDW280-17145-11(REF)
-12(REF)
LDW280M15543 (REF)
LDW280-17126-23(REF)
LDW280-17151-11(REF)

VIEW R-R (SHOWN)
(ZONE 3C SH3

VIEW S-S (OPP)
(ZONE 3F SH4

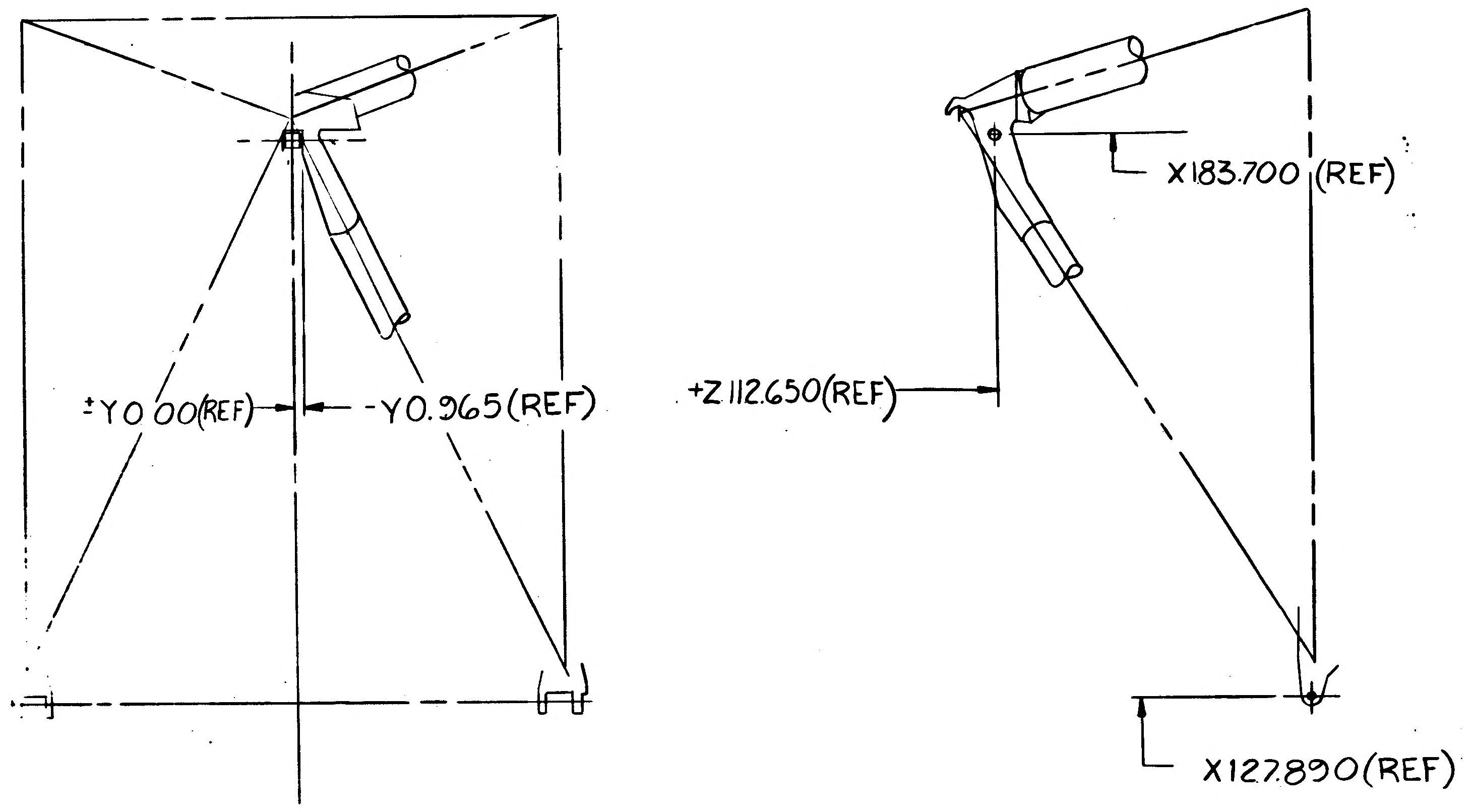
±Y0.00(REF)
-Y0.965(REF)
+Z112.650(REF)
X183.700 (REF)
X127.890(REF)

ENGR. INFO FOR OUTRIGGER ASSY
(SEE NOTE 4)
SCALE: NONE

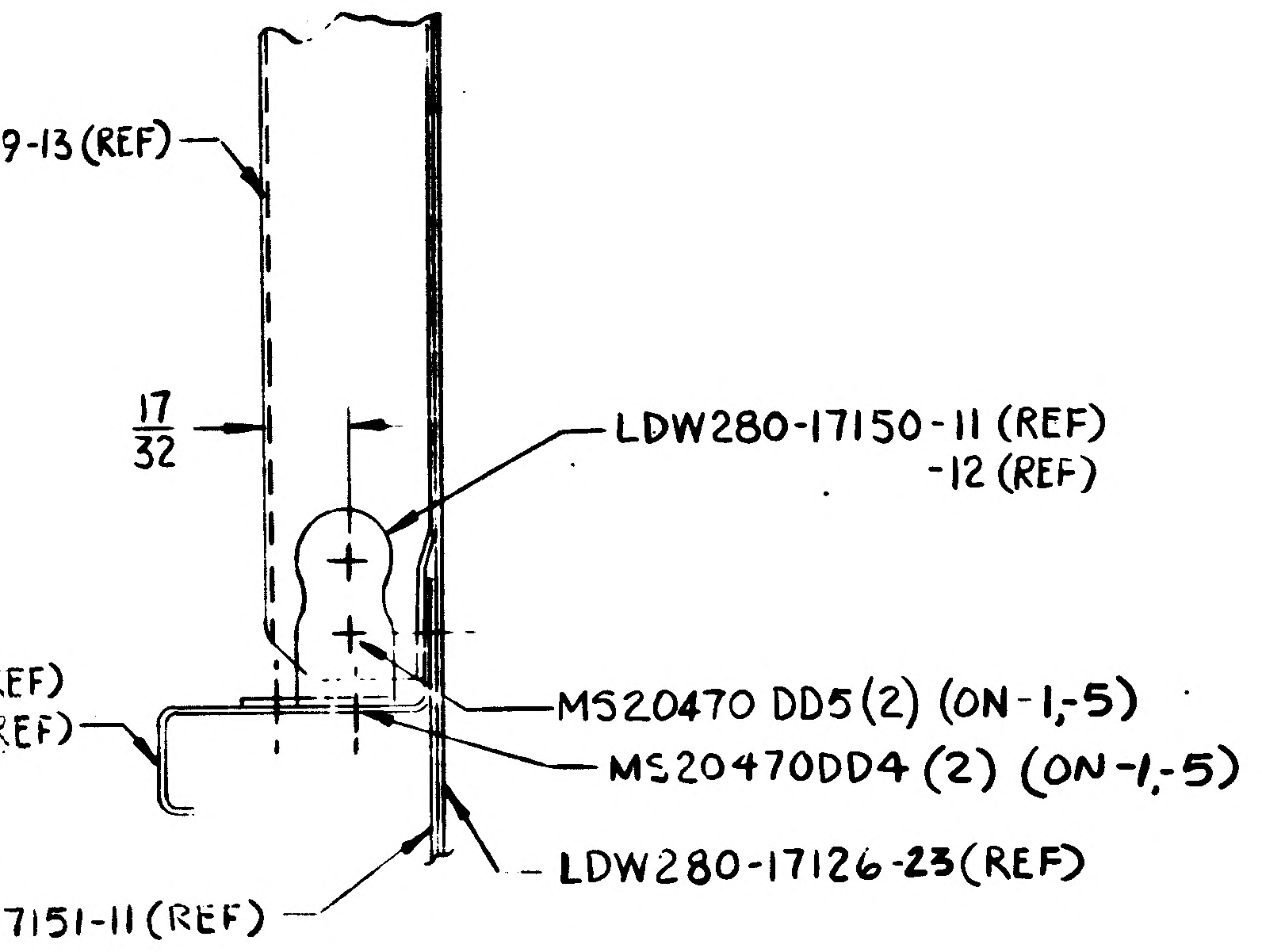
9-13 (REF)
17/32
LDW280-17150-11 (REF)
-12 (REF)
EF)
EF)
MS20470 DD5(2) (ON-1,-5)
MS20470DD4 (2) (ON-1,-5)
LDW280-17126-23(REF)
7151-11(REF)

SECTION P-P (SHOWN)
(ZONE 3C SH 3)

SECTION W-W (OPP)
(ZONE 4D SH4)

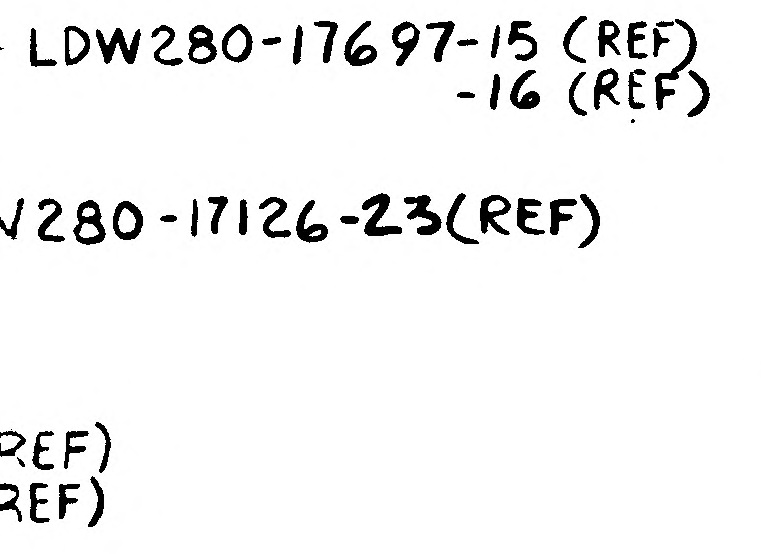
LDW280-17697-15 (REF)
-16 (REF)
V280-17126-23(REF)
REF)
REF)

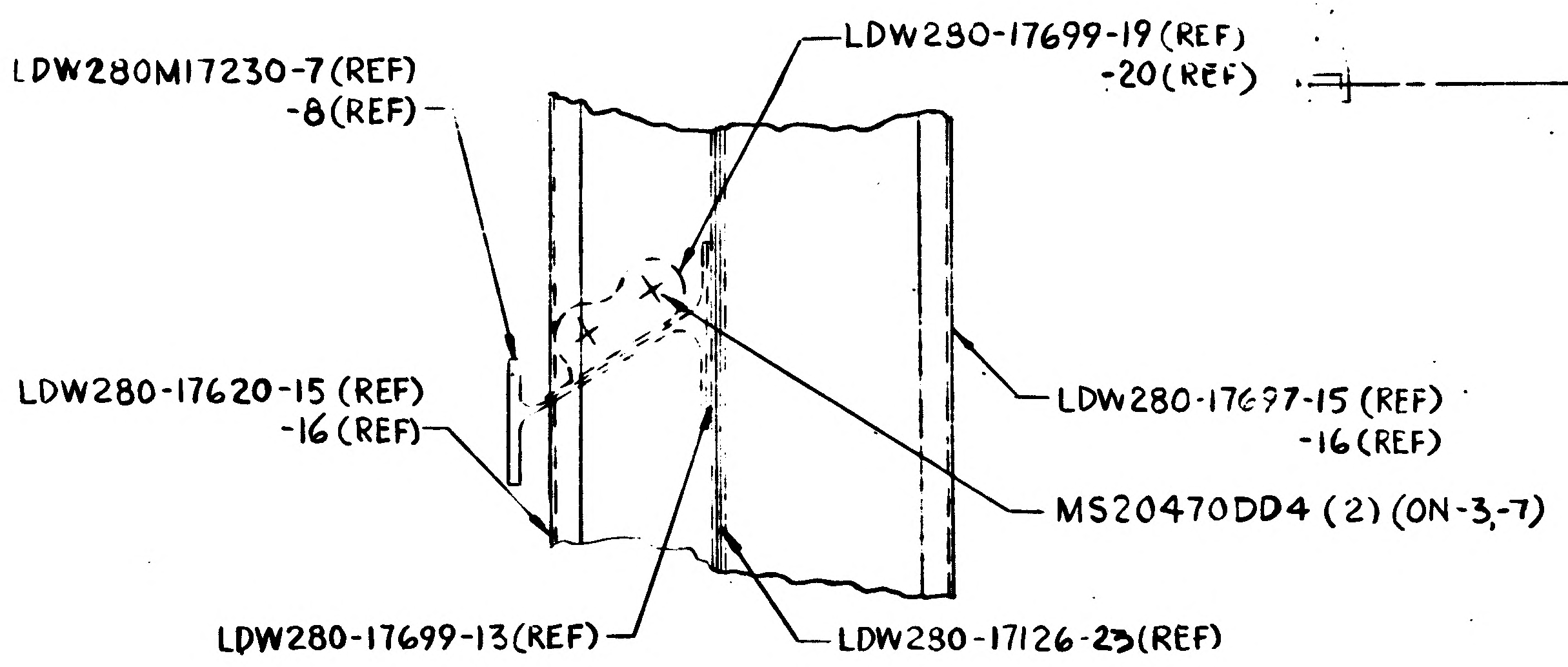
LDW280M17230-7(REF)
-8(REF)
LDW280-17699-19 (REF)
-20(REF)
LDW280-17620-15 (REF)
-16 (REF)
LDW280-17697-15 (REF)
-16 (REF)
MS20470DD4 (2) (ON-3,-7)
LDW280-17699-13(REF)
LDW280-17126-23(REF)

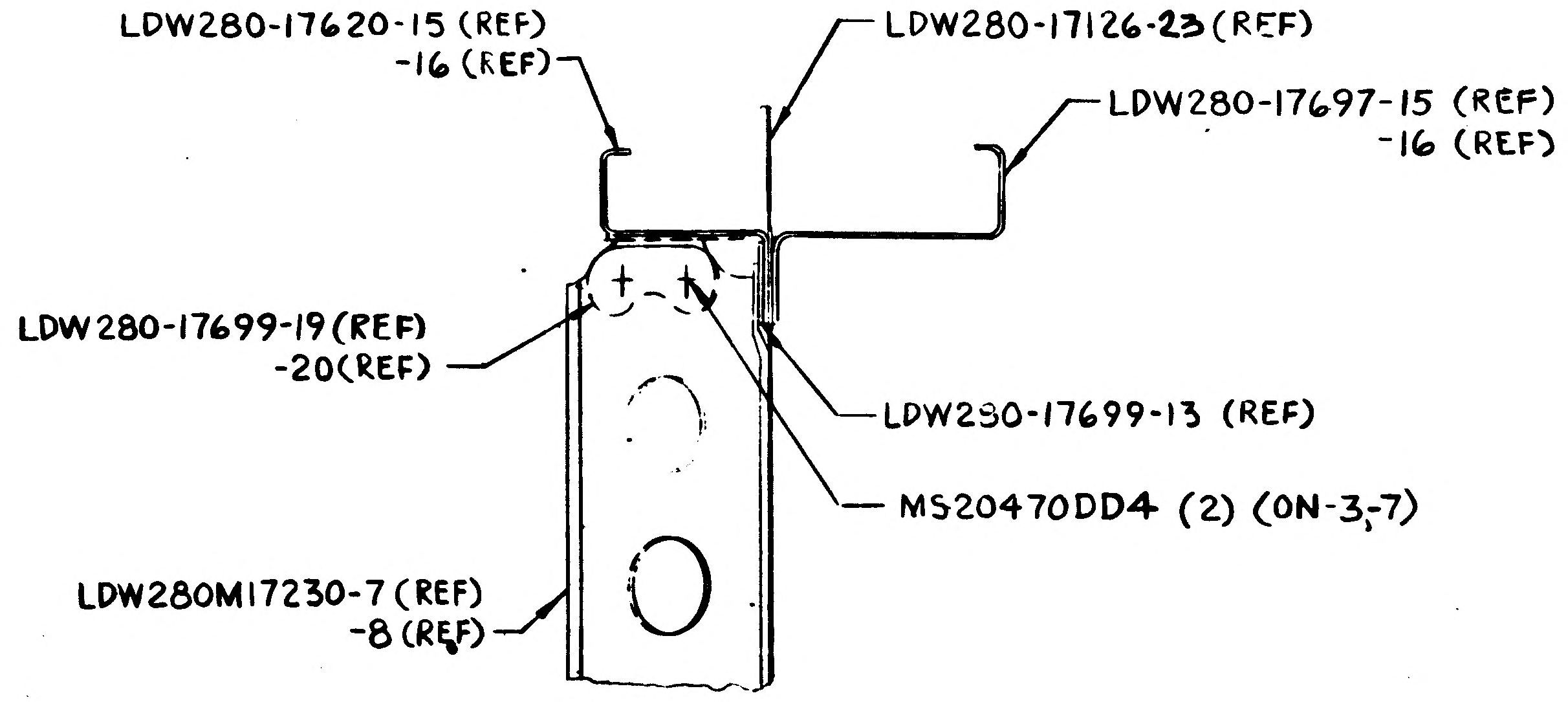
LDW280-17620-15 (REF)
-16 (REF)
LDW280-17126-23 (REF)
LDW280-17697-15 (REF)
-16 (REF)
LDW280-17699-19 (REF)
-20(REF)
LDW280-17699-13 (REF)
MS20470DD4 (2) (ON-3,-7)
LDW280M17230-7 (REF)
-8 (REF)

SECTION K K (SHOWN)
(ZONE 4B SH 3)

SECTION L-L (OPP)
(ZONE 4E SH4)

MANUFACTURING OPERATIONS
UNLESS OTHERWISE SPECIFIED
NOTES CHECKED ✓ APPLY TO THIS DWG.

PART NUMBER
AND ALL OTHER MARKINGS
IN REGION MARKED ☒
USE BOTH SIDES IF NECESSARY.

FILLET AND INSIDE CORNER
RADII TOLERANCES
.016R TO .062R ± .010
.063R TO .250R ± .015
OVER .250R ± .030

DEPTH SHOWN FOR TAPPED
HOLES IS FULL THDS. 2-3 IMP. THDS.
BEYOND PERMISSIBLE

EXTERNAL THREAD LENGTH
SHOWN INCLUDES
2 IMPERFECT THREADS MAX.

DO NOT CADMIUM PLATE & PAINT
HOLES OR SURFACES MARKED
WITH DOUBLE ASTERISK.

MISMATCH STEP OF ± .005
PERMISSIBLE DUE TO CHANGE
OF CUTTERS AT INSIDE
INTERSECTING SURFACES.

DIAMETERS MARKED
MUST BE CONCENTRIC WITHIN
FULL INDICATOR
READING.

HOLES MUST BE KEPT FREE OF
CHROME PLATING SOLUTION.

ALL DIMENSIONS SHOWN TO BE MET
AFTER CADMIUM PLATING.
THICKNESS OF PLATE .0003 MIN
TO .0005 MAX. MIN THICKNESS TO
BE .0002 ON THREADED AREAS.
NO ALLOWANCES FOR PLATING IN
HOLES

125 SURFACE ROUGHNESS
INCLUDING REAMED HOLES
PER MIL-STD-10

200 FOR ALL DRILLED HOLES

REMOVE ALL BURRS
BREAK ALL EDGES .015-.031

INSPECTION INFORMATION
MINIMUM PERMISSIBLE
AVERAGE EDGE DISTANCE
MARKED IS

SYMBOL ✓ DENOTES SURFACE
TO BE MACHINED

UNLESS OTHERWISE SPECIFIED
TOLERANCE ON FLANGES IS ± 1/32

LENGTHS OF AN, NAS & MS AL ALY
RIVETS SHORTER THAN 1 INCH ARE
NOT SPECIFIED

TOLERANCE ON LOFTED
DELINEATIONS IS

DWG SIZE 34x106
PRINTING INFO ONLY
FULL SIZE SHEET AREA (36x 108) = 27.0 SQ. FT.
1/2 SIZE SHEET AREA (1/4 OF FULL) = 6.75 SQ. FT.
PRINT TRIM LINE

J
H
G

LDW280-52526 A

LDW280-52526 A

03/03

NAS 9-1100

CODE IDENT NO. 26512
LDW280-52526 SH 5

GRUMMAN AIRCRAFT ENGRG CORP. BETHPAGE, L. I., NEW YORK

	SIZE	CODE IDENT NO.		
LM	J	26512	LDW280-52526	A
MODEL OR END ITEM	SCALE FULL & NOTED		SHEET 5.00	

FMG 73-7 6-64

THIS IS AN ORIGINAL DWG 3FRAMES

4 3 2 1

LDW280-52526 B

MODEL OR END ITEM	NEXT ASSY	MODULE OR SER NO.	REQD PER MODULE OR END ITEM
LM	LDW280-53510	LM3(33)	1
PART NO. LDW280-52526-5		GAEC SCH NO.	

MODEL OR END ITEM	NEXT ASSY	MODULE OR SER NO.	REQD PER MODULE OR END ITEM
LM	LDW280-52510	LM2(32)	1
PART NO. LDW280-52526-1		GAEC SCH NO. 511	

MODEL OR END ITEM	NEXT ASSY	MODULE OR SER NO.	REQD PER MODULE OR END ITEM
PART NO.		GAEC SCH NO.	

2

SH REV STATUS: FOR DESCRIPTION OF REV SEE SUBQ SH

SHEET	1.00	1.10	2.00	2.01	2.02	2.03	3.00	4.00	5.00
REV	A	B	A	B	A	B	B	B	A
SHEET									
REV									
SHEET									
REV									

LAST SECT LTR USED AA-AA
LAST DASH NO. USED -7

GRUMMAN REL INFO 4
PRIM NO. 207
E001 MP-14 8-12-4-6
EMF

UNLESS OTHERWISE SPECIFIED DIMENSIONS ARE IN INCHES.
TOLERANCE UNLESS SPECIFIED
FRACTIONS - DECIMALS – ANGLES
± 1/16 ± .020 ± 1/2°
ORIG DWG AUTH
DETAIL SPEC REQUIREMENT
CLASS II ENGRG CHANGE
CLASS I ENGRG CHANGE

CONTRACT NO. NAS9-1100
LINE ITEM ※1
DOCUMENTATION TYPE II

DRAWN BY B.YANOFF 11/2/66
LAYOUT BY J.BENTLEY
CHECKED BY MULLEN 11/18/66
GR LEADER
VEHICLE INT 12/1
STRUCTURES
STRUCTURES 12/2
WEIGHTS
PROJ ENGR R.M. Carbee 12-8-66
REL GROUP Tagliavia 12/14/66

GRUMMAN AIRCRAFT ENGRG CORP
BETHPAGE, L. I., NEW YORK

BULKHEAD INSTALLATION
DESCENT STAGE - FWD END

SIZE B
CODE IDENT NO. 26512
LDW280-52526 B
SCALE NONE
SHEET 1.00 OF 9

ENG 77.1 12-65

01 NAS 9-1100

REVISIONS FOR CONTINUATION OF REVISIONS SEE SHEET ______

CHANGE LTR	ITEM NO.	SHEET NO.	ZONE	GRUMMAN INFO ONLY	DET SPEC	CLASS I	CLASS II	ENGRG ORDER	DESCRIPTION	EFFECTIVITY	DISPOSITION OF EXISTING PARTS		CHANGED BY AND DATE	ENGRG APPD	GOVT APPD
											REWORK	SCRAP			
A	1	1.00,2.00, 3.00,4.00, 5.00						EOA1	EOA1 INITIAL DWG RELEASE PARTS MADE PER EO. ADDED SH 1.10	LM2(32) LM3(33)	NOT	REQD	B. YANOFF 11/1/66		
	2	3.00,4.00, 1.10,1.00	5A 8F					EOA2	ADDED TO -1 IN FLD, B/M LDW280-18065-12, -13(2) ADDED NAS697A08(3), NAS1097AD3(6) & DRILL# 19(3).		✓				
	3	2.00, 1.10, 3.00 5.00	10A, 8G 3H, 6G, 4G 3J					EOA3	IN FLD & B/M ON-3 LDW280-17126-23 WAS LDW280-17126-21		✓				
	4	1.10 2.01 3.00	3A					EOA4	ON-1 REMOVED LEM-3 REQM'TS; ADDED -5, -7 & LDW280-53516-1	LM3(33)	✓				
	5	1.10 2.03 3.00 4.00 5.00	7H					EOA5	FOR -3 & -7 ASSY'S IN FLD & B/M REPLACED HL10V-12-8(4) WITH GB511D-6-9(4) IN FLD, ADDED SECT AA-AA & SHIM AS REQD .055 MAX. WAS .032 MAX.	LM3(33) LM2(32)	✓				
	6	2.01 3.00 4.00	5A 8F					EOA6	REF. EOA2 ADDED LDW280-18065-23(2) & LDW280-18065-22(1). REMOVED FROM -1; DRILL# 19(1 HOLE), NAS697A08(1) FARSIDE, NAS1097-AD3(2) FLUSH NS.(3 PLACES). LDW280-18065-23 WAS -13, LDW280-18065-22 WAS -12		✓				
B	1	2.01 3.00 4.00	5A 8F					EOB1	REF. EO A6 ADDED LDW280-18065-32 & -37, WAS LDW280-18065-22 & -37. ADDED NOTE #12.		✓				
	2	2.01							REF. EOB1 "WAS LDW280-18065-22 & -37" SHOULD BE "WAS LDW280-18065-22 & -23"		✓		MULLEN		
	3								REF EO A5 GB511K-6-9(4) WAS GB511D-6-9(4)		✓		11-18-66 GB	RMG 12-8-66	12/9/66

CHG APPROVED	LTR	~~GROUP LDR~~	VEH DES INT	[illegible]	[illegible]	WEIGHTS
	~~A~~					
	B				EV	

GRUMMAN AIRCRAFT ENGRG CORP., BETHPAGE, L. I., NEW YORK

SIZE	CODE IDENT NO.		
B	26512	LDW280-52526	B
SCALE NONE			SHEET 1.10

ENG 77.16 3-66

01

NAS 9-1100

				1		1		LDW280M17136-5	E	FITTING	SEE DWG						3C
			1		1			LDW280M17111-3		CAPSTRIP							10B
				2		2		LDW280-18065-37		CLIP							1A, 4F
				1		1		LDW280-18065-32		CLIP							5A
			1					LDW280-53516-1		TRUSS INSTL							3A
					1			LDW280-23516-3		TRUSS INSTL							3A
			1		1			LDW280-17699-20		CLIP							4E
			1		1			LDW280-17699-19		CLIP							4E
			2		2			LDW230-17699-13		PLATE							4B
			1		1			LDW280-17697-16		STIFFENER							9E
			1		1			LDW280-17697-15									9B
			1		1			LDW280-17696-18									5F
			1		1			-17									8A
			1		1			-14									5F
			1		1			-13									4A
			2		2			-12									9A
			2		2			LDW280-17696-11		STIFFENER							7A
			1		1			LDW280-17695-14		ANGLE							5F
			1		1			-13									5A
			2		2			-12									7F
			2		2			LDW280-17695-11		ANGLE							6A
			1		1			LDW280 17688-16		CHANNEL							10E
			1		1			LDW280 17688-15		CHANNEL							10B
			1		1			LDW280-17624-16		STIFFENER							4E
			1		1			LDW280-17624-15	E	STIFFENER	SEE DWG						3A
			-7	-5	-3	-1	CODE IDENT	PART NO.	I&T	NOMENCLATURE OR DESCRIPTION	MATERIAL	GOVT SPEC	COML SPEC	STOCK SIZE	PROCESS SYM	FINISH NO.	ZONE
QTY PER ASSEMBLY																	

SYM OR NO.	PROCESS OR FINISH	GRUMMAN SPEC OR MILITARY SPEC	SYM OR NO.	PROCESS OR FINISH	GRUMMAN SPEC OR MILITARY SPEC	SYM OR NO.	PROCESS OR FINISH	GRUMMAN SPEC OR MILITARY SPEC

I & T: IDENTIFICATION AND TRACEABILITY IN ACCORDANCE WITH : NONE

GRUMMAN AIRCRAFT ENGRG CORP, BETHPAGE, L. I., NEW YORK

SIZE	CODE IDENT NO.		
B	26512	LDW280-52526	B

SCALE NONE SHEET 2.01

ENG 77.2 7-65

01

NAS 9-1100

QTY PER ASSEMBLY							CODE IDENT	PART NO.	I&T	NOMENCLATURE OR DESCRIPTION	MATERIAL	GOVT SPEC	COML SPEC	STOCK SIZE	PROCESS SYM	FINISH NO.	ZONE
			-7	-5	-3	-1											
			1		1			LDW280M17471-2	E	FITTING	SEE DWG						9J
			1		1			LDW280M17471-1		FITTING	SEE DWG						9J
			4		4			GB511K-6-9		BOLT	GRUMMAN STD						
			4		4			GB511K-4-8									
			4		4			GB511K-4-6									
			8	4	8	4		GB511K-4-5									
			4		4			GB511K-4-3									
			10		10			GB511K-3-5									
			6		6			GB511K-3-4									
			8	4	8	4		GB511K-08-6									
			6		6			GB511K-08-5									
			14		14			GB511K-08-3									
			4		4			GB511K-08-2		BOLT							
			32	4	32	4		GN512H-08	E	NUT-COLLAR	GRUMMAN STD						

SYM OR NO.	PROCESS OR FINISH	GRUMMAN SPEC OR MILITARY SPEC	SYM OR NO.	PROCESS OR FINISH	GRUMMAN SPEC OR MILITARY SPEC	SYM OR NO.	PROCESS OR FINISH	GRUMMAN SPEC OR MILITARY SPEC

I & T: IDENTIFICATION AND TRACEABILITY IN ACCORDANCE WITH : NONE

GRUMMAN AIRCRAFT ENGRG CORP, BETHPAGE, L. I., NEW YORK

SIZE B | CODE IDENT NO. 26512 | LDW280-52526 | B

SCALE NONE | SHEET [illegible]

ENG 77.2 7-65

01

NAS 9-1100

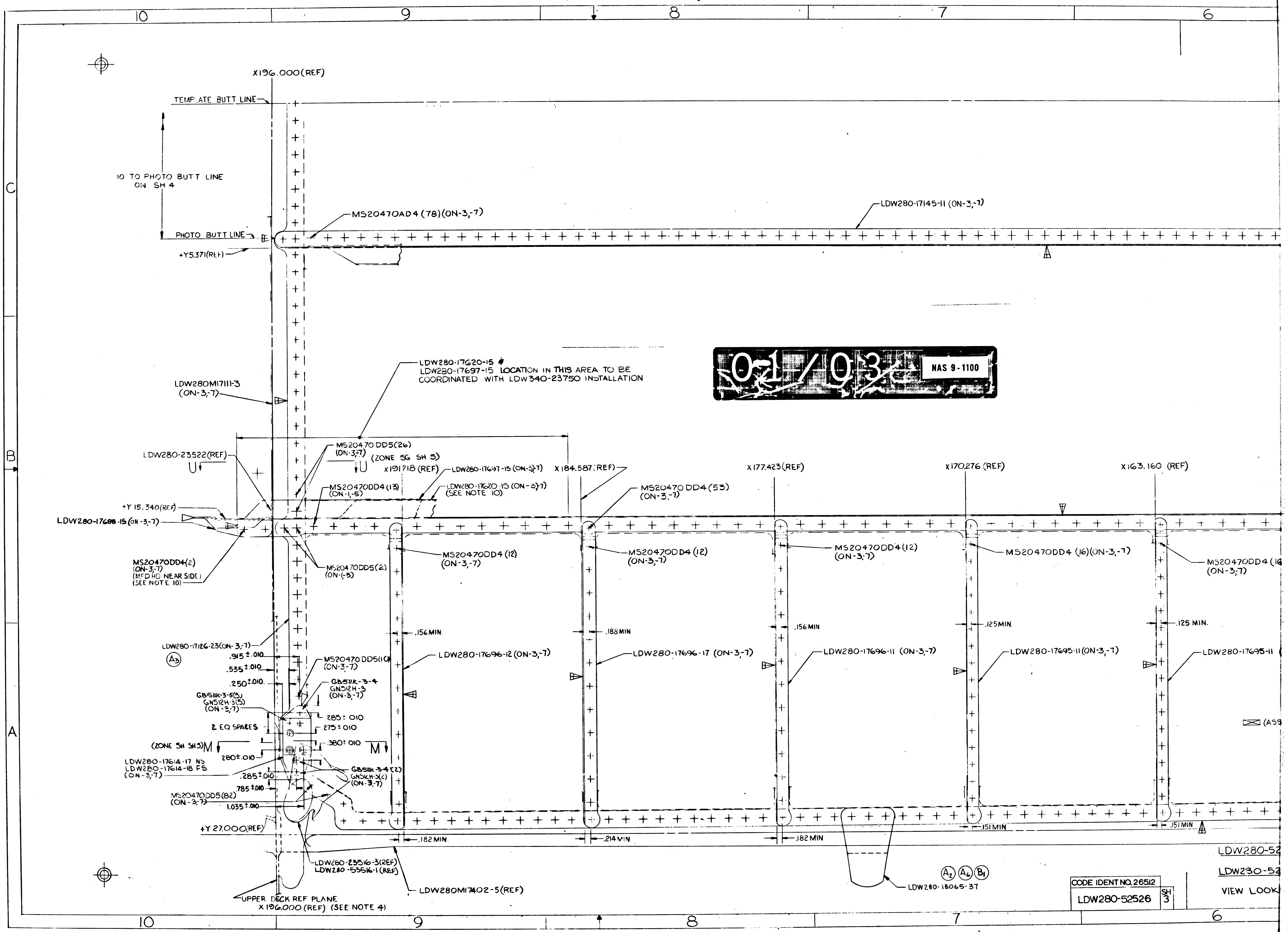10
9
8
7
6
C
B
A
X196.000(REF)
TEMPLATE BUTT LINE
10 TO PHOTO BUTT LINE ON SH 4
PHOTO BUTT LINE
+Y5.371(REF)
MS20470AD4 (78)(ON-3,-7)
LDW280-17145-11 (ON-3,-7)
LDW280M17111-3 (ON-3,-7)
LDW280-17620-15 & LDW280-17697-15 LOCATION IN THIS AREA TO BE COORDINATED WITH LDW340-23750 INSTALLATION
01/03
NAS 9-1100
LDW280-23522(REF)
U
MS20470 DD5(26) (ON-3,-7)
U (ZONE 5G SH 5)
X191.718 (REF)
LDW280-17697-15 (ON-3,-7)
X184.587 (REF)
X177.423(REF)
X170.276 (REF)
X163.160 (REF)
MS20470DD4 (13) (ON-1,-5)
LDW280-17620-15 (ON-3,-7) (SEE NOTE 10)
MS20470 DD4 (53) (ON-3,-7)
+Y 15.340(REF)
LDW280-17688-15 (ON-3,-7)
MS20470DD4(2) (ON-3,-7) (MFD HD NEAR SIDE) (SEE NOTE 10)
MS20470DD5(2) (ON-1,-5)
MS20470DD4 (12) (ON-3,-7)
MS20470DD4 (12) (ON-3,-7)
MS20470DD4(12) (ON-3,-7)
MS20470DD4 (16)(ON-3,-7)
MS20470DD4 (16 (ON-3,-7)
.156 MIN
.188 MIN
.156 MIN
.125 MIN.
.125 MIN.
LDW280-17126-23(ON-3,-7)
A3
LDW280-17696-12 (ON-3,-7)
LDW280-17696-17 (ON-3,-7)
LDW280-17696-11 (ON-3,-7)
LDW280-17695-11(ON-3,-7)
LDW280-17695-11
.915 ±.010
.535 ±.010
.250 ±.010
MS20470 DD5(10) (ON-3,-7)
GB511K-3-4 GN512H-3 (ON-3,-7)
GB511K-3-5(5) GN512H-3(5) (ON-3,-7)
.285 ± .010
.275 ± .010
2 EQ SPACES
(ZONE 5H SH 5) M
.380 ± .010
M
280 ±.010
(ASS
LDW280-17614-17 NS
LDW280-17614-18 FS
(ON-3,-7)
.285 ±.010
GB511K-3-4 (2) GN512H-3(2) (ON-3,-7)
.785 ±.010
MS20470DD5(82) (ON-3,-7)
1.035 ±.010
+Y 27.000(REF)
.151 MIN
.151 MIN
.182 MIN
.214 MIN
.182 MIN
LDW280-23516-3(REF)
LDW280-53516-1(REF)
LDW280M17402-5(REF)
LDW280-18065-37
A2 A6 B1
UPPER DECK REF PLANE X196.000 (REF) (SEE NOTE 4)
LDW280-52
LDW230-52
VIEW LOOK
CODE IDENT NO. 26512
LDW280-52526
SH 3

6
5
4
3
2
X131.140 (REF)
X136.015 (REF)
GR501A-4E (ON-1,-5) (MFD HD NEAR SIDE) (SEE NOTE 10)
GR501A-4H (2) (CSK N S LDW280M17136) (ON-1 (SEE NOTE 10)
TEMPLATE BUTT LINE
+Y0.00
A
A
(ZONE 10G SH 5)
GR500A-4D (4) (ON-1,-5) (MFD HD NEAR SIDE) (SEE NOTE 10)
LDW280M17136-5 (ON-1) (SEE NOTE 4)
LDW280-17145-11 LOCATION IN THIS AREA TO BE COORDINATED WITH LDW280-23900 INSTALLATION
LDW280-17149-13 (ON-1,-5)
MS20470AD4 (7) (ON-1,-5)
10 TO PHOTO BUTT LINE ON SH. 4
P
LDW280-17150-11 (ON-1,-5)
MS20470DD5 (7) (ON-1,-5)
X133.765 (REF)
MS20470DD5 (7) (ON-3,-7)
MS20470DD5 (2) (ON-1,-5)
R
PHOTO BUTT LINE
LDW280-17341-21 (ON-3,-5)
NAS1097DD5 (8) ON-3 CSK LDW280-17145-11
+Y5.371 (REF)
MS20470AD4 (16) (ON-1,-5)
P
(ZONE 4G SH 5)
MS20470 DD5 (5) (ON-3
R
(ZONE 3H SH 5)
MS20470DD5 (12) (ON-3,-7)
LDW280-17151-11 (ON-3,-7)
LDW280-23900 (REF)
LDW280M17418-1 (ON-3,-7)
X163.160 (REF)
X156.075 (REF)
X148.990 (REF)
X142.000 (REF)
K
(ZONE 3G SH 5)
X138.193 (REF)
X135.198 (REF)
X141.188 (REF)
F
MS20470DD5 (14) (ON-3,-7)
.214 MIN.
.166
F (ZONE 6J SH 5)
G120-170-5-11A (ON-3,-7)
+Y15.340 (REF)
LDW280-17699-13 (ON-3-7)
LDW280-17699-19 (ON-3,-7)
6) (ON-3,-7)
MS20470DD4 (16) (ON-3,-7)
MS20470DD4 (16) (ON-3,-7)
MS20470DD4 (16) (ON-3,-7)
MS20470DD4 (32) (ON-3,-7)
K
.214 MIN
LDW280-17624-13 (ON-3,-7)
MS20470DD5 (25) (ON-3,-7)
.125 MIN.
.156 MIN
.188 MIN.
.188 MIN
MS20470DD4 (4) (ON-3)-7)
.188 MIN.
LDW280M17230-7 (ON-3,-7)
.188 MIN.
.214 MIN.
(ON-3,-7)
LDW280-17695-11 (ON-3,-7)
LDW280-17695-13 (ON-3,-7)
LDW280-17696-13 (ON-3,-7)
MS20470DD4 (30) (ON-3,-7)
LDW280-17624-15 (ON-3,-7)
LDW280-17613-11 (2) (ON-3,-7)
Y
GB511K-4-5 (4) GN512H-4 (4) (ON-3,-7)
GB511K-08-3 GN512H-08 (ON-3,-7)
LDW280-23516-3 (ON-3) LDW280-53516-1 (ON-7) (SEE NOTE 4)
A4
LDW280-17624-11 (ON-3,-7)
.375 ±.010
LDW280-17613-15 (2) (ON-3,-7)
(ASSY)
GB511K-08-2 (2) GN512H-08 (2) (ON-3,-7)
.214 MIN
.375 ±.010
.437 ±.010
LDW280-17613-13 (2) (ON-3,-7)
GB511K-08-3 (2) GN512H-08 (ON-3) LOCATE FROM LDW280M17141-3
GB511K-08-5 (3) GN512H-08 (3) (ON-3,-7)
(ZONE 6G SH 5)
E
(ZONE 8G SH 5)
J
.214 MIN
MS20470 DD5 (16) (ON-3,-7)
.375 ±.010
.562 ±.010
.938 ±.010
Y (ZONE 2A SH 3)
LDW280M17402-5 (ON-3,-7) (SEE NOTE 4)
X134.050 (REF)
X137.540 (REF)
.151 MIN
.182 MIN
.214 MIN
RH BEAM PANEL REF PLANE +Y27.000 (REF) (SEE NOTE 4)
GB511K-08-6 (2) GN512H-08 (2) (ON-1) LOCATE FROM LDW280M17141-3
GB511K-08-3 (4) GN512H-08 (4) (ON-3,-7)
.050 SHIM MAX (SEE NOTE 1)
+Y27.375 (REF)
GB511K-4-3 (2) GN512H-4 (2) (ON-3,-7) LOCATE FROM LDW280M17325-1
E
J
LDW280M17141-3 (ON-3,-7) (SEE NOTE 4)
GB511K-4-5 (2) GN512H-4 (2) (ON-1,-5) LOCATE FROM LDW280M17325-1
LDW280M17325-1 (ON-3,-7) (SEE NOTE 4)
LDW280M17470-3 (ON-3,-7) (SEE NOTE 4)
LDW280-18065-32 A2
X150.750 (REF)
A6 B1
C
LOWER DECK REF PLANE X131.140 (REF) (SEE NOTE 4)
C (ZONE 10H SH 5)
+Z81.000 (REF)
LDW280M17418-1 (REF)
LDW280-17613-11 (REF)
.531
±.010
6
GB511K-4-8 (4) GN512H-4 (4) (ON-3,-7)
GB511K-4-6 (4) GN512H-4 (4) (ON-3,-7)
.375 ±.010
.375 ±.010
.375 ±.010
.437 ±.010
.500 ±.010
LDW280-17613-15 (REF)
.562 ±.010
.375 ±.010
.500 ±.010
.375 ±.010
.625 ±.010
.500 ±.010
.812 ±.010
LDW280-17613-13 (REF)
LDW280M17402-5 (REF)
VIEW Y-Y (SHOWN)
(ZONE 3A SH. 3)
VIEW T-T (OPP)
(ZONE 3C SH 4)

02403 NAS 9-1100

LDW280-52526-1 INSTL A1 A4
-3 ASSY
LDW280-52526-5 INSTL
-7 ASSY
VIEW LOOKING INBD AT +Z81

NOTES
1 SHIM AS REQUIRED USING AL ALY QQ-A-250/4 2024-T3 FIN 88
2 NO TOOLING HOLES PERMITTED IN PARTS
3 INSTALL FASTENERS PER: LSP14-15302, LSP14-15303, LSP14-153C
4 FOR BASIC JIG DATA SEE LDW 280-235
5. TOLERANCE ON LINES MARKED ◁ T
6. FASTENER MANUFACTURED HEAD (O THAN C'S'K ATTACHMENTS) TO BE C SIDE UNLESS OTHERWISE SPECIFIE
7. HI-LOK PINS & COLLARS TO BE IN AC WITH APPLICABLE PORTIONS OF M & NAS 498
8 TOLERANCE ON LOFTED LOCATION RIVETS THRU LDW280-17126-2 OTHERS TO BE LOCATED FROM PARTS
9. PERMISSIBLE OIL CAN DEPTH OF BETWEEN STIFFENERS IS ±.100.
10 INSTALL RIVETS WET AND OVERCOAT WITH EPON 919 PER LSP14-14102.
11. TOLERANCE ON LINES MARKED <] TO E
12. GR500A-5G RIVETS MAY BE SUBSTITU MS20470DD5 RIVETS WHERE REQD.

CODE IDENT NO. 26512	
LDW280-52526	SH 3

CODE IDENT NO. 26512	
LDW280-52526	SH 3

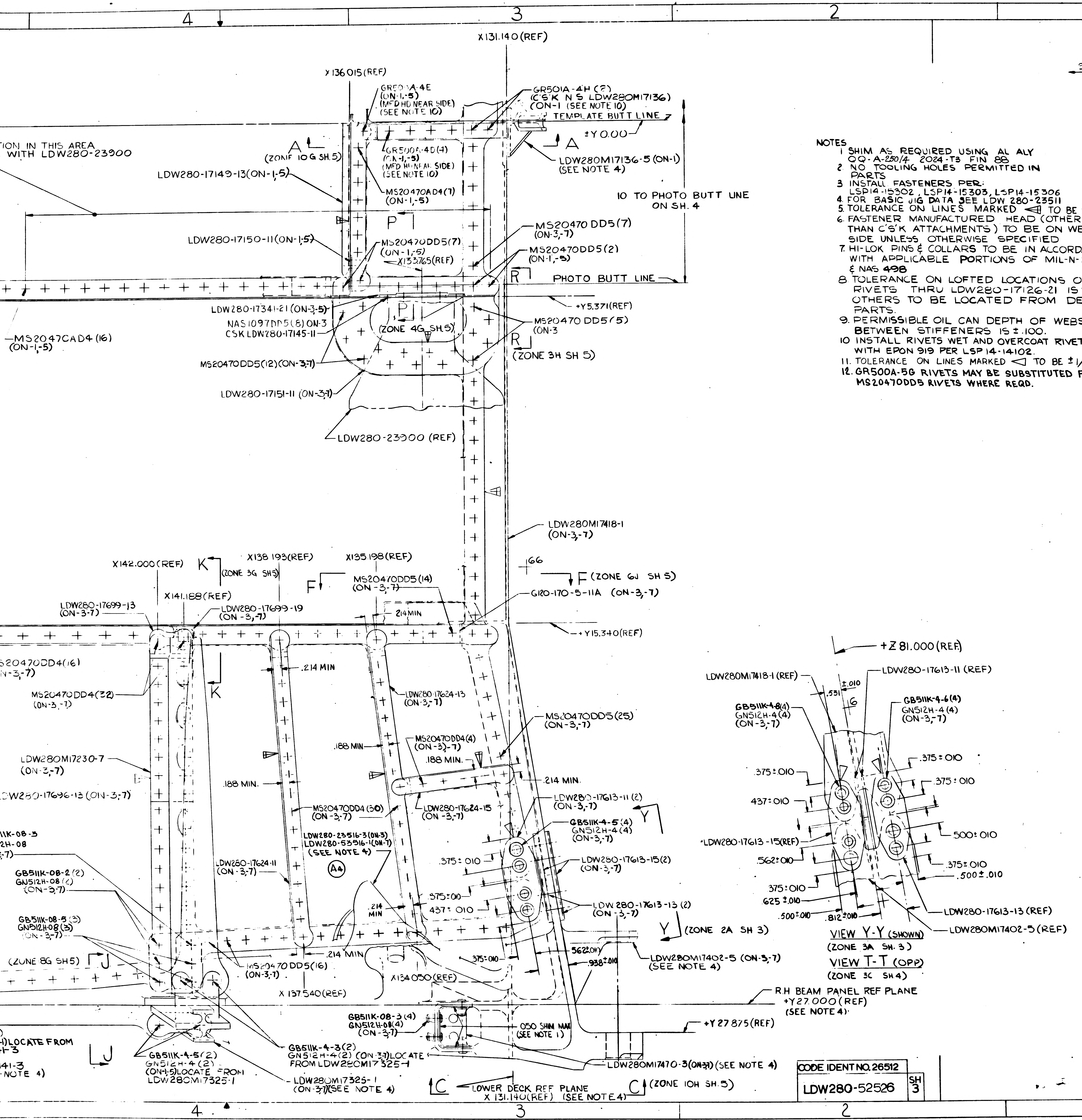
4
3
2
X 131.140 (REF)
X 136 015 (REF)
ION IN THIS AREA
WITH LDW280-23900
A (ZONE 10 G SH. 5)
LDW280-17149-13 (ON-1,-5)
LDW280-17150-11 (ON-1,-5)
MS2047CAD4 (16)
(ON-1,-5)
GR500A-4E
(ON-1,-5)
(MFD HD NEAR SIDE)
(SEE NOTE 10)
GR500A-4D (4)
(ON-1,-5)
(MFD HD NEAR SIDE)
(SEE NOTE 10)
MS20470AD4 (7)
(ON-1,-5)
P
MS20470DD5 (7)
(ON-1,-5)
X133.765 (REF)
GR501A-4H (2)
(C'S'K N S LDW280M17136)
(ON-1 (SEE NOTE 10)
TEMPLATE BUTT LINE
±Y 0.00
A
LDW280M17136-5 (ON-1)
(SEE NOTE 4)
10 TO PHOTO BUTT LINE
ON SH. 4
MS20470 DD5 (7)
(ON-3,-7)
MS20470DD5 (2)
(ON-1,-5)
R
PHOTO BUTT LINE
+Y5.371 (REF)
LDW280-17341-21 (ON-3,-5)
NAS1097DD5 (8) ON-3
CSK LDW280-17145-11
P
(ZONE 4G SH.5)
MS20470 DD5 (5)
(ON-3
R
(ZONE 3H SH 5)
MS20470DD5 (12) (ON-3,-7)
LDW280-17151-11 (ON-3,-7)
LDW280-23900 (REF)
LDW280M17418-1
(ON-3,-7)
X142.000 (REF)
K (ZONE 3G SH5)
X138 193 (REF)
X135.198 (REF)
F
MS20470DD5 (14)
(ON-3,-7)
166
F (ZONE 6J SH 5)
G120-170-5-11A (ON-3,-7)
X141.188 (REF)
LDW280-17699-13
(ON-3-7)
LDW280-17699-19
(ON-3,-7)
214 MIN
+Y15.340 (REF)
S20470DD4 (16)
N-3,-7)
MS20470DD4 (32)
(ON-3,-7)
K
.214 MIN
LDW280-17624-13
(ON-3,-7)
MS20470DD5 (25)
(ON-3,-7)
.188 MIN
MS20470DD4 (4)
(ON-3,-7)
.188 MIN.
LDW280M17230-7
(ON-3,-7)
.188 MIN.
.214 MIN.
LDW280-17696-13 (ON-3,-7)
MS20470DD4 (30)
(ON-3,-7)
LDW280-17624-15
(ON-3,-7)
LDW280-17613-11 (2)
(ON-3,-7)
Y
GB511K-4-5 (4)
GN512H-4 (4)
(ON-3,-7)
LDW280-23516-3 (ON-3)
LDW280-53516-1 (ON-7)
(SEE NOTE 4)
A4
1K-08-3
2H-08
-7)
LDW280-17624-11
(ON-3,-7)
.375 ± 010
LDW250-17613-15 (2)
(ON-3,-7)
GB511K-08-2 (2)
GN512H-08 (2)
(ON-3,-7)
.375 ± 010
.214
MIN
437 ± 010
LDW 280-17613-13 (2)
(ON-3,-7)
GB511K-08-5 (3)
GN512H-08 (3)
(ON-3,-7)
Y (ZONE 2A SH 3)
.214 MIN
(ZONE 8G SH5) J
MS20470 DD5 (16)
(ON-3,-7)
X134 050 (REF)
.375 ± 010
.562 ± 010
.938 ± 010
LDW280M17402-5 (ON-3,-7)
(SEE NOTE 4)
X 137 540 (REF)
R.H BEAM PANEL REF PLANE
+Y27.000 (REF)
(SEE NOTE 4)
GB511K-08-3 (4)
GN512H-08 (4)
(ON-3,-7)
.050 SHIM MAX
(SEE NOTE 1)
+Y 27 875 (REF)
-1) LOCATE FROM
-1-3
141-3
NOTE 4)
J
GB511K-4-5 (2)
GN512H-4 (2)
(ON-1,-5) LOCATE FROM
LDW280M17325-1
GB511K-4-3 (2)
GN512H-4 (2) (ON-3,-7) LOCATE
FROM LDW280M17325-1
LDW280M17470-3 (ON-3,-7) (SEE NOTE 4)
LDW280M17325-1
(ON-3,-7) (SEE NOTE 4)
C
LOWER DECK REF PLANE
X 131.140 (REF) (SEE NOTE 4)
C (ZONE 10H SH.5)
+Z 81.000 (REF)
LDW280M17418-1 (REF)
LDW280-17613-11 (REF)
.531
±.010
6
GB511K-4-8 (4)
GN512H-4 (4)
(ON-3,-7)
GB511K-4-6 (4)
GN512H-4 (4)
(ON-3,-7)
.375 ± 010
.375 ± 010
.375 ± 010
437 ± 010
.500 ± 010
LDW280-17613-15 (REF)
.562 ± 010
.375 ± 010
.500 ± .010
375 ± 010
.625 ± .010
.500 ± .010
.812 ± .010
LDW280-17613-13 (REF)
LDW280M17402-5 (REF)
VIEW Y-Y (SHOWN)
(ZONE 3A SH. 3)
VIEW T-T (OPP)
(ZONE 3C SH 4)

NOTES
1 SHIM AS REQUIRED USING AL ALY QQ-A-250/4 2024-T3 FIN 88
2 NO TOOLING HOLES PERMITTED IN PARTS
3 INSTALL FASTENERS PER: LSP14-15302, LSP14-15303, LSP14-15306
4. FOR BASIC JIG DATA SEE LDW 280-23511
5. TOLERANCE ON LINES MARKED ◁ TO BE ± 1/32
6. FASTENER MANUFACTURED HEAD (OTHER THAN C'S'K ATTACHMENTS) TO BE ON WEB SIDE UNLESS OTHERWISE SPECIFIED
7. HI-LOK PINS & COLLARS TO BE IN ACCORDANCE WITH APPLICABLE PORTIONS OF MIL-N-25027 & NAS 498
8. TOLERANCE ON LOFTED LOCATIONS OF RIVETS THRU LDW280-17126-21 IS ± 1/32 OTHERS TO BE LOCATED FROM DETAIL PARTS.
9. PERMISSIBLE OIL CAN DEPTH OF WEBS BETWEEN STIFFENERS IS ± .100.
10 INSTALL RIVETS WET AND OVERCOAT RIVET HEADS WITH EPON 919 PER LSP 14-14102.
11. TOLERANCE ON LINES MARKED ◁ TO BE ± 1/64
12. GR500A-5G RIVETS MAY BE SUBSTITUTED FOR MS20470DD5 RIVETS WHERE REQD.

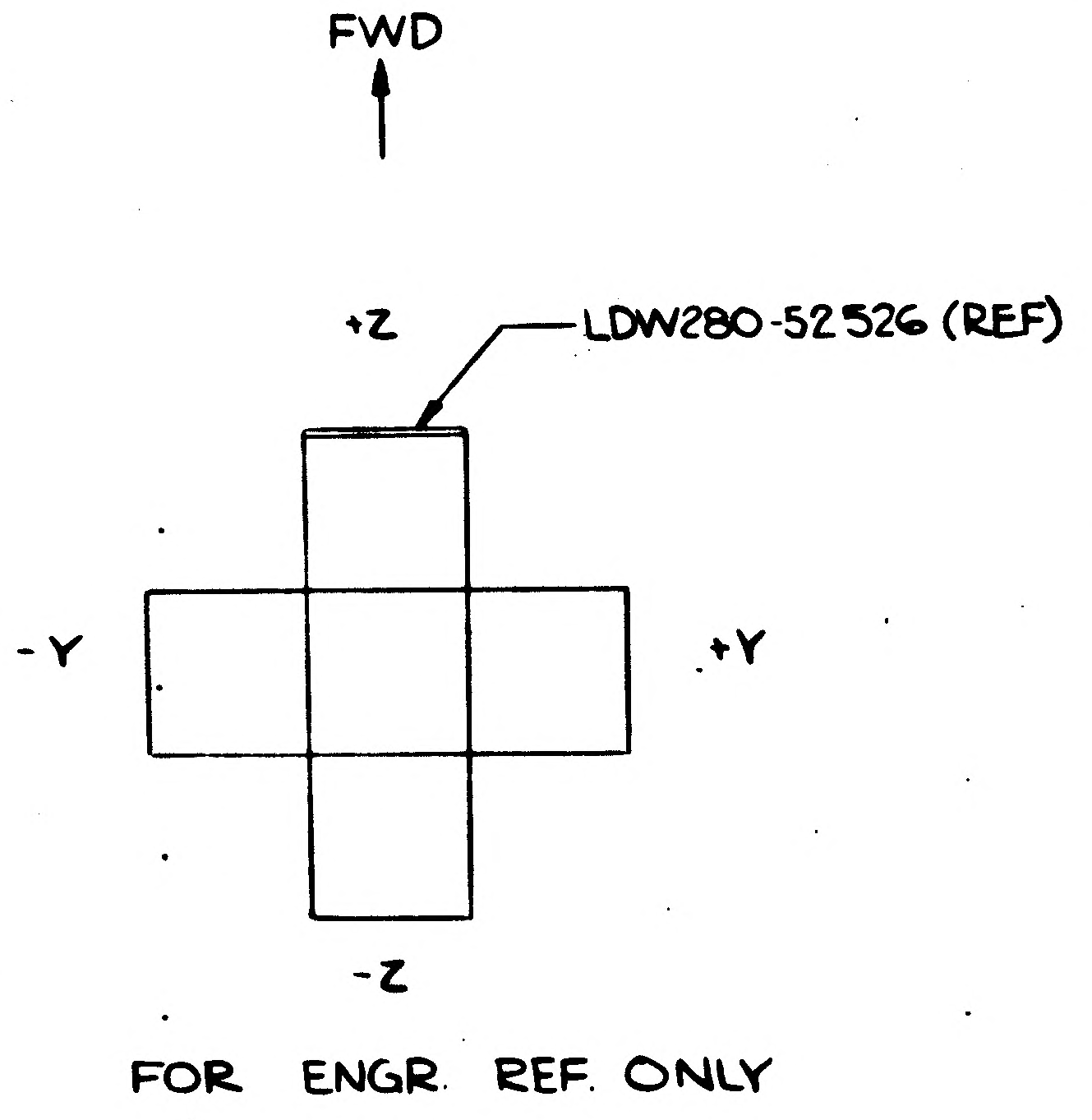
FWD
+Z
LDW280-52526 (REF)
-Y
+Y
-Z
FOR ENGR. REF. ONLY

MANUFACTURING OPERATIONS UNLESS OTHERWISE SPECIFIED NOTES CHECKED ✓ APPLY TO THIS DWG.	
RUBBER STAMP PART NUMBER AND ALL OTHER MARKINGS IN REGION MARKED ☒ USE BOTH SIDES IF NECESSARY.	✓
FILLET AND INSIDE CORNER RADII TOLERANCES .016R TO .062R ± .000 .063R TO .250R ± .015 OVER .250R ± .030	
DEPTH SHOWN FOR TAPPED HOLES IS FULL THDS. 2-3 IMP. THDS. BEYOND PERMISSIBLE	
EXTERNAL THREAD LENGTH SHOWN INCLUDES 2 IMPERFECT THREADS MAX.	
DO NOT CADMIUM PLATE & PAINT HOLES OR SURFACES MARKED WITH DOUBLE ASTERISK.	
MISMATCH STEP OF ± .005 PERMISSIBLE DUE TO CHANGE OF CUTTERS AT INSIDE INTERSECTING SURFACES.	
DIAMETERS MARKED MUST BE CONCENTRIC WITHIN FULL INDICATOR READING.	
HOLES MUST BE KEPT FREE OF CHROME PLATING SOLUTION.	
ALL DIMENSIONS SHOWN TO BE MET AFTER CADMIUM PLATING. THICKNESS OF PLATE .0003 MIN TO .0005 MAX. MIN THICKNESS TO BE .0002 ON THREADED AREAS. NO ALLOWANCES FOR PLATING IN HOLES	
125 √ SURFACE ROUGHNESS INCLUDING REAMED HOLES PER MIL-STD-10	
200 √ FOR ALL DRILLED HOLES	
REMOVE ALL BURRS. BREAK ALL EDGES .015-.031	
INSPECTION INFORMATION MINIMUM PERMISSIBLE EDGE DISTANCE IS 1½ FASTENER DIA FROM FASTENER ℄	✓
SYMBOL √ DENOTES SURFACE TO BE MACHINED	
UNLESS OTHERWISE SPECIFIED TOLERANCE ON FLANGES IS ± 1/32	
LENGTHS OF AN, NAS & MS AL ALY RIVETS SHORTER THAN 1 INCH ARE NOT SPECIFIED	
TOLERANCE ON LOFTED DELINEATIONS IS ± 1/16	✓

DWG SIZE 34 x 106
2708 SQ. FT.
FULL-SIZE SHEET AREA (36 x 108)
1/4 SIZE SHEET AREA (1/4 OF FULL)
PRINT TRIM LINE

C
B
A
1

LDW280-52526 B
LDW280-52526 B

03/03
NAS 9-1100

CODE IDENT NO. 26512
LDW280-52526 SH 3

GRUMMAN AIRCRAFT ENGRG. CORP. BETHPAGE, L. I., NEW YORK

MODEL OR END ITEM	SIZE	CODE IDENT NO.		
LM	J	26512	LDW280-52526	B
	SCALE FULL		SHEET 3.00	

FOR PHOTO REPRODUCTION

8d-C-3-PR

THIS IS AN ORIGINAL DWG 3FRAMES

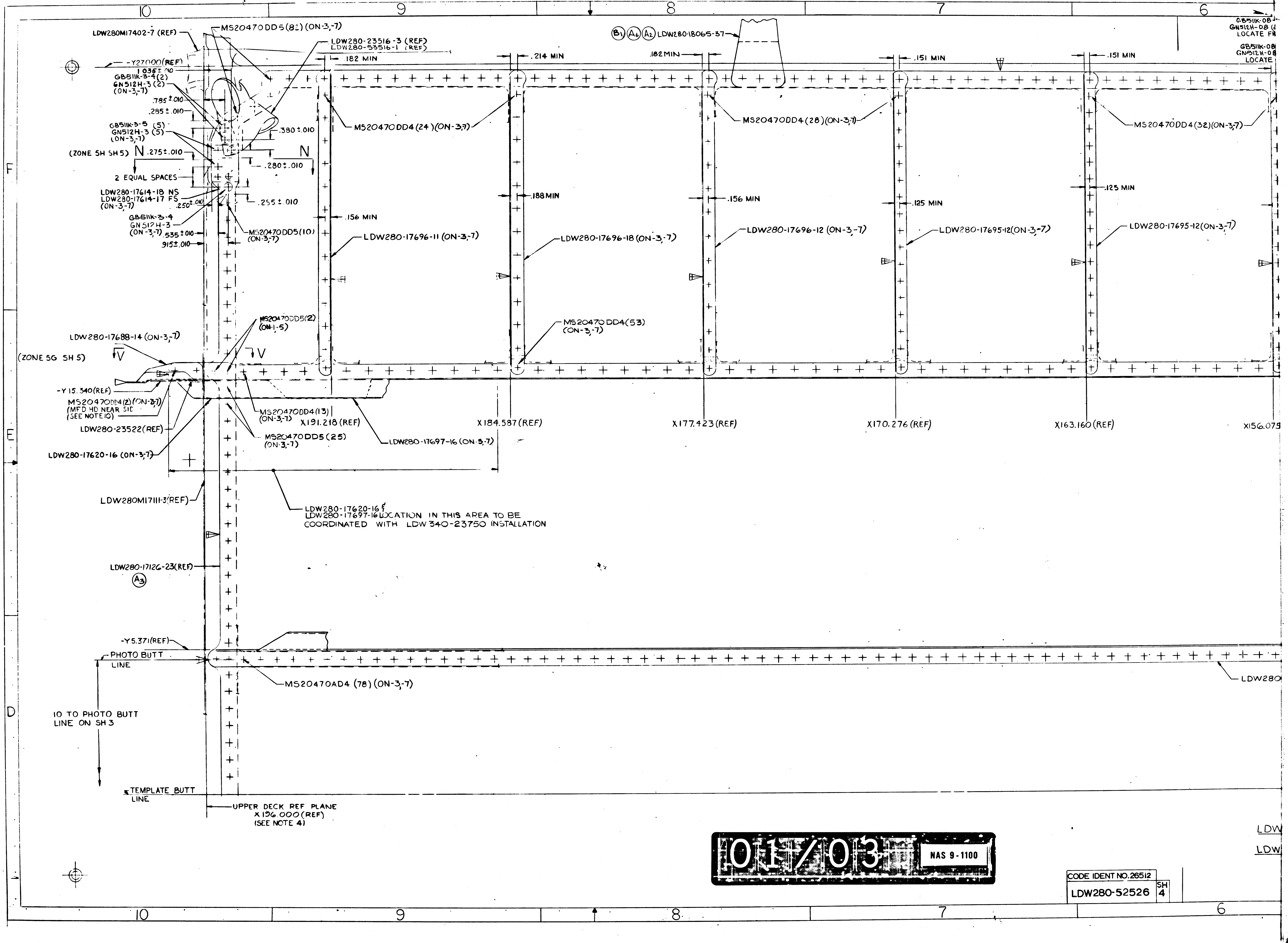

10
9
8
7
6
F
E
D
LDW280M17402-7 (REF)
MS20470DD5(8) (ON-3,-7)
LDW280-23516-3 (REF)
LDW280-53516-1 (REF)
(B1)(A6)(A2) LDW280-18065-37
-Y27.000(REF)
1.035±.010
.182 MIN
.214 MIN
.182 MIN
.151 MIN
.151 MIN
GB511K-08
GN512H-08
LOCATE FR
GB511K-08
GN512H-08
LOCATE
GB511K-3-4(2)
GN512H-3(2)
(ON-3,-7)
.785±.010
.285±.010
GB511K-3-5 (5)
GN512H-3 (5)
(ON-3,-7)
.380±.010
(ZONE SH SH5) N .275±.010
N
.280±.010
2 EQUAL SPACES
LDW280-17614-18 NS
LDW280-17614-17 FS
(ON-3,-7)
.250±.010
.255±.010
GB511K-3-4
GN512H-3
(ON-3,-7)
.535±.010
.915±.010
MS20470DD5(10) (ON-3,-7)
MS20470DD4(24)(ON-3,-7)
MS20470DD4(28)(ON-3,-7)
MS20470DD4(32)(ON-3,-7)
.156 MIN
.188 MIN
.156 MIN
.125 MIN
.125 MIN
LDW280-17696-11 (ON-3,-7)
LDW280-17696-18 (ON-3,-7)
LDW280-17696-12 (ON-3,-7)
LDW280-17695-12(ON-3,-7)
LDW280-17695-12(ON-3,-7)
MS20470DD4(53) (ON-3,-7)
MS20470DD5(2) (ON-1,-5)
LDW280-17688-14 (ON-3,-7)
(ZONE 5G SH 5) V
V
-Y15.340(REF)
MS20470DD4(2)(ON-3,-7)
(MFD HD NEAR SIDE)
(SEE NOTE 10)
LDW280-23522(REF)
LDW280-17620-16 (ON-3,-7)
MS20470DD4(13) (ON-3,-7)
X191.218 (REF)
MS20470DD5(25) (ON-3,-7)
LDW280-17697-16 (ON-3,-7)
X184.587(REF)
X177.423(REF)
X170.276(REF)
X163.160(REF)
X156.075
LDW280M17111-3(REF)
LDW280-17620-16
LDW280-17697-16 LOCATION IN THIS AREA TO BE COORDINATED WITH LDW340-23750 INSTALLATION
LDW280-17126-23(REF)
(A3)
-Y5.371(REF)
PHOTO BUTT LINE
MS20470AD4 (78) (ON-3,-7)
LDW280
10 TO PHOTO BUTT LINE ON SH 3
TEMPLATE BUTT LINE
UPPER DECK REF PLANE X196.000(REF) (SEE NOTE 4)
LDW
LDW

01/03 NAS 9-1100

CODE IDENT NO. 26512
LDW280-52526 SH 4

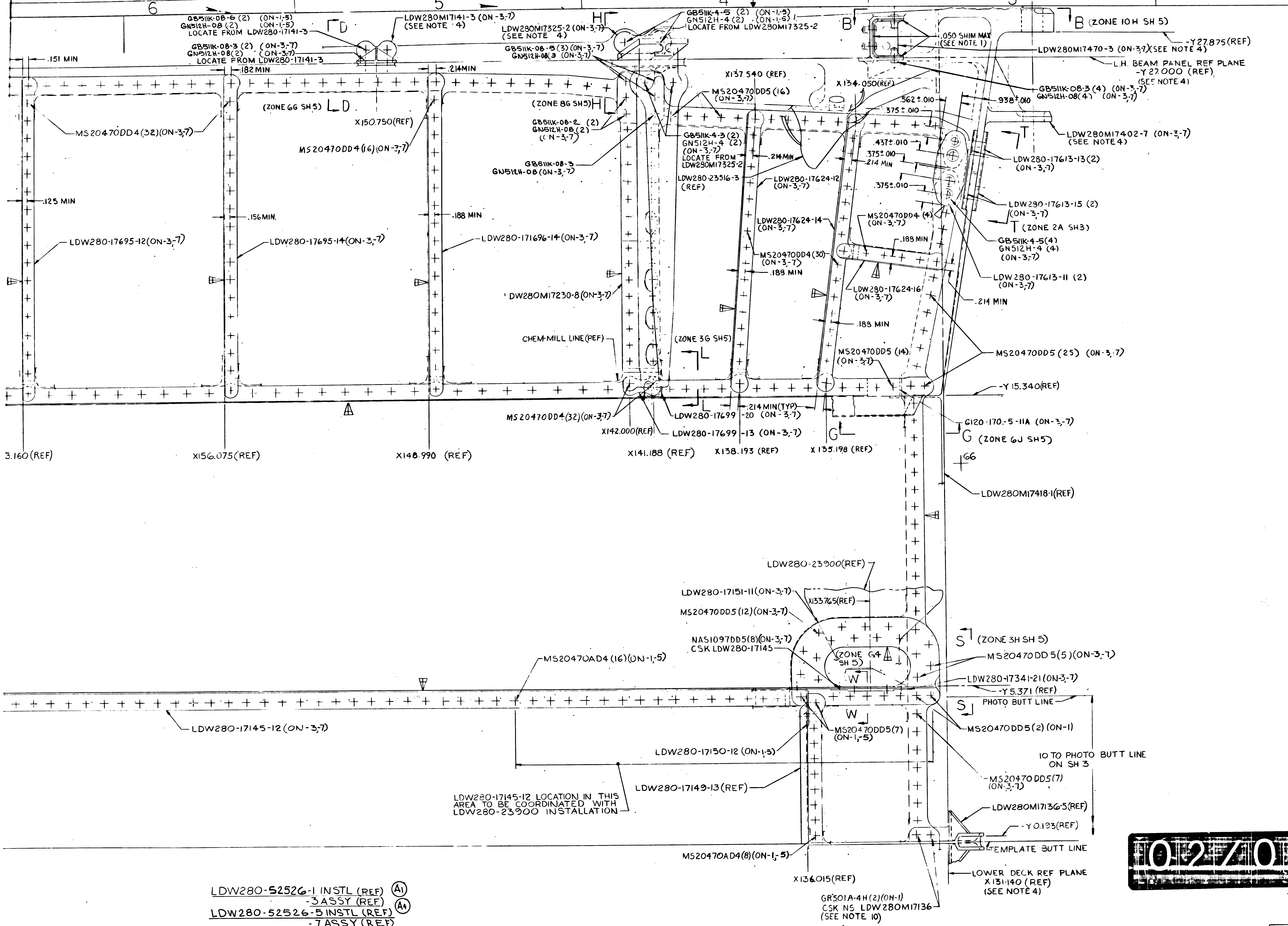
6
5
4
3
2
GB511K-08-6 (2) (ON-1,-5)
GN512H-08 (2) (ON-1,-5)
LOCATE FROM LDW280-17141-3
GB511K-08-3 (2) (ON-3,-7)
GN512H-08(2) (ON-3,-7)
LOCATE FROM LDW280-17141-3
D
LDW280M17141-3 (ON-3,-7)
(SEE NOTE 4)
H
LDW280M17325-2 (ON-3,-7)
(SEE NOTE 4)
GB511K-08-3 (3) (ON-3,-7)
GN512H-08(3 (ON-3,-7)
GB511K-4-5 (2) (ON-1,-5)
GN512H-4 (2) (ON-1,-5)
LOCATE FROM LDW280M17325-2
B
.050 SHIM MAX
(SEE NOTE 1)
B (ZONE 10H SH 5)
-Y27.875(REF)
LDW280M17470-3 (ON-3,-7)(SEE NOTE 4)
L.H. BEAM PANEL REF PLANE
-Y27.000 (REF)
(SEE NOTE 4)
GB511K-08-3 (4) (ON-3,-7)
GN512H-08(4) (ON-3,-7)
.151 MIN
.182 MIN
.214MIN
X137.540 (REF)
X134.050(REF)
MS20470DD5 (16)
(ON-3,-7)
(ZONE 6G SH 5) D
X150.750(REF)
(ZONE 8G SH5) H
MS20470DD4(32)(ON-3,-7)
MS20470DD4(16)(ON-3,-7)
GB511K-08-2 (2)
GN512H-08 (2)
(ON-3,-7)
GB511K-4-3 (2)
GN512H-4 (2)
(ON-3,-7)
LOCATE FROM
LDW280M17325-2
GB511K-08-3
GN512H-08 (ON-3,-7)
.214MIN
LDW280-23516-3
(REF)
LDW280-17624-12
(ON-3,-7)
.562±.010
.375±.010
.938±.010
LDW280M17402-7 (ON-3,-7)
(SEE NOTE 4)
T
.437±.010
.375±.010
.214 MIN
.375±.010
LDW280-17613-13(2)
(ON-3,-7)
LDW280-17613-15 (2)
(ON-3,-7)
T (ZONE 2A SH3)
MS20470DD4 (4)
(ON-3,-7)
.188 MIN
GB511K-4-5(4)
GN512H-4 (4)
(ON-3,-7)
LDW280-17613-11 (2)
(ON-3,-7)
.125 MIN
.156MIN.
.188 MIN
LDW280-17695-12(ON-3,-7)
LDW280-17695-14(ON-3,-7)
LDW280-171696-14(ON-3,-7)
LDW280-17624-14
(ON-3,-7)
MS20470DD4(30)
(ON-3,-7)
.188 MIN
LDW280-17624-16
(ON-3,-7)
.214 MIN
DW280M17230-8(ON-3,-7)
.188 MIN
CHEM-MILL LINE(REF)
(ZONE 3G SH5)
L
MS20470DD5 (14)
(ON-3,-7)
MS20470DD5 (25) (ON-3,-7)
-Y15.340(REF)
MS20470DD4(32)(ON-3,-7)
L
.214 MIN(TYP)
LDW280-17699 -20 (ON-3,-7)
X142.000(REF)
LDW280-17699 -13 (ON-3,-7)
G
G120-170-5-11A (ON-3,-7)
G (ZONE 6J SH5)
3.160(REF)
X156.075(REF)
X148.990 (REF)
X141.188 (REF)
X138.193 (REF)
X135.198 (REF)
66
LDW280M17418-1(REF)
LDW280-23900(REF)
LDW280-17151-11(ON-3,-7)
X133.765(REF)
MS20470DD5(12)(ON-3,-7)
NAS1097DD5(8)(ON-3,-7)
CSK LDW280-17145
(ZONE G4
SH 5)
W
S (ZONE 3H SH 5)
MS20470DD5(5)(ON-3,-7)
LDW280-17341-21(ON-3,-7)
-Y5.371 (REF)
MS20470AD4 (16)(ON-1,-5)
PHOTO BUTT LINE
S
W
MS20470DD5(7)
(ON-1,-5)
MS20470DD5(2)(ON-1)
LDW280-17145-12 (ON-3,-7)
LDW280-17150-12 (ON-1,-5)
10 TO PHOTO BUTT LINE
ON SH 3
MS20470DD5(7)
(ON-3,-7)
LDW280-17149-13(REF)
LDW280-17145-12 LOCATION IN THIS
AREA TO BE COORDINATED WITH
LDW280-23900 INSTALLATION
LDW280M17136-5(REF)
-Y0.193(REF)
TEMPLATE BUTT LINE
MS20470AD4(8)(ON-1,-5)
LOWER DECK REF PLANE
X131.140 (REF)
(SEE NOTE 4)
X136.015(REF)
GR501A-4H(2)(ON-1)
CSK NS LDW280M17136
(SEE NOTE 10)

LDW280-52526-1 INSTL (REF) (A1)
-3 ASSY (REF) (A4)
LDW280-52526-5 INSTL (REF)
-7 ASSY (REF)

02/03 NAS 9-1100

CODE IDENT NO. 26512
LDW280-52526 SH 4

CODE IDENT NO. 26512
LDW280-52526 SH 4

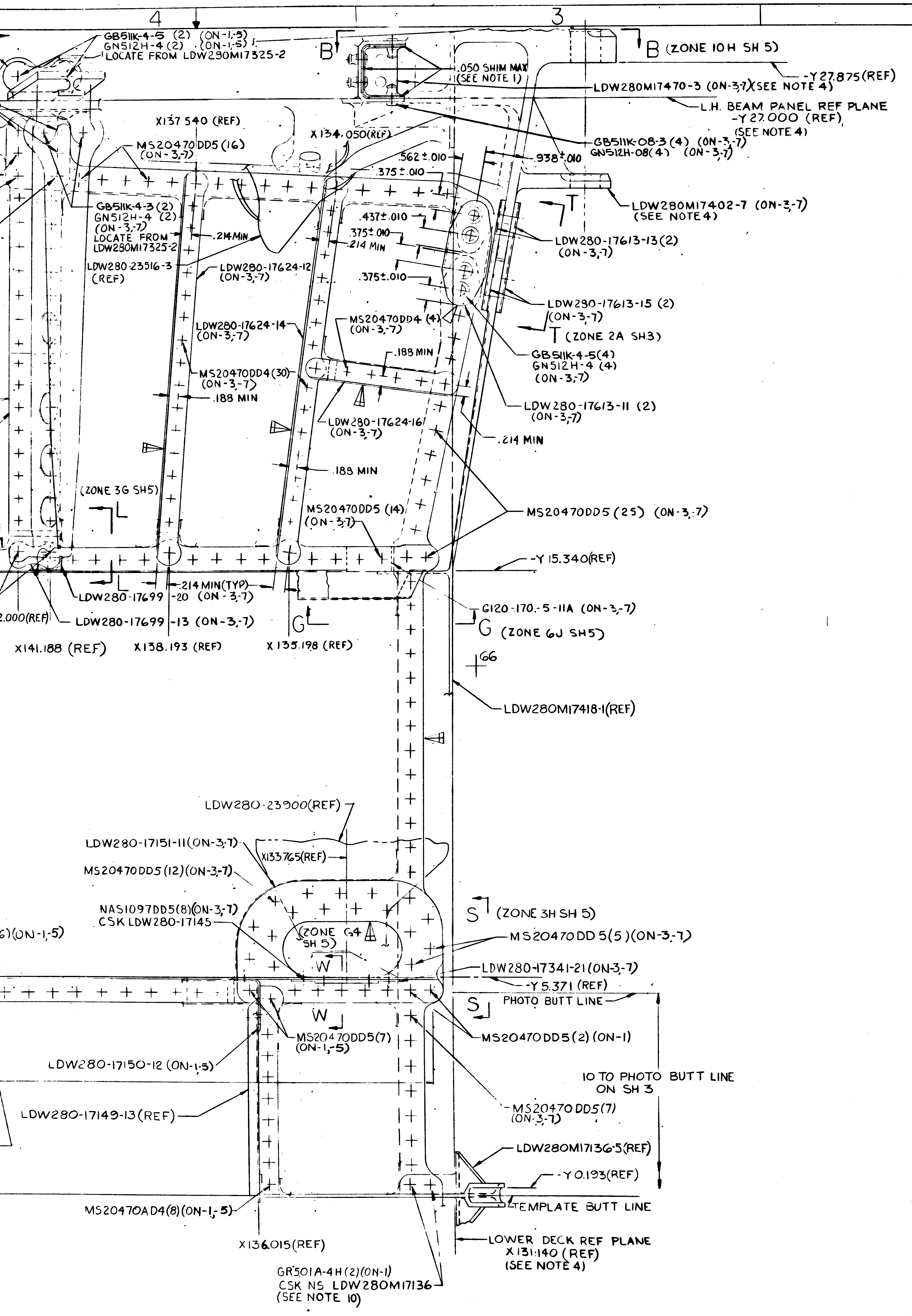
4
3
2
1
GB511K-4-5 (2) (ON-1,-5)
GN512H-4 (2) (ON-1,-5)
LOCATE FROM LDW280M17325-2
B
.050 SHIM MAX (SEE NOTE 1)
B (ZONE 10H SH 5)
-Y 27.875 (REF)
LDW280M17470-3 (ON-3,-7) (SEE NOTE 4)
L.H. BEAM PANEL REF PLANE -Y 27.000 (REF) (SEE NOTE 4)
X137.540 (REF)
X134.050 (REF)
MS20470DD5 (16) (ON-3,-7)
.562 ± .010
.375 ± .010
.938 ± .010
GB511K-08-3 (4) (ON-3,-7)
GN512H-08 (4) (ON-3,-7)
LDW280M17402-7 (ON-3,-7) (SEE NOTE 4)
T
GB511K-4-3 (2)
GN512H-4 (2) (ON-3,-7)
LOCATE FROM LDW280M17325-2
.214 MIN
.437 ± .010
.375 ± .010
.214 MIN
LDW280-17613-13 (2) (ON-3,-7)
LDW280-23516-3 (REF)
LDW280-17624-12 (ON-3,-7)
.375 ± .010
LDW280-17613-15 (2) (ON-3,-7)
T (ZONE 2A SH3)
LDW280-17624-14 (ON-3,-7)
MS20470DD4 (4) (ON-3,-7)
.188 MIN
GB511K-4-5 (4)
GN512H-4 (4) (ON-3,-7)
MS20470DD4 (30) (ON-3,-7)
.188 MIN
LDW280-17613-11 (2) (ON-3,-7)
LDW280-17624-16 (ON-3,-7)
.214 MIN
.188 MIN
(ZONE 3G SH5)
L
MS20470DD5 (14) (ON-3,-7)
MS20470DD5 (25) (ON-3,-7)
-Y 15.340 (REF)
.214 MIN (TYP)
LDW280-17699-20 (ON-3,-7)
LDW280-17699-13 (ON-3,-7)
G
G120-170-5-11A (ON-3,-7)
G (ZONE 6J SH5)
2.000 (REF)
X141.188 (REF)
X138.193 (REF)
X135.198 (REF)
66
LDW280M17418-1 (REF)
LDW280-23900 (REF)
LDW280-17151-11 (ON-3,-7)
X133.765 (REF)
MS20470DD5 (12) (ON-3,-7)
NAS1097DD5 (8) (ON-3,-7)
CSK LDW280-17145
(ZONE G4 SH 5)
S (ZONE 3H SH 5)
MS20470DD5 (5) (ON-3,-7)
(ON-1,-5)
W
LDW280-17341-21 (ON-3,-7)
-Y 5.371 (REF)
S
PHOTO BUTT LINE
W
MS20470DD5 (7) (ON-1,-5)
MS20470DD5 (2) (ON-1)
LDW280-17150-12 (ON-1,-5)
10 TO PHOTO BUTT LINE ON SH 3
LDW280-17149-13 (REF)
MS20470DD5 (7) (ON-3,-7)
LDW280M17136-5 (REF)
-Y 0.193 (REF)
MS20470AD4 (8) (ON-1,-5)
TEMPLATE BUTT LINE
X136.015 (REF)
LOWER DECK REF PLANE X131.140 (REF) (SEE NOTE 4)
GR501A-4H (2) (ON-1)
CSK NS LDW280M17136
(SEE NOTE 10)
90
30

MANUFACTURING OPERATIONS
UNLESS OTHERWISE SPECIFIED
NOTES CHECKED ✓ APPLY TO THIS DWG.

- PART NUMBER AND ALL OTHER MARKINGS IN REGION MARKED ☒ USE BOTH SIDES IF NECESSARY.
- FILLET AND INSIDE CORNER RADII TOLERANCES
  - .016R TO .062R ± .010
  - .063R TO .250R ± .015
  - OVER .250R ± .030
- DEPTH SHOWN FOR TAPPED HOLES IS FULL THDS. 2-3 IMP. THDS. BEYOND PERMISSIBLE
- EXTERNAL THREAD LENGTH SHOWN INCLUDES 2 IMPERFECT THREADS MAX.
- DO NOT CADMIUM PLATE & PAINT HOLES OR SURFACES MARKED WITH DOUBLE ASTERISK.
- MISMATCH STEP OF ± .005 PERMISSIBLE DUE TO CHANGE OF CUTTERS AT INSIDE INTERSECTING SURFACES.
- DIAMETERS MARKED MUST BE CONCENTRIC WITHIN FULL INDICATOR READING.
- HOLES MUST BE KEPT FREE OF CHROME PLATING SOLUTION.
- ALL DIMENSIONS SHOWN TO BE MET AFTER CADMIUM PLATING, THICKNESS OF PLATE .0003 MIN TO .0005 MAX MIN THICKNESS TO BE .0002 ON THREADED AREAS. NO ALLOWANCES FOR PLATING IN HOLES
- 125 SURFACE ROUGHNESS INCLUDING REAMED HOLES PER MIL-STD-10
- 200 FOR ALL DRILLED HOLES
- REMOVE ALL BURRS. BREAK ALL EDGES .015-.031
- INSPECTION INFORMATION MINIMUM PERMISSIBLE AVERAGE EDGE DISTANCE MARKED IS
- SYMBOL √ DENOTES SURFACE TO BE MACHINED
- UNLESS OTHERWISE SPECIFIED TOLERANCE ON FLANGES IS ± 1/32
- LENGTHS OF AN, NAS & MS AL ALY RIVETS SHORTER THAN 1 INCH ARE NOT SPECIFIED
- TOLERANCE ON LOFTED DELINEATIONS IS

DWG SIZE 34x 106
PRINTING INFO ONLY
FULL SIZE SHEET AREA (36x 108) = 27.0 SQ. FT.
¼ SIZE SHEET AREA (¼ OF FULL) = 6.75 SQ. FT.
PRINT TRIM LINE

F
E
LDW280-52526 B
LDW280-52526 B
D

03/03
NAS 9-1100

CODE IDENT NO. 26512	SH
LDW280-52526	4

GRUMMAN AIRCRAFT ENGRG CORP. BETHPAGE, L. I., NEW YORK

MODEL OR END ITEM	SIZE	CODE IDENT NO.		
LM	J	26512	LDW280-52526	B
	SCALE FULL		SHEET 4.00	

FOR PHOTO REPRODUCTION

THIS IS AN ORIGINAL DWG 3FRAMES

1-9-48

ENG 32.1 REV 3-66

*

GRUMMAN AIRCRAFT ENGINEERING CORP.
CODE IDENT NO. 26512
ENGINEERING ORDER

DWG. NO. LDW280-52526		EO NO. C/
CONTROL INFO NO. LDW280-A-3359		

THIS E.O. IS A REVISION OF E.O. A-6

ADD:
"REMOVE FROM -1 & -5"

WAS
"REMOVE FROM -1"

2

DETAIL SPEC REQ		CL II ENGRG CHG		CL I ENGRG CHG	

REASON FOR EO	DESCRIPTION OF EO	GAEC EO RELEASE
HARDWARE CALLED OUT ELSEWHERE	REFERENCE E.O. A-6 ADDED "REMOVE FROM -1 & -5." "WAS" REMOVE FROM -1"	VE 11/29

MODEL	EFFECTIVITY		
	PROCURING ACTIVITY NO.	GAEC UNIT NO.	SUB CONTR UNIT NO.
LM		LM2(32), LM3(33)	

DRAWING CHANGE REQD		DISPOSITION OF PARTS		APPROVED BY	JAS				KC WJH				
✓		NOT REQD		DATE	11/14/66				11/17/66			11-18-66	11/25/66
REVISE DWG	RECORD EO	REWORK	SCRAP	6	VDI	SUPPORT	RELIAB. GROUP	~~GROUP LEADER~~	STRESS GROUP	LIAISON ENGRG	PROJ ENGRG	~~GOVT~~	

PRIORITY	DRAWING TITLE	DRAWING NO.	EO NO.
C	BLKHD INSTL D/S FWD END	LDW280-52526	C/

ISSUED BY R.D. JEROME / J. STRAKOSCH. SECTION VEH. DES INT. GROUP NO. 335 PL 35

01 NAS 9-1100

ENG 32.2 REV 3-65

GRUMMAN AIRCRAFT ENGINEERING CORP.

CODE IDENT NO. 26512

ENGINEERING ORDER

NO. LEO 280

EO NO. 422

CONTROL INFO NO. LM 5-11469

IN F/D & B/M : REMOVE LDW280M17141-3 FROM THE FOLLOWING DWGS:

DNG. NO	* INSTL NO.	TITLE	EFF	CHG. NO.
LDW280 -28524	-5	BULKHD INSTL	LM 1 (31)	A 4
-52524	-1	D/S R.H	LM 2 (32)	C 1
-52524	-5		LM 3 (33)	
-54524	-1		LM 4 (34) THRU LM15 (45)	D1
-25525	-7		LM 1 (31)	D1
-52525	-1	BULKHD INSTL	LM 2 (32)	C 1
-52525	-5		LM 3 (33)	
-54525	-1	D/S L.H	LM 4 (34) THRU LM 6 (36)	C1
-25526	-7		LM 1 (31)	C 7
-52526	-1	BULKHD INSTL FWD D/S	LM 2 (32)	C 2
-52526	-5		LM 3 (33)	
-25527	-9		LM 1 (31)	D 1
-23527	-5	BULKHD INSTL	LM 2 (32)	D2
-23527	-9		LM 3 (33)	
-54527	-1	D/S AFT	LM 4 (34) THRU LM15 (45)	C-2

RELEASED BY LIAISON

SHOP NOTE ONLY: (DO NOT MICOP. ON DWG)
PLUG HOLES WITH MS20470DD

PRE-FEAT

REF LDW280-M17141

CONT # LM5-11468

DETAIL SPEC REQ		CL II ENGRG CHG	CL I ENGRG CHG

REASON FOR EO: ELIMINATION OF LANDING GEAR BUNGEE SUPT PER LCR 750

DESCRIPTION OF EO: ON * INSTL; REMOVED LDW280M17141-3

GAEC C EO RELEASE: 5

MODEL	PROCURING ACTIVITY NO.	GAEC UNIT NO.	SUB CONTR UNIT NO.
LM		NOTED	

DRAWING CHANGE REQD: REVISE DWG ✓ RECORD EO

DISPOSITION OF PARTS: REWORK ✓ SCRAP

APPROVED BY	WT			~	WB	CH		
DATE	12/19/66			~	4/5	12-19	12-29	12-19-66
6	VDI	UPPORT	RELIAB. GROUP	GROUP LEADER	STRESS GROUP	LIAISON ENGRG	PROJ ENGRG	~~GOVT~~

PRIORITY: C

DRAWING TITLE: NOTED

~~DRAWING NO.~~ LEO-280

EO NO. 422

ISSUED BY DON RAGAS X6454 SECTION VDI GROUP NO. 335 PL 5

01
NAS 9-1100

ENG 32.1 REV 3-65

B

GRUMMAN AIRCRAFT ENGINEERING CORP.
CODE IDENT NO. 26512
ENGINEERING ORDER

DWG. NO. LDW280-52526
EO NO. C3
CONTROL INFO NO. LDW280A7388

FOR -3 ASSY REPLACE LDW280-23516-3
WITH LDW280-23516-7

DETAIL SPEC REQ		CL II ENGRG CHG		CL I ENGRG CHG	✓	LCD-1629	5

REASON FOR EO	DESCRIPTION OF EO	GAEC EO RELEASE
UPPER OUTRIGGER STRUTS UNDERSTRENGTH AS MANUFACTURED	FOR -3 REPLACED LDW280-23516-3 WITH LDW280-23516-7	Ⓡ C JK 6/10/67

MODEL	EFFECTIVITY: PROCURING ACTIVITY NO.	GAEC UNIT NO.	SUB CONTR UNIT NO.	DRAWING CHANGE REQD: REVISE DWG	RECORD EO	DISPOSITION OF PARTS: REWORK	SCRAP
LM		LM-2(32)		✓		-3	

APPROVED BY			SUPPORT	RELIAB. GROUP	GROUP LEADER	STRESS GROUP	LIAISON ENGRG	PROJ ENGRG	~~GOVT~~
DATE					6/8/67	6/7/67		6/8/67	6/9/67
5									

PRIORITY	DRAWING TITLE	DRAWING NO.	EO NO.
C	BULKHEAD INSTL- DESCENT STAGE - FWD END	LDW280-52526	C3

ISSUED BY H. PALLMEYER / J. STRAKOSCH
SECTION VEH DES INT
GROUP NO. 335
PL 25

01
NAS 9-1100

ENG 32.1 REV 3-65

GRUMMAN AIRCRAFT ENGINEERING CORP.
CODE IDENT NO. 26512

ENGINEERING ORDER

DWG. NO. LEO 280
EO NO. 702
CONTROL INFO NO. LDW280 A 9004

ON DASH NO's * OF THE FOLLOWING DWGS,

a) IN B/M, ADD GT535AC-08B, GT535AC-16B, & GT535AC-32B TAPES, QTY EACH 'AS REQD'

b) IN F/D, ADD NOTE ☐: UPON COMPLETION OF BULKHEAD INSTL, ADD TAPE PER LPC 280-41

	DRAWING	TITLE	EFF	CHANGE
✓	LDW280-52524-1,-5	BULKHEAD INSTALLATION D/S-R.H. END	LEM-2(32)	C3
✓	-52525-1,-5	-L.H. END	AND	C3
✓	-52526-1,-5	-FWD END	LEM-3(33)	C4
	LDW280-23527-9	BULKHEAD INSTALLATION D/S-AFT END	LM-3(33)	D10

☐ USE NEXT AVAILABLE NOTE NUMBER

DETAIL SPEC REQ		CL II ENGRG CHG		CL I ENGRG CHG	✓	LCD 1997	5

REASON FOR EO: INCREASE CRACK RESISTANCE OF WEBS

DESCRIPTION OF EO: ON * IN B/M, ADDED GT535AC-08B, GT535AC-16B, & GT535AC-32B TAPES AS REQD. IN F/D, ADDED NOTE ☐

GAEC EO RELEASE: JK 9/7/7

MODEL	EFFECTIVITY: PROCURING ACTIVITY NO.	GAEC UNIT NO.	SUB CONTR UNIT NO.
LM		NOTED	

DRAWING CHANGE REQD: REVISE DWG	RECORD EO	DISPOSITION OF PARTS: REWORK	SCRAP
✓		✓	

APPROVED BY		SUPPORT	RELIAB. GROUP	GROUP LEADER	STRESS GROUP	LIAISON ENGRG	PROJ ENGRG	~~GOVT~~
DATE	8/31/67			8/31/67	9/1/67		9/1/67	
8/30/67	VDI							

PRIORITY: C
DRAWING TITLE: NOTED
DRAWING NO.: LEO 280
EO NO.: 702

1/8 ISSUED BY J. LANG / J. STRAKOSCH X1153 SECTION VDI GROUP NO. 335 PL 25

GRUMMAN AIRCRAFT ENGINEERING CORP.
CODE IDENT NO. 26512
ENGINEERING ORDER

ENG 32.1 REV 3-65

DWG NO. LEO 280 | EO NO. 1186
CONTROL INFO NO. LDW280 B5969

ON THE FOLLOWING INSTALLATION DRAWINGS
LDW280M17136-5-1 REPLACES LDW280M17136-5, EFF LM-3(33) THRU LM-15(45)
N/A AND QUANTITIES TO REMAIN THE SAME.

DWG. NO *	DASH NO	EFFECTIVITY	CHANGE LETTER	
LDW280-23527	-9	LM-3(33) LFM282	F2	✓
LDW280-52524	-5	LM-3(33) LFM282	C7	✓
LDW280-52525	-5	LM-3(33) LFM282	C6	✓
LDW280-52526	-5	LM-3(33) LFM282	C5	✓
LDW280-54524	-5, -21, -25, -29	LM-4(34) LFM282, LM-5(35) THRU LM-15(45)	G2	
LDW280-54525	-5, -21, -25, -29	LM-4(34) LFM282, LM-5(35) THRU LM-15(45)	G3	
LDW280-54526	-5, -21, -25, -29	LM-4(34) LFM282, LM-5(35) THRU LM-15(45)	G10	
LDW280-54527	-5, -21, -25, -29	LM-4(34) LFM282, LM-5(35) THRU LM-15(45)	F7	

LFM

(5)

DETAIL SPEC REQ ☐ | CL II ENGRG CHG ☐ | CL I ENGRG CHG ☑ | LCD 3537 PKG 1

REASON FOR EO: TO PROVIDE MULTIPOINT GROUNDING OF EXPLOSIVE DISCHARGE SHIELDS

DESCRIPTION OF EO: ON * LDW280M17136-5-1 REPLACED LDW280M17136-5

GAEC EO RELEASE: 10/24/68

MODEL	PROCURING ACTIVITY NO.	GAEC UNIT NO.	SUB CONTR UNIT NO.
LM		NOTED ABOVE	

DRAWING CHANGE REQD: REVISE DWG ✓ | RECORD EO

DISPOSITION OF PARTS: REWORK ✓ | SCRAP

APPROVED BY								
DATE	10/23/68			10/23/68	10/23/68		10/23/68	10-24-68
	VDI	SUPPORT	RELIAB. GROUP	GROUP LEADER	STRESS GROUP	LIAISON ENGRG	PROJ ENGRG	GOVT

PRIORITY: C

DRAWING TITLE: SEE DWG

DRAWING NO.: LE0280

EO NO.: 1186

CDR 102468
ISSUED BY J.CLARK/P.THORJUSEN x86046 SECTION VDI GROUP NO. 335 PL 25

01

NAS 9-1100

ENG 32.1 REV 3-65

GRUMMAN AIRCRAFT ENGINEERING CORP.
CODE IDENT NO. 26512
ENGINEERING ORDER

DWG. NO. LEO 280
EO NO. 1264
CONTROL INFO NO. LDW 280 B 6622

THIS LEO WITH EO# (**) CANCELS EO# (*)

DRAWING #	DASH#	TITLE	EFFECTIVITY	EO# (*)	EO# (**)
LDW280-23527	-9	SEE DRAWING	LM-3(33) LFM282	F2 ✓	F3
LDW280-52525	-5		LM-3(33) LFM282	C6 ✓	C7
LDW 280-52526	-5		LM-3(33) LFM282	C5 ✓	C6
LDW 280-54524	-5,-21,-25,-29		LM-4(34) THRU LM-15(45) LFM282	G2	G4
LDW 280-54525	-5,-21,-25,-29	SEE DRAWING		G3	G6

LFM

DETAIL SPEC REQ		CL II ENGRG CHG		CL I ENGRG CHG	✓	LCD 3537 PKG1 (5)

REASON FOR EO: LCD 3537 A CANCELLED PER LAV-10-504

DESCRIPTION OF EO: LEO WITH EO# (**) CANCELLED EO# (*)

GAEC EO RELEASE: JC 1/18/69

MODEL	EFFECTIVITY PROCURING ACTIVITY NO.	GAEC UNIT NO.	SUB CONTR UNIT NO.
LM		NOTED	
		ABOVE	

DRAWING CHANGE REQD: REVISE DWG ✓ ; RECORD EO
DISPOSITION OF PARTS: REWORK ; SCRAP ✓

APPROVED BY	JAS			GH PSF	W/H		[illegible]	Bauman
DATE	1/4/69			1/3/69	1/4/		1/4/69	1/18/69
	VDI	SUPPORT	RELIAB. GROUP	GROUP LEADER	STRESS GROUP	LIAISON ENGRG	PROJ ENGRG	~~GOVT~~

PRIORITY: C
DRAWING TITLE: SEE DRAWING
DRAWING NO.: LEO 280
EO NO.: 1264

12-23-68
ISSUED BY W. FOLTERMAN / P. THORJUSEN X86046 SECTION VDI GROUP NO. 335 PL 25

01

NAS 9-1100

LDW280-52528 A

MODEL OR END ITEM	NEXT ASSY	MODULE OR SER NO.	REQD PER MODULE OR END ITEM
PART NO.		GAEC SCH NO.	

MODEL OR END ITEM	NEXT ASSY	MODULE OR SER NO.	REQD PER MODULE OR END ITEM
PART NO.		GAEC SCH NO.	

LEM	LDW280-53510	LEM-3(33)	1
LEM	LDW280-52510	LEM-2(32)	1
MODEL OR END ITEM	NEXT ASSY	MODULE OR SER NO.	REQD PER MODULE OR END ITEM
PART NO. LDW280-52528-5		GAEC SCH NO. 51-3	

21

SH REV STATUS: FOR DESCRIPTION OF REV SEE SUBQ SH

SHEET	1.00	1.10	2.00	2.01	2.02		3.00	4.00	5.00
REV	A	A	A	A	A		A	A	A
SHEET									
REV									
SHEET									
REV									

LAST SECT LTR USED	R-R	GRUMMAN REL INFO		
		PRIM NO.	LE(001)	6-29-6
LAST DASH NO. USED	-5	207	WP	

UNLESS OTHERWISE SPECIFIED DIMENSIONS ARE IN INCHES.

TOLERANCE UNLESS SPECIFIED

FRACTIONS	DECIMALS	ANGLES
± 1/16	±.020	±1/2°

ORIG DWG AUTH

DETAIL SPEC REQUIREMENT	
CLASS II ENGRG CHANGE	
CLASS I ENGRG CHANGE	

CONTRACT NO. NAS 9-1100

LINE ITEM # 1

DOCUMENTATION TYPE II

DRAWN BY	F. HIPPLER 6-8-66 P. CARSTENSEN	RELIABILITY	
LAYOUT BY	G. BARNES		
CHECKED BY	D. FASS 6-16-66		
GROUP LEADER	6/18/66		
VEH. DES. INT			
STRUCTURES	6/28	PROJ ENGR	13 July
STRUCTURES	6/29	REL GROUP	7-14-66
WEIGHTS	7-12		

GRUMMAN AIRCRAFT ENGRG CORP
BETHPAGE, L. I., NEW YORK

BEAM PANEL INSTL
DESCENT STAGE ~ R.H. FORWARD

SIZE	CODE IDENT NO.		
B	26512	LDW280-52528	A
SCALE	NONE	SHEET 1.00 OF 8	

ENG 77.1 12-65

01 NAS 9-1100

REVISIONS

CHANGE LTR	ITEM NO.	SHEET NO.	ZONE	GRUMMAN INFO ONLY	DET SPEC	CLASS I	CLASS II	ENGRG ORDER	DESCRIPTION	EFFECTIVITY	DISPOSITION OF EXISTING PARTS REWORK	DISPOSITION OF EXISTING PARTS SCRAP	CHANGED BY AND DATE	ENGRG APPD	GOVT APPD
A	1	1.00							ON SH. 1.00 ADDED SHEETS 1.01, 8.00, 9.00 10.00, 11.00 SH. 1 OF 13 WAS 1 OF 8, ADDED IN M/B -3 INSTL	LM-2(32)	✓		J. CABALLERO 11/17/66		11-21-66
	2	3.00							ADDED NOTES 11, 12, 13, 14, 15 & 16, DELETED NOTES 6, 9 & 10						
	3	2.00 & 2.01						Ⓡ	ADDED -3 INSTL, QUANTITIES REQD FOR -1 & -3 INSTL, CLEANLINESS LEVEL FOR -1 & 3 INSTL., GT11FBR WAS GT11JBR & MS20995N32 WAS MS 20995F32, ADDED LDW280P16221-16 & LDW390-28015-1 DELETED GT11JBR-3-10, 73X MARKING FILM & EPON 919						

FOR CONTINUATION OF REVISIONS SEE SHEET ______

GRUMMAN AIRCRAFT ENGRG CORP, BETHPAGE, L. I., NEW YORK			
SIZE B	CODE IDENT NO. 26512	LDW280-52357	A
SCALE NONE		SHEET 1.01	

ENG 77.3 5-66

01

NAS 9-1100

REVISIONS FOR CONTINUATION OF REVISIONS SEE SHEET

CHANGE LTR	ITEM NO.	SHEET NO.	ZONE	GRUMMAN INFO ONLY	DET SPEC	CLASS I	CLASS II	ENGRG ORDER	DESCRIPTION	EFFECTIVITY	DISPOSITION OF EXISTING PARTS		CHANGED BY AND DATE	ENGRG APPD	GOVT APPD
											REWORK	SCRAP			
A	1	1.00, 1.10 2.01 & 3.00	6A 7A 7H				✓	EO A1	ADDED SHEET 1.10- ON-1: ADDED LDW280M17681-2, LDW280M17673-1 & MS20470AD4 (4) IN FLD OF DWG & B/M	LEM-2 LEM-3	✓		J. PAWLITZ 9-19-66		
	2	1.00, 1.10 2.00, 2.01 2.02, 3.00 4.00 & 5.00					✓	EO A2	REMOVED -1 & ADDED -5			-1 ASSY			
	3	1.00 2.02 3.00 4.00 & 5.00						Ⓡ	CHANGED COMMERCIAL CALLOUT TO G.A.E.C. VENDOR APPROVED EQUIVALENT. DELETED NOTE #7	NOT REQD	NOT	REQD RL			

CHG APPROVED

LTR	GROUP LDR	VEH DES INT	STRUCTURE	STRUCTURE	WEIGHTS	RELIABILITY	PROJ ENGR	REL GROUP			
A											

ENG 77.16 3-66

GRUMMAN AIRCRAFT ENGRG CORP., BETHPAGE, L. I., NEW YORK

SIZE	CODE IDENT NO.		
B	26512	LDW280-52528	A
SCALE	NONE	SHEET	1.10

01

NAS 9-1100

QTY PER ASSEMBLY							CODE IDENT	PART NO.	I&T	NOMENCLATURE OR DESCRIPTION	MATERIAL	GOVT SPEC	COML SPEC	STOCK SIZE	PROCESS SYM	FINISH NO.	ZONE
					-3	-5											
						2		LDW280-17608-23	E	SPLICE PLATE	SEE DWG						3A
						1		-21									3A
						1		-19									3A
						2		LDW280-17608-11									3A
						1		LDW280-17605-13									9A
						1		LDW280-17605-11									9A
						1		LDW280-17604-13									9F
						1		LDW 280-17604-11		SPLICE PLATE							9F
						1		LDW280-17454-15		STIFFENER							5A
					1			LDW280-17433-15		STIFFENER							6E
						1		LDW280-17400-11		TEE							5A
					1			LDW280-17369-15		STIFFENER							9A
					1			LDW280-17369-13									9A
					1			LDW280-17369-11									10A
					1			LDW280-17366-25									5A
					1			LDW 280-17366-23									5A
					3			LDW280-17366-21									5A
					1			LDW 280-17365-29									6A
					1			LDW 280-17365-27									7A
					1			LDW280-17365-25									7A
					2			LDW 280-17365-23									7A
					3			LDW 280-17365-21		STIFFENER							8A
					1			LDW280-17183-23		DOUBLER							3B
					1			LDW 280-17128-15		WEB							6B
					1			LDW280-25581-1		RELAY BOX INSTL							7E
					1			LDW280-52570-1		COLD RAIL INSTL	SEE DWG						6B
						1		LDW280-52528-3		BEAM PANEL ASSY					NONE	NONE	6A
								LDW280-52528-5	E	BEAM PANEL INSTL					NONE	NONE	6A

SYM OR NO.	PROCESS OR FINISH	GRUMMAN SPEC OR MILITARY SPEC	SYM OR NO.	PROCESS OR FINISH	GRUMMAN SPEC OR MILITARY SPEC	SYM OR NO.	PROCESS OR FINISH	GRUMMAN SPEC OR MILITARY SPEC

I & T: IDENTIFICATION AND TRACEABILITY IN ACCORDANCE WITH : NONE

GRUMMAN AIRCRAFT ENGRG CORP, BETHPAGE, L. I., NEW YORK

SIZE	CODE IDENT NO.		
B	26512	LDW280-52528	A
SCALE NONE		SHEET 2.00	

ENG 77.2 7-65

01

NAS 9-1100

QTY PER ASSEMBLY -3	-5	CODE IDENT	PART NO.	I&T	NOMENCLATURE OR DESCRIPTION	MATERIAL	GOVT SPEC	COML SPEC	STOCK SIZE	PROCESS SYM	FINISH NO.	ZONE
	1		LDW280M17681-2	E	FITTING	SEE DWG						5A
	1		LDW280M17673-1		FITTING							7A
	1		LDW280M17420-1		FITTING							3F
	1		LDW280M17416-4		CAPSTRIP							3B
	1		LDW280M17342-3		TEE							4B
	1		LDW280M17247-7		DOWN LOCK FITTING							4B
	1		LDW280M17109-6		CAPSTRIP							10B
1			LDW280-17830-19		ANGLE							9B
1			LDW280-17830-15		ANGLE							4B
1			LDW280-17830-13		ZEE							4B
1			LDW280-17664-21		STIFFENER							4B
1			-20									4C
1			-19									4C
1			-17									4E
1			-14									6B
1			LDW280-17664-13		STIFFENER							4D
	1		LDW280-17662-15		ANGLE							3B
	2		LDW280-17619-11		SPLICE PLATE							9F
	1		LDW280-17612-17		SPLICE PLATE							3F
	1		LDW280-17612-15	E	SPLICE PLATE	SEE DWG						3F

SYM OR NO.	PROCESS OR FINISH	GRUMMAN SPEC OR MILITARY SPEC	SYM OR NO.	PROCESS OR FINISH	GRUMMAN SPEC OR MILITARY SPEC	SYM OR NO.	PROCESS OR FINISH	GRUMMAN SPEC OR MILITARY SPEC

I & T: IDENTIFICATION AND TRACEABILITY IN ACCORDANCE WITH : NONE

GRUMMAN AIRCRAFT ENGRG CORP, BETHPAGE, L. I., NEW YORK

SIZE B
CODE IDENT NO. 26512
LDW280-52528
A

SCALE NONE
SHEET 2.01

ENG 77.2 7-65

01

NAS 9-1100

QTY PER ASSEMBLY -3	QTY PER ASSEMBLY -5	CODE IDENT	PART NO.	I&T	NOMENCLATURE OR DESCRIPTION	MATERIAL	GOVT SPEC	COML SPEC	STOCK SIZE	PROCESS SYM	FINISH NO.	ZONE
			NAS1097DD5	E	RIVET	STD PART						
			MS20470AD4									
			MS20470DD6									
			MS20470DD5									
			MS20470DD4									
			MS20426DD4		RIVET	STD PART						
	4		GB511K-5-9		BOLT	GRUMMAN STD						
	2		GB511K-5-5									
	2		GB511K-5-4									
	6		GB511K-4 8									
	6		GB511K-4-6									
	10		GB511K-4-5									
	4		GB511K-3-7									
	8		GB511K-3-5									
	4		GB511K-08-4									
	7		GB511K-08-3									
	2		GB511K-08-2		BOLT							
3			GR500A-4E		RIVET							
33			GR500A-4C		RIVET							
	13		GN512H-08		COLLAR							
	8		GN512H-5		COLLAR							
	22		GN512H-4		COLLAR							
	12		GN512H-3	E	COLLAR	GRUMMAN STD						

SYM OR NO.	PROCESS OR FINISH	GRUMMAN SPEC OR MILITARY SPEC	SYM OR NO.	PROCESS OR FINISH	GRUMMAN SPEC OR MILITARY SPEC	SYM OR NO.	PROCESS OR FINISH	GRUMMAN SPEC OR MILITARY SPEC

I & T: IDENTIFICATION AND TRACEABILITY IN ACCORDANCE WITH : NONE

GRUMMAN AIRCRAFT ENGRG CORP, BETHPAGE, L. I., NEW YORK

SIZE	CODE IDENT NO.		
B	26512	LDW280-52528	A

SCALE NONE

SHEET 2.02

ENG 77.2 7-65

'01

NAS 9-1100

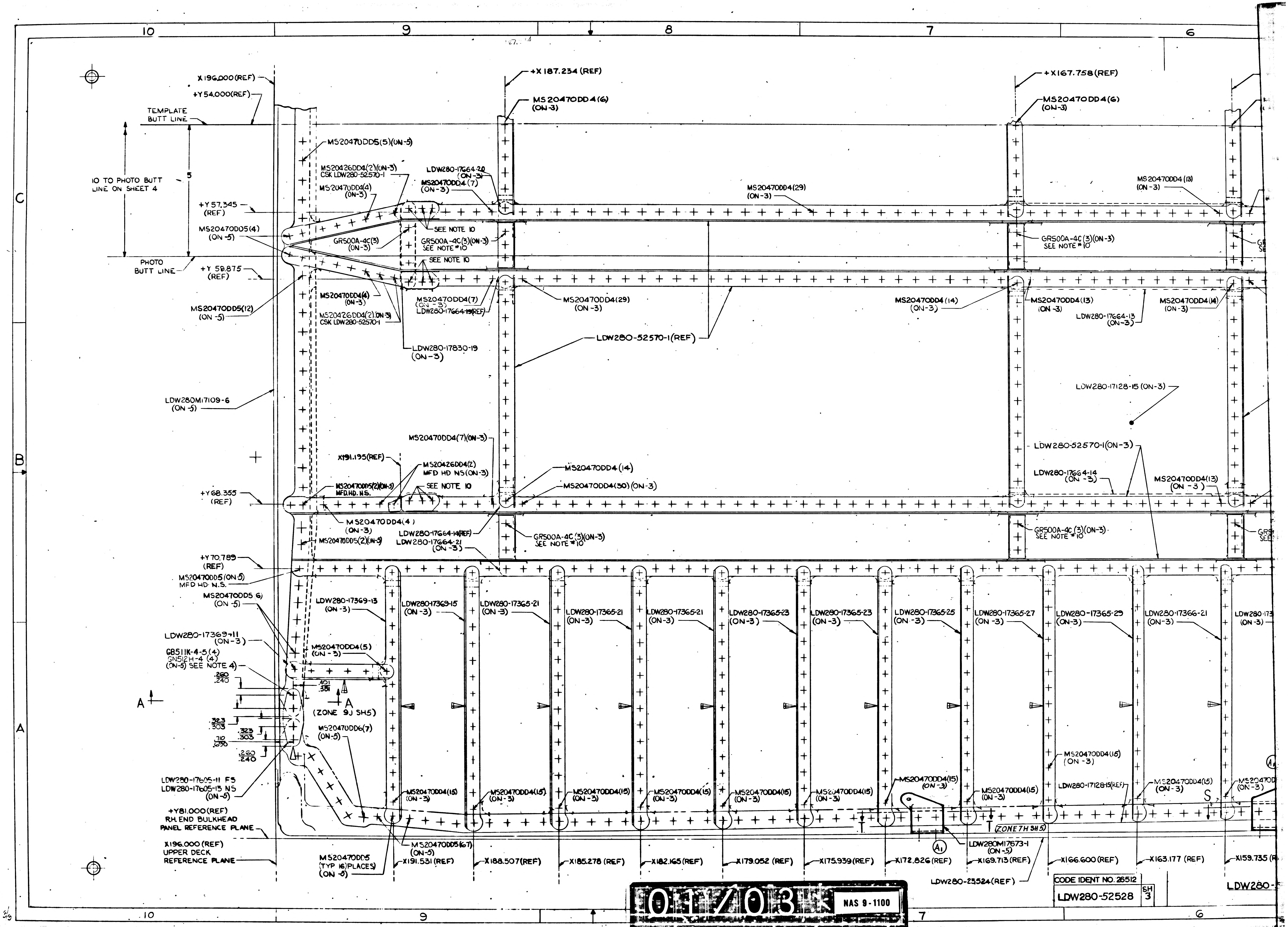
10
9
8
7
6
X196.000(REF)
+Y54.000(REF)
TEMPLATE BUTT LINE
10 TO PHOTO BUTT LINE ON SHEET 4
5
PHOTO BUTT LINE
+Y57.345 (REF)
+Y59.875 (REF)
+Y68.355 (REF)
+Y70.789 (REF)
+X187.234 (REF)
+X167.758 (REF)
MS20470DD4(6) (ON-3)
MS20470DD5(5)(ON-5)
MS20426DD4(2)(ON-3) CSK LDW280-52570-1
MS20470DD4(4) (ON-5)
LDW280-17664-20 (ON-3)
MS20470DD4(7) (ON-3)
MS20470DD4(29) (ON-3)
MS20470DD4(13) (ON-3)
MS20470DD5(4) (ON-5)
GR500A-4C(3) (ON-3)
SEE NOTE 10
GR500A-4C(3)(ON-3) SEE NOTE *10
MS20470DD5(12) (ON-5)
MS20470DD4(4) (ON-3)
MS20426DD4(2)(ON-3) CSK LDW280-52570-1
MS20470DD4(7) (ON-3) LDW280-17664-19(REF)
LDW280-17830-19 (ON-3)
LDW280-52570-1(REF)
MS20470DD4(14) (ON-3)
LDW280-17664-13 (ON-3)
LDW280-17128-15 (ON-3)
LDW280M17109-6 (ON-5)
MS20470DD4(7)(ON-3)
X191.195(REF)
MS20426DD4(2) MFD HD NS(ON-3)
MS20470DD4(14)
MS20470DD4(30)(ON-3)
MS20470DD5(2)(ON-5) MFD.HD.N.S.
LDW280-52570-1(ON-3)
LDW280-17664-14 (ON-3)
MS20470DD4(4) (ON-3)
MS20470DD5(2)(ON-5)
LDW280-17664-14(REF)
LDW280-17664-21 (ON-3)
MS20470DD5(ON-5) MFD HD N.S.
MS20470DD5(6) (ON-5)
LDW280-17369-13 (ON-3)
LDW280-17369-15 (ON-3)
LDW280-17365-21 (ON-3)
LDW280-17365-23 (ON-3)
LDW280-17365-25 (ON-3)
LDW280-17365-27 (ON-3)
LDW280-17365-29 (ON-3)
LDW280-17366-21 (ON-3)
LDW280-17369-11 (ON-3)
GB511K-4-5(4) GN512H-4(4) (ON-5) SEE NOTE 4
MS20470DD4(5) (ON-5)
.260 .240
.401 .381
A
(ZONE 9J SH5)
.323 .303
.710 .690
MS20470DD6(7) (ON-5)
LDW280-17605-11 FS
LDW280-17605-13 NS (ON-5)
+Y81.000(REF) RH. END BULKHEAD PANEL REFERENCE PLANE
X196.000(REF) UPPER DECK REFERENCE PLANE
MS20470DD5 (TYP 16 PLACES) (ON-5)
MS20470DD5(67) (ON-5)
MS20470DD4(15) (ON-3)
LDW280-17128-15(REF)
S
A1
ZONE 7H SH5
LDW280M17673-1 (ON-5)
LDW280-23524(REF)
X191.531(REF)
X188.507(REF)
X185.278(REF)
X182.165(REF)
X179.052(REF)
X175.939(REF)
X172.826(REF)
X169.713(REF)
X166.600(REF)
X163.177(REF)
X159.735(REF)
C
B
A
CODE IDENT NO. 26512
LDW280-52528
SH 3

01/03 NAS 9-1100

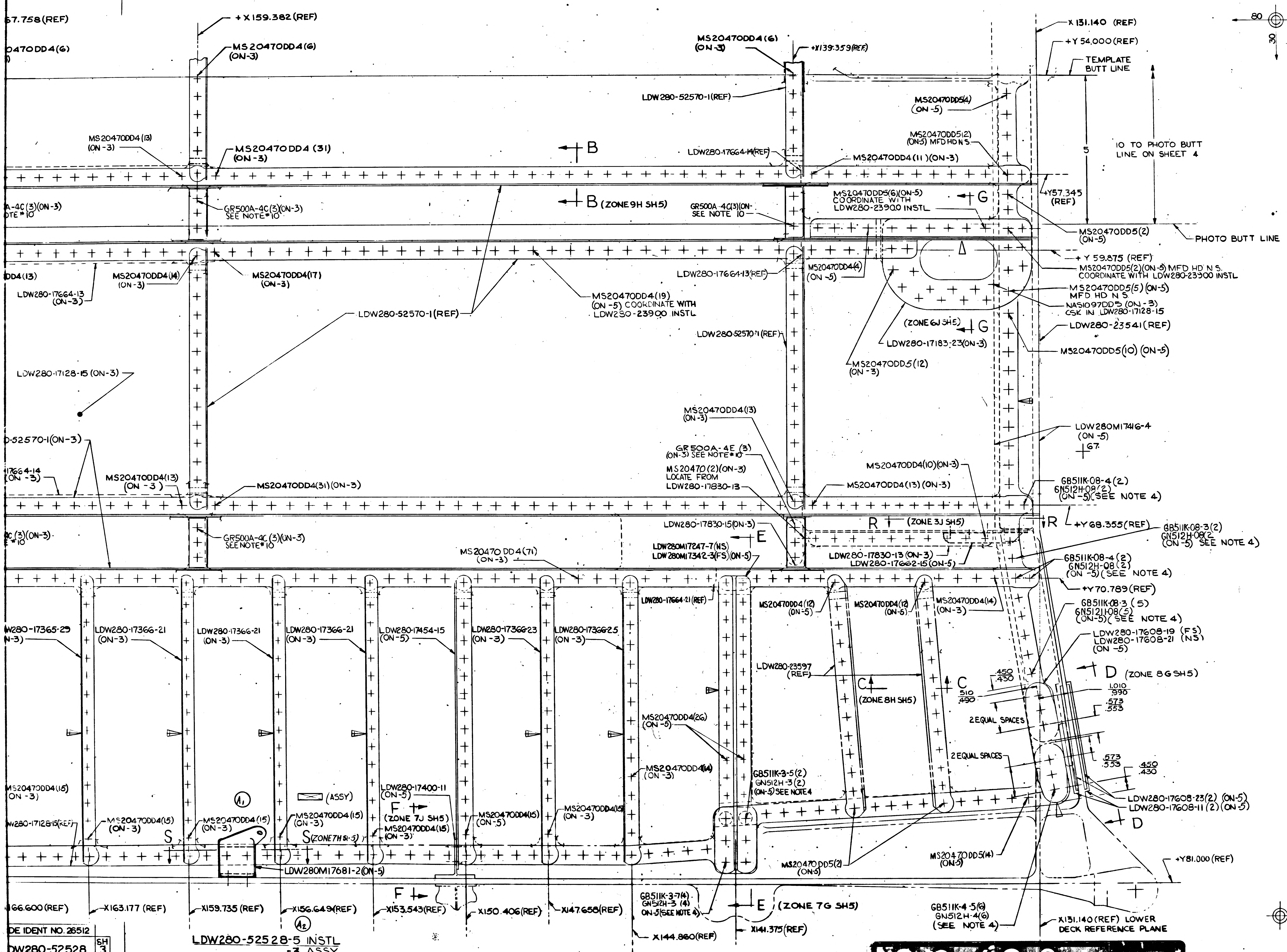
6
5
4
3
2
67.758(REF)
0470DD4(6)
+X159.382 (REF)
MS20470DD4(6) (ON-3)
MS20470DD4(13) (ON-3)
MS20470DD4 (31) (ON-3)
A-4C(3)(ON-3) OTE*10
GR500A-4C(3)(ON-3) SEE NOTE*10
B
B (ZONE 9H SH5)
DD4(13)
LDW280-17664-13 (ON-3)
MS20470DD4(14) (ON-3)
MS20470DD4(17) (ON-3)
MS20470DD4(19) (ON-5) COORDINATE WITH LDW280-23900 INSTL
LDW280-52570-1(REF)
LDW280-17128-15 (ON-3)
0-52570-1(ON-3)
17664-14 (ON-3)
MS20470DD4(13) (ON-3)
MS20470DD4(31)(ON-3)
4C(3)(ON-3) *10
GR500A-4C (3)(ON-3) SEE NOTE*10
MS20470 DD4(71) (ON-3)
MS20470DD4(6) (ON-3)
+X139.359(REF)
LDW280-52570-1(REF)
LDW280-17664-14(REF)
MS20470DD4(11)(ON-3)
GR500A-4C(3)(ON- SEE NOTE 10
MS20470DD5(6)(ON-5) COORDINATE WITH LDW280-23900 INSTL
G
MS20470DD5(4) (ON-5)
MS20470DD5(2) (ON-5) MFD HD N S
X131.140 (REF)
+Y54.000(REF)
TEMPLATE BUTT LINE
5
10 TO PHOTO BUTT LINE ON SHEET 4
+Y57.345 (REF)
MS20470DD5(2) (ON-5)
PHOTO BUTT LINE
80
30
LDW280-17664-13(REF)
MS20470DD4(4) (ON-5)
+Y59.875 (REF)
MS20470DD5(2)(ON-5) MFD HD N S. COORDINATE WITH LDW280-23900 INSTL
MS20470DD5(5)(ON-5) MFD HD N S
NAS1097DD5 (ON-3) CSK IN LDW280-17128-15
(ZONE 6J SH5)
G
LDW280-17183-23(ON-3)
LDW280-23541(REF)
MS20470DD5(10) (ON-5)
MS20470DD5(12) (ON-3)
LDW280-52570-1(REF)
MS20470DD4(13) (ON-3)
GR500A-4E (3) (ON-3) SEE NOTE*10
MS20470(2)(ON-3) LOCATE FROM LDW280-17830-13
MS20470DD4(13) (ON-3)
MS20470DD4(10)(ON-3)
LDW280M17416-4 (ON-5)
67
GB511K-08-4(2) GN512H-08(2) (ON-5)(SEE NOTE 4)
R
R (ZONE 3J SH5)
+Y68.355(REF)
GB511K-08-3(2) GN512H-08(2 (ON-5) SEE NOTE 4)
LDW280-17830-15(ON-3)
E
LDW280M17247-7(NS) LDW280M17342-3(FS)(ON-5)
LDW280-17830-13 (ON-3)
LDW280-17662-15(ON-5)
GB511K-08-4(2) GN512H-08(2) (ON-5)(SEE NOTE 4)
+Y70.789(REF)
LDW280-17664-21(REF)
MS20470DD4(12) (ON-5)
MS20470DD4(12) (ON-5)
MS20470DD4(14) (ON-3)
GB511K-08-3 (5) GN51211-08(5) (ON-5)(SEE NOTE 4)
LDW280-17608-19 (FS) LDW280-17608-21 (NS) (ON-5)
W280-17365-29 (ON-3)
LDW280-17366-21 (ON-3)
LDW280-17366-21 (ON-3)
LDW280-17366-21 (ON-3)
LDW280-17454-15 (ON-5)
LDW280-17366-23 (ON-3)
LDW280-17366-25 (ON-3)
LDW280-23597 (REF)
C
C (ZONE 8H SH5)
.450 .430
.510 .490
D (ZONE 8G SH5)
1.010 .990
.573 .553
2 EQUAL SPACES
2 EQUAL SPACES
.573 .553
.450 .430
MS20470DD4(26) (ON-5)
MS20470DD4(14) (ON-3)
GB511K-3-5(2) GN512H-3(2) (ON-5) SEE NOTE 4
LDW280-17608-23(2) (ON-5)
LDW280-17608-11(2) (ON-5)
D
MS20470DD4(15) (ON-3)
W280-17128-15(REF)
MS20470DD4(15) (ON-3)
MS20470DD4(15) (ON-3)
A1
(ASSY)
LDW280-17400-11 (ON-5)
F
(ZONE 7J SH5)
MS20470DD4(15) (ON-3)
MS20470DD4(15) (ON-3)
MS20470DD4(15) (ON-5)
MS20470DD4(15) (ON-3)
S
S (ZONE 7H SH5)
LDW280M17681-2(ON-5)
MS20470DD5(2) (ON-5)
MS20470DD5(14) (ON-5)
+Y81.000 (REF)
F
166.600 (REF)
X163.177 (REF)
X159.735 (REF)
X156.649(REF)
X153.543(REF)
X150.406(REF)
X147.658(REF)
GB511K-3-7(4) GN512H-3 (4) ON-5(SEE NOTE 4)
E (ZONE 7G SH5)
GB511K-4-5(6) GN512H-4(6) (SEE NOTE 4)
X131.140(REF) LOWER DECK REFERENCE PLANE
X144.860(REF)
X141.375(REF)
A2

NOTES
1. TOLERANCE ON LINES MARKED ◁ TO BE ±1/64
2. TOLERANCE ON LINES MARKED ◁ TO BE ±1/32
3. TOLERANCE ON LOFTED LOCATION OF FASTENERS THRU LDW280-17128-15 TO BE ±1/32. OTHERS TO BE LOCATED FROM PILOT HOLES IN DETAIL PARTS
4. INSTALL FASTENERS PER LSP-14-15302, LSP14-1530 & LSP14-15306.
5. NO TOOLING HOLES PERMITTED IN PARTS.
6. FASTENER MANUFACTURED HEAD (OTHER THAN C'SK ATTACHMENTS) TO BE ON WEB SIDE UNLESS OTHERWISE SPECIFIED.
~~7. HI-LOK PINS AND COLLARS TO BE IN ACCORDANCE WITH APPLICABLE PORTIONS OF MIL-N-25027AND~~
8. PERMISSIBLE OIL CAN DEPTH OF WEBS BET STIFFENERS IS ±.100.
9. FOR BASIC JIG DATA SEE LDW280-23511
10. INSTALL RIVETS WET & OVERCOAT RIVET SHOP HE WITH EPON 919 PER LSP 14-14102.

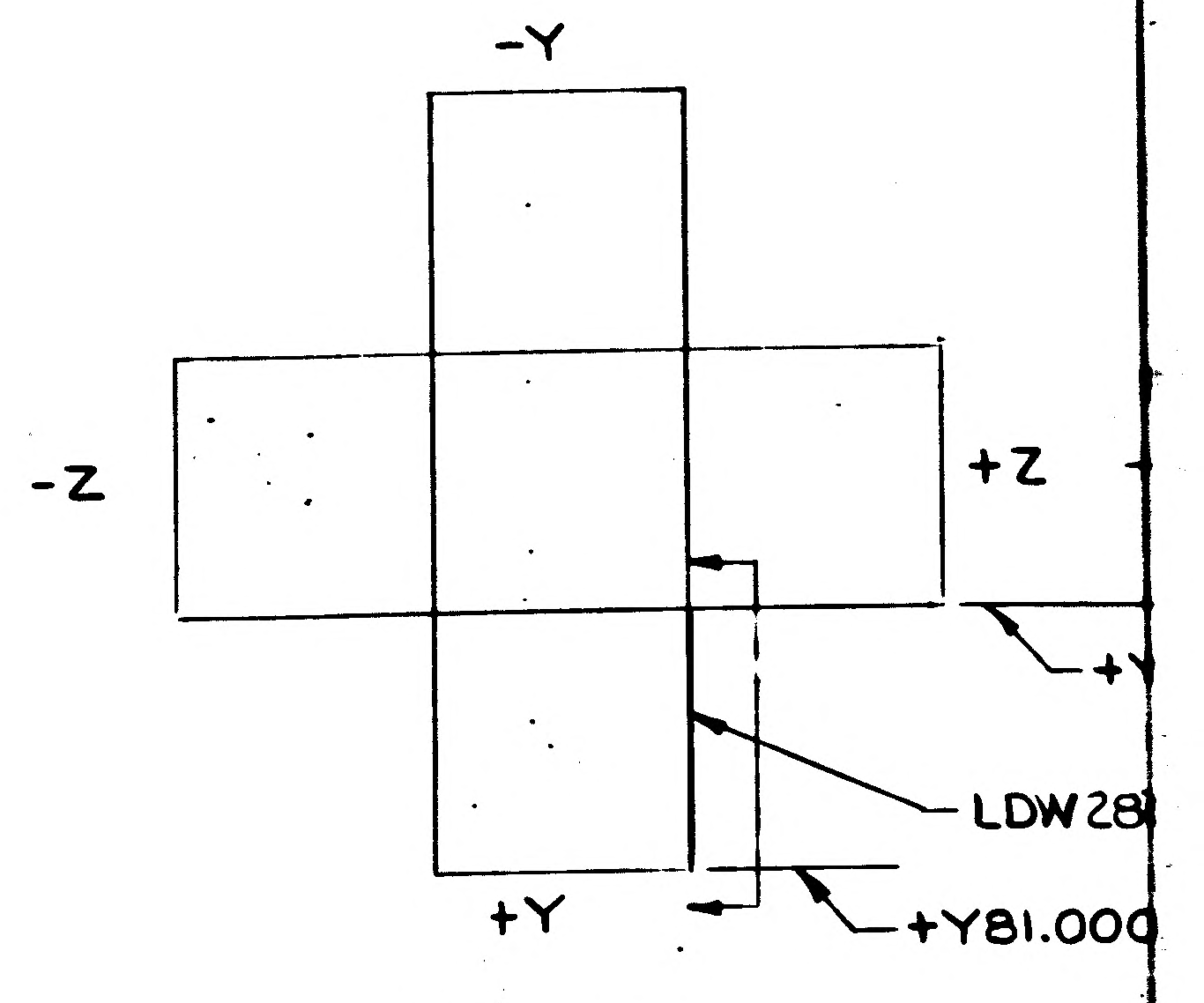
-Y
-Z
+Z
+Y
LDW28
+Y81.00

PLAN VIEW
FOR ENGRG REFERENCE ONLY

DE IDENT NO. 26512
DW280-52528 SH 3

LDW280-52528-5 INSTL
-3 ASSY

02/03
NAS 9-1100

CODE IDENT NO. 26512
LDW280-52528 SH 3

4 3 2 1

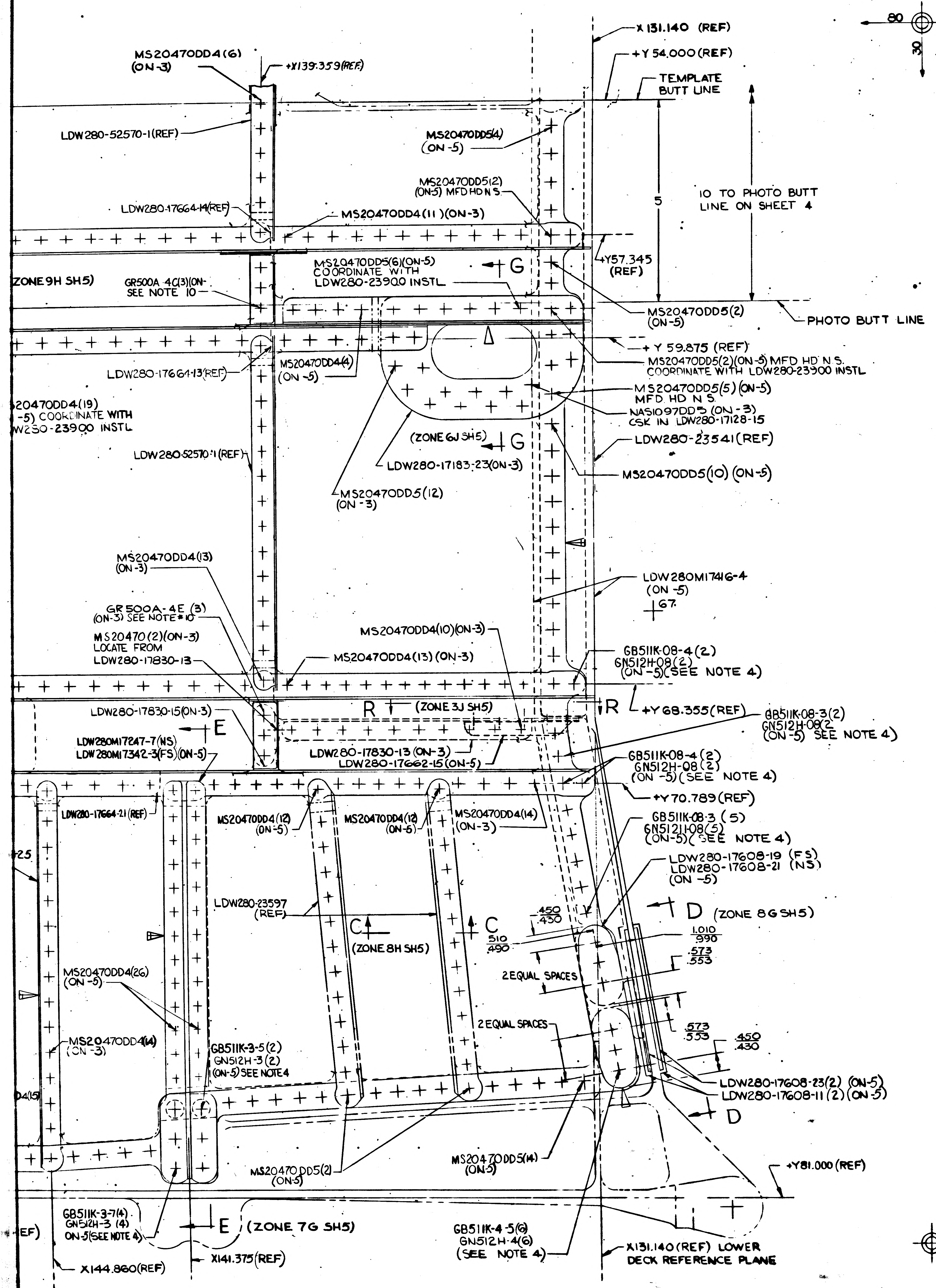

MS20470DD4(6) (ON-3)
+X139.359(REF)
X 131.140 (REF)
+Y 54.000 (REF)
TEMPLATE BUTT LINE
80
30
LDW280-52570-1(REF)
MS20470DD5(4) (ON-5)
MS20470DD5(2) (ON-5) MFD HD N S.
10 TO PHOTO BUTT LINE ON SHEET 4
5
LDW280-17664-14(REF)
MS20470DD4(11)(ON-3)
+Y57.345 (REF)
MS20470DD5(6)(ON-5) COORDINATE WITH LDW280-23900 INSTL
G
(ZONE 9H SH5)
GR500A 4C(3)(ON- SEE NOTE 10
MS20470DD5(2) (ON-5)
PHOTO BUTT LINE
+Y 59.875 (REF)
LDW280-17664-13(REF)
MS20470DD4(4) (ON-5)
MS20470DD5(2)(ON-5) MFD HD N S. COORDINATE WITH LDW280-23900 INSTL
MS20470DD5(5) (ON-5) MFD HD N S
NAS1097DD5 (ON-3) CSK IN LDW280-17128-15
20470DD4(19) -5) COORDINATE WITH W280-23900 INSTL
(ZONE 6J SH5)
G
LDW280-23541(REF)
LDW280-52570-1(REF)
LDW280-17183-23(ON-3)
MS20470DD5(10) (ON-5)
MS20470DD5(12) (ON-3)
MS20470DD4(13) (ON-3)
LDW280M17416-4 (ON-5)
67
GR500A-4E (3) (ON-3) SEE NOTE #10
MS20470DD4(10)(ON-3)
MS20470(2)(ON-3) LOCATE FROM LDW280-17830-13
MS20470DD4(13) (ON-3)
GB511K-08-4(2) GN512H-08(2) (ON-5)(SEE NOTE 4)
LDW280-17830-15(ON-3)
R
(ZONE 3J SH5)
R
+Y 68.355(REF)
GB511K-08-3(2) GN512H-08(2 (ON-5) SEE NOTE 4)
E
LDW280M17247-7(NS)
LDW280M17342-3(FS)(ON-5)
LDW280-17830-13 (ON-3)
LDW280-17662-15(ON-5)
GB511K-08-4(2) GN512H-08(2) (ON-5)(SEE NOTE 4)
+Y70.789(REF)
LDW280-17664-21(REF)
MS20470DD4(12) (ON-5)
MS20470DD4(12) (ON-5)
MS20470DD4(14) (ON-3)
GB511K-08-3 (5) GN51211-08(5) (ON-5)(SEE NOTE 4)
25
LDW280-17608-19 (FS) LDW280-17608-21 (NS) (ON-5)
LDW280-23597 (REF)
C
C
D (ZONE 8G SH5)
(ZONE 8H SH5)
.450 .430
510 490
1.010 .990
.573 .553
2 EQUAL SPACES
MS20470DD4(26) (ON-5)
2 EQUAL SPACES
.573 .553
.450 .430
MS20470DD4(14) (ON-3)
GB511K-3-5(2) GN512H-3(2) (ON-5) SEE NOTE 4
LDW280-17608-23(2) (ON-5)
LDW280-17608-11(2) (ON-5)
D4(15)
D
MS20470DD5(2) (ON-5)
MS20470DD5(14) (ON-5)
+Y81.000(REF)
GB511K-3-7(4) GN512H-3 (4) ON-5(SEE NOTE 4)
E (ZONE 7G SH5)
GB511K-4-5(6) GN512H-4(6) (SEE NOTE 4)
X131.140(REF) LOWER DECK REFERENCE PLANE
EF)
X144.860(REF)
X141.375(REF)

NOTES

1. TOLERANCE ON LINES MARKED ◁ TO BE ±1/64
2. TOLERANCE ON LINES MARKED ◁ TO BE ±1/32
3. TOLERANCE ON LOFTED LOCATION OF FASTENERS THRU LDW280-17128-15 TO BE ±1/32. OTHERS TO BE LOCATED FROM PILOT HOLES IN DETAIL PARTS
4. INSTALL FASTENERS PER LSP-14-15302, LSP14-15303 & LSP14-15306.
5. NO TOOLING HOLES PERMITTED IN PARTS.
6. FASTENER MANUFACTURED HEAD (OTHER THAN C'SK ATTACHMENTS) TO BE ON WEB SIDE UNLESS OTHERWISE SPECIFIED.
~~7. HI-LOK PINS AND COLLARS TO BE IN ACCORDANCE WITH APPLICABLE PORTIONS OF MIL-N-25027 AND NAS 498.~~
8. PERMISSIBLE OIL CAN DEPTH OF WEBS BETWEEN STIFFENERS IS ±.100.
9. FOR BASIC JIG DATA SEE LDW280-23511
10. INSTALL RIVETS WET & OVERCOAT RIVET SHOP HEADS WITH EPON 919 PER LSP 14-14102.

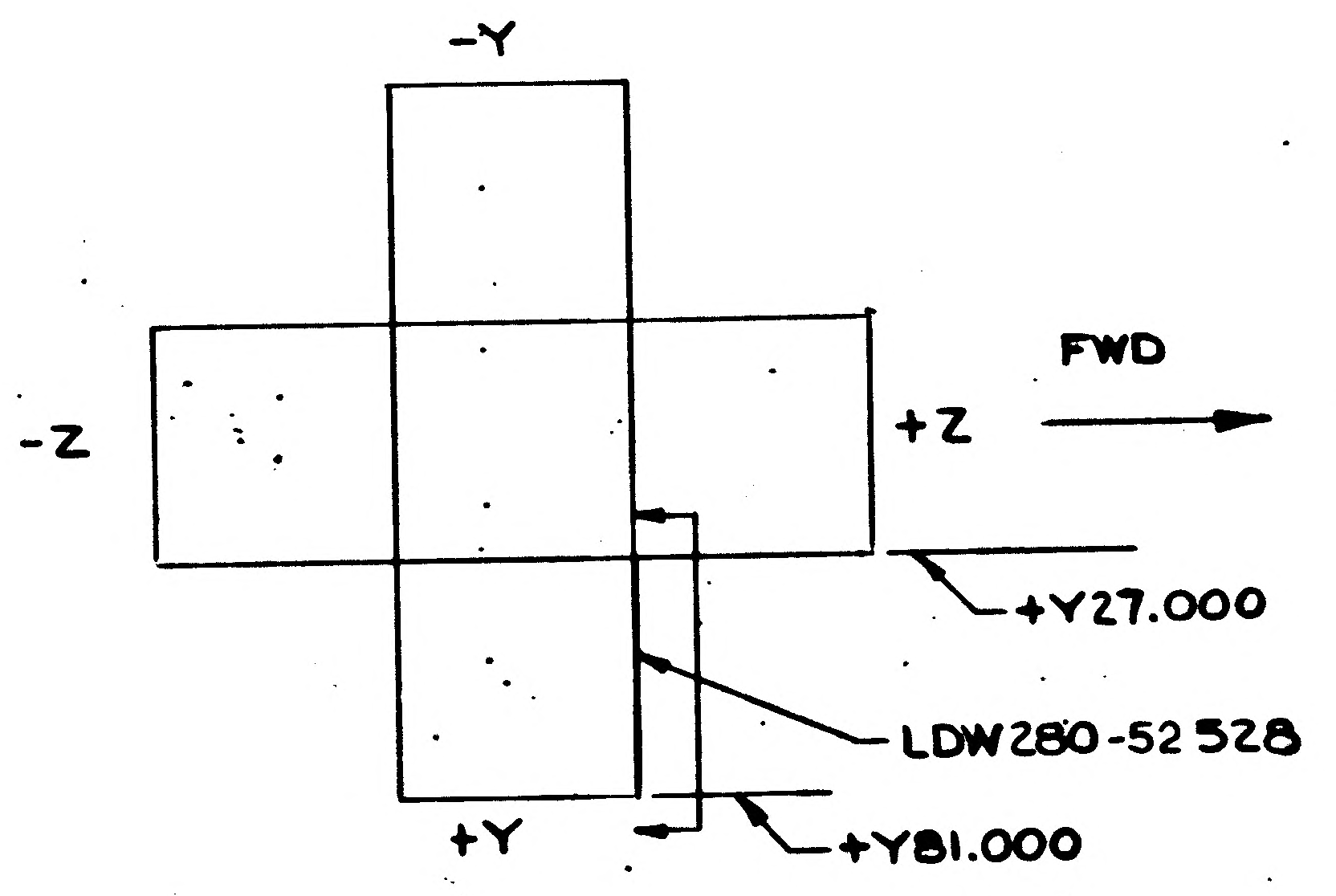

-Y
-Z
+Z
FWD
+Y
+Y27.000
LDW280-52528
+Y81.000

PLAN VIEW
FOR ENGRG REFERENCE ONLY

MANUFACTURING OPERATIONS UNLESS OTHERWISE SPECIFIED NOTES CHECKED ✓ APPLY TO THIS DWG.	
RUBBER STAMP PART NUMBER AND ALL OTHER MARKINGS IN REGION MARKED ▭ USE BOTH SIDES IF NECESSARY.	✓
FILLET AND INSIDE CORNER RADII TOLERANCES .016R TO .062R ± .008 .063R TO .250R ± .015 OVER .250R ± .030	
DEPTH SHOWN FOR TAPPED HOLES IS FULL THDS. 2-3 IMP THDS. BEYOND PERMISSIBLE.	
EXTERNAL THREAD LENGTH SHOWN INCLUDES 2 IMPERFECT THREADS MAX.	
DO NOT CADMIUM PLATE & PAINT HOLES OR SURFACES MARKED WITH DOUBLE ASTERISK.	
MISMATCH STEP OF ± .005 PERMISSIBLE DUE TO CHANGE OF CUTTERS AT INSIDE INTERSECTING SURFACES.	
DIAMETERS MARKED MUST BE CONCENTRIC WITHIN FULL INDICATOR READING	
HOLES MUST BE KEPT FREE OF CHROME PLATING SOLUTION.	
ALL DIMENSIONS SHOWN TO BE MET AFTER CADMIUM PLATING. THICKNESS OF PLATE .0003 MIN. TO .0005 MAX. MIN. THICKNESS TO BE .0002 ON THREADED AREAS. NO ALLOWANCE FOR PLATING IN HOLES	
125√ SURFACE ROUGHNESS INCLUDING REAMED HOLES PER MIL-STD-10	
250√ FOR ALL DRILLED HOLES	
REMOVE ALL BURRS. BREAK ALL EDGES .005-.030	
INSPECTION INFORMATION MINIMUM PERMISSIBLE EDGE DISTANCE IS 1.5 DIA OF FASTENER FROM FASTENER ℄	✓
SYMBOL ƒ DENOTES SURFACE TO BE MACHINED	
UNLESS OTHERWISE SPECIFIED TOLERANCE ON FLANGES IS ± 1/32	
LENGTHS OF AN, NAS & MS AL ALY RIVETS SHORTER THAN 1 INCH ARE NOT SPECIFIED.	
TOLERANCE ON LOFTED DELINEATIONS IS ± 1/16 EXCEPT AS NOTED	✓

DWG SIZE 34 X 106

PRINTING INFO ONLY
FULL SIZE SHEET AREA (36 x 108) 33.00 SQ. FT.
1/2 SIZE SHEET AREA (1/4 OF FULL) 8.25 SQ. FT.

PRINT TRIM LINE

C

B

LDW280-52528-A

LDW280-52528 A

03/03

NAS 9-1100

R-05449

CODE IDENT NO. 26512
LDW280-52528 SH 3

GRUMMAN AIRCRAFT ENGRG CORP., BETHPAGE, L. I., NEW YORK

	SIZE	CODE IDENT NO.		
LEM	J	26512	LDW280-52528	A
MODEL OR END ITEM	SCALE FULL		SHEET 3.00	

FOR PHOTO REPRODUCTION

K2

4 3 2 1

THIS IS AN ORIGINAL DRAWING

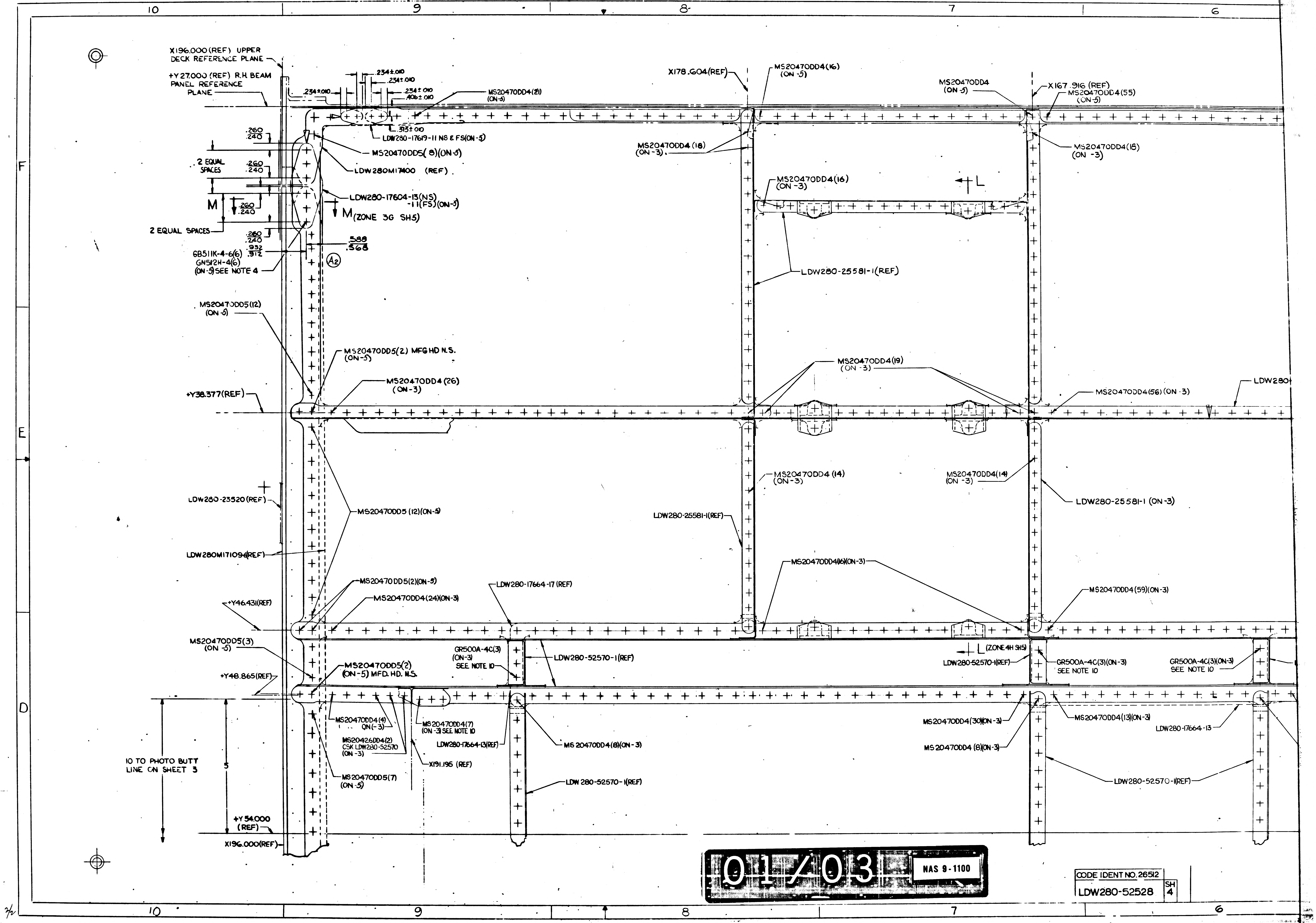
10
9
8
7
6
F
E
D
X196.000 (REF) UPPER DECK REFERENCE PLANE
+Y 27.000 (REF) R.H. BEAM PANEL REFERENCE PLANE
.234±.010
.234±.010
.234±.010
.234±.010
.406±.010
.313±.010
MS20470DD4(21) (ON-5)
LDW280-17619-11 NS & FS(ON-5)
MS20470DD5(8)(ON-5)
LDW280M17400 (REF)
LDW280-17604-13(NS) -11(FS)(ON-5)
M (ZONE 3G SH5)
M
.260 .240
2 EQUAL SPACES
.260 .240
.260 .240
2 EQUAL SPACES
.260 .240
.932 .912
.588 .568
GB511K-4-6(6) GN512H-4(6) (ON-5) SEE NOTE 4
A2
X178.604(REF)
MS20470DD4(16) (ON-5)
MS20470DD4 (ON-5)
X167.916 (REF)
MS20470DD4(55) (ON-5)
MS20470DD4 (18) (ON-3)
MS20470DD4(16) (ON-3)
MS20470DD4(16) (ON-3)
L
LDW280-25581-1(REF)
MS20470DD5(12) (ON-5)
MS20470DD5(2) MFG HD N.S. (ON-5)
MS20470DD4 (26) (ON-3)
MS20470DD4(19) (ON-3)
MS20470DD4(56)(ON-3)
LDW280
+Y38.377(REF)
MS20470DD4 (14) (ON-3)
MS20470DD4(14) (ON-3)
LDW280-25581-1 (ON-3)
LDW280-23520(REF)
MS20470DD5 (12)(ON-5)
LDW280-25581-1(REF)
LDW280M171094(REF)
MS20470DD4(16)(ON-3)
MS20470DD4(59)(ON-3)
MS20470DD5(2)(ON-5)
MS20470DD4(24)(ON-3)
LDW280-17664-17 (REF)
+Y46.431(REF)
MS20470DD5(3) (ON-5)
GR500A-4C(3) (ON-3) SEE NOTE 10
LDW280-52570-1(REF)
L (ZONE 4H SH5)
LDW280-52570-1(REF)
GR500A-4C(3)(ON-3) SEE NOTE 10
GR500A-4C(3)(ON-3) SEE NOTE 10
MS20470DD5(2) (ON-5) MFD. HD. N.S.
+Y48.865(REF)
MS20470DD4(4) (ON-3)
MS20426DD4(2) CSK LDW280-52570 (ON-3)
MS20470DD4(7) (ON-3) SEE NOTE 10
LDW280-17664-13(REF)
MS 20470DD4(8)(ON-3)
MS20470DD4(30)(ON-3)
MS 20470DD4 (8)(ON-3)
MS20470DD4(13)(ON-3)
LDW280-17664-13
X191.195 (REF)
MS20470DD5(7) (ON-5)
10 TO PHOTO BUTT LINE ON SHEET 3
5
LDW 280-52570-1(REF)
LDW280-52570-1(REF)
+Y54.000 (REF)
X196.000(REF)
01/03
NAS 9-1100
2/2

CODE IDENT NO. 26512
LDW280-52528
SH 4

6
5
4
3
2
K (ZONE 3G SH 5)
X131.140 (REF)
+Y 27.000 (REF)
LDW280M17401 (REF)
LDW280M17420-1 (ON-5)
GB511K-4-8(6)
GN512H-4(6) (ON-5)
LDW280-17612-17 (ON-5)
N (ZONE 3H SH 5)
K
.777
.757
MS20470DD5(10)
(ON-5)
MS20470DD5(4)
(ON-5)
.335
.315
2 EQUAL SPACES
.460
.440
2 EQUAL SPACES
.400
.380
N
.335
.315
LDW280-17612-15(ON-5)
.603
.583
(REF)
D470DD4(55)
N-5)
LDW280-23535 (REF)
20470DD4(18)
-3)
MS20470DD4(56) (ON-3)
LDW280-17433-15(ON-3)
MS20470DD4(12)
(ON-5)
MS20470DD5(2)
(ON-5) MFD HD N.S.
+Y38.377 (REF)
MS20470DD5(10)
(ON-5)
LDW280M17416-4(REF)
67
LDW280-23541(REF)
MS20470DD4 (13)
(ON-5)
MS20470DD4(12)
(ON-5)
LDW280-25632(REF)
LDW280-52678(REF)
LDW280-17128-15(REF)
DW280-25581-1 (ON-3)
LDW280-17664-17
MS20470DD4(59)(ON-3)
GR500A-4C(3)
(ON-3) SEE NOTE 10
LDW280M17578 (REF)
MS20470DD5(3) MFD HD NS (ON-5)
MS20470DD5 (2) (ON-5) MFD HD NS.
P
P (ZONE 3H SH 5)
+Y46.431 (REF)
MS20470DD5 (2)(ON-5)
MS20470DD5 (2)
MFD HD N.S (ON-5)
+Y48.865 (REF)
-4C(3)(ON-3)
TE 10
GR500A-4C(3)(ON-3)
SEE NOTE 10
LDW280-52570-1(REF)
MS20470DD4(11)(ON-5)
COORDINATE WITH
LDW280-23900 INSTL
LDW280-52570-1(REF)
LDW280-17664-13(REF)
PHOTO BUTT LINE
S20470DD4(13)(ON-3)
LDW280-17664-13
MS20470DD4(19) (ON-3)
MS20470DD4(8) (ON-3)
MS20470DD4(15) (ON-5)
COORDINATE WITH
LDW280-23900 INSTL
J
J (ZONE 6G SH 5)
MS20470DD5(5)
(ON-5)
LDW280-52570-1(REF)
LDW280-23573(REF)
MS20470DD4 (11)
(ON-5)
5
10 TO PHOTO BUTT
LINE ON SHEET 3
LDW280-52570-1(REF)
MS20470DD4 (7)
(ON-3)
H
(ZONE 6H SH 5)
H
+Y54.000 (REF)
TEMPLATE BUTT LINE
X131.140 (REF)
MS20470DD4 (11)
(ON-5)
MS20470DD5(5)
(ON-5) MFD HD N.S.
80
30

CODE IDENT NO. 26512
LDW280-52528 SH 4

02/03 NAS 9-1100

CODE IDENT NO. 26512
LDW280-52528 SH 4

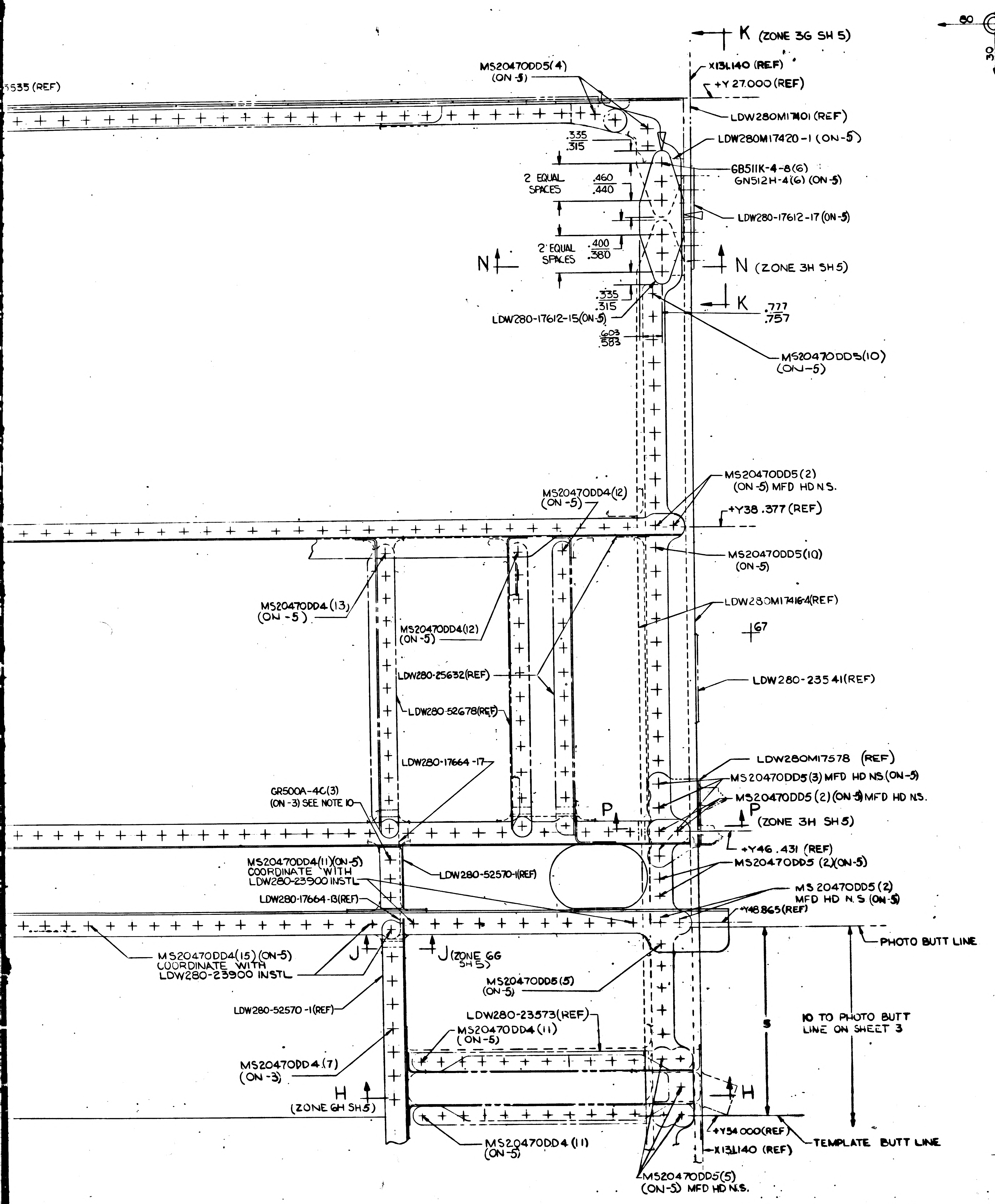
4
3
2
K (ZONE 3G SH 5)
X131.140 (REF)
+Y 27.000 (REF)
MS20470DD5(4) (ON -5)
5535 (REF)
LDW280M17401 (REF)
LDW280M17420-1 (ON-5)
.335 .315
GB511K-4-8(6)
GN512H-4(6) (ON-5)
2 EQUAL SPACES .460 .440
LDW280-17612-17 (ON-5)
2 EQUAL SPACES .400 .380
N
N (ZONE 3H SH 5)
.335 .315
K .777 .757
LDW280-17612-15(ON-5)
.603 .583
MS20470DD5(10) (ON-5)
MS20470DD5(2) (ON-5) MFD HD N.S.
MS20470DD4(12) (ON-5)
+Y38.377 (REF)
MS20470DD5(10) (ON-5)
LDW280M17416-4(REF)
MS20470DD4 (13) (ON -5)
MS20470DD4(12) (ON-5)
+67
LDW280-25632(REF)
LDW280-23541(REF)
LDW280-52678(REF)
LDW280-17664-17
LDW280M17578 (REF)
MS20470DD5(3) MFD HD N.S.(ON-5)
GR500A-4C(3) (ON-3) SEE NOTE 10
MS20470DD5 (2) (ON-5) MFD HD N.S.
P
P (ZONE 3H SH 5)
+Y46.431 (REF)
MS20470DD4(11)(ON-5) COORDINATE WITH LDW280-23900 INSTL.
LDW280-52570-1(REF)
MS20470DD5 (2)(ON-5)
LDW280-17664-13(REF)
MS 20470DD5 (2) MFD HD N.S (ON-5)
+Y48.865(REF)
PHOTO BUTT LINE
MS20470DD4(15) (ON-5) COORDINATE WITH LDW280-23900 INSTL
J
J (ZONE 6G SH 5)
MS20470DD5(5) (ON-5)
5
10 TO PHOTO BUTT LINE ON SHEET 3
LDW280-52570-1(REF)
LDW280-23573(REF)
MS20470DD4(11) (ON-5)
MS20470DD4(7) (ON-3)
H
H
(ZONE 6H SH 5)
+Y34.000(REF)
TEMPLATE BUTT LINE
MS20470DD4(11) (ON-5)
X131.140 (REF)
MS20470DD5(5) (ON-5) MFD HD N.S.
80
30

MANUFACTURING OPERATIONS

UNLESS OTHERWISE SPECIFIED NOTES CHECKED √ APPLY TO THIS DWG.

PART NUMBER AND ALL OTHER MARKINGS IN REGION MARKED ▨ USE BOTH SIDES IF NECESSARY.

FILLET AND INSIDE CORNER RADII TOLERANCES
.016R TO .062R ± .008
.063R TO .250R ± .015
OVER .250R ± .030

DEPTH SHOWN FOR TAPPED HOLES IS FULL THDS. 2-3 IMP THDS. BEYOND PERMISSIBLE.

EXTERNAL THREAD LENGTH SHOWN INCLUDES 2 IMPERFECT THREADS MAX.

DO NOT CADMIUM PLATE & PAINT HOLES OR SURFACES MARKED WITH DOUBLE ASTERISK.

MISMATCH STEP OF ± .005 PERMISSIBLE DUE TO CHANGE OF CUTTERS AT INSIDE INTERSECTING SURFACES.

DIAMETERS MARKED MUST BE CONCENTRIC WITHIN FULL INDICATOR READING

HOLES MUST BE KEPT FREE OF CHROME PLATING SOLUTION.

ALL DIMENSIONS SHOWN TO BE MET AFTER CADMIUM PLATING. THICKNESS OF PLATE .0003 MIN. TO .0005 MAX. MIN. THICKNESS TO BE .0002 ON THREADED AREAS. NO ALLOWANCE FOR PLATING IN HOLES

125 √ SURFACE ROUGHNESS INCLUDING REAMED HOLES PER MIL-STD-10

250 √ FOR ALL DRILLED HOLES

REMOVE ALL BURRS. BREAK ALL EDGES .005-.030

INSPECTION INFORMATION MINIMUM PERMISSIBLE AVERAGE EDGE DISTANCE MARKED IS

SYMBOL √ DENOTES SURFACE TO BE MACHINED

UNLESS OTHERWISE SPECIFIED TOLERANCE ON FLANGES IS ± 1/32

LENGTHS OF AN, NAS & MS AL ALY RIVETS SHORTER THAN 1 INCH ARE NOT SPECIFIED.

TOLERANCE ON LOFTED DELINEATIONS IS

DWG SIZE 34 X 106

PRINTING INFO ONLY
FULL SIZE SHEET AREA (36 X108)= 27 SQ. FT.
1/2 SIZE SHEET AREA (1/4 OF FULL)= 13.5 SQ. FT.

PRINT TRIM LINE

F
E
D

LDW280-52528 A

LDW280-52528 A

03/03

NAS 9-1100

R.05449

CODE IDENT NO. 26512
LDW280-52528 SH 4

GRUMMAN AIRCRAFT ENGRG CORP., BETHPAGE, L.I., NEW YORK

MODEL OR END ITEM	SIZE	CODE IDENT NO.		
LEM	J	26512	LDW280-52528	A
	SCALE FULL		SHEET 4.00	

FOR PHOTO REPRODUCTION

K2

THIS IS AN ORIGINAL DRAWING

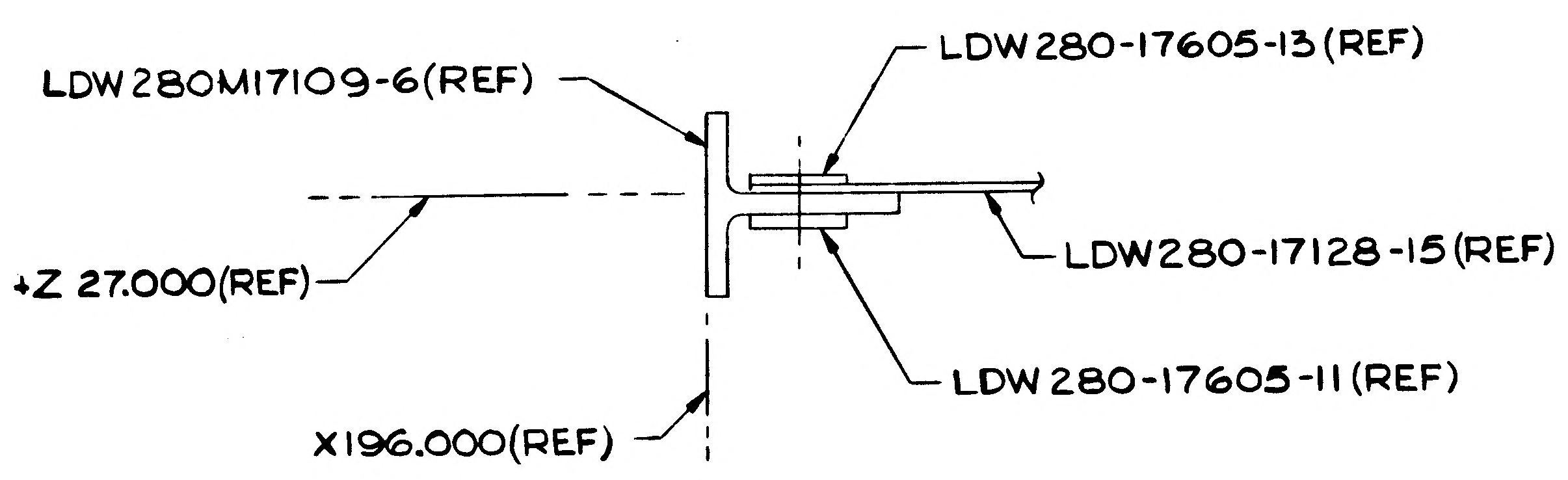
LDW280M17109-6(REF)
LDW280-17605-13(REF)
LDW280-17128-15(REF)
+Z 27.000(REF)
LDW280-17605-11(REF)
X196.000(REF)

SECTION A-A (ZONE 9A SH3)

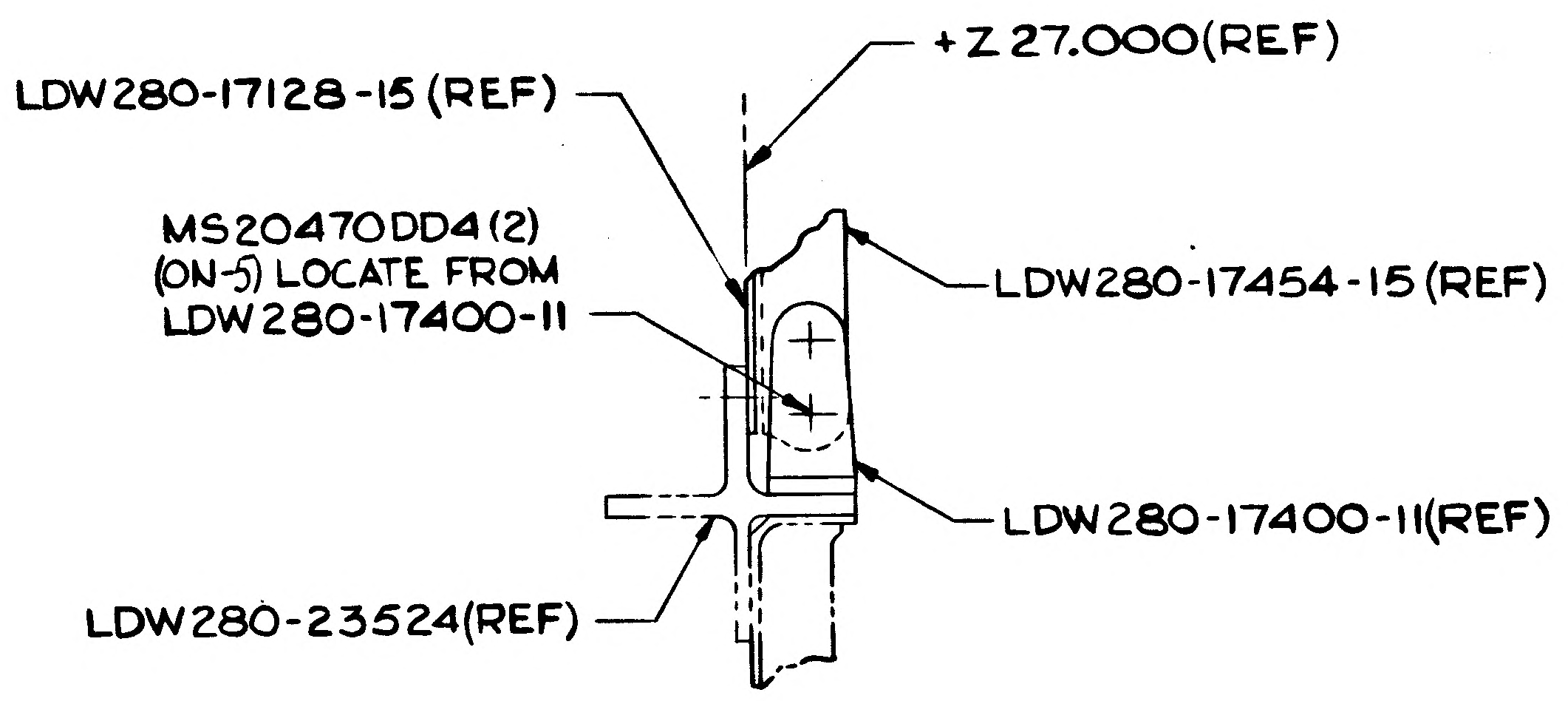
+Z 27.000(REF)
LDW280-17128-15(REF)
MS20470DD4(2)
(ON-5) LOCATE FROM
LDW280-17400-11
LDW280-17454-15(REF)
LDW280-17400-11(REF)
LDW280-23524(REF)

SECTION F-F (ZONE 5A SH3)

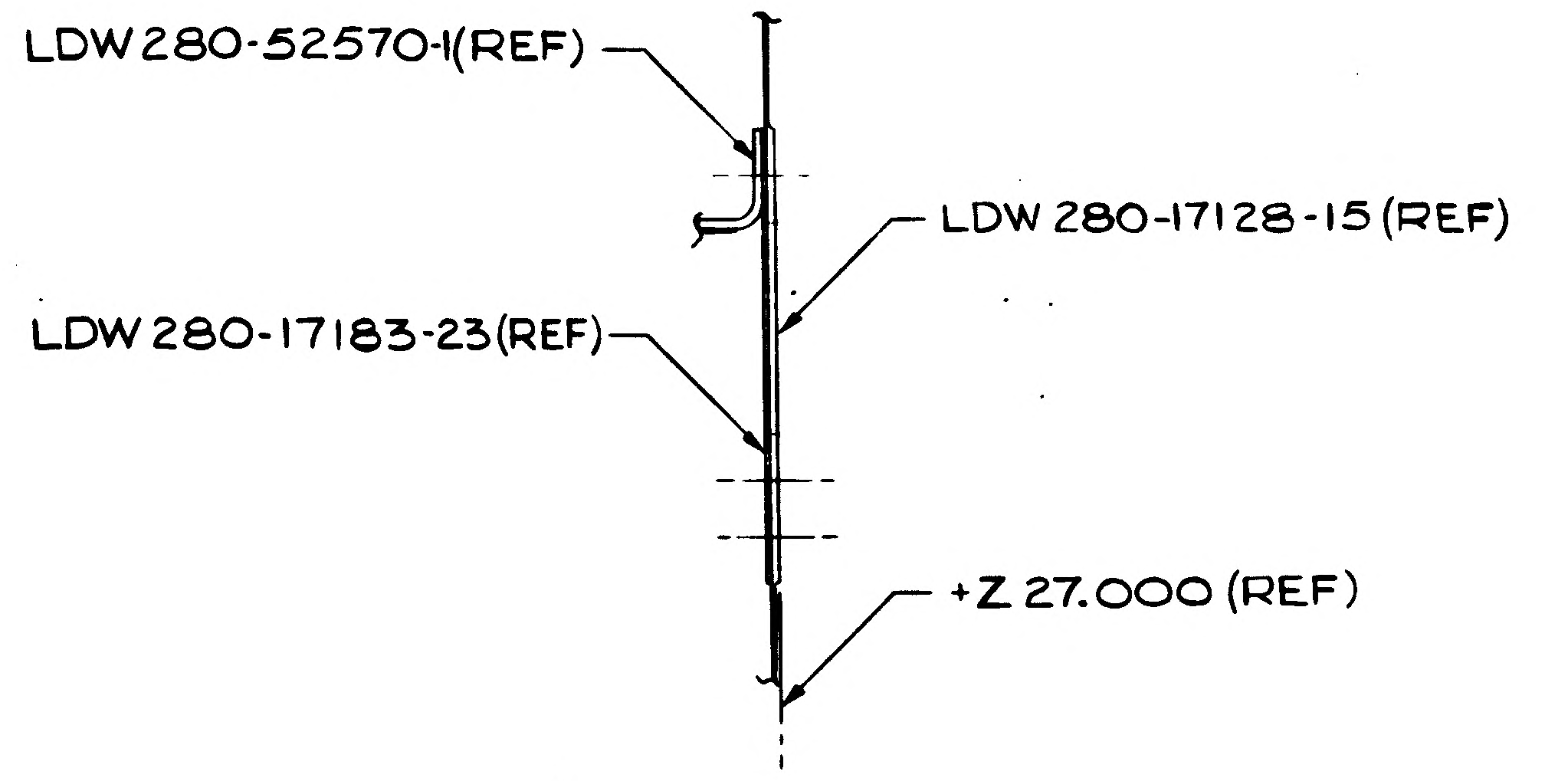
LDW280-52570-1(REF)
LDW280-17128-15(REF)
LDW280-17183-23(REF)
+Z 27.000 (REF)

SECTION G-G (ZONE 3C SH3)

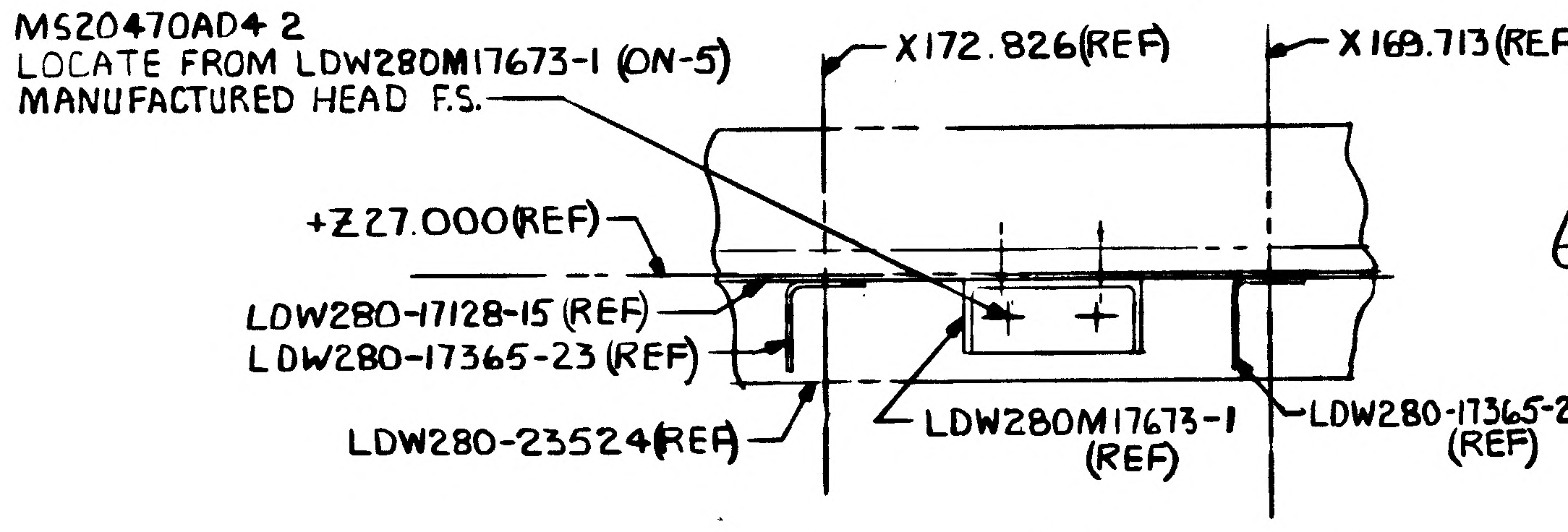
MS20470AD4 2
LOCATE FROM LDW280M17673-1 (ON-5)
MANUFACTURED HEAD F.S.
X172.826(REF)
X169.713(REF)
+Z27.000(REF)
LDW280-17128-15 (REF)
LDW280-17365-23 (REF)
LDW280-23524(REF)
LDW280M17673-1
(REF)
LDW280-17365-25
(REF)

SECTION T-T (ZONE 7A SH3)
(A1)

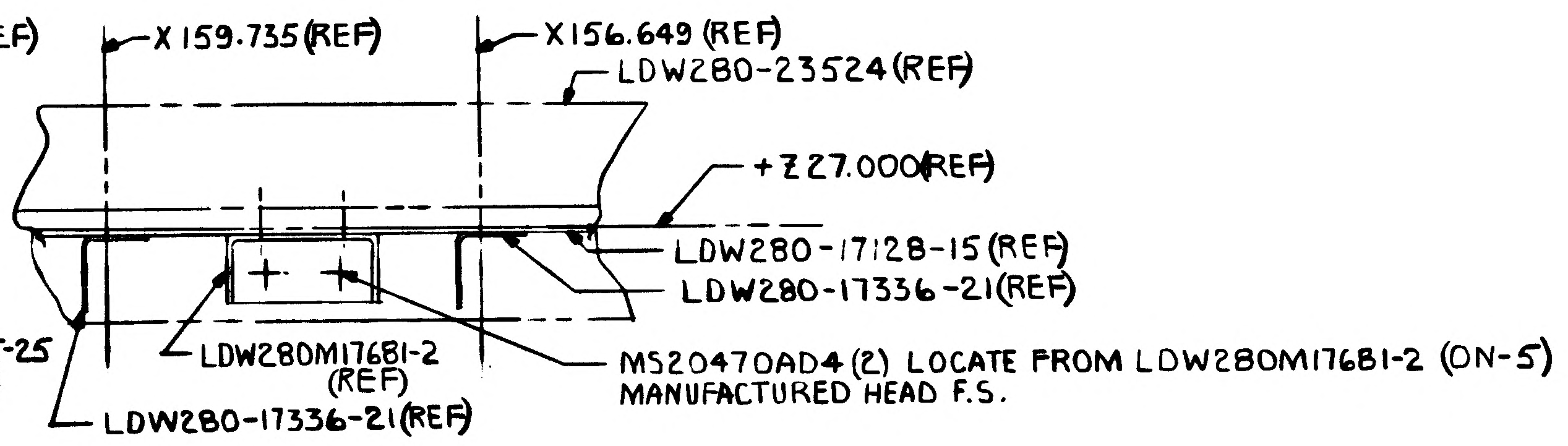
X159.735(REF)
X156.649 (REF)
LDW280-23524(REF)
+Z27.000(REF)
LDW280-17128-15(REF)
LDW280-17336-21(REF)
LDW280M17681-2
(REF)
MS20470AD4(2) LOCATE FROM LDW280M17681-2 (ON-5)
MANUFACTURED HEAD F.S.
LDW280-17336-21(REF)

SECTION S-S (ZONE 6A SH3)
(A1)

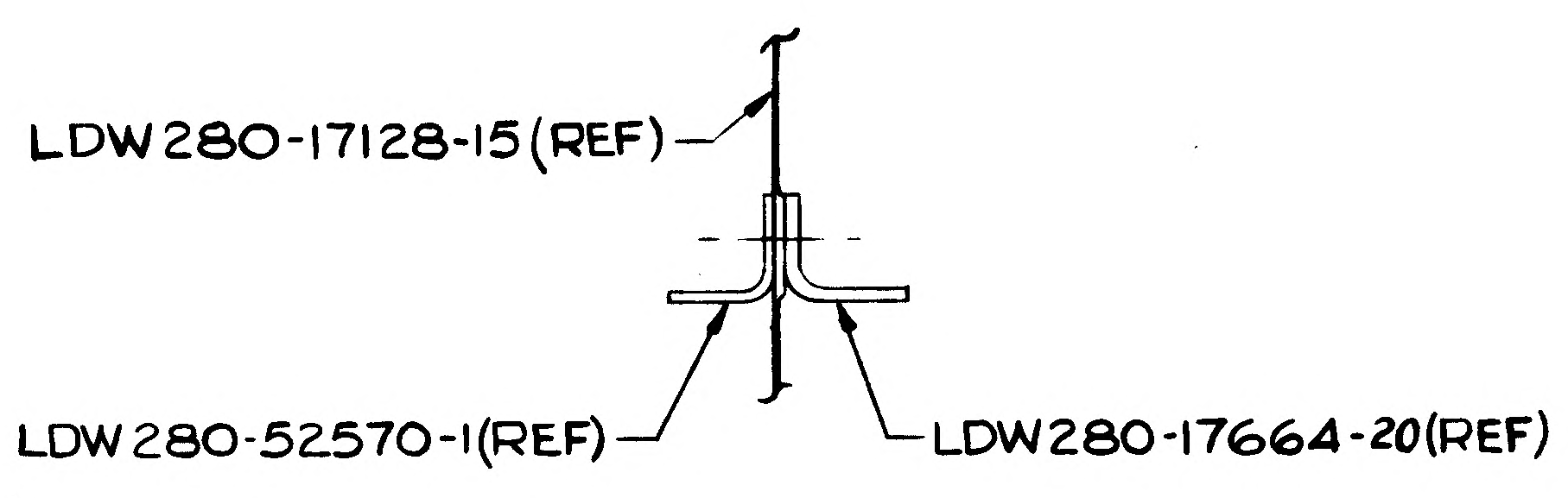
LDW280-17128-15(REF)
LDW280-52570-1(REF)
LDW280-17664-20(REF)

SECTION B-B (ZONE 5C SH3)

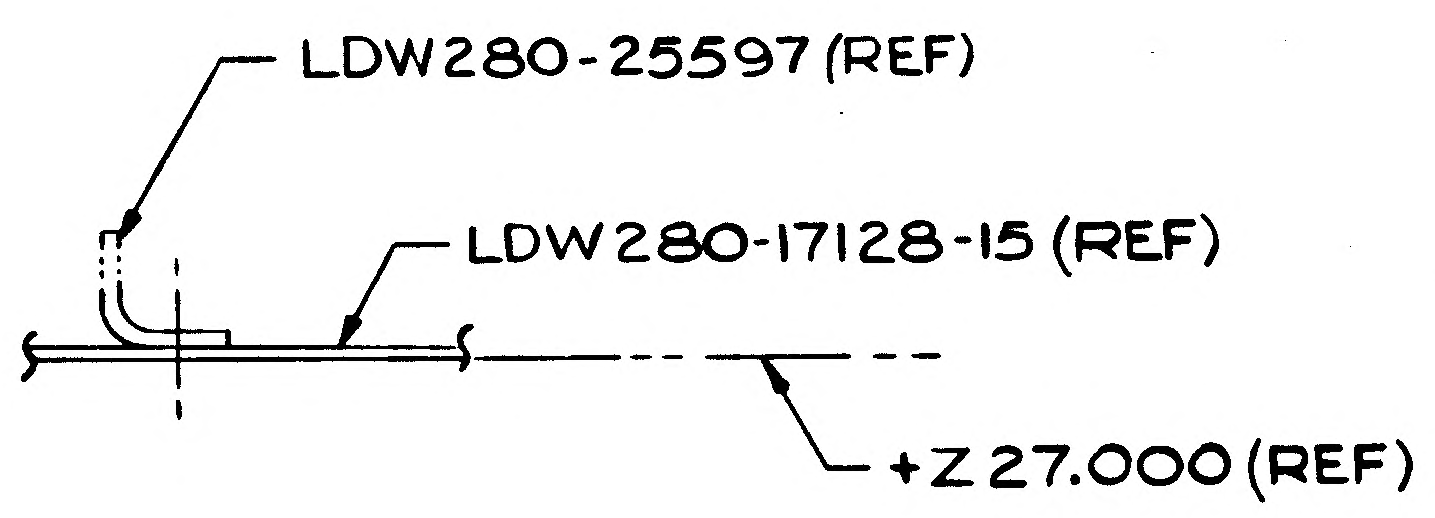
LDW280-25597 (REF)
LDW280-17128-15 (REF)
+Z 27.000 (REF)

SECTION C-C (ZONE 3A SH3)

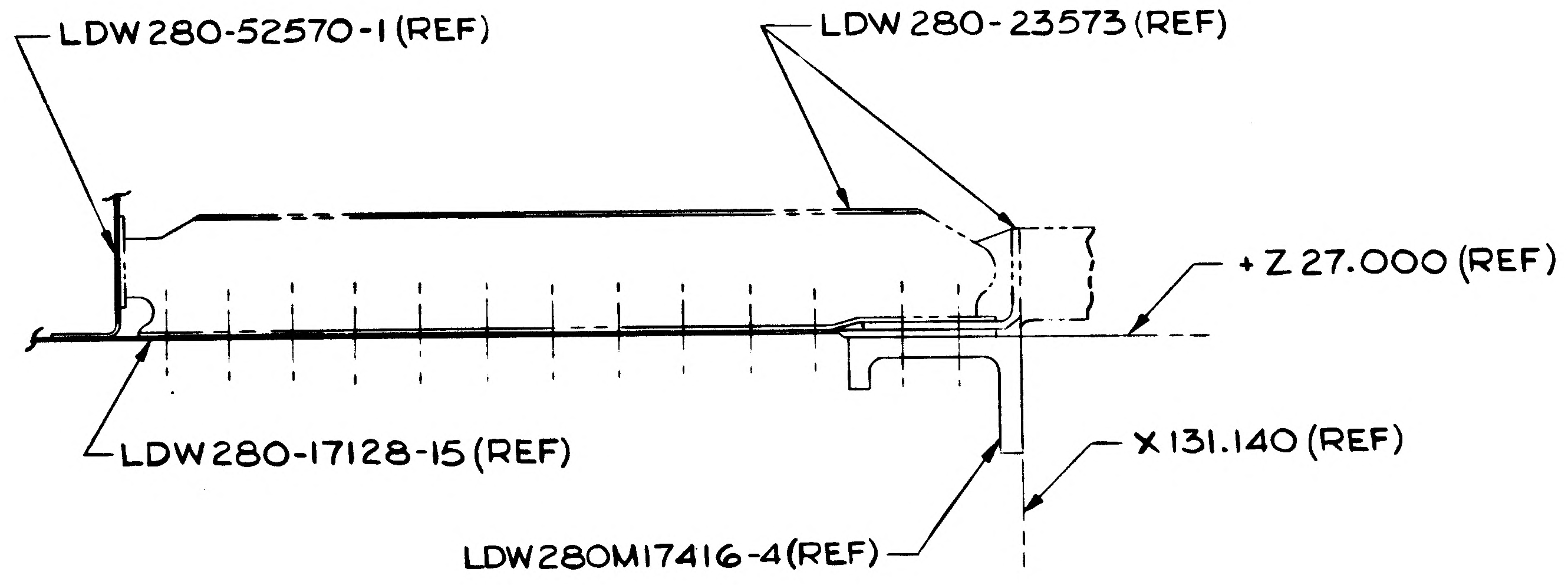
LDW280-52570-1 (REF)
LDW280-23573 (REF)
+Z 27.000 (REF)
LDW280-17128-15(REF)
X131.140 (REF)
LDW280M17416-4(REF)

SECTION H-H (ZONE 3D SH4)

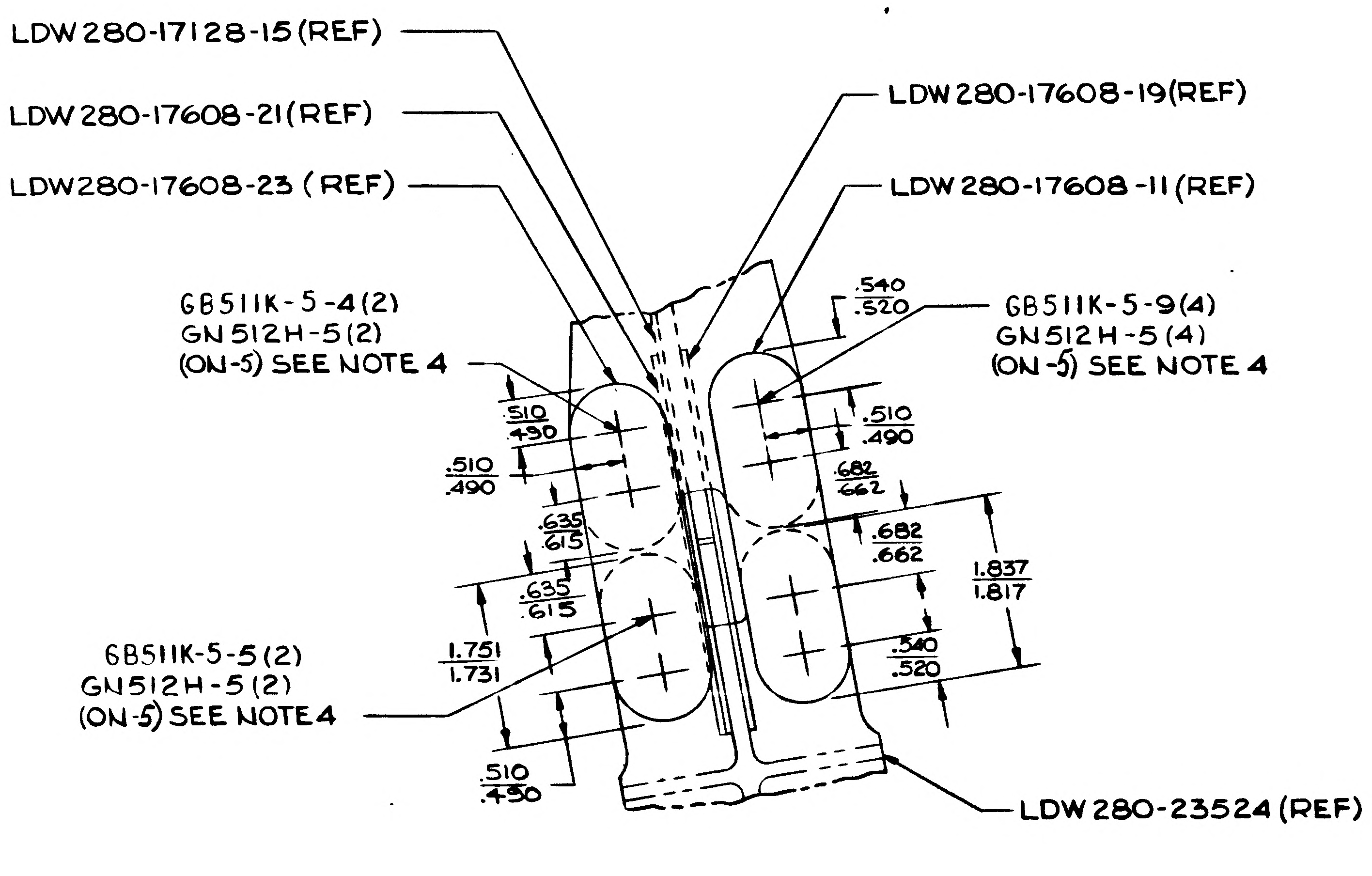
LDW280-17128-15(REF)
LDW280-17608-21(REF)
LDW280-17608-23 (REF)
LDW280-17608-19(REF)
LDW280-17608-11(REF)
GB511K-5-4(2)
GN512H-5(2)
(ON-5) SEE NOTE 4
.540
.520
GB511K-5-9(4)
GN512H-5(4)
(ON-5) SEE NOTE 4
.510
.490
.510
.490
.510
.490
.682
.662
.635
.615
.682
.662
1.837
1.817
.635
.615
1.751
1.731
.540
.520
GB511K-5-5(2)
GN512H-5(2)
(ON-5) SEE NOTE4
.510
.450
LDW280-23524 (REF)

SECTION D-D (ZONE 3A SH3)

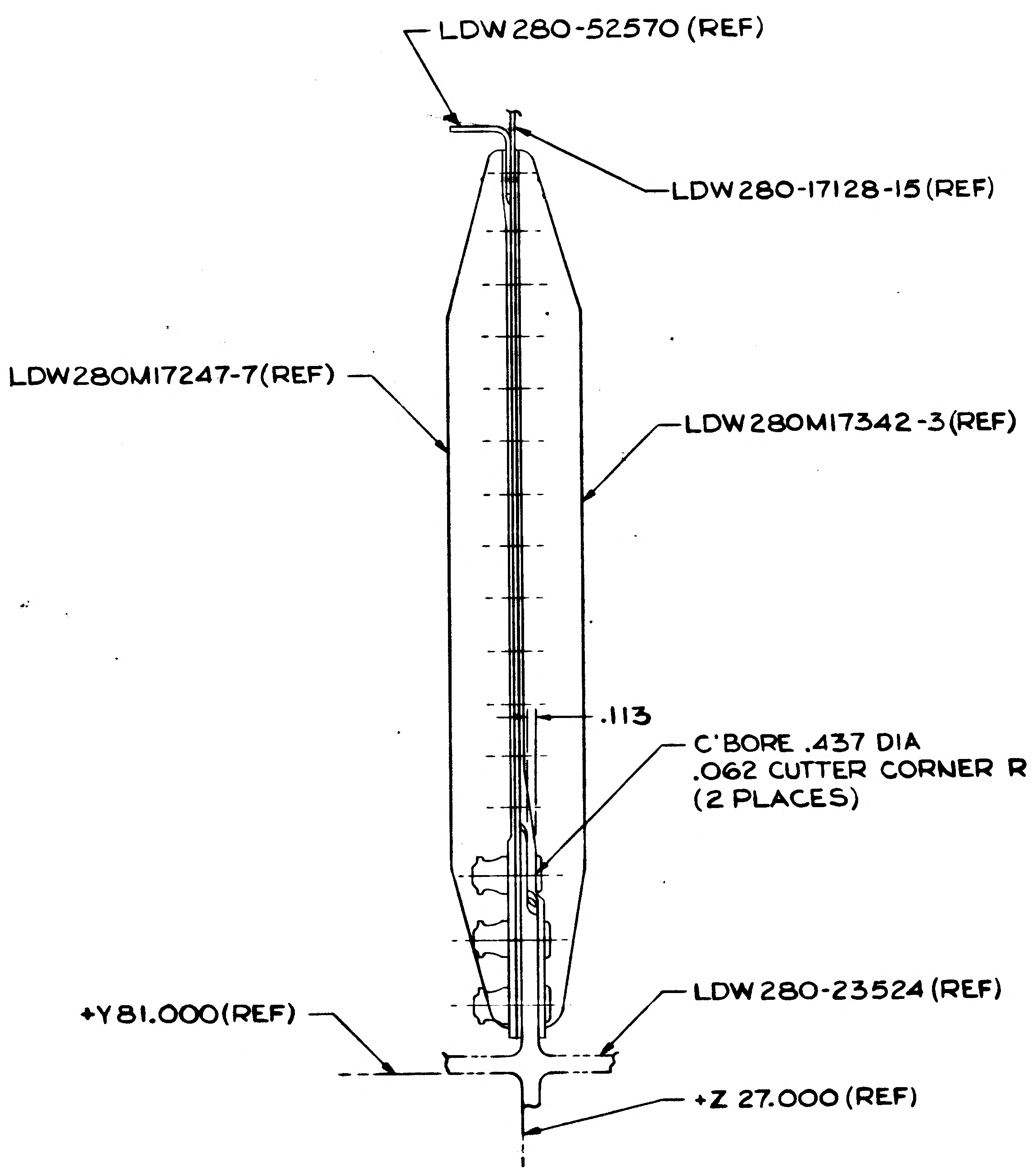
LDW280-52570 (REF)
LDW280-17128-15(REF)
LDW280M17247-7(REF)
LDW280M17342-3(REF)
.113
C'BORE .437 DIA
.062 CUTTER CORNER R
(2 PLACES)
LDW280-23524(REF)
+Y81.000(REF)
+Z 27.000 (REF)

SECTION E-E (ZONE 4A SH3)

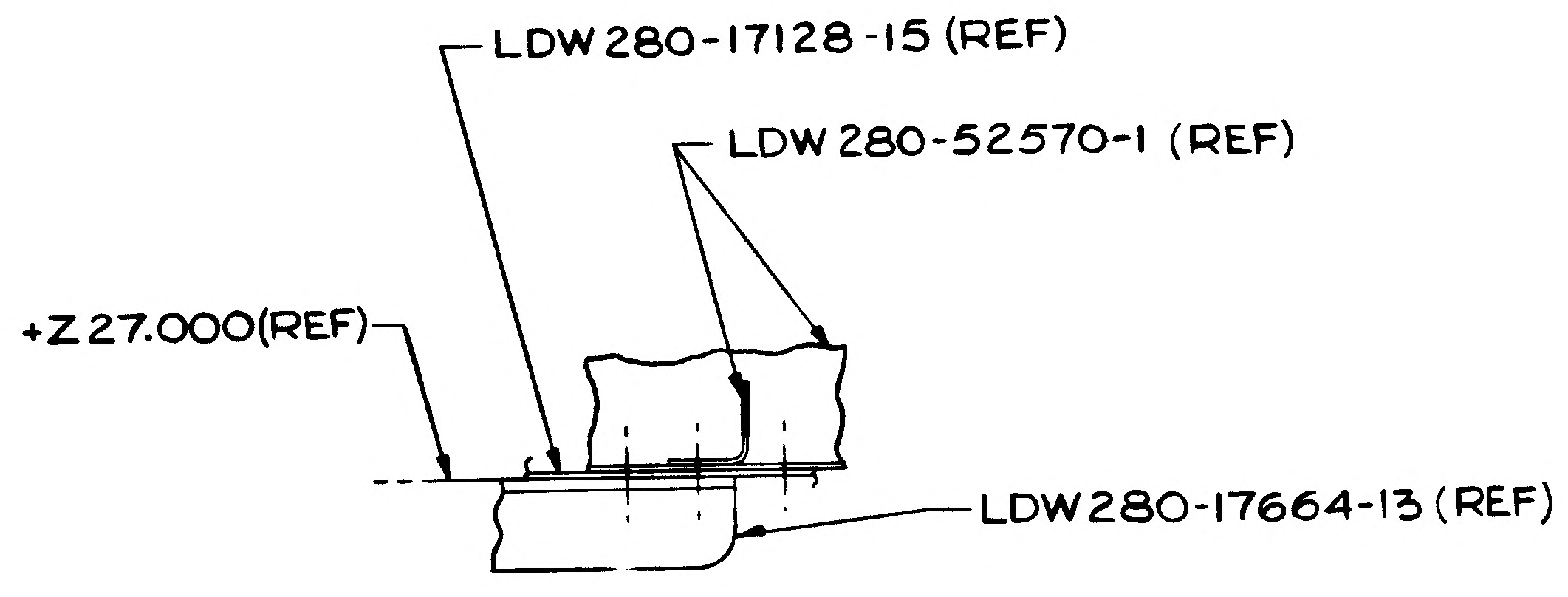
LDW280-17128-15 (REF)
LDW280-52570-1 (REF)
+Z27.000(REF)
LDW280-17664-13 (REF)

SECTION J-J (ZONE 4D SH4)

01/02 NAS 9-1100

CODE IDENT NO. 26512
LDW280-52528
SH 5

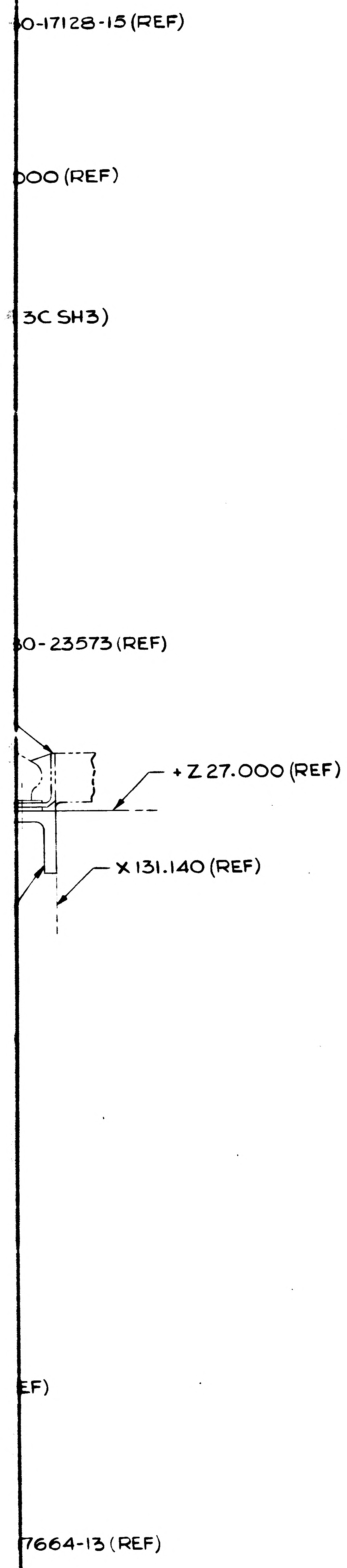
0-17128-15 (REF)
000 (REF)
3C SH3)
0-23573 (REF)
+Z 27.000 (REF)
X 131.140 (REF)
EF)
7664-13 (REF)

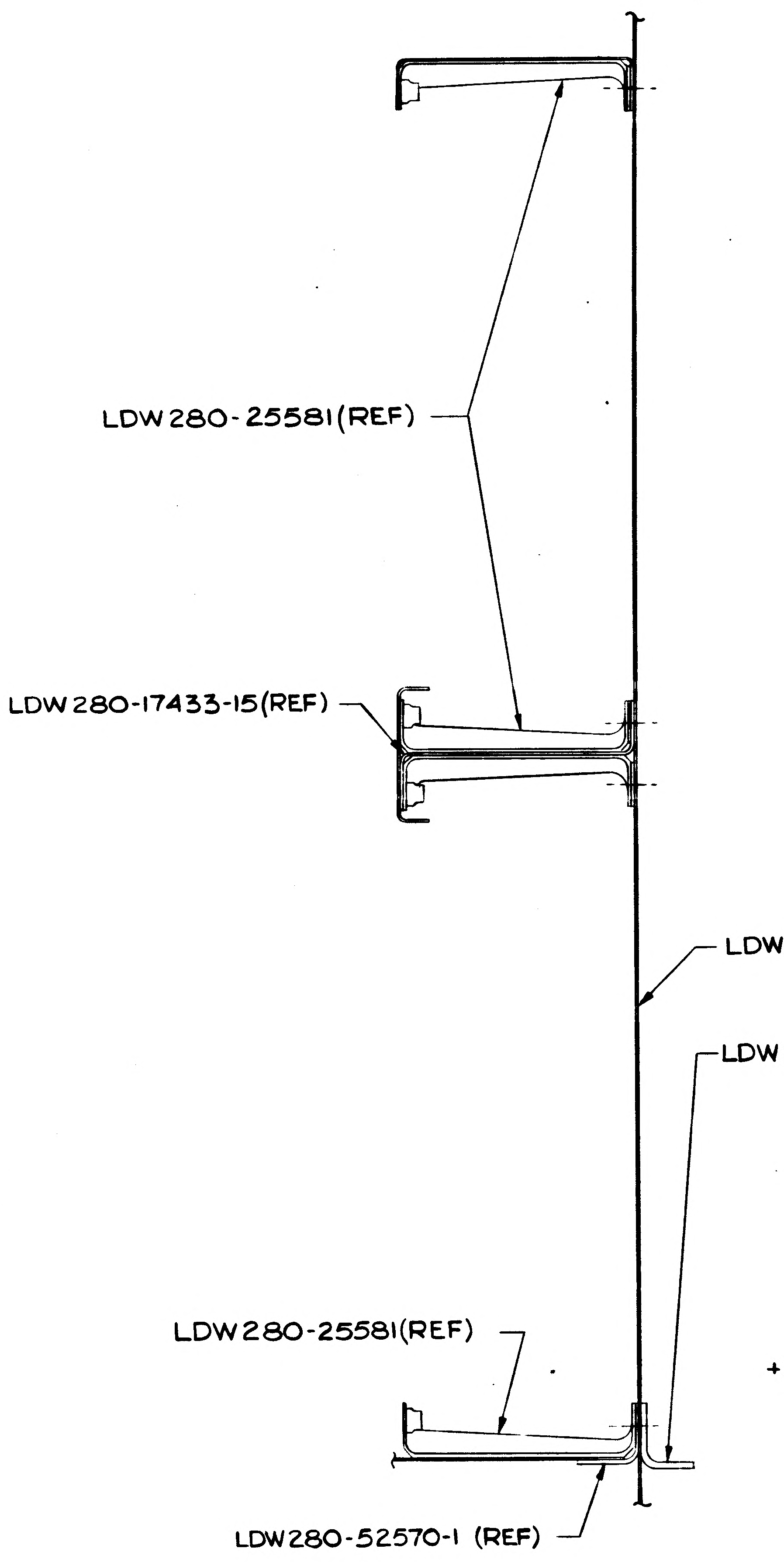
LDW280-25581(REF)
LDW280-17433-15(REF)
LDW280-17128-15(REF)
LDW280-17664-17(REF)
LDW280-25581(REF)
LDW280-52570-1 (REF)

SECTION L-L (ZONE 7D SH4)

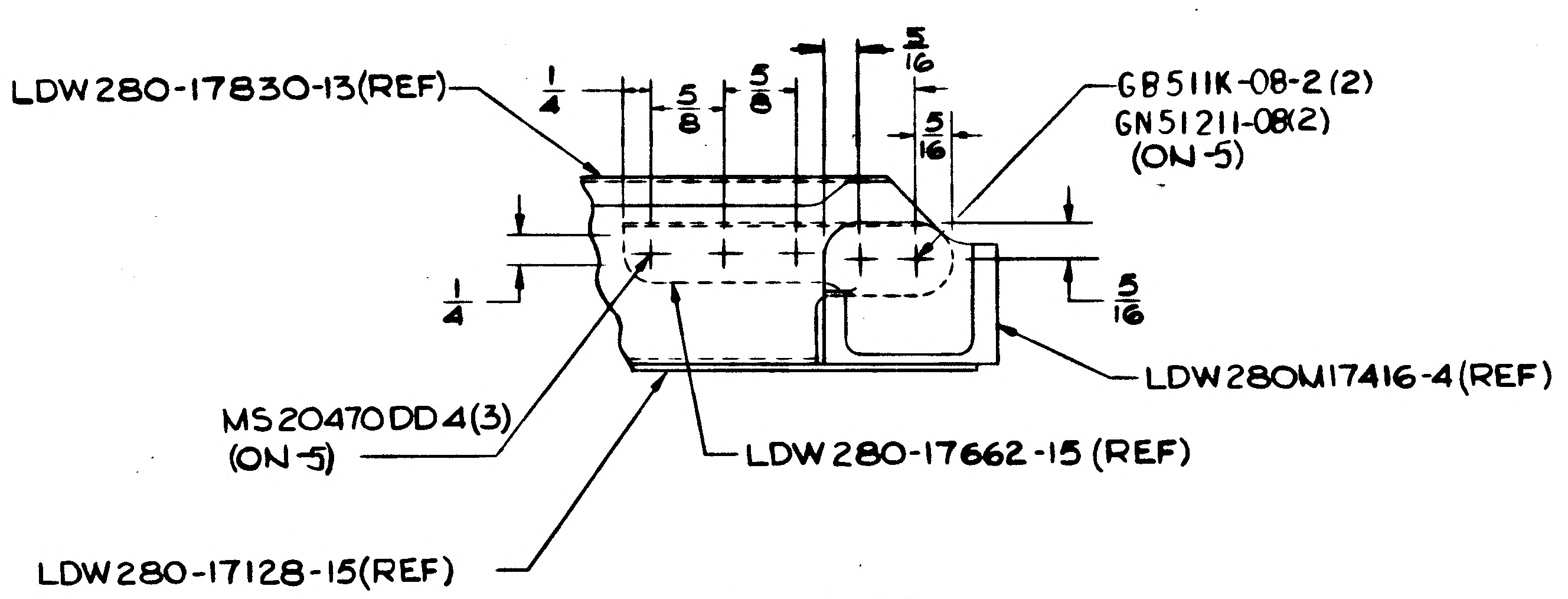
LDW280-17830-13(REF)
1/4
5/8
5/8
5/16
5/16
1/4
5/16
GB511K-08-2 (2)
GN51211-08(2)
(ON-5)
LDW280M17416-4(REF)
LDW280-17662-15 (REF)
MS20470DD4(3)
(ON-5)
LDW280-17128-15(REF)

SECTION R-R (ZONE 3B SH3)

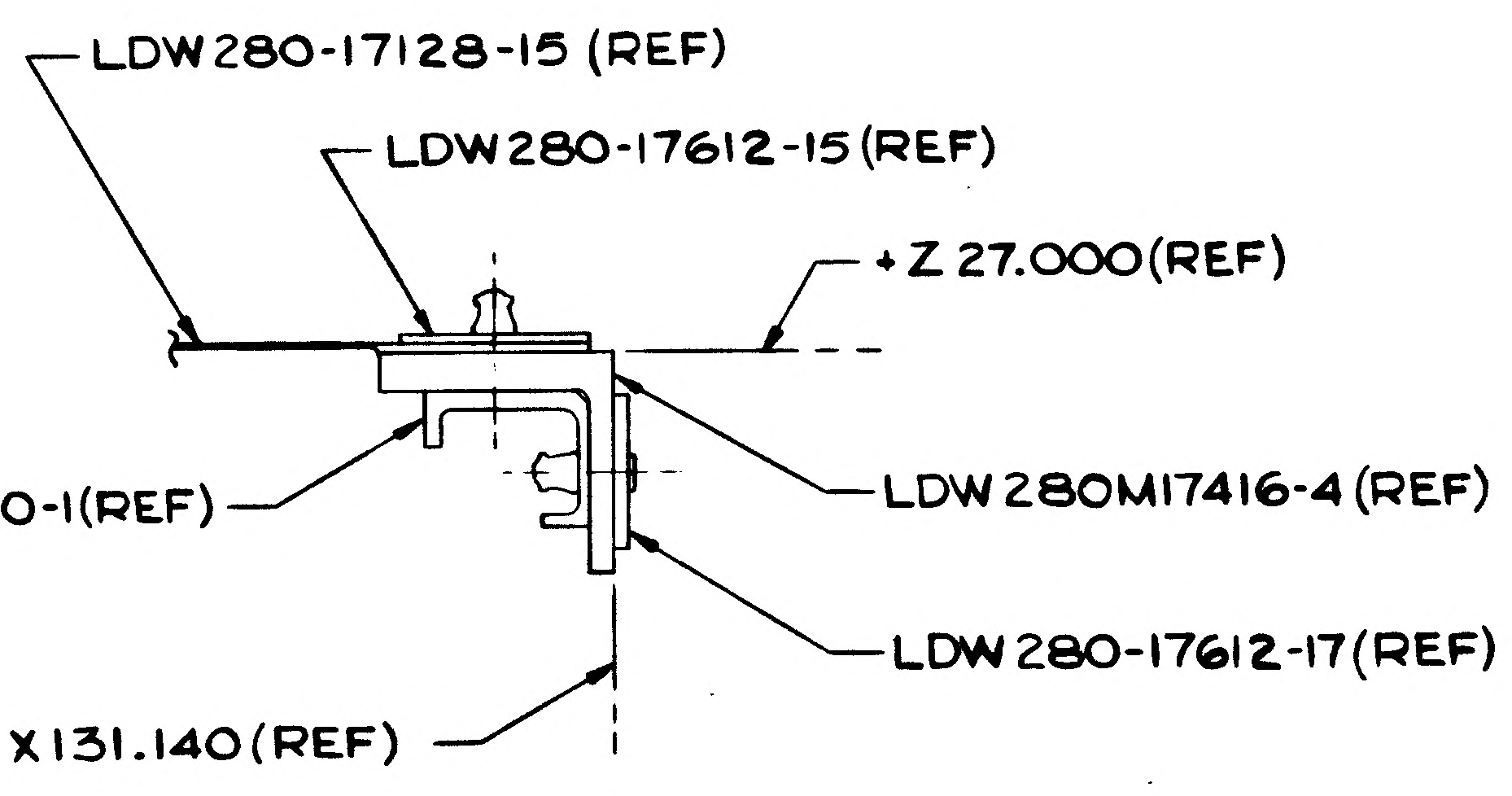
LDW280-17128-15 (REF)
LDW280-17612-15 (REF)
+Z 27.000(REF)
LDW280M17420-1(REF)
LDW280M17416-4 (REF)
LDW280-17612-17(REF)
X131.140 (REF)

SECTION N-N (ZONE 3F SH4)

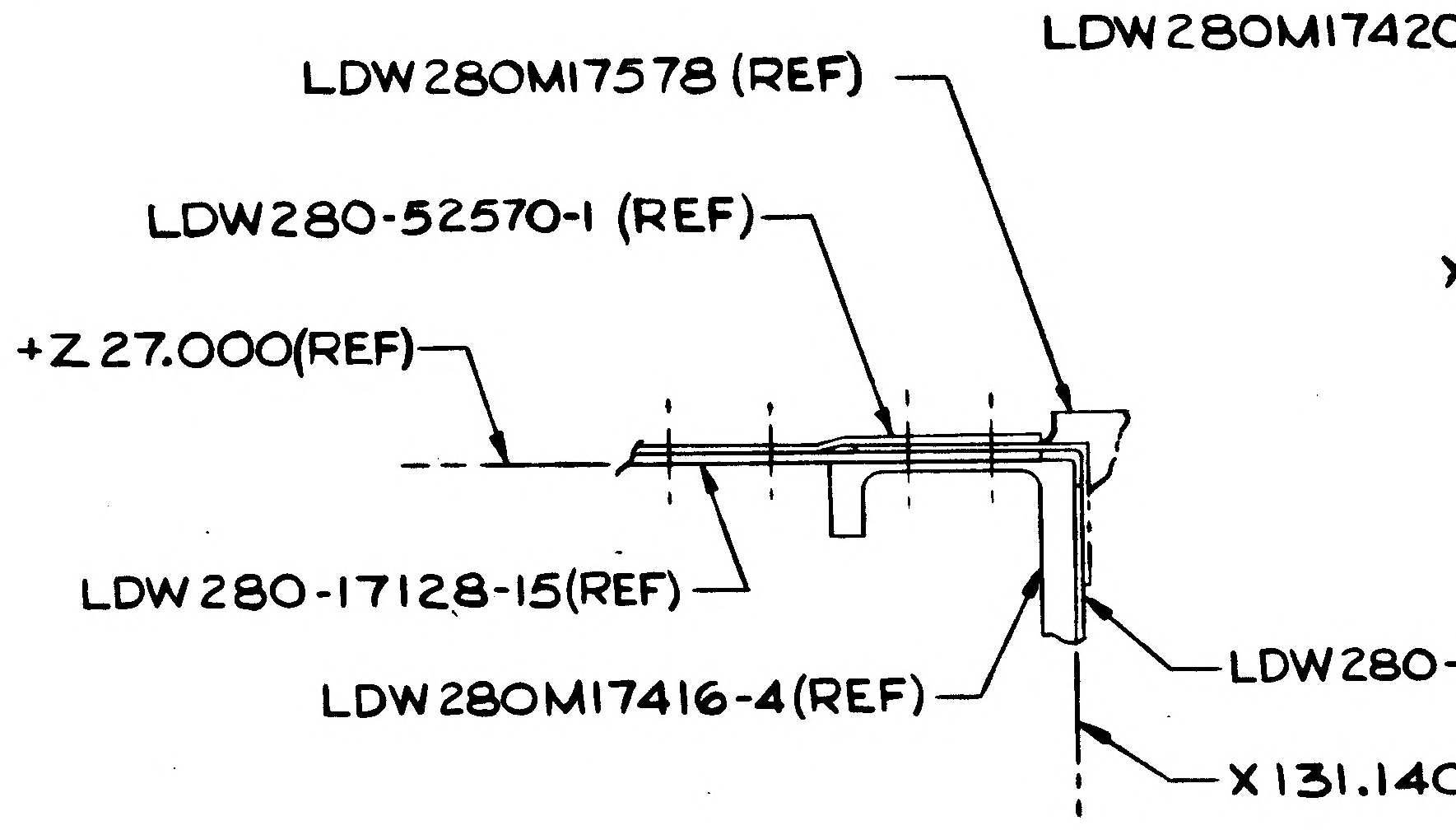
LDW280M17578 (REF)
LDW280-52570-1 (REF)
+Z 27.000(REF)
LDW280-17128-15(REF)
LDW280M17416-4(REF)
LDW280-23541(REF)
X131.140 (REF)

SECTION P-P (ZONE 3D SH4)

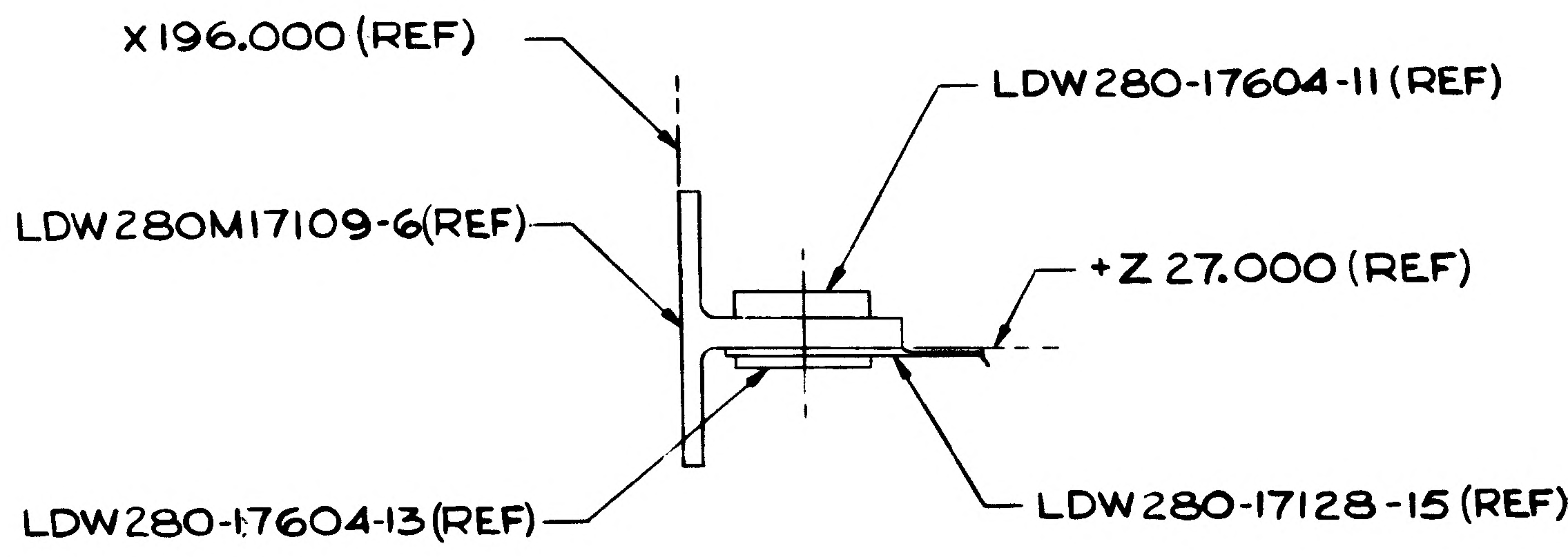
X196.000 (REF)
LDW280-17604-11 (REF)
LDW280M17109-6(REF)
+Z 27.000 (REF)
LDW280-17604-13(REF)
LDW280-17128-15 (REF)

SECTION M-M (ZONE 9F SH4)

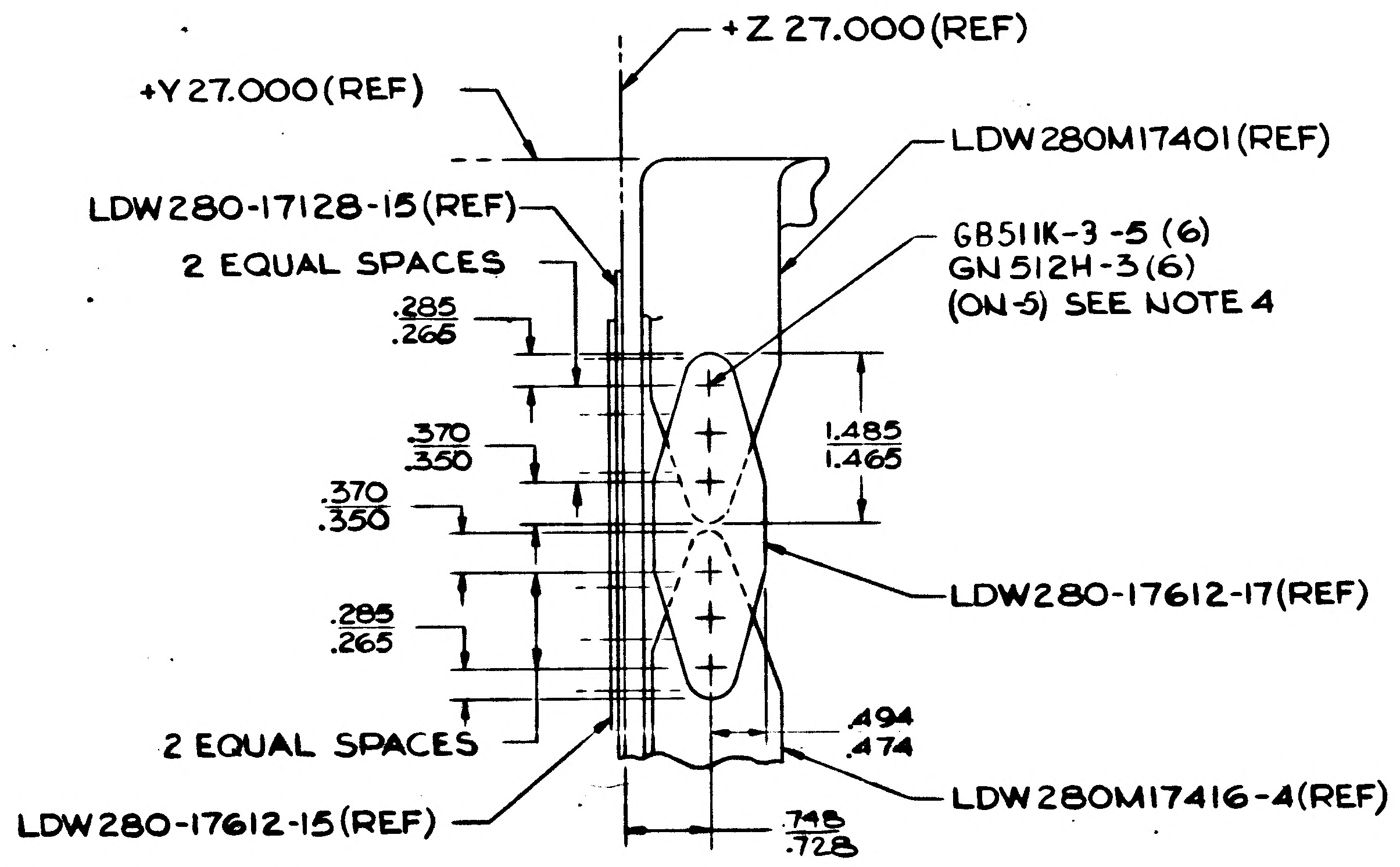
+Z 27.000(REF)
+Y 27.000(REF)
LDW280M17401(REF)
LDW280-17128-15(REF)
2 EQUAL SPACES
GB511K-3 -5 (6)
GN 512H-3(6)
(ON-5) SEE NOTE 4
.285/.265
.370/.350
.370/.350
1.485/1.465
.285/.265
LDW280-17612-17(REF)
2 EQUAL SPACES
.494/.474
LDW280M17416-4(REF)
LDW280-17612-15(REF)
.748/.728

VIEW K-K (ZONE 3F SH4)

MANUFACTURING OPERATIONS
UNLESS OTHERWISE SPECIFIED
NOTES CHECKED √ APPLY TO THIS DWG.

PART NUMBER
AND ALL OTHER MARKINGS
IN REGION MARKED ⊠
USE BOTH SIDES IF NECESSARY.

FILLET AND INSIDE CORNER
RADII TOLERANCES
.016R TO .062R ± .010
.063R TO .250R ± .015
OVER .250R ± .030

DEPTH SHOWN FOR TAPPED
HOLES IS FULL THDS. 2-3 IMP THDS.
BEYOND PERMISSIBLE.

EXTERNAL THREAD LENGTH
SHOWN INCLUDES
2 IMPERFECT THREADS MAX.

DO NOT CADMIUM PLATE & PAINT
HOLES OR SURFACES MARKED
WITH DOUBLE ASTERISK.

MISMATCH STEP OF ± .005
PERMISSIBLE DUE TO CHANGE
OF CUTTERS AT INSIDE
INTERSECTING SURFACES.

DIAMETERS MARKED
MUST BE CONCENTRIC WITHIN
FULL INDICATOR
READING

HOLES MUST BE KEPT FREE OF
CHROME PLATING SOLUTION.

ALL DIMENSIONS SHOWN TO BE MET
AFTER CADMIUM PLATING.
THICKNESS OF PLATE .0003 MIN.
TO .0005 MAX. MIN. THICKNESS TO
BE .0002 ON THREADED AREAS.
NO ALLOWANCE FOR PLATING IN
HOLES

125 √ SURFACE ROUGHNESS
INCLUDING REAMED HOLES
PER MIL-STD-10

200 √ FOR ALL DRILLED HOLES

REMOVE ALL BURRS.
BREAK ALL EDGES .015-.031

INSPECTION INFORMATION
MINIMUM PERMISSIBLE
AVERAGE EDGE DISTANCE
MARKED IS

SYMBOL √ DENOTES SURFACE
TO BE MACHINED

UNLESS OTHERWISE SPECIFIED
TOLERANCE ON FLANGES IS ± 1/32

LENGTHS OF AN, NAS & MS AL ALY
RIVETS SHORTER THAN 1 INCH ARE
NOT SPECIFIED.

TOLERANCE ON LOFTED
DELINEATIONS IS

DWG SIZE 34 X 88

PRINTING INFO ONLY
FULL SIZE SHEET AREA (36 X 90)= 22.50 SQ. FT.
1/2 SIZE SHEET AREA (1/4 OF FULL)= 5.62 SQ. FT.
PRINT TRIM LINE

J H G

LDW280-52528 A

LDW280-52528 A

02/02 NAS 9-1100

R-c5449

CODE IDENT NO. 26512
LDW280-52528 SH 5

GRUMMAN AIRCRAFT ENGRG CORP., BETHPAGE, L. I., NEW YORK

SIZE J	CODE IDENT NO. 26512	LDW280-52528	A
LEM MODEL OR END ITEM	SCALE FULL		SHEET 5.00

NOT FOR PHOTO REPRODUCTION

GRUMMAN AIRCRAFT ENGINEERING CORP.
CODE IDENT NO. 26512

ENG 32.1 REV 3-65

ENGINEERING ORDER

DWG. NO. LDW280-52528	EO NO. B1
CONTROL INFO NO. LDW280A3727	

ADD LDW280-52528-7 INSTL IDENT TO LDW280-52528-5 INSTL
EXCEPT LDW280-52528-9 ASSY REPLACES LDW280-52528-3 ASSY

ADD LDW280-52528-9 ASSY REPLACES & IS IDENT TO
LDW280-52528-3 EXCEPT THAT LDW280-17433-19 REPLACES
LDW280-17433-15

-7 IS EFF ON LM-3(33) N/A LDW280-53510 1/MOD

REMOVE REQTS OF LM-3(33) FOR -5 INSTL

DETAIL SPEC REQ		CL II ENGRG CHG		CL I ENGRG CHG		2

REASON FOR EO: ELIMINATION OF (1) PYRO RELAY BOX REQUIRES MOUNTING OF ELECT CONN

DESCRIPTION OF EO: ADDED -7 INSTL & -9 ASSY, REMOVED REQTS OF LM-3(33) FOR -5 INSTL

GAEC EO RELEASE: ER 12/14/6

MODEL	EFFECTIVITY PROCURING ACTIVITY NO.	EFFECTIVITY GAEC UNIT NO.	EFFECTIVITY SUB CONTR UNIT NO.
LM		LM-3(33)	

DRAWING CHANGE REQD		DISPOSITION OF PARTS										
✓		✓		APPROVED BY							RMC	
				DATE	1-7-66				12/		11-6-66	12/10/66
REVISE DWG	RECORD EO	REWORK	SCRAP	5	VDI	SUPPORT	RELIAB. GROUP	GROUP LEADER	STRESS GROUP	LIAISON ENGRG	PROJ ENGRG	~~CONT~~

PRIORITY	DRAWING TITLE	DRAWING NO.	EO NO.
C	BEAM PANEL INSTL DESCENT STAGE - RH FORWARD	LDW280-52528	B1

ISSUED BY G. BARNES / J. STRAKOSCH X1392 SECTION VDI GROUP NO. 335 PL 35

01

NAS 9-1100

ENG 32.1 REV 3-65

GRUMMAN AIRCRAFT ENGINEERING CORP.
CODE IDENT NO. 26512

ENGINEERING ORDER

DWG. NO. LDW280-52528

EO NO. B2

CONTROL INFO NO. LDW280A-3680

FOR LM-2 & LM-3

IN FIELD & B/M ON LDW280-52528-5 INSTAL. LDW280-18202-11 REPLACES LDW280M17673-1 & LDW280-18202-17 REPLACES LDW280M 17681-2

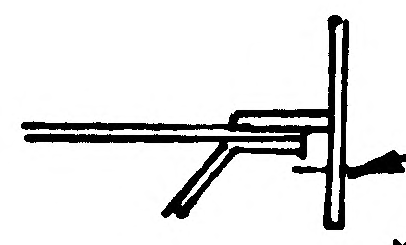
REMOVE MS 20470-AD4 2

* IN PARTS WITH HOLES ALREADY DRILLED PLUG WITH ALUMINUM RIVETS MS20470-AD4

DETAIL SPEC REQ		CL II ENGRG CHG		CL I ENGRG CHG		2

REASON FOR EO: NEW PARTS REQ'D. FOR DIAGONAL TEE BRACING

DESCRIPTION OF EO: ON LDW28-23534-5 ADDED: LDW280-18202-11 & -17 REMOVED: LDW280M17673-1 & LDW280M17681-2 MS20470-AD4 (2)

GAEC EO RELEASE: R FR 12/16/[illegible]

MODEL	EFFECTIVITY		
	PROCURING ACTIVITY NO.	GAEC UNIT NO.	SUB CONTR UNIT NO.
LM		LM-2 (32)	
LM		LM-3 (33)	

DRAWING CHANGE REQD		DISPOSITION OF PARTS		APPROVED BY	[illegible]				[illegible]		[illegible]	[illegible]
✓		✓		DATE	12/11/66				12/14/66		12/14/66	12/16/66
REVISE DWG	RECORD EO	REWORK	SCRAP	1	VDI	SUPPORT	RELIAB. GROUP	GROUP LEADER	STRESS GROUP	LIAISON ENGRG	PROJ ENGRG	~~GOVT~~

PRIORITY: C

DRAWING TITLE: BEAM PANEL INST. DESCENT STAGE ~ R.H. FORWARD

DRAWING NO.: LDW280-52528

EO NO.: B2

ISSUED BY R. FLANDERS 11-22-66 X1153

SECTION VEH. DES. INT.

GROUP NO. 335 PL 35

01

NAS 9-1100

B ＊

ENG 32.2 REV 3-66

GRUMMAN AIRCRAFT ENGINEERING CORP.
CODE IDENT NO. 26512
ENGINEERING ORDER

~~DWG.~~ NO. LEO 280 | EO NO. 423
CONTROL INFO NO. LM 5-11467

IN F/D & B/M : REMOVE LDW280-17400-11 FROM THE FOLLOWING DWGS:

RELEASED BY LIAISON

DWG NO.	＊ DASH NO.	TITLE	EFF.	CHG. NO
LDW280-28528	-5	-BEAM PANEL D/S R.H. FWD.	LM 1 (31)	C 7
-52528	-5		LM 2 (32)	B 3
-52528	-7		LM 3 (33)	
-54528	-5		LM 4 (34) THRU 15 (45)	C 1
-25530	-5	BEAM PANEL D/S L.H. FWD.	LM 1 (31)	C 3
-23530	-5		LM 2 (32) THRU 15 (45)	B 5
-28531	-5	~~BEAM PANEL D/S R.H. AFT.~~	LM 1 (31)	A 4
-52531	-1		LM 2 (32), LM 3 (33)	D 1
-54531	-1		LM 4 (34) THRU LM 15 (45)	C 5
-25533	-9	~~BEAM PANEL D/S L.H. AFT~~	LM 1 (31)	E 5
-23533	-5		LM 2 (32) LM 3 (33)	C 8
-54533	-1		LM 4 (34) THRU LM 15 (45)	C 3
-25534	-7	~~BEAM PANEL D/S FWD R.H~~	LM 1 (31)	C 6
-23534	-5		LM 2 (32) LM 3 (33)	C 5
-64534	-1		LM 4 (34) THRU LM 15 (45)	B 4
-25536	-5	~~BEAM PANEL D/S AFT. R.H.~~	LM 1 (31)	D 3
-23536	-9		LM 2 (32)	B 4
-23536	-5		LM 3 (33) THRU LM 15 (45)	
-51537	-1	~~BEAM PANEL D/S FWD L.H.~~	LM 1 (31)	B 2
-52537	-1		LM 2 (32) LM 3 (33)	B 5
-54537	-1		LM 4 (34) THRU LM 15 (45)	C 1
-25539	-5	BEAM PANEL D/S AFT L.H.	LM 1 (31)	C 5
-23539	-5		LM 2 (32) THRU LM 15 (45)	C 3

SHOP NOTE : PLUG HOLES WITH MS20470DD4.
(DO NOT INCORP ON DWG).

PRE-FEAT
REF LDW280-17400
CONT # 11466
(5)

DETAIL SPEC REQ ☐ | CL II ENGRG CHG ☐ | CL I ENGRG CHG ☐

REASON FOR EO: ELIMINATION OF LANDING GEAR BUNGEE SUPT. PER LCR 750

DESCRIPTION OF EO: ON ＊ INSTL : REMOVED LDW280-17400-11

GAEC EO RELEASE: E

MODEL	PROCURING ACTIVITY NO.	GAEC UNIT NO.	SUB CONTR UNIT NO.
LM		NOTED	

DRAWING CHANGE REQD: REVISE DWG ✓ | RECORD EO
DISPOSITION OF PARTS: REWORK ✓ | SCRAP

		SUPPORT	RELIAB. GROUP	GROUP LEADER	STRESS GROUP	LIAISON ENGRG	PROJ ENGRG	~~GOVT~~
APPROVED BY	WT			~	WDS	CH	[illegible]	[illegible]
DATE	12/19/66			~	12/19	12-19	12/27	12-19-66
/ /	VDI							

PRIORITY: C
DRAWING TITLE: NOTED
~~DRAWING NO.~~ LEO 280
EO NO. 423

ISSUED BY DON RAGAS X6454 SECTION VDI GROUP NO. 335 PL 5

01 NAS 9-1100

H.G
ENG 32.1 REV 3-65

GRUMMAN AIRCRAFT ENGINEERING CORP.
CODE IDENT NO. 26512
ENGINEERING ORDER

DWG. NO. LDW280-5252 | EO NO. B4
CONTROL INFO NO. LM-2-3182

THIS IS A REVISION OF EO-B2

"IN FLD/DWG & B/M ON -5 INSTL"
SHOULD BE
"IN FLD/DWG & B/M ON -5 & -7 INSTL'S"

2

DETAIL SPEC REQ		CL II ENGRG CHG		CL I ENGRG CHG	

REASON FOR EO
① NEW PARTS REQD FOR DIAGONAL TEE BRACING
② -7 INSTL CREATED BY EO-B1

REFERENCE EO-B2 DESCRIPTION OF EO
"ON LDW280-52528-5 & -7" WAS "ON LDW28-23534-5"

GAEC EO RELEASE C
R

MODEL	PROCURING ACTIVITY NO.	GAEC UNIT NO.	SUB CONTR UNIT NO.
LM		LM-2(32)	
		LM-3(33)	

DRAWING CHANGE REQD: REVISE DWG ✓ | RECORD EO
DISPOSITION OF PARTS: REWORK ✓ | SCRAP

APPROVED BY					caw	caw			
DATE	1/25				1/4/67	1/4/67		1/4/67	
-6-	VDI	SUPPORT	RELIAB. GROUP	GROUP LEADER	STRESS GROUP	LIAISON ENGRG	PROJ ENGRG	~~GOVT~~	

PRIORITY C
DRAWING TITLE BEAM PANEL INSTALLATION DESCENT STAGE~R.H. FORWARD
DRAWING NO. LDW280-52528
EO NO. B4

ISSUED BY LIAISON J. MALONEY 1/4/67 X3604 SECTION V.D.I. GROUP NO. 335 PL 35

01

NAS 9-1100

REVISIONS

CHANGE LTR	ITEM NO.	SHEET NO.	ZONE	GRUMMAN INFO ONLY	DET SPEC	CLASS I	CLASS II	ENGRG ORDER	DESCRIPTION	EFFECTIVITY	DISPOSITION OF EXISTING PARTS		CHANGED BY AND DATE	ENGRG APPD	GOVT APPD
											REWORK	SCRAP			
A	1	1.00, 1.10, 2.02, 2.03 2.04, 3, 4	6A 10B 8F		✓			EO A1	EO A1 INITIAL DRAWING RELEASE PART MADE PER EO.	LM-2 LM-3	NOT	REQD	JAEGGI 12-8-66		
	2	1.00, 2.03 2.04, 4.00	6E 7F		✓			EO A2	IN FLD OF DWG & B/M, ADDED LDW280M17676-1(1 REQD) LDW280M17679-2(1 REQD) & MS20470AD4(4) TO -1 PANEL INSTL.		✓				
	3	1.00, 2.02 3.00, 4.00	3F 4E 4F 9A				✓	EO A3	IN FLD/DWG & B/M, ON-1, LDW280-17619-11, 2 REQD WAS 1 REQD. LDW280M17229-12 WAS LDW280M17229-8. LDW280-17741-11 WAS LDW280-17254-17(ON-3). IN B/M LDW280-17608-19,-21,-23 WAS LDW280-17608-13,-15,-17 (ON-1). IN FLD/DWG & B/M LDW280-17741-17 WAS LDW280-17741-15 (ON-3). LDW280-17191-19 &-20 WAS LDW280-17191-11 &-12 (ON-3)						
	4	1.00, 2.00 3.00	6B		✓			EO A4	LDW280-17131-15 REPLACES LDW280-17131-13. ON-3						
	5	1.00, 2.03 5.00	10G		✓			EO A5	IN FLD/DWG & B/M, FOR-3, GR500A-6F(8)N.S., GF510C-6-4(8)F.S. WAS GR500A-6F(8)N.S. (8)F.S. & IN FLD ONLY FOR-3, ADDED .250 MIN. DIMENSION.						
B	1	1.00, 2.02 4.00			✓			EO B1	REF. EO A3, ON-3, IN FLD/DWG & B/M REMOVED LDW280-17741-11.						
	2	1.00, 2.02	3A		✓			EO B2	IN B/M, ON-1, ADDED LDW280M17459-2.		NOT	REQD			
	3	1.00, 2.04 4.00	8F		✓			EO B3	ON-1, IN FLD/DWG NAS1097DD5(2) WAS MS20470DD5(2). ADDED .180 MIN.		✓				
	4	1.00, 2.04 4.00, 5.00	8F 1G		✓			EO B4	IN FLD/DWG & B/M, FOR-1, GB511K-08-8(2) WAS GB511K-08-6(2), ADDED "SHIM AS REQD, .050 MAX., SEE NOTE 5" & VIEW AM-AM.						
	5	1.00, 2.02 3.00, 4.00	3,4E 10E 6,8D		✓			EO B5	ON-1, ADDED SHIMS(2), ON-3, ADDED C'BORE CALLOUT LDW280M17740-3 REPLACED LDW280M17740-1. LDW280-17741-17 REPLACED LDW280-17741-15.				EG		

FOR CONTINUATION OF REVISIONS SEE SHEET 1.11

GRUMMAN AIRCRAFT ENGRG CORP, BETHPAGE, L. I., NEW YORK

SIZE	CODE IDENT NO.		
B	26512	LDW280-52531	B
SCALE NONE			SHEET 1.10

ENG 77.3 5-65

01

NAS 9-1100

REVISIONS FOR CONTINUATION OF REVISIONS SEE SHEET 1.12

CHANGE LTR	ITEM NO.	SHEET NO.	ZONE	GRUMMAN INFO ONLY	DET SPEC	CLASS I	CLASS II	ENGRG ORDER	DESCRIPTION	EFFECTIVITY	DISPOSITION OF EXISTING PARTS		CHANGED BY AND DATE	ENGRG APPD	GOVT APPD
											REWORK	SCRAP			
B	6	1.00, 1.11, 2.02, 4.00	8E		✓			EO B6	ON-3, IN FLD/DWG & B/M: REPLACED LDW280-17195-21 WITH LDW280-17740-11 (ADDED SH 1.11)	LM-2 LM-3	✓				
	7	1.00, 1.11, 2.04, 5.00	1H		✓			EO B7	FOR-3 IN FLD/DWG & BM: ADDED NAS697A3 (2) & NAS1097AD3 (4). IN FLD. ADDED DRILL #11 (2 HOLES) & DIMENSIONS 2 7/8, 3/8 & 3/8.						
C	1	1.11, 4.00	4D		✓			EO C1	ON-3 IN FLD/DWG; MS20470DD4 (92) REPLACED GR500A4D (92)	LM-2 LM-3	✓		H. DEUTSCH 2-27-67		
	2	1.11, 2.03, 4.00	5F 7F		✓			EO C2	ON LDW280-52531-1, ADDED LDW280-18195-11 & -21. REMOVED LDW280M17676-1 & LDW280M17679-2 & MS20470AD4 (2) EG						
	3	1.11, 4.00	4D		✓				ADDED RIVET SPOTFACE ON LDW280-17193-21						
	4	1.11, 2.01, 4.00, 5.00	3F 5J		✓				REF EO A3: IN B/M ON-1, LDW280-17608-23 (2) WAS LDW280-17608-17 (1). LDW280-17608-11 (2) WAS LDW280-17608-11 (1). IN FLD.			✓			
	5	1.11, 3.00	3A		✓				IN FLD/DWG ON-1 ONLY, ADDED .868 ± .010 & RELOCATED .593 ± .010 DIM.		✓				
	6	1.11, 4.00	9E		✓				FOR-3, IN FLD/DWG REMOVED LDW280-17740-15 & -17 & ADDED LDW280-52795 (REF) 2 PLACES. ON-1 IN FLD MS20470DD4 (20) (ON-1) WAS (ON-3), MS20470DD4 (18) (ON-1) WAS (ON-3), MS20470DD4 (6) (ON-1) WAS (ON-3), MS20470DD5 (9) WAS (10), ADDED MS20470DD5 (1) (ON-1), LDW280-17740-19 (ON-1) WAS (ON-3).	LM-2 LM-3	✓				
	7	1.11, 3.00, 4.00, 5.00	4B 4D 10A 3H 3G 3J 9J		✓				IN FLD/DWG: LDW280-52900 INSTL WAS LDW280-23900 INSTL LDW280-52520 (REF) WAS LDW280-23520 (REF), LDW280-52524 WAS LDW280-23524 (REF)	LM-2 LM-3	NOT	REQ'D			
	8	1.11, 3.00							REF EO B5: ADDED NOTE 9. D.J.B.	NOTED					

CHG APPROVED

LTR	~~GROUP LDR~~	VEH DES INT	STRUCTURE	STRUCTURE	WEIGHTS
C		7/26/67	NM 3/6/67	7/26	

GRUMMAN AIRCRAFT ENGRG CORP., BETHPAGE, L. I., NEW YORK

SIZE	CODE IDENT NO.		
B	26512	LDW280-52531	C
SCALE NONE			SHEET 1.11

ENG 77.16 3-66

01

NAS 9-1100

LDW280-52531 D

LFM

MODEL OR END ITEM	NEXT ASSY	MODULE OR SER NO.	REQD PER MODULE OR END ITEM
LFM 107	LDW280-52510	LM-3(33)	1
PART NO. LDW280-52531-5		GAEC SCH NO.	

MODEL OR END ITEM	NEXT ASSY	MODULE OR SER NO.	REQD PER MODULE OR END ITEM
LM	LDW280-53510	LM-3(33)	1
LM	LDW280-52510	LM-2(32)	1
PART NO. LDW280-52531-1		GAEC SCH NO. 51-3	

MODEL OR END ITEM	NEXT ASSY	MODULE OR SER NO.	REQD PER MODULE OR END ITEM
PART NO.		GAEC SCH NO.	

WORK PKG FUNCTION NO. 110 (5)

SH REV STATUS: FOR DESCRIPTION OF REV SEE SUBQ SH

SHEET	1.00	1.10	1.11	1.12	2.00	2.01	2.02	2.03	2.04
REV	D	B	C	D	D	D	D	D	D
SHEET	3.00	4.00	5.00						
REV	D	D	D						
SHEET									
REV									

LAST SECT LTR USED AP
LAST DASH NO. USED -7

GRUMMAN REL INFO D
PRIM NO. 207 | JK(00) | MP-KD-45K

UNLESS OTHERWISE SPECIFIED DIMENSIONS ARE IN INCHES.
TOLERANCE UNLESS SPECIFIED
FRACTIONS - DECIMALS – ANGLES
±1/16 ±.020 ±1/2°
ORIG DWG AUTH
DETAIL SPEC REQUIREMENT
CLASS II ENGRG CHANGE
CLASS I ENGRG CHANGE

CONTRACT NO. NAS9-1100
LINE ITEM
DOCUMENTATION TYPE II
DRAWN BY N.JAEGGI 12/7/66
RELIABILITY
LAYOUT BY CLARK
CHECKED BY
~~GR LEADER~~
VEH DES INT [illegible] 3/6/67
STRUCTURE WJH 3/6/67
STRUCTURE JEB 3/6
WEIGHTS
PROJ ENGR [illegible]
REL GROUP Jaglewa 10/9/67

GRUMMAN AIRCRAFT ENGRG CORP
BETHPAGE, L. I., NEW YORK

PANEL INSTALLATION
DESCENT STAGE
R.H. AFT BEAM

SIZE B
CODE IDENT NO. 26512
LDW280-52531 D
SCALE NONE
SHEET 1.00 OF 12

1 12-65

D CDR 6-14-68

01

NAS 9-1100

REVISIONS

FOR CONTINUATION OF REVISIONS SEE SHEET ______

CHANGE LTR	ITEM NO.	SHEET NO.	ZONE	GRUMMAN INFO ONLY	DET SPEC	CLASS I	CLASS II	ENGRG ORDER	DESCRIPTION	EFFECTIVITY	DISPOSITION OF EXISTING PARTS		CHANGED BY AND DATE	ENGRG APPD	APPD
											REWORK	SCRAP			
C	9	2.01 2.02 3.00	5F 10F		✓				IN FLD & B/M, ON-3 REMOVED LDW280-17400-11 & LDW280M17260-1. ON-1 REMOVED LDW280-17345-11	LM-2 LM-3	✓		QUARLES 4-14-67	7-27	10/?/67
	10	2.00 3.00	5C		✓				ABC IN FLD & B/M ON-3 LDW280-17193-19 WAS LDW280-17193-13 O.J.						
D	1							LEO280-423	ON -1 INSTL: REMOVED LDW280-17400-11. NOTE: PREVIOUSLY ACCOMPLISHED ON CHANGE C9.	LM-2(32) LM-3(33)	✓		T.MACAULAY 5-8-68		
	2	3.00	10B						SECTION CALLOUT AN-AN AT ZONE 10B SH3 +Y38.483(REF) WAS AT ZONE 10C SH3 +Y48.475(REF) DWG ERROR CORRECTION.	NOT REQD	NOT	REQD		5/24/68	
	3	1, 2, 2.01 2.02, 2.03 2.04, 3, 4, 5		LFM 407		✓		LCD 2567 (4)	IN FLD & B/M ADDED -5 INSTL, -7 ASSY & ADDED SECT AP-AP. O.J.JK	LM-3 (33)	NOT	REQD			

LTR	GROUP LDR	VEH DES INT	STRUCTURE	WEIGHTS						
C		7/26	7/26							
D	5/22/68	JAS 5/23/68	5/24/68							

CHG APPROVED

ENG 77.16 3-66

GRUMMAN AIRCRAFT ENGRG CORP., BETHPAGE, L. I., NEW YORK

SIZE	CODE IDENT NO.		
B	26512	LDW280-52531	D

SCALE NONE

SHEET 1.12

01

NAS 9-1100

-7	-5	-3	-1	PART NO.	I&T	CODE IDENT	NOMENCLATURE OR DESCRIPTION	MATERIAL	GOVT SPEC	COML SPEC	STOCK SIZE	PROCESS SYM	FINISH NO.	ZONE
1		1		LDW280-17253-15	E		ANGLE	SEE DWG						8B
1		1		LDW280-17253-13			ANGLE							7E
1		1		LDW280-17253-11			ANGLE							7E
1		1		LDW280-17201-13			STIFFENER							7A
1		1		LDW280-17194-25			ANGLE							5E
1		1		LDW280-17194-23			ANGLE							5E
1		1		LDW280-17194-21			ANGLE							4E
1		1		LDW280-17193-21			ZEE							4C
1		1		LDW280-17193-15			ZEE							6C
1		1		LDW280-17193-19			ZEE							6D
1		1		LDW280-17192-17			DOUBLER							3D
1		1		LDW280-17191-20			STIFFENER							8E
1		1		LDW280-17191-19			STIFFENER							8E
1		1		LDW280-17164-11			CLIP							4E
1		1		LDW280-17131-15			WEB	SEE DWG						6B
	1			LDW280-52531-7			PANEL ASSEMBLY					NONE	NONE	6A
				-5			PANEL INSTALLATION					NONE	NONE	6A
			1	3			PANEL ASSEMBLY					NONE	NONE	6A
				LDW280-52531-1	E		PANEL INSTALLATION					NONE	NONE	6A

QTY PER ASSEMBLY

SYM OR NO.	PROCESS SYM OR FINISH NO.	GRUMMAN SPEC OR MILITARY SPEC	SYM OR NO.	PROCESS SYM OR FINISH NO.	GRUMMAN SPEC OR MILITARY SPEC	SYM OR NO.	PROCESS SYM OR FINISH NO.	GRUMMAN SPEC OR MILITARY SPEC
						76	ALODINE	LSP14-9010
						88	ANODIZE	LSP14-9030

I & T: IDENTIFICATION AND TRACEABILITY IN ACCORDANCE WITH NONE

GRUMMAN AIRCRAFT ENGRG CORP., BETHPAGE, L. I., NEW YORK

SIZE	CODE IDENT NO.		
B	26512	LDW280-52531	D

SCALE NONE

SHEET 2.00

ENG 77.2 5-64

01

NAS 9-1100

QTY PER ASSEMBLY				PART NO.	I&T	CODE IDENT	NOMENCLATURE OR DESCRIPTION	MATERIAL	GOVT SPEC	COML SPEC	STOCK SIZE	PROCESS SYM	FINISH NO.	ZONE
-7	-5	-3	-1											
1		1		LDW280-1760621	E		SPLICE	SEE DWG						10F
1		1		LDW280-1760619	E		SPLICE							10F
	1		1	LDW280-17611-23	E		SPLICE							3A
	1		1	LDW280-17611-21			SPLICE							3A
	2		2	LDW280-17608-23			SPLICE							3F
	1		1	-21										3F
	1		1	-19										3F
	2		2	LDW280-17608-11			SPLICE							3F
	1		1	LDW280-17607-13			SPLICE							9A
	1		1	LDW280-17607-11			SPLICE							9A
1		1		LDW280-17349-11			DOUBLER							3C
1		1		LDW280-17341-13			DOUBLER							3E
1		1		LDW280-17278-19			CLIP							4D
1		1		LDW280-17278-15			ZEE							4D
1		1		LDW280-17254-19			ANGLE							5E
1		1		-15										6E
1		1		-13										6E
1		1		LDW280-17254-11	E		ANGLE	SEE DWG						5E

SYM OR NO.	PROCESS SYM OR FINISH NO.	GRUMMAN SPEC OR MILITARY SPEC	SYM OR NO.	PROCESS SYM OR FINISH NO.	GRUMMAN SPEC OR MILITARY SPEC	SYM OR NO.	PROCESS SYM OR FINISH NO.	GRUMMAN SPEC OR MILITARY SPEC

I & T: IDENTIFICATION AND TRACEABILITY IN ACCORDANCE WITH NONE

GRUMMAN AIRCRAFT ENGRG CORP., BETHPAGE, L. I., NEW YORK

SIZE	CODE IDENT NO.		
B	26512	LDW280-52531	D

SCALE NONE

SHEET 201

ENG 77.2 5-64

01

NAS 9-1100

QTY PER ASSEMBLY -7	-5	-3	-1	PART NO.	I&T	CODE IDENT	NOMENCLATURE OR DESCRIPTION	MATERIAL	GOVT SPEC	COML SPEC	STOCK SIZE	PROCESS SYM	FINISH NO.	ZONE
	1		1	LDW280M17419-7	E		PIN	SEE DWG						10F
1		1		LDW280M17417-4			ANGLE							3B
1		1		LDW280M17647-1			FITTING							7E
1		1		LDW280M17408-2			CAP STRIP							9B
1		1		LDW280-18195-21			CLIP							9F
1		1		LDW280-18195-11			CLIP							5F
	1		1	LDW280-17740-19			ANGLE							7F
1		1		LDW280-17740-11			ANGLE							8E
1		1		LDW280M17229-12			SUPPORT							4E
	1		1	LDW280M17459-2			ANGLE							3A
1		1		LDW280M17228-8			SUPPORT							4F
1				LDW280-18538-13			PLATE							
1		1		LDW280M17186-1			SUPPORT							7F
1		1		LDW280-17741-17			STIFFENER							4E
1		1		LDW280-17741-13			STIFFENER							4E
1		1		LDW280-17738-20			CLIP							10E
1		1		-19										10E
1		1		-18										10E
1		1		-17										10E
1		1		-16										10E
1		1		-15										10E
1		1		-14										10E
1		1		-13			CLIP							10E
4		4		LDW280-17738-11			PLATE							10E
1		1		LDW280-17730-11			CLIP							10E
1		1		LDW280-17687-11			ANGLE							5B
	2		2	LDW280-17619-11	E		SPLICE	SEE DWG						9A

SYM OR NO.	PROCESS SYM OR FINISH NO.	GRUMMAN SPEC OR MILITARY SPEC	SYM OR NO.	PROCESS SYM OR FINISH NO.	GRUMMAN SPEC OR MILITARY SPEC	SYM OR NO.	PROCESS SYM OR FINISH NO.	GRUMMAN SPEC OR MILITARY SPEC

I & T: IDENTIFICATION AND TRACEABILITY IN ACCORDANCE WITH NONE

GRUMMAN AIRCRAFT ENGRG CORP., BETHPAGE, L. I., NEW YORK

SIZE	CODE IDENT NO.		
B	26512	LDW280-52531	D

SCALE NONE

SHEET 202

ENG 77.2 5-64

01

NAS 9-1100

-7	-5	-3	-1	PART NO.	I&T	CODE IDENT	NOMENCLATURE OR DESCRIPTION	MATERIAL	GOVT SPEC	COML SPEC	STOCK SIZE	PROCESS SYM	FINISH NO.	ZONE
8		8		GF510C-6-4	E		FASTENER-BLIND	GRUMMAN STD						
40		40		GR500A-6F			RIVET	GRUMMAN STD						
2		2		GR500A-4C			RIVET	GRUMMAN STD						
				SHIM			SEE NOTE 5							
	4		4	LDW280M17672-1			RADIUS BLOCK	SEE DWG						7F
1		1		LDW280M17648-1			FITTING							6A
1		1		LDW280M17644-1										9D
1		1		LDW280M17643-1										9B
1		1		LDW280M17642-1			FITTING							8F
	1		1	LDW280M17602-1			WASHER							10F
1		1		LDW280M17440-3	E		FITTING	SEE DWG						31

QTY PER ASSEMBLY

SYM OR NO.	PROCESS SYM OR FINISH NO.	GRUMMAN SPEC OR MILITARY SPEC	SYM OR NO.	PROCESS SYM OR FINISH NO.	GRUMMAN SPEC OR MILITARY SPEC	SYM OR NO.	PROCESS SYM OR FINISH NO.	GRUMMAN SPEC OR MILITARY SPEC

I & T: IDENTIFICATION AND TRACEABILITY IN ACCORDANCE WITH NONE

GRUMMAN AIRCRAFT ENGRG CORP., BETHPAGE, L. I., NEW YORK

SIZE	CODE IDENT NO.		
B	26512	LDW280-52531	D
SCALE NONE		SHEET 2.03	

ENG 77.2 5-64

01 NAS 9-1100

QTY PER ASSEMBLY -7	-5	-3	-1	PART NO.	I&T	CODE IDENT	NOMENCLATURE OR DESCRIPTION	MATERIAL	GOVT SPEC	COML SPEC	STOCK SIZE	PROCESS SYM	FINISH NO.	ZONE
				NAS1097DD5	E		RIVET							
				NAS1097A3			SCREW							
2		2		NAS697A3			NUT, PLATE							
1		1		MS21043-4			NUT							
				MS20470DD6			RIVET							
				MS20470DD5										
				MS20470DD4										
				MS20470AD4			RIVET	STD PART						
	8		8	GN512H-5			COLLAR	GRUMMAN STD						
	14		14	-4										
	20		20	-3										
6	20	6	20	GN512H-08			COLLAR							
	8		8	GB511K-5-6			BOLT							
	8		8	-4-8										
	4		4	-4-4										
	8		8	-3-6										
	5		5	-3-4										
	1		1	-3-3										
	2		2	-08-6										
	2		2	-08-5										
4	16	4	16	-08-4										
2		2		GB511K-08-3	E		BOLT	GRUMMAN STD						

SYM OR NO.	PROCESS SYM OR FINISH NO.	GRUMMAN SPEC OR MILITARY SPEC	SYM OR NO.	PROCESS SYM OR FINISH NO.	GRUMMAN SPEC OR MILITARY SPEC	SYM OR NO.	PROCESS SYM OR FINISH NO.	GRUMMAN SPEC OR MILITARY SPEC

I & T: IDENTIFICATION AND TRACEABILITY IN ACCORDANCE WITH NONE

GRUMMAN AIRCRAFT ENGRG CORP., BETHPAGE, L. I., NEW YORK

SIZE B | CODE IDENT NO. 26512 | LDW280-52531 | D

SCALE NONE | SHEET 204

ENG 77.2 5-64

01 NAS 9-1100

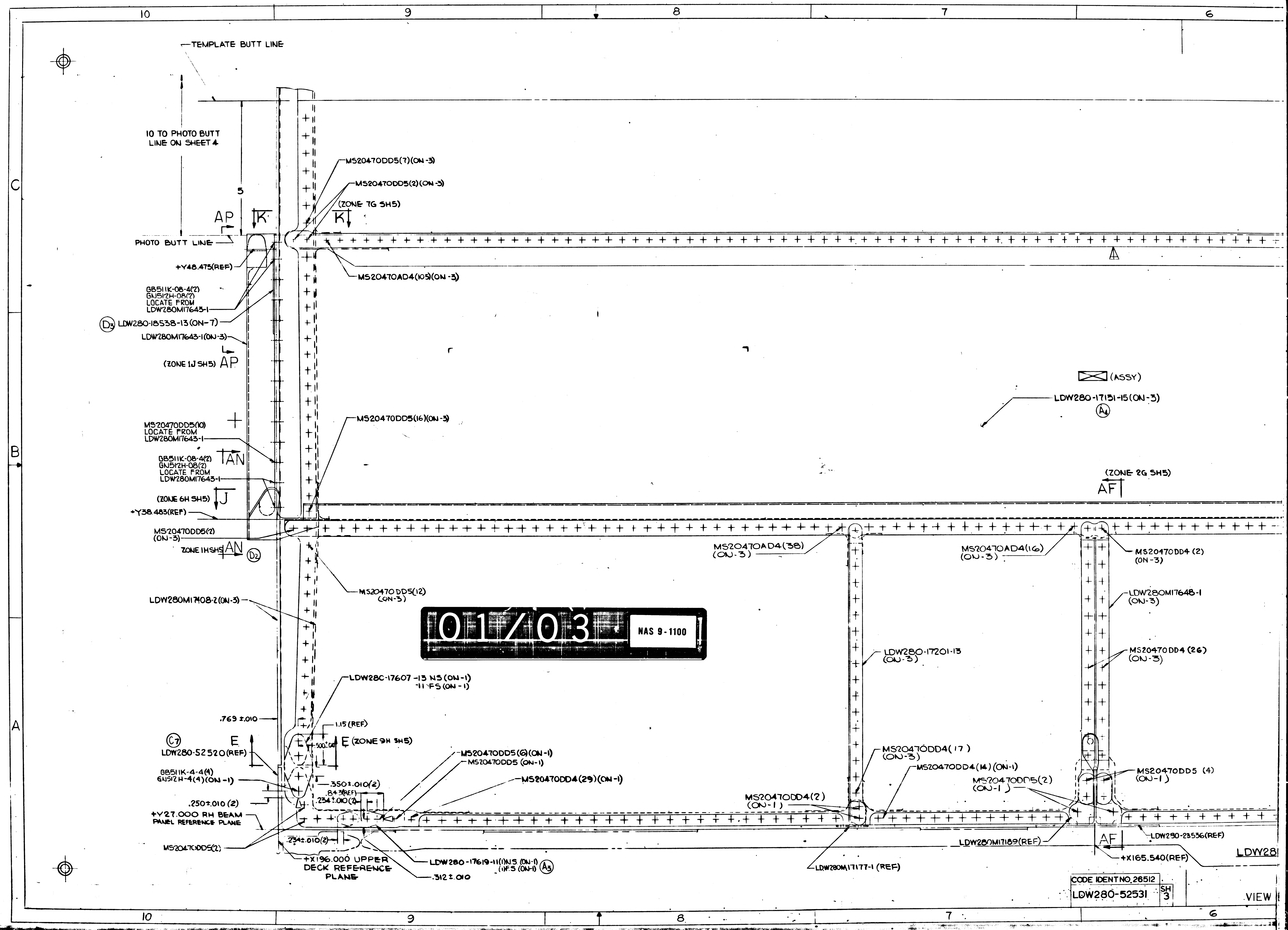
10
9
8
7
6
C
B
A
TEMPLATE BUTT LINE
10 TO PHOTO BUTT LINE ON SHEET 4
5
AP
K
K
PHOTO BUTT LINE
MS20470DD5(7)(ON-3)
MS20470DD5(2)(ON-3)
(ZONE 7G SH5)
MS20470AD4(105)(ON-3)
+Y48.475(REF)
GB511K-08-4(2)
GN512H-08(2)
LOCATE FROM
LDW280M17643-1
D3 LDW280-18538-13(ON-7)
LDW280M17643-1(ON-3)
(ZONE 1J SH5) AP
(ASSY)
LDW280-17131-15(ON-3)
A4
MS20470DD5(16)(ON-3)
MS20470DD5(10)
LOCATE FROM
LDW280M17643-1
GB511K-08-4(2)
GN512H-08(2)
LOCATE FROM
LDW280M17643-1
AN
(ZONE 6H SH5) J
+Y38.483(REF)
(ZONE 2G SH5)
AF
MS20470DD5(2)
(ON-3)
ZONE 1H SH5 AN
D2
MS20470AD4(38)
(ON-3)
MS20470AD4(16)
(ON-3)
MS20470DD4 (2)
(ON-3)
MS20470DD5(12)
(ON-3)
LDW280M17408-2(ON-3)
LDW280M17648-1
(ON-3)
LDW280-17201-13
(ON-3)
MS20470DD4 (26)
(ON-3)
LDW280-17607-13 NS (ON-1)
-11 FS (ON-1)
.769 ±.010
1.15 (REF)
C7
LDW280-52520(REF)
E
.500±.010
E (ZONE 9H SH5)
MS20470DD5(6)(ON-1)
MS20470DD5 (ON-1)
MS20470DD4(17)
(ON-3)
MS20470DD4(14)(ON-1)
MS20470DD5(2)
(ON-1)
MS20470DD5 (4)
(ON-1)
GB511K-4-4(4)
GN512H-4(4)(ON-1)
.350±.010(2)
.843(REF)
.234±.010(2)
MS20470DD4(29)(ON-1)
MS20470DD4(2)
(ON-1)
.250±.010 (2)
+Y27.000 RH BEAM
PANEL REFERENCE PLANE
MS20470DD5(2)
.234±.010(2)
+X196.000 UPPER
DECK REFERENCE
PLANE
LDW280-17619-11(1)NS (ON-1)
(1)FS (ON-1)
A3
.312±.010
LDW280M17177-1 (REF)
LDW280M17189(REF)
LDW280-23536(REF)
AF
+X165.540(REF)
LDW28

01/03

NAS 9-1100

CODE IDENT NO. 26512	SH
LDW280-52531	3

VIEW

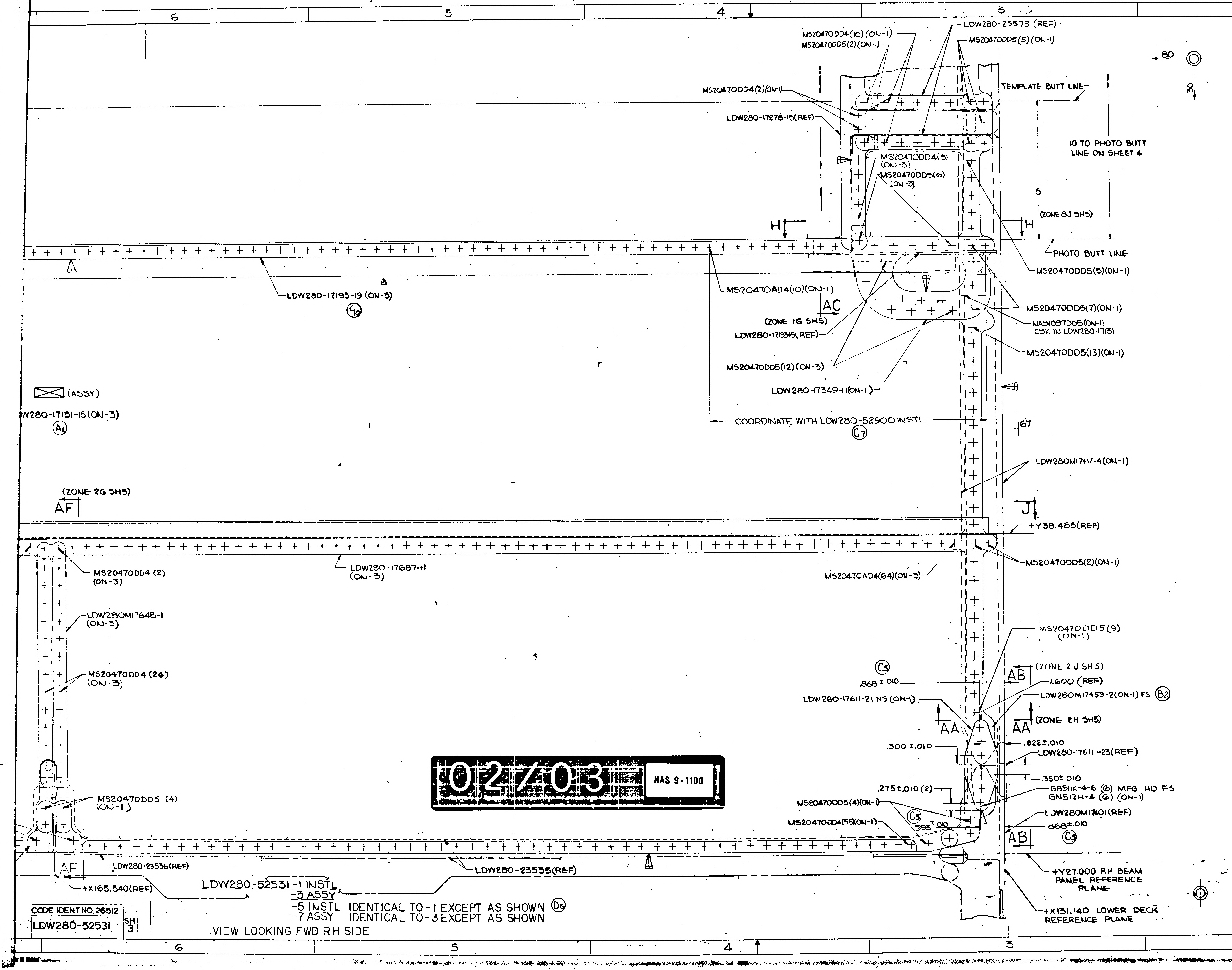
6
5
4
3
2
MS20470DD4(10)(ON-1)
MS20470DD5(2)(ON-1)
LDW280-23573 (REF)
MS20470DD5(5)(ON-1)
80
8
MS20470DD4(2)(ON-1)
TEMPLATE BUTT LINE
LDW280-17278-15(REF)
10 TO PHOTO BUTT LINE ON SHEET 4
MS20470DD4(5) (ON-3)
MS20470DD5(6) (ON-3)
5
(ZONE 8J SH5)
H
H
PHOTO BUTT LINE
MS20470DD5(5)(ON-1)
LDW280-17193-19 (ON-3)
C19
MS20470AD4(10)(ON-1)
AC
(ZONE 1G SH5)
MS20470DD5(7)(ON-1)
NAS1097DD5(ON-1) CSK IN LDW280-17131
LDW280-17193-15(REF)
MS20470DD5(13)(ON-1)
MS20470DD5(12) (ON-3)
LDW280-17349-11(ON-1)
(ASSY)
LDW280-17131-15(ON-3)
A4
COORDINATE WITH LDW280-52900 INSTL
C7
67
LDW280M17417-4(ON-1)
(ZONE 2G SH5)
AF
J
+Y38.483(REF)
MS20470DD4 (2) (ON-3)
LDW280-17687-11 (ON-3)
MS2047CAD4(64)(ON-3)
MS20470DD5(2)(ON-1)
LDW280M17648-1 (ON-3)
MS20470DD4 (26) (ON-3)
MS20470DD5(9) (ON-1)
C5
.868 ±.010
AB
(ZONE 2 J SH 5)
1.600 (REF)
LDW280M17459-2(ON-1) FS
B2
LDW280-17611-21 NS (ON-1)
AA
AA
(ZONE 2H SH5)
.300 ±.010
.822±.010
LDW280-17611-23(REF)
.350±.010
MS20470DD5 (4) (ON-1)
.275±.010 (2)
GB511K-4-6 (6) MFG HD FS
GN512H-4 (6) (ON-1)
MS20470DD5(4)(ON-1)
C5
MS20470DD4(55)(ON-1)
.593±.010
LDW280M17401(REF)
.868±.010
AB
C5
AF
LDW280-23536(REF)
LDW280-23535(REF)
+X165.540(REF)
+Y27.000 RH BEAM PANEL REFERENCE PLANE
+X131.140 LOWER DECK REFERENCE PLANE
6
5
4
3

LDW280-52531-1 INSTL
-3 ASSY
-5 INSTL IDENTICAL TO -1 EXCEPT AS SHOWN D5
-7 ASSY IDENTICAL TO -3 EXCEPT AS SHOWN

VIEW LOOKING FWD RH SIDE

02/03 NAS 9-1100

CODE IDENT NO. 26512
LDW280-52531 SH 3

NOTES:

1. PERMISSIBLE OIL CAN DEPTH OF WEBS BETWE
2. TOLERANCE UN LINES MARKED ◄ TO BE ± 1/32,
3. TOLERANCE ON LOFTED LOCATION OF FASTENERS TO BE ± 1/32
4. INSTALL FASTENERS PER:
LSP14-15302
LSP 14-15303
LSP14-15306
5. SHIM AS REQD USING AL ALLOY QQ-A-250/4, 2024T FINISH 88
6. NO TOOLING HOLES PERMITTED IN PART
7. FOR BASIC JIG DATA SEE LDW280-23511
8. FASTENER MANUFACTURED HEAD (OTHER THA ATTACHMENTS) TO BE ON WEB SIDE UNLES
9. MAINTAIN MIN. THICKNESS OF ADJACENT CHEM-M FINISH C'BORE #76.

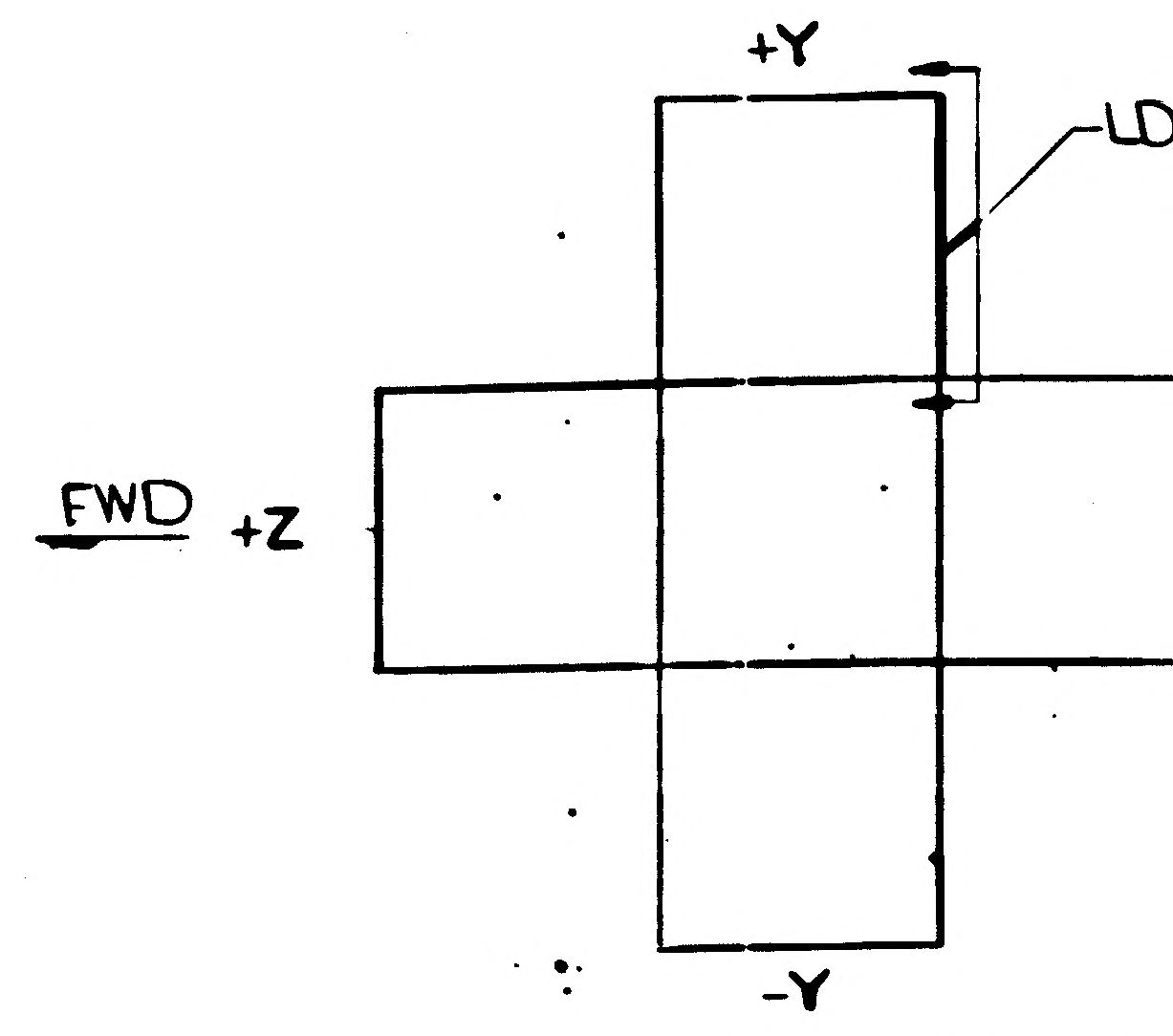

FOR ENGR REF ONLY NO

CODE IDENT NO. 26512
LDW280-52531 SH 3

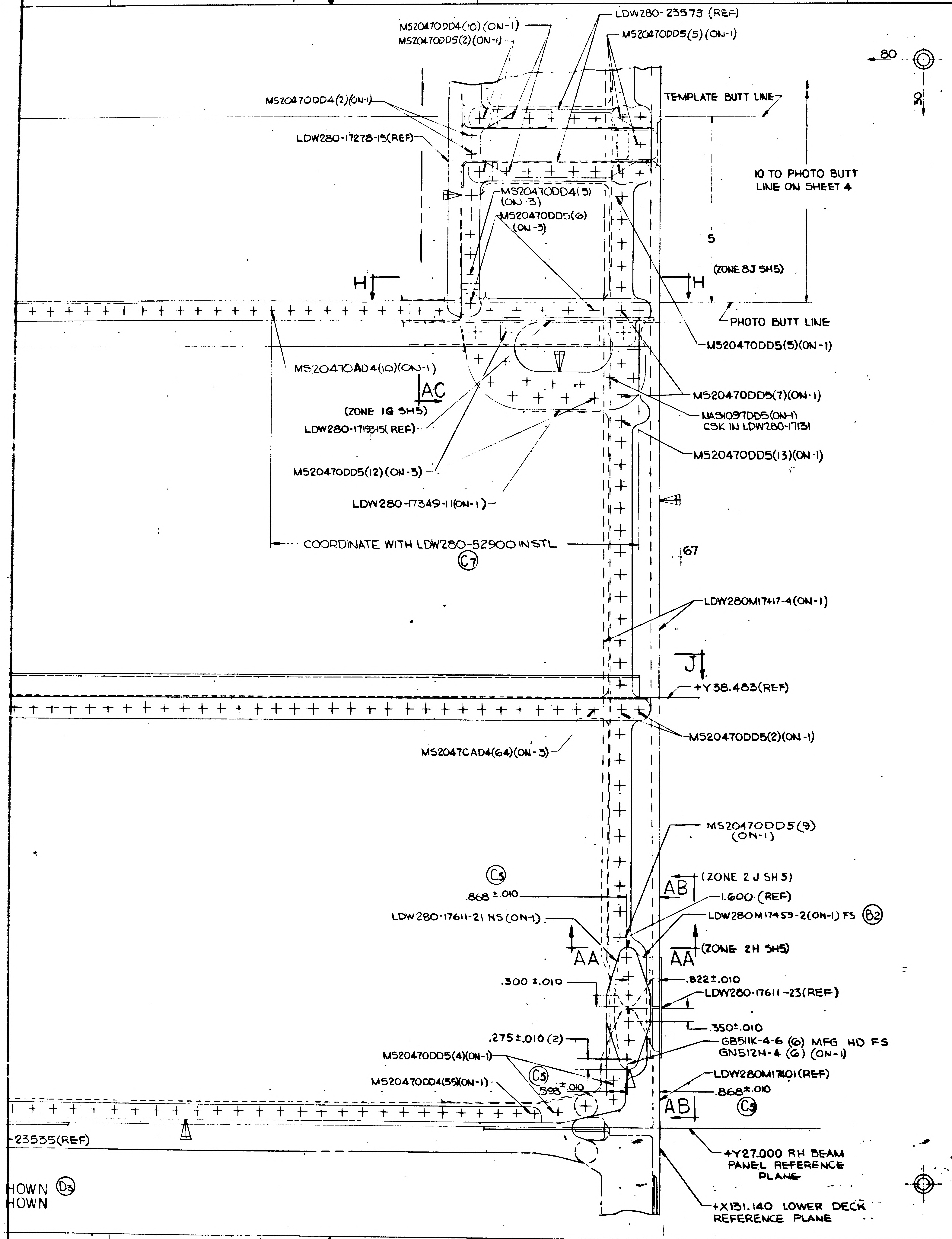
LDW280-23573 (REF)
MS20470DD4(10) (ON-1)
MS20470DD5(2) (ON-1)
MS20470DD5(5) (ON-1)
80
30
MS20470DD4(2)(ON-1)
TEMPLATE BUTT LINE
LDW280-17278-15(REF)
10 TO PHOTO BUTT LINE ON SHEET 4
MS20470DD4(5) (ON-3)
MS20470DD5(6) (ON-3)
5
(ZONE 8J SH5)
H
H
PHOTO BUTT LINE
MS20470DD5(5)(ON-1)
MS20470AD4(10)(ON-1)
AC
(ZONE 1G SH5)
MS20470DD5(7)(ON-1)
NAS1097DD5(ON-1) CSK IN LDW280-17131
LDW280-17193-15(REF)
MS20470DD5(13)(ON-1)
MS20470DD5(12) (ON-3)
LDW280-17349-11(ON-1)
COORDINATE WITH LDW280-52900 INSTL
C7
67
LDW280M17417-4(ON-1)
J
+Y38.483(REF)
MS20470DD5(2)(ON-1)
MS2047CAD4(64)(ON-3)
MS20470DD5(9) (ON-1)
C5
.868 ±.010
AB
(ZONE 2 J SH 5)
1.600 (REF)
LDW280-17611-21 NS (ON-1)
LDW280M17459-2(ON-1) FS
B2
AA
AA
(ZONE 2H SH5)
.300 ±.010
.822±.010
LDW280-17611-23(REF)
.350±.010
.275±.010 (2)
GB511K-4-6 (6) MFG HD FS
GN512H-4 (6) (ON-1)
MS20470DD5(4)(ON-1)
C5
MS20470DD4(55)(ON-1)
.593 ±.010
LDW280M17401(REF)
.868±.010
AB
C5
-23535(REF)
+Y27.000 RH BEAM PANEL REFERENCE PLANE
HOWN D3
HOWN
+X131.140 LOWER DECK REFERENCE PLANE

NOTES:

1. PERMISSIBLE OIL CAN DEPTH OF WEBS BETWEEN STIFFENERS IS ±.100
2. TOLERANCE ON LINES MARKED ◄ TO BE ± 1/32, & ◁ TO BE ± 1/64
3. TOLERANCE ON LOFTED LOCATION OF FASTENERS TO BE ± 1/32
4. INSTALL FASTENERS PER:
   LSP14-15302
   LSP 14-15303
   LSP14-15306
5. SHIM AS REQD USING AL ALLOY QQ-A-250/4, 2024T3, FINISH 88
6. NO TOOLING HOLES PERMITTED IN PART
7. FOR BASIC JIG DATA SEE LDW280-23511
8. FASTENER MANUFACTURED HEAD (OTHER THAN CSK ATTACHMENTS) TO BE ON WEB SIDE UNLESS OTHERWISE SPECIFIED.
9. MAINTAIN MIN. THICKNESS OF ADJACENT CHEM-MILLED LAND. FINISH C'BORE #76.

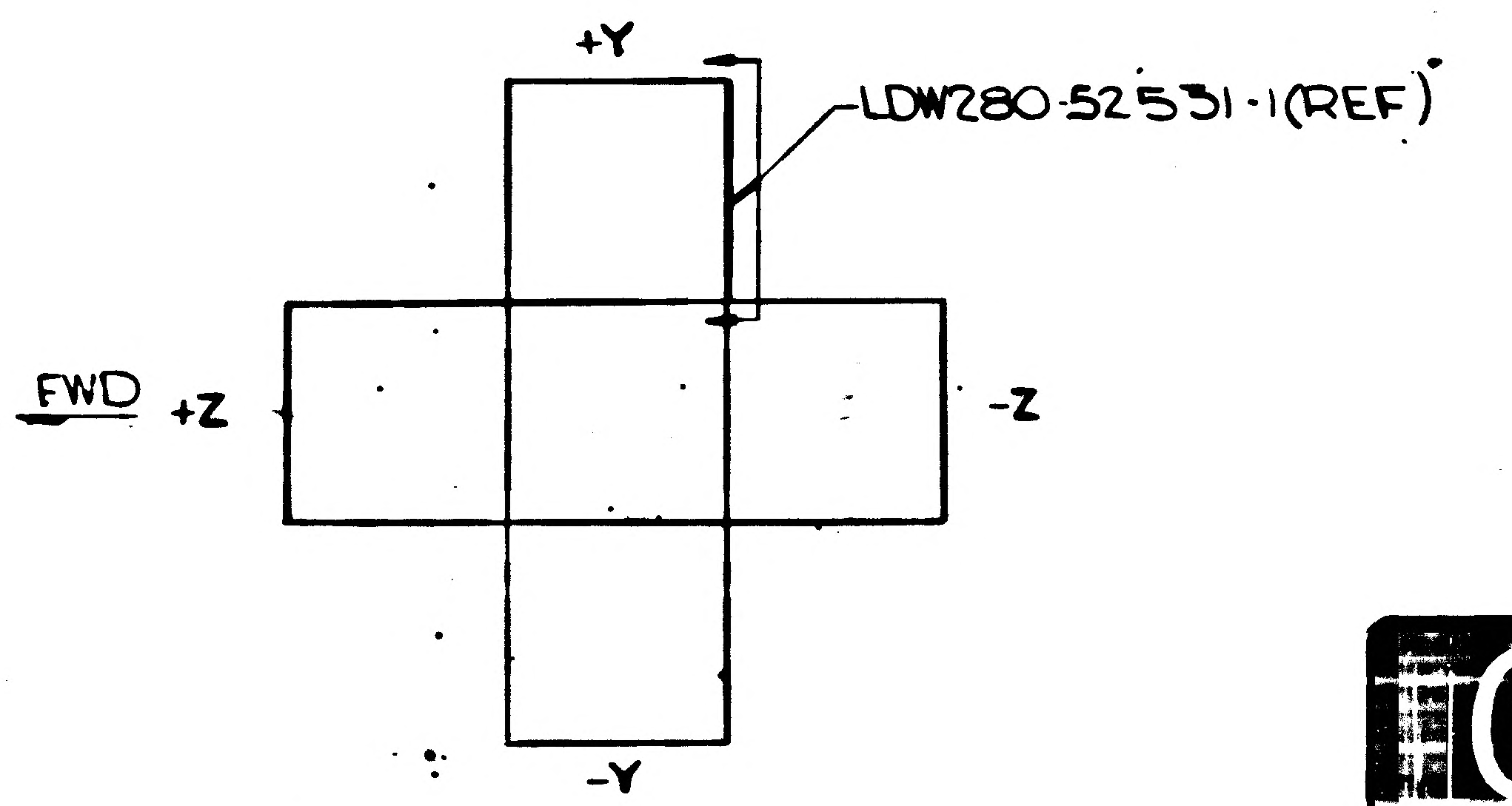
+Y
LDW280-52531-1(REF)
FWD +Z
-Z
-Y

FOR ENGR REF ONLY NO SCALE

MANUFACTURING OPERATIONS UNLESS OTHERWISE SPECIFIED NOTES CHECKED ✓ APPLY TO THIS DWG.	
RUBBER STAMP PART NUMBER AND ALL OTHER MARKINGS IN REGION MARKED ☒ USE BOTH SIDES IF NECESSARY.	✓
FILLET AND INSIDE CORNER RADII TOLERANCES .016R TO .062R ± .010 .063R TO .250R ± .015 OVER .250R ± .030	
DEPTH SHOWN FOR TAPPED HOLES IS FULL THDS. 2-3 IMP. THDS. BEYOND PERMISSIBLE	
EXTERNAL THREAD LENGTH SHOWN INCLUDES 2 IMPERFECT THREADS MAX.	
DO NOT CADMIUM PLATE & PAINT HOLES OR SURFACES MARKED WITH DOUBLE ASTERISK.	
MISMATCH STEP OF ± .005 PERMISSIBLE DUE TO CHANGE OF CUTTERS AT INSIDE INTERSECTING SURFACES.	
DIAMETERS MARKED MUST BE CONCENTRIC WITHIN FULL INDICATOR READING.	
HOLES MUST BE KEPT FREE OF CHROME PLATING SOLUTION.	
ALL DIMENSIONS SHOWN TO BE MET AFTER CADMIUM PLATING. THICKNESS OF PLATE .0003 MIN TO .0005 MAX. MIN THICKNESS TO BE .0002 ON THREADED AREAS. NO ALLOWANCES FOR PLATING IN HOLES	
125 √ SURFACE ROUGHNESS INCLUDING REAMED HOLES PER MIL-STD-10	
200 √ FOR ALL DRILLED HOLES	
REMOVE ALL BURRS. BREAK ALL EDGES .015-.031	
INSPECTION INFORMATION MINIMUM PERMISSIBLE EDGE DISTANCE IS 1.5 FASTENER DIA FROM FASTENER ℄	✓
SYMBOL √ DENOTES SURFACE TO BE MACHINED	
UNLESS OTHERWISE SPECIFIED TOLERANCE ON FLANGES IS ± 1/32	
LENGTHS OF AN, NAS & MS AL ALY RIVETS SHORTER THAN 1 INCH ARE NOT SPECIFIED	
TOLERANCE ON LOFTED DELINEATIONS IS ± 1/16 (UNLESS OTHERWISE NOTED)	✓

DWG SIZE 34 x 106

PRINTING INFO ONLY

FULL SIZE SHEET AREA (34 x 106) = 27.0 SQ FT.

LDW280-52531D

03/03 NAS 9-1100

CODE IDENT NO. 26512

LDW280-52531 SH 3

	GRUMMAN AIRCRAFT ENGRG CORP. BETHPAGE, L. I., NEW YORK
LM	SIZE J · CODE IDENT NO. 26512 · LDW280-52531 · D
MODEL OR END ITEM	SCALE FULL · SHEET 3.00

FOR PHOTO REPRODUCTION 2 FRAMES

THIS IS AN ORIGINAL DWG

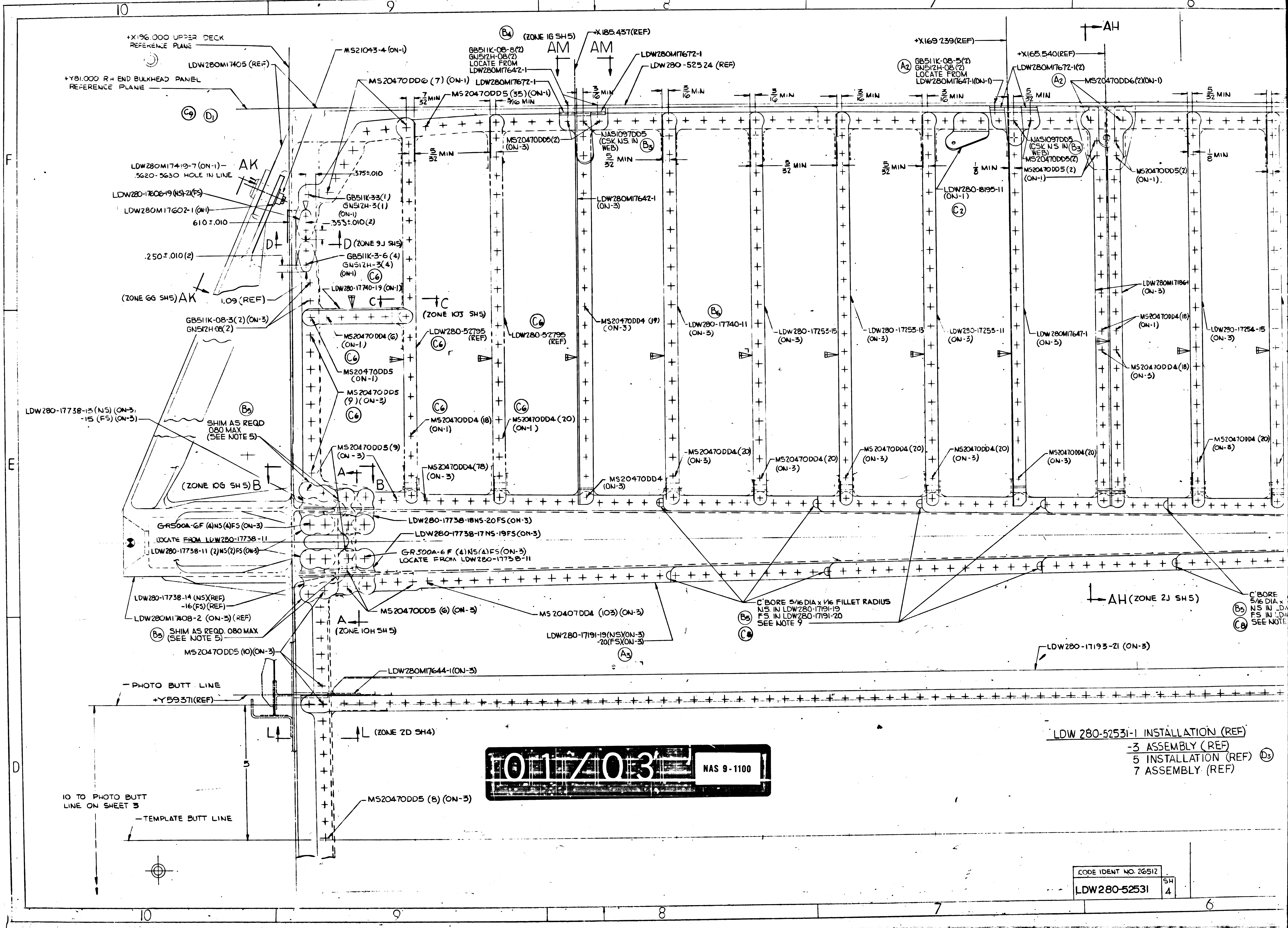

10
9
8
7
6
F
E
D
+X196.000 UPPER DECK REFERENCE PLANE
MS21043-4 (ON-1)
LDW280M17405 (REF)
+Y81.000 RH END BULKHEAD PANEL REFERENCE PLANE
C9
D1
(B4) (ZONE 16 SH5)
+X185.437(REF)
AM
AM
GB511K-08-8(2)
GN512H-08(2)
LOCATE FROM
LDW280M17642-1
LDW280M17672-1
LDW280-52524 (REF)
MS20470DD6 (7) (ON-1)
7/32 MIN
MS20470DD5 (35) (ON-1)
3/16 MIN
3/16 MIN
5/32 MIN
MS20470DD5(2)
(ON-3)
NAS1097DD5
(CSK N.S. IN WEB)
B3
5/32 MIN
3/16 MIN
3/16 MIN
+X169.239(REF)
A2
GB511K-08-5(2)
GN512H-08(2)
LOCATE FROM
LDW280M17647-1(ON-1)
LDW280M17672-1(2)
+X165.540(REF)
AH
A2
MS20470DD6(2)(ON-1)
5/32 MIN
5/32 MIN
3/16 MIN
5/32 MIN
5/32 MIN
1/8 MIN
LDW280-18195-11
(ON-1)
C2
NAS1097DD5
(CSK N.S IN WEB)
B3
MS20470DD5(2)
MS20470DD5 (2)
(ON-1)
MS20470DD5(2)
(ON-1).
1/8 MIN
LDW280M17419-7 (ON-1)
.5620-.5630 HOLE IN LINE
AK
LDW280-17606-19 (NS)-21(FS)
LDW280M17602-1 (ON-1)
.610±.010
.375±.010
GB511K-3-3(1)
GN512H-3(1)
(ON-1)
.353±.010(2)
D
D (ZONE 9J SH5)
.250±.010(2)
GB511K-3-6 (4)
GN512H-3(4)
(ON-1)
C6
LDW280-17740-19 (ON-1)
(ZONE 6G SH5) AK
1.09 (REF)
C
C
(ZONE 10J SH5)
GB511K-08-3(2) (ON-3)
GN512H-08(2)
MS20470DD4 (6)
(ON-1)
C6
MS20470DD5
(ON-1)
MS20470DD5
(9) (ON-3)
C6
LDW280-52795
(REF)
C6
LDW280-52795
(REF)
C6
LDW280M17642-1
(ON-3)
MS20470DD4 (19)
(ON-3)
B6
LDW280-17740-11
(ON-3)
LDW280-17253-15
(ON-3)
LDW280-17253-13
(ON-3)
LDW280-17253-11
(ON-3)
LDW280M17647-1
(ON-3)
LDW280M17186-1
(ON-3)
MS20470DD4(18)
(ON-1)
MS20470DD4(18)
(ON-3)
LDW280-17254-15
(ON-3)
LDW280-17738-13 (NS) (ON-3)
-15 (FS) (ON-3)
B5
SHIM AS REQD
.080 MAX
(SEE NOTE 5)
C6
MS20470DD4 (18)
(ON-1)
C6
MS20470DD4 (20)
(ON-1)
MS20470DD4(20)
(ON-3)
MS20470DD4 (20)
(ON-3)
MS20470DD4 (20)
(ON-3)
MS20470DD4(20)
(ON-3)
MS20470DD4(20)
(ON-3)
MS20470DD4 (20)
(ON-3)
MS20470DD5 (9)
(ON-3)
MS20470DD4(78)
(ON-3)
MS20470DD4
(ON-3)
(ZONE 10G SH5) B
A
B
LDW280-17738-18NS-20FS (ON-3)
LDW280-17738-17NS-19FS (ON-3)
GR500A-6F (4)NS(4)FS (ON-3)
LOCATE FROM LDW280-17738-11
LDW280-17738-11 (2)NS(2)FS (ON-3)
GR500A-6F (4)NS(4)FS (ON-3)
LOCATE FROM LDW280-17738-11
LDW280-17738-14 (NS)(REF)
-16 (FS) (REF)
LDW280M17408-2 (ON-3) (REF)
MS20470DD5 (6) (ON-3)
MS20407DD4 (103) (ON-3)
C'BORE 5/16 DIA x 1/16 FILLET RADIUS
N.S. IN LDW280-17191-19
F.S. IN LDW280-17191-20
SEE NOTE 9
B5
C8
AH (ZONE 2J SH5)
C'BORE
5/16 DIA x
NS IN LDW
FS IN LDW
SEE NOTE
B5
C8
B5
SHIM AS REQD .080 MAX
(SEE NOTE 5)
A
(ZONE 10H SH5)
LDW280-17191-19 (NS)(ON-3)
-20 (FS)(ON-3)
A3
MS20470DD5 (10)(ON-3)
LDW280-17193-21 (ON-3)
LDW280M17644-1 (ON-3)
PHOTO BUTT LINE
+Y59.371(REF)
L
L (ZONE 2D SH4)
5
10 TO PHOTO BUTT
LINE ON SHEET 3
TEMPLATE BUTT LINE
MS20470DD5 (8) (ON-3)

LDW 280-52531-1 INSTALLATION (REF)
-3 ASSEMBLY (REF)
5 INSTALLATION (REF) D3
7 ASSEMBLY (REF)

01/03 NAS 9-1100

CODE IDENT NO. 26512	SH
LDW280-52531	4

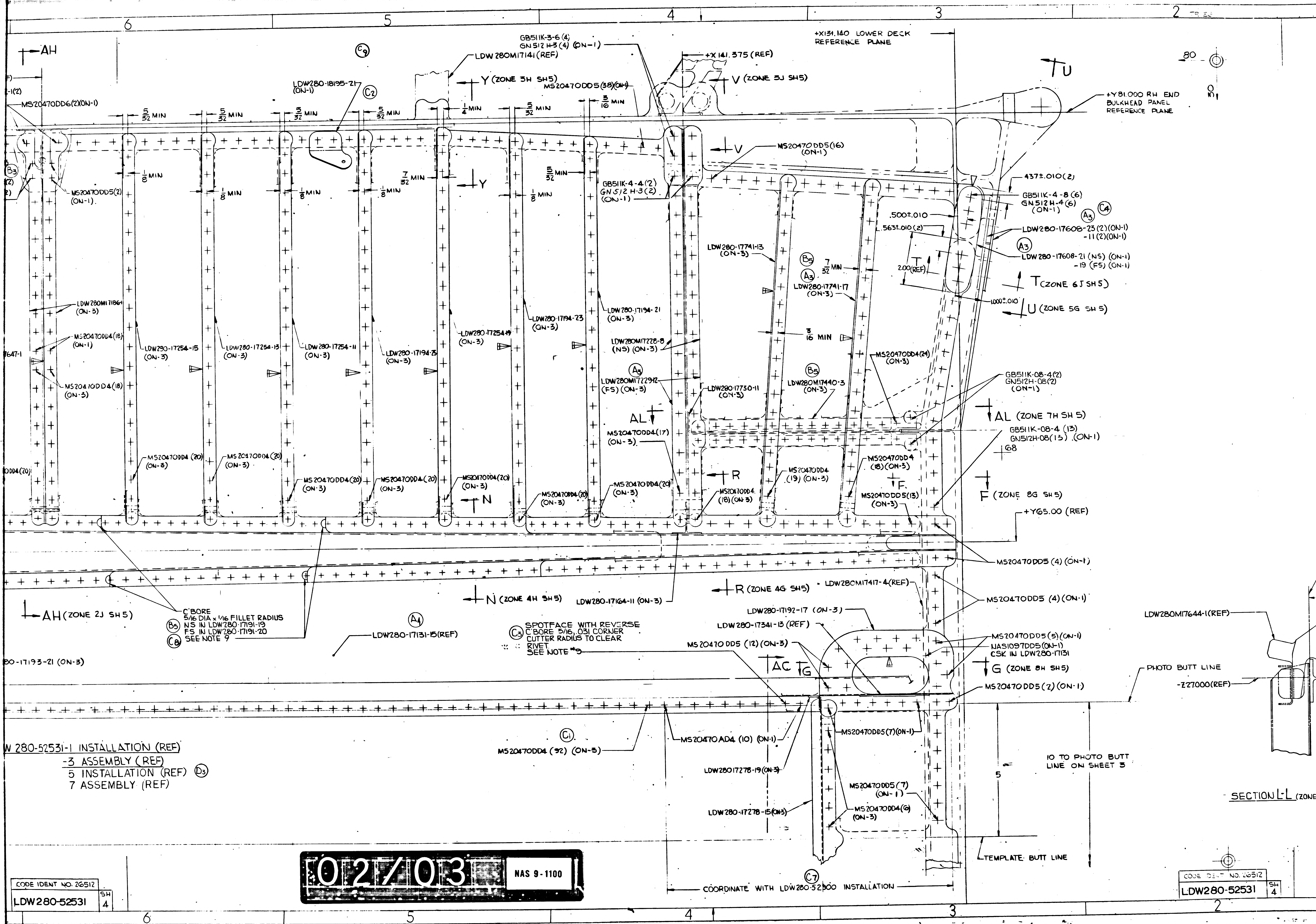

6
5
4
3
2
AH
C9
LDW280M17141(REF)
GB511K-3-6(4)
GN512 H-3(4) (ON-1)
+X141.375 (REF)
+X131.140 LOWER DECK REFERENCE PLANE
Y (ZONE 3H SH5)
V (ZONE 5J SH5)
U
MS20470DD5(38)(ON-1)
LDW280-18195-21 (ON-1)
C2
MS20470DD6(2)(ON-1)
5/32 MIN
1/4 MIN
3/16 MIN
+Y81.000 RH END BULKHEAD PANEL REFERENCE PLANE
.80
B3
1/8 MIN
7/32 MIN
5/32 MIN
MS20470DD5(2) (ON-1)
Y
V
MS20470DD5(16) (ON-1)
GB511K-4-4(2)
GN512 H-3(2)
(ON-1)
.437±.010(2)
GB511K-4-8(6)
GN512H-4(6)
(ON-1)
C4
A3
.500±.010
.563±.010(2)
LDW280-17608-23(2)(ON-1)
-11(2)(ON-1)
A3
LDW280-17608-21 (NS) (ON-1)
-19 (FS) (ON-1)
LDW280-17741-13 (ON-3)
B5
A3
7/32 MIN
LDW280-17741-17 (ON-3)
2.00(REF)
T (ZONE 6J SH5)
1.000±.010
U (ZONE 5G SH5)
LDW280M17186-1 (ON-3)
MS20470DD4(18) (ON-1)
LDW280-17254-15 (ON-3)
LDW280-17254-13 (ON-3)
LDW280-17254-11 (ON-3)
LDW280-17194-25 (ON-3)
LDW280-17254-19 (ON-3)
LDW280-17194-23 (ON-3)
LDW280-17194-21 (ON-3)
LDW280M17228-8 (NS) (ON-3)
3/16 MIN
MS20470DD4(24) (ON-3)
7647-1
MS20470DD4(18) (ON-3)
A3
LDW280M17229-12 (FS) (ON-3)
LDW280-17730-11 (ON-3)
B5
LDW280M17440-3 (ON-3)
GB511K-08-4(2)
GN512H-08(2)
(ON-1)
AL
AL (ZONE 7H SH 5)
GB511K-08-4 (13)
GN512H-08(13) (ON-1)
MS20470DD4(17) (ON-3)
68
MS20470DD4 (20) (ON-3)
MS20470DD4(20) (ON-3)
MS20470DD4(20) (ON-3)
MS20470DD4(20) (ON-3)
MS20470DD4(20) (ON-3)
MS20470DD4(20) (ON-3)
MS20470DD4(20) (ON-3)
MS20470DD4 (19) (ON-3)
MS20470DD4 (18)(ON-3)
MS20470DD4 (18)(ON-3)
MS20470DD5(13) (ON-3)
DD4(20)
R
N
F
F (ZONE 8G SH5)
+Y65.00 (REF)
MS20470DD5 (4) (ON-1)
MS20470DD5 (4) (ON-1)
AH (ZONE 2J SH5)
C'BORE
5/16 DIA x 1/16 FILLET RADIUS
B5 NS IN LDW280-17191-19
FS IN LDW280-17191-20
C8 SEE NOTE 9
N (ZONE 4H SH5)
LDW280-17164-11 (ON-3)
R (ZONE 4G SH5)
LDW280M17417-4(REF)
A4
LDW280-17131-15(REF)
C3 SPOTFACE WITH REVERSE C'BORE 5/16, .031 CORNER CUTTER RADIUS TO CLEAR RIVET. SEE NOTE 9
LDW280-17192-17 (ON-3)
LDW280-17341-13 (REF)
MS20470DD5 (12) (ON-3)
MS20470DD5(5)(ON-1)
NAS1097DD5(ON-1)
CSK IN LDW280-17131
LDW280M17644-1(REF)
80-17193-21 (ON-3)
AC
G
G (ZONE 8H SH5)
PHOTO BUTT LINE
MS20470DD5(2) (ON-1)
-Z27000(REF)
C1
MS20470DD4 (92) (ON-3)
MS20470AD4 (10) (ON-1)
MS20470DD5(7)(ON-1)
10 TO PHOTO BUTT LINE ON SHEET 3
LDW280-17278-19(ON-3)
5
MS20470DD5(7) (ON-1)
SECTION L-L (ZONE
LDW280-17278-15(ON-3)
MS20470DD4(9) (ON-3)
TEMPLATE BUTT LINE
C7
COORDINATE WITH LDW280-52300 INSTALLATION

W 280-52531-1 INSTALLATION (REF)
-3 ASSEMBLY (REF)
5 INSTALLATION (REF) D3
7 ASSEMBLY (REF)

02/03
NAS 9-1100

CODE IDENT NO. 26512	
LDW280-52531	SH 4

CODE IDENT NO. 26512	
LDW280-52531	SH 4

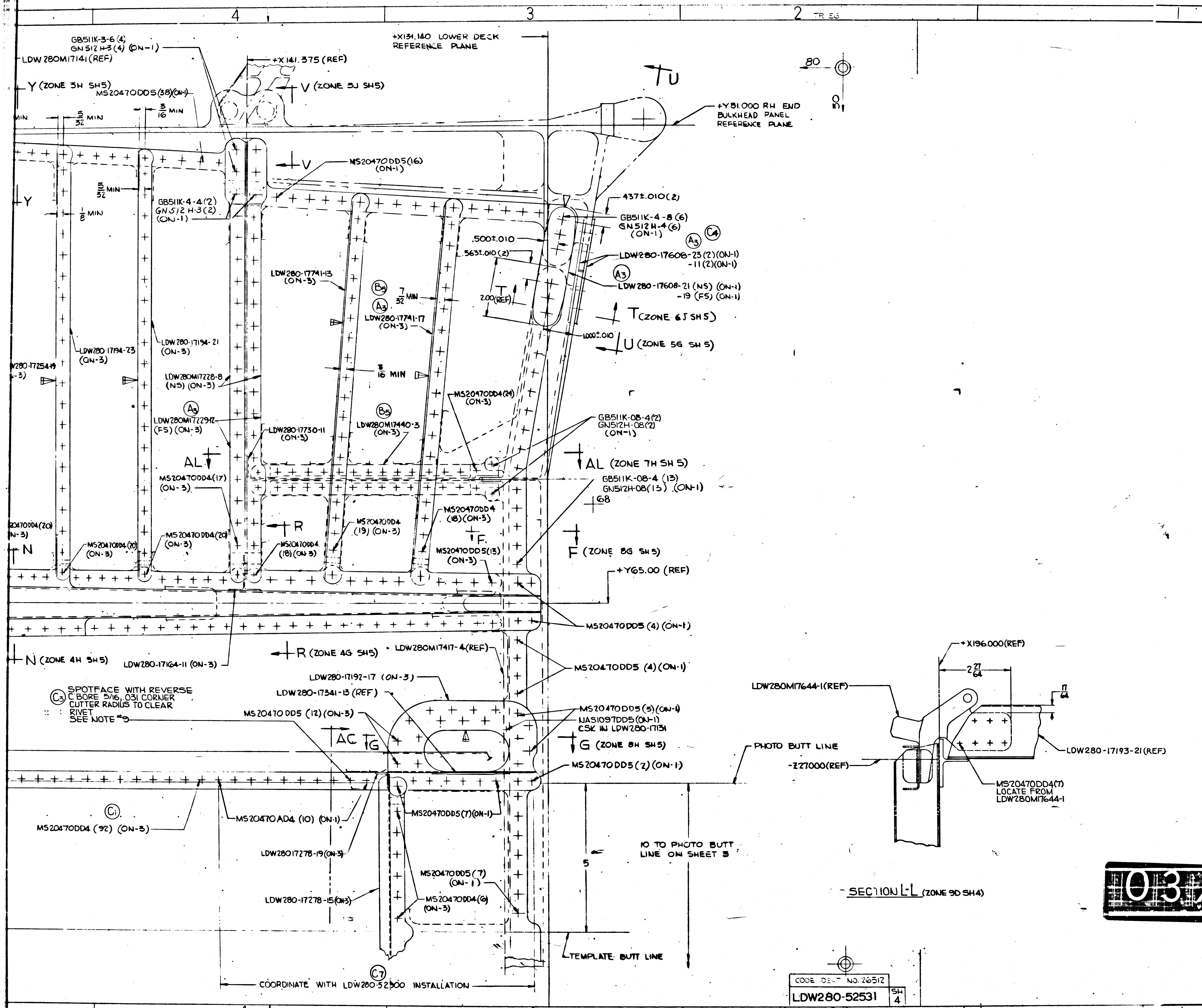
4
3
2
1
GB511K-3-6 (4)
GN512H-3 (4) (ON-1)
LDW280M17141 (REF)
Y (ZONE 3H SH5)
+X141.375 (REF)
MS20470DD5 (38)(ON-1)
V (ZONE 3J SH5)
+X131.140 LOWER DECK REFERENCE PLANE
5/32 MIN
3/16 MIN
MIN
TU
+Y81.000 RH END BULKHEAD PANEL REFERENCE PLANE
80
V
MS20470DD5 (16) (ON-1)
5/32 MIN
1/8 MIN
Y
GB511K-4-4 (2)
GN512H-3 (2) (ON-1)
.437±.010 (2)
GB511K-4-8 (6)
GN512H-4 (6) (ON-1)
A3
C4
.500±.010
.563±.010 (2)
LDW280-17608-23 (2) (ON-1)
-11 (2) (ON-1)
A3
LDW280-17608-21 (NS) (ON-1)
-19 (FS) (ON-1)
LDW280-17741-13 (ON-3)
B9
7/32 MIN
A3
LDW280-17741-17 (ON-3)
2.00 (REF)
T (ZONE 6J SH5)
1.000±.010
U (ZONE 5G SH5)
LDW280-17194-23 (ON-3)
LDW280-17194-21 (ON-3)
W280-17254-19 (ON-3)
LDW280M17228-8 (NS) (ON-3)
3/16 MIN
MS20470DD4 (24) (ON-3)
A3
LDW280M17229-12 (FS) (ON-3)
LDW280-17730-11 (ON-3)
B5
LDW280M17440-3 (ON-3)
GB511K-08-4 (2)
GN512H-08 (2) (ON-1)
AL
AL (ZONE 7H SH5)
GB511K-08-4 (13)
GN512H-08 (13) (ON-1)
MS20470DD4 (17) (ON-3)
68
MS20470DD4 (18) (ON-3)
R
MS20470DD4 (19) (ON-3)
F
F (ZONE 8G SH5)
MS20470DD4 (20) (ON-3)
MS20470DD4 (20) (ON-3)
MS20470DD4 (20) (ON-3)
MS20470DD4 (18) (ON-3)
MS20470DD5 (13) (ON-3)
N
+Y65.00 (REF)
MS20470DD5 (4) (ON-1)
N (ZONE 4H SH5)
LDW280-17164-11 (ON-3)
R (ZONE 4G SH5)
LDW280M17417-4 (REF)
MS20470DD5 (4) (ON-1)
LDW280-17192-17 (ON-3)
LDW280-17341-13 (REF)
C3 SPOTFACE WITH REVERSE C BORE 5/16, .031 CORNER CUTTER RADIUS TO CLEAR RIVET SEE NOTE *5
MS20470DD5 (12) (ON-3)
MS20470DD5 (5) (ON-1)
NAS1097DD5 (ON-1) CSK IN LDW280-17131
AC
G
G (ZONE 8H SH5)
MS20470DD5 (2) (ON-1)
C1
MS20470DD4 (92) (ON-3)
MS20470AD4 (10) (ON-1)
MS20470DD5 (7) (ON-1)
LDW280-17278-19 (ON-3)
MS20470DD5 (7) (ON-1)
MS20470DD4 (6) (ON-3)
LDW280-17278-15 (ON-3)
5
10 TO PHOTO BUTT LINE ON SHEET 3
TEMPLATE BUTT LINE
C7
COORDINATE WITH LDW280-52300 INSTALLATION
+X196.000 (REF)
2 27/64
17/64
LDW280M17644-1 (REF)
PHOTO BUTT LINE
-Z27.000 (REF)
LDW280-17193-21 (REF)
MS20470DD4 (7) LOCATE FROM LDW280M17644-1
SECTION L-L (ZONE 9D SH4)
F
E
D
LDW280-52531 D
LDW280-52531 D

03/03

NAS 9-1100

MANUFACTURING OPERATIONS

UNLESS OTHERWISE SPECIFIED NOTES CHECKED √ APPLY TO THIS DWG.

PART NUMBER AND ALL OTHER MARKINGS IN REGION MARKED ☒ USE BOTH SIDES IF NECESSARY.

FILLET AND INSIDE CORNER RADII TOLERANCES
.016R TO .062R ± .010
.063R TO .250R ± .015
OVER .250R ± .030

DEPTH SHOWN FOR TAPPED HOLES IS FULL THDS. 2-3 IMP THDS. BEYOND PERMISSIBLE.

EXTERNAL THREAD LENGTH SHOWN INCLUDES 2 IMPERFECT THREADS MAX.

DO NOT CADMIUM PLATE & PAINT HOLES OR SURFACES MARKED WITH DOUBLE ASTERISK.

MISMATCH STEP OF ± .005 PERMISSIBLE DUE TO CHANGE OF CUTTERS AT INSIDE INTERSECTING SURFACES.

DIAMETERS MARKED MUST BE CONCENTRIC WITHIN FULL INDICATOR READING

HOLES MUST BE KEPT FREE OF CHROME PLATING SOLUTION.

ALL DIMENSIONS SHOWN TO BE MET AFTER CADMIUM PLATING. THICKNESS OF PLATE .0003 MIN. TO .0005 MAX. MIN. THICKNESS TO BE .0002 ON THREADED AREAS. NO ALLOWANCE FOR PLATING IN HOLES

125 SURFACE ROUGHNESS INCLUDING REAMED HOLES PER MIL-STD-10

250 FOR ALL DRILLED HOLES

REMOVE ALL BURRS. BREAK ALL EDGES .015-.031

INSPECTION INFORMATION MINIMUM PERMISSIBLE AVERAGE EDGE DISTANCE MARKED IS

SYMBOL ƒ DENOTES SURFACE TO BE MACHINED

UNLESS OTHERWISE SPECIFIED TOLERANCE ON FLANGES IS ± 1/32

LENGTHS OF AN, NAS & MS AL ALY RIVETS SHORTER THAN 1 INCH ARE NOT SPECIFIED.

TOLERANCE ON LOFTED DELINEATIONS IS

DWG SIZE 34 X 106

CODE IDENT NO. 26512
LDW280-52531 SH 4

	GRUMMAN AIRCRAFT ENGRG CORP., BETHPAGE, L. I., NEW YORK			
LM	SIZE J	CODE IDENT NO. 26512	LDW280-52531	D
MODEL OR ENG ITEM	SCALE FULL		SHEET 4.00	

FOR PHOTO REPRODUCTION

THIS IS AN ORIGINAL DWG 8 FRAMES

10 9 8 7 6

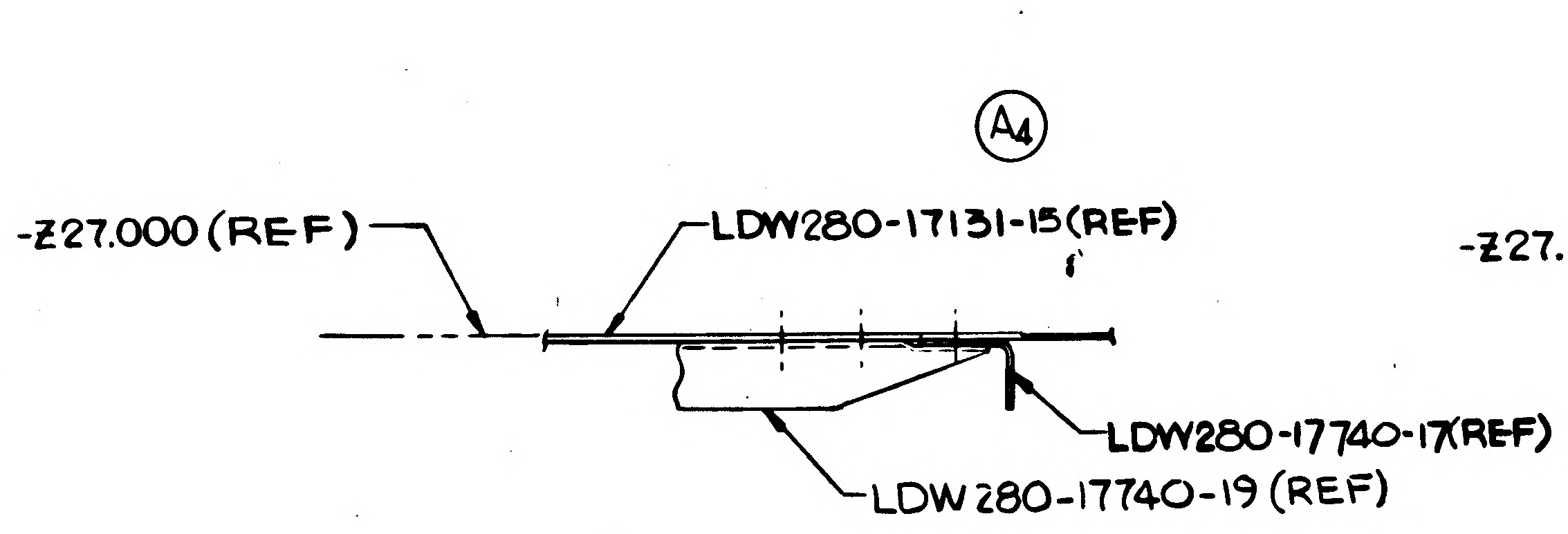
A4
-Z27.000 (REF)
LDW280-17131-15(REF)
LDW280-17740-17(REF)
LDW 280-17740-19 (REF)

SECTION C-C (ZONE 9F SH4)

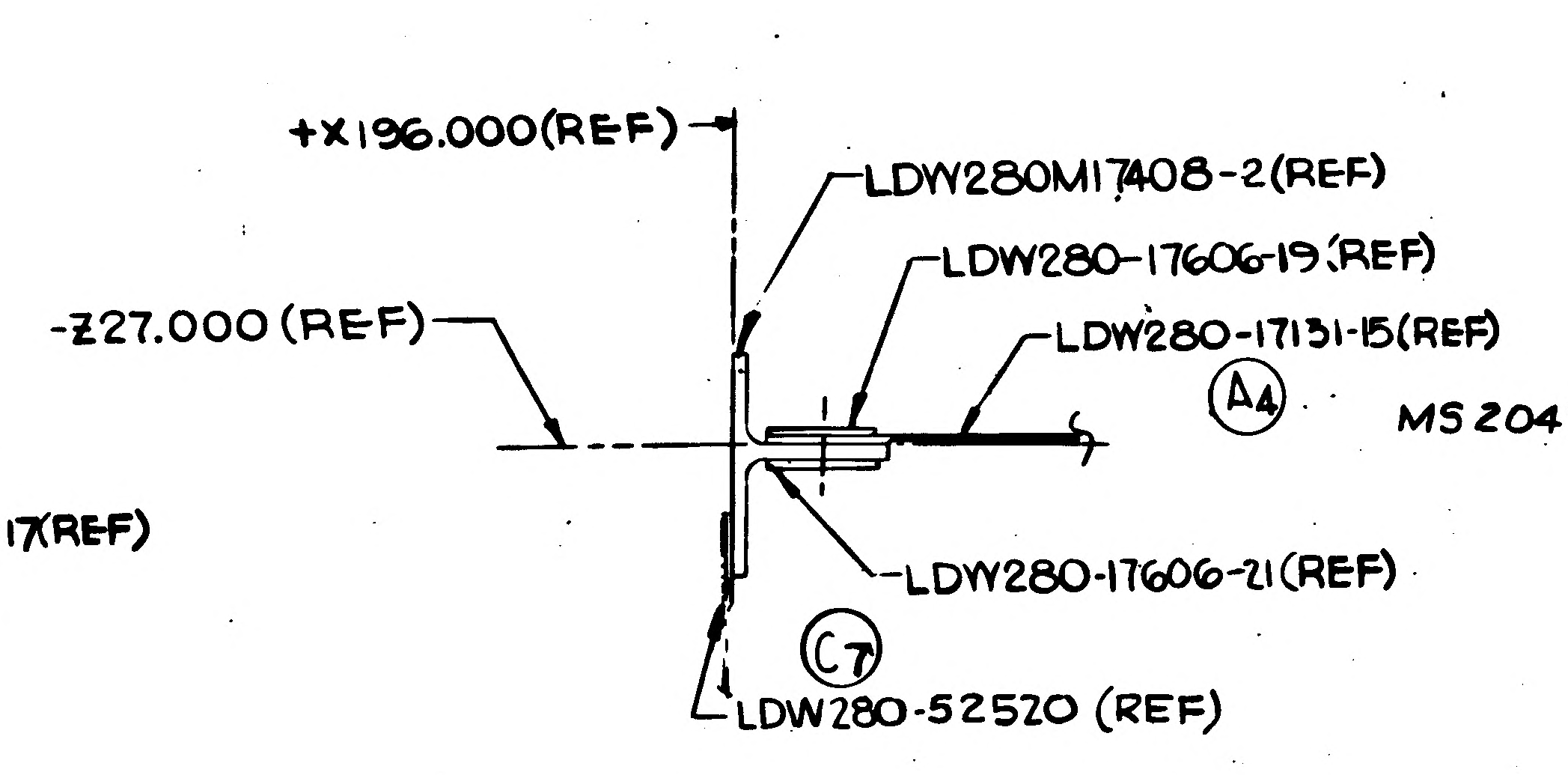
+X196.000(REF)
LDW280M17408-2(REF)
LDW280-17606-19(REF)
-Z27.000 (REF)
LDW280-17131-15(REF)
A4
LDW280-17606-21(REF)
C7
LDW280-52520 (REF)

SECTION D-D (ZONE 9F SH4)

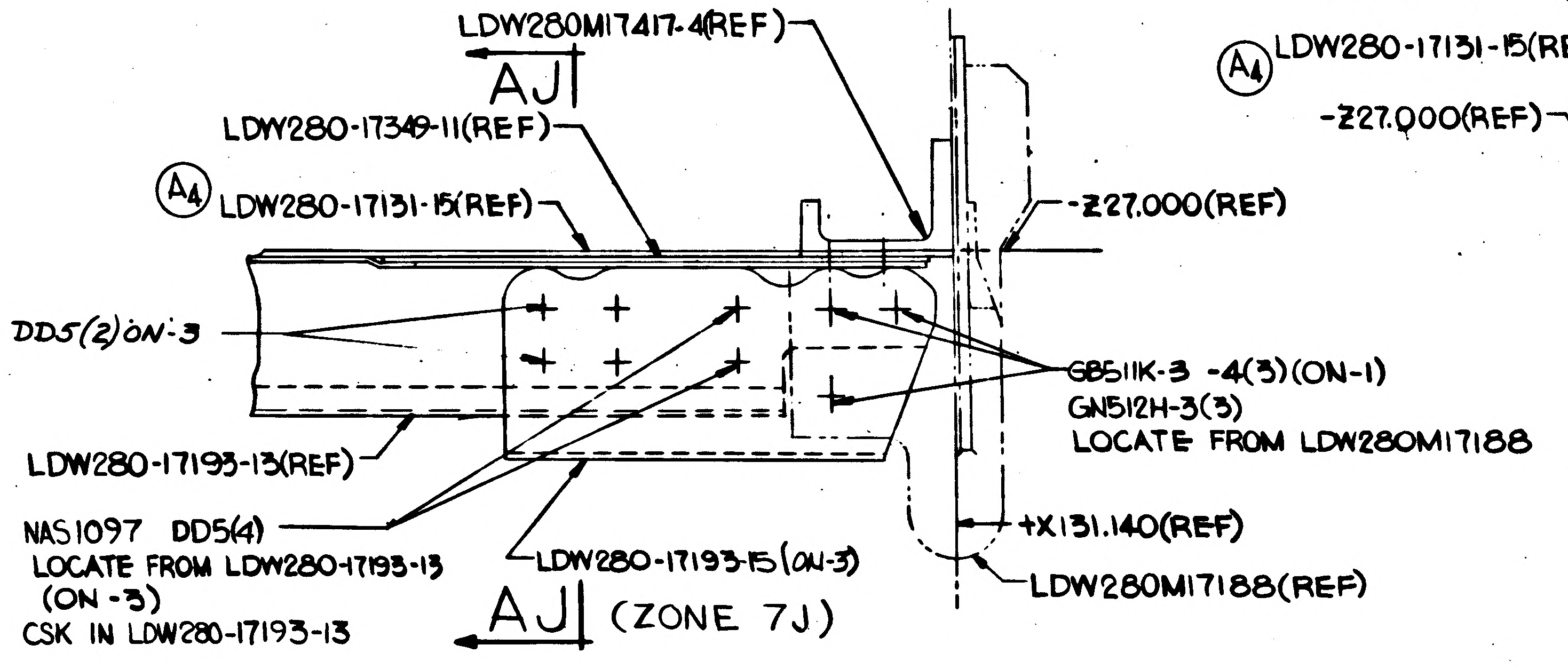
LDW280M17417-4(REF)
AJ
LDW280-17349-11(REF)
A4 LDW280-17131-15(REF)
-Z27.000(REF)
MS 20470 DD5(2) ON-3
GB511K-3 -4(3)(ON-1)
GN512H-3(3)
LOCATE FROM LDW280M17188
LDW280-17193-13(REF)
NAS1097 DD5(4)
LOCATE FROM LDW280-17193-13
(ON-3)
CSK IN LDW280-17193-13
LDW280-17193-15 (ON-3)
+X131.140(REF)
LDW280M17188(REF)
AJ (ZONE 7J)

SECTION H-H (ZONE 3C SH3)

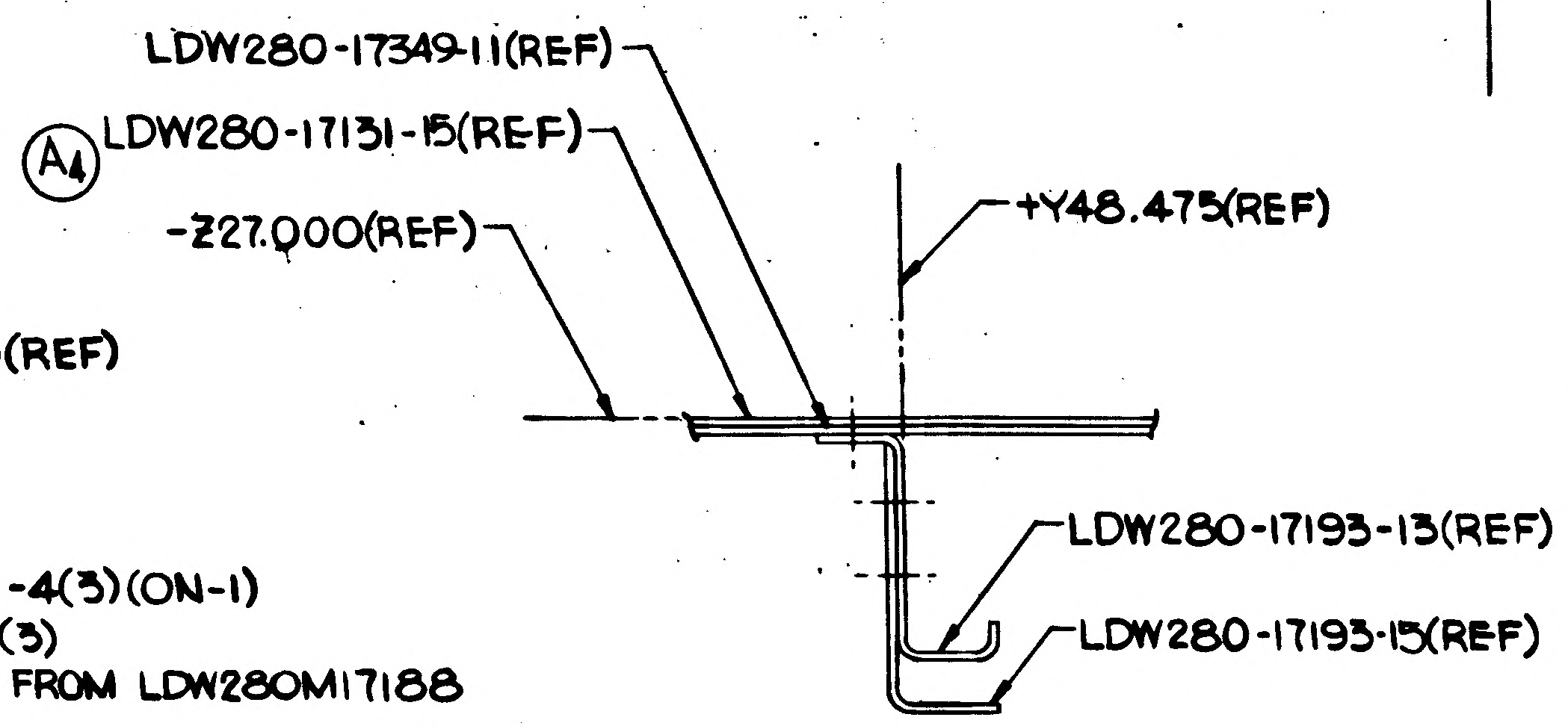
LDW280-17349-11(REF)
A4 LDW280-17131-15(REF)
-Z27.000(REF)
+Y48.475(REF)
LDW280-17193-13(REF)
LDW280-17193-15(REF)

SECTION AJ-AJ (ZONE 8J)

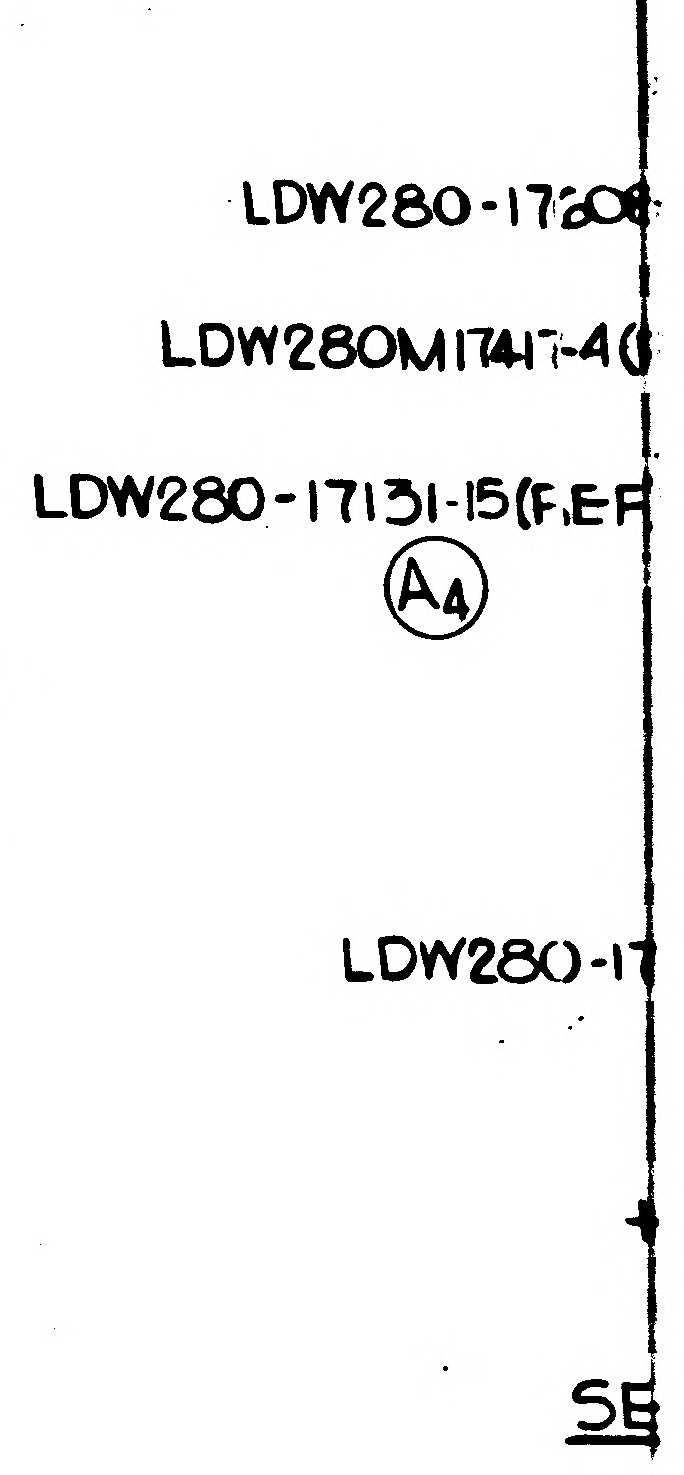
LDW280-1760
LDW280M1741-4(
LDW280-17131-15(REF
A4
LDW280-17
SE

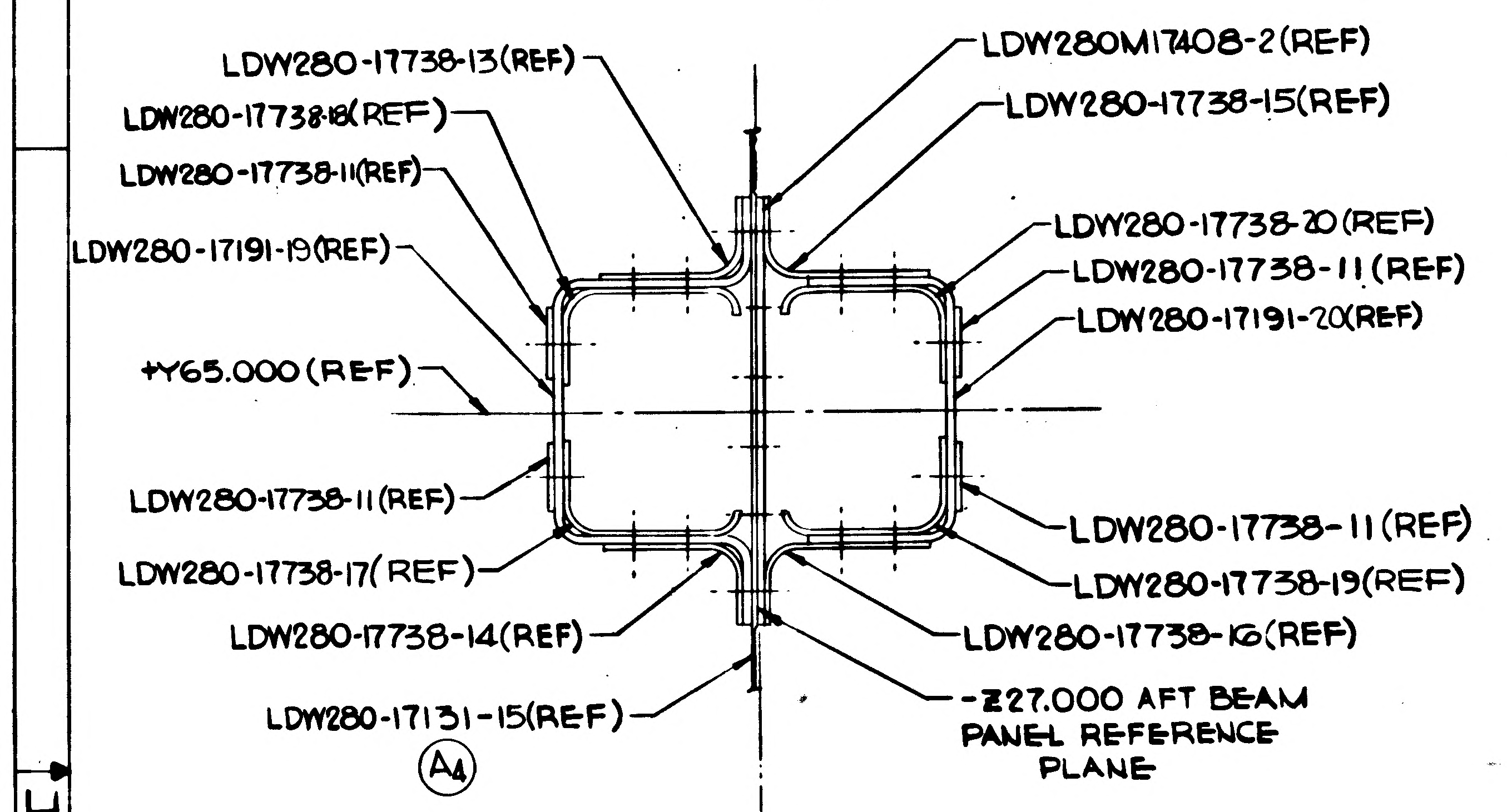
LDW280-17738-13(REF)
LDW280-17738-18(REF)
LDW280-17738-11(REF)
LDW280-17191-19(REF)
+Y65.000(REF)
LDW280-17738-11(REF)
LDW280-17738-17(REF)
LDW280-17738-14(REF)
LDW280-17131-15(REF)
A4
LDW280M17408-2(REF)
LDW280-17738-15(REF)
LDW280-17738-20 (REF)
LDW280-17738-11 (REF)
LDW280-17191-20(REF)
LDW280-17738-11 (REF)
LDW280-17738-19(REF)
LDW280-17738-16(REF)
-Z27.000 AFT BEAM
PANEL REFERENCE
PLANE

SECTION A-A (ZONE 9E SH4)

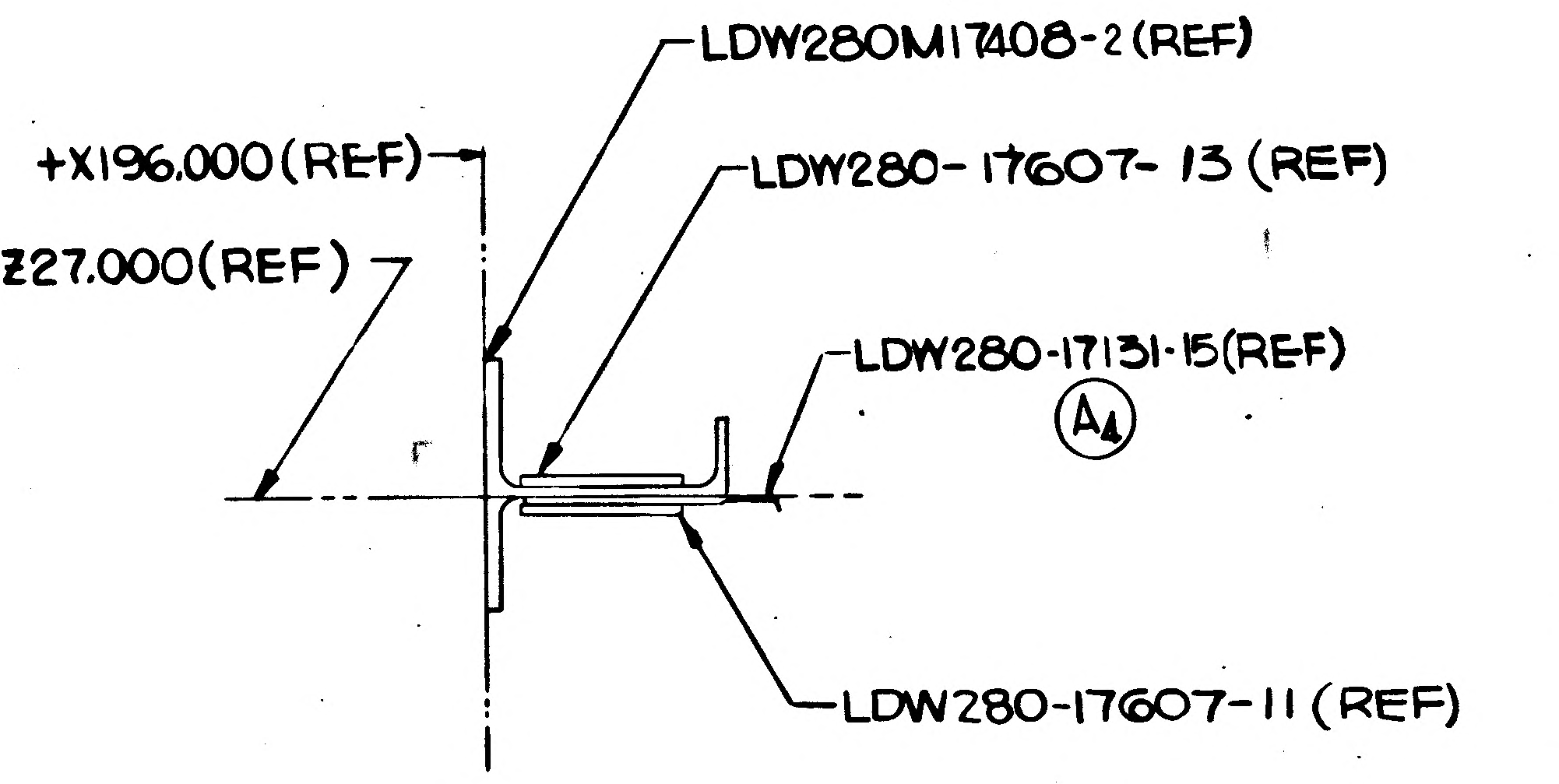
LDW280M17408-2(REF)
+X196.000(REF)
LDW280-17607-13 (REF)
-Z27.000(REF)
LDW280-17131-15(REF)
A4
LDW280-17607-11 (REF)

SECTION E-E (ZONE 9A SH3)

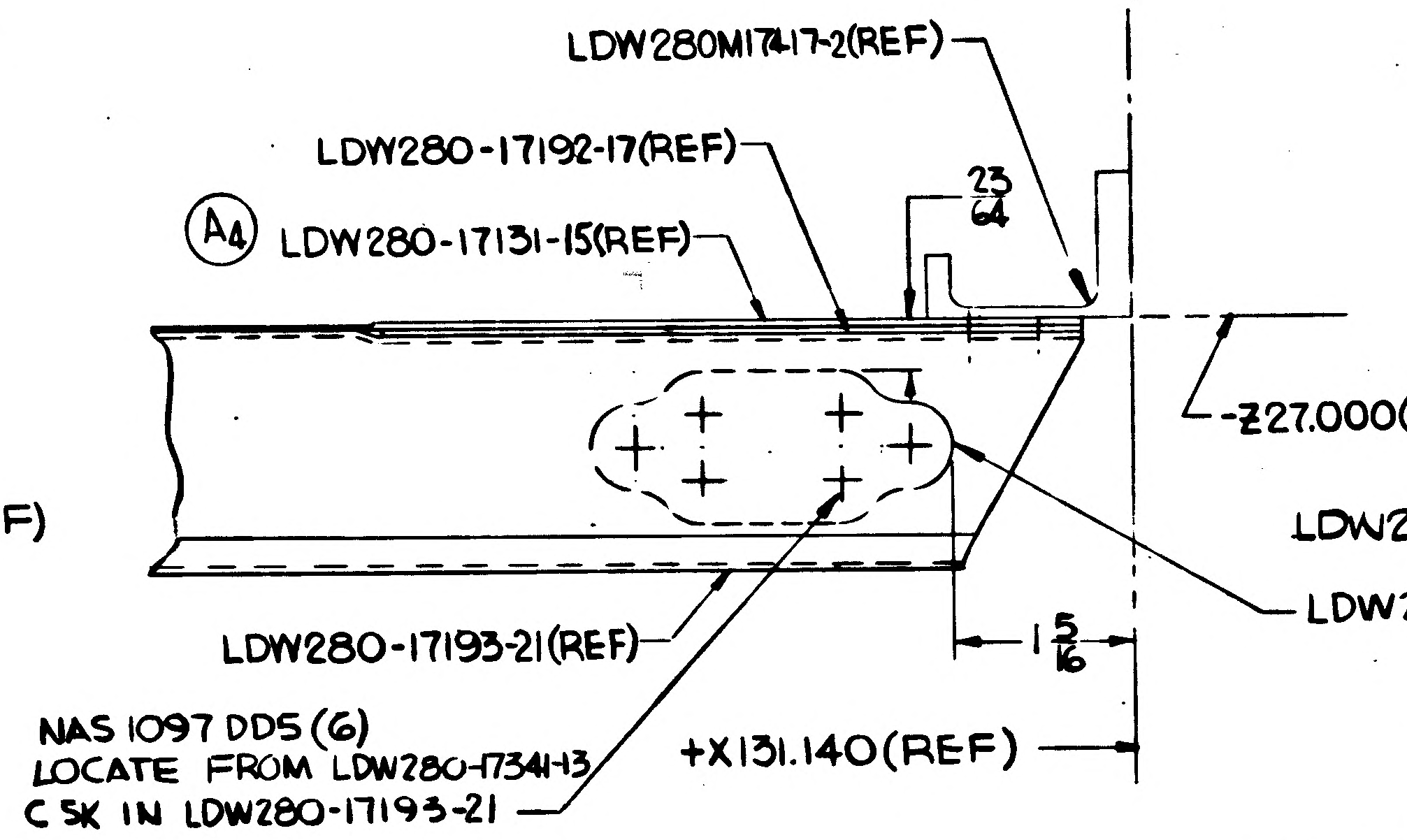
LDW280M17417-2(REF)
LDW280-17192-17(REF)
A4 LDW280-17131-15(REF)
23/64
-Z27.000(REF)
LDW280-17193-21(REF)
1 5/16
NAS 1097 DD5 (6)
LOCATE FROM LDW280-17341-3
CSK IN LDW280-17193-21
+X131.140(REF)

SECTION G-G (ZONE 3D SH4)

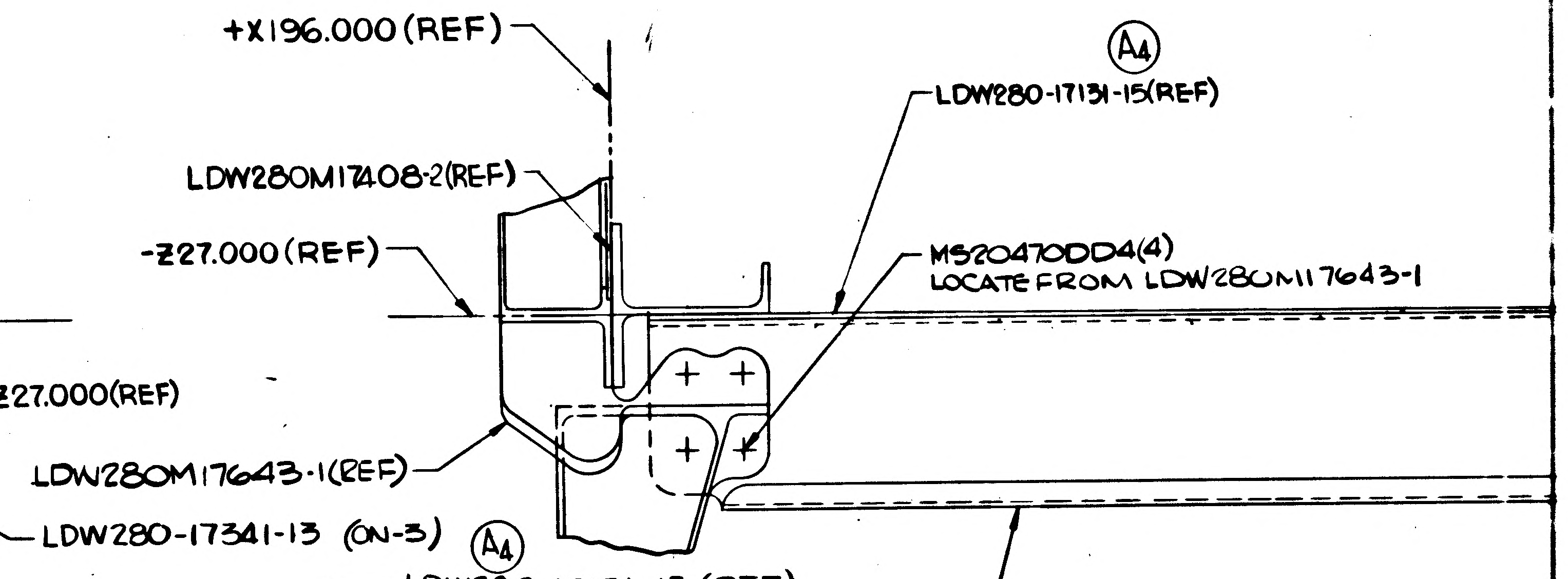
+X196.000(REF)
A4
LDW280-17131-15(REF)
LDW280M17408-2(REF)
-Z27.000(REF)
MS20470DD4(4)
LOCATE FROM LDW280M17643-1
LDW280M17643-1(REF)
LDW280-17341-13 (ON-3)
LDW280-17687-11 (REF)

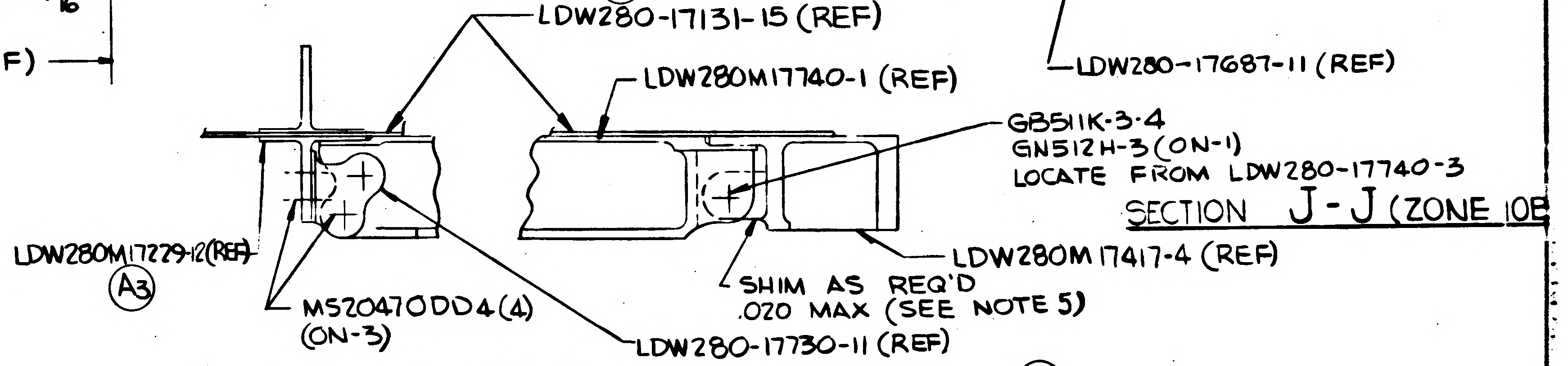
A4
LDW280-17131-15 (REF)
LDW280M17740-1 (REF)
GB511K-3-4
GN512H-3(ON-1)
LOCATE FROM LDW280-17740-3
SECTION J-J (ZONE 10E
LDW280M17417-4 (REF)
LDW280M17229-12(REF)
A3
MS20470DD4(4)
(ON-3)
SHIM AS REQ'D
.020 MAX (SEE NOTE 5)
LDW280-17730-11 (REF)

SECT AL-AL (ZONE 3B SH3)

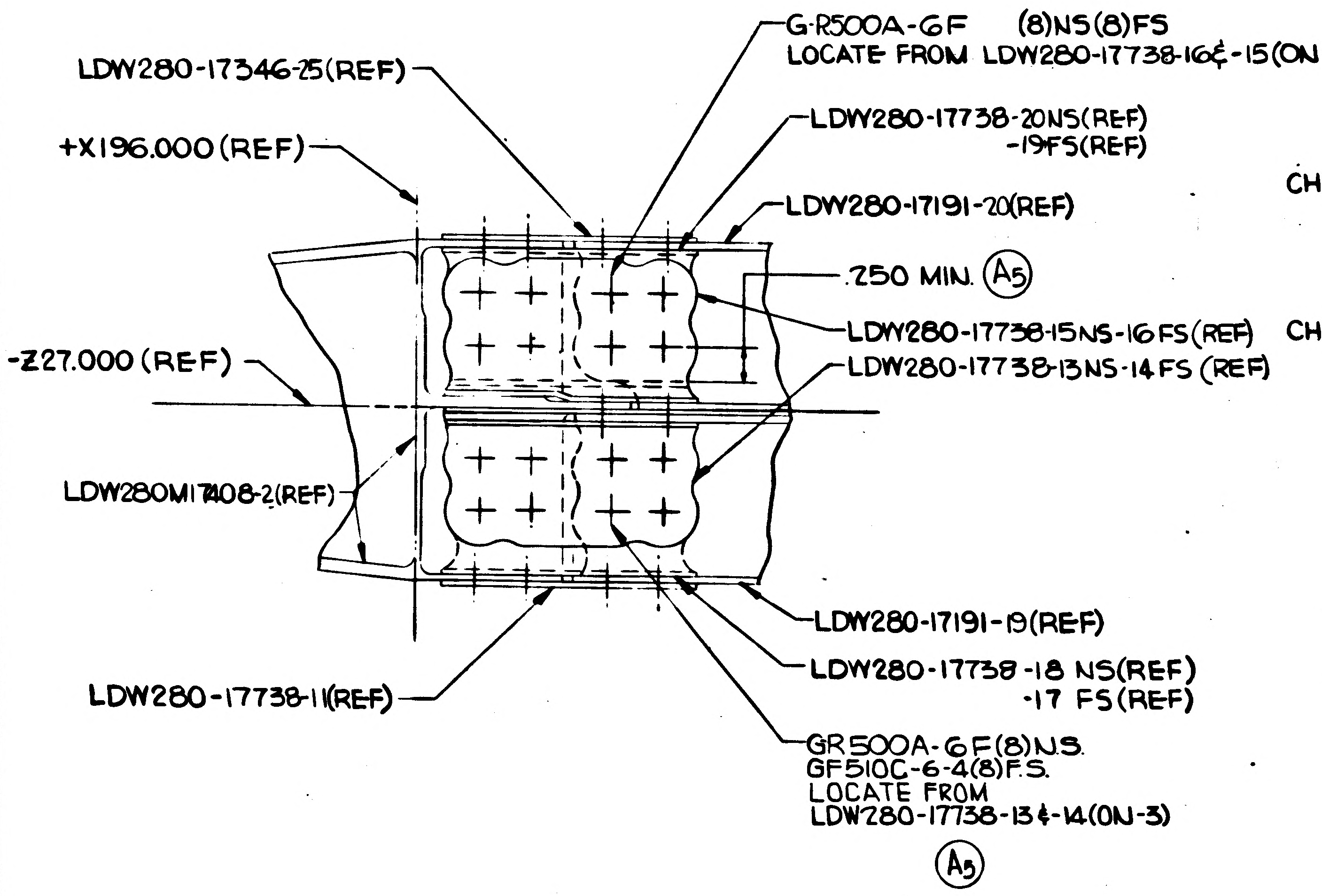
LDW280-17346-25(REF)
+X196.000(REF)
-Z27.000 (REF)
LDW280M17408-2(REF)
LDW280-17738-11(REF)
G-R500A-6F (8)NS(8)FS
LOCATE FROM LDW280-17738-16&-15(ON-3)
LDW280-17738-20NS(REF)
-19FS(REF)
LDW280-17191-20(REF)
.250 MIN. A5
LDW280-17738-15NS-16FS(REF)
LDW280-17738-13NS-14FS (REF)
LDW280-17191-19(REF)
LDW280-17738-18 NS(REF)
-17 FS(REF)
GR500A-6F(8)NS
GF510C-6-4(8)F.S.
LOCATE FROM
LDW280-17738-13&-14(ON-3)
A5

VIEW B-B (ZONE 9E SH4)

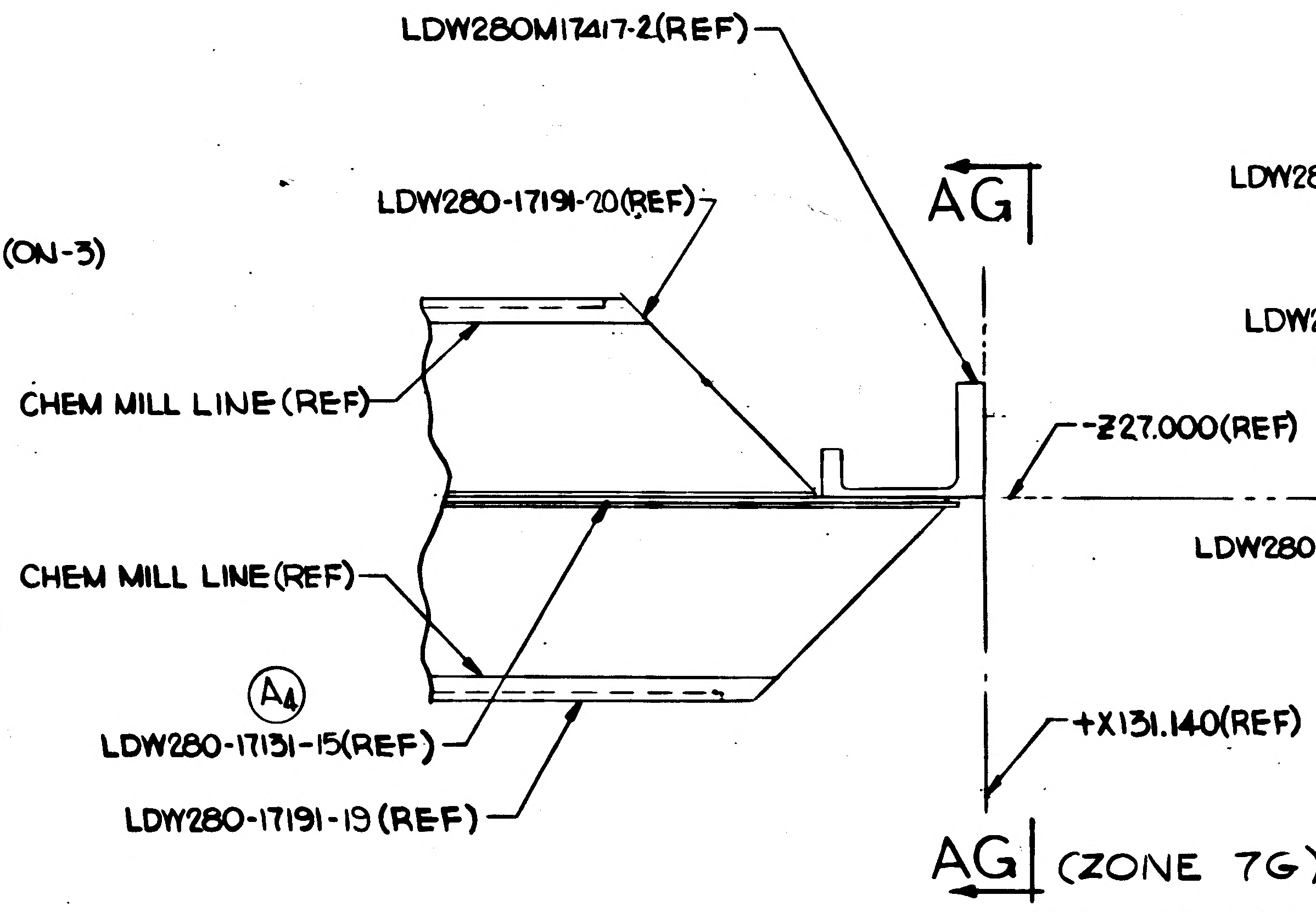
LDW280M17417-2(REF)
LDW280-17191-20(REF)
AG
CHEM MILL LINE(REF)
-Z27.000(REF)
CHEM MILL LINE(REF)
A4
LDW280-17131-15(REF)
LDW280-17191-19 (REF)
+X131.140(REF)
AG (ZONE 7G)

SECTION F-F (ZONE 3E SH4)

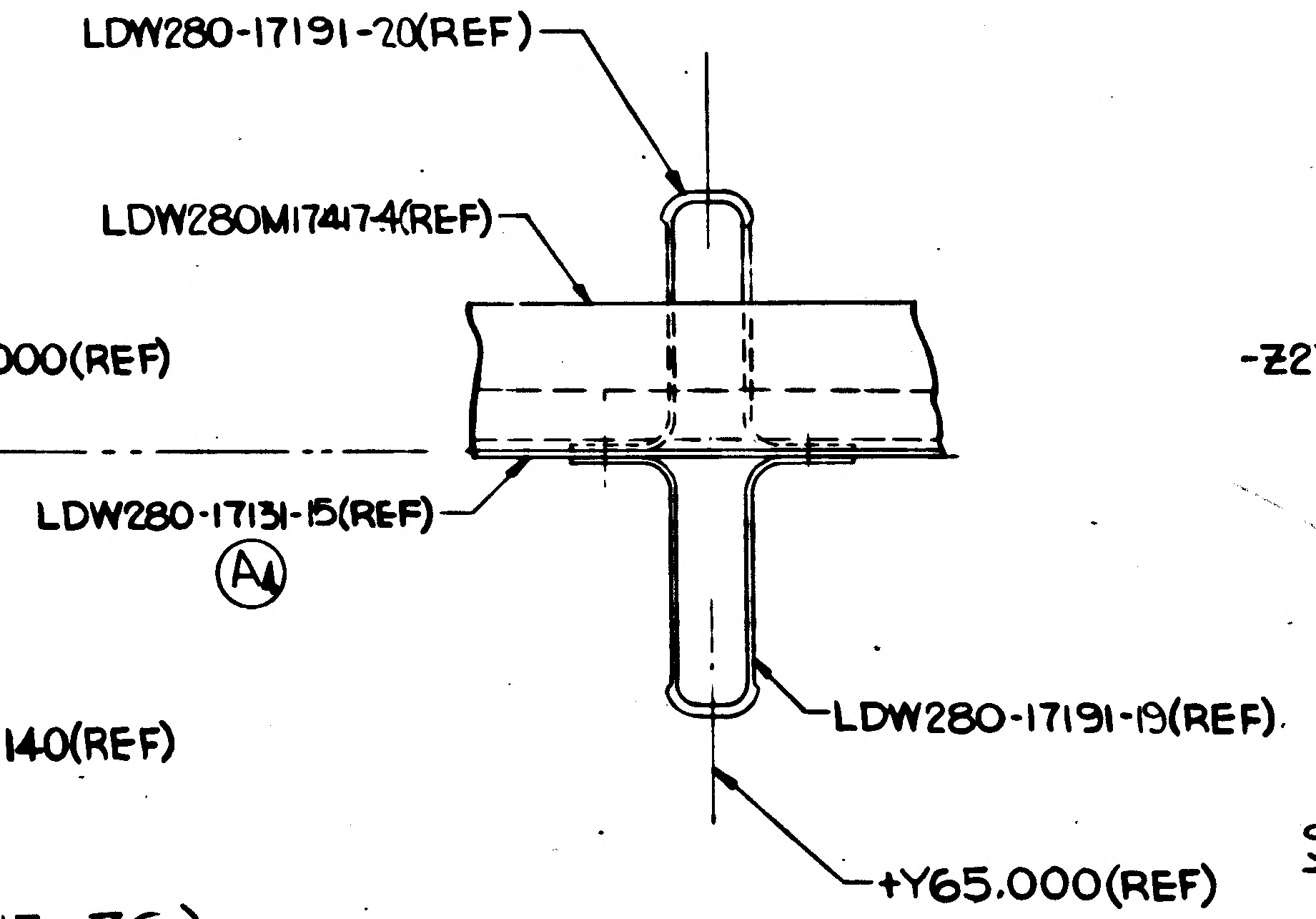
LDW280-17191-20(REF)
LDW280M17417-4(REF)
LDW280-17131-15(REF)
A4
LDW280-17191-19(REF)
+Y65.000(REF)

VIEW AG-AG (ZONE 8G)

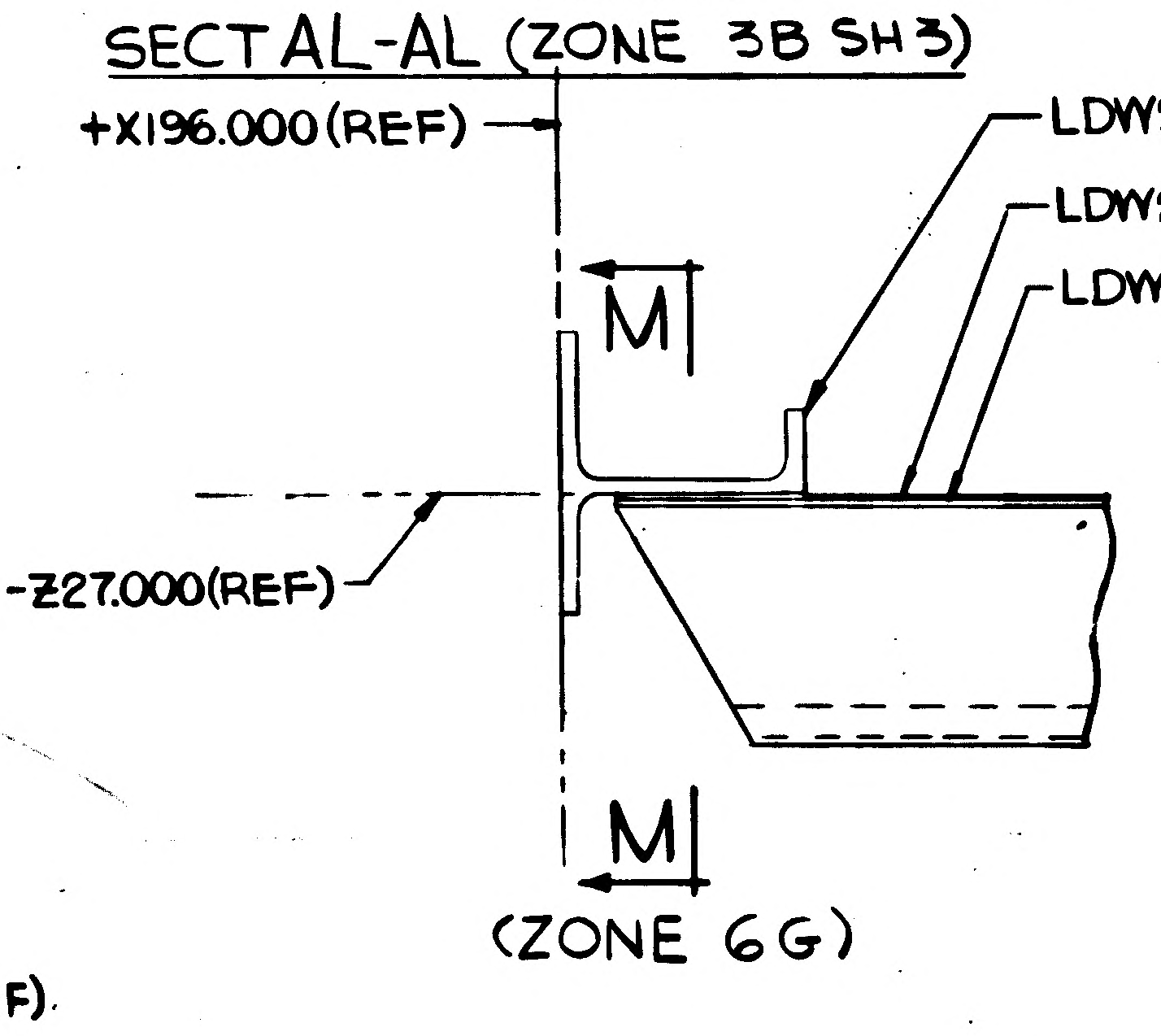
A4
+X196.000(REF)
LDW280M17408-2 (REF)
LDW280-17131-15(REF)
LDW280-17193-13(REF)
M
-Z27.000(REF)
M
(ZONE 6G)

SECTION K-K (ZONE 9C SH3)SHOWN

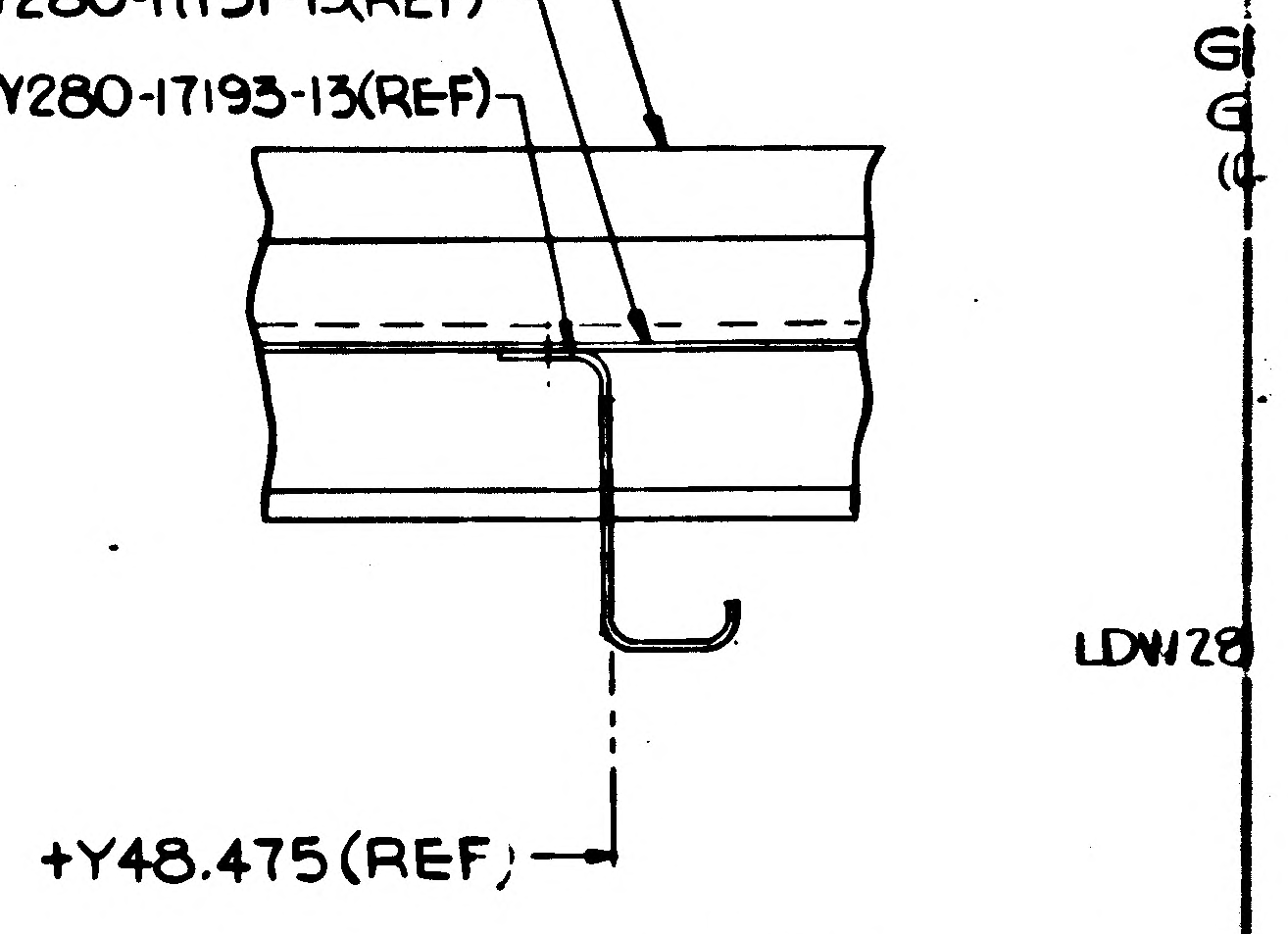
LDW28
+Y48.475(REF)

SECTION M-M (ZONE 7G

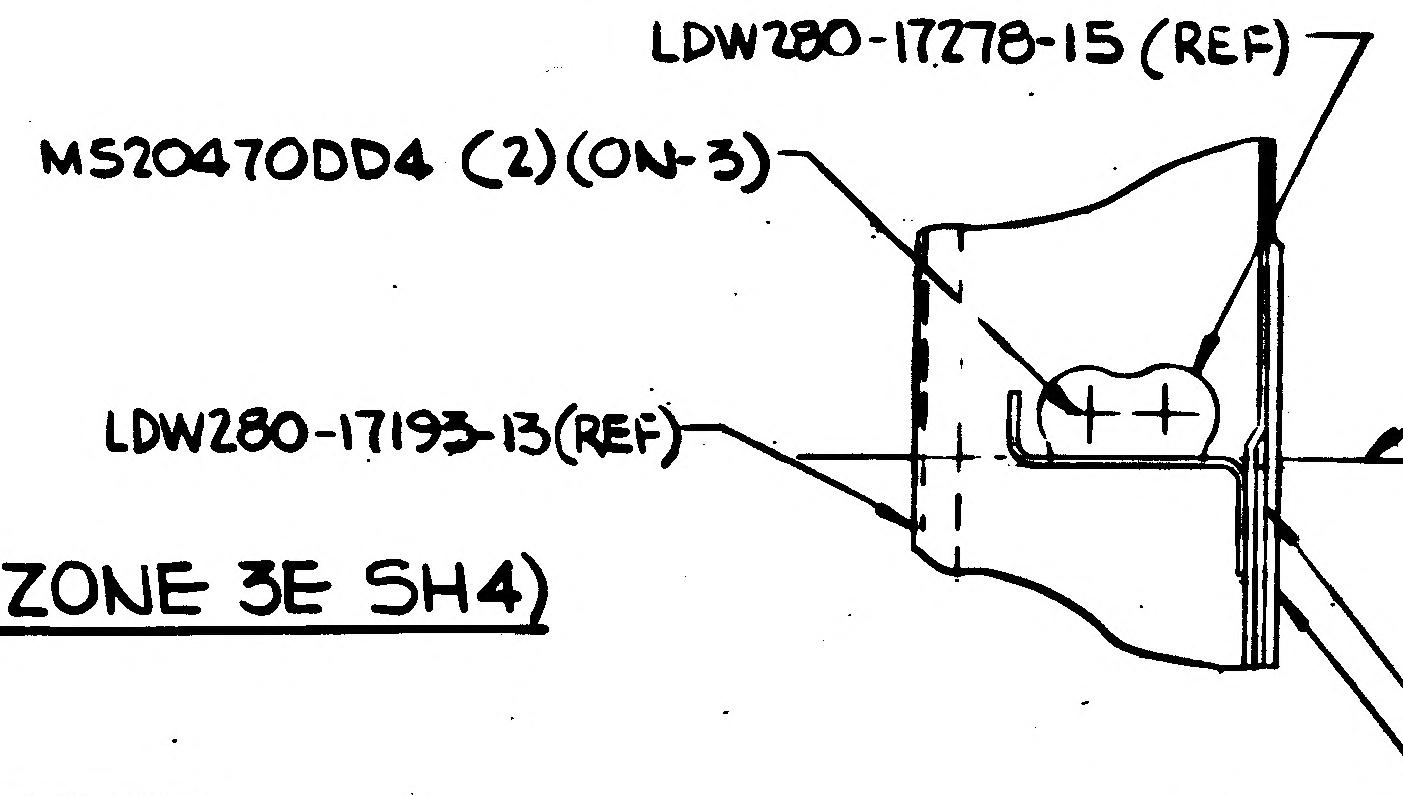
LDW280-17278-15 (REF)
MS20470DD4 (2)(ON-3)
LDW280-17193-13(REF)
LDW280-17349-11(REF)
LDW280-17131-15 (REF)
A4

SECTION AF-AF (SHOWN)
(ZONE 2G)

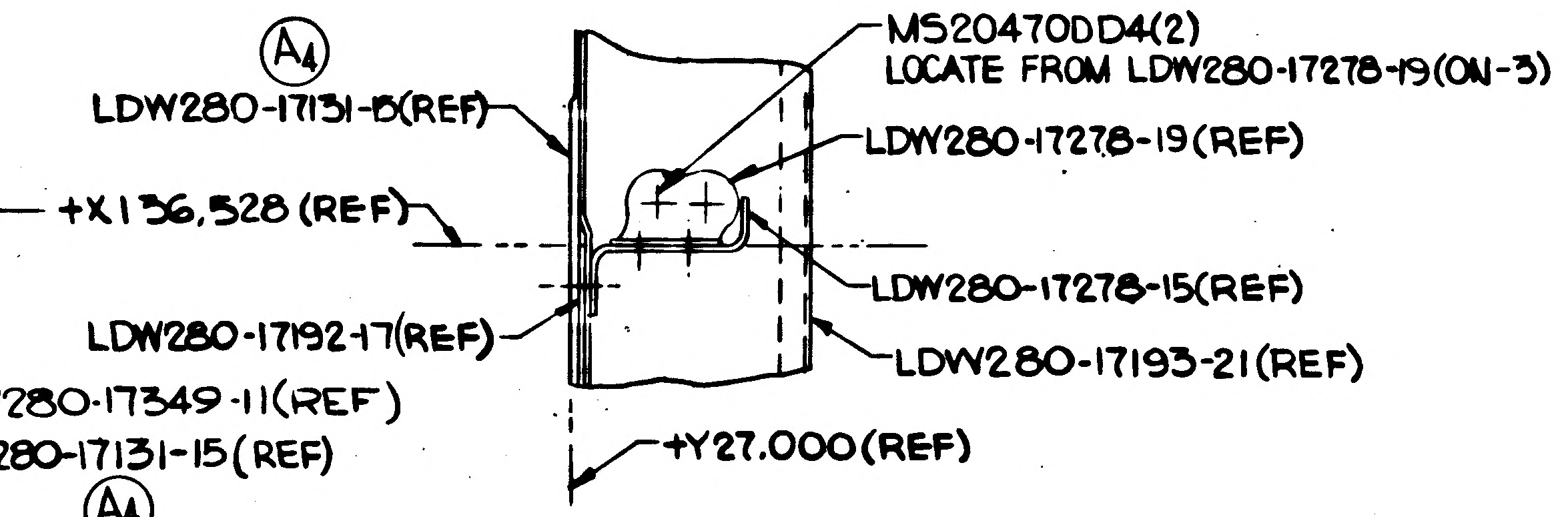
A4
LDW280-17131-15(REF)
+X136.528 (REF)
LDW280-17192-17(REF)
MS20470DD4(2)
LOCATE FROM LDW280-17278-19(ON-3)
LDW280-17278-19(REF)
LDW280-17278-15(REF)
LDW280-17193-21 (REF)
+Y27.000(REF)

SECTION AD-AD SHOWN (ZONE 2H)

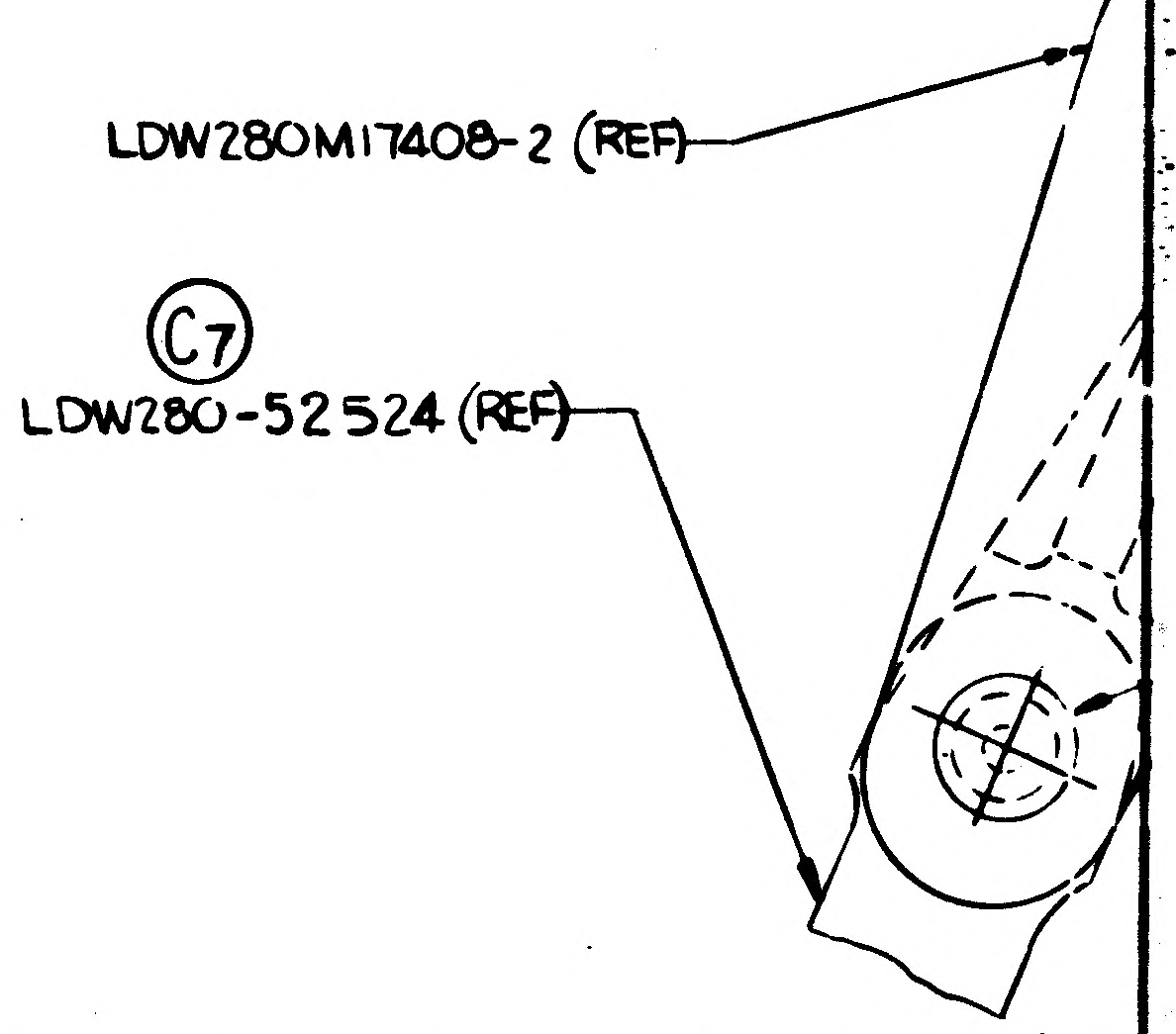
LDW280M17408-2 (REF)
C7
LDW280-52524 (REF)

VIEW AK-A

01/03

NAS 9-1100

CODE IDENT NO. 26512
LDW280-52531
SH 5

10 9 8 7 6

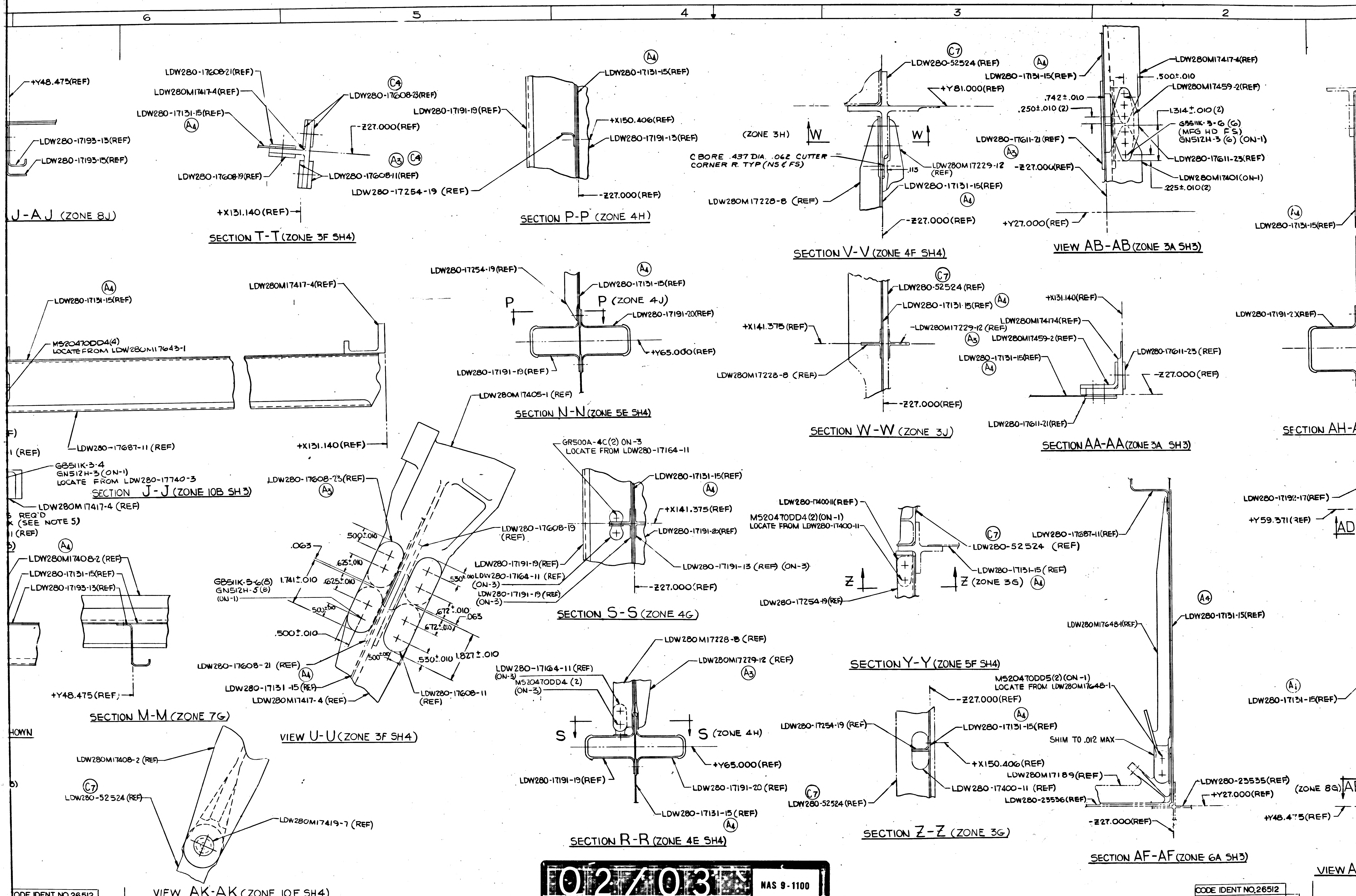
6
5
4
3
2
+Y48.475(REF)
LDW280-17193-13(REF)
LDW280-17193-15(REF)
LDW280-17608-21(REF)
LDW280M17417-4(REF)
LDW280-17131-15(REF)
LDW280-17608-23(REF)
-Z27.000(REF)
LDW280-17608-19(REF)
LDW280-17608-11(REF)
+X131.140(REF)
LDW280-17131-15(REF)
LDW280-17191-19(REF)
+X150.406(REF)
LDW280-17191-13(REF)
LDW280-17254-19 (REF)
-Z27.000(REF)
LDW280-52524 (REF)
+Y81.000(REF)
(ZONE 3H)
W
W
C BORE .437 DIA. .062 CUTTER CORNER R. TYP (NS & FS)
LDW280M17229-12 (REF)
.113
LDW280-17131-15(REF)
LDW280M17228-8 (REF)
-Z27.000(REF)
LDW280M17417-4(REF)
.500±.010
LDW280M17459-2(REF)
.742±.010
.250±.010 (2)
1.314±.010(2)
GB511K-3-6 (6)
(MFG HD FS)
GN512H-3 (6) (ON-1)
LDW280-17611-21 (REF)
-Z27.000(REF)
LDW280-17611-23(REF)
LDW280M17401(ON-1)
.225±.010(2)
+Y27.000(REF)
LDW280-17131-15(REF)
LDW280-17131-15(REF)
MS20470DD4(4)
LOCATE FROM LDW280M17643-1
LDW280M17417-4(REF)
LDW280-17687-11 (REF)
+X131.140(REF)
LDW280-17254-19(REF)
LDW280-17131-15(REF)
P
P (ZONE 4J)
LDW280-17191-20(REF)
+Y65.000(REF)
LDW280-17191-19(REF)
LDW280-52524 (REF)
LDW280-17131-15(REF)
+X141.375 (REF)
LDW280M17229-12 (REF)
LDW280M17228-8 (REF)
-Z27.000(REF)
+X131.140(REF)
LDW280M17417-4(REF)
LDW280M17459-2(REF)
LDW280-17131-15(REF)
LDW280-17611-23 (REF)
-Z27.000 (REF)
LDW280-17611-21(REF)
LDW280-17191-2X(REF)
LDW280M17405-1 (REF)
GB511K-3-4
GN512H-3(ON-1)
LOCATE FROM LDW280-17740-3
LDW280M17417-4 (REF)
REQ'D
(SEE NOTE 5)
LDW280M17408-2 (REF)
LDW280-17131-15(REF)
LDW280-17193-13(REF)
+Y48.475(REF)
LDW280-17608-23(REF)
LDW280-17608-19 (REF)
.063
.500±.010
.625±.010
1.741±.010
.625±.010
.503±.010
GB511K-5-6(8)
GN512H-5(8)
(ON-1)
.530±.010
.672±.010
.672±.010
.063
.500±.010
.500±.010
.530±.010
1.827±.010
LDW280-17608-21 (REF)
LDW280-17131-15 (REF)
LDW280M17417-4 (REF)
LDW280-17608-11 (REF)
GR500A-4C(2) ON-3
LOCATE FROM LDW280-17164-11
LDW280-17131-15(REF)
+X141.375(REF)
LDW280-17191-20(REF)
LDW280-17191-19(REF)
LDW280-17164-11 (REF) (ON-3)
LDW280-17191-19(REF) (ON-3)
LDW280-17191-13 (REF) (ON-3)
-Z27.000(REF)
LDW280-17400-11(REF)
MS20470DD4(2)(ON-1)
LOCATE FROM LDW280-17400-11
LDW280-52524 (REF)
LDW280-17687-11(REF)
LDW280-17131-15 (REF)
Z
Z (ZONE 3G)
LDW280-17254-19(REF)
LDW280-17192-17(REF)
+Y59.371(REF)
AD
LDW280M17648-1(REF)
LDW280-17131-15(REF)
LDW280M17228-8 (REF)
LDW280M17229-12 (REF)
LDW280-17164-11 (REF) (ON-3)
MS20470DD4 (2) (ON-3)
S
S (ZONE 4H)
+Y65.000(REF)
LDW280-17191-19(REF)
LDW280-17191-20 (REF)
LDW280-17131-15 (REF)
MS20470DD5(2)(ON-1)
LOCATE FROM LDW280M17648-1
-Z27.000(REF)
LDW280-17254-19 (REF)
LDW280-17131-15(REF)
SHIM TO .012 MAX
+X150.406(REF)
LDW280M17189(REF)
LDW280-17400-11 (REF)
LDW280-23536(REF)
LDW280-52524(REF)
LDW280-23535(REF)
+Y27.000(REF)
(ZONE 8G)
AF
-Z27.000(REF)
LDW280-17131-15(REF)
+Y48.475(REF)
LDW280M17408-2 (REF)
LDW280-52524 (REF)
LDW280M17419-7 (REF)
A4
A3
C4
C7

J-A J (ZONE 8J)

SECTION T-T (ZONE 3F SH4)

SECTION P-P (ZONE 4H)

SECTION V-V (ZONE 4F SH4)

VIEW AB-AB (ZONE 3A SH3)

SECTION N-N (ZONE 5E SH4)

SECTION W-W (ZONE 3J)

SECTION AA-AA (ZONE 3A SH3)

SECTION AH-A

SECTION J-J (ZONE 10B SH3)

SECTION S-S (ZONE 4G)

SECTION M-M (ZONE 7G)

VIEW U-U (ZONE 3F SH4)

SECTION Y-Y (ZONE 5F SH4)

SECTION R-R (ZONE 4E SH4)

SECTION Z-Z (ZONE 3G)

SECTION AF-AF (ZONE 6A SH3)

VIEW AK-AK (ZONE 10F SH4)

VIEW A

HOWN

02/03

NAS 9-1100

CODE IDENT NO. 26512	
LDW280-52531	SH 5

CODE IDENT NO. 26512	
LDW280-52531	SH 5

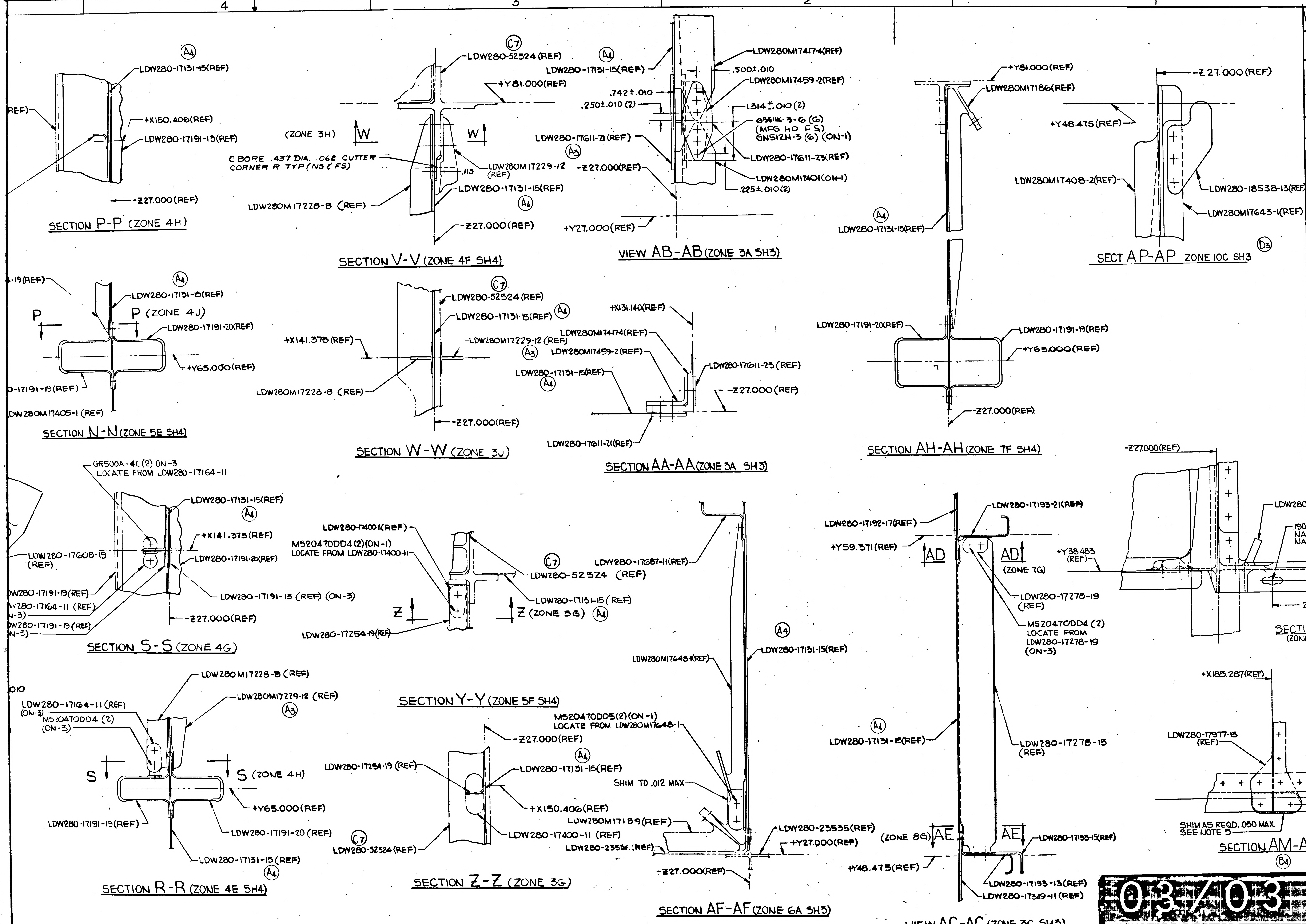
4
3
2
1
SECTION P-P (ZONE 4H)
LDW280-17131-15(REF)
LDW280-17191-13(REF)
+X150.406(REF)
-Z27.000(REF)
SECTION V-V (ZONE 4F SH4)
LDW280-52524 (REF)
+Y81.000(REF)
(ZONE 3H)
W
C BORE .437 DIA. .062 CUTTER CORNER R. TYP (NS & FS)
LDW280M17229-12 (REF)
.113
LDW280-17131-15(REF)
LDW280M17228-8 (REF)
-Z27.000(REF)
VIEW AB-AB (ZONE 3A SH3)
LDW280M17417-4(REF)
LDW280-17131-15(REF)
.500±.010
LDW280M17459-2(REF)
.742±.010
.250±.010 (2)
1.314±.010 (2)
G5511K-3-6 (6) (MFG HD FS)
GN512H-3 (6) (ON-1)
LDW280-17611-21 (REF)
LDW280-17611-23(REF)
-Z27.000(REF)
LDW280M17401(ON-1)
.225±.010(2)
+Y27.000(REF)
+Y81.000(REF)
LDW280M17186(REF)
LDW280-17131-15(REF)
-Z27.000 (REF)
+Y48.475(REF)
LDW280M17408-2(REF)
LDW280-18538-13(REF)
LDW280M17643-1(REF)
SECT AP-AP ZONE 10C SH3
SECTION N-N (ZONE 5E SH4)
-19(REF)
LDW280-17131-15(REF)
P (ZONE 4J)
LDW280-17191-20(REF)
+Y65.000(REF)
-17191-19(REF)
LDW280M17405-1 (REF)
SECTION W-W (ZONE 3J)
LDW280-52524 (REF)
LDW280-17131-15 (REF)
+X141.375 (REF)
-LDW280M17229-12 (REF)
LDW280M17228-8 (REF)
-Z27.000(REF)
SECTION AA-AA (ZONE 3A SH3)
+X131.140(REF)
LDW280M17417-4(REF)
LDW280M17459-2 (REF)
LDW280-17131-15(REF)
LDW280-17611-23 (REF)
-Z27.000 (REF)
LDW280-17611-21(REF)
SECTION AH-AH (ZONE 7F SH4)
LDW280-17191-20(REF)
LDW280-17191-19(REF)
+Y65.000(REF)
-Z27.000(REF)
SECTION S-S (ZONE 4G)
GR500A-4C(2) ON-3
LOCATE FROM LDW280-17164-11
LDW280-17131-15(REF)
+X141.375(REF)
LDW280-17608-19 (REF)
LDW280-17191-20(REF)
LDW280-17191-19(REF)
LDW280-17164-11 (REF) (ON-3)
LDW280-17191-19 (REF) (ON-3)
LDW280-17191-13 (REF) (ON-3)
-Z27.000(REF)
SECTION Y-Y (ZONE 5F SH4)
LDW280-17400-11(REF)
MS20470DD4 (2)(ON-1)
LOCATE FROM LDW280-17400-11
LDW280-52524 (REF)
LDW280-17131-15 (REF)
Z (ZONE 3G)
LDW280-17254-19(REF)
SECTION AF-AF (ZONE 6A SH3)
LDW280-17687-11(REF)
LDW280M17648-1(REF)
LDW280-17131-15(REF)
MS20470DD5(2)(ON-1)
LOCATE FROM LDW280M17648-1
SHIM TO .012 MAX
LDW280M17189(REF)
LDW280-23535(REF)
LDW280-23535 (REF)
+Y27.000(REF)
-Z27.000(REF)
VIEW AC-AC (ZONE 3C SH3)
LDW280-17192-17(REF)
LDW280-17193-21(REF)
+Y59.371(REF)
AD
+Y38.483 (REF)
(ZONE 7G)
LDW280-17278-19 (REF)
MS20470DD4 (2)
LOCATE FROM LDW280-17278-19 (ON-3)
LDW280-17131-15(REF)
LDW280-17278-15 (REF)
(ZONE 8G)
AE
LDW280-17193-15(REF)
+Y48.475(REF)
LDW280-17193-13(REF)
LDW280-17349-11 (REF)
SECTION AN-AN (ZONE 10B SH3)
-Z27.000(REF)
LDW280M17643-1(REF)
.190-.196 (#11 DRILL)(2) HOLES
NAS697A3(2) F.S.
NAS1097AD3(4)
2 7/8
SECTION AM-AM (ZONE 8F SH4)
+X185.287(REF)
LDW280-17977-13 (REF)
SHIM AS REQD, .050 MAX.
SEE NOTE 5
.180 MIN.
SECTION R-R (ZONE 4E SH4)
LDW280M17228-8 (REF)
LDW280M17229-12 (REF)
LDW280-17164-11 (REF) (ON-3)
MS20470DD4 (2) (ON-3)
S (ZONE 4H)
+Y65.000(REF)
LDW280-17191-19(REF)
LDW280-17191-20 (REF)
LDW280-17131-15 (REF)
SECTION Z-Z (ZONE 3G)
-Z27.000(REF)
LDW280-17254-19 (REF)
LDW280-17131-15(REF)
+X150.406(REF)
LDW280-17400-11 (REF)
LDW280-52524 (REF)
A4
A3
C7
D3
B7
B3
B4
J
H
G

MANUFACTURING OPERATIONS
UNLESS OTHERWISE SPECIFIED
NOTES CHECKED ✓ APPLY TO THIS DWG.

~~PART NUMBER AND ALL OTHER MARKINGS IN REGION MARKED ☒ USE BOTH SIDES IF NECESSARY.~~

~~FILLET AND INSIDE CORNER RADII TOLERANCES~~
~~.016R TO .062R ± .010~~
~~.063R TO .250R ± .015~~
~~OVER .250R ± .030~~

~~DEPTH SHOWN FOR TAPPED HOLES IS FULL THDS. 2-3 IMP. THDS. BEYOND PERMISSIBLE~~

~~EXTERNAL THREAD LENGTH SHOWN INCLUDES 2 IMPERFECT THREADS MAX.~~

~~DO NOT CADMIUM PLATE & PAINT HOLES OR SURFACES MARKED WITH DOUBLE ASTERISK.~~

~~MISMATCH STEP OF ± .005 PERMISSIBLE DUE TO CHANGE OF CUTTERS AT INSIDE INTERSECTING SURFACES.~~

~~DIAMETERS MARKED MUST BE CONCENTRIC WITHIN FULL INDICATOR READING.~~

~~HOLES MUST BE KEPT FREE OF CHROME PLATING SOLUTION.~~

~~ALL DIMENSIONS SHOWN TO BE MET AFTER CADMIUM PLATING. THICKNESS OF PLATE .0003 MIN TO .0005 MAX. MIN THICKNESS TO BE .0002 ON THREADED AREAS. NO ALLOWANCES FOR PLATING IN HOLES~~

~~125 SURFACE ROUGHNESS INCLUDING REAMED HOLES PER MIL-STD-10~~

~~200 FOR ALL DRILLED HOLES~~

~~REMOVE ALL BURRS. BREAK ALL EDGES .015-.031~~

~~INSPECTION INFORMATION MINIMUM PERMISSIBLE AVERAGE EDGE DISTANCE MARKED IS~~

~~SYMBOL √ DENOTES SURFACE TO BE MACHINED~~

~~UNLESS OTHERWISE SPECIFIED TOLERANCE ON FLANGES IS ± 1/32~~

~~LENGTHS OF AN, NAS & MS AL ALY RIVETS SHORTER THAN 1 INCH ARE NOT SPECIFIED~~

~~TOLERANCE ON LOFTED DELINEATIONS IS~~

DWG SIZE 34x
PRINTING INFO ONLY
FULL SIZE SHEET AREA (34x 108) = 27.0 SQ. FT.
1/2 SIZE SHEET AREA (1/4 OF FULL) = 6.7 SQ. FT.
PRINT TRIM LINE

LDW280-52531 D

03/03 NAS 9-1100

CODE IDENT NO. 26512	
LDW280-52531	SH 5

GRUMMAN AIRCRAFT ENGRG CORP. BETHPAGE, L. I., NEW YORK

MODEL OR END ITEM	SIZE	CODE IDENT NO.		
LM	J	26512	LDW280-52531	D
	SCALE FULL		SHEET 5.00	

6

2 FRAMES

THIS IS AN ORIGINAL DWG

ENG 73-7 6-64

LDW280-52537 A

MODEL OR END ITEM	NEXT ASSY	MODULE OR SER NO.	REQD PER MODULE OR END ITEM
LEM	LDW280-53510	LEM-3(33)	1
LEM	LDW280-52510	LEM-2(32)	1

PART NO. LDW280-52537- 1	GAEC SCH NO. 51-3	

2

SH REV STATUS: FOR DESCRIPTION OF REV SEE SUBQ SH

SHEET	1.00	1.10	200	2.01	2.02	2.03	3.00	4.00	5.00
REV	A	A	A			A	A	A	A
SHEET									
REV									
SHEET									
REV									

LAST SECT LTR USED	T-T	GRUMMAN REL INFO			
LAST DASH NO. USED	- 3	PRIM NO.	LE(001)		
		207	MP-A	9-6-6	

UNLESS OTHERWISE SPECIFIED DIMENSIONS ARE IN INCHES.
TOLERANCE UNLESS SPECIFIED
FRACTIONS - DECIMALS – ANGLES
±1/16 ±.020 ±1/2 ②

ORIG DWG AUTH

DETAIL SPEC REQUIREMENT

CLASS II ENGRG CHANGE

CLASS I ENGRG CHANGE

CONTRACT NO. NAS 9-1100 | LINE ITEM 1 | DOCUMENTATION TYPE II

DRAWN BY	J.Gardella 5-23-66	RELIABILITY	
LAYOUT BY	F.Madden 5-31-6		
CHECKED BY	5·31·66		
GR LEADER	5/31/66		
VEH DES. INT	6/1		
STRUCTURES	6/1	PROJ ENGR	Plunkett 13 June 66
STRUCTURES		REL GROUP	C. Caramanis 6-16
WEIGHTS	6/10		

GRUMMAN AIRCRAFT ENGRG CORP
BETHPAGE, L. I., NEW YORK

PANEL INSTALLATION
DESCENT STAGE-FWD LH BEAM

SIZE	CODE IDENT NO.		
B	26512	LDW280-52537	A
SCALE	NONE	SHEET 1.00 OF 9	

ENG 77.1 12-65

01

NAS 9-1100

REVISIONS FOR CONTINUATION OF REVISIONS SEE SHEET ______

CHANGE LTR	ITEM NO.	SHEET NO.	ZONE	GRUMMAN INFO ONLY	DET SPEC	CLASS I	CLASS II	ENGRG ORDER	DESCRIPTION	EFFECTIVITY	DISPOSITION OF EXISTING PARTS		CHANGED BY AND DATE	ENGRG APPD	GOVT APPD
											REWORK	SCRAP			
A	1	1.00 1.10 2.00 3.00 4.00	B-6 E-6					EO A1	IN B/M & FLD ON -3 ASSY REPLACE LDW 280-17137-19 WITH LDW280-17137-25 SH 1OF9 WAS 1OF8 ADDED SH 1.10	LEM-2,-3	✓		P. Como 8-2-66		
	2	1.10, 2.00, 3.00	A6				✓	EO A2	IN FLD & B/M & MOD BLK ADDED LDW 280M17673-1 & MS20470-AD4(2) TO -1 PANEL INSTL.						
	3	1.10, 2.00, 4.00					✓	EO A3	IN FLD & BM CHANGED DASH NO. OF LDW 280-17137-19 TO -25		NOT	REQD			
	4	3.00, 4.00 5.00							CHANGED COML CALLOUTS TO GAEC VENDOR APPROVED EQUIV. & REVISED NOTE 6	NOT REQD	NOT	REQD			
	5	1.10						Ⓡ	REF EOA3, PREVIOUSLY INCORPORATED ON EOA1	NOT REQD	NOT	REQD	YANOFF 8-13-66		Ⓡ

CHG APPROVED

LTR	GROUP LDR	VEH DES INT	STRUCTURES	STRUCTURES	WEIGHTS	RELIABILITY
A	9/1/66					

GRUMMAN AIRCRAFT ENGRG CORP., BETHPAGE, L. I., NEW YORK

SIZE	CODE IDENT NO.		
B	26512	LDW 280-52537	A
SCALE NONE			SHEET 1.10

ENG 77.16 3-66

01

NAS 9-1100

QTY PER ASSEMBLY																	
					-3	-1	CODE IDENT	PART NO.	I&T	NOMENCLATURE OR DESCRIPTION	MATERIAL	GOVT SPEC	COML SPEC	STOCK SIZE	PROCESS SYM	FINISH NO.	ZONE
					1			LDW280-17159 -16	E	CLIP	SEE DWG						9C
					1			-15									9E
					1			14									9B
					1			-13									9C
					2			12									9C
					2			LDW280-17159-11		CLIP							9C
					1			LDW280-17158 -28		ANGLE							4A
					1			-26									3A
					1			-24									9E
					1			LDW280-17158-22									9A
					1			LDW280-17157-26									4A
					1			LDW280-17157-24									5A
					1			LDW280-17157-22									5A
					1			LDW280-17156 -28									7A
					1			-26									7A
					1			-24									6A
					1			-22									6A
					1			LDW280-17156-20									6A
					2			LDW280-17155 -26									8A
					1			-24									8A
					1			-22									7A
					1			LDW280-17155-20		ANGLE							7A
					1												
					1			LDW280-17137-25		WEB	SEE DWG						6C
						1		LDW280M17673-1		BRACKET	SEE DWG						7A
								LDW280-52537-3		PANEL ASSY.					NONE	NONE	
						1		LDW280-52537-1	E	PANEL INSTL.					NONE	NONE	

SYM OR NO.	PROCESS OR FINISH	GRUMMAN SPEC OR MILITARY SPEC	SYM OR NO.	PROCESS OR FINISH	GRUMMAN SPEC OR MILITARY SPEC	SYM OR NO.	PROCESS OR FINISH	GRUMMAN SPEC OR MILITARY SPEC

I & T: IDENTIFICATION AND TRACEABILITY IN ACCORDANCE WITH : NONE

GRUMMAN AIRCRAFT ENGRG CORP, BETHPAGE, L. I., NEW YORK

SIZE	CODE IDENT NO.		
B	26512	LDW280-52537	A
SCALE NONE			SHEET 2.00

ENG 77.2 7-65

01

NAS 9-1100

QTY PER ASSEMBLY							CODE IDENT	PART NO.	I&T	NOMENCLATURE OR DESCRIPTION	MATERIAL	GOVT SPEC	COML SPEC	STOCK SIZE	PROCESS SYM	FINISH NO.	ZONE
					-3	-1											
						4		GB511K-5-9	E	BOLT	GRUMMAN STD						
						4		GB511K-5-7									
						6		GB511K-4-8									
						6		GB511K-4-7									
						10		GB511K-4-6									
						18		GB511K-3-8									
						6		GB511K-3-6									
					8			GB511K-08-6									
					26	6		GB511K-08-4									
					12	10		GB511K-08-3									
					3			GB511K-08-2		BOLT							
					49	16		GN512H-08		NUT, COLLAR	GRUMMAN STD						
								NAS1097DD5		RIVET	STD PART						
								MS20470DD6									
								MS20470DD5									
								MS20470DD4									
								MS20470AD4	E	RIVET	STD PART						

SYM OR NO.	PROCESS OR FINISH	GRUMMAN SPEC OR MILITARY SPEC	SYM OR NO.	PROCESS OR FINISH	GRUMMAN SPEC OR MILITARY SPEC	SYM OR NO.	PROCESS OR FINISH	GRUMMAN SPEC OR MILITARY SPEC

I & T: IDENTIFICATION AND TRACEABILITY IN ACCORDANCE WITH :
NONE

GRUMMAN AIRCRAFT ENGRG CORP, BETHPAGE, L. I., NEW YORK

SIZE	CODE IDENT NO.		
B	26512	LDW280-52537	A
SCALE NONE		SHEET 203	

ENG 77.2 7-65

01

NAS 9-1100

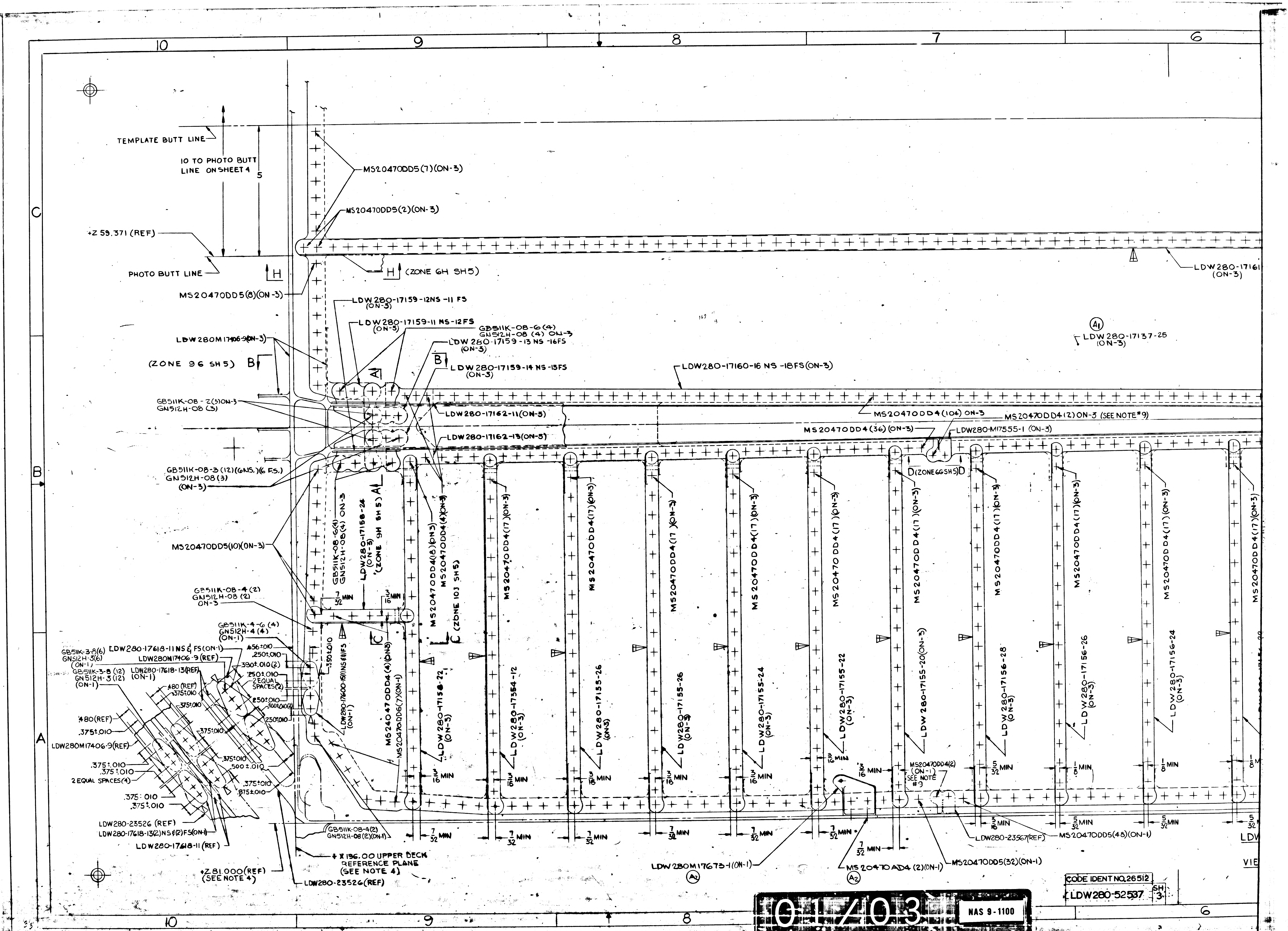
10
9
8
7
6
C
B
A
TEMPLATE BUTT LINE
10 TO PHOTO BUTT LINE ON SHEET 4
5
+Z 59.371 (REF)
PHOTO BUTT LINE
H
H (ZONE 6H SH5)
MS20470DD5(7)(ON-3)
MS20470DD5(2)(ON-3)
MS20470DD5(8)(ON-3)
LDW280-17161 (ON-3)
LDW280-17159-12NS-11FS (ON-3)
LDW280-17159-11NS-12FS (ON-3)
GB511K-08-6(4)
GN512H-08 (4) ON-3
LDW280-17159-13NS-16FS (ON-3)
LDW280-17159-14NS-15FS (ON-3)
LDW280M17406-9(ON-3)
(ZONE 9G SH5) B
A1
LDW280-17137-25 (ON-3)
LDW280-17160-16NS-18FS(ON-3)
GB511K-08-2(5)ON-3
GN512H-08 (5)
LDW280-17162-11(ON-3)
LDW280-17162-13(ON-3)
MS20470DD4(104) ON-3
MS20470DD4(2) ON-3 (SEE NOTE*9)
MS20470DD4(36)(ON-3)
LDW280-M17555-1 (ON-3)
D(ZONE 6G SH5)D
GB511K-08-3(12)(6NS,)(6FS.)
GN512H-08(3)
(ON-3)
MS20470DD5(10)(ON-3)
GB511K-08-6(4)
GN512H-08(4) ON-3
LDW280-17158-24 (ON-3)
(ZONE 9H SH 5)
MS20470DD4(18)(ON-3)
MS20470DD4(4)(ON-3)
(ZONE 10J SH5)
MS20470DD4(17)(ON-3)
GB511K-08-4(2)
GN512H-08(2)
ON-3
7/32 MIN
3/16 MIN
C
GB511K-4-6(4)
GN512H-4(4)
(ON-1)
GB511K-3-8(6)
GN512H-3(6)
(ON-1)
LDW280-17618-11NS & FS(ON-1)
LDW280M17406-9(REF)
GB511K-3-8(12)
GN512H-3(12)
(ON-1)
LDW280-17618-13(REF)
(ON-1)
.56±.010
.250±.010
.390±.010(2)
.250±.010
2 EQUAL SPACES(2)
.250±.010
.300±.010(2)
.250±.010
.350±.010
LDW280-17600-15(11NS)(11FS)
(ON-1)
MS20470DD4(4)(ON-3)
MS20470DD6(7)(ON-1)
.480 (REF)
.375±.010
.480(REF)
.375±.010
LDW280M17406-9(REF)
.375±.010
.375±.010
2 EQUAL SPACES(4)
.375±.010
.375±.010
.500±.010
.375±.010
.875±.010
LDW280-17158-22 (ON-3)
LDW280-17354-12 (ON-3)
LDW280-17155-26 (ON-3)
LDW280-17155-26 (ON-3)
LDW280-17155-24 (ON-3)
LDW280-17155-22 (ON-3)
LDW280-17155-20(ON-3)
LDW280-17156-28 (ON-3)
LDW280-17156-26 (ON-3)
LDW280-17156-24 (ON-3)
3/16 MIN
5/32 MIN
1/8 MIN
MS20470DD4(2)
(ON-1)
SEE NOTE #9
LDW280-23526 (REF)
LDW280-17618-13(2)NS&(2)FS(ON-1)
LDW280-17618-11 (REF)
GB511K-08-4(2)
GN512H-08(2)(ON-1)
+X 136.00 UPPER DECK REFERENCE PLANE (SEE NOTE 4)
+Z 81.000(REF)
(SEE NOTE 4)
LDW280-23526(REF)
LDW280M17673-1(ON-1)
A2
MS20470AD4 (2)(ON-1)
A2
MS20470DD5(32)(ON-1)
LDW280-23567(REF)
MS20470DD5(48)(ON-1)
LDW
VIE

CODE IDENT NO. 26512
LDW280-52537 SH 3

01/03

NAS 9-1100

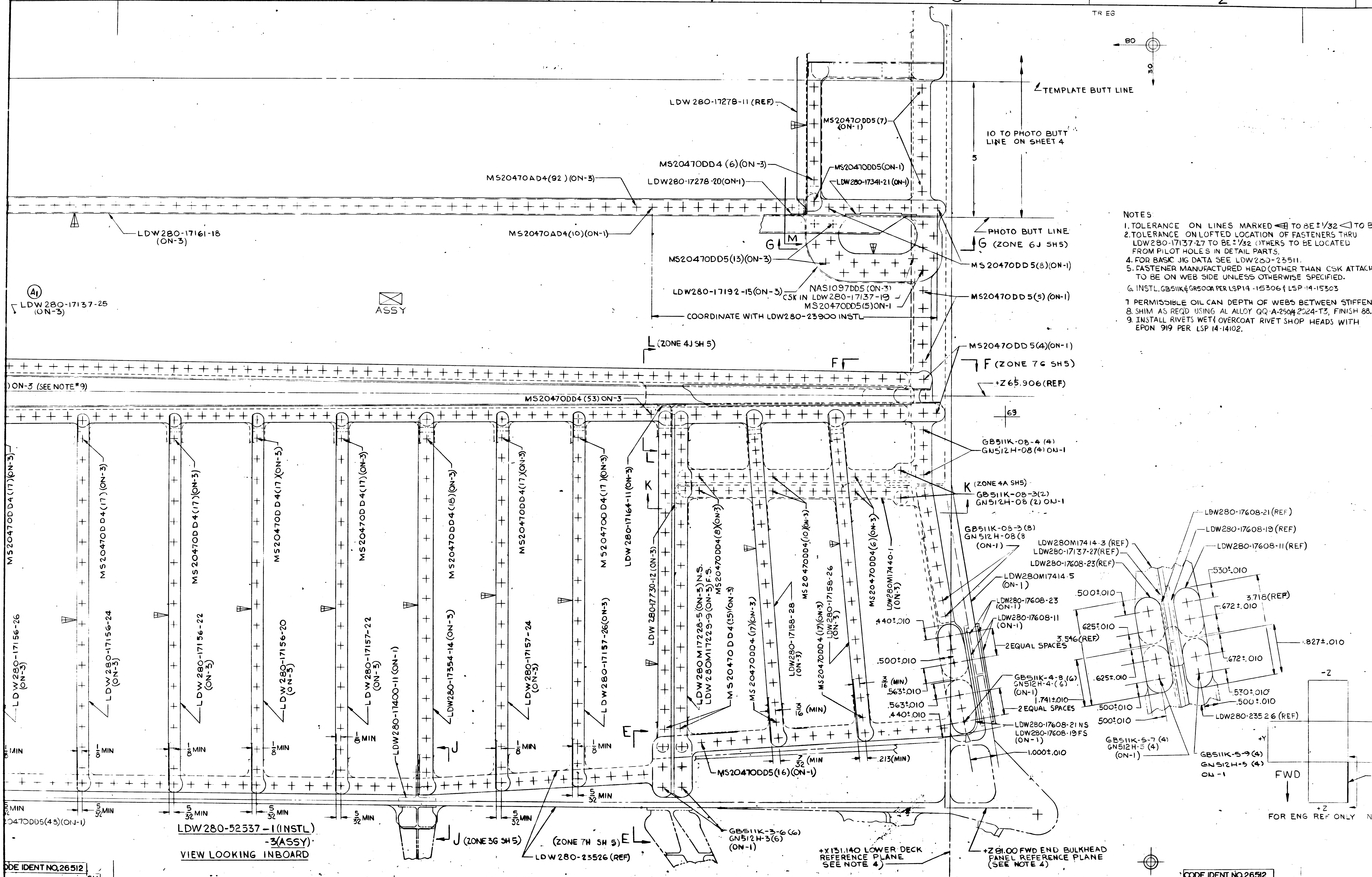
6
5
4
3
2
TR EG
80
30
TEMPLATE BUTT LINE
LDW 280-17278-11 (REF)
MS20470DD5(7) (ON-1)
10 TO PHOTO BUTT LINE ON SHEET 4
5
MS20470DD4 (6) (ON-3)
MS20470DD5(ON-1)
MS20470AD4(92) (ON-3)
LDW280-17278-20(ON-1)
LDW280-17341-21 (ON-1)
LDW280-17161-18 (ON-3)
MS20470AD4(10)(ON-1)
PHOTO BUTT LINE
G (ZONE 6J SH5)
G
M
MS20470DD5(13)(ON-3)
MS20470DD5(8)(ON-1)
LDW280-17192-15(ON-3)
NAS1097DD5 (ON-3) CSK IN LDW280-17137-19
MS20470DD5(5)ON-1
MS20470DD5(5) (ON-1)
A1
LDW280-17137-25 (ON-3)
ASSY
COORDINATE WITH LDW280-23900 INSTL
L (ZONE 4J SH 5)
MS20470DD5(4)(ON-1)
F
F (ZONE 7G SH5)
+Z65.906(REF)
ON-3 (SEE NOTE #9)
MS20470DD4(53) ON-3
69
GB511K-08-4 (4)
GN512H-08(4) ON-1
L
K
K (ZONE 4A SH5)
GB511K-08-3(2)
GN512H-08 (2) ON-1
GB511K-08-3 (8)
GN512H-08 (8 (ON-1)
MS20470DD4(17)(ON-3)
MS20470DD4(17)(ON-3)
MS20470DD4(17)(ON-3)
MS20470DD4(17)(ON-3)
MS20470DD4(17)(ON-3)
MS20470DD4(18)(ON-3)
MS20470DD4(17)(ON-3)
MS20470DD4(17)(ON-3)
LDW 280-17164-11 (ON-3)
LDW 280-17730-12 (ON-3)
LDW 280M17228-5(ON-3)N.S.
LDW 280M17229-9(ON-3)F.S.
MS20470DD4(8)(ON-3)
MS20470DD4(35)(ON-3)
MS20470DD4(17)(ON-3)
LDW280-17158-28
MS20470DD4(10)(ON-3)
LDW280-17158-26 (ON-3)
MS20470DD4(17)(ON-3)
MS20470DD4(6)(ON-3)
LDW280M17440-1 (ON-3)
LDW280-17156-26 (ON-3)
LDW280-17156-24 (ON-3)
LDW280-17156-22 (ON-3)
LDW280-17156-20 (ON-3)
LDW280-17157-22 (ON-3)
LDW280-11400-11 (ON-1)
LDW280-17354-14 (ON-3)
LDW280-17157-24 (ON-3)
LDW280-17157-26(ON-3)
1/8 MIN
J
E
3/16 (MIN)
1/16 (MIN)
2/32 (MIN)
.213(MIN)
MS20470DD5(16)(ON-1)
5/32 MIN
MS20470DD5(45)(ON-1)
LDW280-52537-1(INSTL)
-3(ASSY)
VIEW LOOKING INBOARD
J (ZONE 3G SH 5)
(ZONE 7H SH 5) E
LDW 280-23526 (REF)
GB511K-3-6(6)
GN512H-3(6) (ON-1)
+X131.140 LOWER DECK REFERENCE PLANE SEE NOTE 4)
+Z81.00 FWD END BULKHEAD PANEL REFERENCE PLANE (SEE NOTE 4)
LDW280M17414-3 (REF)
LDW280-17137-27(REF)
LDW280-17608-23(REF)
LDW280M17414-5 (ON-1)
LDW280-17608-23 (ON-1)
LDW280-17608-11 (ON-1)
.440±.010
.500±.010
.563±.010
.563±.010
.440±.010
2 EQUAL SPACES
GB511K-4-8 (6)
GN512H-4-(6) (ON-1)
1.741±.010
2 EQUAL SPACES
LDW280-17608-21 NS
LDW280-17608-19 FS (ON-1)
1.000±.010
LDW280-17608-21 (REF)
LDW280-17608-19 (REF)
LDW280-17608-11 (REF)
.530±.010
.500±.010
3.718(REF)
.672±.010
625±.010
3.546(REF)
.827±.010
.672±.010
.625±.010
.530±.010
.500±.010
.500±.010
500±.010
LDW280-23526 (REF)
GB511K-5-7 (4)
GN512H-5 (4) (ON-1)
GB511K-5-9 (4)
GN512H-5 (4)
ON-1
-Z
+Y
+Z
FWD
FOR ENG REF ONLY

NOTES

1. TOLERANCE ON LINES MARKED ◁ TO BE ±1/32 ◁ TO B
2. TOLERANCE ON LOFTED LOCATION OF FASTENERS THRU LDW280-17137-27 TO BE ±1/32 OTHERS TO BE LOCATED FROM PILOT HOLES IN DETAIL PARTS.
4. FOR BASIC JIG DATA SEE LDW280-23511.
5. FASTENER MANUFACTURED HEAD (OTHER THAN CSK ATTACH TO BE ON WEB SIDE UNLESS OTHERWISE SPECIFIED.
6. INSTL. GB511K & GR500A PER LSP14-15306 & LSP-14-15303
7 PERMISSIBLE OIL CAN DEPTH OF WEBS BETWEEN STIFFEN
8. SHIM AS REQD USING AL ALLOY QQ-A-250/4 2024-T3, FINISH 88.
9. INSTALL RIVETS WET & OVERCOAT RIVET SHOP HEADS WITH EPON 919 PER LSP 14-14102.

CODE IDENT NO. 26512
LDW280-52537 SH 3

CODE IDENT NO. 26512
LDW280-52537 SH 3

02/03

NAS 9-1100

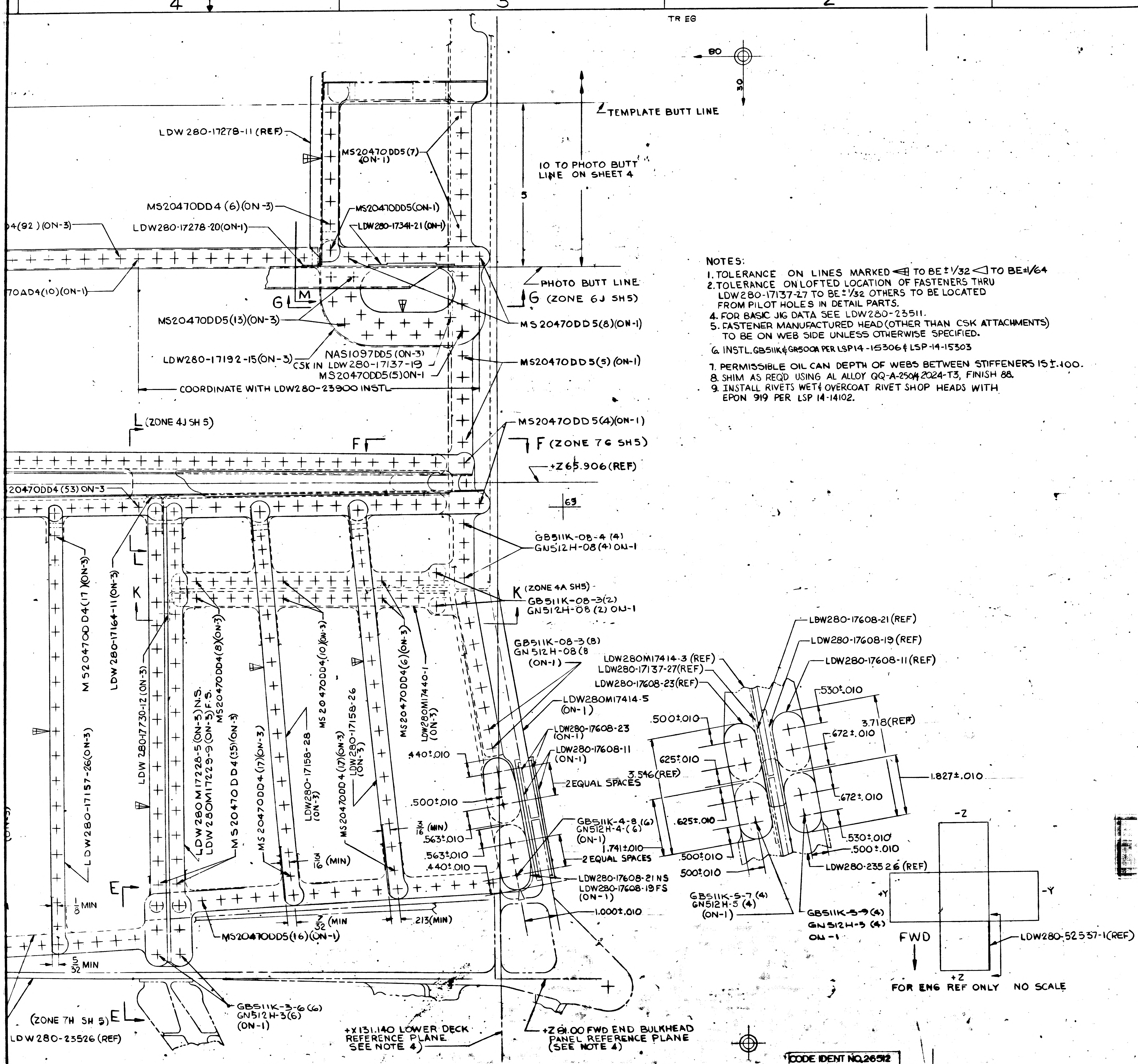
TR EG
80
30
TEMPLATE BUTT LINE
LDW 280-17278-11 (REF)
MS20470DD5(7) (ON-1)
10 TO PHOTO BUTT LINE ON SHEET 4
5
MS20470DD4 (6) (ON-3)
MS20470DD5(ON-1)
4(92) (ON-3)
LDW280-17278-20(ON-1)
LDW280-17341-21 (ON-1)
70AD4(10)(ON-1)
PHOTO BUTT LINE
G (ZONE 6J SH5)
G
M
MS20470DD5(13)(ON-3)
MS20470DD5(8)(ON-1)
LDW280-17192-15(ON-3)
NAS1097DD5 (ON-3)
CSK IN LDW280-17137-19
MS20470DD5(5)ON-1
MS20470DD5(5) (ON-1)
COORDINATE WITH LDW280-23900 INSTL
L (ZONE 4J SH 5)
F
MS20470DD5(4)(ON-1)
F (ZONE 76 SH5)
+Z65.906(REF)
20470DD4 (53) ON-3
69
GB511K-08-4 (4)
GN512H-08(4) ON-1
L
K
K (ZONE 4A SH5)
GB511K-08-3(2)
GN512H-08 (2) ON-1
MS20470DD4(17)(ON-3)
LDW280-17164-11(ON-3)
LDW 280-17730-12 (ON-3)
LDW280M17228-5(ON-3)N.S.
LDW280M17229-9(ON-3)F.S.
MS20470DD4(8)(ON-3)
MS20470DD4(35)(ON-3)
MS20470DD4(17)(ON-3)
LDW280-17158-28
MS20470DD4(10)(ON-3)
LDW280-17158-26
LDW280-17158-28 (ON-3)
MS20470DD4(17)(ON-3)
LDW280-17158-26 (ON-3)
MS20470DD4(6)(ON-3)
LDW280M17440-1 (ON-3)
LDW280-17157-26(ON-3)
GB511K-08-3(8)
GN512H-08(8
(ON-1)
LDW280M17414-3 (REF)
LDW280-17137-27(REF)
LDW280-17608-23(REF)
LDW280M17414-5 (ON-1)
LDW280-17608-23 (ON-1)
LDW280-17608-11 (ON-1)
.440±.010
2 EQUAL SPACES
3.546(REF)
.500±.010
3/16 (MIN)
.563±.010
13/16 (MIN)
.563±.010
.440±.010
GB511K-4-8 (6)
GN512H-4-(6)
(ON-1)
1.741±.010
2 EQUAL SPACES
LDW280-17608-21 NS
LDW280-17608-19 FS
(ON-1)
1.000±.010
E
1/8 MIN
7/32 (MIN
.213(MIN)
MS20470DD5(16)(ON-1)
5/32 MIN
GB511K-3-6(6)
GN512H-3(6)
(ON-1)
(ZONE 7H SH 5) E
LDW 280-23526 (REF)
+X131.140 LOWER DECK REFERENCE PLANE SEE NOTE 4)
+Z81.00 FWD END BULKHEAD PANEL REFERENCE PLANE (SEE NOTE 4)
LDW280-17608-21(REF)
LDW280-17608-19 (REF)
LDW280-17608-11 (REF)
.530±.010
3.718(REF)
.672±.010
.500±.010
625±.010
1.827±.010
.672±.010
.625±.010
.530±.010
.500±.010
.500±.010
500±.010
LDW280-23526 (REF)
GB511K-5-7 (4)
GN512H-5 (4)
(ON-1)
GB511K-5-9 (4)
GN512H-5 (4)
ON-1
-Z
+Y
-Y
+Z
FWD
LDW280-52537-1(REF)
FOR ENG REF ONLY NO SCALE

NOTES:

1. TOLERANCE ON LINES MARKED ◁⊞ TO BE ±1/32 ◁ TO BE ±1/64
2. TOLERANCE ON LOFTED LOCATION OF FASTENERS THRU LDW280-17137-27 TO BE ±1/32 OTHERS TO BE LOCATED FROM PILOT HOLES IN DETAIL PARTS.
4. FOR BASIC JIG DATA SEE LDW280-23511.
5. FASTENER MANUFACTURED HEAD (OTHER THAN CSK ATTACHMENTS) TO BE ON WEB SIDE UNLESS OTHERWISE SPECIFIED.
6. INSTL. GB511K & GR500A PER LSP14-15306 & LSP-14-15303
7. PERMISSIBLE OIL CAN DEPTH OF WEBS BETWEEN STIFFENERS IS ±.100.
8. SHIM AS REQ'D USING AL ALLOY QQ-A-250/4 2024-T3, FINISH 88.
9. INSTALL RIVETS WET & OVERCOAT RIVET SHOP HEADS WITH EPON 919 PER LSP 14-14102.

MANUFACTURING OPERATIONS UNLESS OTHERWISE SPECIFIED NOTES CHECKED ✓ APPLY TO THIS DWG.	
RUBBER STAMP PART NUMBER AND ALL OTHER MARKINGS IN REGION MARKED ⊠ ~~USE BOTH SIDES IF NECESSARY~~.	✓
FILLET AND INSIDE CORNER RADII TOLERANCES .016R TO .062R ± .010 .063R TO .250R ± .015 OVER .250R ± .030	
DEPTH SHOWN FOR TAPPED HOLES IS FULL THDS. 2-3 IMP. THDS. BEYOND PERMISSIBLE	
EXTERNAL THREAD LENGTH SHOWN INCLUDES 2 IMPERFECT THREADS MAX.	
DO NOT CADMIUM PLATE & PAINT HOLES OR SURFACES MARKED WITH DOUBLE ASTERISK.	
MISMATCH STEP OF ± .005 PERMISSIBLE DUE TO CHANGE OF CUTTERS AT INSIDE INTERSECTING SURFACES.	
DIAMETERS MARKED MUST BE CONCENTRIC WITHIN FULL INDICATOR READING.	
HOLES MUST BE KEPT FREE OF CHROME PLATING SOLUTION.	
ALL DIMENSIONS SHOWN TO BE MET AFTER CADMIUM PLATING. THICKNESS OF PLATE .0003 MIN TO .0005 MAX. MIN THICKNESS TO BE .0002 ON THREADED AREAS. NO ALLOWANCES FOR PLATING IN HOLES	
125 √ SURFACE ROUGHNESS INCLUDING REAMED HOLES PER MIL-STD-10	
200 √ FOR ALL DRILLED HOLES	
REMOVE ALL BURRS. BREAK ALL EDGES .015-.031	
INSPECTION INFORMATION MINIMUM PERMISSIBLE [redacted] EDGE DISTANCE IS 1 1/2 FASTENER DIA FROM FASTENER ℄	✓
SYMBOL √ DENOTES SURFACE TO BE MACHINED	
UNLESS OTHERWISE SPECIFIED TOLERANCE ON FLANGES IS ± 1/32	
LENGTHS OF AN, NAS & MS AL ALY RIVETS SHORTER THAN 1 INCH ARE NOT SPECIFIED	✓
TOLERANCE ON LOFTED DELINEATIONS IS ±1/16 EXCEPT AS NOTED	✓

DWG SIZE 34x106

PRINTING INFO ONLY

FULL SIZE SHEET AREA (36x108) = 27.0 SQ. FT.
½ SIZE SHEET AREA (¼ OF FULL) = 6.7 SQ. FT.

PRINT TRIM LINE

LDW280-52537A

LDW280-52537A

03/03

NAS 9-1100

CODE IDENT NO. 26512
LDW280-52537 SH 3

	GRUMMAN AIRCRAFT ENGRG CORP. BETHPAGE, L. I., NEW YORK			
LEM	SIZE J	CODE IDENT NO. 26512	LDW280-52537	A
MODEL OR END ITEM	SCALE FULL		SHEET 3.00	

FOR PHOTO REPRODUCTION K2

ENG 73-7 6-64

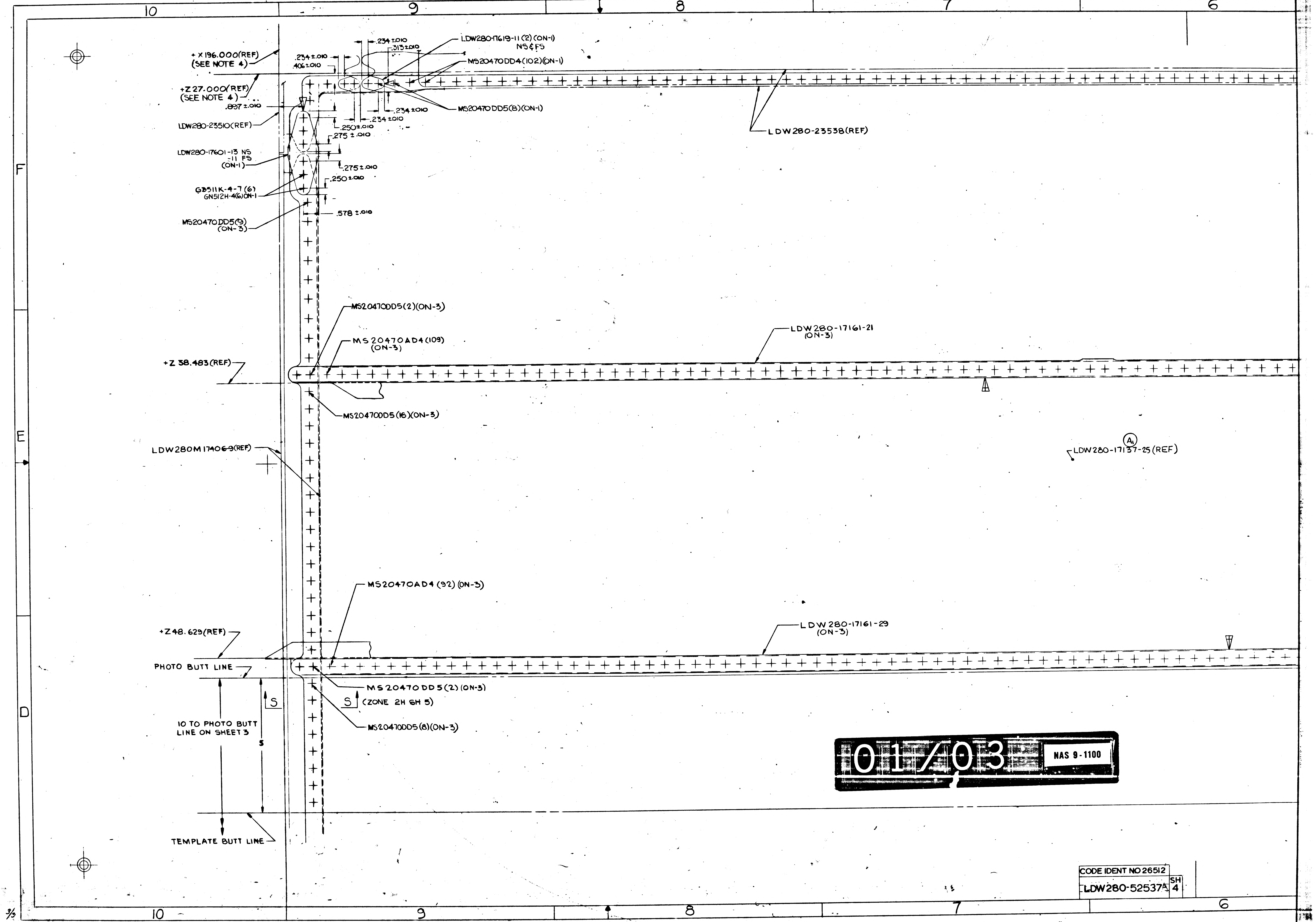
10
9
8
7
6
F
E
D
+X196.000(REF)
(SEE NOTE 4)
+Z27.000(REF)
(SEE NOTE 4)
.234±.010
.406±.010
.234±.010
.313±.010
.897±.010
LDW280-17619-11(2)(ON-1)
NS&FS
MS20470DD4(102)(ON-1)
MS20470DD5(8)(ON-1)
.234±.010
.234±.010
.250±.010
.275±.010
.275±.010
.250±.010
.578±.010
LDW280-23510(REF)
LDW280-17601-13 NS
-11 FS
(ON-1)
GB511K-4-7(6)
GN512H-4(6)ON-1
MS20470DD5(9)
(ON-3)
LDW280-23538(REF)
MS20470DD5(2)(ON-3)
MS20470AD4(109)
(ON-3)
LDW280-17161-21
(ON-3)
+Z38.483(REF)
MS20470DD5(16)(ON-3)
LDW280M17406-9(REF)
A1
LDW280-17137-25(REF)
MS20470AD4(92)(ON-3)
LDW280-17161-29
(ON-3)
+Z48.629(REF)
PHOTO BUTT LINE
MS20470DD5(2)(ON-3)
S
S
(ZONE 2H SH 5)
MS20470DD5(8)(ON-3)
10 TO PHOTO BUTT
LINE ON SHEET 3
5
TEMPLATE BUTT LINE
10
9
8
7
6

01/03

NAS 9-1100

CODE IDENT NO 26512

LDW280-52537A SH 4

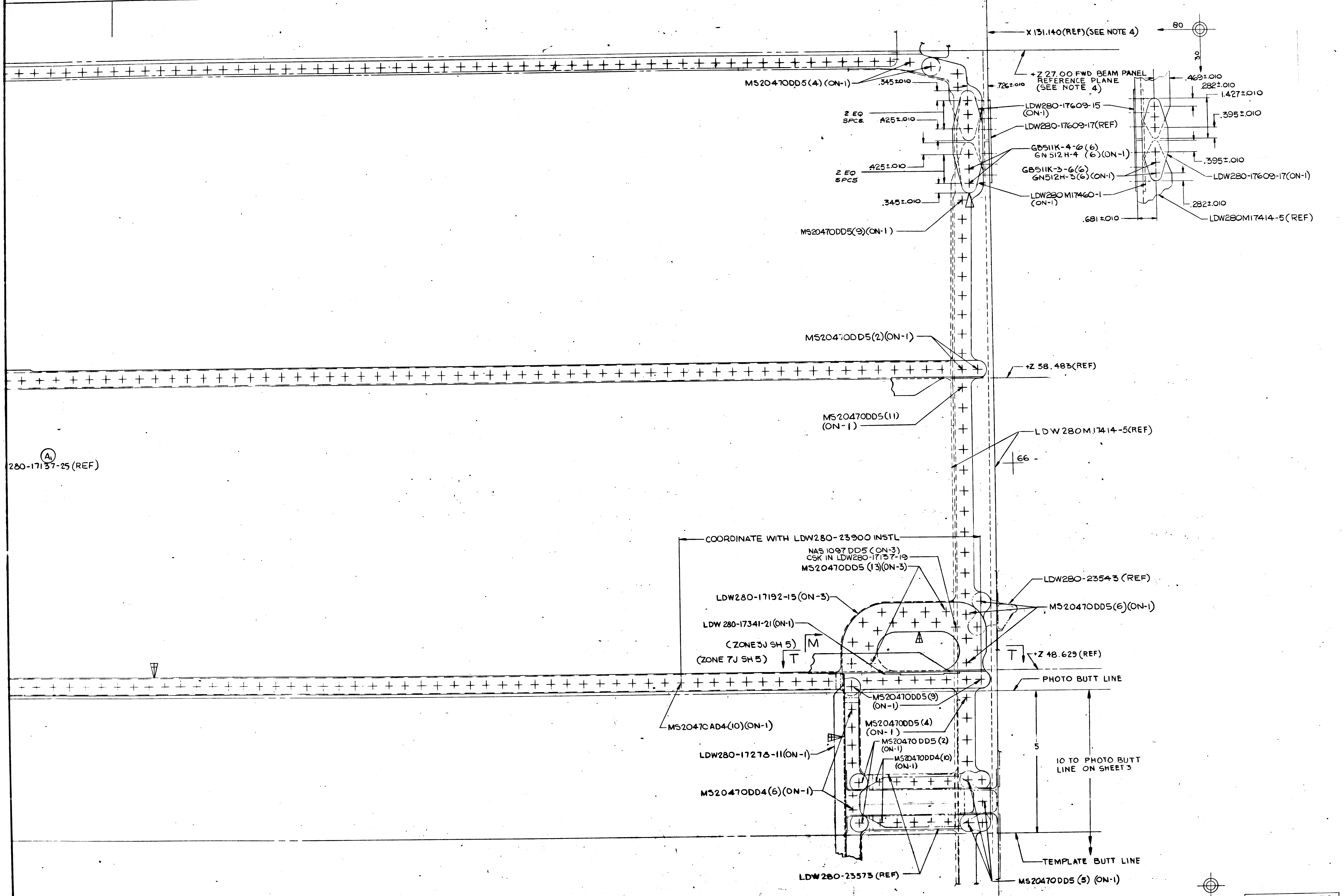

6
5
4
3
2
TR EG
X 131.140(REF)(SEE NOTE 4)
80
30
+Z 27.00 FWD BEAM PANEL REFERENCE PLANE (SEE NOTE 4)
MS20470DD5(4)(ON-1)
.345±.010
.726±.010
2 EQ SPCS.
.425±.010
LDW280-17609-15 (ON-1)
LDW280-17609-17(REF)
GB511K-4-6(6) GN 512H-4 (6)(ON-1)
2 EQ SPCS
.425±.010
GB511K-3-6(6) GN512H-3(6)(ON-1)
.345±.010
LDW280 M17460-1 (ON-1)
.469±.010
.282±.010
1.427±.010
.395±.010
.395±.010
LDW280-17609-17(ON-1)
.282±.010
.681±.010
LDW280M17414-5(REF)
MS20470DD5(9)(ON-1)
MS20470DD5(2)(ON-1)
+Z 58.483(REF)
MS20470DD5(11) (ON-1)
LDW280M17414-5(REF)
66
280-17137-25 (REF)
A1
COORDINATE WITH LDW280-23900 INSTL
NAS 1097 DD5 (ON-3) CSK IN LDW280-17137-19
MS20470DD5 (13)(ON-3)
LDW280-23543 (REF)
LDW280-17192-15(ON-3)
MS20470DD5(6)(ON-1)
LDW 280-17341-21(ON-1)
(ZONE3J SH 5)
M
(ZONE 7J SH 5)
T
T
+Z 48.629 (REF)
PHOTO BUTT LINE
MS20470DD5(9) (ON-1)
MS20470AD4(10)(ON-1)
MS20470DD5(4) (ON-1)
MS20470 DD5 (2) (ON-1)
5
LDW280-17278-11(ON-1)
MS20470DD4(10) (ON-1)
10 TO PHOTO BUTT LINE ON SHEET 3
MS20470DD4(6)(ON-1)
TEMPLATE BUTT LINE
LDW280-23573 (REF)
MS20470DD5 (5) (ON-1)

DE IDENT NO 26512
DW280-52537A SH 4

02/03

NAS 9-1100

CODE IDENT NO.26512
LDW280-52537A SH 4

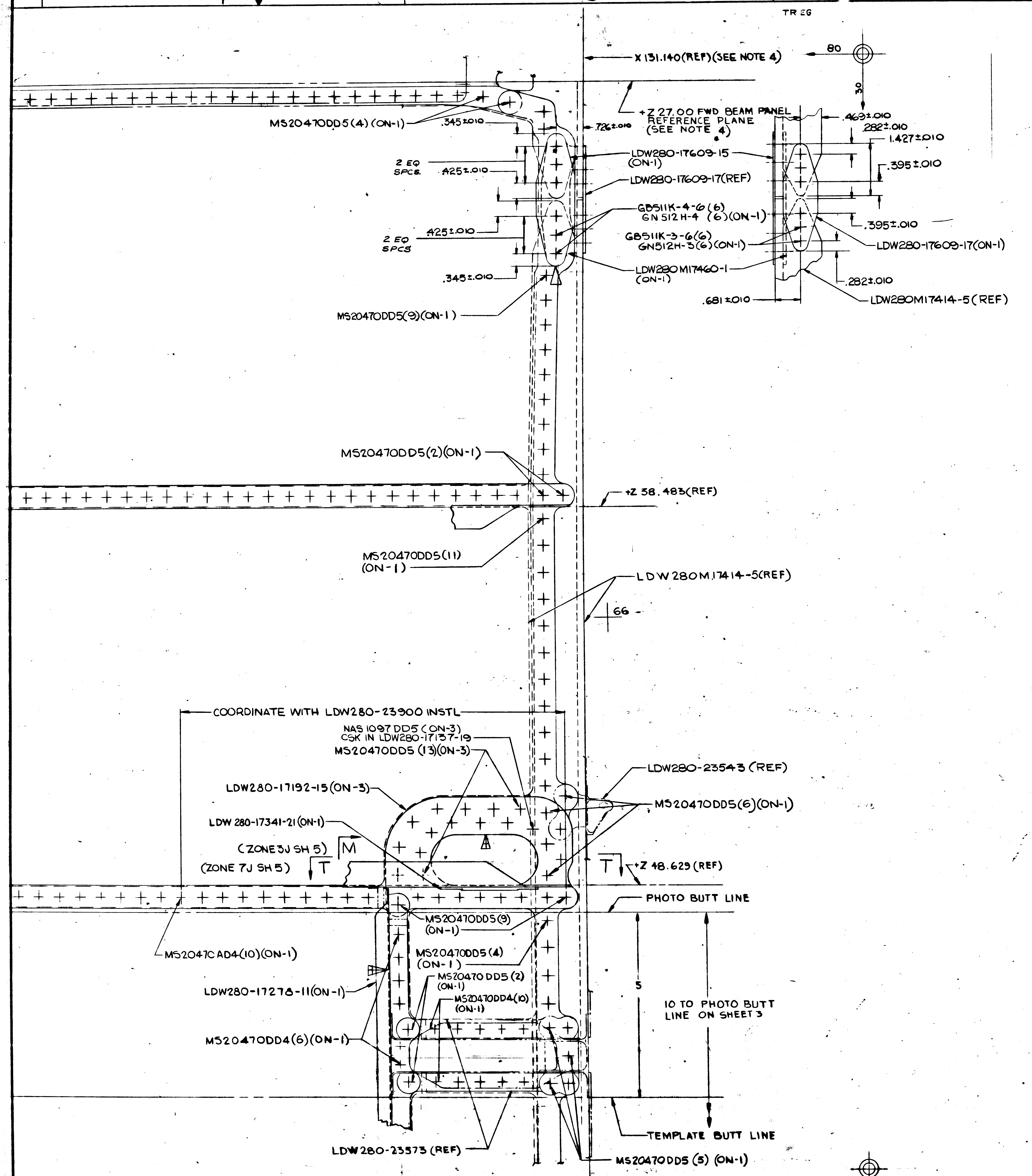
4
3
2
TR EG
X 131.140(REF)(SEE NOTE 4)
80
30
+Z 27.00 FWD BEAM PANEL REFERENCE PLANE (SEE NOTE 4)
MS20470DD5(4)(ON-1)
.345±.010
.726±.010
.469±.010
.282±.010
1.427±.010
.395±.010
2 EQ SPCS.
.425±.010
LDW280-17609-15 (ON-1)
LDW280-17609-17(REF)
GB511K-4-6(6) GN512H-4 (6)(ON-1)
GB511K-3-6(6) GN512H-3(6)(ON-1)
.425±.010
2 EQ SPCS
.395±.010
LDW280-17609-17(ON-1)
.345±.010
LDW280M17460-1 (ON-1)
.282±.010
.681±.010
LDW280M17414-5(REF)
MS20470DD5(9)(ON-1)
MS20470DD5(2)(ON-1)
+Z 58.483(REF)
MS20470DD5(11) (ON-1)
LDW280M17414-5(REF)
66
COORDINATE WITH LDW280-23900 INSTL
NAS 1097 DD5 (ON-3) CSK IN LDW280-17137-19
MS20470DD5 (13)(ON-3)
LDW280-23543 (REF)
LDW280-17192-15(ON-3)
MS20470DD5(6)(ON-1)
LDW 280-17341-21(ON-1)
(ZONE 3J SH 5)
M
(ZONE 7J SH 5)
T
T
+Z 48.629 (REF)
PHOTO BUTT LINE
MS20470DD5(9) (ON-1)
MS20470AD4(10)(ON-1)
MS20470DD5(4) (ON-1)
MS20470 DD5 (2) (ON-1)
MS20470DD4(10) (ON-1)
LDW280-17278-11(ON-1)
5
10 TO PHOTO BUTT LINE ON SHEET 3
MS20470DD4(6)(ON-1)
TEMPLATE BUTT LINE
LDW280-23573 (REF)
MS20470DD5 (5) (ON-1)
4
3

MANUFACTURING OPERATIONS
UNLESS OTHERWISE SPECIFIED
NOTES CHECKED ✓ APPLY TO THIS DWG.

PART NUMBER AND ALL OTHER MARKINGS IN REGION MARKED ☒ USE BOTH SIDES IF NECESSARY.

FILLET AND INSIDE CORNER RADII TOLERANCES
.016R TO .062R ± .010
.063R TO .250R ± .015
OVER .250R ± .030

DEPTH SHOWN FOR TAPPED HOLES IS FULL THDS. 2-3 IMP. THDS. BEYOND PERMISSIBLE

EXTERNAL THREAD LENGTH SHOWN INCLUDES 2 IMPERFECT THREADS MAX.

DO NOT CADMIUM PLATE & PAINT HOLES OR SURFACES MARKED WITH DOUBLE ASTERISK.

MISMATCH STEP OF ± .005 PERMISSIBLE DUE TO CHANGE OF CUTTERS AT INSIDE INTERSECTING SURFACES.

DIAMETERS MARKED MUST BE CONCENTRIC WITHIN FULL INDICATOR READING.

HOLES MUST BE KEPT FREE OF CHROME PLATING SOLUTION.

ALL DIMENSIONS SHOWN TO BE MET AFTER CADMIUM PLATING. THICKNESS OF PLATE .0003 MIN TO .0005 MAX. MIN THICKNESS TO BE .0002 ON THREADED AREAS. NO ALLOWANCES FOR PLATING IN HOLES

125 SURFACE ROUGHNESS INCLUDING REAMED HOLES PER MIL-STD-10

200 FOR ALL DRILLED HOLES

REMOVE ALL BURRS. BREAK ALL EDGES .015-.031

INSPECTION INFORMATION MINIMUM PERMISSIBLE AVERAGE EDGE DISTANCE MARKED IS

SYMBOL √ DENOTES SURFACE TO BE MACHINED

UNLESS OTHERWISE SPECIFIED TOLERANCE ON FLANGES IS ± 1/32

LENGTHS OF AN, NAS & MS AL ALY RIVETS SHORTER THAN 1 INCH ARE NOT SPECIFIED

TOLERANCE ON LOFTED DELINEATIONS IS

DWG SIZE 34x 106
PRINTING INFO ONLY
FULL SIZE SHEET AREA (36x 108) = 27.0 SQ. FT.
½ SIZE SHEET AREA (¼ OF FULL) = 6.7 SQ. FT.
PRINT TRIM LINE

F
E
D

LDW280-52537A

LDW280-52537A

03/03 NAS 9-1100

CODE IDENT NO. 26512
LDW280-52537A SH 4

	GRUMMAN AIRCRAFT ENGRG CORP. BETHPAGE, L. I., NEW YORK			
LEM	SIZE J	CODE IDENT NO. 26512	LDW280-52537	A
MODEL OR END ITEM	SCALE FULL		SHEET 4.00	

FOR PHOTO REPRODUCTION
K2
ENG 73-7 6-64

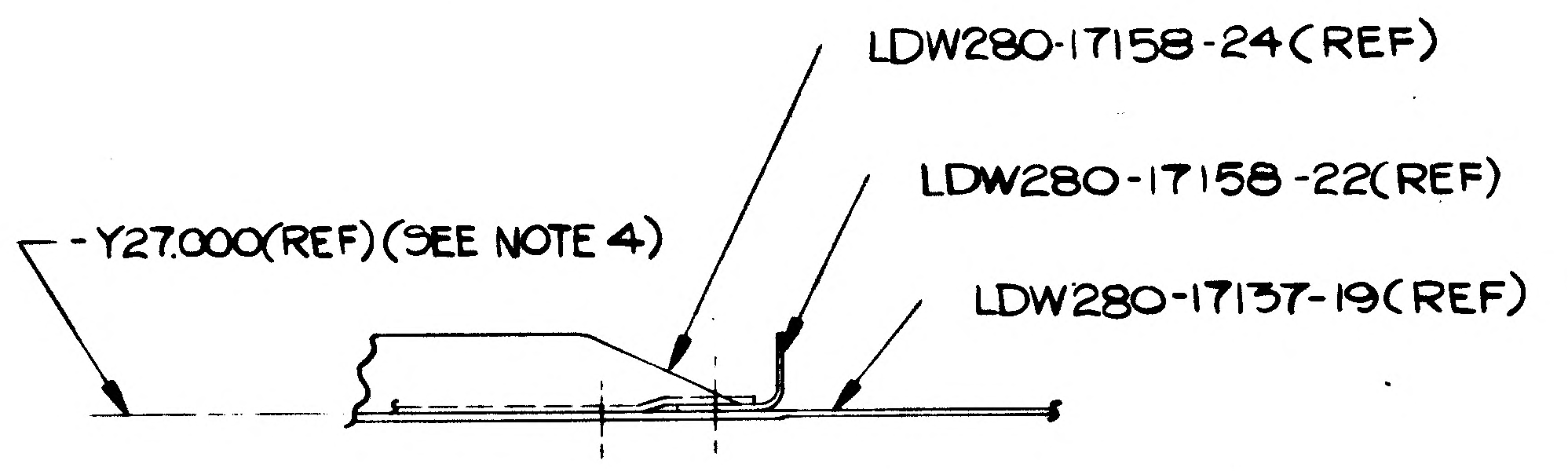
LDW280-17158-24(REF)
LDW280-17158-22(REF)
-Y27.000(REF)(SEE NOTE 4)
LDW280-17137-19(REF)

SECT C-C (ZONE 9A SH 3)

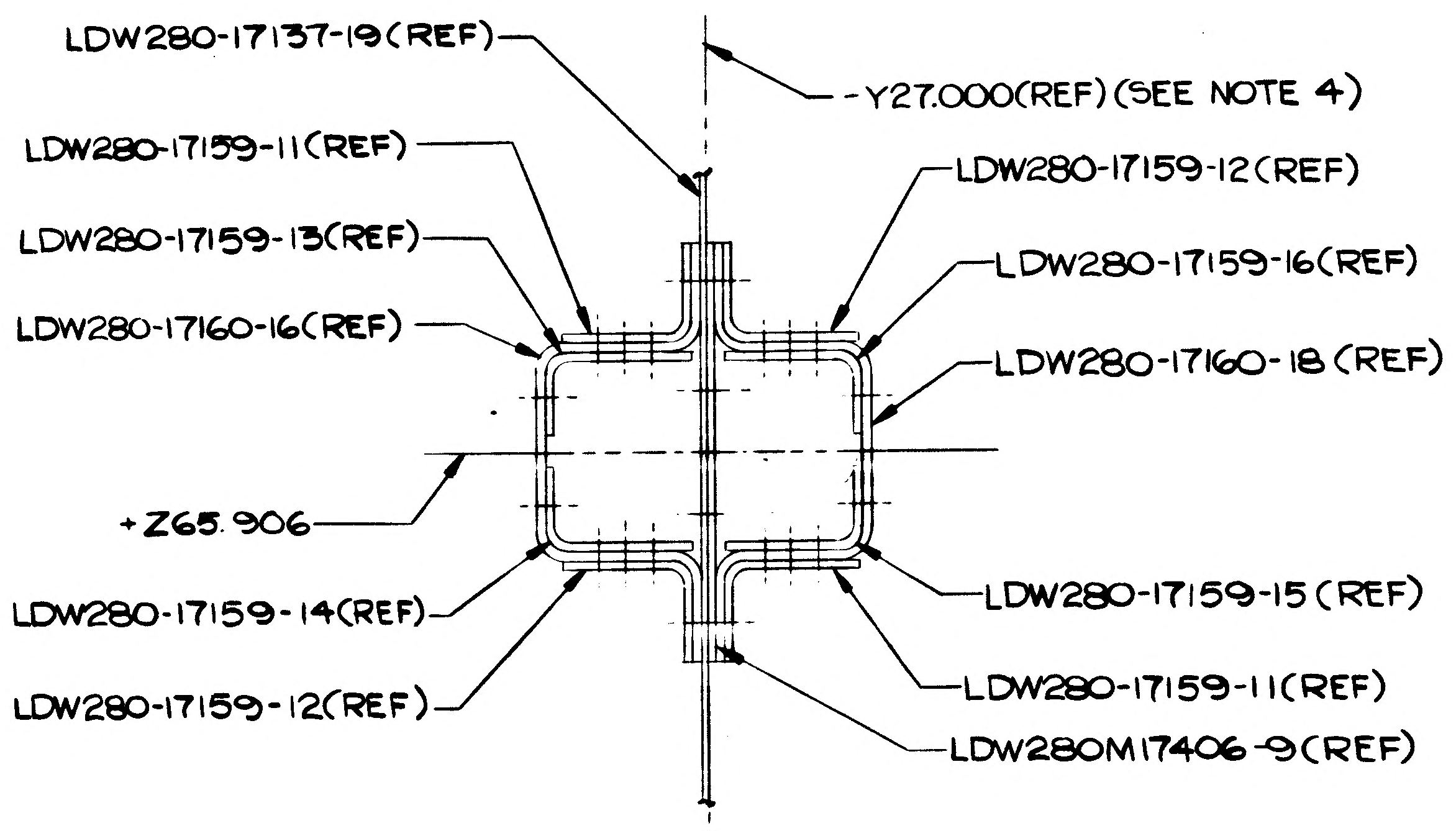
LDW280-17137-19(REF)
-Y27.000(REF)(SEE NOTE 4)
LDW280-17159-11(REF)
LDW280-17159-12(REF)
LDW280-17159-13(REF)
LDW280-17159-16(REF)
LDW280-17160-16(REF)
LDW280-17160-18(REF)
+Z65.906
LDW280-17159-15(REF)
LDW280-17159-14(REF)
LDW280-17159-11(REF)
LDW280-17159-12(REF)
LDW280M17406-9(REF)

SECT. A-A (ZONE 9B SH 3)

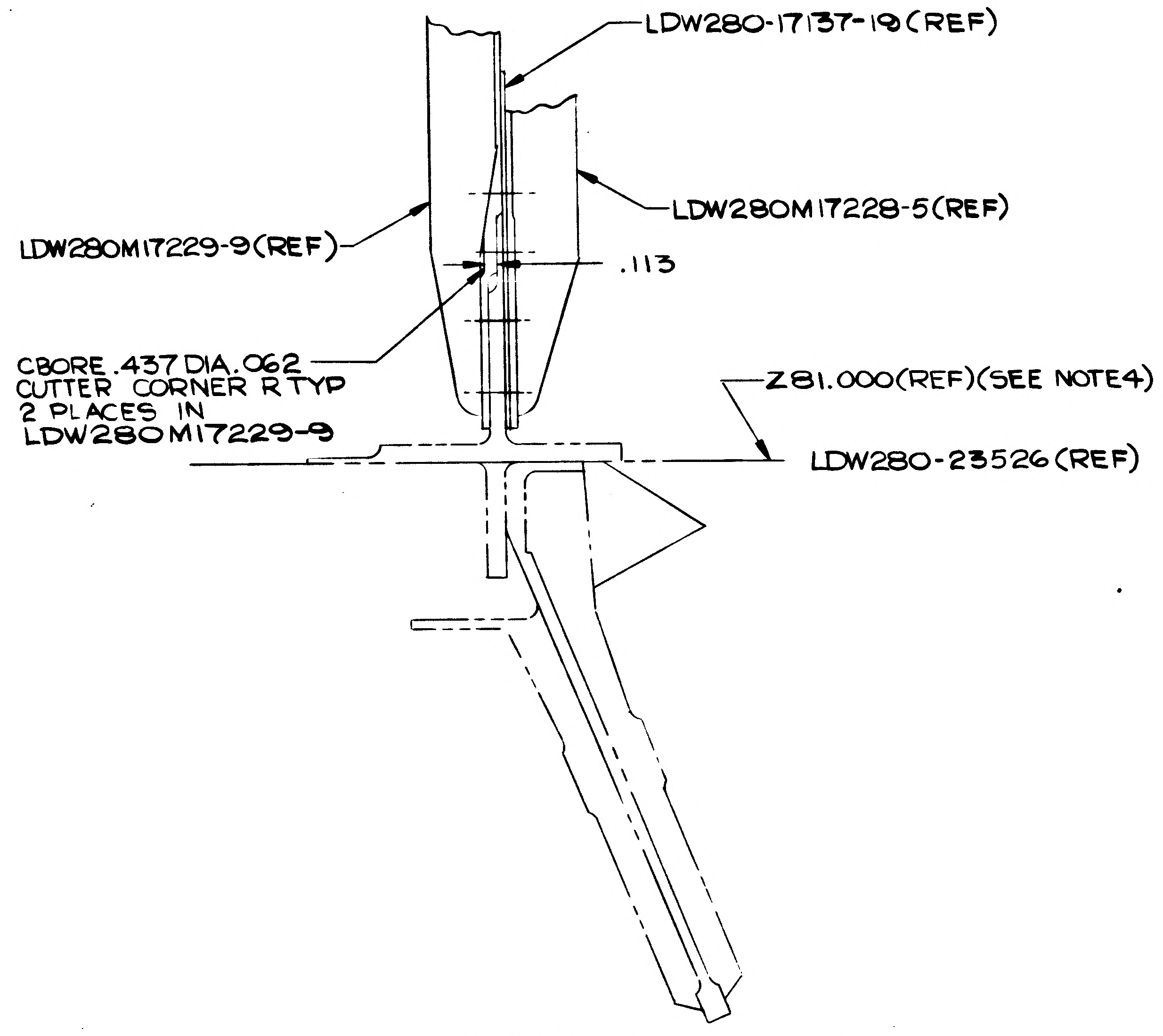
LDW280-17137-19(REF)
LDW280M17228-5(REF)
LDW280M17229-9(REF)
.113
CBORE .437 DIA .062
CUTTER CORNER R TYP
2 PLACES IN
LDW280M17229-9
Z81.000(REF)(SEE NOTE 4)
LDW280-23526(REF)

SECT. E-E (ZONE 4A SH 3)

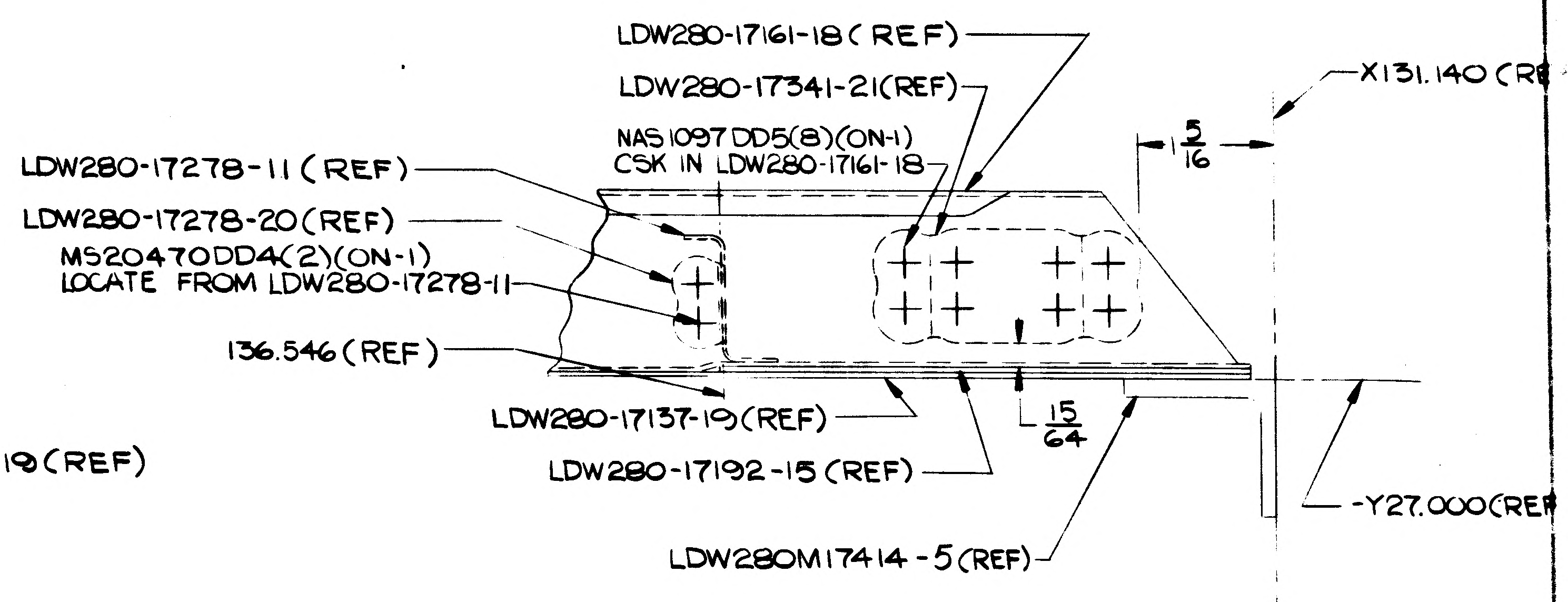
LDW280-17161-18(REF)
LDW280-17341-21(REF)
NAS1097DD5(8)(ON-1)
CSK IN LDW280-17161-18
X131.140(R
1 5/16
LDW280-17278-11(REF)
LDW280-17278-20(REF)
MS20470DD4(2)(ON-1)
LOCATE FROM LDW280-17278-11
136.546(REF)
LDW280-17137-19(REF)
15/64
LDW280-17192-15(REF)
-Y27.000(RE
LDW280M17414-5(REF)

SECT G-G (ZONE 3C SH 3)(SHOWN)
SECT T-T (ZONE 3D SH 4)(OPP)

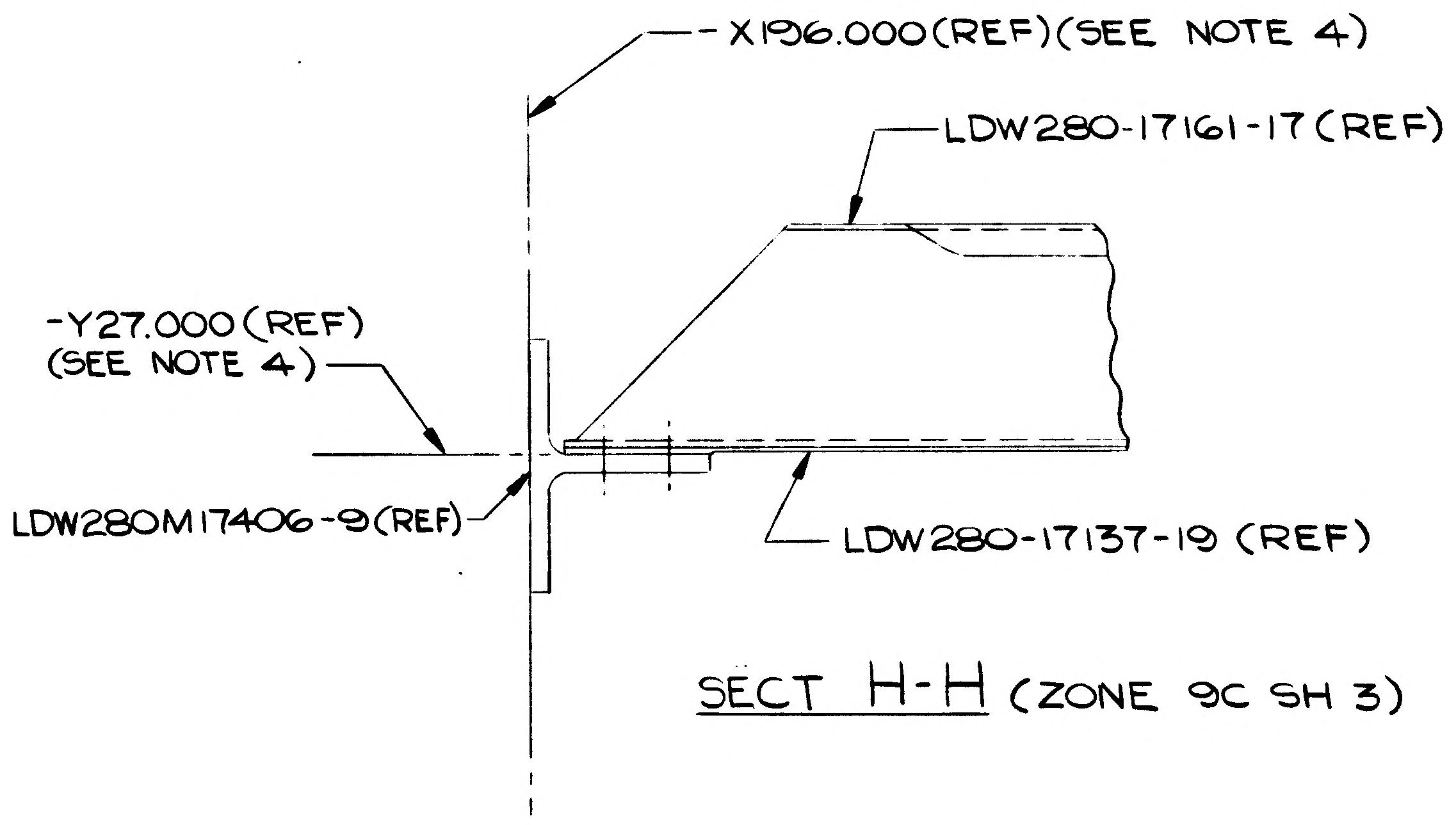
X196.000(REF)(SEE NOTE 4)
LDW280-17161-17(REF)
-Y27.000(REF)
(SEE NOTE 4)
LDW280M17406-9(REF)
LDW280-17137-19(REF)

SECT H-H (ZONE 9C SH 3)

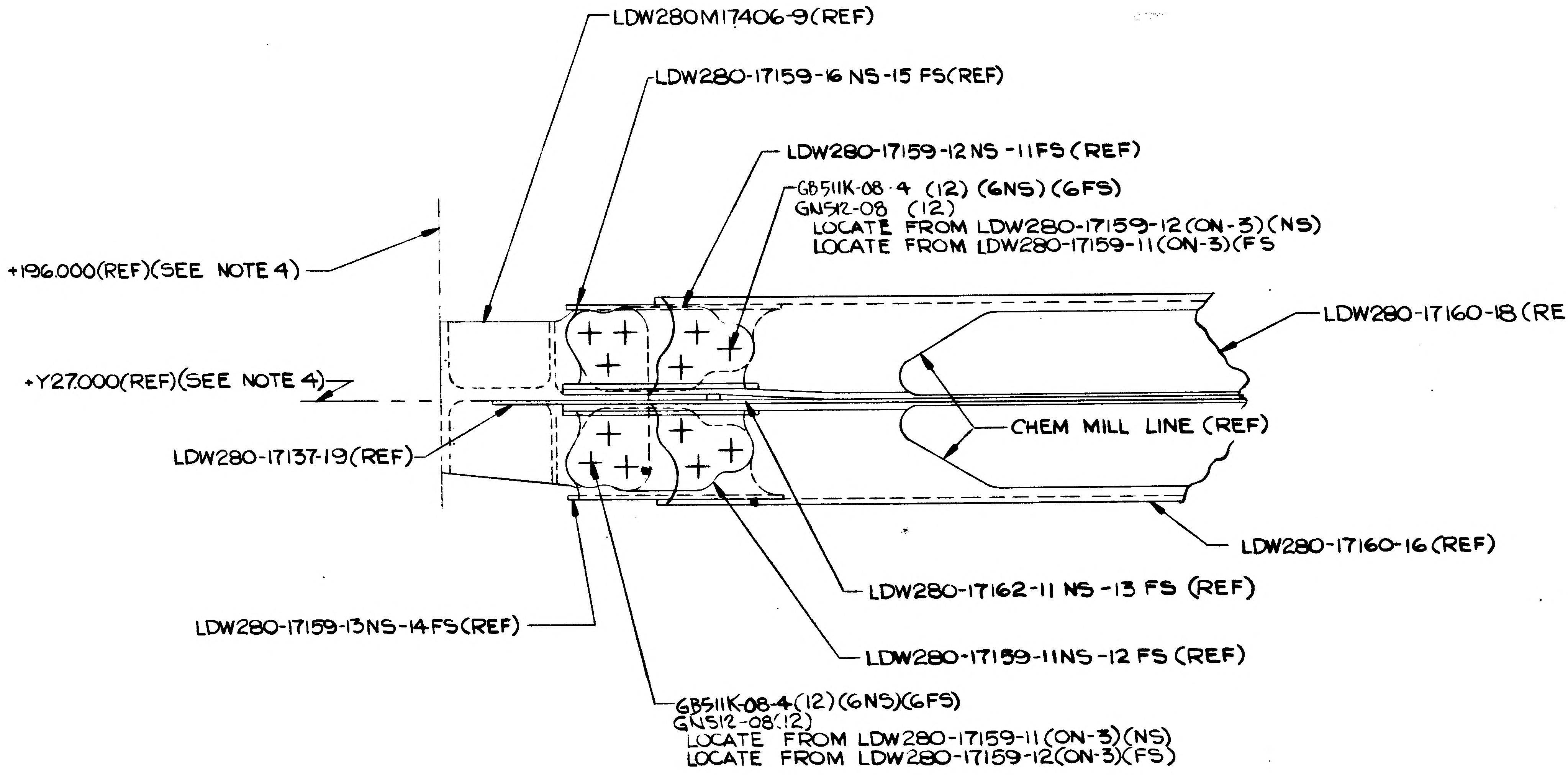
LDW280M17406-9(REF)
LDW280-17159-16 NS-15 FS(REF)
LDW280-17159-12 NS-11 FS(REF)
GB511K-08-4 (12) (6NS) (6FS)
GN512-08 (12)
LOCATE FROM LDW280-17159-12(ON-3)(NS)
LOCATE FROM LDW280-17159-11(ON-3)(FS
+196.000(REF)(SEE NOTE 4)
LDW280-17160-18(REF)
+Y27.000(REF)(SEE NOTE 4)
CHEM MILL LINE (REF)
LDW280-17137-19(REF)
LDW280-17160-16(REF)
LDW280-17162-11 NS-13 FS (REF)
LDW280-17159-13NS-14FS(REF)
LDW280-17159-11NS-12 FS (REF)
GB511K-08-4(12)(6NS)(6FS)
GN512-08(12)
LOCATE FROM LDW280-17159-11(ON-3)(NS)
LOCATE FROM LDW280-17159-12(ON-3)(FS)

SECT. B-B (ZONE 9B SH 3)

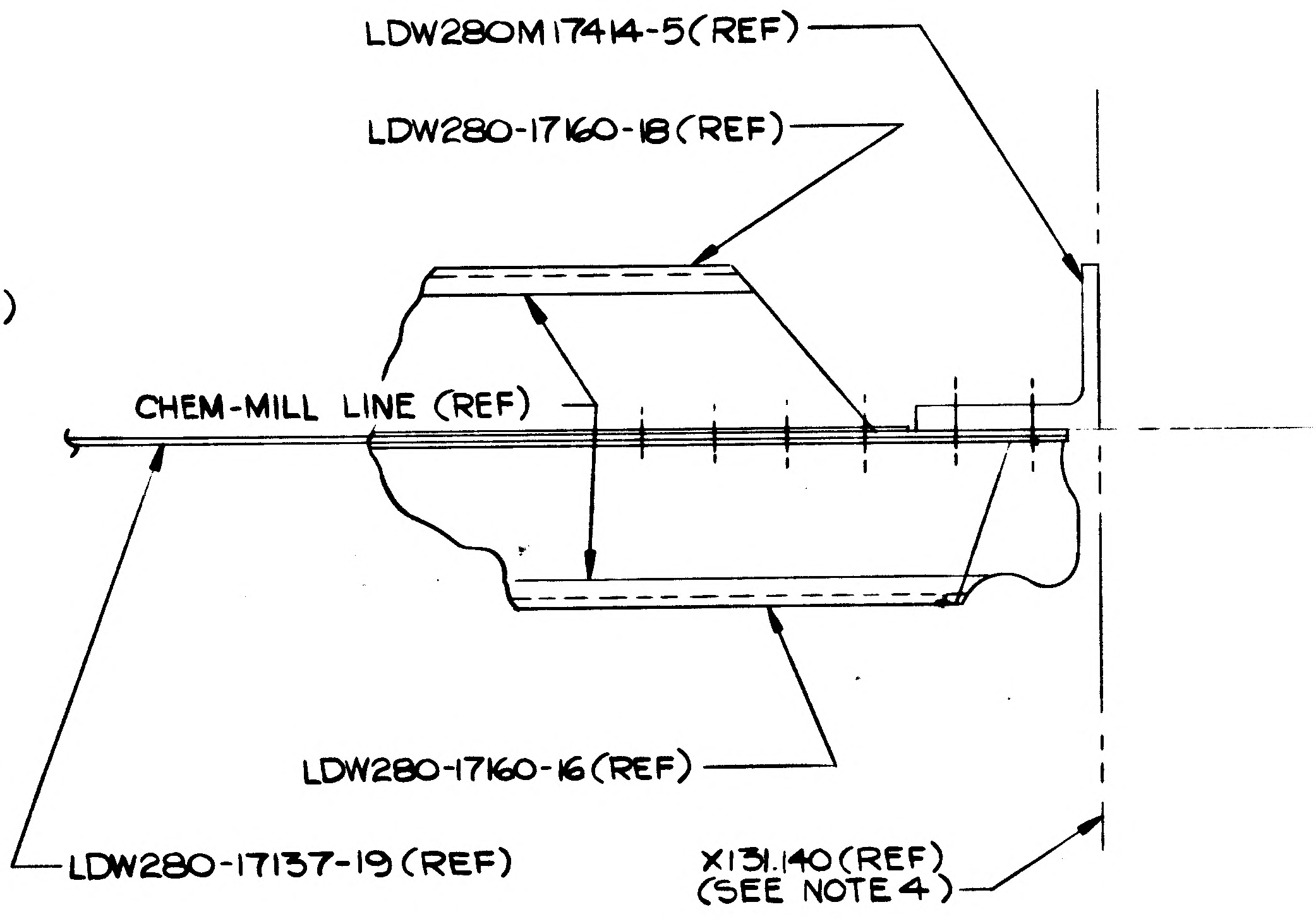
LDW280M17414-5(REF)
LDW280-17160-18(REF)
CHEM-MILL LINE (REF)
LDW280-17160-16(REF)
LDW280-17137-19(REF)
X131.140(REF)
(SEE NOTE 4)

SECT. F-F (ZONE 3B SH 3)

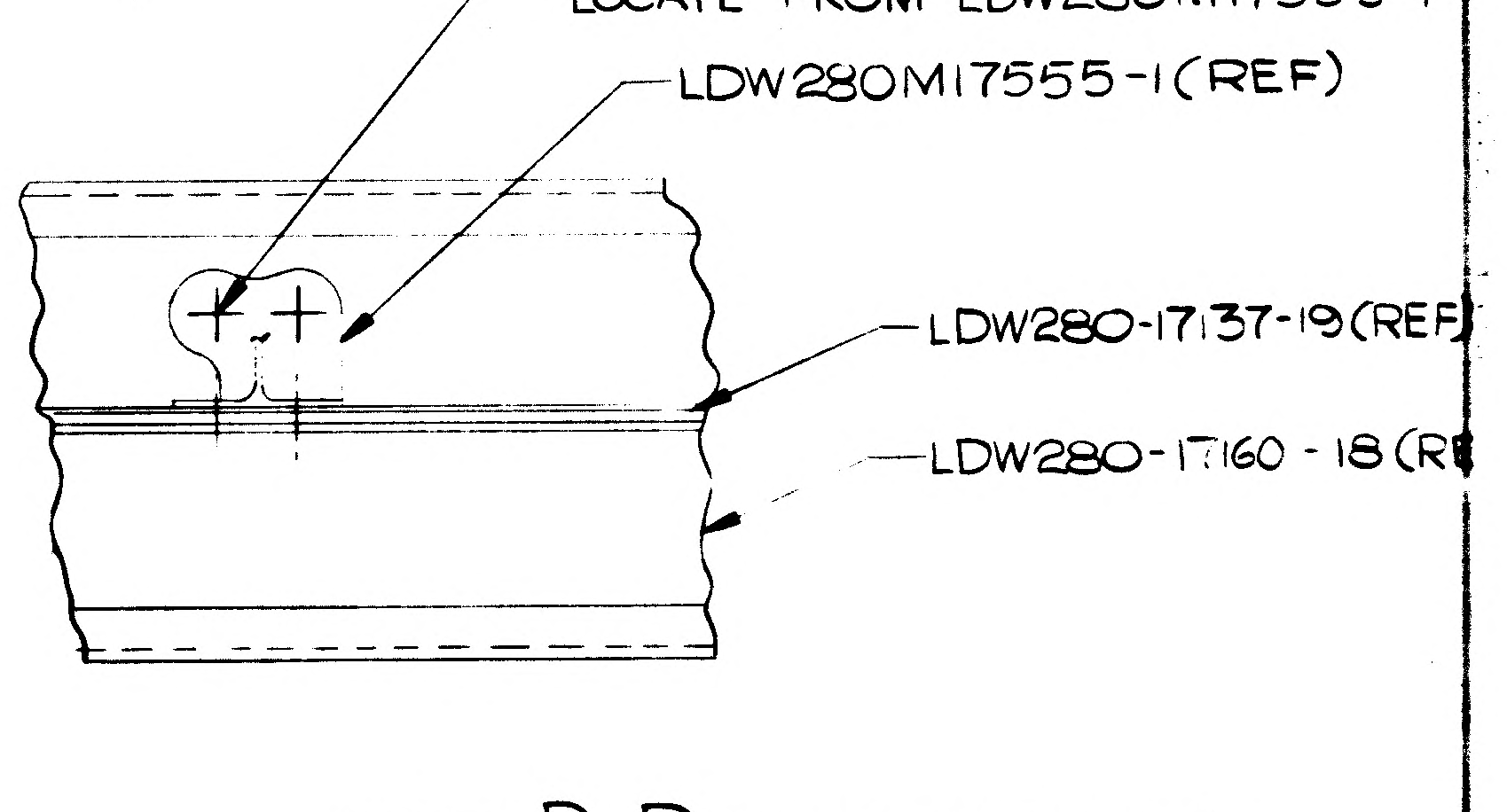
MS20470DD4(2)(ON-3) SEE NOTE
LOCATE FROM LDW280M17555-1
LDW280M17555-1(REF)
LDW280-17137-19(REF
LDW280-17160-18(R

SECT D-D (ZONE 7B SH 3)

01/03 NAS 9-1100

CODE IDENT NO 26512
LDW280-52537
SH 5

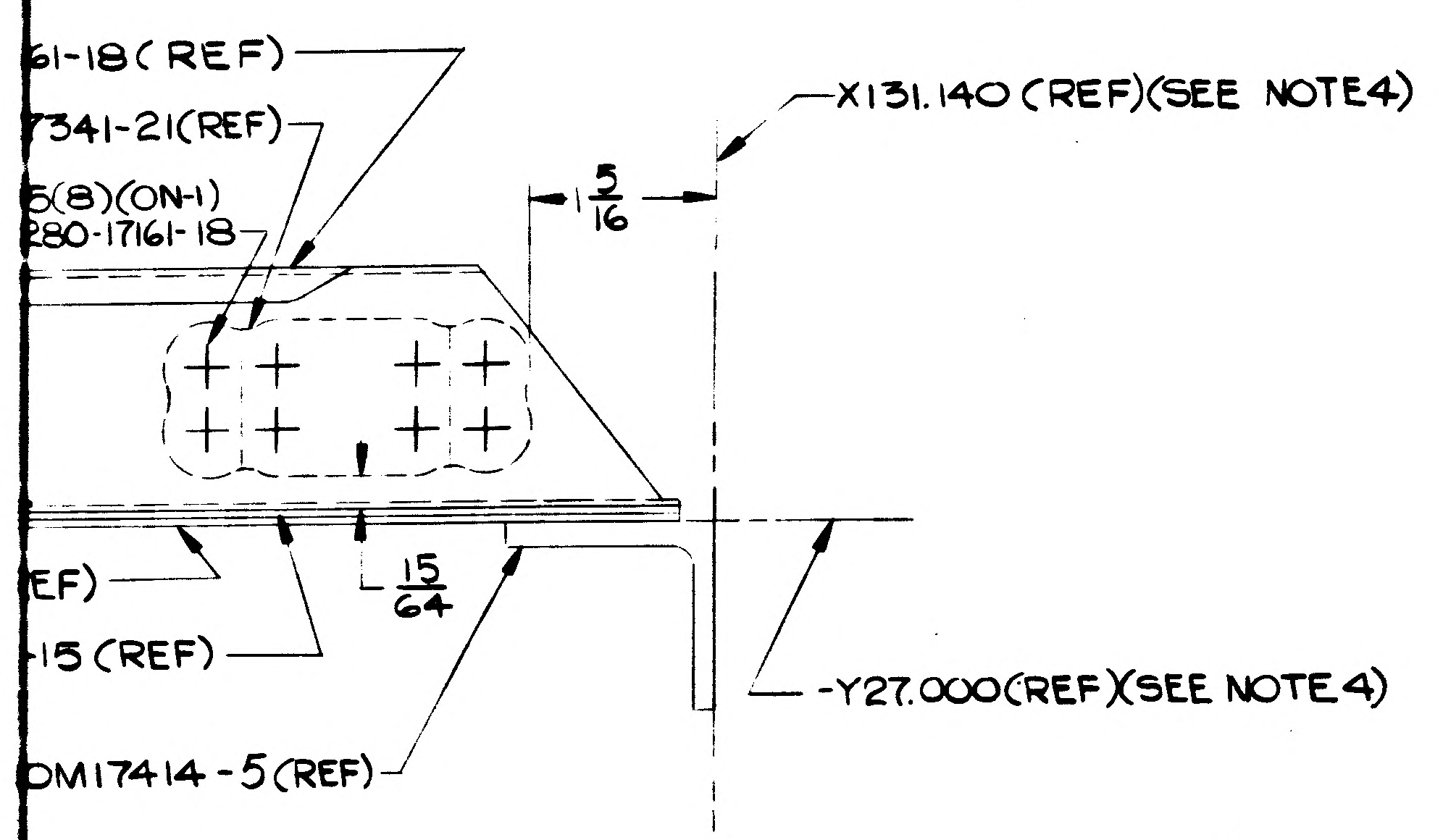
61-18 (REF)
7341-21(REF)
5(8)(ON-1)
280-17161-18
X131.140 (REF)(SEE NOTE4)
1 5/16
EF)
-15 (REF)
15/64
-Y27.000(REF)(SEE NOTE 4)
DM17414-5(REF)

SECT G-G (ZONE 3C SH 3)(SHOWN)
SECT T-T (ZONE 3D SH4)(OPP)

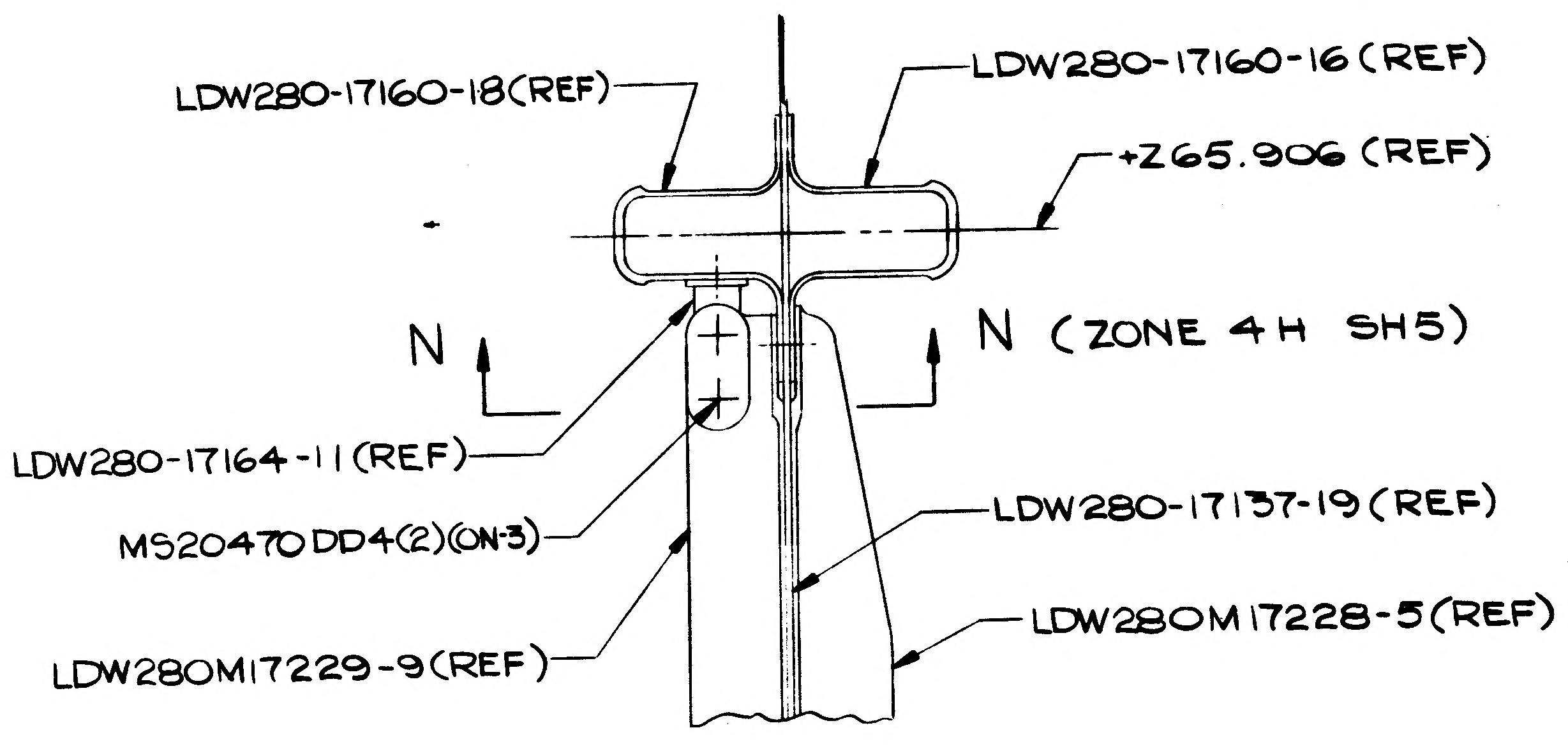
LDW280-17160-18(REF)
LDW280-17160-16 (REF)
+Z65.906 (REF)
N
N (ZONE 4H SH5)
LDW280-17164-11 (REF)
MS20470DD4(2)(ON-3)
LDW280-17137-19 (REF)
LDW280M17228-5(REF)
LDW280M17229-9(REF)

SECT L-L (ZONE 4B SH 3)

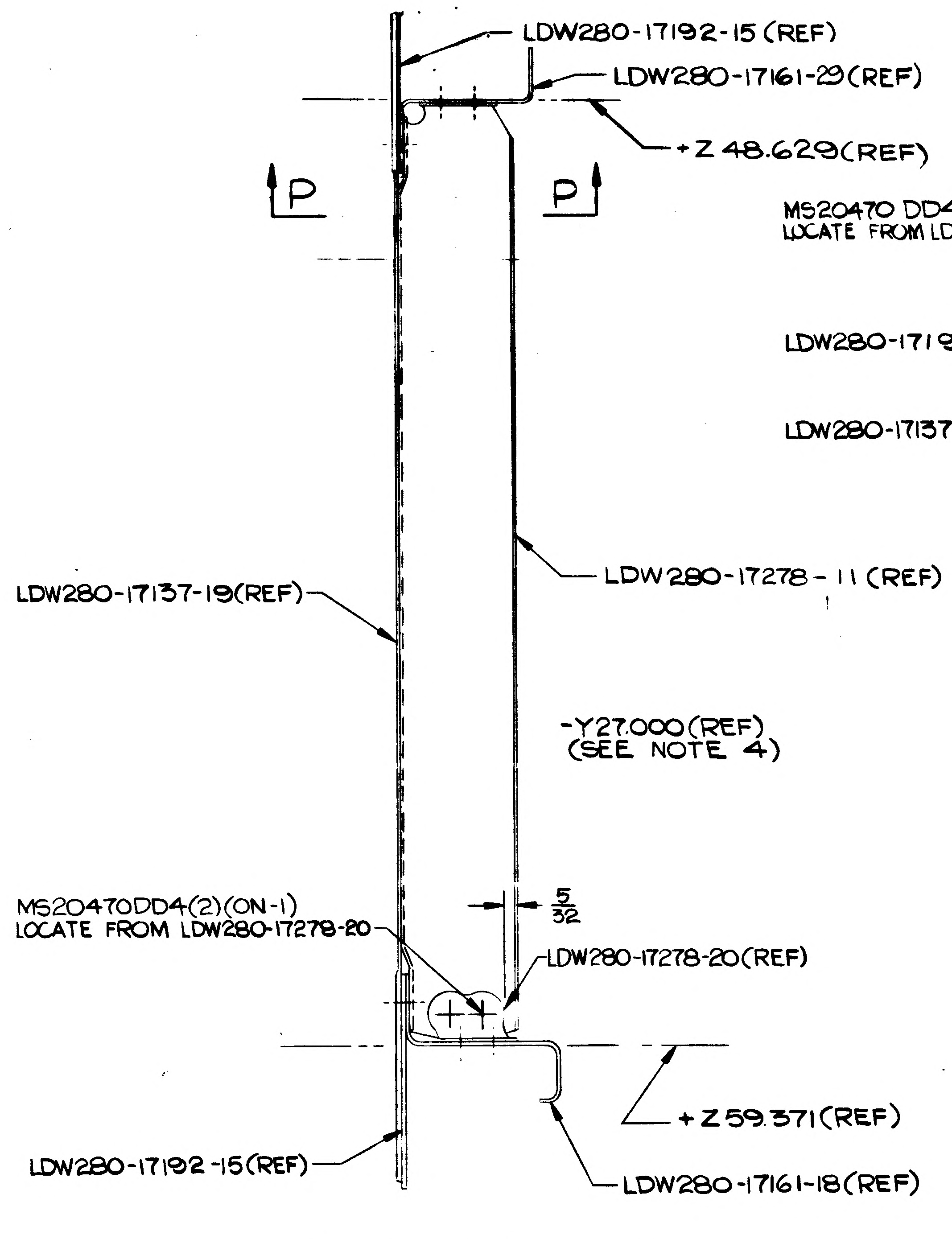
LDW280-17192-15 (REF)
LDW280-17161-29 (REF)
+Z 48.629 (REF)
P
P
LDW280-17137-19(REF)
LDW280-17278-11 (REF)
-Y27.000(REF)
(SEE NOTE 4)
5/32
MS20470DD4(2)(ON-1)
LOCATE FROM LDW280-17278-20
LDW280-17278-20(REF)
+Z59.371(REF)
LDW280-17192-15(REF)
LDW280-17161-18(REF)

SECT M-M (ZONE 4D SH 4)

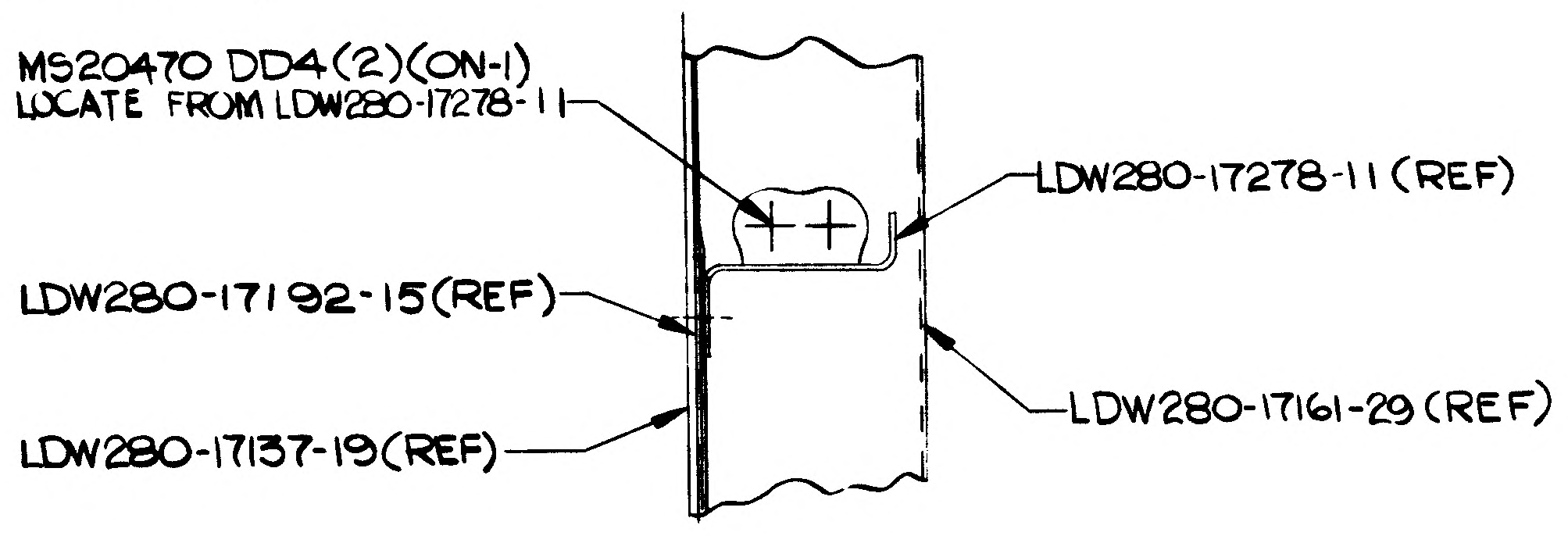
MS20470 DD4(2)(ON-1)
LOCATE FROM LDW280-17278-11
LDW280-17278-11 (REF)
LDW280-17192-15(REF)
LDW280-17161-29 (REF)
LDW280-17137-19(REF)

SECT P-P

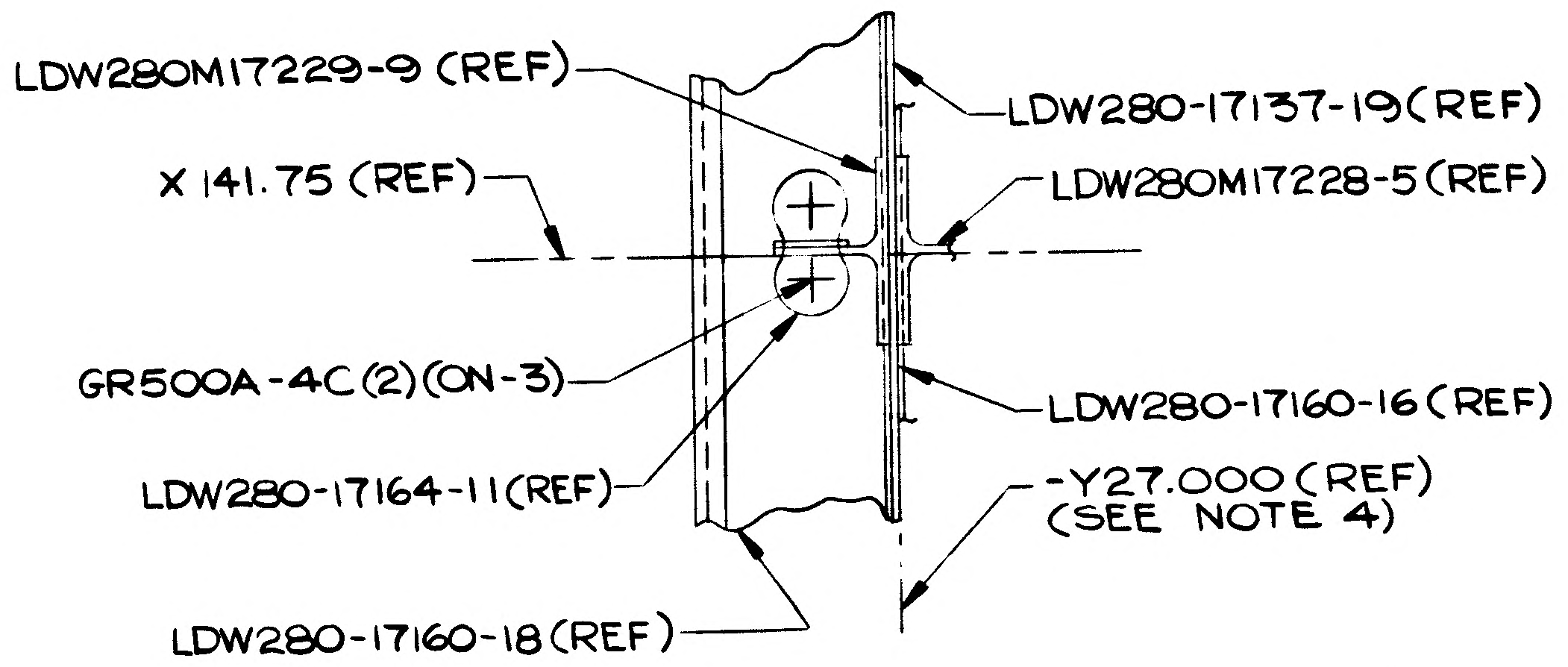
LDW280M17229-9 (REF)
LDW280-17137-19(REF)
X 141.75 (REF)
LDW280M17228-5 (REF)
GR500A-4C(2)(ON-3)
LDW280-17160-16(REF)
LDW280-17164-11(REF)
-Y27.000 (REF)
(SEE NOTE 4)
LDW280-17160-18 (REF)

SECT N-N (ZONE 4J SH 5)

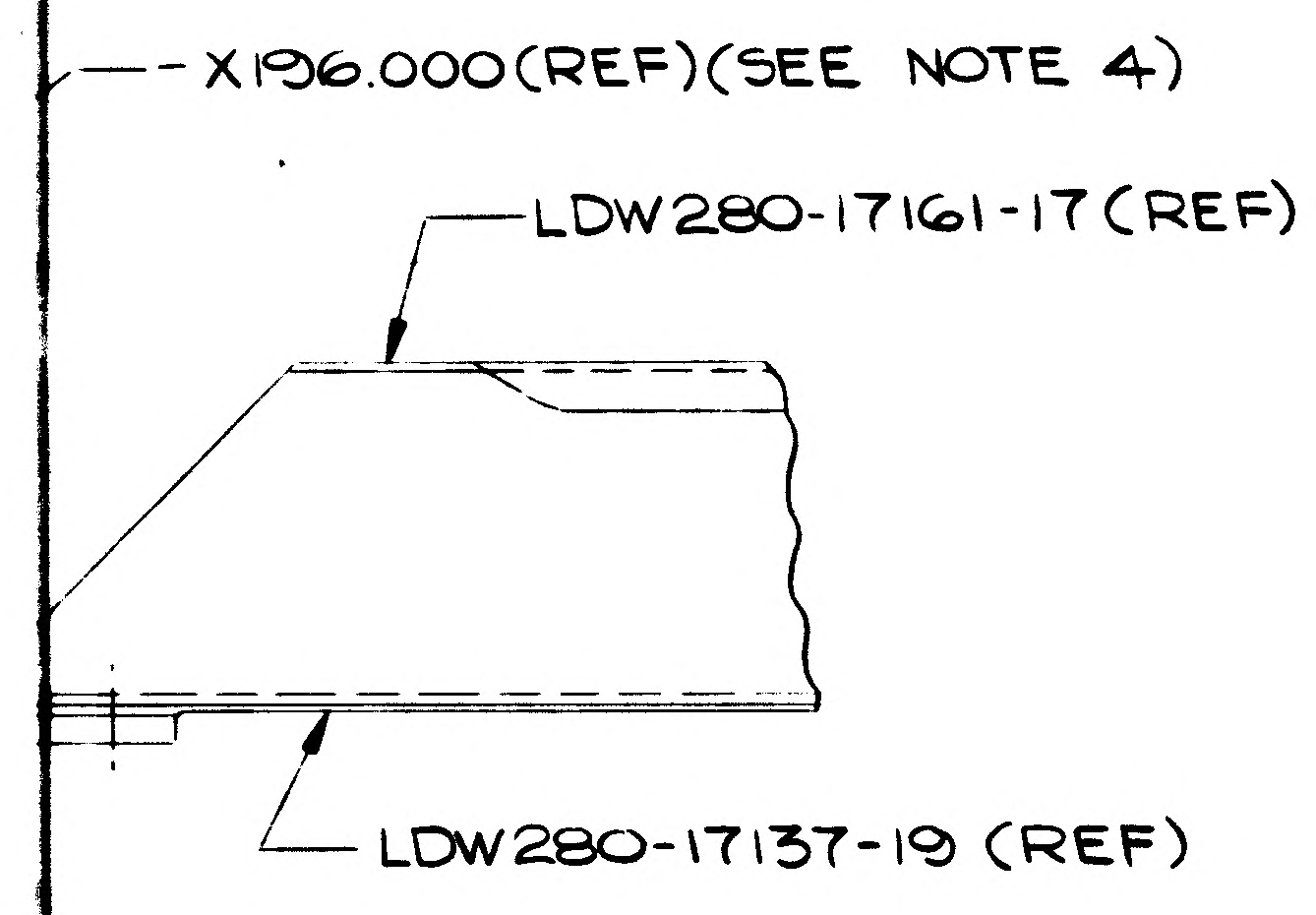
-X196.000(REF)(SEE NOTE 4)
LDW280-17161-17 (REF)
LDW280-17137-19 (REF)

SECT H-H (ZONE 9C SH 3)

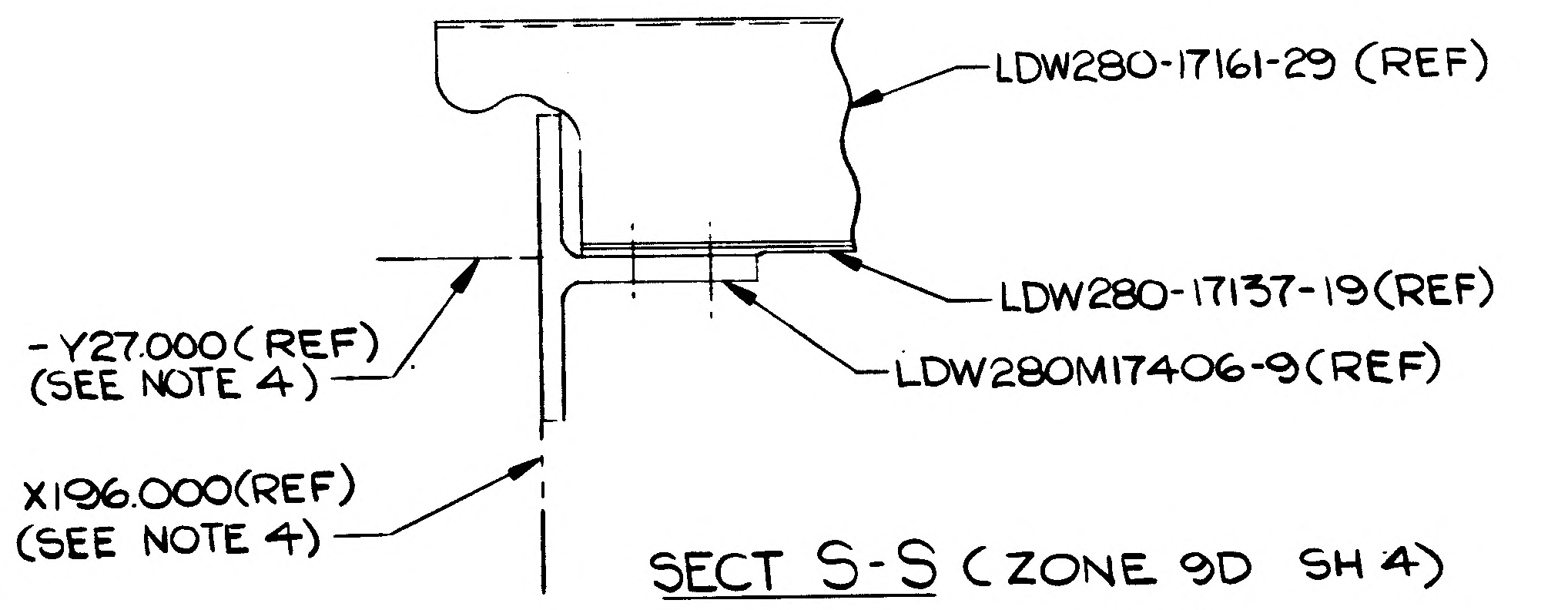
LDW280-17161-29 (REF)
-Y27.000(REF)
(SEE NOTE 4)
LDW280-17137-19(REF)
LDW280M17406-9(REF)
X196.000(REF)
(SEE NOTE 4)

SECT S-S (ZONE 9D SH 4)

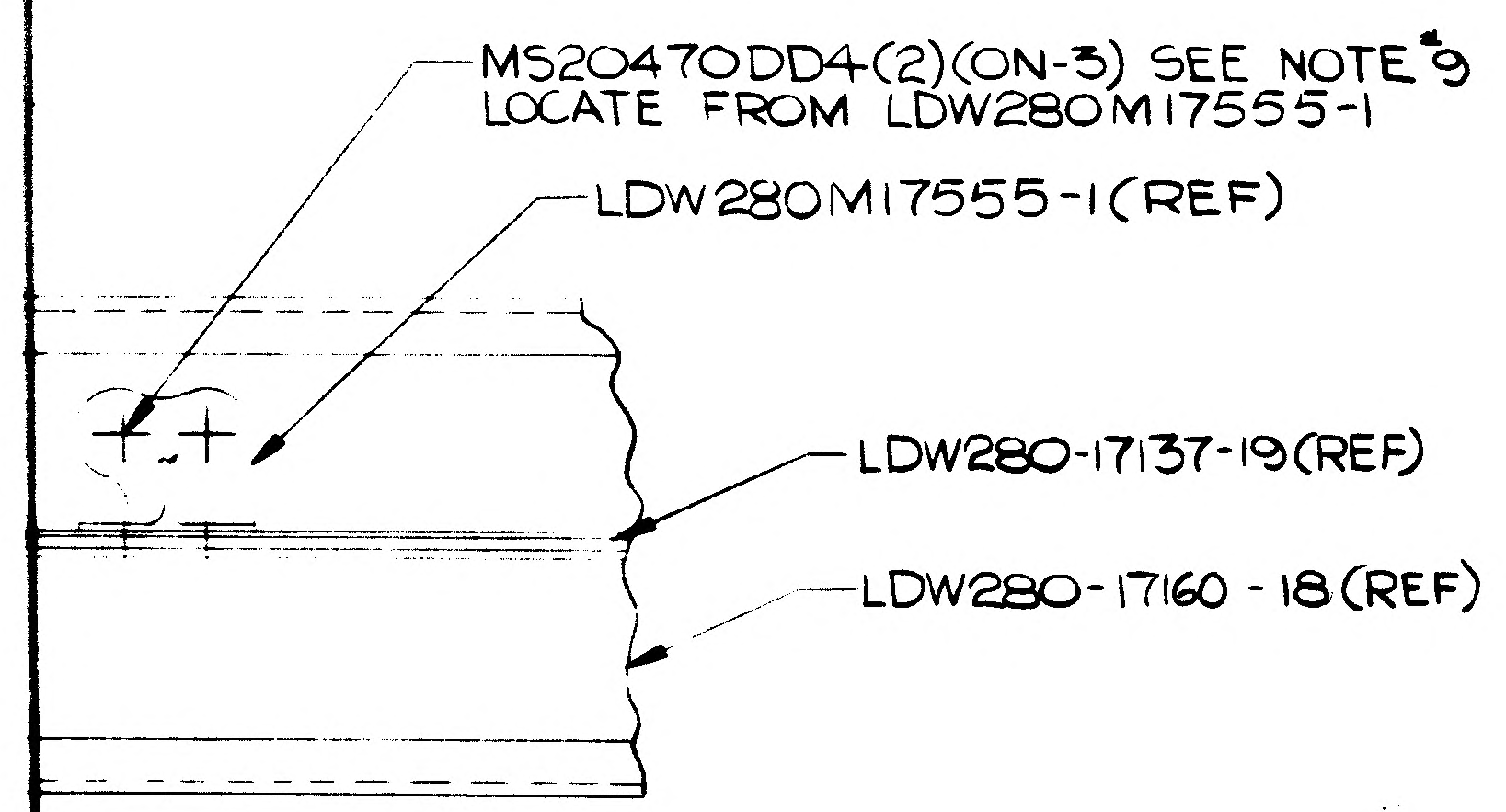
MS20470DD4(2)(ON-3) SEE NOTE 3
LOCATE FROM LDW280M17555-1
LDW280M17555-1(REF)
LDW280-17137-19(REF)
LDW280-17160-18(REF)

SECT D-D (ZONE 7B SH 3)

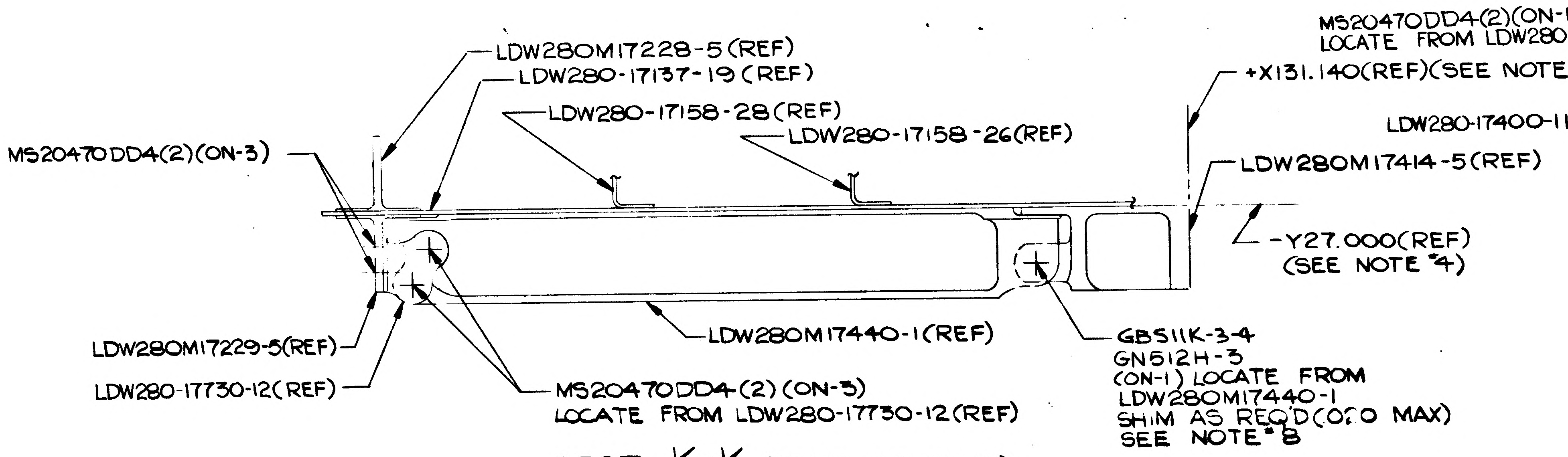
LDW280M17228-5 (REF)
LDW280-17137-19 (REF)
LDW280-17158-28 (REF)
LDW280-17158-26(REF)
MS20470DD4(2)(ON-3)
+X131.140(REF)(SEE NOTE 4)
LDW280M17414-5(REF)
-Y27.000(REF)
(SEE NOTE 4)
LDW280M17229-5(REF)
LDW280-17730-12(REF)
LDW280M17440-1(REF)
MS20470DD4-(2) (ON-3)
LOCATE FROM LDW280-17730-12(REF)
GB511K-3-4
GN512H-3
(ON-1) LOCATE FROM
LDW280M17440-1
SHIM AS REQ'D(.020 MAX)
SEE NOTE 8

SECT K-K (ZONE 4B SH 3)

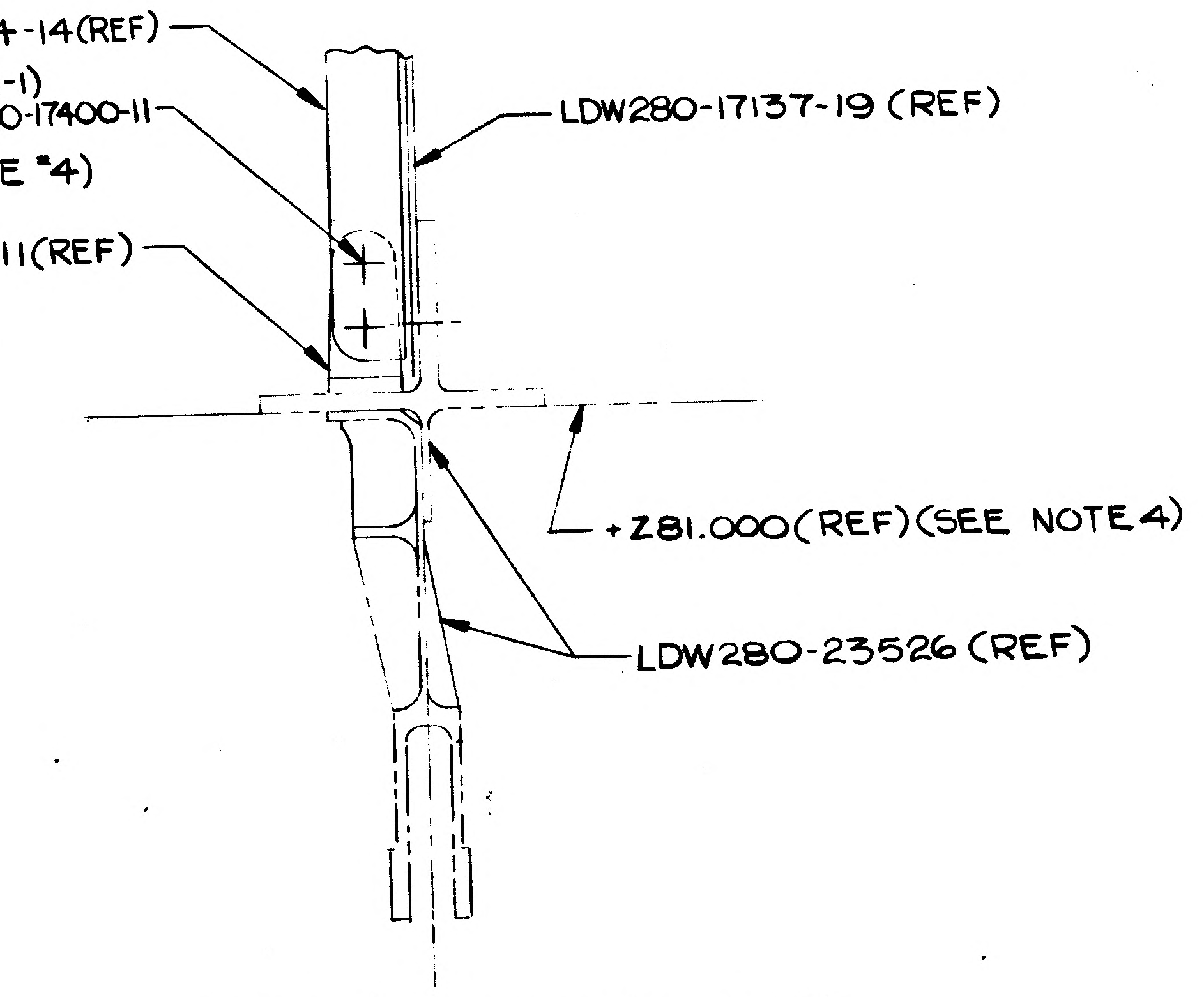
LDW280-17354-14(REF)
MS20470DD4(2)(ON-1)
LOCATE FROM LDW280-17400-11
LDW280-17137-19 (REF)
LDW280-17400-11(REF)
+Z81.000(REF)(SEE NOTE 4)
LDW280-23526 (REF)

SECT J-J (ZONE 5A SH 3)

ODE IDENT NO 26512
LDW280-52537 SH 5

02/03 NAS 9-1100

CODE IDENT NO 26512
LDW280-52537 SH 5

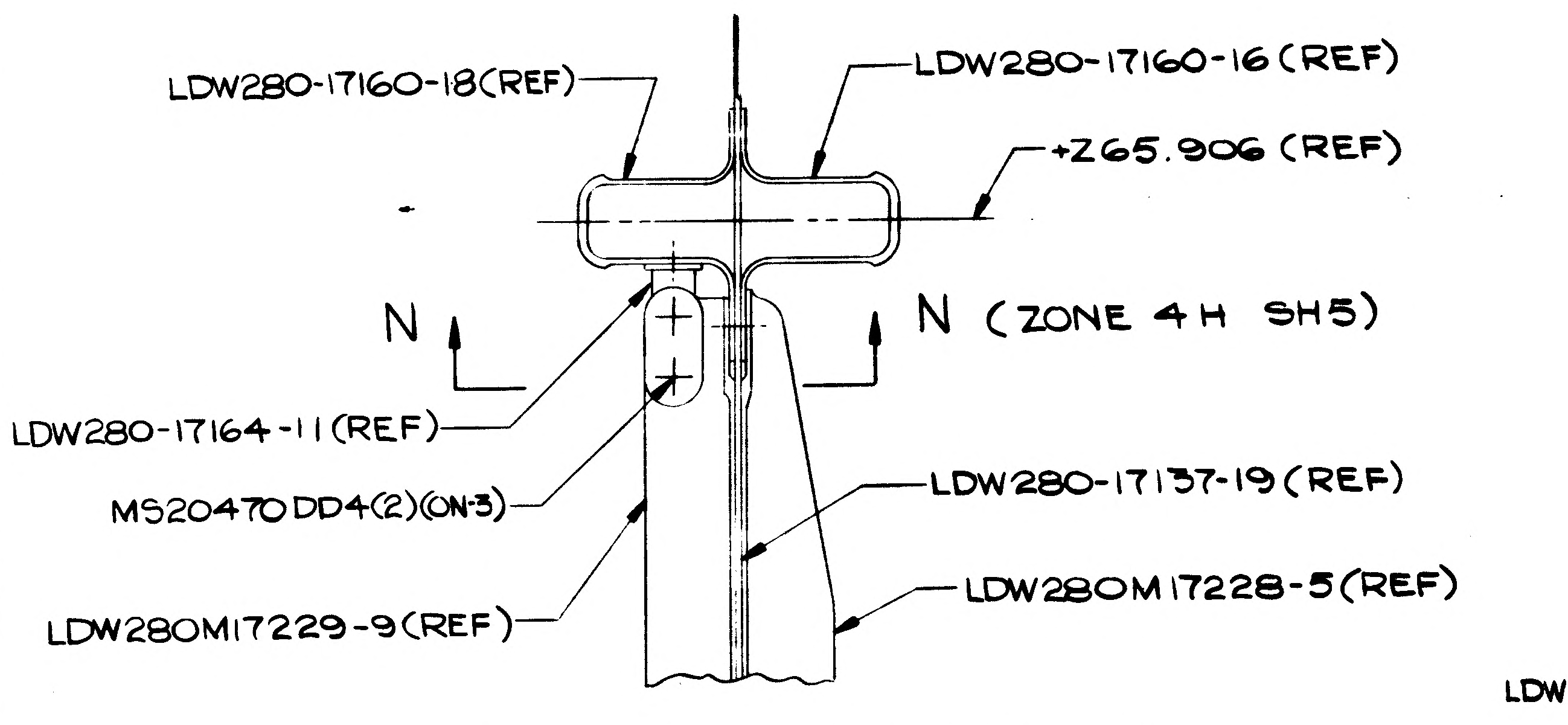
SECT L-L (ZONE 4B SH3)
LDW280-17160-18(REF)
LDW280-17160-16 (REF)
+Z65.906 (REF)
N
N (ZONE 4H SH5)
LDW280-17164-11 (REF)
MS20470DD4(2)(ON-3)
LDW280-17137-19 (REF)
LDW280M17228-5 (REF)
LDW280M17229-9 (REF)

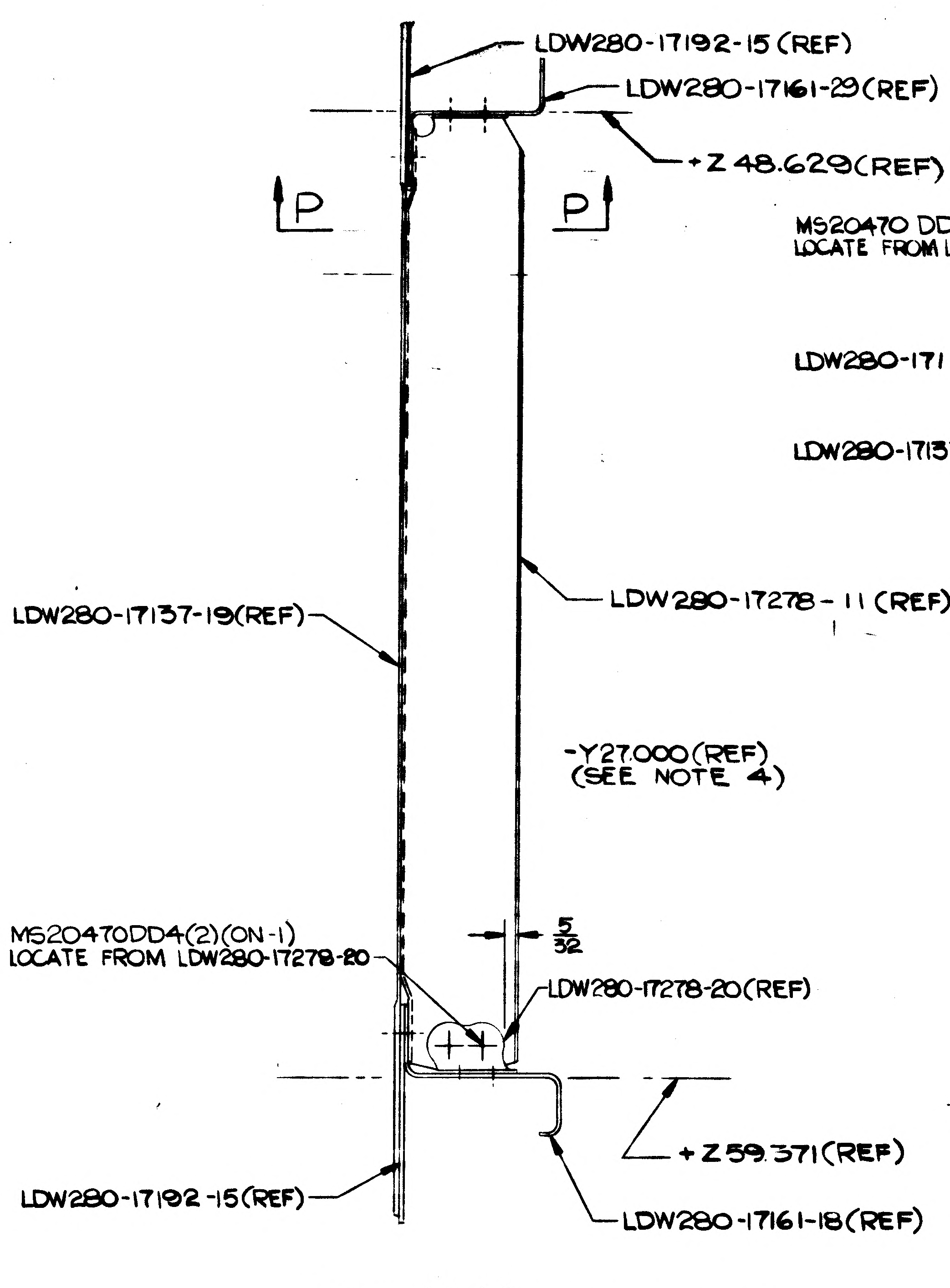
SECT M-M (ZONE 4D SH4)
LDW280-17192-15 (REF)
LDW280-17161-29 (REF)
+Z 48.629 (REF)
P
P
LDW280-17278-11 (REF)
LDW280-17137-19(REF)
-Y27.000 (REF)
(SEE NOTE 4)
MS20470DD4(2)(ON-1)
LOCATE FROM LDW280-17278-20
5/32
LDW280-17278-20(REF)
+Z59.371 (REF)
LDW280-17192-15(REF)
LDW280-17161-18 (REF)

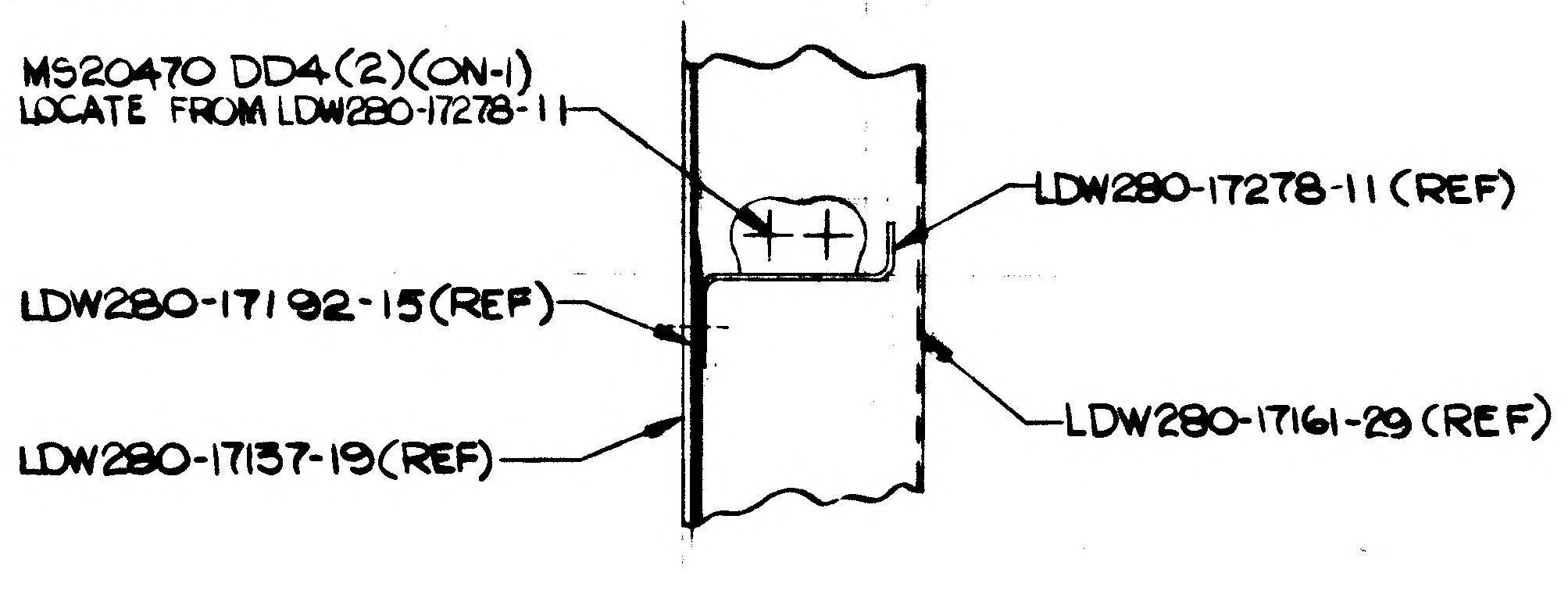
SECT P-P
MS20470 DD4(2)(ON-1)
LOCATE FROM LDW280-17278-11
LDW280-17278-11 (REF)
LDW280-17192-15(REF)
LDW280-17137-19(REF)
LDW280-17161-29 (REF)

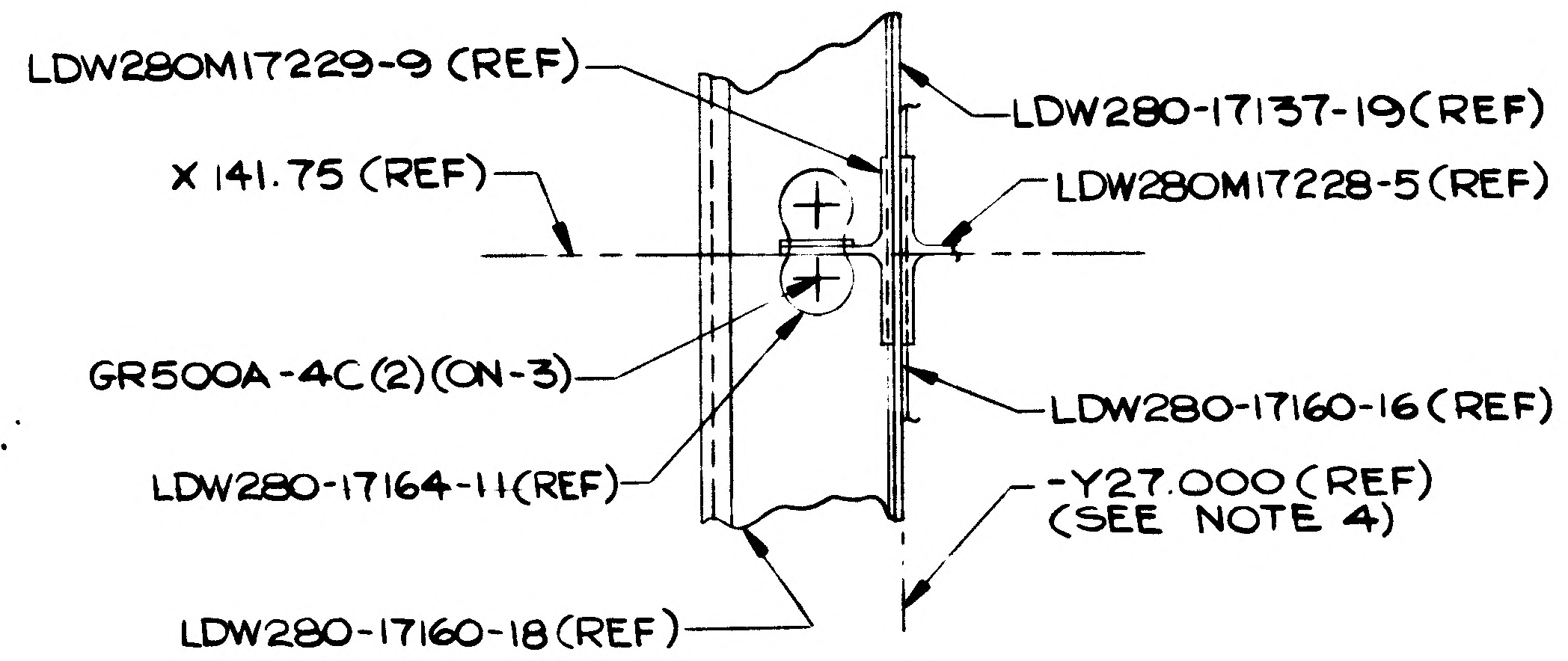
SECT N-N (ZONE 4J SH5)
LDW280M17229-9 (REF)
LDW280-17137-19(REF)
X 141.75 (REF)
LDW280M17228-5 (REF)
GR500A-4C(2)(ON-3)
LDW280-17160-16 (REF)
LDW280-17164-11(REF)
-Y27.000 (REF)
(SEE NOTE 4)
LDW280-17160-18 (REF)

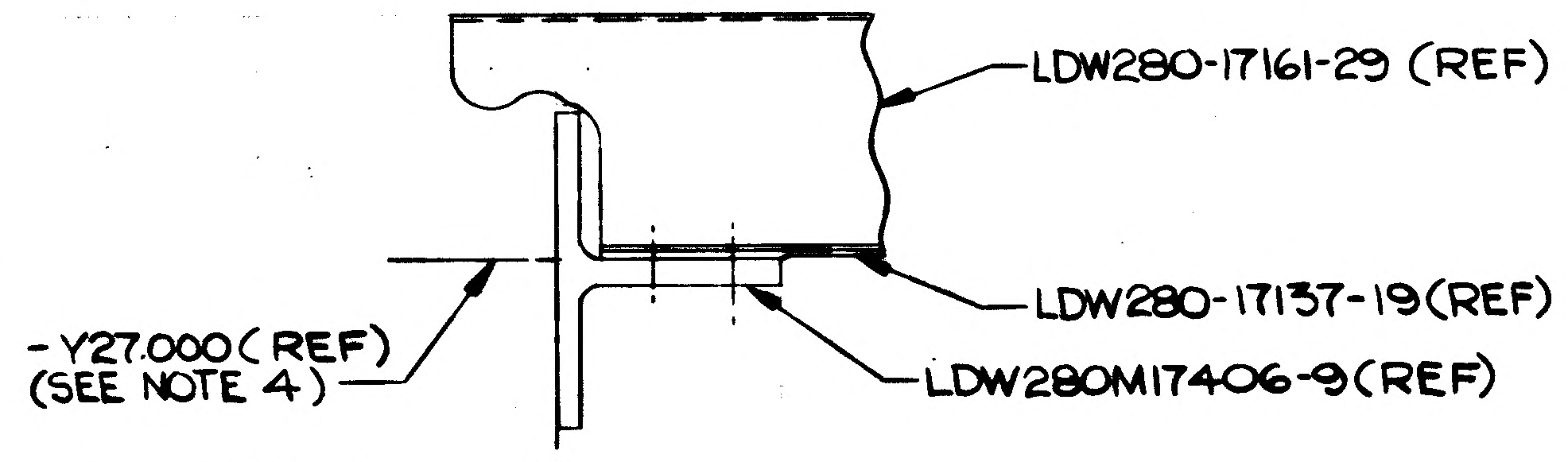
SECT S-S (ZONE 9D SH 4)
LDW280-17161-29 (REF)
LDW280-17137-19(REF)
-Y27.000(REF)
(SEE NOTE 4)
LDW280M17406-9(REF)
X196.000(REF)
(SEE NOTE 4)

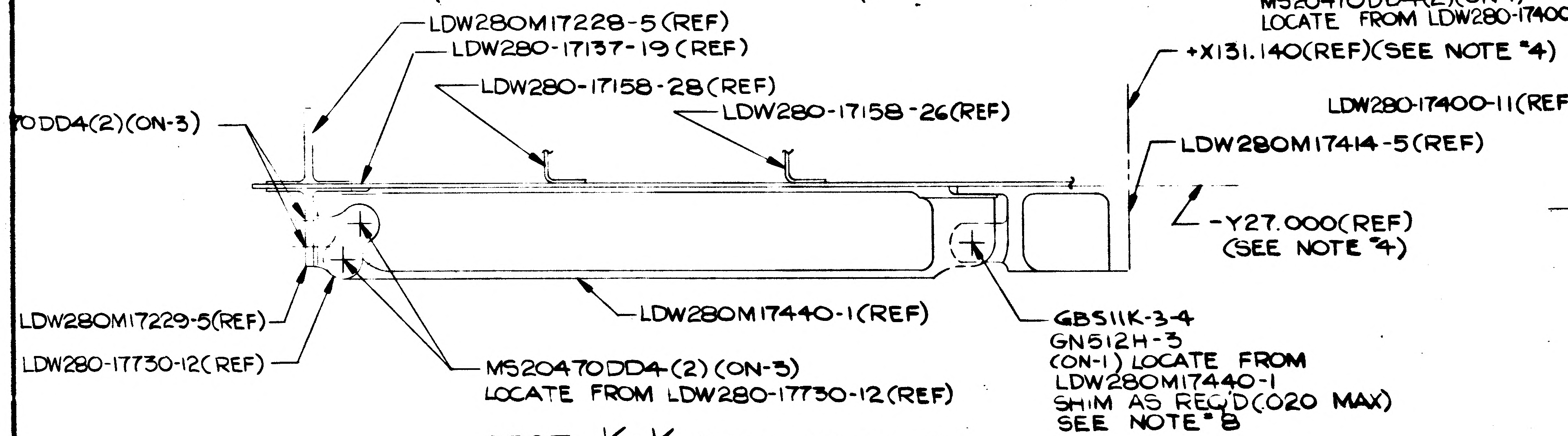
SECT K-K (ZONE 4B SH 3)
LDW280M17228-5 (REF)
LDW280-17137-19 (REF)
LDW280-17158-28(REF)
LDW280-17158-26(REF)
0DD4(2)(ON-3)
+X131.140(REF)(SEE NOTE 4)
LDW280M17414-5(REF)
-Y27.000(REF)
(SEE NOTE 4)
LDW280M17229-5(REF)
LDW280-17730-12(REF)
LDW280M17440-1(REF)
MS20470DD4(2)(ON-3)
LOCATE FROM LDW280-17730-12(REF)
GB511K-3-4
GN512H-3
(ON-1) LOCATE FROM
LDW280M17440-1
SHIM AS REQ'D(.020 MAX)
SEE NOTE 8

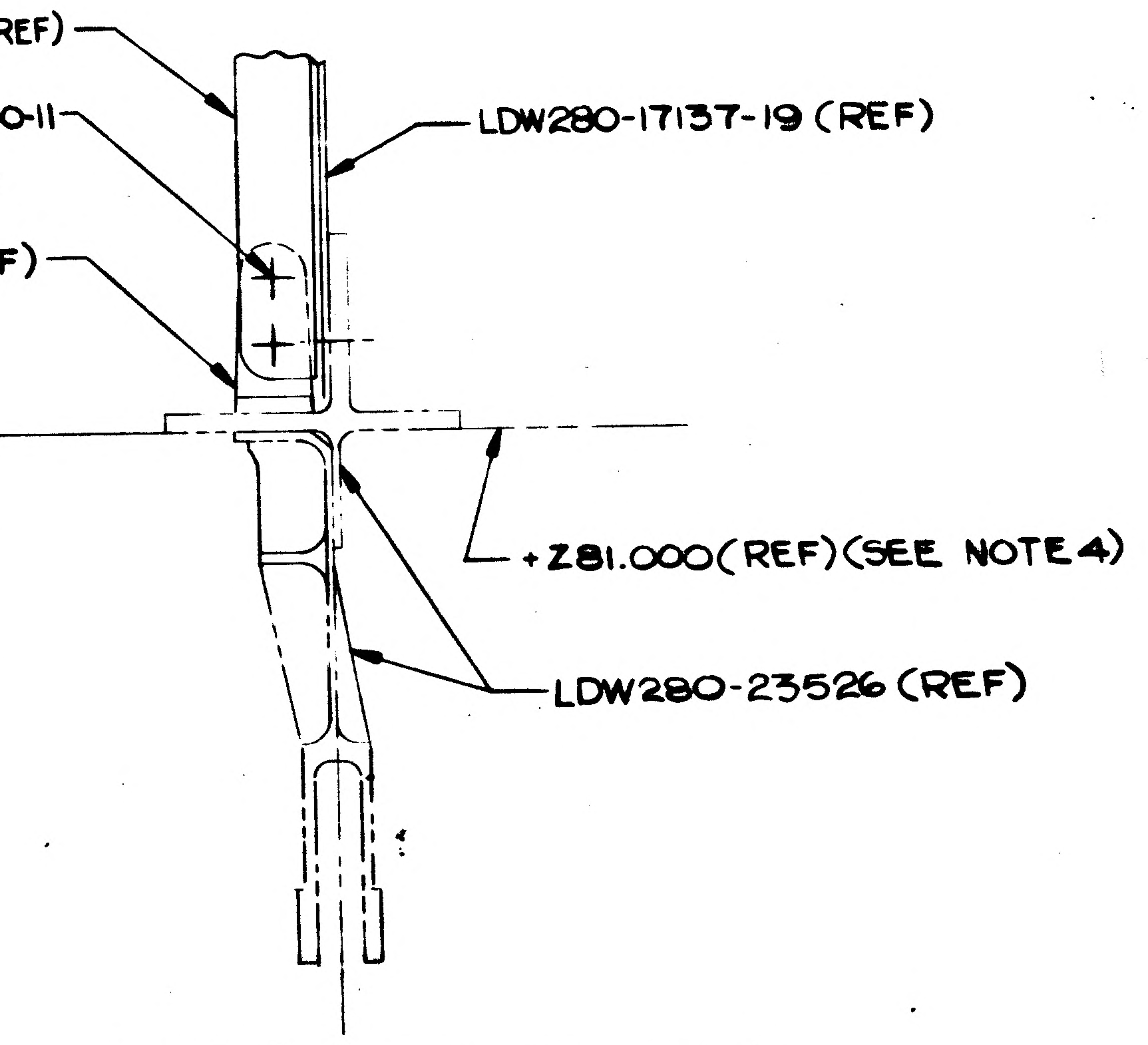
SECT J-J (ZONE 5A SH 3)
LDW280-17354-14(REF)
MS20470DD4(2)(ON-1)
LOCATE FROM LDW280-17400-11
LDW280-17137-19 (REF)
LDW280-17400-11(REF)
+Z81.000(REF)(SEE NOTE 4)
LDW280-23526 (REF)

MANUFACTURING OPERATIONS
UNLESS OTHERWISE SPECIFIED
NOTES CHECKED ✓ APPLY TO THIS DWG.

PART NUMBER AND ALL OTHER MARKINGS IN REGION MARKED ☒ USE BOTH SIDES IF NECESSARY.

FILLET AND INSIDE CORNER RADII TOLERANCES
.016R TO .062R ± .010
.063R TO .250R ± .015
OVER .250R ± .030

DEPTH SHOWN FOR TAPPED HOLES IS FULL THDS. 2-3 IMP THDS. BEYOND PERMISSIBLE.

EXTERNAL THREAD LENGTH SHOWN INCLUDES 2 IMPERFECT THREADS MAX.

DO NOT CADMIUM PLATE & PAINT HOLES OR SURFACES MARKED WITH DOUBLE ASTERISK.

MISMATCH STEP OF ± .005 PERMISSIBLE DUE TO CHANGE OF CUTTERS AT INSIDE INTERSECTING SURFACES.

DIAMETERS MARKED MUST BE CONCENTRIC WITHIN FULL INDICATOR READING

HOLES MUST BE KEPT FREE OF CHROME PLATING SOLUTION.

ALL DIMENSIONS SHOWN TO BE MET AFTER CADMIUM PLATING. THICKNESS OF PLATE .0003 MIN. TO .0005 MAX. MIN. THICKNESS TO BE .0002 ON THREADED AREAS. NO ALLOWANCE FOR PLATING IN HOLES

125 SURFACE ROUGHNESS INCLUDING REAMED HOLES PER MIL-STD-10

200 FOR ALL DRILLED HOLES

REMOVE ALL BURRS. BREAK ALL EDGES .015-.031

INSPECTION INFORMATION MINIMUM PERMISSIBLE AVERAGE EDGE DISTANCE MARKED IS

SYMBOL √ DENOTES SURFACE TO BE MACHINED

UNLESS OTHERWISE SPECIFIED TOLERANCE ON FLANGES IS ± 1/32

LENGTHS OF AN, NAS & MS AL ALY RIVETS SHORTER THAN 1 INCH ARE NOT SPECIFIED.

TOLERANCE ON LOFTED DELINEATIONS IS

DWG SIZE 34 X 94
PRINTING INFO ONLY
FULL SIZE SHEET AREA (36 X 100) = 24.0 SQ. FT.
1/2 SIZE SHEET AREA (1/4 OF FULL) = 6.0 SQ. FT.
PRINT TRIM LINE

LDW280-52537 A

LDW280-52537 A

03/03

NAS 9-1100

CODE IDENT NO 26512
LDW280-52537
SH 5

GRUMMAN AIRCRAFT ENGRG CORP., BETHPAGE, L. I., NEW YORK

MODEL OR END ITEM	SIZE	CODE IDENT NO.		
LEM	J	26512	LDW280-52537	A
	SCALE FULL		SHEET 5	

K2

QTY PER ASSEMBLY					-3	-1	CODE IDENT	PART NO.	I&T	NOMENCLATURE OR DESCRIPTION	MATERIAL	GOVT SPEC	COML SPEC	STOCK SIZE	PROCESS SYM	FINISH NO.	ZONE
						2		LDW280-17608-23	E	PLATE	SEE DWG						
						1		-21									
						1		-19									
						2		LDW280-17608-11									
						1		LDW280-17601-13									9F
						1		LDW280-17601-11									9F
						2		LDW280-17600-15		PLATE							
						1		LDW280-17400-11		TEE							5A
					1			LDW280-17354-14		ANGLE							5A
					1			LDW280-17354-12		ANGLE							9A
						2		LDW280-17341-21		DOUBLER							3C
						1		LDW280-17278-20		CLIP							4C
					1			LDW280-17278-11		ZEE							4D
					2			LDW280-17192-15		DOUBLER							4C
					1			LDW280-17164-11		TEE							4B
					1			LDW280-17162-13		SHIM							9B
					1			LDW280-17162-11		SHIM							9B
					1			LDW280-17161-29		ZEE							8D
					1			LDW280-17161-21		ZEE							8E
					1			LDW280-17161-18		ZEE							6C
					1			LDW280-17160-18		HAT BEAM							8B
					1			LDW280-17160-16	E	HAT BEAM	SEE DWG						8B

SYM OR NO.	PROCESS OR FINISH	GRUMMAN SPEC OR MILITARY SPEC	SYM OR NO.	PROCESS OR FINISH	GRUMMAN SPEC OR MILITARY SPEC	SYM OR NO.	PROCESS OR FINISH	GRUMMAN SPEC OR MILITARY SPEC

I & T: IDENTIFICATION AND TRACEABILITY IN ACCORDANCE WITH : NONE

GRUMMAN AIRCRAFT ENGRG CORP, BETHPAGE, L. I., NEW YORK

SIZE	CODE IDENT NO.	
B	26512	LDW280-52537

SCALE NONE SHEET 2.01

ENG 77.2 7-66

01

NAS 9-1100

QTY PER ASSEMBLY -3	QTY PER ASSEMBLY -1	CODE IDENT	PART NO.	I&T	NOMENCLATURE OR DESCRIPTION	MATERIAL	GOVT SPEC	COML SPEC	STOCK SIZE	PROCESS SYM	FINISH NO.	ZONE
			GR500A-4C	E	RIVET	GRUMMAN STD						
	8		GN512H-5		COLLAR	GRUMMAN STD						
	22		GN512H-4		COLLAR	GRUMMAN STD						
	24		GN512H-3		COLLAR	GRUMMAN STD						
1			LDW280M17555-1		STRUT	SEE DWG						7B
	1		LDW280M17460-1		ANGLE							3F
1			LDW280M17440-1		FITTING							3B
1			LDW280M17414-5		CAPSTRIP							3A
1			LDW280M17406-9		CAPSTRIP							10B
	1		LDW280M17229-9		TEE							4A
	1		LDW280M17228-5		TEE							4A
1			LDW280-17730-12		CLIP							4A
	2		LDW280-17619-11		PLATE							9F
	4		LDW280-17618-13									10A
	2		LDW280-17618-11									10A
	1		LDW280-17609-17									2F
	1		LDW280-17609-15	E	PLATE	SEE DWG						3F

SYM OR NO.	PROCESS OR FINISH	GRUMMAN SPEC OR MILITARY SPEC	SYM OR NO.	PROCESS OR FINISH	GRUMMAN SPEC OR MILITARY SPEC	SYM OR NO.	PROCESS OR FINISH	GRUMMAN SPEC OR MILITARY SPEC

I & T: IDENTIFICATION AND TRACEABILITY IN ACCORDANCE WITH : NONE

GRUMMAN AIRCRAFT ENGRG CORP, BETHPAGE, L. I., NEW YORK

SIZE	CODE IDENT NO.	
B	26512	LDW280-52537

SCALE NONE

SHEET 2.02

ENG 77.2 7-65

01

NAS 9-1100

H.G.

ENG 32.1 REV 3-65

*

GRUMMAN AIRCRAFT ENGINEERING CORP.
CODE IDENT NO. 26512
ENGINEERING ORDER

DWG. NO. LDW280-52537	EO NO. B1
CONTROL INFO NO. LEM-2-2496	

IN FLD & B/M, FOR-3, REMOVE LDW280-17161-29 & REPLACE WITH LDW280-17161-31

2

DETAIL SPEC REQ		CL II ENGRG CHG		CL I ENGRG CHG	

REASON FOR EO	DESCRIPTION OF EO	GAEC EO RELEASE
-29 BENT INCORRECTLY & DOES NOT AGREE WITH NEXT ASSY	IN FLD & B/M, FOR-3, LDW280-17161-31 WAS LDW280-17161-29.	② C VE

MODEL	EFFECTIVITY			DRAWING CHANGE REQD		DISPOSITION OF PARTS	
	PROCURING ACTIVITY NO.	GAEC UNIT NO.	SUB CONTR UNIT NO.	REVISE DWG	RECORD EO	REWORK	SCRAP
LEM		LEM-2(32)		✓		-3	
		LEM-3(33)					

APPROVED BY		SR			caw	caw	RMC(E)	B.
DATE	9/1	10-4			8/1/66	8/1/66	9-15	8-2-66
	YDZ	~~SUPPORT~~	RELIAB. GROUP	GROUP LEADER	STRESS GROUP	LIAISON ENGRG	PROJ ENGRG	~~GOVT~~

PRIORITY	DRAWING TITLE	DRAWING NO.	EO NO.
C2	PANEL INSTALLATION ~ DESCENT STAGE - FWD LH BEAM	LDW280-52537	B1

ISSUED BY LIAISON: J. HAUGH X3604 SECTION V.D.I. GROUP NO. 335 PL 35

01

NAS 9-1100

H.G.

ENG 32.1 REV 3-65

GRUMMAN AIRCRAFT ENGINEERING CORP.
CODE IDENT NO. 26512
ENGINEERING ORDER

*

DWG. NO.	LDW 280-52537	EO NO.	B2
CONTROL INFO NO.	LEM-2-2655		

CANCEL EO B1

IN F/D & B/M, FOR -3 (SH 4.00 ZONE D7) ZONE +Z 48.629 REMOVE CALLOUT OF LDW 280-17161-29(1) AND REPLACE WITH -17(1)

2

DETAIL SPEC REQ	☐	CL II ENGRG CHG	☐	CL I ENGRG CHG	☐

REASON FOR EO	DESCRIPTION OF EO	(E) GAEC C EO RELEASE
E.O. CANCELLED & PARTS CORRECTED TO AGREE WITH DETAIL N/A REQTS	CANCELED EO B1; IN F/D & B/M FOR -3 (ZONE +Z 48.629) LDW 280-17161-17 WAS -29	LE

MODEL	EFFECTIVITY PROCURING ACTIVITY NO.	GAEC UNIT NO.	SUB CONTR UNIT NO.
LEM		LEM-2(32)	
		LEM-3(33)	

DRAWING CHANGE REQD		DISPOSITION OF PARTS		APPROVED BY					CAW	CAW		
✓		✓		DATE	9/15	10/8			8/26/66	8/26/66	83066	8-26-66
REVISE DWG	RECORD EO	REWORK	SCRAP	8-24-66	WJS	~~SUPPORT~~ VDI	RELIAB. GROUP	GROUP LEADER	STRESS GROUP	LIAISON ENGRG	PROJ ENGRG	~~GOVT~~

PRIORITY	DRAWING TITLE	DRAWING NO.	EO NO.
C2	PANEL INSTALLATION - DESCENT STAGE - FWD LH BEAM	LDW 280-52537	B2

ISSUED BY LIAISON J. PICCIOTTI Y1069 SECTION VDI GROUP NO. 335 PL 35

01

NAS 9-1100

HG.
ENG 32.2 10-63

GRUMMAN AIRCRAFT ENGINEERING CORP.
CODE IDENT NO. 26512
ENGINEERING ORDER

DWG. NO. LDW280-52537	EO NO. B3
CONTROL INFO NO. LM-2-2919	

IN-1:
ON-3, ADD 5/16 C'BORE AS SHOWN:

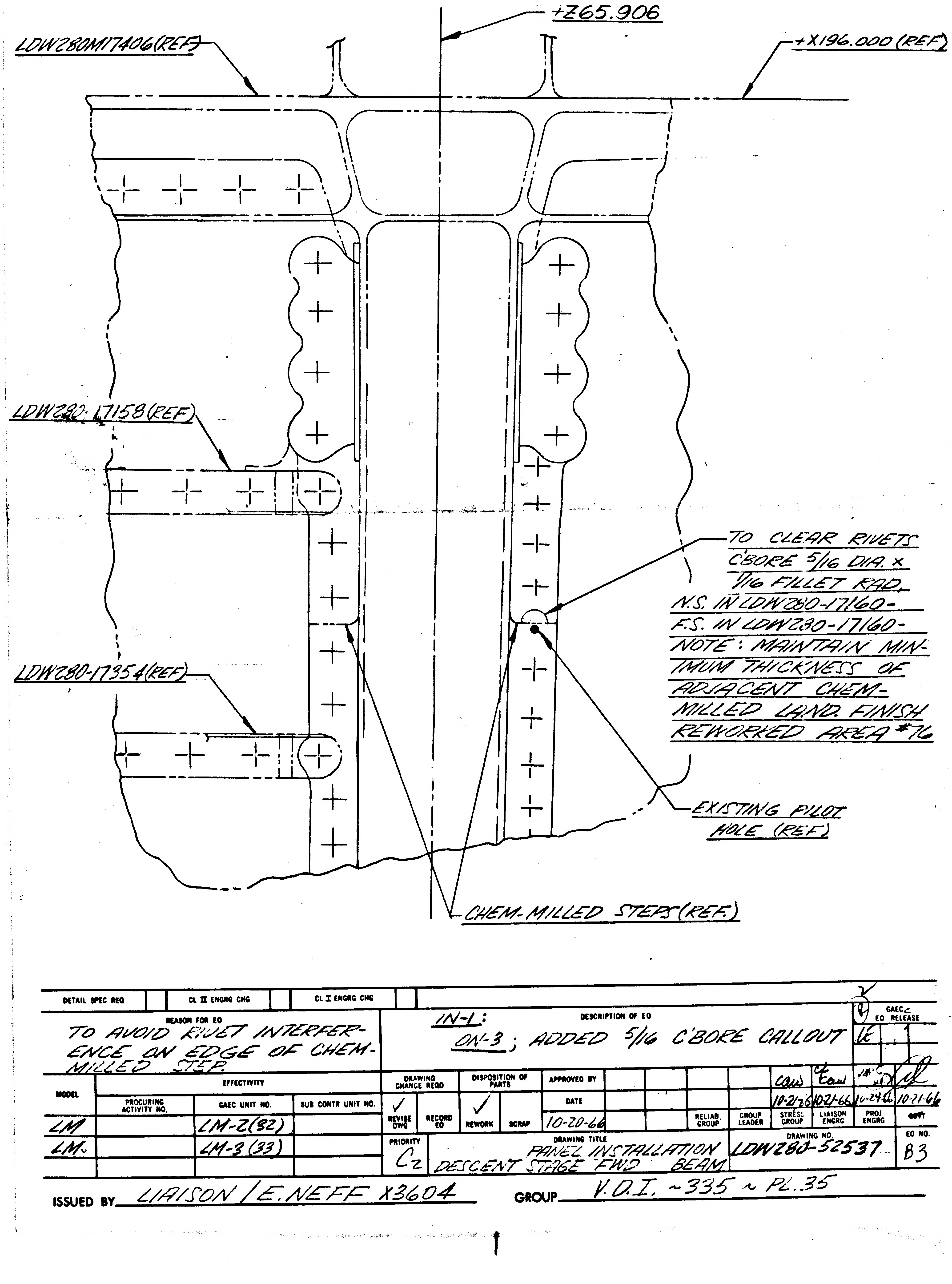
+Z65.906
LDW280M17406(REF)
+X196.000(REF)
LDW280-17158(REF)
LDW280-17354(REF)
EXISTING PILOT HOLE (REF)
CHEM-MILLED STEPS(REF.)

TO CLEAR RIVETS C'BORE 5/16 DIA. x 1/16 FILLET RAD.
N.S. IN LDW280-17160-
F.S. IN LDW280-17160-
NOTE: MAINTAIN MINIMUM THICKNESS OF ADJACENT CHEM-MILLED LAND. FINISH REWORKED AREA #76

DETAIL SPEC REQ		CL II ENGRG CHG		CL I ENGRG CHG	

REASON FOR EO	DESCRIPTION OF EO
TO AVOID RIVET INTERFERENCE ON EDGE OF CHEM-MILLED STEP.	IN-1: ON-3; ADDED 5/16 C'BORE CALLOUT

GAEC EO RELEASE: ✓

MODEL	EFFECTIVITY: PROCURING ACTIVITY NO.	GAEC UNIT NO.	SUB CONTR UNIT NO.
LM		LM-2(82)	
LM		LM-3(33)	

DRAWING CHANGE REQD: REVISE DWG	RECORD EO	DISPOSITION OF PARTS: REWORK	SCRAP
✓		✓	

APPROVED BY			RELIAB. GROUP	GROUP LEADER	STRESS GROUP	LIAISON ENGRG	PROJ ENGRG	GOVT
					CAW	CEW		
DATE								
10-20-66					10-21-66	10-21-66	10-24-66	10-21-66

PRIORITY	DRAWING TITLE	DRAWING NO.	EO NO.
C2	PANEL INSTALLATION DESCENT STAGE FWD BEAM	LDW280-52537	B3

ISSUED BY LIAISON / E. NEFF X3604
GROUP V.O.I. ~335 ~ PL.35

01
NAS 9-1100

ENG 32.1 REV 3-65

GRUMMAN AIRCRAFT ENGINEERING CORP.
CODE IDENT NO. 26512
ENGINEERING ORDER

DWG. NO. LDW280-52537
EO NO. B4
CONTROL INFO NO. LDW280A - 3682

FOR LM-2 & LM-3

IN FIELD & B/M ON LDW280-52537-1 INSTAL LDW280-8202-13

REPLACES LDW280M17673-1

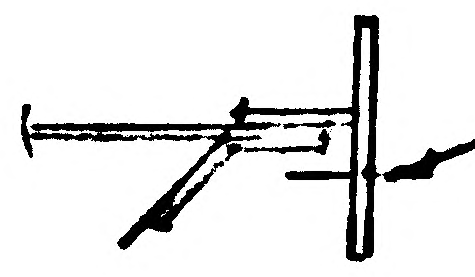

REMOVE MS20470-AD4 (2)

* IN PARTS WITH HOLES ALREADY DRILLED PLUG WITH ALUMINUM RIVETS MS20470-AD4

2

DETAIL SPEC REQ		CL II ENGRG CHG		CL I ENGRG CHG	

REASON FOR EO	DESCRIPTION OF EO	GAEC EO RELEASE
NEW PART REQ'D. FOR DIAGONAL TEE BRACING	ON LDW280-52537-1 ADDED: LDW280-8202-13 REMOVED: LDW280M17673-1 & MS20470-AD4 (2)	12/15

MODEL	EFFECTIVITY		
	PROCURING ACTIVITY NO.	GAEC UNIT NO.	SUB CONTR UNIT NO.
LM		LM-2(32)	
LM		LM-3(33)	

DRAWING CHANGE REQD		DISPOSITION OF PARTS		APPROVED BY	J.H.				NJH		RMc	
✓		✓		DATE	12/11/66				12/14/66		12-14-66	12-15-66
REVISE DWG	RECORD EO	REWORK	SCRAP	1	V.D.I.	SUPPORT	RELIAB. GROUP	GROUP LEADER	STRESS GROUP	LIAISON ENGRG	PROJ ENGRG	GOVT

PRIORITY	DRAWING TITLE	DRAWING NO.	EO NO.
C	PANEL INSTALLATION DESCENT STAGE - FWD L.H. BEAM	LDW280-52537	B4

ISSUED BY R. FLANDERS 11-22-66 X1153
SECTION VEH. DES INT
GROUP NO. 335
PL 35

01
NAS 9-1100

B

ENG 32.2 REV 3-65

*

GRUMMAN AIRCRAFT ENGINEERING CORP.
CODE IDENT NO. 26512
ENGINEERING ORDER

~~DWG.~~ NO. LEO 280
EO NO. 423
CONTROL INFO NO. LM5-11467

IN F/D & B/M : REMOVE LDW280-17400-11 FROM THE FOLLOWING DWGS:

RELEASED BY LIAISON

DWG NO.	* DASH NO.	TITLE	EFF.	CHG. NO
LDW280-28528	-5	-BEAM PANEL	LM 1 (31)	C 7
-52528	-5	D/S R.H. FWD.	LM 2 (32)	B 3
-52528	-7		LM 3 (33)	
-54528	-5		LM 4 (34) THRU 15 (45)	C 1
-25530	-5	BEAM PANEL	LM 1 (31)	C 3
-23530	-5	D/S L.H. FWD.	LM 2 (32) THRU 15 (45)	B 5
-28531	-5	~~BEAM PANEL~~	LM 1 (31)	A 4
-52531	-1	~~D/S R.H. AFT.~~	LM 2 (32), LM 3 (33)	D 1
-54531	-1		LM 4 (34) THRU LM 15 (45)	C 5
-25533	-9	~~BEAM PANEL~~	LM 1 (31)	E 5
-23533	-5	~~D/S L.H. AFT~~	LM 2 (32) LM 3 (33)	C 8
-54533	-1		LM 4 (34) THRU LM 15 (45)	C 3
-25534	-7	~~BEAM PANEL~~	LM 1 (31)	C 6
-23534	-5	~~D/S FWD R.H~~	LM 2 (32) LM 3 (33)	C 5
-54534	-1		LM 4 (34) THRU LM 15 (45)	B 4
-25536	-5	~~BEAM PANEL~~	LM 1 (31)	D 3
-23536	-9	~~D/S AFT. R.H.~~	LM 2 (32)	
-23536	-5		LM 3 (33) THRU LM 15 (45)	B 4
-51537	-1	~~BEAM PANEL~~	LM 1 (31)	B 2
-52537	-1	~~D/S FWD L.H.~~	LM 2 (32) LM 3 (33)	B 5
-54537	-1		LM 4 (34) THRU LM 15 (45)	C 1
-25539	-5	BEAM PANEL	LM 1 (31)	C 5
-23539	-5	D/S AFT L.H.	LM 2 (32) THRU LM 15 (45)	C 3

SHOP NOTE: PLUG HOLES WITH MS20470DD
(DO NOT INCORP ON DWG)

PRE-FEAT
REF LDW280-17400
CONT # 11466

(5)

DETAIL SPEC REQ ☐ CL II ENGRG CHG ☐ CL I ENGRG CHG ☐

REASON FOR EO: ELIMINATION OF LANDING GEAR BUNGEE SUPT. PER LCR 750

DESCRIPTION OF EO: ON * INSTL : REMOVED LDW280-17400-11

GAEC EO RELEASE: E

MODEL	PROCURING ACTIVITY NO.	GAEC UNIT NO.	SUB CONTR UNIT NO.
LM		NOTED	

DRAWING CHANGE REQD: REVISE DWG ✓ RECORD EO
DISPOSITION OF PARTS: REWORK ✓ SCRAP

	APPROVED BY	SUPPORT	RELIAB. GROUP	GROUP LEADER	STRESS GROUP	LIAISON ENGRG	PROJ ENGRG	~~GOVT~~
	WT			~	WPS			
DATE	12/19/66			~	12/19	12-19	12/27	12-19-66
/ /	VDI							

PRIORITY: C
DRAWING TITLE: NOTED
~~DRAWING NO.~~: LEO 280
EO NO. 423

ISSUED BY DON RAGAS X6454 SECTION VDI GROUP NO. 335 PL. 5

ENG 32.1 REV 3-65

B

GRUMMAN AIRCRAFT ENGINEERING CORP.
CODE IDENT NO. 26512
ENGINEERING ORDER *

DWG. NO. LDW280-52537
EO NO. B6
CONTROL INFO NO. LDW280A-7330

FOR -3 REVISE F/D & B/M AS FOLLOWS:

LDW280M17406-9-1 (WAS LDW280M17406-9)

LCO-1588 5

DETAIL SPEC REQ		CL II ENGRG CHG		CL I ENGRG CHG	✓

REASON FOR EO	DESCRIPTION OF EO	GAEC C EO RELEASE
TO FACILITATE BOLT SEPARATION	FOR -3 REVISED F/D & B/M AS FOLLOWS: LDW280M17406-9-1 (WAS LDW280M17406-9)	JK 4/7/7

MODEL	PROCURING ACTIVITY NO.	GAEC UNIT NO.	SUB CONTR UNIT NO.
LM		LM-2(32)	
		LM-3(33)	

DRAWING CHANGE REQD		DISPOSITION OF PARTS	
REVISE DWG	RECORD EO	REWORK	SCRAP
✓		✓	

			SUPPORT	RELIAB GROUP	GROUP LEADER	STRESS GROUP	LIAISON ENGRG	PROJ ENGRG	~~GOVT~~
APPROVED BY									
DATE	6/1/67				6/1/67	6/2/67		6/5/67	6/9/67
	5	VDI							

PRIORITY	DRAWING TITLE	DRAWING NO.	EO NO.
C	PANEL INSTALLATION - D.S. - FWD L.H. BEAM	LDW280-52537	B6

ISSUED BY E. FRANK / J. STRAKOSCH X1153 SECTION VDI GROUP NO. 335 PL 25

01

NAS 9-1100

LDW280-52541 B

MODEL OR END ITEM	NEXT ASSY	MODULE OR SER NO.	REQD PER MODULE OR END ITEM
PART NO.		GAEC SCH NO.	

MODEL OR END ITEM	NEXT ASSY	MODULE OR SER NO.	REQD PER MODULE OR END ITEM
PART NO.		GAEC SCH NO.	

MODEL OR END ITEM	NEXT ASSY	MODULE OR SER NO.	REQD PER MODULE OR END ITEM
LEM	LDW280-53509	LEM-3(33)	1
LEM	LDW280-52509	LEM-2(32)	1
PART NO. LDW 280-52541-1		GAEC SCH NO. 51-2	

✓

SH REV STATUS: FOR DESCRIPTION OF REV SEE SUBQ SH

SHEET	1.00	1.10	200	201	2.02	2.03	3.00	4.00	
REV	B	B	B	B	B	B	B	B	
SHEET									
REV									
SHEET									
REV									

LAST SECT LTR USED	J-J	GRUMMAN REL INFO B	
LAST DASH NO. USED	-3	PRIM NO. 207	LE(001) MP-14 8-21-6

UNLESS OTHERWISE SPECIFIED DIMENSIONS ARE IN INCHES.
TOLERANCE UNLESS SPECIFIED
FRACTIONS - DECIMALS - ANGLES
±1/16 ±.020 ±1/2°
ORIG DWG AUTH
DETAIL SPEC REQUIREMENT
CLASS II ENGRG CHANGE
CLASS I ENGRG CHANGE

CONTRACT NO. NAS 9-1100
LINE ITEM *1
DOCUMENTATION TYPE II

DRAWN BY	J.Gardella 5-2-66		
LAYOUT BY	G.Hansmann 6/14/66		
CHECKED BY	D.FASS 6-10-66		
GR LEADER	6/14		
VEH. DES. INT	6/10		
STRUCTURES	6/21	PROJ ENGR	23 Jun 66
STRUCTURES	Hillerman 6/21	REL GROUP	7/14/66
WEIGHTS	6/22		

GRUMMAN AIRCRAFT ENGRG CORP
BETHPAGE, L. I., NEW YORK

DECK INSTALLATION
DESCENT STAGE - R.H. LOWER

SIZE	CODE IDENT NO.		
B	26512	LDW280-52541	B
SCALE NONE		SHEET 1.00 OF 8	

ENG 77.1 12-65

01

NAS 9-1100

REVISIONS

CHANGE LTR	ITEM NO.	SHEET NO.	ZONE	GRUMMAN INFO ONLY	DET SPEC	CLASS I	CLASS II	ENGRG ORDER	DESCRIPTION	EFFECTIVITY	DISPOSITION OF EXISTING PARTS REWORK	DISPOSITION OF EXISTING PARTS SCRAP	CHANGED BY AND DATE	ENGRG APPD	[illegible] APPD
A	1	1.10,1.00					✓		ADDED SH 1.10 ; SH 1 OF 8 WAS 1 OF 7. IN M/B -1 EFF LEM-3(33), N/A LDW280-53509 WAS LDW280-52509	LEM-3	NONE	NONE	OCONNOR 6-27-66		
B	1	1.00,1.10, 4.00	3E 9E					EO B1	CHANGED MS20470DD5 TO NAS1097DD5 RIVETS. ADDED REF PICTURE OF LDW280-23722. CHANGED NO. REQD OF MS20470DD5 FROM (10) & (6) TO (9) & (5) RESPECTIVELY.	LM-2, LM-3	✓		F. ARMANO P. CARTSELOS 11-6-66		
	2	1.10,2.00, 3&4	8A				✓	EO B2	IN FIELD & B/M ON-3, LDW280-17140-15 WAS LDW280-17140-13		✓				
	3	1.10,2.02 2.03,4	7F 4F				✓	EO B3	ON-1 ADDED LDW280-18067-15(1),-17(1), LDW280-18066-11(1), LDW280-18089-11(1) & -13(1), GB511K-08-5 (4), GN512H-08 (4), & MS20470DD5(3). REMOVED LDW280M17580(1), HL10V5-5(2), HL10V5-4(2) & HL70-5 (4).						
	4	1.10,2.01, 3.00	8C					EO B4	ON-1 REMOVED MS20470DD4 (14) FROM FIELD & B/M. REMOVED LDW280M17331-1 ADDED LDW280M17331-3						
	5	1.10,2.03 3&4						(P)	CHANGED COML HARDWARE TO GAEC VENDOR APPROVED EQUIVALENT. ADDED NOTE 9.	NOTED	NOT	REQD	F.H.		

FOR CONTINUATION OF REVISIONS SEE SHEET ________

ENG 77.3 5-65

GRUMMAN AIRCRAFT ENGRG CORP, BETHPAGE, L. I., NEW YORK			
SIZE B	CODE IDENT NO. 26512	LDW280-52541	B
SCALE NONE			SHEET 1.10

01

NAS 9-1100

QTY PER ASSEMBLY -3	QTY PER ASSEMBLY -1	CODE IDENT	PART NO.	I&T	NOMENCLATURE OR DESCRIPTION	MATERIAL	GOVT SPEC	COML SPEC	STOCK SIZE	PROCESS SYM	FINISH NO.	ZONE
1			LDW280-17242-14	E	ANGLE	SEE DWG						4F
1			LDW280-17242-13		ANGLE							8F
1			LDW280-17242-12		ANGLE							4A
1			LDW280-17241-20		ANGLE							5F
1			-19									6F
1			-18									5F
1			-17									7F
1			-16									4E
1			-15									8E
1			-14									4E
1			LDW280-17241-13		ANGLE							8E
1			LDW280-17240-17		ANGLE							4A
1			-16									4C
1			-14									4B
1			-12									5A
1			LDW280-17240-11		ANGLE							6A
2			LDW280-17239-17		TEE							4C
1			LDW280-17239-13		TEE							6F
1			LDW280-17238-17		RING							5B
1			LDW280-17140-15		WEB	SEE DWG						8A
	1		LDW280-52541-3		DECK ASSEMBLY					NONE	NONE	6A
			LDW280-52541-1	E	DECK INSTALLATION					NONE	NONE	6A

SYM OR NO.	PROCESS OR FINISH	GRUMMAN SPEC OR MILITARY SPEC	SYM OR NO.	PROCESS OR FINISH	GRUMMAN SPEC OR MILITARY SPEC	SYM OR NO.	PROCESS OR FINISH	GRUMMAN SPEC OR MILITARY SPEC

I & T: IDENTIFICATION AND TRACEABILITY IN ACCORDANCE WITH :
NONE

GRUMMAN AIRCRAFT ENGRG CORP, BETHPAGE, L. I., NEW YORK

SIZE	CODE IDENT NO.		
B	26512	LDW280-52541	B

SCALE NONE
SHEET 200

ENG 77.2 7-66

01

NAS 9-1100

QTY PER ASSEMBLY							CODE IDENT	PART NO.	I&T	NOMENCLATURE OR DESCRIPTION	MATERIAL	GOVT SPEC	COML SPEC	STOCK SIZE	PROCESS SYM	FINISH NO.	ZONE
					-3	-1											
						1		LDW280M17501-1	E	FITTING	SEE DWG						8A
								LDW280M17443-1									3D
					1			LDW280M17332-1									8D
					1			LDW280M17331-3									8C
					1			LDW280M17289-1		FITTING							4D
					1			LDW280-17948-11		ANGLE							4B
						2		LDW280-17906-13		PLATE							9D
					1			LDW280-17746-17		ANGLE							7A
					1			-15									7B
						1		-13									8B
						1		LDW280-17746-11		ANGLE							8A
						2		LDW280-17419 -17		BRACKET							6F
						1		-14									5F
						1		-13									6F
						1		-12									5F
						1		LDW280-17419-11		BRACKET							6F
					1			LDW280-17243-18		ANGLE							4F
					1			LDW280-17243-17		ANGLE							8F
					1			LDW280-17243-15	E	ANGLE	SEE DWG						8B

SYM OR NO.	PROCESS OR FINISH	GRUMMAN SPEC OR MILITARY SPEC	SYM OR NO.	PROCESS OR FINISH	GRUMMAN SPEC OR MILITARY SPEC	SYM OR NO.	PROCESS OR FINISH	GRUMMAN SPEC OR MILITARY SPEC

I&T: IDENTIFICATION AND TRACEABILITY IN ACCORDANCE WITH : NONE

GRUMMAN AIRCRAFT ENGRG CORP, BETHPAGE, L. I., NEW YORK

SIZE	CODE IDENT NO.		
B	26512	LDW280-52541	B

SCALE NONE
SHEET 2.01

ENG 77.2 7-65

01

NAS 9-1100

QTY PER ASSEMBLY -3	QTY PER ASSEMBLY -1	CODE IDENT	PART NO.	I&T	NOMENCLATURE OR DESCRIPTION	MATERIAL	GOVT SPEC	COML SPEC	STOCK SIZE	PROCESS SYM	FINISH NO.	ZONE
	2		GR500A-4H	E	RIVET BLIND	GRUMMAN STD						
	2		GR500A-4G									
	5		GR500A-4F									
	9		GR500A-4E									
	8		GR500A-4D									
	113		GR500A-4C		RIVET BLIND							
	2		GF510A-6-7		FASTENER							
	3		GF510A-6-6									
	6		GF510A-5-5									
	2		GF510A-5-4		FASTENER							
	1		LDW280-18089-13		PLATE							4F
	1		LDW280-18089-11		PLATE							4F
1			G120-090-10-4A		SHIM							
5			G120-040-10-4A		SHIM							
2			G120-040-4-10A		SHIM	GRUMMAN STD						
	1		LDW280-18067-17		CLIP	SEE DWG						7F
	1		LDW280-18067-15		CLIP							7F
	1		LDW280-18066-11		TEE							7F
	1		LDW280M17578-1		FITTING	SEE DWG						9E
			L									
	1		LDW280M17577-1									3E
	1		LDW280M17546-1									6A
	1		LDW280M17502-1	E	FITTING	SEE DWG						4F

SYM OR NO.	PROCESS OR FINISH	GRUMMAN SPEC OR MILITARY SPEC	SYM OR NO.	PROCESS OR FINISH	GRUMMAN SPEC OR MILITARY SPEC	SYM OR NO.	PROCESS OR FINISH	GRUMMAN SPEC OR MILITARY SPEC

I & T: IDENTIFICATION AND TRACEABILITY IN ACCORDANCE WITH : NONE

GRUMMAN AIRCRAFT ENGRG CORP, BETHPAGE, L. I., NEW YORK

SIZE	CODE IDENT NO.		
B	26512	LDW280-52541	B
SCALE NONE		SHEET 2.02	

ENG 77.2 7-65

01 NAS 9-1100

QTY PER ASSEMBLY							CODE IDENT	PART NO.	I&T	NOMENCLATURE OR DESCRIPTION	MATERIAL	GOVT SPEC	COML SPEC	STOCK SIZE	PROCESS SYM	FINISH NO.	ZONE
					-3	-1											
						53		GN512H-08	E	COLLAR	GRUMMAN STD						
						12		GB511K-08-5		BOLT							
						15		GB511K-08-4		BOLT							
						26		GB511K-08-3		BOLT	GRUMMAN STD						
					4			NAS697A08		NUT PLATE	STD PART						
						2		NAS 697-C4		NUT PLATE							
						2		NAS 674-V4		BOLT							
								NAS1097DD5		RIVET							
								NAS1097AD5		RIVET							
								NAS1097AD3		RIVET							
								MS20470DD5		RIVET							
								MS20470DD4		RIVET							
								MS20426AD3		RIVET							
						2		AN960D416L		WASHER, FLAT	STD PART						
						4		GR500A-5K		RIVET-BLIND	GRUMMAN STD						
						4		GR500A-5J									
						4		GR500A-5H									
						55		GR500A-5G									
						17		GR500A-5F									
						2		GR500A-5E									
						34		GR500A-5D	E	RIVET - BLIND	GRUMMAN STD						

SYM OR NO.	PROCESS OR FINISH	GRUMMAN SPEC OR MILITARY SPEC	SYM OR NO.	PROCESS OR FINISH	GRUMMAN SPEC OR MILITARY SPEC	SYM OR NO.	PROCESS OR FINISH	GRUMMAN SPEC OR MILITARY SPEC

I & T: IDENTIFICATION AND TRACEABILITY IN ACCORDANCE WITH : NONE

GRUMMAN AIRCRAFT ENGRG CORP, BETHPAGE, L. I., NEW YORK

SIZE	CODE IDENT NO.		
B	26512	LDW280-52541	B
SCALE NONE			SHEET 2.03

ENG 77.2 7-65

01 NAS 9-1100

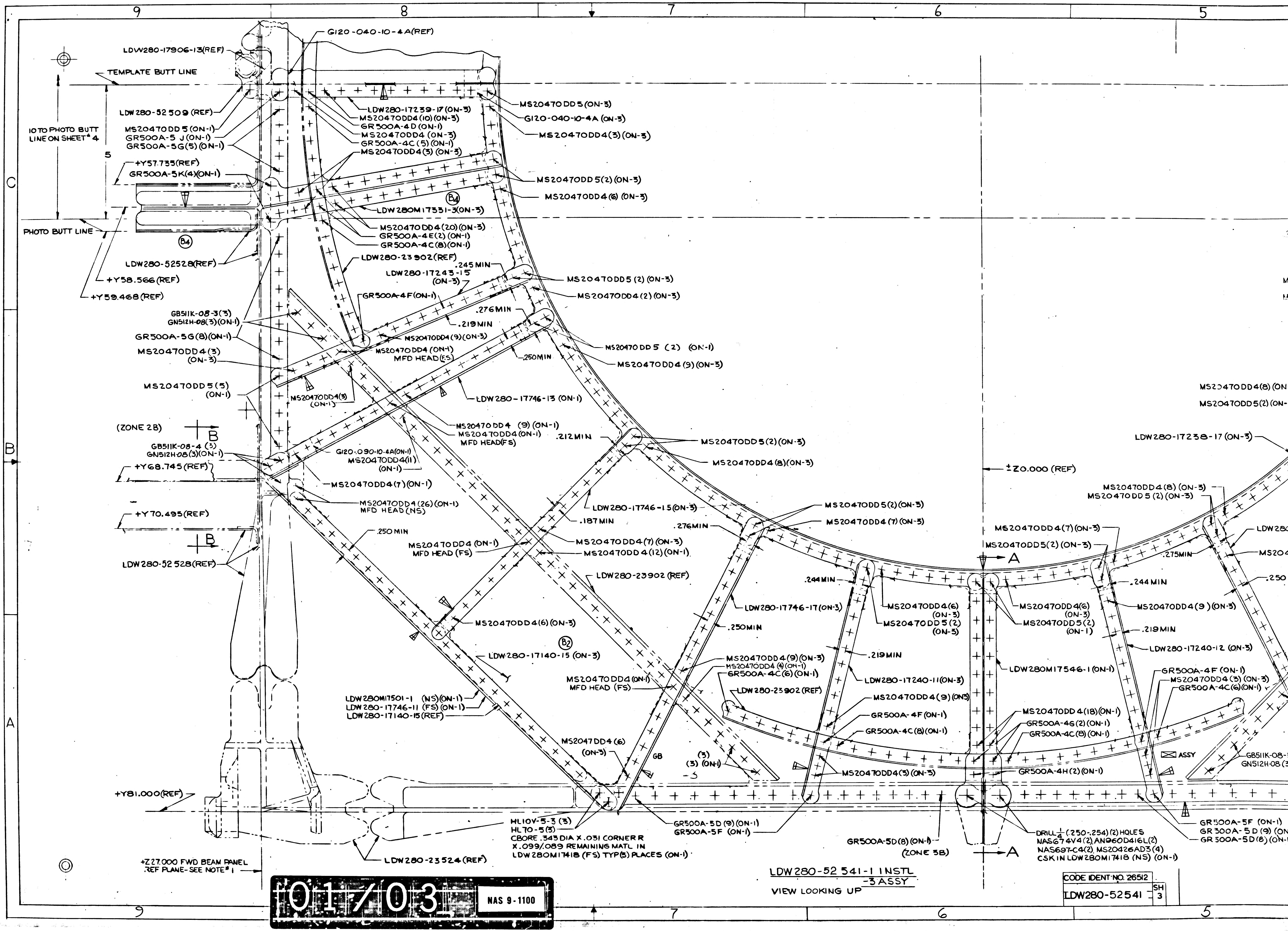
9
8
7
6
5
C
B
A
G120-040-10-4A(REF)
LDW280-17906-13(REF)
TEMPLATE BUTT LINE
LDW280-52509 (REF)
10 TO PHOTO BUTT LINE ON SHEET # 4
5
MS20470DD5(ON-1)
GR500A-5 J(ON-1)
GR500A-5G(5)(ON-1)
+Y57.735(REF)
GR500A-5K(4)(ON-1)
PHOTO BUTT LINE
B4
LDW280-52528(REF)
+Y58.566(REF)
+Y59.468(REF)
LDW280-17239-17(ON-3)
MS20470DD4(10)(ON-3)
GR500A-4D(ON-1)
MS20470DD4(ON-3)
GR500A-4C(5)(ON-1)
MS20470DD4(3)(ON-3)
MS20470DD5(ON-3)
G120-040-10-4A(ON-3)
MS20470DD4(3)(ON-3)
MS20470DD5(2)(ON-3)
MS20470DD4(6)(ON-3)
LDW280M17331-3(ON-3)
MS20470DD4(20)(ON-3)
GR500A-4E(2)(ON-1)
GR500A-4C(8)(ON-1)
LDW280-23902(REF)
LDW280-17243-15 (ON-3)
.245 MIN
MS20470DD5(2)(ON-3)
MS20470DD4(2)(ON-3)
GR500A-4F(ON-1)
.276MIN
.219MIN
GB511K-08-3(3)
GN512H-08(3)(ON-1)
GR500A-5G(8)(ON-1)
MS20470DD4(9)(ON-3)
MS20470DD4(ON-1) MFD HEAD(FS)
.250MIN
MS20470DD5 (2) (ON-1)
MS20470DD4(9)(ON-3)
MS20470DD4(3) (ON-3)
MS20470DD5(5) (ON-1)
MS20470DD4(3) (ON-1)
LDW280-17746-13 (ON-1)
(ZONE 2B)
B
GB511K-08-4 (3)
GN512H-08(3)(ON-1)
+Y68.745(REF)
G120-090-10-4A(ON-1)
MS20470DD4(11) (ON-1)
MS20470DD4 (9) (ON-1)
MS20470DD4(ON-1) MFD HEAD(FS)
.212MIN
MS20470DD5(2)(ON-3)
MS20470DD4(8)(ON-3)
MS20470DD4(7)(ON-1)
MS20470DD4(26)(ON-1) MFD HEAD(NS)
+Y70.495(REF)
B
LDW280-52528(REF)
.250MIN
LDW280-17746-15(ON-3)
.187MIN
MS20470DD4(ON-1) MFD HEAD (FS)
MS20470DD4(7)(ON-3)
MS20470DD4(12)(ON-1)
LDW280-23902 (REF)
.276MIN
MS20470DD5(2)(ON-3)
MS20470DD4(7)(ON-3)
±Z0.000 (REF)
MS20470DD4(6)(ON-3)
B2
LDW280-17140-15 (ON-3)
LDW280M17501-1 (NS)(ON-1)
LDW280-17746-11 (FS)(ON-1)
LDW280-17140-15(REF)
MS2047DD4(6) (ON-3)
GB
(3) (3) (ON-1)
-3
.250MIN
LDW280-17746-17(ON-3)
.244MIN
MS20470DD4(6) (ON-3)
MS20470DD5(2) (ON-3)
MS20470DD4(9)(ON-3)
MS20470DD4(4)(ON-1)
GR500A-4C(6)(ON-1)
MS20470DD4(ON-1) MFD HEAD (FS)
LDW280-23902(REF)
.219MIN
LDW280-17240-11(ON-3)
MS20470DD4(9)(ON-3)
GR500A-4F(ON-1)
GR500A-4C(8)(ON-1)
MS20470DD4(3)(ON-3)
MS20470DD4(7)(ON-3)
MS20470DD5(2)(ON-3)
A
MS20470DD4(6) (ON-3)
MS20470DD5(2) (ON-1)
LDW280M17546-1(ON-1)
MS20470DD4(18)(ON-1)
GR500A-4G(2)(ON-1)
GR500A-4C(8)(ON-1)
GR500A-4H(2)(ON-1)
MS20470DD4(8)(ON-3)
MS20470DD5(2)(ON-3)
.275MIN
.244MIN
MS20470DD4(9)(ON-3)
.219MIN
LDW280-17240-12 (ON-3)
GR500A-4F (ON-1)
MS20470DD4(3)(ON-3)
GR500A-4C(6)(ON-1)
ASSY
LDW280-17238-17(ON-3)
MS20470DD4(8)(ON
MS20470DD5(2)(ON-
+Y81.000(REF)
HL10V-5-3 (3)
HL70-5(3)
CBORE .343 DIA X .031 CORNER R X .099/.089 REMAINING MATL IN LDW280M17418 (FS) TYP(3) PLACES (ON-1)
GR500A-5D(9)(ON-1)
GR500A-5F (ON-1)
GR500A-5D(8)(ON-1)
(ZONE 5B)
A
DRILL 1/4 (.250-.254) (2) HOLES
NAS674V4(2), AN960D416L(2)
NAS697-C4(2), MS20426AD3(4)
CSK IN LDW280M17418 (NS) (ON-1)
GR500A-5F (ON-1)
GR500A-5D (9) (ON
GR500A-5D(8)(ON-
LDW280-23524(REF)
+Z27.000 FWD BEAM PANEL REF PLANE-SEE NOTE # 1

LDW280-52541-1 INSTL
-3 ASSY
VIEW LOOKING UP

CODE IDENT NO. 26512
LDW280-52541 SH 3

01/03
NAS 9-1100

G120-040-10-4A(REF)
LDW280-17906-13(REF)
TEMPLATE BUTT LINE
LDW280-52 509 (REF)
80
30
MS20470DD5 (ON-3)
G120-040-10-4A(ON-3)
LDW280-17239-17 (ON-3)
MS20470DD4(10) (ON-3)
GR500A-4D (ON-1)
MS20470DD4 (ON-3)
GR500A-4C(8) (ON-1)
LDW280-23902 (REF)
MS20470DD5 (ON-1)
GR500A-5J (ON-1)
1OTO PHOTO BUTT LINE ON SHEET 4
5
MS20470DD4(6)(ON-3)
MS20470DD5(2)(ON-3)
.244 MIN
LDW280-17240-16 (ON-3)
.219 MIN
GR500A-5G (9) (ON-1)
PHOTO BUTT LINE
GR500A-5J (ON-1)
MS20470DD4(9) (ON-3)
GR500A-4F (ON-1)
GR500A-4C (6) (ON-1)
MS20470DD4(2) (ON-3)
MS20470DD4(7) (ON-3)
MS20470DD5(2) (ON-3)
(ZONE 2A)
J
.275 MIN
+X131.140 (REF)
GB511K-08-3 (3)
GN512H-08 (3) (ON-1)
LDW280-17242-12 (REF)
LDW280-17238-11 (REF)
LDW280M17546-1(REF)
MS20470DD4(4) (ON-1)
J
LDW280-23531(REF)
165-171(BRILL # 19) (4 HOLES) (ON-3)
NAS 697 A08 (4)
NAS 1097 AD3(8)
CSK LDW280-17948-11 (NS)
MS20470DD4(8) (ON-3)
MS20470DD5(2) (ON-3)
MS20470DD4
MFD HEAD FS (ON-1)
.55
LDW280-17140-13(REF)
LDW280-17948-11 (ON-3)
LDW280-23902(REF)
GR500A-5G(11)(ON-1)
LDW280-17238-17 (ON-3)
.212 MIN
250MIN
MS20470DD4(6)(ON-3)
MS20470DD4(7) (ON-3)
LDW280-17240-14 (ON-3)
(REF)
MS20470DD4(8) (ON-3)
MS20470DD5 (2) (ON-3)
.187 MIN
MS20470DD4(25) (ON-3)
GB511K-08-5 (3)
GN512H-08 (3) (ON-1)
MS20470DD4(11) (ON-1)
4(7)(ON-3)
) (ON-3)
LDW280-17242-12 (REF)
MS20470DD4
MFD HEAD FS (ON-1)
C
MS20470DD4(6) (ON-3)
+Y81.000(REF)
.275MIN
MS20470DD4(9)(ON-3)
GR500A-5G(2) (ON-1)
SEE NOTE #4
C
(ZONE 2A)
LDW280-23524(REF)
.244 MIN
.250 MIN
SECTION A-A (ZONE 6A)
7ODD4(6) (ON-3)
7ODD5(2) (ON-1)
MS20470DD4(9) (ON-3)
.219MIN
LDW280-17240-12 (ON-3)
LDW280-17140-13 (REF)
17546-1(ON-1)
MS20470DD4(12)(ON-1)
GR500A-4F (ON-1)
MS20470DD4(3) (ON-3)
GR500A-4C(6)(ON-1)
MS20470DD4(6) (ON-3)
MS20470DD4
MFD HEAD FS (ON-1)
470DD 4(18)(ON-1)
A-46(2)(ON-1)
OA-4C(8)(ON-1)
MS20470DD4(4)(ON-1)
LDW280-17242-12 (NS) (ON-3)
LDW280-17240-17 (FS) (ON-3)
LDW 280-17140-15 (REF)
ASSY
GB511K-08-3 (3)
GN512H-08 (3) (ON-1)
-4H(2)(ON-1)
GR500A-5F (ON-1)
GR500A-5D (9) (ON-1)
GR500A-5D(8) (ON-1)
LL 1/4 (.250-.254) (2) HOLES
S674V4(2) AN960D416L(2)
S697-C4(2) MS20426AD3(4)
K IN LDW280M17418 (NS) (ON-1)
GB511K-08-4 (3)
GN512H-08 (3)
CBORE .343 DIA X .051 CORNER R
X .099/.089 REMAINING MATL
IN LDW280M17418 (FS) TYP (3)
PLACES (ON-1)
LDW280-23524(REF)
-Z 27.000 AFT BEAM PANEL
REF PLANE
+Y81.000 R H END BULKHEAD
REF PLANE
LDW280-52528(REF)
LDW280M17746-13(REF)
+Y68.745(REF)
LDW280M17501-1(REF)
+Y70.495(REF)
LDW280-17140-13(REF)
+X131.140 (REF)
SECTION B-B (ZONE 9B)
LDW280-17140-13(REF)
LDW280-17242-12(REF)
+X131.140 (REF)
LDW280-17240-17 (REF)
SECTION C-C (ZONE 4B)
MS20470AD4(8) (ON-3)
LDW280-17140-13(REF)
LDW 280-17242-12 (REF)
LDW280-17948-11 (REF)
7 EQ SPACES
1/2
1/4
SECTION J-J (ZONE 4 B)
-Y
FWD
+Z
-Z
+Y
LDW280-52541-1(REF)
FOR ENGRG REF ONLY (NO SCALE)
VIEW LOOKING UP
5
4
3
2
1

NOTES:

1. FOR BASIC JIG DATA SEE LDW280-23511.
2. INSTALL FASTENERS PER LSP14-15303
3. TOLERANCE ON LINES MARKED ⟸ TO BE ± 1/32
4. INSTALL RIVETS WET WITH. EPON 919 PER LSP14-14102 IN AREAS INDICATED
5. TOLERANCE ON LOFTED LOCATIONS OF FASTENERS THRU LDW280-17140-13 TO BE ± 1/32, OTHERS TO BE LOCATED FROM PILOT HOLES IN DETAIL PARTS.
6. HI-LOK PINS & COLLARS TO BE IN ACCORDANCE WITH APPLICABLE PORTIONS OF MIL-N-25027 & NAS 498.
7. FASTENER MANUFACTURED HEAD (OTHER THAN CSK ATTACHMENTS) TO BE ON WEB SIDE UNLESS OTHERWISE SPECIFIED.
8. PERMISSIBLE OIL CAN DEPTH OF WEBS BETWEEN STIFFENERS IS ± 1/32.
9. INSTALL FASTENERS PER LSP-14-15302 & LSP-14-15306.

CODE IDENT NO. 26512
LDW280-52541 SH 3

CODE IDENT NO. 26512
LDW280-52541 SH 3

LEM
MODEL OF END ITEM
GRUMMAN AIRCRAFT ENGRG CORP.
J 26512 LDW28
SCALE FULL
FOR PHOTO REPRO

02/03

NAS 9-1100

THIS IS AN ORIGINAL

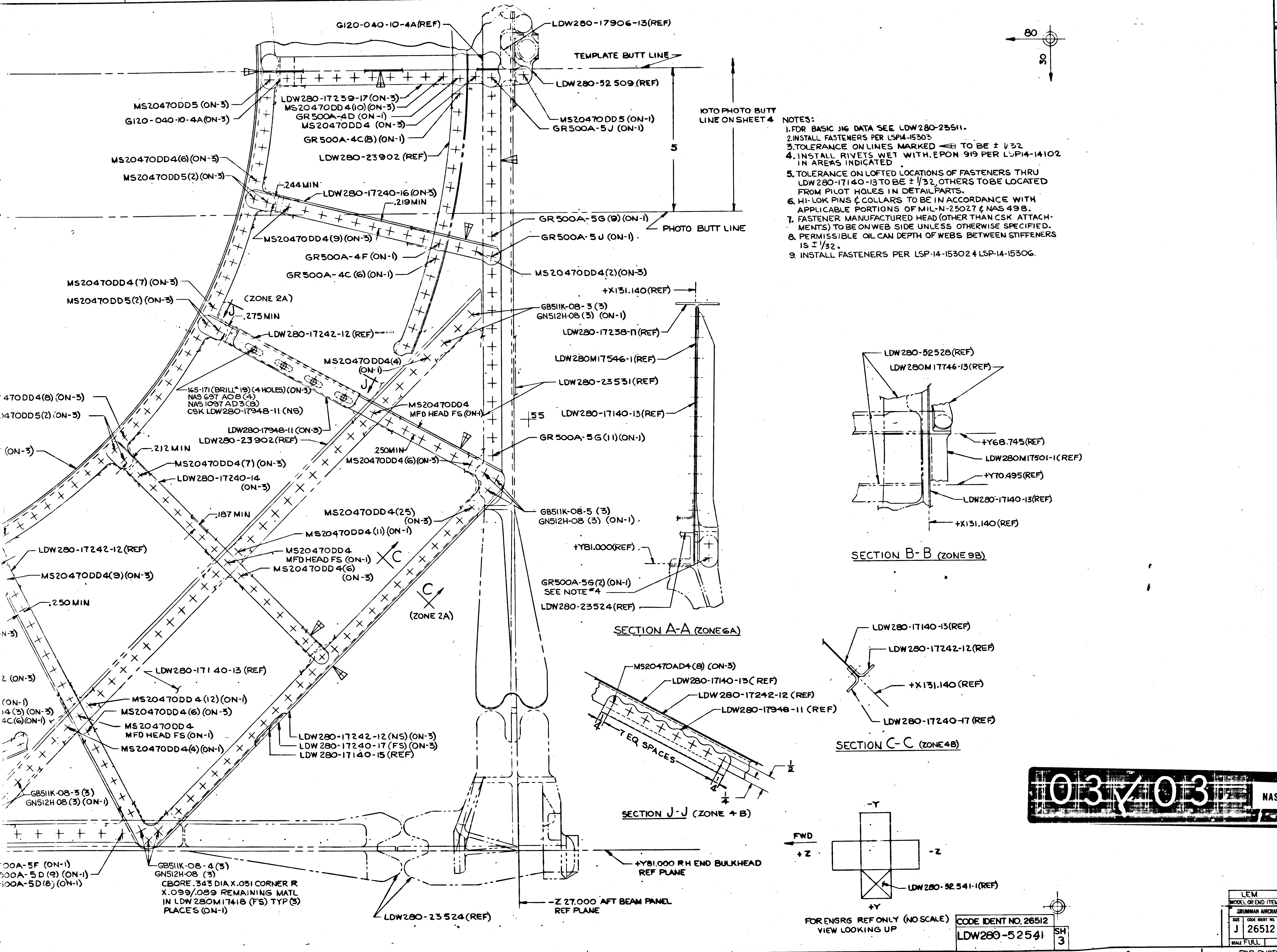

G120-040-10-4A(REF)
LDW280-17906-13(REF)
TEMPLATE BUTT LINE
LDW280-52509(REF)
MS20470DD5 (ON-3)
G120-040-10-4A(ON-3)
LDW280-17239-17(ON-3)
MS20470DD4(10)(ON-3)
GR500A-4D (ON-1)
MS20470DD4 (ON-3)
GR500A-4C(8)(ON-1)
LDW280-23902 (REF)
MS20470DD5 (ON-1)
GR500A-5J (ON-1)
10TO PHOTO BUTT LINE ON SHEET 4
5
MS20470DD4(6)(ON-3)
MS20470DD5(2)(ON-3)
.244 MIN
LDW280-17240-16(ON-3)
.219 MIN
GR500A-5G(9)(ON-1)
PHOTO BUTT LINE
GR500A-5J (ON-1)
MS20470DD4(9)(ON-3)
GR500A-4F (ON-1)
GR500A-4C(6)(ON-1)
MS20470DD4(2)(ON-3)
MS20470DD4(7)(ON-3)
MS20470DD5(2)(ON-3)
(ZONE 2A)
.275 MIN
LDW280-17242-12 (REF)
+X131.140(REF)
GB511K-08-3 (3)
GN512H-08 (3) (ON-1)
LDW280-17238-11(REF)
LDW280M17546-1(REF)
MS20470DD4(4) (ON-1)
LDW280-23531(REF)
165-171 (BRILL #19) (4 HOLES) (ON-3)
NAS 697 A08 (4)
NAS 1097 AD3 (8)
CSK LDW280-17948-11 (NS)
MS20470DD4 MFD HEAD FS (ON-1)
470DD4(8) (ON-3)
470DD5(2) (ON-3)
55
LDW280-17140-13(REF)
LDW280-17948-11 (ON-3)
LDW280-23902(REF)
GR500A-5G(11)(ON-1)
(ON-3)
.212 MIN
250MIN
MS20470DD4(6)(ON-3)
MS20470DD4(7) (ON-3)
LDW280-17240-14 (ON-3)
GB511K-08-5 (3)
GN512H-08 (3) (ON-1)
.187 MIN
MS20470DD4(25) (ON-3)
MS20470DD4(11) (ON-1)
LDW280-17242-12 (REF)
MS20470DD4 MFD HEAD FS (ON-1)
MS20470DD4(6) (ON-3)
C
MS20470DD4(9)(ON-3)
+Y81.000(REF)
GR500A-5G(2)(ON-1) SEE NOTE #4
LDW280-23524(REF)
.250 MIN
C
(ZONE 2A)
N-3)
SECTION A-A (ZONE 6A)
LDW280-17140-13 (REF)
2 (ON-3)
(ON-1)
4(3) (ON-3)
4C(6)(ON-1)
MS20470DD4(12)(ON-1)
MS20470DD4(6) (ON-3)
MS20470DD4 MFD HEAD FS (ON-1)
MS20470DD4(4)(ON-1)
LDW280-17242-12 (NS) (ON-3)
LDW280-17240-17 (FS) (ON-3)
LDW280-17140-15 (REF)
GB511K-08-3 (3)
GN512H 08 (3) (ON-1)
00A-5F (ON-1)
00A-5D (9) (ON-1)
00A-5D(8) (ON-1)
GB511K-08-4 (3)
GN512H-08 (3)
CBORE .343 DIA X .051 CORNER R X .099/.089 REMAINING MATL IN LDW280M17418 (FS) TYP (3) PLACES (ON-1)
LDW280-23524(REF)
-Z 27.000 AFT BEAM PANEL REF PLANE
+Y81.000 RH END BULKHEAD REF PLANE
MS20470AD4(8) (ON-3)
LDW280-17140-13 (REF)
LDW280-17242-12 (REF)
LDW280-17948-11 (REF)
7 EQ SPACES
1/2
1/4
SECTION J-J (ZONE 4B)
80
30
LDW280-52528(REF)
LDW280M17746-13(REF)
+Y68.745(REF)
LDW280M17501-1(REF)
+Y70.495(REF)
LDW280-17140-13(REF)
+X131.140(REF)
SECTION B-B (ZONE 9B)
LDW280-17140-13(REF)
LDW280-17242-12(REF)
+X131.140 (REF)
LDW280-17240-17 (REF)
SECTION C-C (ZONE 4B)
FWD
-Y
+Z
-Z
+Y
LDW280-52541-1(REF)
FOR ENGRG REF ONLY (NO SCALE) VIEW LOOKING UP

NOTES:

1. FOR BASIC JIG DATA SEE LDW280-23511.
2. INSTALL FASTENERS PER LSP14-15303
3. TOLERANCE ON LINES MARKED ◄ TO BE ± 1/32
4. INSTALL RIVETS WET WITH. EPON 919 PER LSP14-14102 IN AREAS INDICATED
5. TOLERANCE ON LOFTED LOCATIONS OF FASTENERS THRU LDW280-17140-13 TO BE ± 1/32, OTHERS TO BE LOCATED FROM PILOT HOLES IN DETAIL PARTS.
6. HI-LOK PINS & COLLARS TO BE IN ACCORDANCE WITH APPLICABLE PORTIONS OF MIL-N-25027 & NAS 498.
7. FASTENER MANUFACTURED HEAD (OTHER THAN CSK ATTACHMENTS) TO BE ON WEB SIDE UNLESS OTHERWISE SPECIFIED.
8. PERMISSIBLE OIL CAN DEPTH OF WEBS BETWEEN STIFFENERS IS ± 1/32.
9. INSTALL FASTENERS PER LSP-14-15302 & LSP-14-15306.

MANUFACTURING OPERATIONS
UNLESS OTHERWISE SPECIFIED
NOTES CHECKED ✓ APPLY TO THIS DWG.

RUBBER STAMP PART NUMBER AND ALL OTHER MARKINGS IN REGION MARKED ☒ USE BOTH SIDES IF NECESSARY.	✓
FILLET AND INSIDE CORNER RADII TOLERANCES .016R TO .062R ± .010 .063R TO .250R ± .015 OVER .250R ± .030	
DEPTH SHOWN FOR TAPPED HOLES IS FULL THDS. 2-3 IMP THDS. BEYOND PERMISSIBLE.	
EXTERNAL THREAD LENGTH SHOWN INCLUDES 2 IMPERFECT THREADS MAX.	
DO NOT CADMIUM PLATE & PAINT HOLES OR SURFACES MARKED WITH DOUBLE ASTERISK.	
MISMATCH STEP OF ± .005 PERMISSIBLE DUE TO CHANGE OF CUTTERS AT INSIDE INTERSECTING SURFACES.	
DIAMETERS MARKED MUST BE CONCENTRIC WITHIN FULL INDICATOR READING	
HOLES MUST BE KEPT FREE OF CHROME PLATING SOLUTION.	
ALL DIMENSIONS SHOWN TO BE MET AFTER CADMIUM PLATING. THICKNESS OF PLATE .0003 MIN. TO .0005 MAX. MIN. THICKNESS TO BE .0002 ON THREADED AREAS. NO ALLOWANCE FOR PLATING IN HOLES	
125 √ SURFACE ROUGHNESS INCLUDING REAMED HOLES PER MIL-STD-10	
250 √ FOR ALL DRILLED HOLES	
REMOVE ALL BURRS. BREAK ALL EDGES .015-.030	
INSPECTION INFORMATION MINIMUM PERMISSIBLE ~~AVERAGE~~ EDGE DISTANCE ~~MARKED~~ IS 1 1/2 FASTENER DIA FROM FASTENER ℄	✓
SYMBOL √ DENOTES SURFACE TO BE MACHINED	
UNLESS OTHERWISE SPECIFIED TOLERANCE ON FLANGES IS ± 1/32	
LENGTHS OF AN, NAS & MS AL ALY RIVETS SHORTER THAN 1 INCH ARE NOT SPECIFIED.	
TOLERANCE ON LOFTED DELINEATIONS IS ± 1/16 EXCEPT AS NOTED	✓

DWG SIZE 34 X

PRINTING INFO ONLY

81-R-

03 ✓ 03

NAS 9-1100

CODE IDENT NO. 26512
LDW280-52541 SH 3

LEM
MODEL OR END ITEM

GRUMMAN AIRCRAFT ENGRG CORP., BETHPAGE, L. I., NEW YORK

SIZE	CODE IDENT NO.		
J	26512	LDW280-52541	B
SCALE FULL		SHEET 3.00	

LDW280-52541 B

LDW280-52541 B

FOR PHOTO REPRODUCTION K2

THIS IS AN ORIGINAL DRAWING

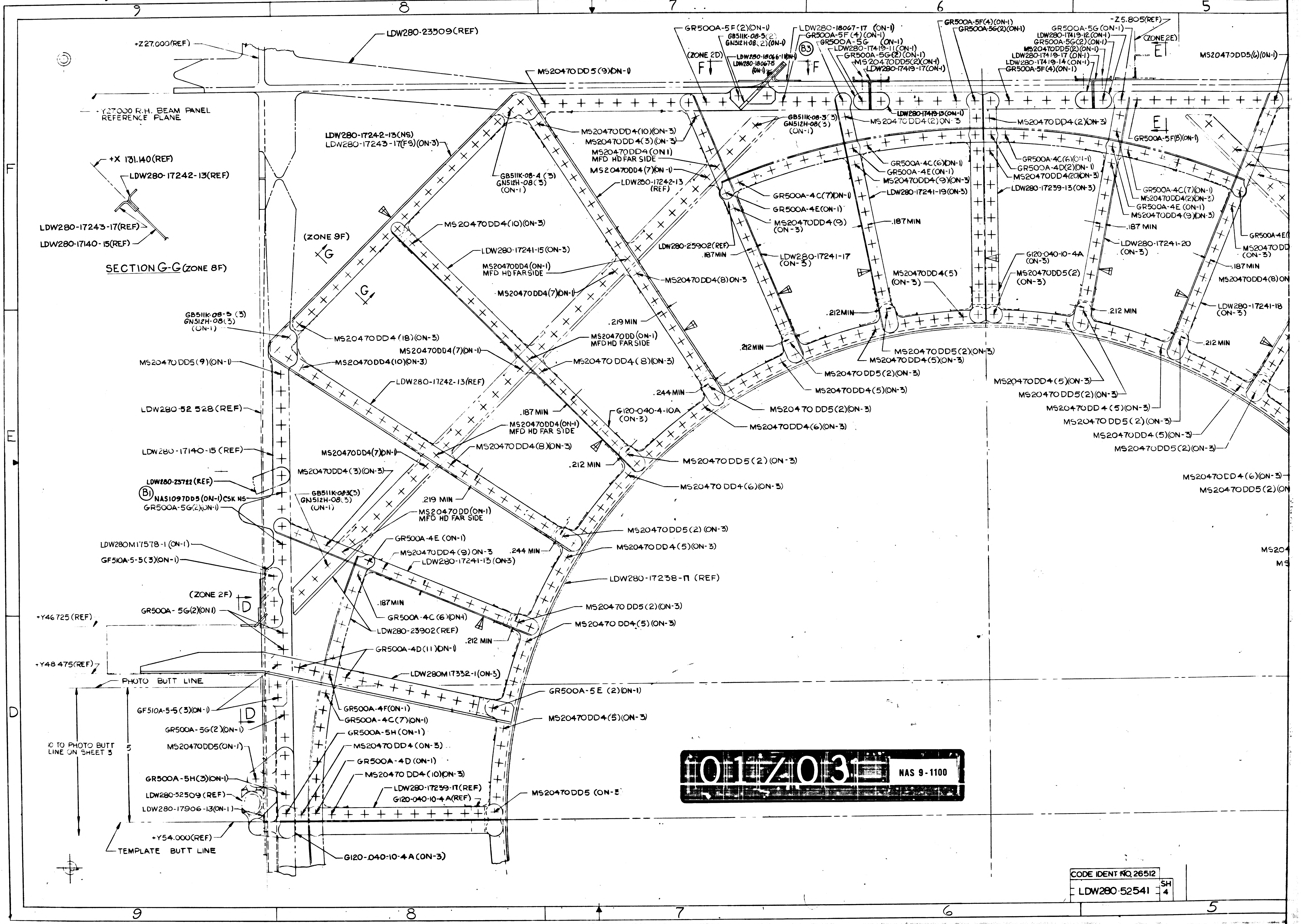
9
8
7
6
5
F
E
D
LDW280-23509(REF)
+Z27.000(REF)
Y27.000 R.H. BEAM PANEL REFERENCE PLANE
+X 131.140(REF)
LDW280-17242-13(REF)
LDW280-17243-17(REF)
LDW280-17140-15(REF)
SECTION G-G (ZONE 8F)
MS20470DD5(9)(ON-1)
GR500A-5F(2)(ON-1)
GB511K-08-5(2)
GN512H-08(2)(ON-1)
(ZONE 2D)
F
LDW280-18066-11(ON-1)
LDW280-18067-15 (ON-1)
LDW280-18067-17 (ON-1)
GR500A-5F(4)(ON-1)
GR500A-5G (ON-1)
B3
LDW280-17419-11(ON-1)
GR500A-5G(2)(ON-1)
MS20470DD5(2)(ON-1)
LDW280-17419-17(ON-1)
F
GR500A-5F(4)(ON-1)
GR500A-5G(2)(ON-1)
-Z5.805(REF)
GR500A-5G(ON-1)
LDW280-17419-12(ON-1)
GR500A-5G(2)(ON-1)
MS20470DD5(2)(ON-1)
LDW280-17419-17(ON-1)
LDW280-17419-14(ON-1)
GR500A-5F(4)(ON-1)
(ZONE 2E)
E
MS20470DD5(6)(ON-1)
LDW280-17419-13(ON-1)
GB511K-08-3(3)
GN512H-08(3)
(ON-1)
MS20470DD4(2)ON-3
MS20470DD4(2)(ON-3)
E
GR500A-5F(8)(ON-1)
LDW280-17242-13(NS)
LDW280-17243-17(FS)(ON-3)
MS20470DD4(10)(ON-3)
MS20470DD4(3)(ON-3)
MS20470DD4(ON1) MFD HD FAR SIDE
MS20470DD4(7)(ON-1)
LDW280-17242-13 (REF)
GB511K-08-4(3)
GN512H-08(3)
(ON-1)
GR500A-4C(6)(ON-1)
GR500A-4E(ON-1)
MS20470DD4(9)(ON-3)
GR500A-4C(6)(ON-1)
GR500A-4D(2)(ON-1)
MS20470DD4(20)(ON-3)
GR500A-4C(7)(ON-1)
MS20470DD4(2)(ON-3)
GR500A-4E(ON-1)
MS20470DD4(9)(ON-3)
GR500A-4C(7)(ON-1)
GR500A-4E(ON-1)
MS20470DD4(9)(ON-3)
LDW280-17241-19(ON-3)
LDW280-17239-13(ON-3)
.187 MIN
.187 MIN
GR500A-4E
MS20470DD
(ON-3)
.187 MIN
MS20470DD4(8)ON
(ZONE 9F)
G
G
MS20470DD4(10)(ON-3)
LDW280-17241-15(ON-3)
MS20470DD4(ON-1) MFD HD FAR SIDE
MS20470DD4(7)(ON-1)
LDW280-25902(REF)
.187 MIN
LDW280-17241-17 (ON-3)
MS20470DD4(8)ON-3
MS20470DD4(5) (ON-3)
G120-040-10-4A (ON-3)
MS20470DD5(2) (ON-3)
LDW280-17241-20 (ON-3)
LDW280-17241-18 (ON-3)
.212 MIN
.212 MIN
.212 MIN
.212 MIN
GB511K-08-5(3)
GN512H-08(3)
(ON-1)
MS20470DD4(18)(ON-3)
MS20470DD5(9)(ON-1)
MS20470DD4(10)(ON-3)
.219 MIN
MS20470DD(ON-1) MFD HD FAR SIDE
MS20470DD4(7)(ON-1)
MS20470DD4(8)(ON-3)
MS20470DD5(2)(ON-3)
MS20470DD4(5)(ON-3)
MS20470DD5(2)(ON-3)
MS20470DD4(5)(ON-3)
MS20470DD4(5)(ON-3)
MS20470DD5(2)(ON-3)
MS20470DD4(5)(ON-3)
MS20470DD5(2)(ON-3)
MS20470DD4(5)(ON-3)
MS20470DD5(2)(ON-3)
LDW280-52528(REF)
LDW280-17242-13(REF)
.244 MIN
MS20470DD5(2)(ON-3)
MS20470DD4(6)(ON-3)
.187 MIN
G120-040-4-10A (ON-3)
MS20470DD4(ON-1) MFD HD FAR SIDE
MS20470DD4(8)(ON-3)
LDW280-17140-15(REF)
MS20470DD4(7)(ON-1)
MS20470DD4(3)(ON-3)
.212 MIN
MS20470DD5(2)(ON-3)
MS20470DD4(6)(ON-3)
MS20470DD4(6)(ON-3)
MS20470DD5(2)(ON
LDW280-23722(REF)
B1
NAS1097DD5(ON-1)CSK NS
GR500A-5G(2)(ON-1)
GB511K-08-3(3)
GN512H-08(3)
(ON-1)
.219 MIN
MS20470DD(ON-1) MFD HD FAR SIDE
MS20470DD5(2)(ON-3)
GR500A-4E(ON-1)
MS20470DD4(9)ON-3
.244 MIN
MS20470DD4(5)(ON-3)
LDW280-17241-13(ON-3)
LDW280M17578-1(ON-1)
GF510A-5-5(3)(ON-1)
LDW280-17238-11 (REF)
MS204
MS
(ZONE 2F)
D
.187 MIN
GR500A-5G(2)(ON1)
GR500A-4C(6)(ON-1)
+Y46.725(REF)
LDW280-23902(REF)
MS20470DD5(2)(ON-3)
MS20470DD4(5)(ON-3)
.212 MIN
GR500A-4D(11)(ON-1)
+Y48.475(REF)
LDW280M17332-1(ON-3)
PHOTO BUTT LINE
GF510A-5-5(3)(ON-1)
D
GR500A-5E(2)(ON-1)
GR500A-4F(ON-1)
GR500A-4C(7)(ON-1)
MS20470DD4(5)(ON-3)
GR500A-5G(2)(ON-1)
GR500A-5H(ON-1)
10 TO PHOTO BUTT LINE ON SHEET 3
5
MS20470DD5(ON-1)
MS20470DD4(ON-3)
GR500A-4D(ON-1)
GR500A-5H(3)(ON-1)
MS20470DD4(10)(ON-3)
LDW280-52509(REF)
LDW280-17239-11(REF)
G120-040-10-4A(REF)
MS20470DD5(ON-3)
LDW280-17906-13(ON-1)
+Y54.000(REF)
TEMPLATE BUTT LINE
G120-040-10-4A(ON-3)
9
8
7
6
5

01Z03

NAS 9-1100

CODE IDENT NO. 26512

LDW280-52541

SH 4

5 4 3 2 1

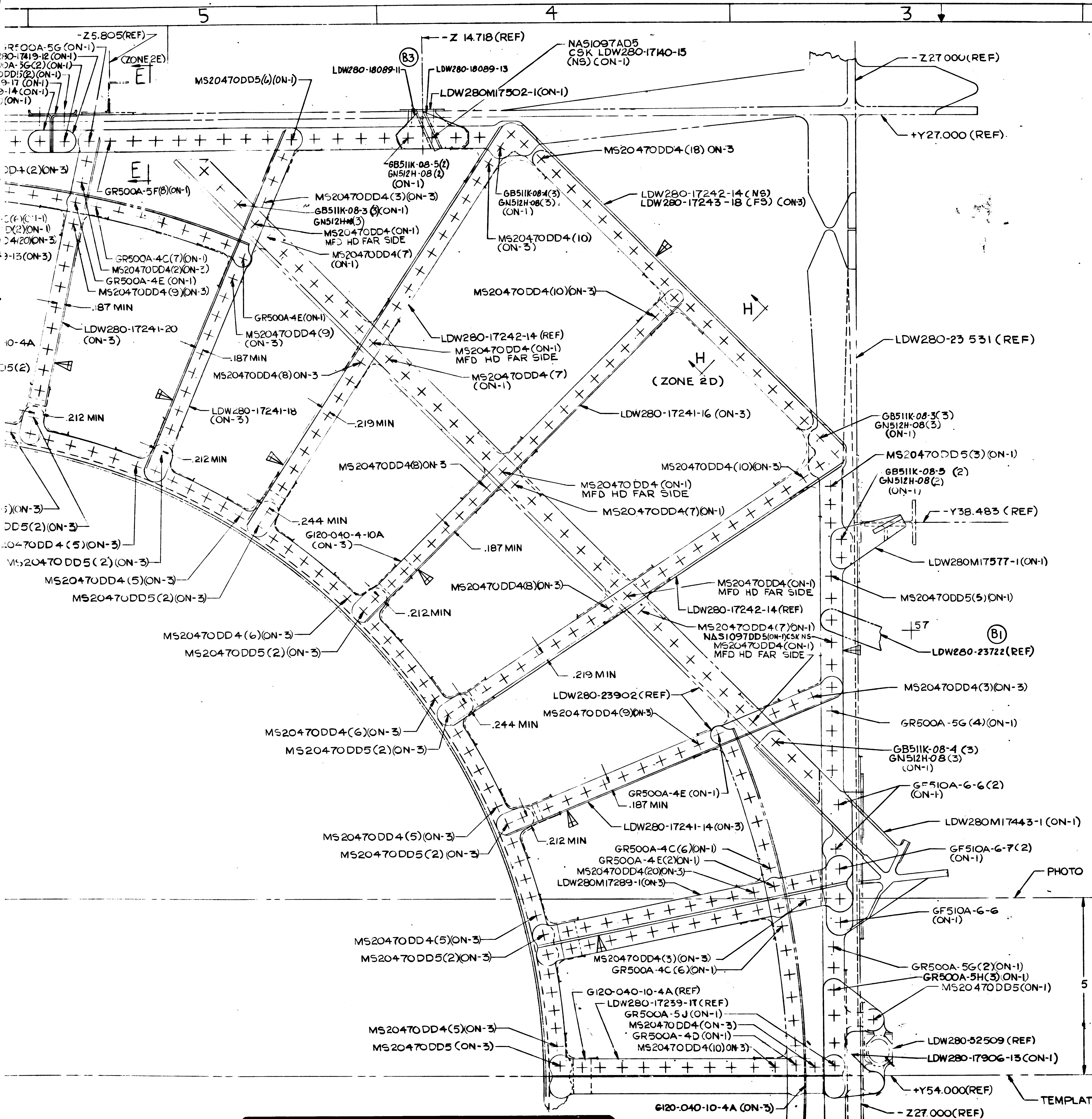

-Z5.805(REF)
GR500A-5G (ON-1)
-17419-12 (ON-1)
-5G(2)(ON-1)
DD15(2)(ON-1)
-17 (ON-1)
-14 (ON-1)
(ON-1)
(ZONE 2E)
E
MS20470DD5(6)(ON-1)
LDW280-18089-11
B3
LDW280-18089-13
-Z 14.718 (REF)
NAS1097AD5
CSK LDW280-17140-15
(NS) (ON-1)
LDW280M17502-1(ON-1)
-Z27.000(REF)
+Y27.000 (REF)
MS20470DD4 (18) ON-3
GB511K-08-5(2)
GN512H-08 (2)
(ON-1)
GB511K-08-4(3)
GN512H-08(3)
(ON-1)
LDW280-17242-14 (NS)
LDW280-17243-18 (FS) (ON-3)
DD4(2)(ON-3)
E
GR500A-5F(8)(ON-1)
MS20470DD4(3)(ON-3)
GB511K-08-3 (3)(ON-1)
GN512H-(3)
MS20470DD4 (ON-1)
MFD HD FAR SIDE
MS20470DD4(7)
(ON-1)
MS20470DD4(10)
(ON-3)
(1)(ON-1)
(2)(ON-1)
(20)(ON-3)
-13(ON-3)
GR500A-4C(7)(ON-1)
MS20470DD4(2)(ON-3)
GR500A-4E (ON-1)
MS20470DD4(9)(ON-3)
.187 MIN
GR500A4E(ON-1)
MS20470DD4(10)(ON-3)
H
LDW280-17241-20
(ON-3)
MS20470DD4(9)
(ON-3)
LDW280-17242-14 (REF)
MS20470DD4(ON-1)
MFD HD FAR SIDE
H
-4A
.187MIN
MS20470DD4(8)ON-3
MS20470DD4(7)
(ON-1)
(ZONE 2D)
LDW280-23531 (REF)
5(2)
LDW280-17241-18
(ON-3)
.212 MIN
.219 MIN
LDW280-17241-16 (ON-3)
GB511K-08-3(3)
GN512H-08(3)
(ON-1)
.212 MIN
MS20470DD4(8)ON-3
MS20470DD4(10)(ON-3)
MS20470DD5(3)(ON-1)
GB511K-08-5 (2)
GN512H-08(2)
(ON-1)
MS20470DD4 (ON-1)
MFD HD FAR SIDE
MS20470DD4(7)(ON-1)
-Y38.483 (REF)
(ON-3)
DD5(2)(ON-3)
.244 MIN
G120-040-4-10A
(ON-3)
-470DD4 (5)(ON-3)
.187 MIN
LDW280M17577-1(ON-1)
MS20470DD5(2)(ON-3)
MS20470DD4(5)(ON-3)
MS20470DD4(8)(ON-3)
MS20470DD4(ON-1)
MFD HD FAR SIDE
LDW280-17242-14(REF)
MS20470DD5(5)(ON-1)
MS20470DD5(2)(ON-3)
.212MIN
+57
B1
MS20470DD4(6)(ON-3)
MS20470DD4(7)(ON-1)
NAS1097DD5(ON-1)CSK NS
MS20470DD4(ON-1)
MFD HD FAR SIDE
LDW280-23722(REF)
MS20470DD5(2)(ON-3)
.219 MIN
LDW280-23902(REF)
MS20470DD4(3)(ON-3)
MS20470DD4(9)(ON-3)
.244 MIN
GR500A-5G (4)(ON-1)
MS20470DD4(6)(ON-3)
MS20470DD5(2)(ON-3)
GB511K-08-4 (3)
GN512H-08(3)
(ON-1)
GR500A-4E (ON-1)
.187 MIN
GF510A-6-6(2)
(ON-1)
LDW280-17241-14(ON-3)
LDW280M17443-1 (ON-1)
MS20470DD4(5)(ON-3)
.212 MIN
MS20470DD5(2) (ON-3)
GR500A-4C(6)(ON-1)
GR500A-4E(2)(ON-1)
MS20470DD4(20)(ON-3)
LDW280M17289-1(ON-3)
GF510A-6-7(2)
(ON-1)
PHOTO BUTT LINE
GF510A-6-6
(ON-1)
MS20470DD4(5)(ON-3)
MS20470DD5(2)(ON-3)
MS20470DD4(3)(ON-3)
GR500A-4C (6)(ON-1)
GR500A-5G(2)(ON-1)
GR500A-5H(3)(ON-1)
MS20470DD5(ON-1)
G120-040-10-4A(REF)
LDW280-17239-17(REF)
GR500A-5J (ON-1)
MS20470DD4(ON-3)
GR500A-4D (ON-1)
MS20470DD4(10)(ON-3)
MS20470DD4(5)(ON-3)
MS20470DD5 (ON-3)
LDW280-52509 (REF)
LDW280-17906-13(ON-1)
+Y54.000(REF)
TEMPLATE BUTT LINE
G120-040-10-4A (ON-3)
-Z27.000(REF)
10 TO PHOTO BUTT
LINE ON SHEET 3
5

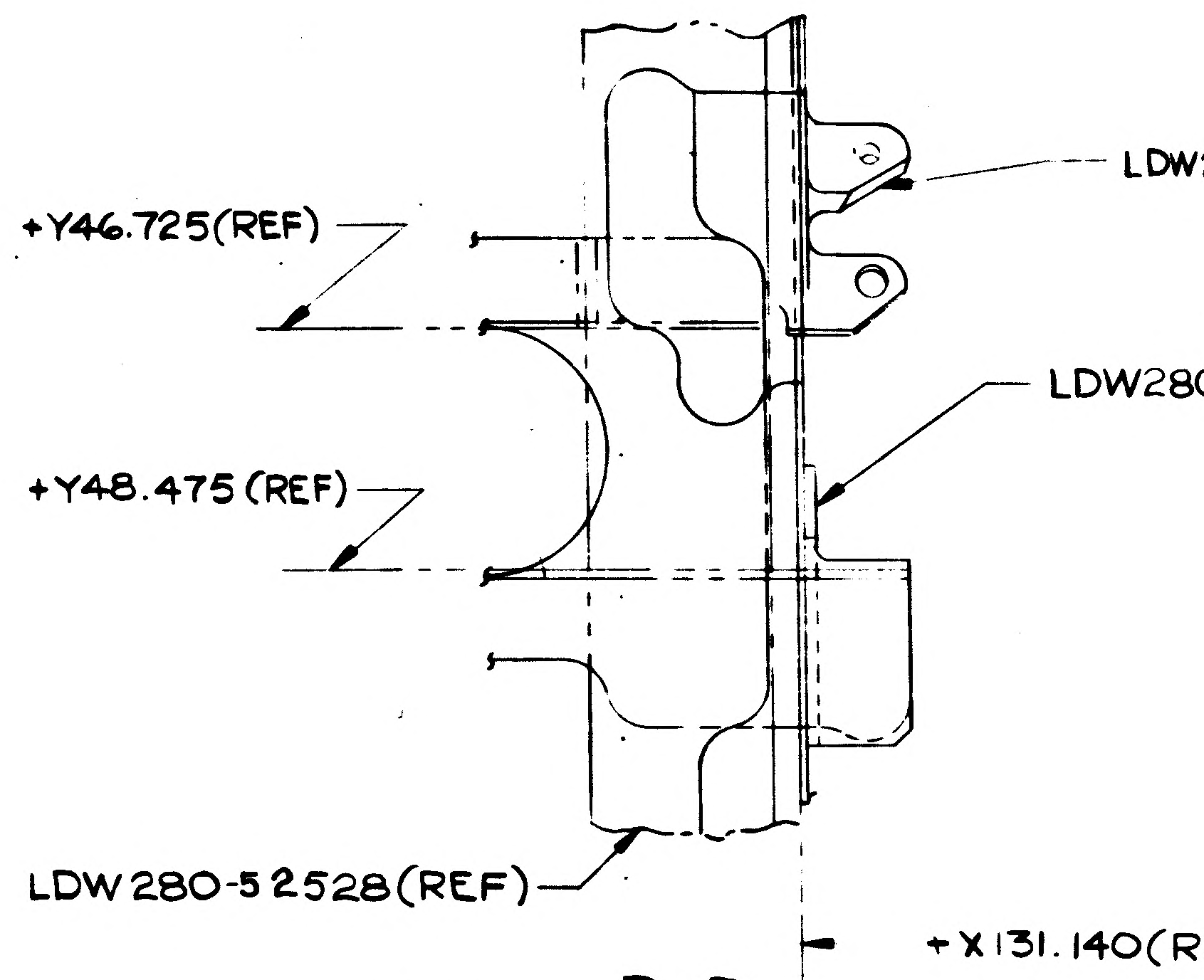

LDW280M17578-1(REF)
+Y46.725(REF)
LDW280M17332-1(REF)
+Y48.475(REF)
LDW280-52528(REF)
+X131.140(REF)

SECTION D-D (ZONE 9D)

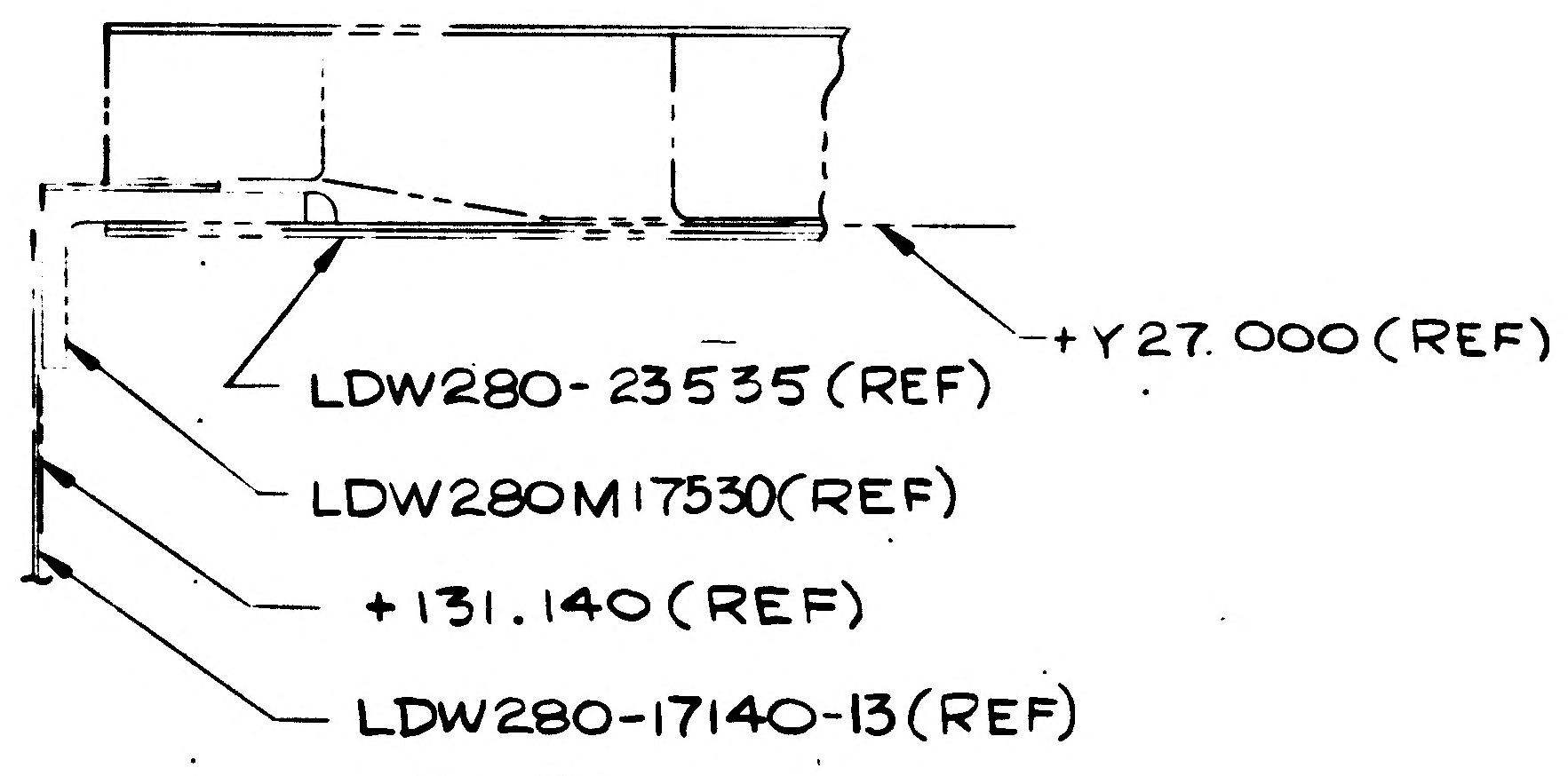

+Y27.000(REF)
LDW280-23535 (REF)
LDW280M17530(REF)
+131.140 (REF)
LDW280-17140-13(REF)

SECTION E-E (ZONE 5F)

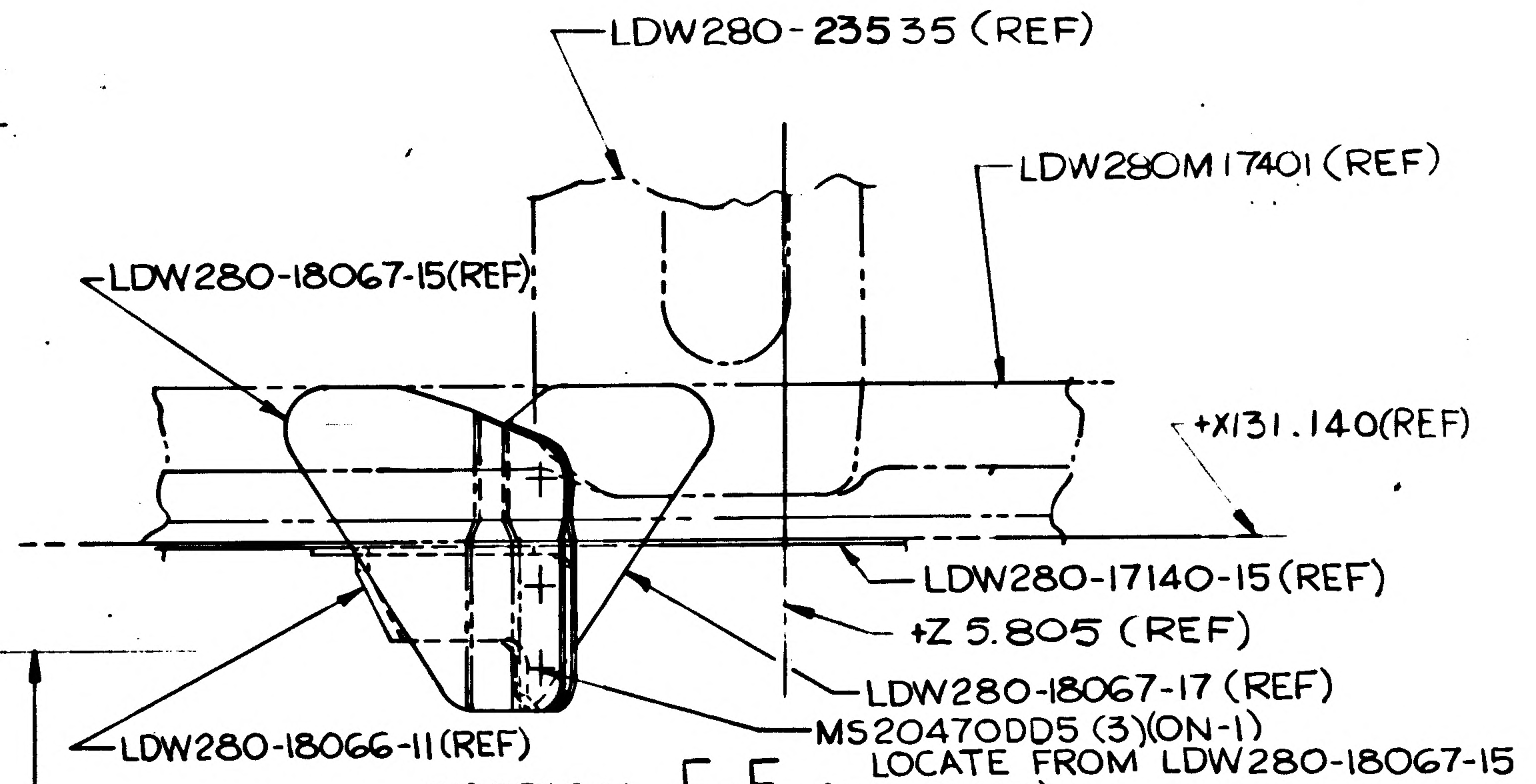

LDW280-23535 (REF)
LDW280M17401 (REF)
LDW280-18067-15(REF)
+X131.140(REF)
LDW280-17140-15 (REF)
+Z 5.805 (REF)
LDW280-18067-17 (REF)
LDW280-18066-11(REF)
MS20470DD5 (3)(ON-1)
LOCATE FROM LDW280-18067-15

SECTION F-F (ZONE 7F)

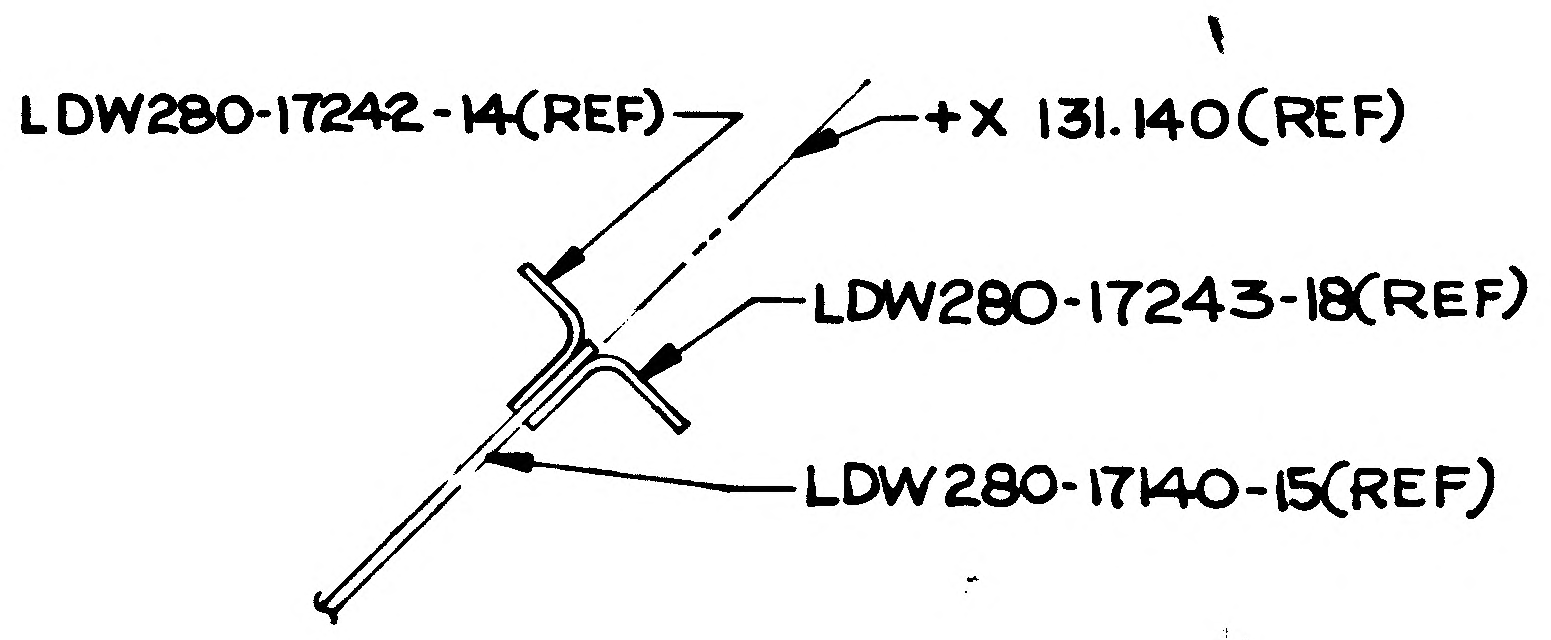

LDW280-17242-14(REF)
+X 131.140(REF)
LDW280-17243-18(REF)
LDW280-17140-15(REF)

SECTION H-H (ZONE 3F)

02/03

NAS 9-1100

CODE IDENT NO. 26512
LDW280-52541 SH 4

CODE IDENT NO. 26512
LDW280-52541 SH 4

LEM
MODEL & ENG TEM
GRUMMAN AIRCRAFT ENGRG CORP., BETH
SIZE J CODE IDENT NO 26512 LDW280
SCALE FULL
FOR PHOTO

THIS IS AN ORIG

5 4 3 2 1

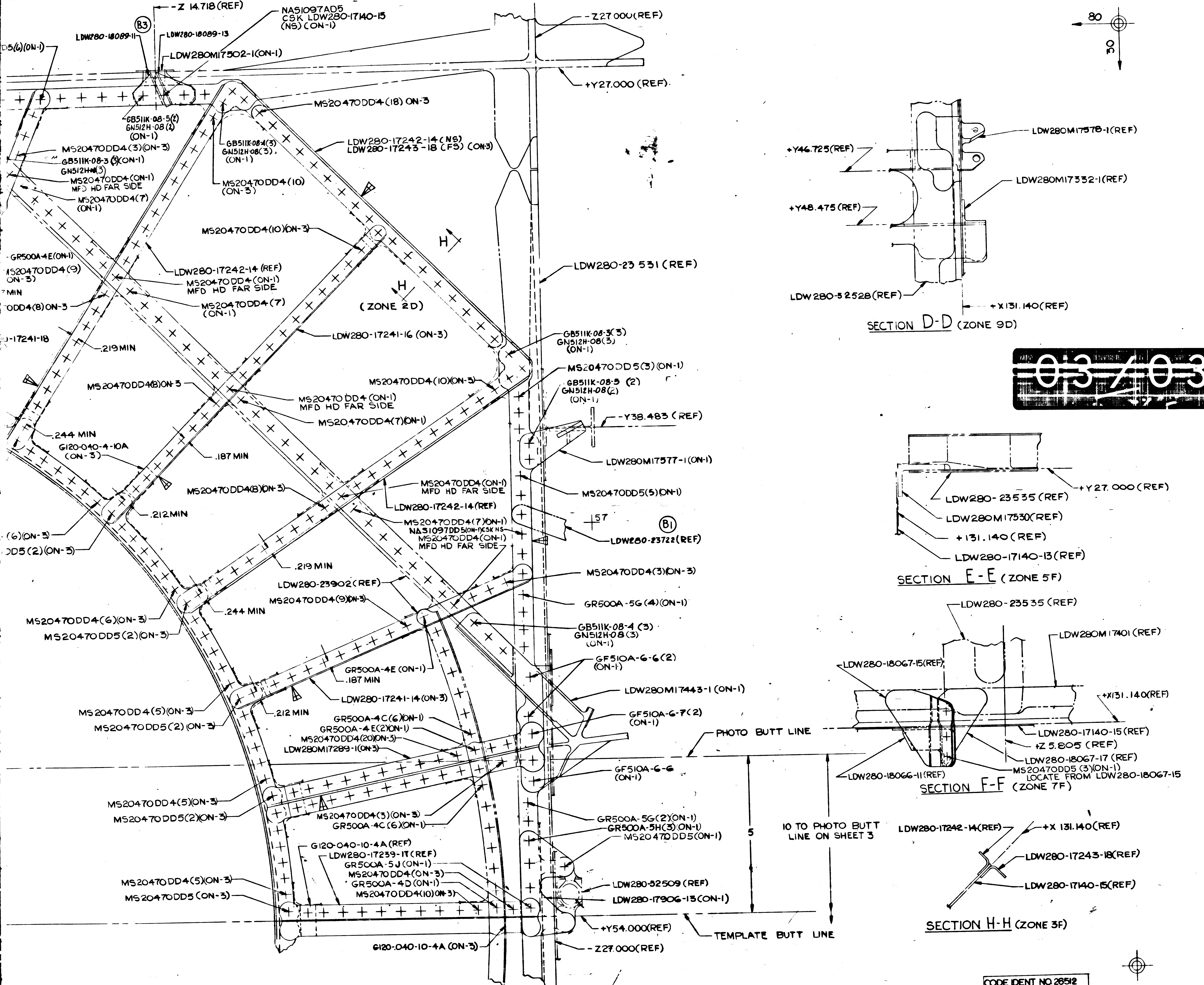
4
3
2
1
Z 14.718 (REF)
NAS1097AD5
CSK LDW280-17140-15
(NS) (ON-1)
B3
LDW280-18089-11
LDW280-18089-13
LDW280M17502-1(ON-1)
D5(6)(ON-1)
GB511K-08-5(2)
GN512H-08(2)
(ON-1)
GB511K08-4(3)
GN512H-08(3).
(ON-1)
MS20470DD4(18) ON-3
LDW280-17242-14 (NS)
LDW280-17243-18 (FS) (ON-3)
MS20470DD4(3)(ON-3)
GB511K-08-3 (3)(ON-1)
GN512H-08(3)
MS20470DD4(ON-1)
MFD HD FAR SIDE
MS20470DD4(7)
(ON-1)
MS20470DD4(10)
(ON-3)
MS20470DD4(10)(ON-3)
GR500A4E(ON-1)
MS20470DD4(9)
(ON-3)
7MIN
DD4(8)ON-3
LDW280-17242-14 (REF)
MS20470DD4(ON-1)
MFD HD FAR SIDE
MS20470DD4(7)
(ON-1)
H
(ZONE 2D)
17241-18
.219MIN
LDW280-17241-16 (ON-3)
MS20470DD4(8)ON-3
MS20470DD4(10)(ON-3)
MS20470 DD4 (ON-1)
MFD HD FAR SIDE
MS20470DD4(7)(ON-1)
.244 MIN
G120-040-4-10A
(ON-3)
.187 MIN
MS20470DD4(8)ON-3
MS20470DD4(ON-1)
MFD HD FAR SIDE
LDW280-17242-14(REF)
MS20470DD4(7)(ON-1)
NAS1097DD5(ON-1)CSK NS
MS20470DD4(ON-1)
MFD HD FAR SIDE
.212MIN
(6)(ON-3)
D5(2)(ON-3)
.219 MIN
LDW280-23902(REF)
MS20470DD4(9)(ON-3)
MS20470DD4(6)(ON-3)
MS20470DD5(2)(ON-3)
.244 MIN
GR500A-4E (ON-1)
.187 MIN
LDW280-17241-14(ON-3)
MS20470DD4(5)(ON-3)
MS20470DD5(2) (ON-3)
.212 MIN
GR500A-4C(6)(ON-1)
GR500A-4E(2)(ON-1)
MS20470DD4(20)(ON-3)
LDW280M17289-1(ON-3)
MS20470DD4(5)(ON-3)
MS20470DD5(2)(ON-3)
MS20470DD4(3)(ON-3)
GR500A-4C (6)(ON-1)
G120-040-10-4A (REF)
LDW280-17239-17 (REF)
GR500A-5J (ON-1)
MS20470DD4(ON-3)
GR500A-4D (ON-1)
MS20470DD4(10)(ON-3)
MS20470DD4(5)(ON-3)
MS20470DD5 (ON-3)
G120-040-10-4A (ON-3)
Z27.000(REF)
+Y27.000 (REF)
LDW280-23 531 (REF)
GB511K-08-3(3)
GN512H-08(3)
(ON-1)
MS20470DD5(3)(ON-1)
GB511K-08-5 (2)
GN512H-08(2)
(ON-1)
-Y38.483 (REF)
LDW280M17577-1(ON-1)
MS20470DD5(5)(ON-1)
57
B1
LDW280-23722(REF)
MS20470DD4(3)(ON-3)
GR500A-5G (4)(ON-1)
GB511K-08-4 (3)
GN512H08(3)
(ON-1)
GF510A-6-6(2)
(ON-1)
LDW280M17443-1 (ON-1)
GF510A-6-7(2)
(ON-1)
PHOTO BUTT LINE
GF510A-6-6
(ON-1)
GR500A-5G(2)(ON-1)
GR500A-5H(3)(ON-1)
MS20470DD5(ON-1)
5
10 TO PHOTO BUTT
LINE ON SHEET 3
LDW280-32509 (REF)
LDW280-17906-13(ON-1)
+Y54.000(REF)
-Z27.000(REF)
TEMPLATE BUTT LINE
80
30
LDW280M17578-1(REF)
+Y46.725(REF)
LDW280M17332-1(REF)
+Y48.475(REF)
LDW280-32528(REF)
+X131.140(REF)
SECTION D-D (ZONE 9D)
+Y27.000(REF)
LDW280-23535 (REF)
LDW280M17530(REF)
+131.140 (REF)
LDW280-17140-13(REF)
SECTION E-E (ZONE 5F)
LDW280-23535 (REF)
LDW280M17401 (REF)
LDW280-18067-15(REF)
+X131.140(REF)
LDW280-17140-15(REF)
+Z 5.805 (REF)
LDW280-18067-17 (REF)
MS20470DD5 (3)(ON-1)
LOCATE FROM LDW280-18067-15
LDW280-18066-11(REF)
SECTION F-F (ZONE 7F)
LDW280-17242-14(REF)
+X 131.140(REF)
LDW280-17243-18(REF)
LDW280-17140-15(REF)
SECTION H-H (ZONE 3F)

03/03 NAS 9-1100

MANUFACTURING OPERATIONS
UNLESS OTHERWISE SPECIFIED
NOTES CHECKED ✓ APPLY TO THIS DWG.

PART NUMBER
AND ALL OTHER MARKINGS
IN REGION MARKED ▭
USE BOTH SIDES IF NECESSARY.

FILLET AND INSIDE CORNER
RADII TOLERANCES
.016R TO .062R ± .010
.063R TO .250R ± .015
OVER .250R ± .030

DEPTH SHOWN FOR TAPPED
HOLES IS FULL THDS. 2-3 IMP THDS.
BEYOND PERMISSIBLE.

EXTERNAL THREAD LENGTH
SHOWN INCLUDES
2 IMPERFECT THREADS MAX.

DO NOT CADMIUM PLATE & PAINT
HOLES OR SURFACES MARKED
WITH DOUBLE ASTERISK.

MISMATCH STEP OF ± .005
PERMISSIBLE DUE TO CHANGE
OF CUTTERS AT INSIDE
INTERSECTING SURFACES.

DIAMETERS MARKED
MUST BE CONCENTRIC WITHIN
FULL INDICATOR
READING

HOLES MUST BE KEPT FREE OF
CHROME PLATING SOLUTION.

ALL DIMENSIONS SHOWN TO BE MET
AFTER CADMIUM PLATING.
THICKNESS OF PLATE .0003 MIN.
TO .0005 MAX. MIN. THICKNESS TO
BE .0002 ON THREADED AREAS.
NO ALLOWANCE FOR PLATING IN
HOLES

125 SURFACE ROUGHNESS
INCLUDING REAMED HOLES
PER MIL-STD-10

200 FOR ALL DRILLED HOLES

REMOVE ALL BURRS.
BREAK ALL EDGES .015-.031

INSPECTION INFORMATION
MINIMUM PERMISSIBLE
AVERAGE EDGE DISTANCE
MARKED IS

SYMBOL √ DENOTES SURFACE
TO BE MACHINED

UNLESS OTHERWISE SPECIFIED
TOLERANCE ON FLANGES IS ± 1/32

LENGTHS OF AN, NAS & MS AL ALY
RIVETS SHORTER THAN 1 INCH ARE
NOT SPECIFIED.

TOLERANCE ON LOFTED
DELINEATIONS IS

DWG SIZE 34 X 94

FULL SIZE SHEET AREA (36 X 96) = 24.0 SQ. FT.

LDW280-52541 B

CODE IDENT NO. 26512
LDW280-52541
SH 4

LEM
MODEL OR END ITEM
GRUMMAN AIRCRAFT ENGRG CORP., BETHPAGE, L. I., NEW YORK

SIZE	CODE IDENT NO.		
J	26512	LDW280-52541	B
SCALE FULL		SHEET 4.00	

FOR PHOTO REPRODUCTION K.T.

THIS IS AN ORIGINAL DRAWING

ENG 32.1 REV 3-65

GRUMMAN AIRCRAFT ENGINEERING CORP.
CODE IDENT NO. 26512
ENGINEERING ORDER

DWG. NO. LDW280-52541 | EO NO. C1
CONTROL INFO NO. LDW280A 0932

IN F/D, B/M & MOD/BLK
ADD LDW280-52541-5 DECK INSTL IDENT TO LDW280-52541-1 DECK INSTL EXCEPT AS NOTED BELOW

ON -5 LDW280-52541-7 DECK ASSY REPLACES & IS IDENT TO LDW280-52541-3 DECK ASSY EXCEPT LDW280-17140-17 REPLACES LDW280-17140-15

IN MOD/BLK -1 IS EFF ON LM-2 (32)
-5 IS EFF ON LM-3 (33)
QTY 1/MOD

-1 MAY BE REWORKED INTO -5 BY REPLACING LDW280-17140-15 WITH LDW280-17140-17

2

DETAIL SPEC REQ ☐	CL II ENGRG CHG ☐	CL I ENGRG CHG ☐

REASON FOR EO: INCREASE STRENGTH REQD

DESCRIPTION OF EO: IN F/D, B/M & MOD/BLK ADDED -5 INSTL & -7 ASSY; -1 EFF WAS LM-2 (32) & LM-3 (33)

GAEC EO RELEASE: LE 10/4

MODEL	EFFECTIVITY PROCURING ACTIVITY NO.	GAEC UNIT NO.	SUB CONTR UNIT NO.
LM		LM-3(33)	

DRAWING CHANGE REQD		DISPOSITION OF PARTS	
✓		✓	
REVISE DWG	RECORD EO	REWORK	SCRAP

APPROVED BY					WPB		RMC (EO)	
DATE	10/3/66	10/6/66			10/3/66		10-3	10-3-66
	VDI	~~SUPPORT~~ WTS.	RELIAB. GROUP	GROUP LEADER	STRESS GROUP	LIAISON ENGRG	PROJ ENGRG	GOVT

PRIORITY	DRAWING TITLE	DRAWING NO.	EO NO.
C	DESCENT STAGE DECK INSTALLATION RH LOWER	LDW280-52541	C1

ISSUED BY G. BARNES / J. STRAKOSCH X1392 SECTION VDI GROUP NO. 335 PL 35

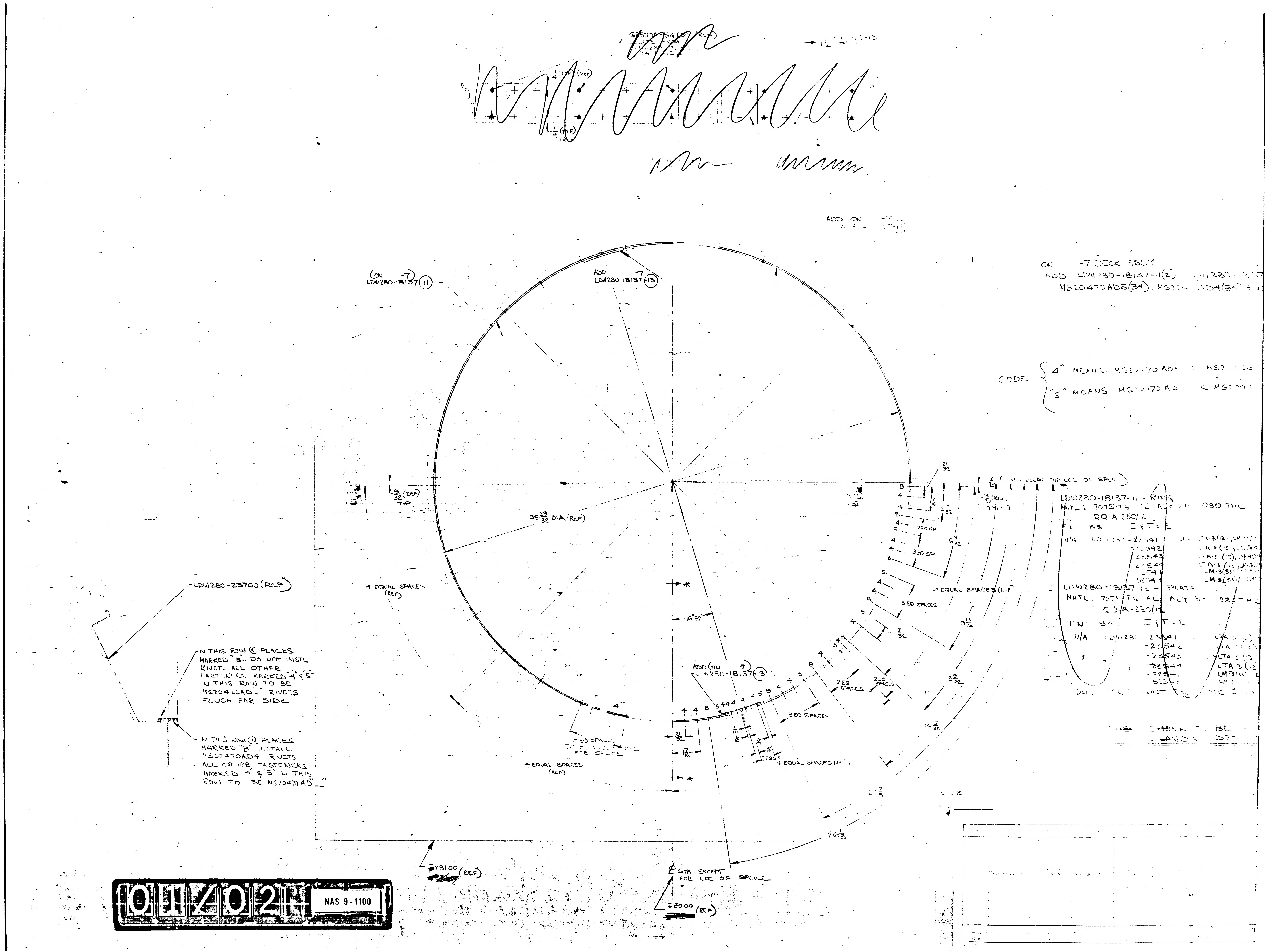
ADD ON -7
(ON -7
LDW280-18137-⑪
ADD -7
LDW280-18137-⑬
ON -7 DECK ASSY
ADD LDW280-18137-11(2)
MS20470AD5(34) MS204 AD4(34)
CODE
"4" MEANS MS20470 AD4 MS2042
"5" MEANS MS20470 AD MS2042
35 29/32 DIA (REF)
9/32 (REF) TYP
21/32
1/16
2 3/32
3/32 (REF) TYP
EXCEPT FOR LOC OF SPLICE)
2 EQ SP
3 EQ SP
6 3/32
4 EQUAL SPACES (REF)
3 EQ SPACES
9 13/16
21/32
2 EQ SPACES
13 3/32
16 5/32
3 EQ SPACES
4 EQUAL SPACES (REF)
2 EQ SP
27 7/8
26 3/8
16°52'
4 EQUAL SPACES (REF)
3 EQ SPACES
FOR SPLICE
4 EQUAL SPACES (REF)
ADD (ON -7
LDW280-18137-⑬
21/32
7/16
LDW280-23700 (REF)
IN THIS ROW @ PLACES MARKED "B"-- DO NOT INSTL RIVET. ALL OTHER FASTENERS MARKED "4" & "5" IN THIS ROW TO BE MS20426AD"_" RIVETS FLUSH FAR SIDE
IN THIS ROW ② PLACES MARKED "B" INSTALL MS20470AD4 RIVETS ALL OTHER FASTENERS MARKED "4" & "5" IN THIS ROW TO BE MS20470AD"_"
YB100 (REF)
℄ STA EXCEPT FOR LOC OF SPLICE
Z 20.00 (REF)
LDW280-18137-11 - RING -
MATL: 7075-T6 AL ALY SH .080 THK
QQ-A 250/12
FIN 88 I & T-E
N/A LDW280-23541 LTA-3(13), LM-4
-23542 LTA-2 (13), LM-3(33)
-23543 LTA-2 (13), LM-4(34)
-23544 LTA-3 (13), LM-3(33)
-52541 LM-3(33)
52543 LM-3(33)
LDW280-18137-13 - PLATE
MATL: 7075-T6 AL ALY SH .083 THK
QQ-A-250/12
FIN 88 I & T-E
N/A LDW280-23541 LTA-3 (13)
-23542 LTA (13)
-23543 LTA-2 (13)
-23544 LTA-3 (13)
-52541 LM-3(33)
-52543 LM-3
DWG TOL EXACT ± 1/32 DEC ±

01/024 NAS 9-1100

02/02 NAS 9-1100

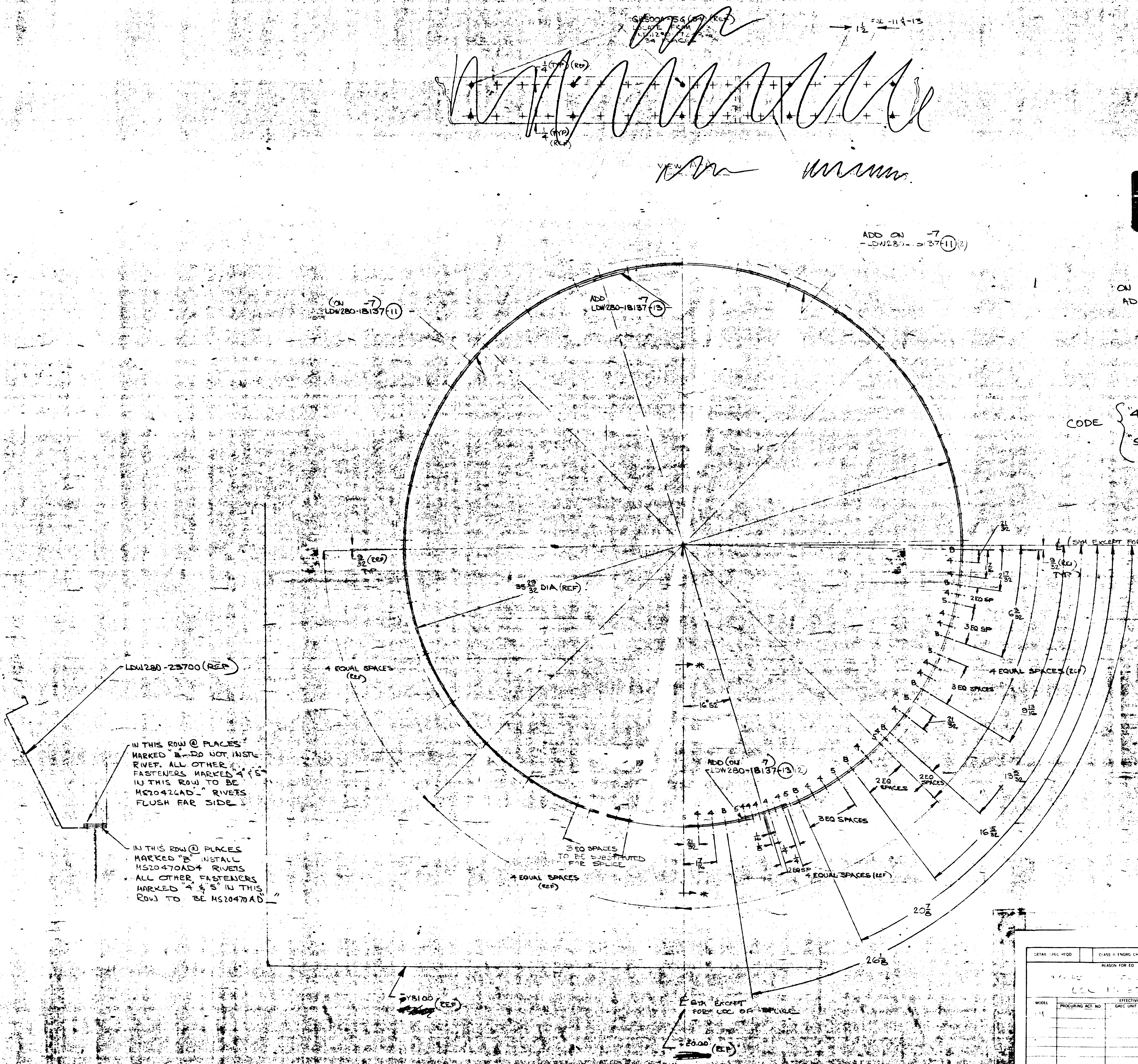

1½ FOR -11 & -13
¼ (TYP) (REF)
ADD ON -7 -LDW280-18137-⑪(2)
(ON -7) LDW280-18137-⑪
ADD LDW280-18137-⑬ -7
ADD (ON -7) LDW280-18137-⑬(2)
35 29/32 DIA (REF)
9/32 (REF) TYP
9/32 (REF) TYP
℄ (SYM EXCEPT FOR LOC OF SPLICE)
LDW280-23700 (REF)
4 EQUAL SPACES (REF)
4 EQUAL SPACES (REF)
3 EQ SPACES
2 EQ SP
2 EQ SPACES
3 EQ SPACES
3 EQ SPACES TO BE SUBSTITUTED FOR SPLICE
4 EQUAL SPACES (REF)
4 EQUAL SPACES (REF)
2 EQ SP
21/32
16 5/32
13 3/32
9 13/16
6 3/32
16 5/32
20 7/8
26 1/8
YB100 (REF)
℄ SYM EXCEPT FOR LOC OF SPLICE
Z 20.00 (REF)

IN THIS ROW @ PLACES MARKED "B" DO NOT INSTL RIVET. ALL OTHER FASTENERS MARKED "4" & "5" IN THIS ROW TO BE MS20426AD_ RIVETS FLUSH FAR SIDE.

IN THIS ROW @ PLACES MARKED "B" INSTALL MS20470AD4 RIVETS ALL OTHER FASTENERS MARKED "4" & "5" IN THIS ROW TO BE MS20470AD_

ON -7 DECK ASSY
ADD LDW280-18137-11(2), LDW280-18137-13(2), MS20470AD4(84
MS20470AD5(34), MS20426AD4(84) & MS20426AD5(34)

CODE { "4" MEANS MS20470AD4 OR MS20426AD4 / "5" MEANS MS20470AD5 OR MS20426AD5 } SE ECT

LDW280-18137-11 - RING -
MATL: 7075-T6 AL ALY SH .080 THK
QQ-A-250/12
FIN: 88 I & T = E

N/A LDW280-23541	EFF LTA-3(13), LM-4(34) THRU LM-15(45)	2/MOD
-23542	LTA-3(13), LM-3(33) THRU LM-15(45)	2/MOD
-23543	LTA-3 (13), LM-4(34) THRU LM-15(45)	2/MOD
-23544	LTA-3 (13) LM-3(33) THRU LM-15(45)	2/MOD
52541	LM-3(33)	2/MOD
52543	LM-3(33)	2/MOD

LDW280-18137-13 - PLATE
MATL: 7075-T6 AL ALY SH .080 THK
QQ-A-250/12
FIN: 83 I & T = E

N/A LDW280-23541	EFF LTA-3(13), LM-4(34) THRU LM 15(45)	2/MOD
-23542	LTA-3 (13), LM-3(33) THRU LM-15(45)	2/MOD
-23543	LTA-3 (13), LM-4(34) THRU LM-15(45)	2/MOD
-23544	LTA-3 (13), LM-3(33) THRU LM-15(45)	2/MOD
-52541	LM-3(33)	2/MOD
-52543	LM-3(33)	2/MOD

DWG TOL - FRACT ± 1/32 DEC ±.010 ANG ± ½°

~~THIS REWORK TO BE ACCOMPLISHED PRIOR TO LANDING DROP TESTS ON LTA-3~~

DETAIL SPEC REQD		CLASS II ENGRG CHG		CLASS ENGRG CHG	

REASON FOR EO
LCC 1 . 573

DESCRIPTION OF EO

MODEL: LM

EFFECTIVITY: PROCURING ACT NO | GAEC UNIT NO | SUB CONTR UNIT NO

DRAWING REVISION: REVISE DWG | RECORD EO
DISPOSITION OF PARTS: REWORK | SCRAP
DATE BY | SUPPORT | RELIAB GROUP | GROUP LEADER
PRIORITY
DRAWING TITLE
ENGINEERING ORDER

ISSUED BY: S EAU / T STRACH | SECTION | GROUP NO | PL
CC IDENT NO 26512
GRUMMAN AIRCRAFT ENGINEERING CORP
BETHPAGE N Y

ENG 32 3 REV 3 65

A.G.

GRUMMAN AIRCRAFT ENGINEERING CORP.
CODE IDENT NO. 26512
ENGINEERING ORDER

DWG NO. LDW280-52541
EO NO. C2
CONTROL INFO NO. LM-2-2881

IN FLD/DWG & B/M FOR -1
REPLACE LDW280-18067-15 & -17
WITH LDW280-18067-21 & -23 RESPECTIVELY

DETAIL SPEC REQ	☐	CL II ENGRG CHG	☐	CL I ENGRG CHG ☐

2

REASON FOR EO: FLANGES ON DETAIL PARTS REVERSED

DESCRIPTION OF EO: IN FLD & B/M FOR -1 LDW280-18067-21 & -23 WERE LDW280-18067-15 & -17

Ⓡ GAEC EO RELEASE: FR

MODEL	PROCURING ACTIVITY NO.	GAEC UNIT NO.	SUB CONTR UNIT NO
LM		LM-2(32)	
		[redacted]	

DRAWING CHANGE REQD: REVISE DWG	RECORD EO	DISPOSITION OF PARTS: REWORK	SCRAP
✓		✓	

APPROVED BY									
DATE	10/19				10-11-66	10-11-66	10-12-66	10-11-66
10/10/66	VD1	SUPPORT	RELIAB GROUP	GROUP LEADER	STRESS GROUP	LIAISON ENGRG	PROJ ENGRG	~~GOVT~~

PRIORITY: C
DRAWING TITLE: DECK INSTALLATION DESCENT STAGE ~ R.H. LOWER
DRAWING NO.: LDW280-52541
EO NO.: C2

ISSUED BY LIAISON J. MALONEY X3604 SECTION V.D.I. GROUP NO. 335 PL 35

01 NAS 9-1100

AG
ENG 32.1 REV 3-65
*

GRUMMAN AIRCRAFT ENGINEERING CORP.
CODE IDENT NO. 26512
ENGINEERING ORDER

DWG. NO. LDW280-52541
EO NO. C3
CONTROL INFO NO. LM-2-2981

IN FLD/DWG & B/M FOR -5
REPLACE LDW280-18067-15 & -17
WITH LDW280-18067-21 & -23 RESPECTIVELY

2

DETAIL SPEC REQ		CL II ENGRG CHG		CL I ENGRG CHG	

REASON FOR EO	DESCRIPTION OF EO	GAEC EO RELEASE
FLANGES ON DETAIL PARTS REVERSED	IN FLD & B/M FOR -5 LDW280-18067-21 & -23 WERE LDW280-18067-15 & -17 RESPECTIVELY	R C FR 02025

MODEL	PROCURING ACTIVITY NO.	GAEC UNIT NO.	SUB CONTR UNIT NO.
LM		LM-3(33)	

DRAWING CHANGE REQD: REVISE DWG	RECORD EO	DISPOSITION OF PARTS: REWORK	SCRAP
✓		✓	

APPROVED BY	JAS				caw	Eaw	RMC	JRF
DATE	11/9/66				11/8/66	11/8/66	11-9-66	11/8/66
-6-	VD1	SUPPORT	RELIAB. GROUP	~~GROUP LEADER~~	STRESS GROUP	LIAISON ENGRG	PROJ ENGRG	~~CONT~~

PRIORITY	DRAWING TITLE	DRAWING NO.	EO NO.
C	DECK INSTALLATION DESCENT STAGE ~ R.H. LOWER	LDW280-52541	C3

ISSUED BY LIAISON J. MALONEY 11/7/66 X3604
SECTION V.D.I.
GROUP NO. 335
PL 35

01 NAS 9-1100

ENG 32.2 REV 3-65

GRUMMAN AIRCRAFT ENGINEERING CORP.
CODE IDENT NO. 26512
ENGINEERING ORDER

DWG. NO. LDW280-52541 | EO NO. C5
CONTROL INFO NO. LDW280A3616

ZONES 3B & 8B:
(SH 3.00)

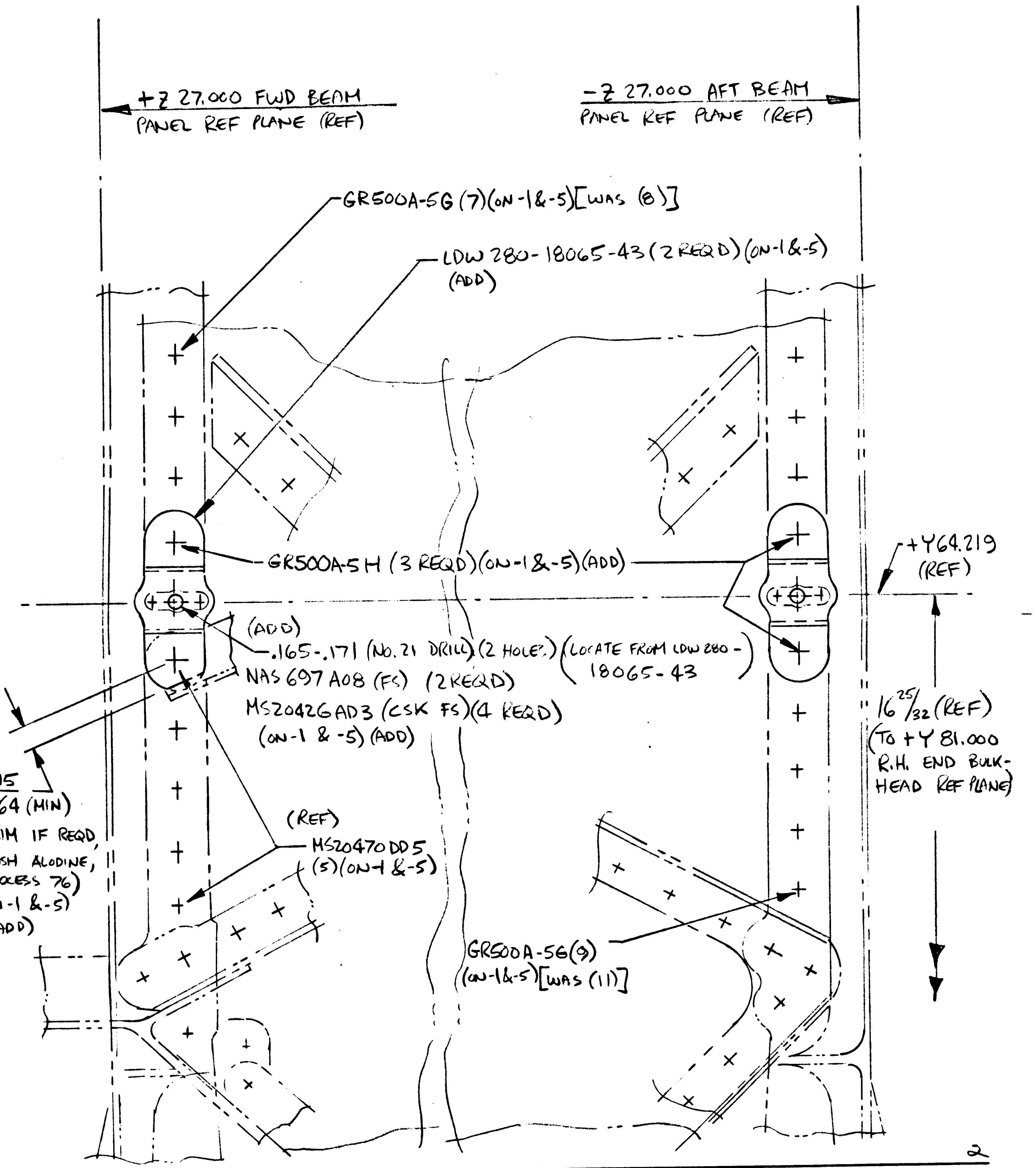

+Z 27.000 FWD BEAM PANEL REF PLANE (REF)
-Z 27.000 AFT BEAM PANEL REF PLANE (REF)
GR500A-5G (7)(ON-1 & -5)[WAS (8)]
LDW 280-18065-43 (2 REQD)(ON-1 & -5) (ADD)
GR500A-5H (3 REQD)(ON-1 & -5)(ADD)
+Y64.219 (REF)
(ADD)
.165-.171 (No. 21 DRILL)(2 HOLES)(LOCATE FROM LDW 280-18065-43
NAS 697 A08 (FS) (2 REQD)
MS20426AD3 (CSK FS)(4 REQD) (ON-1 & -5)(ADD)
16 25/32 (REF) (TO +Y 81.000 R.H. END BULKHEAD REF PLANE)
15/64 (MIN) (TRIM IF REQD, BRUSH ALODINE, PROCESS 76) (ON-1 & -5) (ADD)
(REF)
MS20470DD5 (5)(ON-1 & -5)
GR500A-5G (9) (ON-1 & -5)[WAS (11)]
2

DETAIL SPEC REQ	☐	CL II ENGRG CHG	☑	CL I ENGRG CHG	☐

REASON FOR EO: TO ELIMINATE INTERFERENCE BETWEEN THERMAL SHIELD STRAPS AND He TANK & BATTERY SUPTS

DESCRIPTION OF EO: ADDED LDW280-18065-43 (2), NAS697A08 (2), MS20426AD3 (4), GR500A-5H (3) TO -1 & -5
GR500A-5G (16) WAS (19) ON -1 & -5

GAEC EO RELEASE: FR 12/6/66

EFFECTIVITY			
MODEL	PROCURING ACTIVITY NO.	GAEC UNIT NO.	SUB CONTR UNIT NO.
LM		LM-2 (32)	
LM		LM-3 (33)	

DRAWING CHANGE REQD		DISPOSITION OF PARTS		APPROVED BY	JRS							
✓		✓		DATE	12/2/66				12/6/66		12-6-66	
REVISE DWG	RECORD EO	REWORK	SCRAP	/	VDI	~~SUPPORT~~ WEIGHTS	RELIAB. GROUP	~~GROUP~~ LEADER	STRESS GROUP	LIAISON ENGRG	PROJ ENGRG	~~GOVT~~

PRIORITY: C
DRAWING TITLE: DECK INSTALLATION ~ DESCENT STAGE ~ R.H. ~ LOWER
DRAWING NO.: LDW280-52541
EO NO.: C5

ISSUED BY A. Roger B. Stahl X1153 SECTION VDI GROUP NO. 335 PL 35

01
NAS 9-1100

LDW280-52543 A

MODEL OR END ITEM	NEXT ASSY	MODULE OR SER NO.	REQD PER MODULE OR END ITEM

PART NO.

GAEC SCH NO.

MODEL OR END ITEM	NEXT ASSY	MODULE OR SER NO.	REQD PER MODULE OR END ITEM

PART NO.

GAEC SCH NO.

MODEL OR END ITEM	NEXT ASSY	MODULE OR SER NO.	REQD PER MODULE OR END ITEM
LEM	LDW280-53509	LEM-3(33)	1
LEM	LDW280-52509	LEM-2(32)	1

PART NO. LDW280-52543-1

GAEC SCH NO. 50-2

✓

SH REV STATUS: FOR DESCRIPTION OF REV SEE SUBQ SH

SHEET	1.00	1.10	200	2.01	2.02	300	4.00		
REV	A	A	A		A	A	A		
SHEET									
REV									
SHEET									
REV									

LAST SECT LTR USED G-G

LAST DASH NO. USED - 3

GRUMMAN REL INFO A

PRIM NO.	VE(001)	6-17-6	
207	MP		X

UNLESS OTHERWISE SPECIFIED DIMENSIONS ARE IN INCHES.

TOLERANCE UNLESS SPECIFIED

FRACTIONS	DECIMALS	ANGLES
±1/16	±.020	±1/2

ORIG DWG AUTH

DETAIL SPEC REQUIREMENT

CLASS II ENGRG CHANGE

CLASS I ENGRG CHANGE

CONTRACT NO. NAS 9-1100

LINE ITEM 1

DOCUMENTATION TYPE II

DRAWN BY J Gardella 5-26-66

LAYOUT BY G. Hansmann ROC

CHECKED BY F 6-4-66

GR LEADER 6/10/66

YEH. DES INT 6/11

STRUCTURES EPS 6/15/66

STRUCTURES Hilderman 6/17

WEIGHTS W. G. Maudeas 6/21

RELIABILITY

PROJ ENGR R Plunkett 22 Jun 66

REL GROUP Bott 6-24-66

®

GRUMMAN AIRCRAFT ENGRG CORP
BETHPAGE, L. I., NEW YORK

DECK INSTALLATION
DESCENT STAGE-FWD-LOWER

SIZE B

CODE IDENT NO. 26512

LDW280-52543 A

SCALE NONE

SHEET 1.00 OF 7

ENG 77.1 12-65

01

NAS 9-1100

REVISIONS

FOR CONTINUATION OF REVISIONS SEE SHEET ______

CHANGE LTR	ITEM NO.	SHEET NO.	ZONE	GRUMMAN INFO ONLY	DET SPEC	CLASS I	CLASS II	ENGRG ORDER	DESCRIPTION	EFFECTIVITY	DISPOSITION OF EXISTING PARTS		CHANGED BY AND DATE	ENGRG APPD	GOVT APPD
											REWORK	SCRAP			
A	1	1.00,1.10, 2.00,3.00, & 4.00					✓	EO A1	IN FIELD & B/M ON-3 LDW280-17142-15 WAS LDW280-17142-11. (SHEET 1 OF 7 WAS 1 OF 6 ADDED SHEET 1.10).	LEM-2 LEM-3	✓		N. CIOFFI 8-24-66 S.J.		
	2	1.00, 2.02, 3.00 & 4.00							CHANGED COMMERCIAL CALLOUT TO G.A.E.C VENDOR APPROVED EQUIVALENT. DELETED Ⓑ NOTE 2 & 6; ADDED NOTE 10.	NOT REQD	NOT	REQD			

CHG APPROVED	LTR	GROUP LDR	VEC.DES INT	STRUCTURES	STRUCTURES	WEIGHTS	RELIABILITY					
	A											

GRUMMAN AIRCRAFT ENGRG CORP., BETHPAGE, L. I., NEW YORK

SIZE	CODE IDENT NO.		
B	26512	LDW280-52543	A

SCALE NONE SHEET 1.10

ENG 77.16 3-66

01

NAS 9-1100

QTY PER ASSEMBLY								CODE IDENT	PART NO.	I&T	NOMENCLATURE OR DESCRIPTION	MATERIAL	GOVT SPEC	COML SPEC	STOCK SIZE	PROCESS SYM	FINISH NO.	ZONE
					-3	-1												
					1			LDW280-17241 -20	E	ANGLE	SEE DWG						7A
					1			-19									6A
					1			-18									8A
					1			-17									6A
					1			-16									9A
					1			-15									5A
					1			-14									9B
					1			-13									5B
					1			-12									9C
					1			LDW280-17241-11		ANGLE							5C
					2			LDW280-17240 -17		ANGLE							5F
					1			-16									9D
					1			-15									5D
					1			-14									8E
					1			-13									5E
					1			-12									7F
					1			LDW280-17240-11		ANGLE							6F
					1			LDW280-17239-13		TEE							7A
					2			LDW280-17239-17		TEE							9C
					1			LDW280-17238-13		TEE							7B
					1			LDW280-17142-15		WEB	SEE DWG						8B
						1		LDW280-52543-3		PANEL ASSY					NONE	NONE	
								LDW280-52543-1	E	PANEL INSTL					NONE	NONE	

SYM OR NO.	PROCESS OR FINISH	GRUMMAN SPEC OR MILITARY SPEC	SYM OR NO.	PROCESS OR FINISH	GRUMMAN SPEC OR MILITARY SPEC	SYM OR NO.	PROCESS OR FINISH	GRUMMAN SPEC OR MILITARY SPEC

I & T: IDENTIFICATION AND TRACEABILITY IN ACCORDANCE WITH : NONE

GRUMMAN AIRCRAFT ENGRG CORP, BETHPAGE, L. I., NEW YORK

SIZE B | CODE IDENT NO. 26512 | LDW280-52543 | A

SCALE NONE | SHEET 2.00

ENG 77.2 7-65

01

NAS 9-1100

QTY PER ASSEMBLY		CODE IDENT	PART NO.	I&T	NOMENCLATURE OR DESCRIPTION	MATERIAL	GOVT SPEC	COML SPEC	STOCK SIZE	PROCESS SYM	FINISH NO.	ZONE
-3	-1											
	50		GN512H-08	E	NUT, COLLAR	GRUMMAN STD						
	15		GB511K-08-5		BOLT							
	16		GB511K-08-4		BOLT							
	19		GB511K-08-3		BOLT	GRUMMAN STD						
			MS20470DD5		RIVET	STD PART						
			MS20470DD4		RIVET							
			MS20426AD3		RIVET							
	2		NAS697C4		NUT							
	2		NAS654V4		BOLT							
	2		AN960D416L		WASHER	STD PART						
	1		GR500A-5M		RIVET	GRUMMAN STD						
	1		5L									
	6		5H									
	16		5G									
	45		5F									
	2		GR500A-5E	E	RIVET	GRUMMAN STD						

SYM OR NO.	PROCESS OR FINISH	GRUMMAN SPEC OR MILITARY SPEC	SYM OR NO.	PROCESS OR FINISH	GRUMMAN SPEC OR MILITARY SPEC	SYM OR NO.	PROCESS OR FINISH	GRUMMAN SPEC OR MILITARY SPEC

I & T: IDENTIFICATION AND TRACEABILITY IN ACCORDANCE WITH : NONE

GRUMMAN AIRCRAFT ENGRG CORP, BETHPAGE, L. I., NEW YORK

SIZE	CODE IDENT NO.		
B	26512	LDW280-52543	A

SCALE NONE

SHEET 202

ENG 77.2 7-65

01

NAS 9-1100

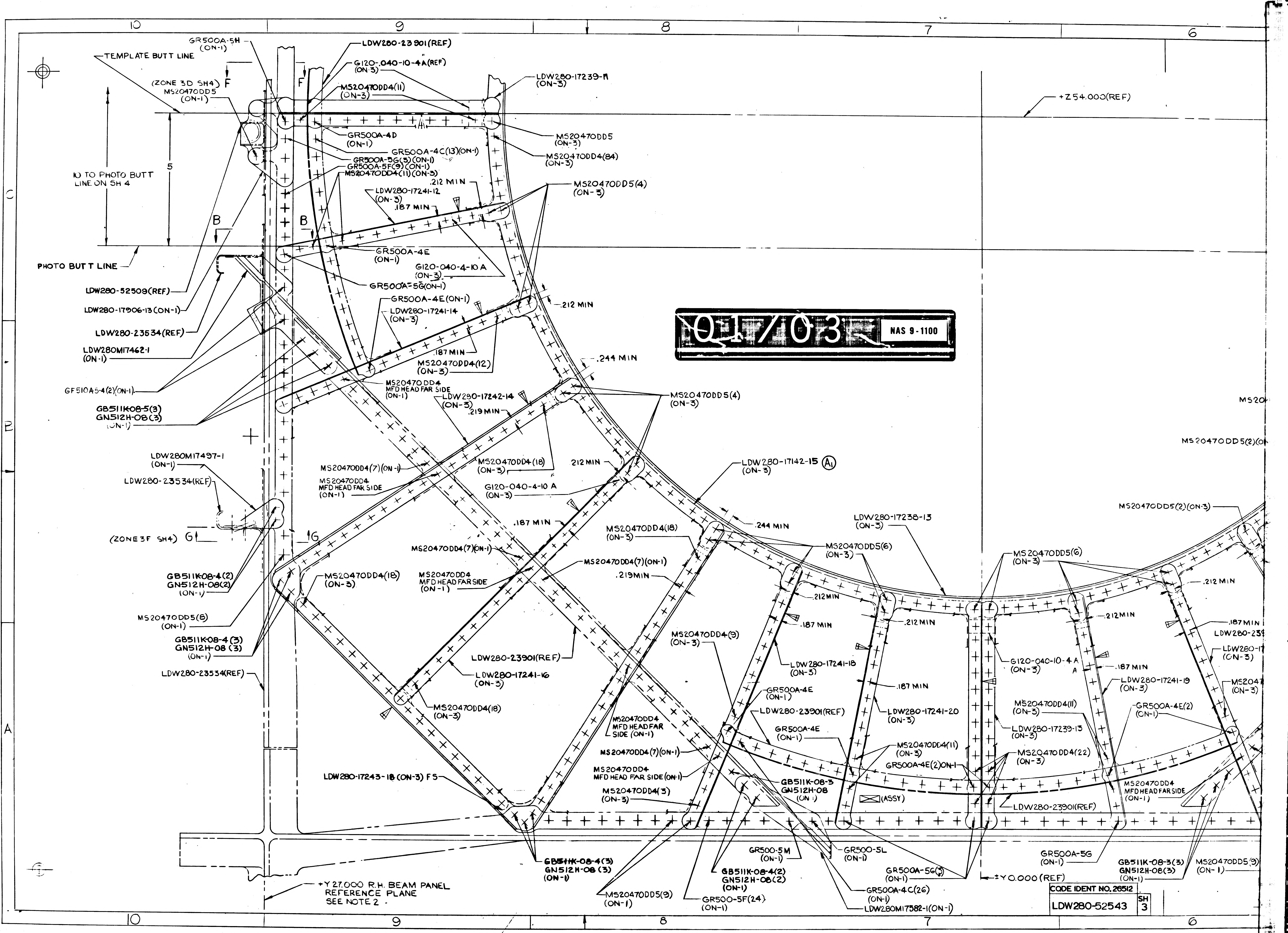
10
9
8
7
6
C
B
A
GR500A-5H (ON-1)
LDW280-23901(REF)
TEMPLATE BUTT LINE
G120-.040-10-4A(REF) (ON-3)
(ZONE 3D SH4) F
MS20470DD5 (ON-1)
F
MS20470DD4(11) (ON-3)
LDW280-17239-11 (ON-3)
+Z54.000(REF)
GR500A-4D (ON-1)
MS20470DD5 (ON-3)
GR500A-4C(13)(ON-1)
MS20470DD4(84) (ON-3)
GR500A-5G(3)(ON-1)
GR500A-5F(9)(ON-1)
MS20470DD4(11)(ON-3)
10 TO PHOTO BUTT LINE ON SH 4
5
.212 MIN
MS20470DD5(4) (ON-3)
LDW280-17241-12 (ON-3)
.187 MIN
B
B
GR500A-4E (ON-1)
PHOTO BUTT LINE
G120-040-4-10 A (ON-3)
GR500A-5G(ON-1)
LDW280-52509(REF)
LDW280-17906-13(ON-1)
GR500A-4E(ON-1)
LDW280-17241-14 (ON-3)
.212 MIN
LDW280-23534(REF)
LDW280M17462-1 (ON-1)
.187 MIN
MS20470DD4(12) (ON-3)
.244 MIN
GF510A5-4(2)(ON-1)
MS20470DD4 MFD HEAD FAR SIDE (ON-1)
LDW280-17242-14 (ON-3)
MS20470DD5(4) (ON-3)
GB511K-08-5(3)
GN512H-08(3)
(ON-1)
.219 MIN
LDW280M17497-1 (ON-1)
212 MIN
LDW280-23534(REF)
MS20470DD4(7)(ON-1)
MS20470DD4(18) (ON-3)
LDW280-17142-15 (A1) (ON-3)
MS20470DD4 MFD HEAD FAR SIDE (ON-1)
G120-040-4-10 A (ON-3)
(ZONE 3F SH4) G
G
.187 MIN
.244 MIN
MS20470DD4(18) (ON-3)
LDW280-17238-13 (ON-3)
MS20470DD5(2)(ON-3)
MS20470DD4(7)(ON-1)
MS20470DD5(6) (ON-3)
MS20470DD5(6) (ON-3)
MS20470DD4 MFD HEAD FAR SIDE (ON-1)
MS20470DD4(7)(ON-1)
GB511K-08-4(2)
GN512H-08(2)
(ON-1)
MS20470DD4(18) (ON-3)
.219 MIN
.212 MIN
.212 MIN
.212 MIN
.212 MIN
.187 MIN
MS20470DD5(8) (ON-1)
MS20470DD4(9) (ON-3)
.187 MIN
LDW280-17
GB511K-08-4(3)
GN512H-08(3)
(ON-1)
LDW280-23901(REF)
G120-040-10-4 A (ON-3)
.187 MIN
LDW280-17241-18 (ON-3)
LDW280-17241-16 (ON-3)
LDW280-17241-19 (ON-3)
LDW280-23534(REF)
.187 MIN
GR500A-4E (ON-1)
MS20470DD4(18) (ON-3)
MS20470DD4(11) (ON-3)
LDW280-17241-20 (ON-3)
GR500A-4E(2) (ON-1)
LDW280-23901(REF)
LDW280-17239-13 (ON-3)
GR500A-4E (ON-1)
MS20470DD4 MFD HEAD FAR SIDE (ON-1)
MS20470DD4(11) (ON-3)
MS20470DD4(22) (ON-3)
MS20470DD4(7)(ON-1)
GR500A-4E(2)ON-1
MS20470DD4 MFD HEAD FAR SIDE (ON-1)
MS20470DD4 MFD HEAD FAR SIDE (ON-1)
LDW280-17243-18 (ON-3) FS
GB511K-08-3
GN512H-08 (ON-1)
MS20470DD4(3) (ON-3)
(ASSY)
LDW280-23901(REF)
GR500-5M (ON-1)
GR500-5L (ON-1)
GR500A-5G (ON-1)
GB511K-08-3(3)
GN512H-08(3)
(ON-1)
MS20470DD5(9) (ON-1)
GB511K-08-4(3)
GN512H-08(3)
(ON-1)
GB511K-08-4(2)
GN512H-08(2)
(ON-1)
GR500A-5G(3) (ON-1)
+Y27.000 R.H. BEAM PANEL REFERENCE PLANE SEE NOTE 2
MS20470DD5(9) (ON-1)
GR500-5F(24) (ON-1)
GR500A-4C(26) (ON-1)
LDW280M17582-1(ON-1)
+Y0.000(REF)
MS20
MS20470DD5(2)(ON
3/3

01/03 NAS 9-1100

CODE IDENT NO. 26512	SH
LDW280-52543	3

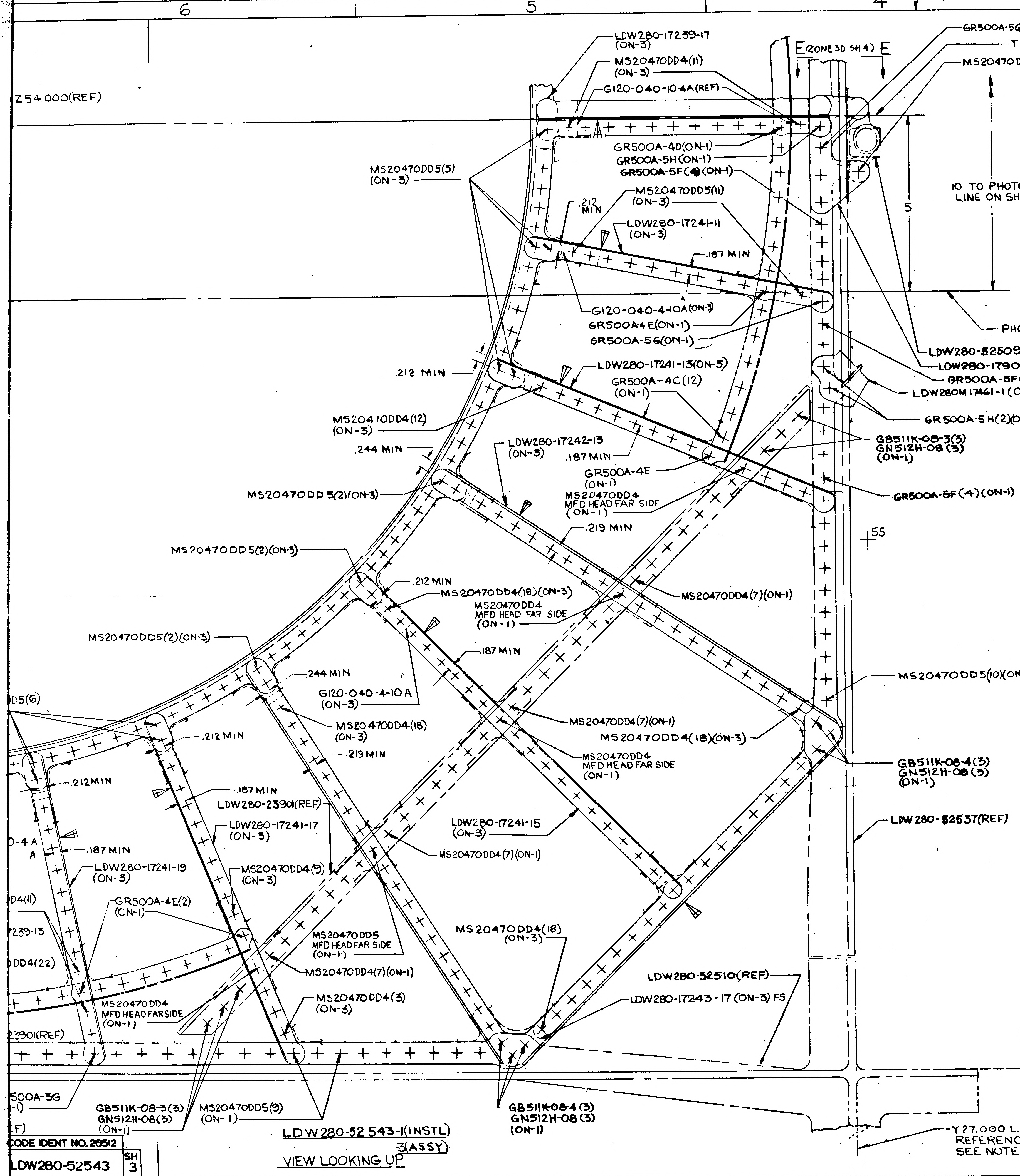
6
5
4
3
2
1
Z54.000(REF)
LDW280-17239-17 (ON-3)
MS20470DD4(11) (ON-3)
G120-040-10-4A(REF)
E(ZONE 3D SH 4) E
GR500A-5G(3)(ON-1)
TEMPLATE BUTT LINE
MS20470DD5 (ON-1)
GR500A-4D(ON-1)
GR500A-5H(ON-1)
GR500A-5F(4)(ON-1)
MS20470DD5(5) (ON-3)
MS20470DD5(11) (ON-3)
.212 MIN
LDW280-17241-11 (ON-3)
.187 MIN
10 TO PHOTO BUTT LINE ON SH4
5
PHOTO BUTT LINE
G120-040-4-10A(ON-3)
GR500A4E(ON-1)
GR500A-56(ON-1)
LDW280-52509(REF)
LDW280-17906-13 (ON-3)
GR500A-5F(2)(ON-1)
LDW280M17461-1(ON-1)
GR500A-5H(2)(ON-1)
.212 MIN
LDW280-17241-13(ON-3)
GR500A-4C(12) (ON-1)
MS20470DD4(12) (ON-3)
.244 MIN
LDW280-17242-13 (ON-3)
.187 MIN
GR500A-4E (ON-1)
GB511K-08-3(3) GN512H-08(3) (ON-1)
MS20470DD4 MFD HEAD FAR SIDE (ON-1)
GR500A-5F(4)(ON-1)
MS20470DD5(2)(ON-3)
.219 MIN
55
MS20470DD5(2)(ON-3)
.212 MIN
MS20470DD4(18)(ON-3)
MS20470DD4 MFD HEAD FAR SIDE (ON-1)
MS20470DD4(7)(ON-1)
.187 MIN
MS20470DD5(2)(ON-3)
.244 MIN
G120-040-4-10A (ON-3)
MS20470DD5(10)(ON-1)
DD5(6)
MS20470DD4(18) (ON-3)
.219 MIN
MS20470DD4(7)(ON-1)
MS20470DD4(18)(ON-3)
.212 MIN
.212MIN
MS20470DD4 MFD HEAD FAR SIDE (ON-1)
GB511K-08-4(3) GN512H-08(3) (ON-1)
.187MIN
LDW280-23901(REF)
LDW280-17241-17 (ON-3)
LDW280-52537(REF)
-4A A
.187 MIN
LDW280-17241-15 (ON-3)
LDW280-17241-19 (ON-3)
MS20470DD4(9) (ON-3)
MS20470DD4(7)(ON-1)
D4(11)
GR500A-4E(2) (ON-1)
7239-13
MS20470DD5 MFD HEAD FAR SIDE (ON-1)
MS20470DD4(18) (ON-3)
DD4(22)
MS20470DD4(7)(ON-1)
LDW280-52510(REF)
MS20470DD4 MFD HEAD FAR SIDE (ON-1)
MS20470DD4(3) (ON-3)
LDW280-17243-17 (ON-3) FS
23901(REF)
500A-5G -1)
GB511K-08-3(3) GN512H-08(3) (ON-1)
MS20470DD5(9) (ON-1)
GB511K-08-4(3) GN512H-08(3) (ON-1)
-Y 27.000 L.H. BEAM PANEL REFERENCE PLANE SEE NOTE 2
LF)
80
30

LDW280-52 543-1(INSTL)
-3(ASSY)
VIEW LOOKING UP

+Z 27.000 BEAM PANEL
REFERENCE PLANE
SEE NOTE 2

NOTES:
1. FOR BASIC JIG DATA SEE LDW280-23511.
2. ~~INSTALL FASTENERS PER LSP-14-15303 & LSP-14-15306~~
3. TOLERANCE ON LINES MARKED ◁ TO BE ± 1/32
4. SHIM AS REQD USING AL ALLOY QQ-A-250/5 ALCLAD 2024-T3 FINISH # 88
5. TOLERANCE ON LOFTED LOCATION OF FASTENERS THRU LDW280-17142-15 TO BE ± 1/32 OTHERS TO BE LOCATED FROM PILOT HOLES IN DETAIL PARTS.
6. ~~HI-LOK PINS & COLLARS TO BE IN ACCORDANCE WITH APPLICABLE PORTIONS OF MIL-N-25027 & NAS498~~
7. FASTENER MANUFACTURE HEAD (OTHER THAN CSK ATTACHMENTS) TO BE ON WEB SIDE UNLESS OTHERWISE SPECIFIED.
8. PERMISSIBLE OIL CAN DEPTH OF WEB BETWEEN STIFFENERS IS ± 1/32
9. INSTALL RIVETS WET WITH EPON 919 PER LSP14-14102 IN AREAS INDICATED
10. INSTALL GR500A, GF510A & GB511K PER LSP14-15303, LSP14-15304 & LSP14-15306.

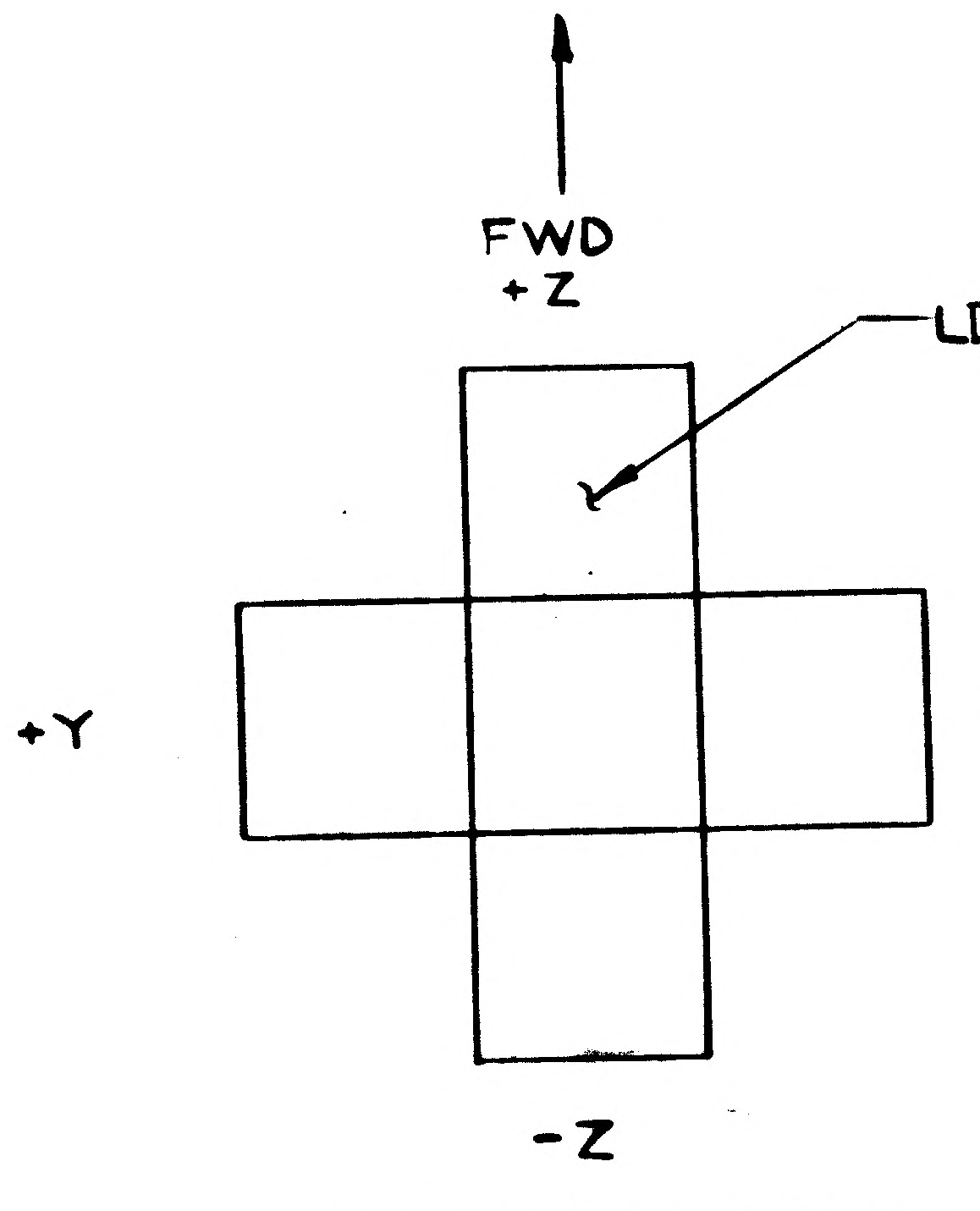
FWD
+Z
LDW280-52543-1(REF)
+Y
-Y
-Z

FOR ENGRG REF ONLY
NO SCALE
VIEW LOOKING UP

02/03 NAS 9-1100

MANUFAC
UNLESS
NOTES CHECK
RUBBER STAM
AND ALL OT
IN REGION
USE BOTH S
FILLET AND
RADII TOLER
.016R TO
.063R TO
OVER .250
DEPTH SHOW
HOLES IS F
BEYOND PER
EXTERNAL T
SHOWN INC
2 IMPERFEC
DO NOT CA
HOLES OR S
WITH DOUB
MISMATCH
PERMISSIBL
OF CUTTERS
INTERSECTI
DIAMETERS
MUST BE C
READING
HOLES MUS
CHROME PL
ALL DIMEN
AFTER CAD
THICKNESS
TO .0005 M
BE .0002 O
NO ALLOW
HOLES
125 SU
IN
PE
200 FO
REMOVE AL
BREAK ALL
INSPECTIO
MINIMUM
AVERAGE E
MARKED
DIA FR
SYMBOL
TO BE MA
UNLESS O
TOLERANC
LENGTHS
RIVETS SH
NOT SPEC
TOLERANC
DELINEAT
AS NOT

CODE IDENT NO. 26512	
LDW280-52543	SH 3

CODE IDENT NO. 26512	
LDW280-52543	SH 3

LEM
MODEL OR END ITEM

GRUMMAN AIRCRAFT ENGRG COR

SIZE	CODE IDENT NO	
J	26512	LDW2

SCALE

FOR PHOTO REPRODUCTION

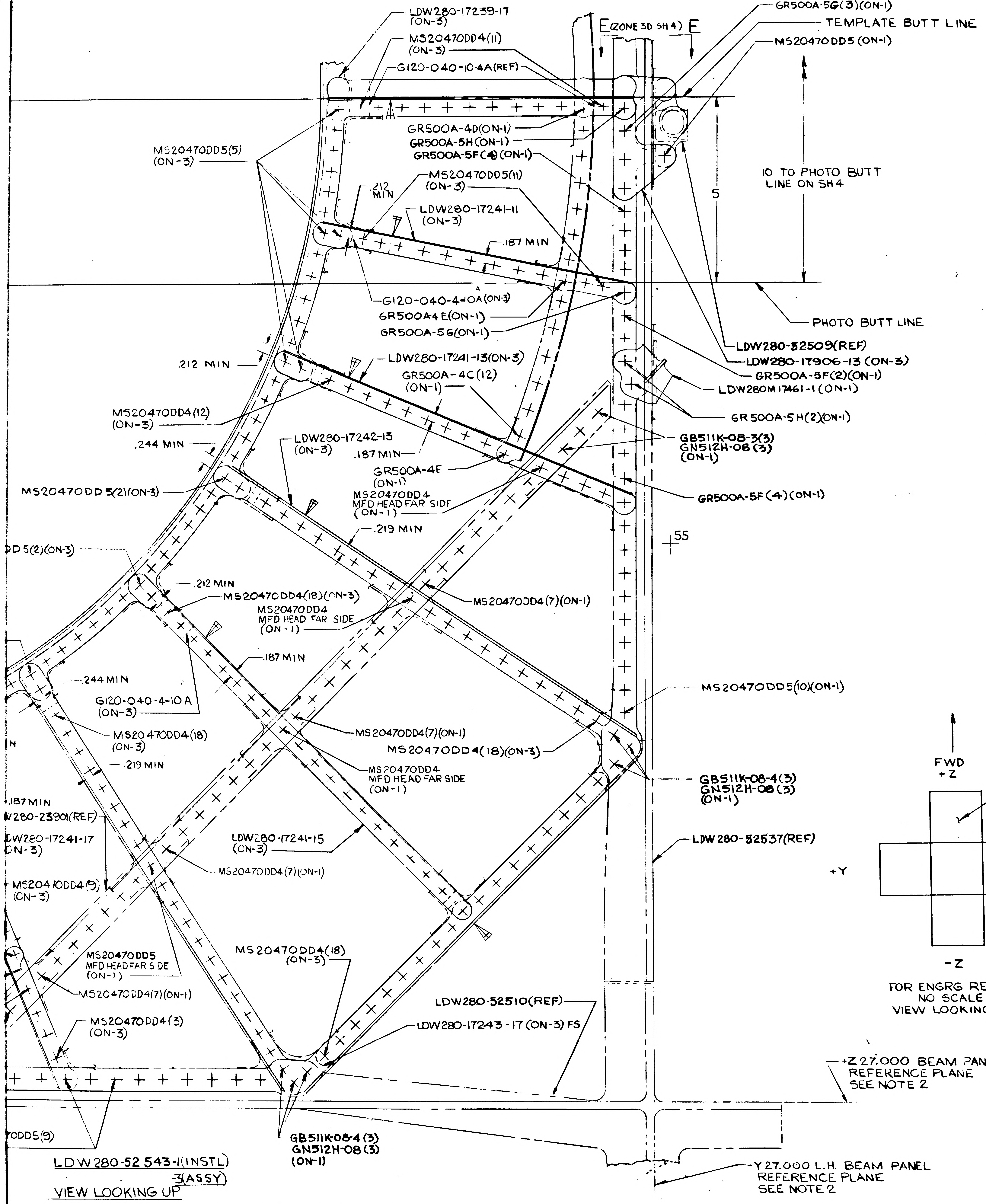
5
4
3
2
1
E (ZONE 3D SH 4) E
LDW280-17239-17 (ON-3)
MS20470DD4(11) (ON-3)
G120-040-10-4A(REF)
GR500A-5G(3)(ON-1)
TEMPLATE BUTT LINE
MS20470DD5 (ON-1)
MS20470DD5(5) (ON-3)
GR500A-4D(ON-1)
GR500A-5H(ON-1)
GR500A-5F(4)(ON-1)
.212 MIN
MS20470DD5(11) (ON-3)
LDW280-17241-11 (ON-3)
.187 MIN
10 TO PHOTO BUTT LINE ON SH4
5
G120-040-4-10A(ON-3)
GR500A-4E(ON-1)
GR500A-5G(ON-1)
PHOTO BUTT LINE
LDW280-52509(REF)
LDW280-17906-13 (ON-3)
GR500A-5F(2)(ON-1)
LDW280M17461-1 (ON-1)
.212 MIN
LDW280-17241-13(ON-3)
GR500A-4C(12) (ON-1)
GR500A-5H(2)(ON-1)
MS20470DD4(12) (ON-3)
.244 MIN
LDW280-17242-13 (ON-3)
.187 MIN
GB511K-08-3(3) GN512H-08(3) (ON-1)
GR500A-4E (ON-1)
MS20470DD4 MFD HEAD FAR SIDE (ON-1)
GR500A-5F(4)(ON-1)
MS20470DD5(2)(ON-3)
.219 MIN
55
DD5(2)(ON-3)
.212 MIN
MS20470DD4(18)(ON-3)
MS20470DD4 MFD HEAD FAR SIDE (ON-1)
MS20470DD4(7)(ON-1)
.187 MIN
MS20470DD5(10)(ON-1)
.244 MIN
G120-040-4-10A (ON-3)
MS20470DD4(18) (ON-3)
.219 MIN
MS20470DD4(7)(ON-1)
MS20470DD4(18)(ON-3)
MS20470DD4 MFD HEAD FAR SIDE (ON-1)
GB511K-08-4(3) GN512H-08(3) (ON-1)
.187 MIN
W280-23901(REF)
LDW280-17241-17 (ON-3)
LDW280-17241-15 (ON-3)
MS20470DD4(7)(ON-1)
LDW280-52537(REF)
MS20470DD4(9) (ON-3)
MS20470DD5 MFD HEAD FAR SIDE (ON-1)
MS20470DD4(18) (ON-3)
MS20470DD4(7)(ON-1)
MS20470DD4(3) (ON-3)
LDW280-52510(REF)
LDW280-17243-17 (ON-3) FS
+Z 27.000 BEAM PANEL REFERENCE PLANE SEE NOTE 2
ODD5(9)
GB511K-08-4(3) GN512H-08(3) (ON-1)
-Y 27.000 L.H. BEAM PANEL REFERENCE PLANE SEE NOTE 2

LDW280-52543-1(INSTL)
-3(ASSY)
VIEW LOOKING UP

80
30

NOTES:

1. FOR BASIC JIG DATA SEE LDW280-23511.
2. ~~INSTALL FASTENERS PER LSP-14-15303 & LSP-14-15306~~
3. TOLERANCE ON LINES MARKED ⊲ TO BE ± 1/32
4. SHIM AS REQD. USING AL ALLOY QQ-A-250/5 ALCLAD 2024-T3 FINISH # 88
5. TOLERANCE ON LOFTED LOCATION OF FASTENERS THRU LDW280-17142-15 TO BE ± 1/32 OTHERS TO BE LOCATED FROM PILOT HOLES IN DETAIL PARTS.
6. ~~HI-LOK PINS & COLLARS TO BE IN ACCORDANCE WITH APPLICABLE PORTIONS OF MIL-N-25027 & NAS498~~
7. FASTENER MANUFACTURE HEAD (OTHER THAN CSK ATTACHMENTS) TO BE ON WEB SIDE UNLESS OTHERWISE SPECIFIED.
8. PERMISSIBLE OIL CAN DEPTH OF WEB BETWEEN STIFFENERS IS ± 1/32
9. INSTALL RIVETS WET WITH EPON 919 PER LSP14-14102 IN AREAS INDICATED
10. INSTALL GR500A, GF510A & GB511K PER LSP14-15303, LSP14-15304 & LSP14-15306.

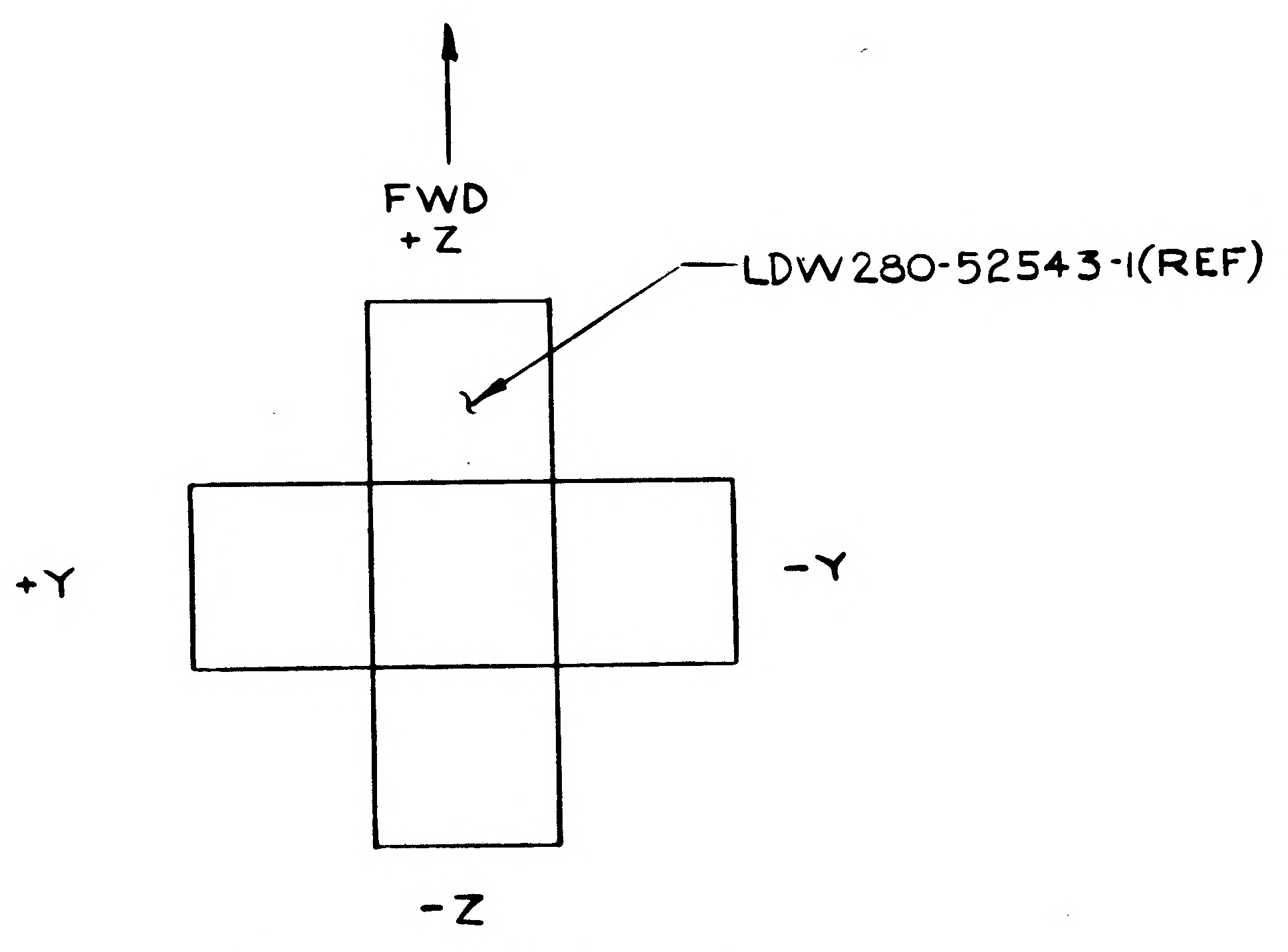
FWD
+Z
LDW280-52543-1(REF)
+Y
-Y
-Z

FOR ENGRG REF ONLY
NO SCALE
VIEW LOOKING UP

03X03 NAS 9-1100

MANUFACTURING OPERATIONS UNLESS OTHERWISE SPECIFIED NOTES CHECKED √ APPLY TO THIS DWG.	
RUBBER STAMP PART NUMBER AND ALL OTHER MARKINGS IN REGION MARKED ▭ USE BOTH SIDES IF NECESSARY.	✓
FILLET AND INSIDE CORNER RADII TOLERANCES .016R TO .062R ± .010 .063R TO .250R ± .015 OVER .250R ± .030	
DEPTH SHOWN FOR TAPPED HOLES IS FULL THDS. 2-3 IMP THDS. BEYOND PERMISSIBLE.	
EXTERNAL THREAD LENGTH SHOWN INCLUDES 2 IMPERFECT THREADS MAX.	
DO NOT CADMIUM PLATE & PAINT HOLES OR SURFACES MARKED WITH DOUBLE ASTERISK.	
MISMATCH STEP OF ± .005 PERMISSIBLE DUE TO CHANGE OF CUTTERS AT INSIDE INTERSECTING SURFACES.	
DIAMETERS MARKED MUST BE CONCENTRIC WITHIN FULL INDICATOR READING	
HOLES MUST BE KEPT FREE OF CHROME PLATING SOLUTION.	
ALL DIMENSIONS SHOWN TO BE MET AFTER CADMIUM PLATING. THICKNESS OF PLATE .0003 MIN. TO .0005 MAX. MIN. THICKNESS TO BE .0002 ON THREADED AREAS. NO ALLOWANCE FOR PLATING IN HOLES	
125 √ SURFACE ROUGHNESS INCLUDING REAMED HOLES PER MIL-STD-10	
200 √ FOR ALL DRILLED HOLES	
REMOVE ALL BURRS. BREAK ALL EDGES .015-.031	
INSPECTION INFORMATION MINIMUM PERMISSIBLE AVERAGE EDGE DISTANCE MARKED IS 1½ FASTENER DIA FROM FASTENER ℄	✓
SYMBOL ƒ DENOTES SURFACE TO BE MACHINED	
UNLESS OTHERWISE SPECIFIED TOLERANCE ON FLANGES IS ± 1/32	
LENGTHS OF AN, NAS & MS AL ALY RIVETS SHORTER THAN 1 INCH ARE NOT SPECIFIED.	
TOLERANCE ON LOFTED DELINEATIONS IS ± 1/16 EXCEPT AS NOTED	✓

DWG SIZE 34 X 94
PRINTING INFO ONLY
FULL SIZE SHEET AREA (36 X 96) = 24.00 SQ FT
1/2 SIZE SHEET AREA (1/4 OF FULL) = 6.00 SQ FT
PRINT TRIM LINE

C
B
A

LDW280-52543 A
LDW280-52543 A

LEM
MODEL OR END ITEM

CODE IDENT NO. 26512
LDW280-52543 SH 3

GRUMMAN AIRCRAFT ENGRG CORP., BETHPAGE, L. I., NEW YORK

SIZE	CODE IDENT NO		
J	26512	LDW280-52543	A
SCALE		SHEET 3 00	

FOR PHOTO REPRODUCTION

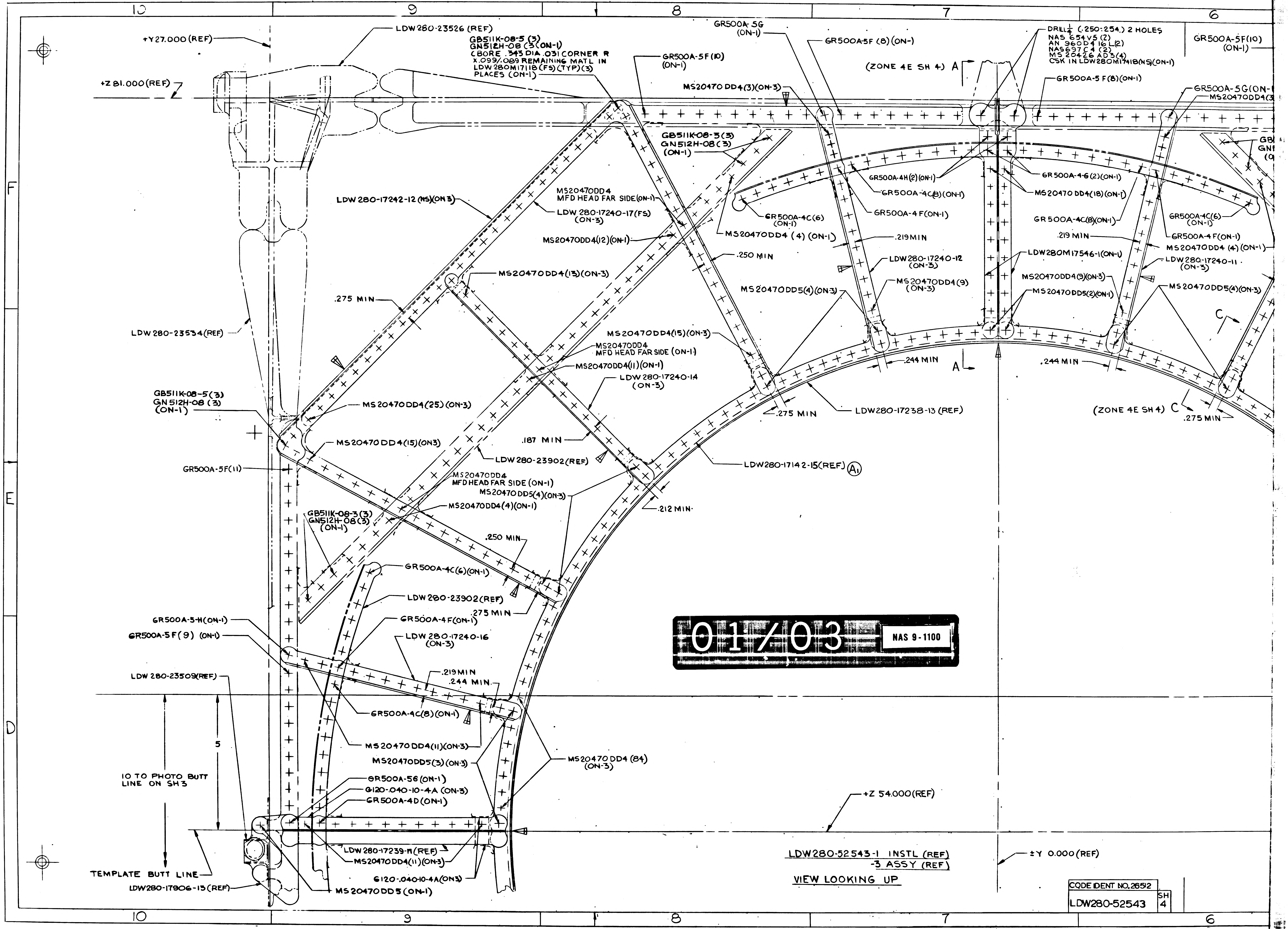
10
9
8
7
6
F
E
D
+Y27.000 (REF)
LDW 280-23526 (REF)
+Z 81.000 (REF)
GB511K-08-5 (3)
GN512H-08 (3) (ON-1)
CBORE .343 DIA .031 CORNER R
X .099/.089 REMAINING MATL IN
LDW 280M17118 (FS) (TYP) (3)
PLACES (ON-1)
GR500A-5G (ON-1)
GR500A-5F (10) (ON-1)
GR500A-5F (8) (ON-)
MS20470 DD4 (3) (ON-3)
(ZONE 4E SH 4) A
DRILL (.250-.254) 2 HOLES
NAS 654V5 (2)
AN 960D416L (2)
NAS697C4 (2)
MS 20426 AD3 (4)
CSK IN LDW280M17418 (NS) (ON-1)
GR500A-5 F (8) (ON-1)
GR500A-5F (10) (ON-1)
GR500A-5G (ON-
MS20470DD4 (3
GB511K-08-3 (3)
GN512H-08 (3)
(ON-1)
GR500A-4H (2) (ON-1)
GR500A-4C (8) (ON-1)
GR500A-4F (ON-1)
GR500A-4-6 (2) (ON-1)
MS20470 DD4 (18) (ON-1)
LDW 280-17242-12 (NS) (ON 3)
MS20470DD4
MFD HEAD FAR SIDE (ON-1)
LDW 280-17240-17 (FS)
(ON-3)
GR500A-4C (6)
(ON-1)
MS20470DD4 (4) (ON-1)
MS20470DD4 (12) (ON-1)
GR 500A-4C (8) (ON-1)
GR500A-4C (6)
(ON-1)
GR500A-4F (ON-1)
.219 MIN
MS20470DD4 (4) (ON-1)
.219 MIN
.250 MIN
LDW 280-17240-12
(ON-3)
LDW280M17546-1 (ON-1)
LDW 280-17240-11
(ON-3)
MS20470DD4 (13) (ON-3)
MS20470DD4 (9)
(ON-3)
MS20470DD4 (9) (ON-3)
MS20470DD5 (4) (ON-3)
MS20470DD5 (2) (ON-1)
MS20470DD5 (4) (ON-3)
.275 MIN
C
LDW 280-23534 (REF)
MS20470DD4 (15) (ON-3)
MS20470DD4
MFD HEAD FAR SIDE (ON-1)
MS20470DD4 (11) (ON-1)
.244 MIN
A
.244 MIN
LDW 280-17240-14
(ON-3)
GB511K-08-5 (3)
GN 512H-08 (3)
(ON-1)
MS 20470 DD4 (25) (ON-3)
.275 MIN
LDW280-17238-13 (REF)
(ZONE 4E SH 4) C
.275 MIN
MS20470 DD4 (15) (ON 3)
.187 MIN
LDW 280-23902 (REF)
GR500A-5F (11)
LDW280-17142-15 (REF) A1
MS20470DD4
MFD HEAD FAR SIDE (ON-1)
MS20470DD5 (4) (ON-3)
.212 MIN
MS20470DD4 (4) (ON-1)
GB511K-08-3 (3)
GN512H-08 (3)
(ON-1)
.250 MIN
GR500A-4C (6) (ON-1)
LDW 280-23902 (REF)
.275 MIN
GR500A-5-H (ON-1)
GR500A-4F (ON-1)
GR500A-5 F (9) (ON-1)
LDW 280-17240-16
(ON-3)
.219 MIN
.244 MIN.
LDW 280-23509 (REF)
GR500A-4C (8) (ON-1)
5
MS 20470 DD4 (11) (ON-3)
MS20470DD5 (3) (ON-3)
MS20470 DD4 (84)
(ON-3)
10 TO PHOTO BUTT
LINE ON SH 3
GR500A-5G (ON-1)
G120-.040-10-4A (ON-3)
GR500A-4D (ON-1)
+Z 54.000 (REF)
TEMPLATE BUTT LINE
LDW 280-17239-11 (REF)
MS20470DD4 (11) (ON-3)
LDW280-17906-13 (REF)
G120-.040-10-4A (ON 3)
MS 20470 DD5 (ON-1)
±Y 0.000 (REF)
10
9
8
7
6

01/03 NAS 9-1100

LDW280-52543-1 INSTL (REF)
-3 ASSY (REF)

VIEW LOOKING UP

CODE IDENT NO. 26512	SH
LDW280-52543	4

3/3

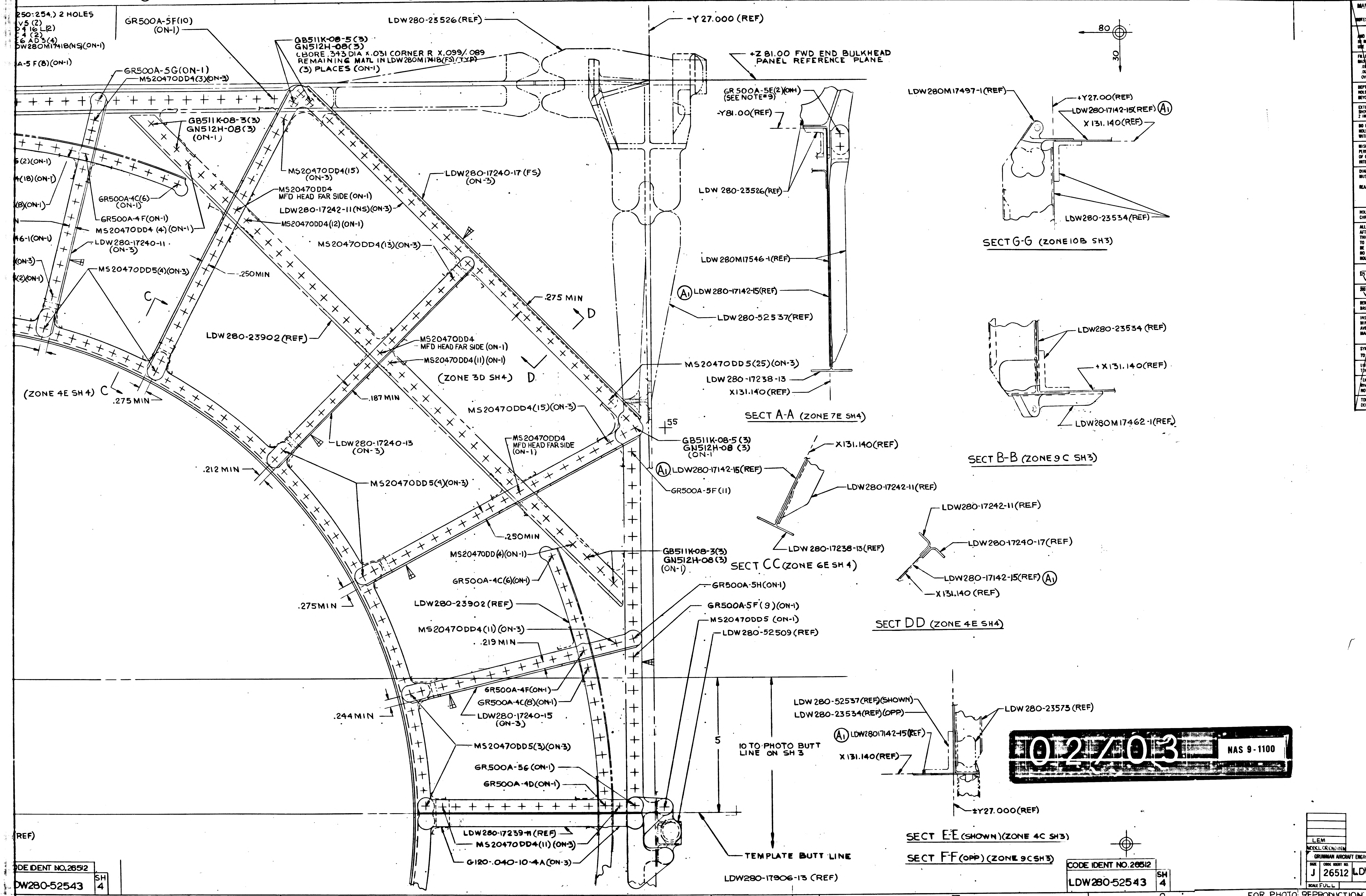

250:254.) 2 HOLES
V5 (2)
D4 16 L(2)
4 (2)
E6 AD3(4)
DW280M17418(NS)(ON-1)
A-5F(8)(ON-1)
GR500A-5F(10)
(ON-1)
GR500A-5G(ON-1)
MS20470DD4(3)(ON-3)
LDW280-23526(REF)
GB511K-08-5(3)
GN512H-08(3)
CBORE .343 DIA x .031 CORNER R X.099/.089
REMAINING MATL IN LDW280M17418(FS)(TYP)
(3) PLACES (ON-1)
-Y 27.000 (REF)
+Z 81.00 FWD END BULKHEAD
PANEL REFERENCE PLANE
GB511K-08-3(3)
GN512H-08(3)
(ON-1)
GR500A-5E(2)(ON-1)
(SEE NOTE 9)
-Y81.00(REF)
5(2)(ON-1)
4(18)(ON-1)
(8)(ON-1)
N
46-1(ON-1)
(ON-3)
5(2)(ON-1)
GR500A-4C(6)
(ON-1)
GR500A-4F(ON-1)
MS20470DD4 (4)(ON-1)
LDW280-17240-11
(ON-3)
MS20470DD5(4)(ON-3)
MS20470DD4(15)
(ON-3)
MS20470DD4
MFD HEAD FAR SIDE (ON-1)
LDW280-17242-11(NS)(ON-3)
MS20470DD4(12)(ON-1)
LDW280-17240-17 (FS)
(ON-3)
MS20470DD4(13)(ON-3)
LDW 280-23526(REF)
LDW 280M17546-1(REF)
.250MIN
C
.275 MIN
D
A1 LDW280-17142-15(REF)
LDW280-52537(REF)
LDW280-23902(REF)
MS20470DD4
MFD HEAD FAR SIDE (ON-1)
MS20470DD4(11)(ON-1)
(ZONE 3D SH4)
D
MS20470DD5(25)(ON-3)
LDW 280-17238-13
X131.140(REF)
(ZONE 4E SH4)
C
.275 MIN
.187 MIN
MS20470DD4(15)(ON-3)
SECT A-A (ZONE 7E SH4)
55
LDW280-17240-13
(ON-3)
MS20470DD4
MFD HEAD FAR SIDE
(ON-1)
GB511K-08-5(3)
GN512H-08 (3)
(ON-1)
A1 LDW280-17142-15(REF)
GR500A-5F(11)
.212 MIN
MS20470DD5(4)(ON-3)
X131.140(REF)
LDW280-17242-11(REF)
LDW 280-17238-13(REF)
SECT CC (ZONE 6E SH 4)
.250MIN
MS20470DD(4)(ON-1)
GR500A-4C(6)(ON-1)
GB511K-08-3(3)
GN512H-08(3)
(ON-1)
GR500A-5H(ON-1)
GR500A-5F(9)(ON-1)
MS20470DD5 (ON-1)
LDW280-52509 (REF)
.275MIN
LDW280-23902(REF)
MS20470DD4(11)(ON-3)
.219 MIN
GR500A-4F(ON-1)
GR500A-4C(8)(ON-1)
LDW280-17240-15
(ON-3)
.244 MIN
MS20470DD5(3)(ON-3)
GR500A-56 (ON-1)
GR500A-4D(ON-1)
10 TO PHOTO BUTT
LINE ON SH 3
5
LDW280-17239-11 (REF)
MS20470DD4(11)(ON-3)
G120-.040-10-4A(ON-3)
TEMPLATE BUTT LINE
LDW280-17906-13 (REF)
(REF)
80
30
LDW280M17497-1(REF)
+Y27.00(REF)
LDW280-17142-15(REF) A1
X 131.140(REF)
LDW280-23534(REF)
SECT G-G (ZONE 10B SH3)
LDW280-23534 (REF)
+X131.140(REF)
LDW280M17462-1(REF)
SECT B-B (ZONE 9C SH3)
LDW280-17242-11(REF)
LDW280-17240-17(REF)
LDW280-17142-15(REF) A1
X131.140 (REF)
SECT DD (ZONE 4E SH4)
LDW 280-52537(REF)(SHOWN)
LDW 280-23534(REF)(OPP)
A1 LDW280-17142-15(REF)
X131.140(REF)
LDW 280-23573 (REF)
±Y27.000(REF)
SECT E-E (SHOWN)(ZONE 4C SH3)
SECT F-F (OPP) (ZONE 9C SH3)
6
5
4
3
2
1

02/03 NAS 9-1100

CODE IDENT NO. 26512
LDW280-52543 SH 4

LEM
MODEL OR END ITEM
GRUMMAN AIRCRAFT ENGR
J 26512 LD
SCALE FULL

FOR PHOTO REPRODUCTION

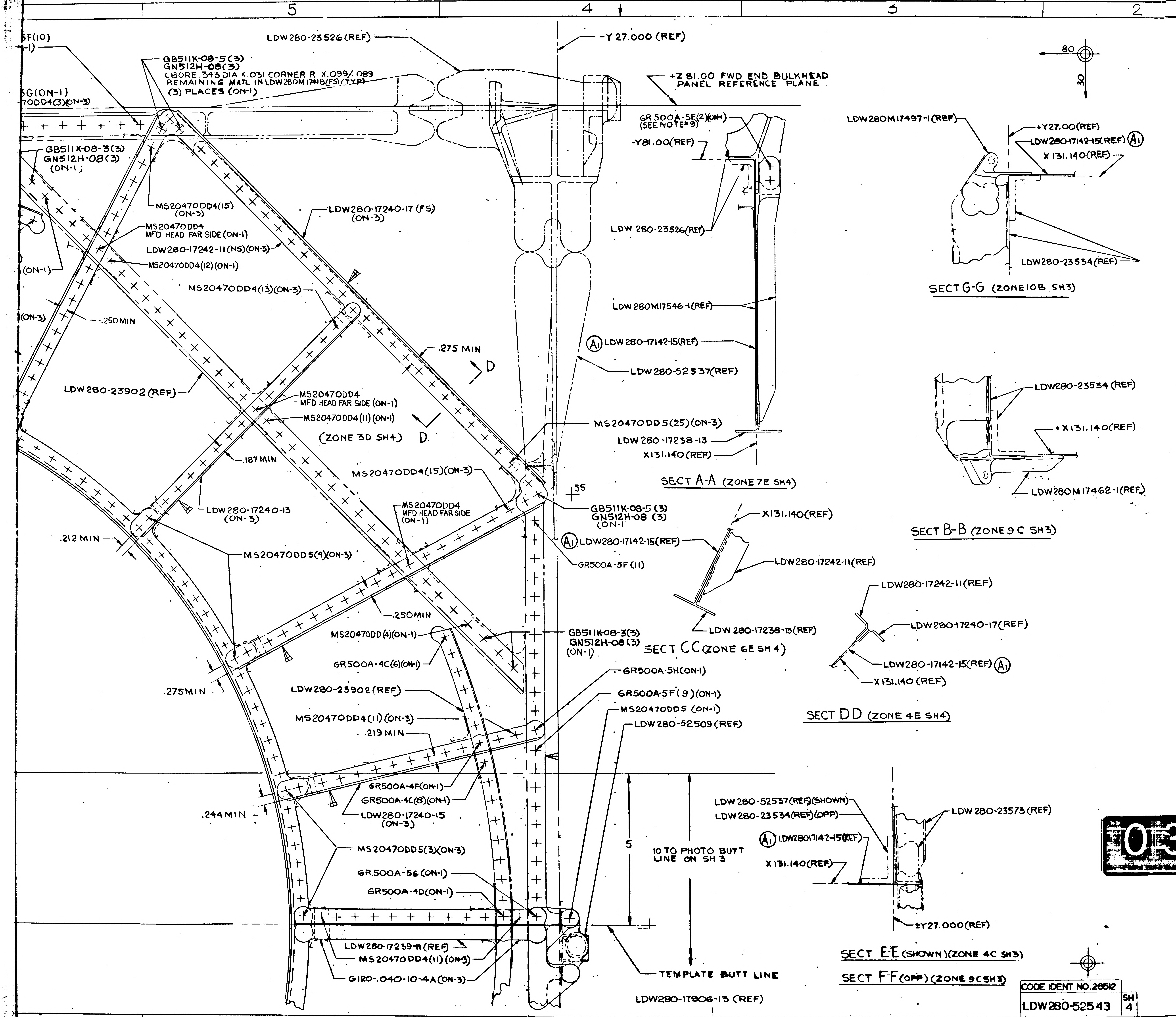

5
4
3
2
1
5F(10)
-1)
5G(ON-1)
70DD4(3)(ON-3)
LDW280-23526(REF)
-Y 27.000 (REF)
GB511K-08-5(3)
GN512H-08(3)
C BORE .343 DIA x .031 CORNER R x .099/.089
REMAINING MATL IN LDW280M17418(FS)(TYP)
(3) PLACES (ON-1)
+Z 81.00 FWD END BULKHEAD
PANEL REFERENCE PLANE
80
30
GB511K-08-3(3)
GN512H-08(3)
(ON-1)
GR 500A-5E(2)(ON-1)
(SEE NOTE #9)
-Y81.00(REF)
LDW280M17497-1(REF)
+Y27.00(REF)
LDW280-17142-15(REF) A1
X 131.140(REF)
MS20470DD4(15)
(ON-3)
LDW280-17240-17 (FS)
(ON-3)
MS20470DD4
MFD HEAD FAR SIDE (ON-1)
LDW280-17242-11(NS)(ON-3)
MS20470DD4(12)(ON-1)
(ON-1)
LDW 280-23526(REF)
LDW280-23534(REF)
SECT G-G (ZONE 10B SH3)
MS20470DD4(13)(ON-3)
(ON-3)
.250 MIN
LDW 280M17546-1(REF)
A1 LDW280-17142-15(REF)
.275 MIN
D
LDW 280-52537(REF)
LDW280-23902(REF)
MS20470DD4
MFD HEAD FAR SIDE (ON-1)
MS20470DD4(11)(ON-1)
(ZONE 3D SH4)
D
LDW280-23534 (REF)
MS20470DD5(25)(ON-3)
LDW 280-17238-13
X131.140 (REF)
+X131.140(REF)
.187 MIN
MS20470DD4(15)(ON-3)
LDW280M17462-1(REF)
SECT A-A (ZONE 7E SH4)
55
LDW280-17240-13
(ON-3)
MS20470DD4
MFD HEAD FAR SIDE
(ON-1)
GB511K-08-5(3)
GN512H-08(3)
(ON-1)
SECT B-B (ZONE 9 C SH3)
X131.140(REF)
.212 MIN
A1 LDW280-17142-15(REF)
MS20470DD5(4)(ON-3)
GR500A-5F(11)
LDW280-17242-11(REF)
LDW280-17242-11(REF)
.250 MIN
LDW280-17240-17(REF)
MS20470DD(4)(ON-1)
GB511K08-3(3)
GN512H-08(3)
(ON-1)
LDW 280-17238-13(REF)
SECT CC (ZONE 6E SH 4)
GR500A-4C(6)(ON-1)
GR500A-5H(ON-1)
LDW280-17142-15(REF) A1
X131.140 (REF)
.275 MIN
LDW280-23902 (REF)
GR500A-5F(9)(ON-1)
MS20470DD5 (ON-1)
MS20470DD4(11) (ON-3)
LDW 280-52509 (REF)
SECT DD (ZONE 4E SH4)
.219 MIN
GR500A-4F(ON-1)
GR500A-4C(8)(ON-1)
LDW280-17240-15
(ON-3)
LDW 280-52537(REF)(SHOWN)
LDW 280-23534(REF)(OPP)
LDW 280-23573 (REF)
.244 MIN
A1 LDW28017142-15(REF)
MS20470DD5(3)(ON-3)
5
10 TO PHOTO BUTT
LINE ON SH 3
X 131.140(REF)
GR500A-56 (ON-1)
GR500A-4D(ON-1)
±Y27.000(REF)
LDW280-17239-11 (REF)
MS20470DD4(11)(ON-3)
SECT E-E (SHOWN)(ZONE 4C SH3)
G120-.040-10-4A(ON-3)
TEMPLATE BUTT LINE
SECT F-F (OPP) (ZONE 9C SH3)
LDW280-17906-13 (REF)

03/03

NAS 9-1100

LDW280-52543 A

LDW280-52543 A

MANUFACTURING OPERATIONS
UNLESS OTHERWISE SPECIFIED
NOTES CHECKED ✓ APPLY TO THIS DWG.

PART NUMBER
AND ALL OTHER MARKINGS
IN REGION MARKED ☒
USE BOTH SIDES IF NECESSARY.

FILLET AND INSIDE CORNER
RADII TOLERANCES
.016R TO .062R ± .008
.063R TO .250R ± .015
OVER .250R ± .030

DEPTH SHOWN FOR TAPPED
HOLES IS FULL THDS. 2-3 IMP THDS.
BEYOND PERMISSIBLE.

EXTERNAL THREAD LENGTH
SHOWN INCLUDES
2 IMPERFECT THREADS MAX.

DO NOT CADMIUM PLATE & PAINT
HOLES OR SURFACES MARKED
WITH DOUBLE ASTERISK.

MISMATCH STEP OF ± .005
PERMISSIBLE DUE TO CHANGE
OF CUTTERS AT INSIDE
INTERSECTING SURFACES.

DIAMETERS MARKED
MUST BE CONCENTRIC WITHIN
FULL INDICATOR
READING

HOLES MUST BE KEPT FREE OF
CHROME PLATING SOLUTION.

ALL DIMENSIONS SHOWN TO BE MET
AFTER CADMIUM PLATING.
THICKNESS OF PLATE .0003 MIN.
TO .0005 MAX. MIN. THICKNESS TO
BE .0002 ON THREADED AREAS.
NO ALLOWANCE FOR PLATING IN
HOLES

125 √ SURFACE ROUGHNESS
INCLUDING REAMED HOLES
PER MIL-STD-10

200 √ FOR ALL DRILLED HOLES

REMOVE ALL BURRS.
BREAK ALL EDGES .015-.031

INSPECTION INFORMATION
MINIMUM PERMISSIBLE
AVERAGE EDGE DISTANCE
MARKED IS

SYMBOL √ DENOTES SURFACE
TO BE MACHINED

UNLESS OTHERWISE SPECIFIED
TOLERANCE ON FLANGES IS ± 1/32

LENGTHS OF AN, NAS & MS AL ALY
RIVETS SHORTER THAN 1 INCH ARE
NOT SPECIFIED.

TOLERANCE ON LOFTED
DELINEATIONS IS

DWG SIZE 36 X 94

PRINTING INFO ONLY
FULL SIZE SHEET AREA (36 x 96) = 24.0 SQ FT
½ SIZE SHEET AREA (¼ OF FULL) = 6.0 SQ FT

CODE IDENT NO. 26512	
LDW280-52543	SH 4

L.EM
MODEL OR END ITEM

GRUMMAN AIRCRAFT ENGRG CORP., BETHPAGE, L. I., NEW YORK

SIZE	CODE IDENT NO.		
J	26512	LDW280-52543	A
SCALE FULL		SHEET 4.00	

K2

FOR PHOTO REPRODUCTION

5625

QTY PER ASSEMBLY												
-3	-1	CODE IDENT	PART NO.	I&T	NOMENCLATURE OR DESCRIPTION	MATERIAL	GOVT SPEC	COML SPEC	STOCK SIZE	PROCESS SYM	FINISH NO.	ZONE
	2		GR500A - 4H	E	RIVET	GRUMMAN STD						
	2		4G									
	4		4F									
	8		4E									
	4		4D									
	108		GR500A - 4C		RIVET							
	2		GF510A-5-4		FASTENER							
5			G120-040-10-4A		SHIM							5D
2			G120-040-4-10A		SHIM	GRUMMAN STD						5B
	1		LDW280M17582-1		FITTING	SEE DWG						7A
	1		LDW280M17546-1		TEE							7F
	1		LDW280M17497-1		FITTING							10B
	1		LDW280M17462-1		FITTING							10B
	1		LDW280M17461-1		FITTING							4A
2			LDW280-17906-13		PLATE							4C
			LDW280-17243-18		ANGLE							8A
1			LDW280-17243-17		ANGLE							5A
1			LDW280-17243-14		ANGLE							9B
			LDW280-17242-13		ANGLE							5E
1			LDW280-17242-12		ANGLE							9F
1			LDW280-17242-11	E	ANGLE	SEE DWG						5F

SYM OR NO.	PROCESS OR FINISH	GRUMMAN SPEC OR MILITARY SPEC	SYM OR NO.	PROCESS OR FINISH	GRUMMAN SPEC OR MILITARY SPEC	SYM OR NO.	PROCESS OR FINISH	GRUMMAN SPEC OR MILITARY SPEC

I&T: IDENTIFICATION AND TRACEABILITY IN ACCORDANCE WITH : NONE

GRUMMAN AIRCRAFT ENGRG CORP, BETHPAGE, L. I., NEW YORK

SIZE	CODE IDENT NO.	
B	26512	LDW280-52543

SCALE NONE SHEET 2.01

ENG 77.2 7-65

01

NAS 9-1100

ENG 32.2 REV 3-65

THIS IS AN ORIGINAL E.O.

GRUMMAN AIRCRAFT ENGINEERING CORP.
CODE IDENT NO. 26512
ENGINEERING ORDER

DWG. NO. LDW 230-52543
EO NO. B2
CONTROL INFO NO. LDW280A 3610

Zone 9E.:
(VIEW ROTATED 180°)
(SH 4.00)

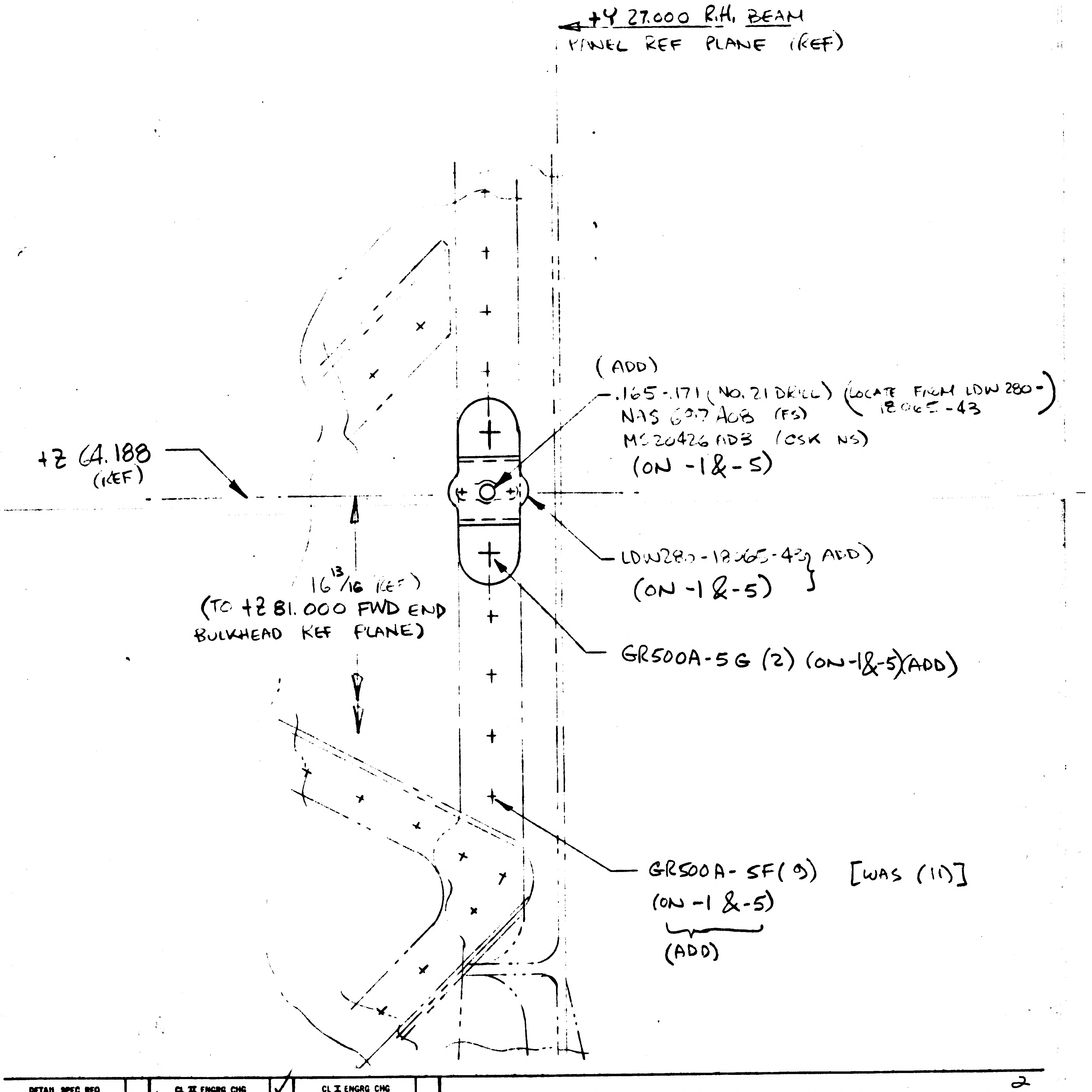

+Y 27.000 R.H. BEAM
PANEL REF PLANE (REF)
(ADD)
.165-.171 (NO. 21 DRILL) (LOCATE FROM LDW 280-18065-43)
NAS 697 A08 (FS)
MS 20426 AD3 (CSK NS)
(ON -1 & -5)
+Z 64.188 (REF)
LDW280-18065-43 (ADD)
(ON -1 & -5)
16 13/16 (REF)
(TO +Z 81.000 FWD END BULKHEAD REF PLANE)
GR500A-5G (2) (ON-1&-5)(ADD)
GR500A-5F(9) [WAS (11)]
(ON -1 & -5)
(ADD)

DETAIL SPEC REQ		CL II ENGRG CHG	✓	CL I ENGRG CHG		2

REASON FOR EO: TO ELIMINATE INTERFERENCE BETWEEN THERMAL SHIELD STRAP & BATTERY SUPTS

DESCRIPTION OF EO: ADDED LDW280-18065-43, NAS697A08 & MS20426AD3(2) & GR500A-5G(2) ON-1 & -5. GR500A-5F(9)(ON-1&-5) WAS (11)

GAEC EO RELEASE: AR 12/13/66

MODEL	PROCURING ACTIVITY NO.	GAEC UNIT NO.	SUB CONTR UNIT NO.
LM		LM-2 (32)	
LM		LM-3 (33)	

DRAWING CHANGE REQD		DISPOSITION OF PARTS	
REVISE DWG	RECORD EO	REWORK	SCRAP
✓		✓	

APPROVED BY	JAS				NJA			
DATE	12-2-66				12/6/66		12-6-66	12.12.66
1	VDI	SUPPORT WEIGHTS	RELIAB GROUP	GROUP LEADER	STRESS GROUP	LIAISON ENGRG	PROJ ENGRG	GOVT

PRIORITY	DRAWING TITLE	DRAWING NO.	EO NO.
C	DECK INSTALLATION ~ DESCENT STAGE ~ FORWARD ~ LOWER	LDW280-52543	B2

ISSUED BY A. KICHER / J. STRAVASCH X1153 SECTION VDI GROUP NO. 335 PL 35

01

NAS 9-1100

ENG 32.1 REV 3-65

GRUMMAN AIRCRAFT ENGINEERING CORP.
CODE IDENT NO. 26512

ENGINEERING ORDER

DWG. NO. LDW 28052543 EO NO. B3
CONTROL INFO NO. LDW 280B 4921

TO LIST OF MATERIALS ADD LDW 280 M 17461-1,
AND LDW 280 M 17462-1 ON LDW 280-52543-1
PANEL INSTL. - 1 EACH REQ'D

DETAIL SPEC REQ	✓	CL II ENGRG CHG		CL I ENGRG CHG		(5)

REASON FOR EO	DESCRIPTION OF EO	GAEC EO RELEASE
OMITTED IN ERROR	TO LIST OF MATERIAL ADD LDW 280 M 17461-1 & LDW 280 M 17462-1 FITTING	(R) 1C JK 8/9/68

MODEL	EFFECTIVITY: PROCURING ACTIVITY NO.	GAEC UNIT NO.	SUB CONTR UNIT NO.
LEM		LEM 2 (32)	
LEM		LEM 3 (33)	

DRAWING CHANGE REQD		DISPOSITION OF PARTS		APPROVED BY	JHS			G.L. [illegible]	NM	H.G. PROJ	[illegible]	[illegible]
✓		NOT REQD		DATE	7/29/68			7-29-68	8-1-68	KSC	8/1/68	8/8/68
REVISE DWG	RECORD EO	REWORK	SCRAP		VD1	SUPPORT	RELIAB. GROUP	GROUP LEADER	STRESS GROUP	LIAISON ENGRG	PROJ ENGRG	~~GOVT~~

PRIORITY	DRAWING TITLE	DRAWING NO.	EO NO.
C	DECK INSTALLATION DESCENT STAGE - FWD - LOWER	LDW 280-52543	B3

ISSUED BY ED MORRIS 86046 SECTION VD 1 GROUP NO. 355 PL 25

01

NAS 9-1100

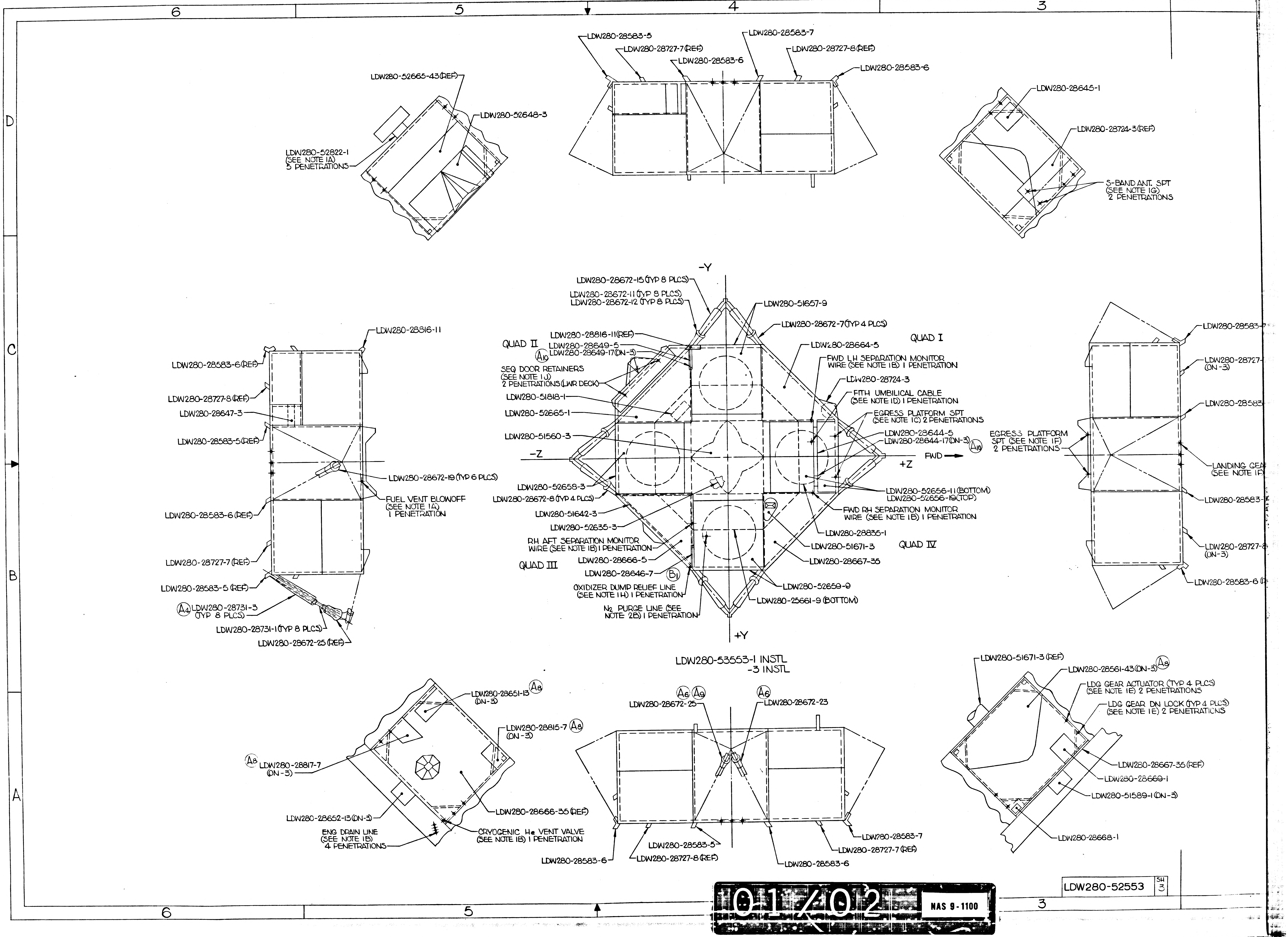
6
5
4
3
D
C
B
A
LDW280-28583-5
LDW280-28583-7
LDW280-28727-7(REF)
LDW280-28727-8(REF)
LDW280-28583-6
LDW280-28583-6
LDW280-52665-43(REF)
LDW280-52648-3
LDW280-52822-1
(SEE NOTE 1A)
5 PENETRATIONS
LDW280-28645-1
LDW280-28724-3(REF)
S-BAND ANT. SPT
(SEE NOTE 1G)
2 PENETRATIONS
-Y
LDW280-28672-15(TYP 8 PLCS)
LDW280-28672-11(TYP 8 PLCS)
LDW280-28672-12(TYP 8 PLCS)
LDW280-51657-9
LDW280-28672-7(TYP 4 PLCS)
LDW280-28816-11(REF)
QUAD II
LDW280-28649-5
A10 LDW280-28649-17(ON-3)
SEQ DOOR RETAINERS
(SEE NOTE 1J)
2 PENETRATIONS(LWR DECK)
LDW280-51818-1
LDW280-52665-1
LDW280-51560-3
-Z
LDW280-52658-3
LDW280-28672-8(TYP 4 PLCS)
LDW280-51642-3
LDW280-52635-3
RH AFT SEPARATION MONITOR
WIRE(SEE NOTE 1B) 1 PENETRATION
QUAD III
LDW280-28666-5
LDW280-28646-7
B1
OXIDIZER DUMP RELIEF LINE
(SEE NOTE 1H) 1 PENETRATION
N2 PURGE LINE (SEE
NOTE 2B) 1 PENETRATION
+Y
QUAD I
LDW280-28664-5
FWD LH SEPARATION MONITOR
WIRE (SEE NOTE 1B) 1 PENETRATION
LDW280-28724-3
FITH UMBILICAL CABLE
(SEE NOTE 1D) 1 PENETRATION
EGRESS PLATFORM SPT
(SEE NOTE 1C) 2 PENETRATIONS
LDW280-28644-5
LDW280-28644-17(ON-3)
A10
FWD
+Z
LDW280-52656-11(BOTTOM)
LDW280-52656-19(TOP)
FWD RH SEPARATION MONITOR
WIRE (SEE NOTE 1B) 1 PENETRATION
LDW280-28835-1
LDW280-51671-3
QUAD IV
LDW280-28667-35
LDW280-52659-9
LDW280-25661-9(BOTTOM)
LDW280-28816-11
LDW280-28583-6(REF)
LDW280-28727-8(REF)
LDW280-28647-3
LDW280-28583-5(REF)
LDW280-28672-19(TYP 6 PLCS)
FUEL VENT BLOWOFF
(SEE NOTE 1A)
1 PENETRATION
LDW280-28583-6(REF)
LDW280-28727-7(REF)
LDW280-28583-5(REF)
A4 LDW280-28731-3
(TYP 8 PLCS)
LDW280-28731-1(TYP 8 PLCS)
LDW280-28672-25(REF)
EGRESS PLATFORM
SPT (SEE NOTE 1F)
2 PENETRATIONS
LDW280-28583-
LDW280-28727-
(ON-3)
LDW280-28583
LANDING GEA
(SEE NOTE 1F
LDW280-28583-
LDW280-28727-
(ON-3)
LDW280-28583-6
LDW280-53553-1 INSTL
-3 INSTL
LDW280-28651-13 A8
(ON-3)
LDW280-28815-7 A8
(ON-3)
A8 LDW280-28817-7
(ON-3)
LDW280-28666-35(REF)
LDW280-28652-13(ON-3)
ENG DRAIN LINE
(SEE NOTE 1B)
4 PENETRATIONS
CRYOGENIC He VENT VALVE
(SEE NOTE 1B) 1 PENETRATION
A6 A9
LDW280-28672-25
A6
LDW280-28672-23
LDW280-28583-6
LDW280-28583-5
LDW280-28727-8(REF)
LDW280-28583-6
LDW280-28583-7
LDW280-28727-7(REF)
LDW280-51671-3(REF)
LDW280-28561-43(ON-3) A8
LDG GEAR ACTUATOR (TYP 4 PLCS)
(SEE NOTE 1E) 2 PENETRATIONS
LDG GEAR DN LOCK (TYP 4 PLCS)
(SEE NOTE 1E) 2 PENETRATIONS
LDW280-28667-35(REF)
LDW280-28669-1
LDW280-51589-1(ON-3)
LDW280-28668-1

01/02

NAS 9-1100

LDW280-52553 SH 3

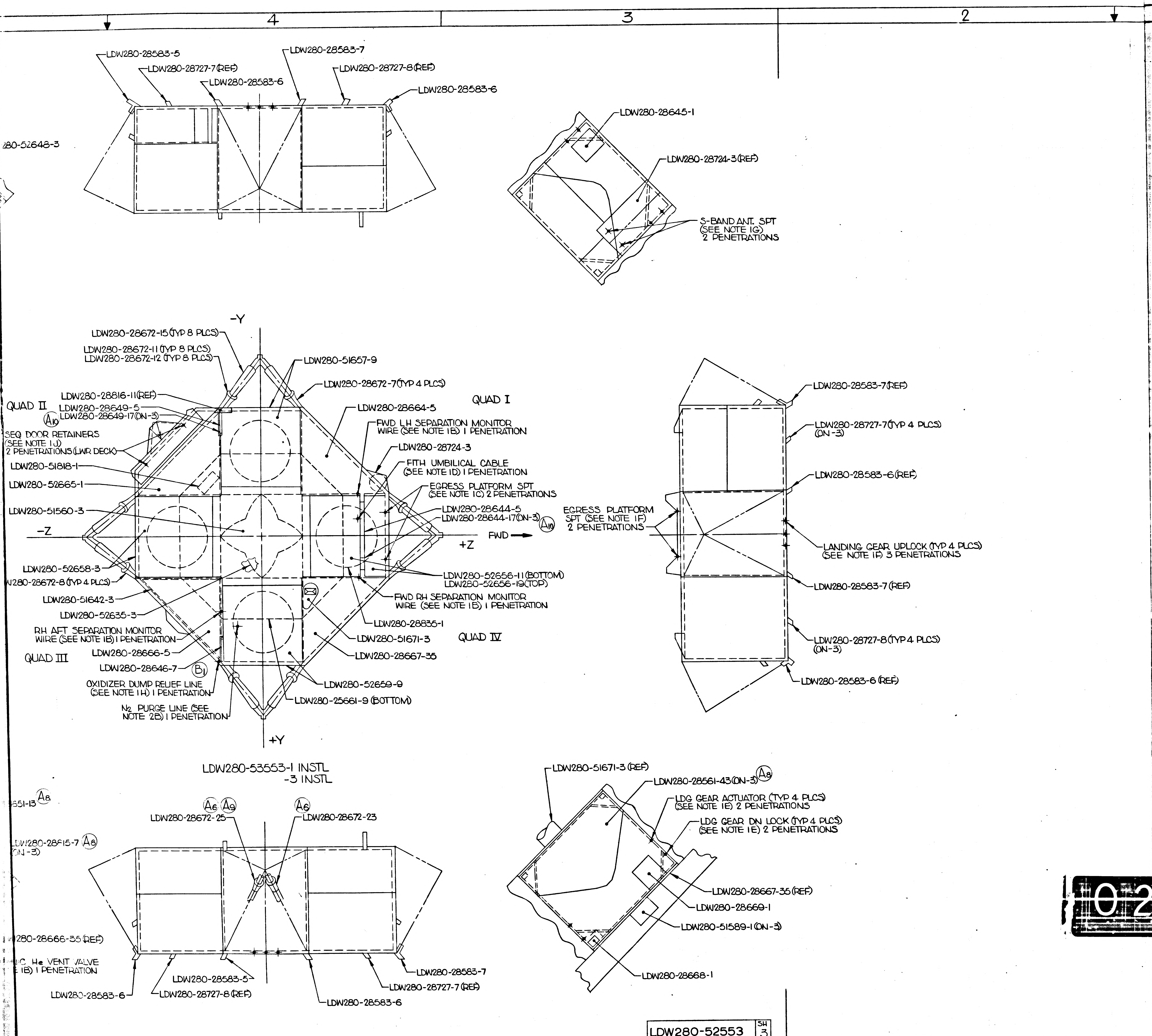
4
3
2
LDW280-28583-5
LDW280-28727-7 (REF)
LDW280-28583-7
LDW280-28727-8 (REF)
LDW280-28583-6
LDW280-28583-6
280-52648-3
LDW280-28645-1
LDW280-28724-3 (REF)
S-BAND ANT. SPT
(SEE NOTE 1G)
2 PENETRATIONS
-Y
LDW280-28672-15 (TYP 8 PLCS)
LDW280-28672-11 (TYP 8 PLCS)
LDW280-28672-12 (TYP 8 PLCS)
LDW280-51657-9
LDW280-28672-7 (TYP 4 PLCS)
QUAD I
LDW280-28816-11 (REF)
QUAD II
LDW280-28649-5
A10
LDW280-28649-17 (ON-3)
LDW280-28664-5
SEQ DOOR RETAINERS
(SEE NOTE 1 J)
2 PENETRATIONS (LWR DECK)
FWD LH SEPARATION MONITOR
WIRE (SEE NOTE 1E) 1 PENETRATION
LDW280-28724-3
LDW280-51818-1
FITH UMBILICAL CABLE
(SEE NOTE 1D) 1 PENETRATION
LDW280-52665-1
EGRESS PLATFORM SPT
(SEE NOTE 1C) 2 PENETRATIONS
LDW280-51560-3
LDW280-28644-5
LDW280-28644-17 (ON-3)
A10
-Z
FWD
+Z
LDW280-52658-3
280-28672-8 (TYP 4 PLCS)
LDW280-52656-11 (BOTTOM)
LDW280-52656-19 (TOP)
LDW280-51642-3
FWD RH SEPARATION MONITOR
WIRE (SEE NOTE 1E) 1 PENETRATION
LDW280-52635-3
LDW280-28835-1
RH AFT SEPARATION MONITOR
WIRE (SEE NOTE 1B) 1 PENETRATION
LDW280-51671-3
QUAD IV
LDW280-28666-5
LDW280-28667-35
QUAD III
LDW280-28646-7
B1
OXIDIZER DUMP RELIEF LINE
(SEE NOTE 1H) 1 PENETRATION
LDW280-52659-9
LDW280-25661-9 (BOTTOM)
N2 PURGE LINE (SEE
NOTE 2B) 1 PENETRATION
+Y
EGRESS PLATFORM
SPT (SEE NOTE 1F)
2 PENETRATIONS
LDW280-28583-7 (REF)
LDW280-28727-7 (TYP 4 PLCS)
(ON-3)
LDW280-28583-6 (REF)
LANDING GEAR UPLOCK (TYP 4 PLCS)
(SEE NOTE 1F) 3 PENETRATIONS
LDW280-28583-7 (REF)
LDW280-28727-8 (TYP 4 PLCS)
(ON-3)
LDW280-28583-6 (REF)
LDW280-53553-1 INSTL
-3 INSTL
651-13
A8
A6
A9
A6
LDW280-28672-25
LDW280-28672-23
LDW280-28815-7
A8
(ON-3)
280-28666-35 (REF)
C He VENT VALVE
1B) 1 PENETRATION
LDW280-28583-5
LDW280-28583-7
LDW280-28727-7 (REF)
LDW280-28583-6
LDW280-28727-8 (REF)
LDW280-28583-6
LDW280-51671-3 (REF)
LDW280-28561-43 (ON-3)
A8
LDG GEAR ACTUATOR (TYP 4 PLCS)
(SEE NOTE 1E) 2 PENETRATIONS
LDG GEAR DN LOCK (TYP 4 PLCS)
(SEE NOTE 1E) 2 PENETRATIONS
LDW280-28667-35 (REF)
LDW280-28669-1
LDW280-51589-1 (ON-3)
LDW280-28668-1
LDW280-52553 SH 3
4
3
2

MANUFACTURING OPERATIONS
UNLESS OTHERWISE SPECIFIED
NOTES CHECKED √ APPLY TO THIS DWG.

PART NUMBER
AND ALL OTHER MARKINGS
IN REGION MARKED ⊠
USE BOTH SIDES IF NECESSARY.

FILLET AND INSIDE CORNER
RADII TOLERANCES
.016R TO .062R ± .010
.063R TO .250R ± .015
OVER .250R ± .030

DEPTH SHOWN FOR TAPPED
HOLES IS FULL THDS. 2-3 IMP THDS.
BEYOND PERMISSIBLE.

EXTERNAL THREAD LENGTH
SHOWN INCLUDES
2 IMPERFECT THREADS MAX.

DO NOT CADMIUM PLATE & PAINT
HOLES OR SURFACES MARKED
WITH DOUBLE ASTERISK.

MISMATCH STEP OF ± .005
PERMISSIBLE DUE TO CHANGE
OF CUTTERS AT INSIDE
INTERSECTING SURFACES.

DIAMETERS MARKED
MUST BE CONCENTRIC WITHIN
FULL INDICATOR
READING

HOLES MUST BE KEPT FREE OF
CHROME PLATING SOLUTION.

ALL DIMENSIONS SHOWN TO BE MET
AFTER CADMIUM PLATING.
THICKNESS OF PLATE .0003 MIN.
TO .0005 MAX. MIN. THICKNESS TO
BE .0002 ON THREADED AREAS.
NO ALLOWANCE FOR PLATING IN
HOLES

125√ SURFACE ROUGHNESS
INCLUDING REAMED HOLES
PER MIL-STD-10

200√ FOR ALL DRILLED HOLES

REMOVE ALL BURRS.
BREAK ALL EDGES .015-.031

INSPECTION INFORMATION
MINIMUM PERMISSIBLE
AVERAGE EDGE DISTANCE
MARKED IS

SYMBOL √ DENOTES SURFACE
TO BE MACHINED

UNLESS OTHERWISE SPECIFIED
TOLERANCE ON FLANGES IS ± 1/32

LENGTHS OF AN, NAS & MS AL ALY
RIVETS SHORTER THAN 1 INCH ARE
NOT SPECIFIED.

TOLERANCE ON LOFTED
DELINEATIONS IS

DWG SIZE 34 X 66
PRINTING INFO ONLY
FULL SIZE SHEET AREA (36 X 76) = 19 SQ. FT.
1/2 SIZE SHEET AREA (1/4 OF FULL) = 4.7 SQ. FT.
PRINT TRIM LINE

NOTES:

1. WRAP PROTRUSION AS SHOWN ON LPC280-7

PENETRATION	LPC 280-7	
	W	L
A	5	4
B	2	4
C	6	4
D	4	4
E	7	5
F	3	5
G	2	6
H	8	5
J	4	5

2. RUBBER STAMPED PART NUMBERS ON THE EXTERNAL SURFACES ARE TO BE REMOVED BY A HAND SOLVENT WIPE WITH ISOPROPYL ALCOHOL IN ACCORDANCE WITH LSP14-7011 PARA 3.4.2.
3. WHERE NECESSARY ON INSTL OF LDW280-23712 STANDOFFS, GR500A-4 MAY BE SUBSTITUTED FOR MS20470A3 PROVIDED EDGE DISTANCE OF 1 1/2 FASTENER DIA IS MAINTAINED.
4. FOR INSULATION BLANKET ABRASION PROTECTION, TAPE STRUCTURE WITH GT835P-8 TAPE PER LPC 280-27.
5. COVER ALL INSIDE MYLAR SURFACES OF BLANKETS WITH ONE LAYER OF ALUMINIZED POLYIMIDE IN ACCORDANCE WITH LPC280-31, .0005 THK, MAXIMUM AVAILABLE WIDTH.

LDW280-52553 B

LDW280-52553 B

02/02

NAS 9-1100

GRUMMAN AIRCRAFT ENGRG CORP., BETHPAGE, L. I., NEW YORK

LM MODEL OR END ITEM	SIZE J	CODE IDENT NO. 26512	LDW280-52553	B
	SCALE 1/20		SHEET 3.00	

Ⓑ

LDW280-52553 C

MODEL OR END ITEM	NEXT ASSY	MODULE OR SER NO.	REQD PER MODULE OR END ITEM
LM	LDW280-52508	LM-2 (52)	1 EA

PART NO. LDW280-52553-1 & -3

GAEC SCH NO. 52-1

WORK PKG FUNCTION NO. 110

SH REV STATUS: FOR DESCRIPTION OF REV SEE SUBQ SH

SHEET	1.00	1.10	1.11	2.00	2.01	2.02	3.00
REV	C	C	C	C	C	C	C

LAST SECT LTR USED 3

LAST DASH NO. USED -3

GRUMMAN REL INFO BC

PRIM NO. 207

UNLESS OTHERWISE SPECIFIED DIMENSIONS ARE IN INCHES
TOLERANCE UNLESS SPECIFIED
FRACTIONS - DECIMALS - ANGLES
±1/32 ±.010 ±1/2°

ORIG DWG AUTH

DETAIL SPEC REQUIREMENT

CLASS II ENGRG CHANGE

CLASS I ENGRG CHANGE

CONTRACT NO NAS9-1100

LINE ITEM

DOCUMENTATION TYPE II

DRAWN BY LUNDGREN 7-1-67

LAYOUT BY J. ROGERS

CHECKED BY 7-17-67

GROUP LDR

WEIGHTS

STRUCTURES

THERMO AB 12-15-66

RELIABILITY

PROJ ENGR

REL GROUP

GRUMMAN AIRCRAFT ENGRG CORP
BETHPAGE L. I. NEW YORK

SHIELD INSTALLATION
DESCENT STAGE ~ THERMAL & BASE HEAT

SIZE B

CODE IDENT NO. 26512

LDW280-52553 C

SCALE NONE

SHEET 1.00 OF 7

01

NAS 9-1100

REVISIONS FOR CONTINUATION OF REVISIONS SEE SHEET 1.11

CHANGE LTR	ITEM NO.	SHEET NO.	ZONE	GRUMMAN INFO ONLY	DET SPEC	CLASS I	CLASS II	ENGRG ORDER	DESCRIPTION	EFFECTIVITY	DISPOSITION OF EXISTING PARTS REWORK	DISPOSITION OF EXISTING PARTS SCRAP	CHANGED BY AND DATE	ENGRG APPD	~~GOVT~~ APPD
A	1	1,1.10,2,2.01,3						EO A1	EO A1 INITIAL DWG RELEASE, PARTS MADE PER EO	LM-2	NOT	REQD	LUNDSTEN 7-11-67		
	2	3						EO A2	ADDED NOTE 3		✓				
	3	2,3					✓	EO A3	REMOVED LDW280P18191-11 FROM -1						
	4	2.01, 3	6B				✓	EO A4	ON-1 INSTL ADDED LDW280-28731-3 (8REQD)						
	5	2.01, 3						LEO 280-488	ADDED NOTE #4 TO F/D. ADDED GT835P-8 TO B/M FOR -1 & -3.						
	6	2,3	4A			✓		EO A6 LCD 19-1220	ON-1 IN F/D & B/M LDW280-28672-21 & -23 WAS LDW280-28672-19.						
	7	2.01, 3				✓		EO A7 LCD 19-1136	ADDED NOTE 5 - COVER ALL INSIDE SURFACES OF BLANKETS WITH ONE LAYER OF ALUMINIZED POLYIMIDE PER LPC280-31. IN B/M ADDED ALUMINIZED POLYIMIDE, GT835P-8 TAPE, GS577A-1 STAPLES, A/R						
	8	2,2.01,3	3B, 5A, 6A				✓	EO A8 LCD 928	LDW280-28651-13 REPLACES LDW280-28651-7, LDW280-28561-43 REPLACES LDW280-28561-5, LDW280-28817-7 REPLACES LDW280-28817-1 & LDW280-28815-7 REPLACES LDW280-28815-3.						
	9	2.01, 3	4A			✓		EO A9 LCD 19-1220	REF EO A6 -LDW280-28672-21(1) CHANGED TO LDW280-28672-25(1)		NOT	REQD			
	10	2,3	3B, 4C				✓	EO A10 LCD 1173	ON-3 ADDED LDW280-28644-17, LDW280-28646-15, LDW280-28649-17		✓				
B	1	1,1.10,2,3	4B			✓		EO B1 LCD 1244	REF EO A10 - ON-1 REMOVED LDW280-28646-15 INSTL						
	2								REF EO A7- LM-2 EFF WAS LM-3		NOT	REQD			
	3								REF EO B1 - "ON-1" SHOULD BE "ON-3"						
C	1	1.00,1.10, 2.00,3.00	4B				✓	EOC1,LCD1173	ON-1, LDW280-28646-17 WAS LDW280-28646-7	LM-2	✓		REYES 1-10-68 RCM		
	2	1.00,2.01, 3.00	6B			✓		EOC2,LCD1220, CCA526	ON-1 INSTL, LDW280-28731-7(7) WAS LDW280-28731-3(7), LDW280-28731-11(1) WAS LDW280-28731-3(1)						
	3	1.00,1.11, 2.00,2.01, 2.02,3.00	4B			✓		EOC3,LCD1244	ON-1, IN B/M & FLD: ADDED LDW280P51100-7(1), P51101-5(1), P51102-5(1), P51103-5(1), P51104-5(1), P51105-7(1), P51106-5(1), P51107-5(1), P51108-5(1), P51109-5(1), P51111-9(1), P51112-5(1), P51113-3(1), P51114-5(1), P51115-5(1),						

CHG APPROVED	LTR	~~GROUP LDR~~	VEH DES INT	STRUCTURES	STRUCTURES	WEIGHTS	THERMO	RELIABILITY				
	B											
	C											

GRUMMAN AIRCRAFT ENGRG CORP., BETHPAGE, L. I., NEW YORK

SIZE	CODE IDENT NO.		
B	26512	LDW280-52553	C
SCALE	NONE	SHEET	1.10

ENG 77.16 3-66

01

NAS 9-1100

REVISIONS FOR CONTINUATION OF REVISIONS SEE SHEET

CHANGE LTR	ITEM NO.	SHEET NO.	ZONE	GRUMMAN INFO ONLY	DET SPEC	CLASS I	CLASS II	ENGRG ORDER	DESCRIPTION	EFFECTIVITY	DISPOSITION OF EXISTING PARTS REWORK	DISPOSITION OF EXISTING PARTS SCRAP	CHANGED BY AND DATE	ENGRG APPD	GOVT APPD
C						✓		EO C3 (CONTINUED) LCD 1244	P51116-9(1), P51117-5(1), P51118-19(3), P51118-21(5), P51118-23(1), P51119-5(1), P51120-3(1), P51121-21(2), P51122-5(1), LDW280-52656-39 (WAS-19), -41 (WAS-11), LDW280-51657-29 (WAS-9), LDW280-52658-15 (WAS-3), LDW280-52659-31 (WAS-9), LDW280-28666-43 (WAS-5), ADDED SH.1.11	LM-2	✓		REYES 1-10-68		
	4	2.01, 3.00	4C 5B				✓	EOC4, LCD1244	ON-1: LDW280-52635-7 REPLACED LDW280-52635-5, LDW280-51657-33 REPLACED LDW280-51657-29						
	5	2.00, 3.00	4B			✓		EOC5, LCD1220, CCA526	IN FLD & B/M FOR -1, REMOVED LDW280-28672-11 & -12 ADDED LDW280-28672-16 & -19						
	6	2.01, 2.02 3.00	4B			✓		EOC6 LCD1244	ON-1, LDW280-51657-29(1)(REPLACED -33), LDW280P51113-7(1) (REPLACED -3), LDW280P51114-19(1) (REPLACED -5), LDW280P51115-1(1) (REPLACED -5), LDW280P51116-1 (REPLACED -9), LDW280P51117-1 (REPLACED -5), LDW280P51118-1 (REPLACED -19), LDW280P51118-3 (REPLACED -21), LDW280P51118-9 (REPLACED -23), LDW280P51119-1 (REPLACED -5), LDW280P51120-1 (REPLACED -3), LDW280P51121-13 (REPLACED -21)						
	7	2.02 3.00	1A 2B			✓		EOC7 LCD1244	ON-1; ADDED GT835T-6 (AS REQD), DETAILS A & B, NOTES 6, 7 & 8 & SHIM AS REQD (.250) MAX.						
	8	2.02, 3.00	4B			✓		EOC8, LCD1244 CCA667	ON-1; ADDED LDW280P51116-7 WAS -1						
	9	3.00	1B			✓		EOC9, LCD1244	REF EOC7; ADDED TO BOND NOTE "EPON 934 CURE RANGE I PER LSP-14-22500	LM-2	NOT REQD				
	10	2.00, 3.00	4B	P		✓		EO C10 LCD 2525 Ⓒ	ON-1; ADDED LDW280-28672-37, REMOVED LDW280-28672-19 ADDED NOTE 9	LM-2	✓		RCM		

CHG APPROVED

LTR	GROUP LDR	VEH DES INT	STRUCTURES	STRUCTURES	WEIGHTS	THERMO	RELIABILITY			
C										

GRUMMAN AIRCRAFT ENGRG CORP., BETHPAGE, L. I., NEW YORK

SIZE	CODE IDENT NO.		
B	26512	LDW280-52553	C Ⓒ

SCALE NONE SHEET 1.11

ENG 77.16 3-66

01 NAS 9-1100

					-3	-1	CODE IDENT	PART NO.	I&T	NOMENCLATURE OR DESCRIPTION	MATERIAL	GOVT SPEC	COML SPEC	STOCK SIZE	PROCESS SYM	FINISH NO.	ZONE
						1		LDW280-28672-23	E	SHIELD INSTL	SEE DWG						4A
						6		LDW280-28672-37		SHIELD INSTL							5B
						8		LDW280-28672-15		SHIELD INSTL							4C
						8		LDW280-28672-16		SHIELD INSTL							4C
						4		LDW280-28672-8		UPPER OUTRIGGER							5B
						4		LDW280-28672-7		UPPER OUTRIGGER							4C
						1		LDW280-28669-1		S BAND ANT. ACCESS							3A
						1		LDW280-28667-35		FIXED SHIELD Q IV							3B
						1		LDW280-28666-43		FIXED SIDES Q III							4B
						1		LDW280-28664-5		FIXED SHIELD, Q I							4C
					1			LDW280-28652-13		FUEL DRAIN ACCESS							5A
					1			LDW280-28651-13		COMPONENT ACCESS							5A
					1			LDW280-28649-17		LH AFT INTERSTAGE							4C
						1		LDW280-28649-5		LH AFT INTERSTAGE							4C
						1		LDW280-28647-3		FILL & DRAIN ACCESS							6C
						1		LDW280-28646-17		RH AFT INTERSTAGE							4B
						1	2	LDW280-28645-1		PLSS BATT ACCESS							3D
						1		LDW280-28644-5		FWD INTERSTAGE							3B
						2		LDW280-28583-7		LDG GEAR PENETRATION LWR							3A
						4		LDW280-28583-6		LDG GEAR PENETRATION LWR							4A
						2		LDW280-28583-5		LDG GEAR PENETRATION LWR							4A
					1			LDW280-28561-43		EPS BATT ACCESS							3B
					1			LDW280-28644-17		FWD INTERSTAGE							3B
						1		LDW280-25661-9		BASE HEAT SHIELD	SEE DWG						4B
								LDW280-52553-3		THERM SHLD INSTL-RMVLE					NONE	NONE	4B
								LDW280-52553-1	E	THERM SHLD INSTL-FIXED					NONE	NONE	4B
QTY PER ASSEMBLY																	

= CLEANLINESS LEVEL PER LSP 14-C011

SYM OR NO.	PROCESS OR FINISH	GRUMMAN SPEC OR MILITARY SPEC	SYM OR NO.	PROCESS OR FINISH	GRUMMAN SPEC OR MILITARY SPEC	SYM OR NO.	PROCESS OR FINISH	GRUMMAN SPEC OR MILITARY SPEC

I & T: IDENTIFICATION AND TRACEABILITY IN ACCORDANCE WITH :
NONE

GRUMMAN AIRCRAFT ENGRG CORP, BETHPAGE, L. I., NEW YORK

SIZE	CODE IDENT NO.		
B	26512	LDW280-52553	C ⓒ
SCALE NONE			SHEET 2.00

ENG 77.2 7-65

01

NAS 9-1100

QTY PER ASSEMBLY -3	QTY PER ASSEMBLY -1	CODE IDENT	PART NO.	I&T	NOMENCLATURE OR DESCRIPTION	MATERIAL	GOVT SPEC	COML SPEC	STOCK SIZE	PROCESS SYM	FINISH NO.	ZONE
AS	REQD	24761	SEE NOTE 5		ALUMINIZED POLYIMIDE							
AS	REQD		GS577A-1		STAPLE							
AS	REQD		GT835P-8		TAPE							
	1		LDW280-52822-1	E	LDG RADAR SUPPORT	SEE DWG						5D
	1		LDW280-52665-1		FIXED SHIELD QII							5C
	1		LDW280-52659-9		DS RH THERMAL							4B
	1		LDW280-52658-15		DS AFT THERMAL							5B
	1		LDW280-52656-19		DS FWD THERMAL							3B
	1		LDW280-52656-11		FWD THERMAL LWR							3B
	1		LDW280-52648-3		SEQ ACCESS DOOR							5D
	1		LDW280-52635-7		BLAST DEFLECTOR							5B
	1		LDW280-51818-1		QII LWR METEOROID							5C
	1		LDW280-51671-3		GUILLOTINE ACCESS							4B
	1		LDW280-51657-29		DS LH THERMAL							4C
	1		LDW280-51642-3		QIII LWR METEOROID							5E
1			LDW280-51589-1		OXIDIZER, FILL&DRAIN							3A
	1		LDW280-51560-3		UPPER ENG COMP							5C
	1		LDW280-28731-11		SHIELD INSTL							6B
	1		LDW280-28835-1		PROP TANK MET'D PROTECTION							4B
1			LDW280-28817-7		CB 3 CONTROL BOX							6A
	1		LDW280-28816-11		He TEST POINT ACCESS							5C
1			LDW280-28815-7		AMB HEL ACCESS							5A
	7		LDW280-28731-7		EXTERNAL SHIELD INSTL							6B
	8		LDW280-28731-1		LWR OUTRGR INTL&EXTL							6B
4			LDW280-28727-8		LDG CHOCK PEN							2B
4			LDW280-28727-7		LDG CHOCK PEN							2C
	1		LDW280-28724-3		S-BAND ANT							3C
	1		LDW280-28668-1		EX PWR PLUG ACCESS							3A
	1		LDW280-28672-25	E	SHIELD INSTL	SEE DWG						4A

CL = CLEANLINESS LEVEL PER LSP14-0011

SYM OR NO.	PROCESS OR FINISH	GRUMMAN SPEC OR MILITARY SPEC	SYM OR NO.	PROCESS OR FINISH	GRUMMAN SPEC OR MILITARY SPEC	SYM OR NO.	PROCESS OR FINISH	GRUMMAN SPEC OR MILITARY SPEC

I & T: IDENTIFICATION AND TRACEABILITY IN ACCORDANCE WITH : NONE

GRUMMAN AIRCRAFT ENGRG CORP, BETHPAGE, L. I., NEW YORK

SIZE	CODE IDENT NO.		
B	26512	LDW280-52553	C

SCALE NONE

SHEET 2.01

ENG 77.2 7-65

01

NAS 9-1100

QTY PER ASSEMBLY -3	QTY PER ASSEMBLY -1	PART NO.	I&T	CODE IDENT	NOMENCLATURE OR DESCRIPTION	MATERIAL	GOVT SPEC	COML SPEC	STOCK SIZE	PROCESS SYM	FINISH NO.	ZONE
	A/R	SEE NOTE 7			SHIM							
	A/R	GT-835T-6			TAPE, TEFLON							
	1	LDW280P51122-5			COVER INSTL	SEE DWG						5B
	2	LDW280P51121-13										4C
	1	LDW280P51120-1										4C
	1	LDW280P51119-1										4B
	1	LDW280P51118-9										4C
	5	LDW280P51118-3										4C
	3	LDW280P51118-1			COVER INSTL							5B
	1	LDW280P51117-1			BLANKET INSTL							3B
	1	LDW280P51116-7										4B
	1	LDW280P51115-1										4C
	1	LDW280P51114-19										5B
	1	LDW280P51113-7										5C
	1	LDW280P51112-5										4C
	1	LDW280P51111-9										4B
	1	LDW280P51109-5										4C
	1	LDW280P51108-5										5C
	1	LDW280P51107-5										4B
	1	LDW280P51106-5										4B
	1	LDW280P51105-7			BLANKET INSTL							5C
	1	LDW280P51104-5			SHIELD INSTL							4C
	1	LDW280P51103-5			BLANKET							4C
	1	LDW280P51102-5			BLANKET							4B
	1	LDW280P51101-5			BLANKET							5B
	1	LDW280P51100-7			BLANKET	SEE DWG						4B

SYM OR NO.	PROCESS SYM OR FINISH NO.	GRUMMAN SPEC OR MILITARY SPEC	SYM OR NO.	PROCESS SYM OR FINISH NO.	GRUMMAN SPEC OR MILITARY SPEC	SYM OR NO.	PROCESS SYM OR FINISH NO.	GRUMMAN SPEC OR MILITARY SPEC

I & T: IDENTIFICATION AND TRACEABILITY IN ACCORDANCE WITH NONE

GRUMMAN AIRCRAFT ENGRG CORP., BETHPAGE, L. I., NEW YORK

SIZE	CODE IDENT NO.		
B	26512	LDW280-52553	C ⓒ

SCALE NONE SHEET 2.02

ENG 77.2 5-64

01

NAS 9-1100

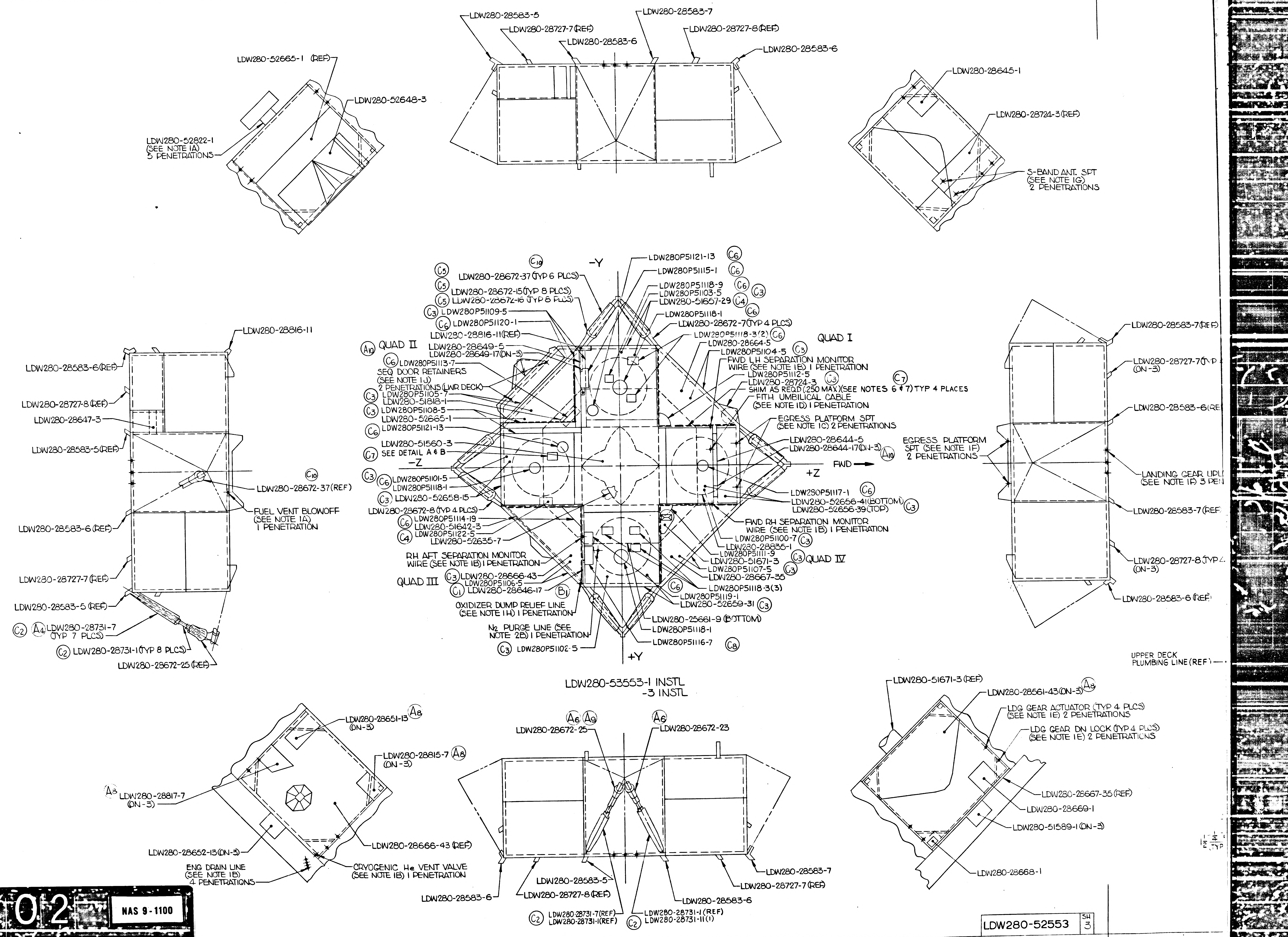
6
5
4
3
D
C
B
A
LDW280-52665-1 (REF)
LDW280-52648-3
LDW280-52822-1 (SEE NOTE 1A) 5 PENETRATIONS
LDW280-28583-5
LDW280-28727-7(REF)
LDW280-28583-6
LDW280-28583-7
LDW280-28727-8(REF)
LDW280-28583-6
LDW280-28645-1
LDW280-28724-3(REF)
S-BAND ANT. SPT (SEE NOTE 1G) 2 PENETRATIONS
LDW280-28816-11
LDW280-28583-6(REF)
LDW280-28727-8(REF)
LDW280-28647-3
LDW280-28583-5(REF)
LDW280-28672-37(REF)
C10
FUEL VENT BLOWOFF (SEE NOTE 1A) 1 PENETRATION
LDW280-28583-6(REF)
LDW280-28727-7(REF)
LDW280-28583-5(REF)
C2 A4 LDW280-28731-7 (TYP 7 PLCS)
C2 LDW280-28731-1(TYP 8 PLCS)
LDW280-28672-25(REF)
-Y
+Y
-Z
+Z
FWD
QUAD I
QUAD II
QUAD III
QUAD IV
A10
C10 LDW280-28672-37 (TYP 6 PLCS)
C5 LDW280-28672-15(TYP 8 PLCS)
C5 LDW280-28672-16 (TYP 8 PLCS)
C3 LDW280P51109-5
C6 LDW280P51120-1
LDW280-28816-11(REF)
LDW280-28649-5
LDW280-28649-17(ON-3)
C6 LDW280P51113-7
SEQ DOOR RETAINERS (SEE NOTE 1J) 2 PENETRATIONS (LWR DECK)
C3 LDW280P51105-7
LDW280-51818-1
C3 LDW280P51108-5
LDW280-52665-1
C6 LDW280P51121-13
LDW280-51560-3
C7 SEE DETAIL A & B
C3 C6 LDW280P51101-5
LDW280P51118-1
C3 LDW280-52658-15
LDW280-28672-8(TYP 4 PLCS)
C6 LDW280P51114-19
LDW280-51642-3
LDW280P51122-5
C4 LDW280-52635-7
RH AFT SEPARATION MONITOR WIRE (SEE NOTE 1B) 1 PENETRATION
C3 LDW280-28666-43
LDW280P51106-5
C1 LDW280-28646-17
B1
OXIDIZER DUMP RELIEF LINE (SEE NOTE 1H) 1 PENETRATION
N2 PURGE LINE (SEE NOTE 2B) 1 PENETRATION
C3 LDW280P51102-5
LDW280P51121-13 C6
LDW280P51115-1 C6
LDW280P51118-9 C6
LDW280P51103-5 C3
LDW280-51657-29 C4
C6
LDW280P51118-1
LDW280-28672-7(TYP 4 PLCS)
LDW280P51118-3(2) C6
LDW280-28664-5
LDW280P51104-5 C3
FWD LH SEPARATION MONITOR WIRE (SEE NOTE 1B) 1 PENETRATION
LDW280P51112-5
LDW280-28724-3 C3
C7
SHIM AS REQ'D (.250 MAX)(SEE NOTES 6 & 7) TYP 4 PLACES
FITH UMBILICAL CABLE (SEE NOTE 1D) 1 PENETRATION
EGRESS PLATFORM SPT (SEE NOTE 1C) 2 PENETRATIONS
LDW280-28644-5
LDW280-28644-17(ON-3) A10
EGRESS PLATFORM SPT (SEE NOTE 1F) 2 PENETRATIONS
LDW280P51117-1 C6
LDW280-52656-41(BOTTOM)
LDW280-52656-39(TOP) C3
FWD RH SEPARATION MONITOR WIRE (SEE NOTE 1B) 1 PENETRATION
LDW280P51100-7 C3
LDW280-28835-1
LDW280P51111-9
LDW280-51671-3 C3
LDW280P51107-5 C3
LDW280-28667-35
C6 LDW280P51118-3(3)
LDW280P51119-1
LDW280-52659-31 C3
LDW280-25661-9 (BOTTOM)
LDW280P51118-1
LDW280P51116-7 C8
LDW280-28583-7(REF)
LDW280-28727-7(TYP (ON-3)
LDW280-28583-6(RE
LANDING GEAR UPL (SEE NOTE 1F) 3 PE
LDW280-28583-7(REF
LDW280-28727-8 (TYP (ON-3)
LDW280-28583-6 (REF)
UPPER DECK PLUMBING LINE (REF)
LDW280-53553-1 INSTL
-3 INSTL
LDW280-28651-13 A8 (ON-3)
LDW280-28815-7 A8 (ON-3)
A3 LDW280-28817-7 (ON-3)
LDW280-28666-43 (REF)
LDW280-28652-13(ON-3)
ENG DRAIN LINE (SEE NOTE 1B) 4 PENETRATIONS
CRYOGENIC He VENT VALVE (SEE NOTE 1B) 1 PENETRATION
A6 A9 LDW280-28672-25
A6 LDW280-28672-23
LDW280-28583-6
LDW280-28583-5
LDW280-28727-8(REF)
LDW280-28583-7
LDW280-28727-7(REF)
LDW280-28583-6
C2 LDW280-28731-7(REF) LDW280-28731-1(REF)
C2 LDW280-28731-1 (REF) LDW280-28731-11(1)
LDW280-51671-3 (REF)
LDW280-28561-43(ON-3) A8
LDG GEAR ACTUATOR (TYP 4 PLCS) (SEE NOTE 1E) 2 PENETRATIONS
LDG GEAR DN LOCK (TYP 4 PLCS) (SEE NOTE 1E) 2 PENETRATIONS
LDW280-28667-35 (REF)
LDW280-28669-1
LDW280-51589-1 (ON-3)
LDW280-28668-1

01/02 NAS 9-1100

LDW280-52553 SH 3

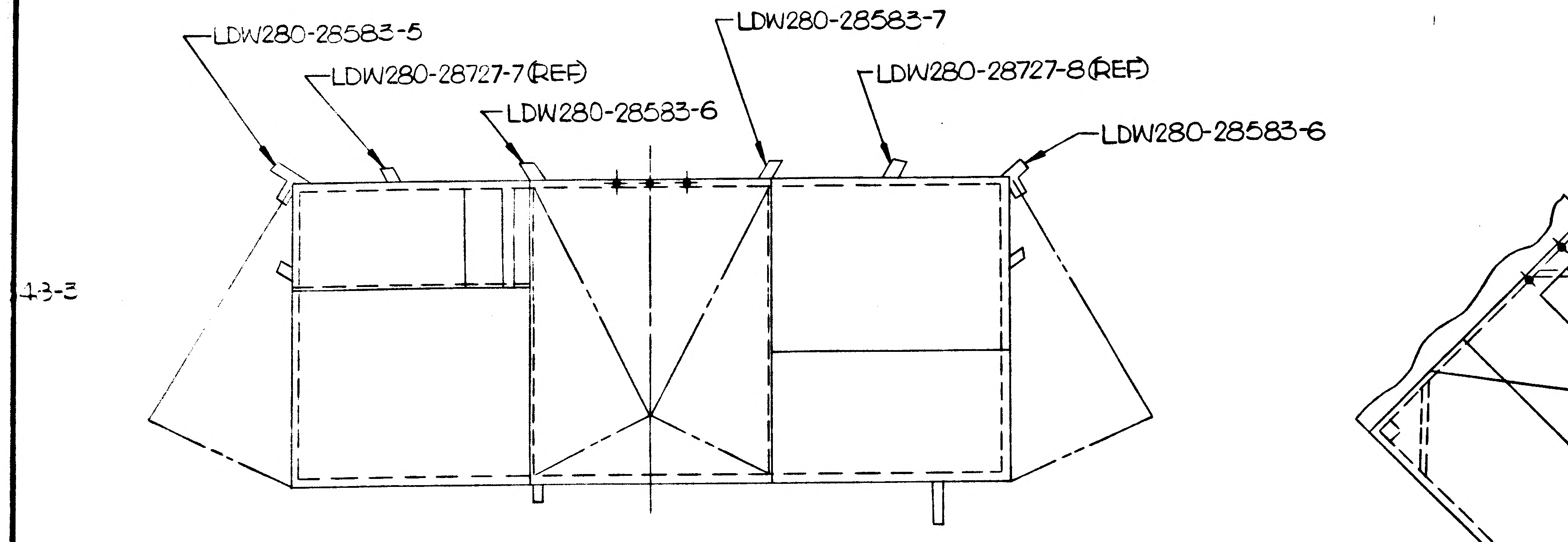

LDW280-28583-5
LDW280-28727-7(REF)
LDW280-28583-7
LDW280-28583-6
LDW280-28727-8(REF)
LDW280-28583-6
13-3

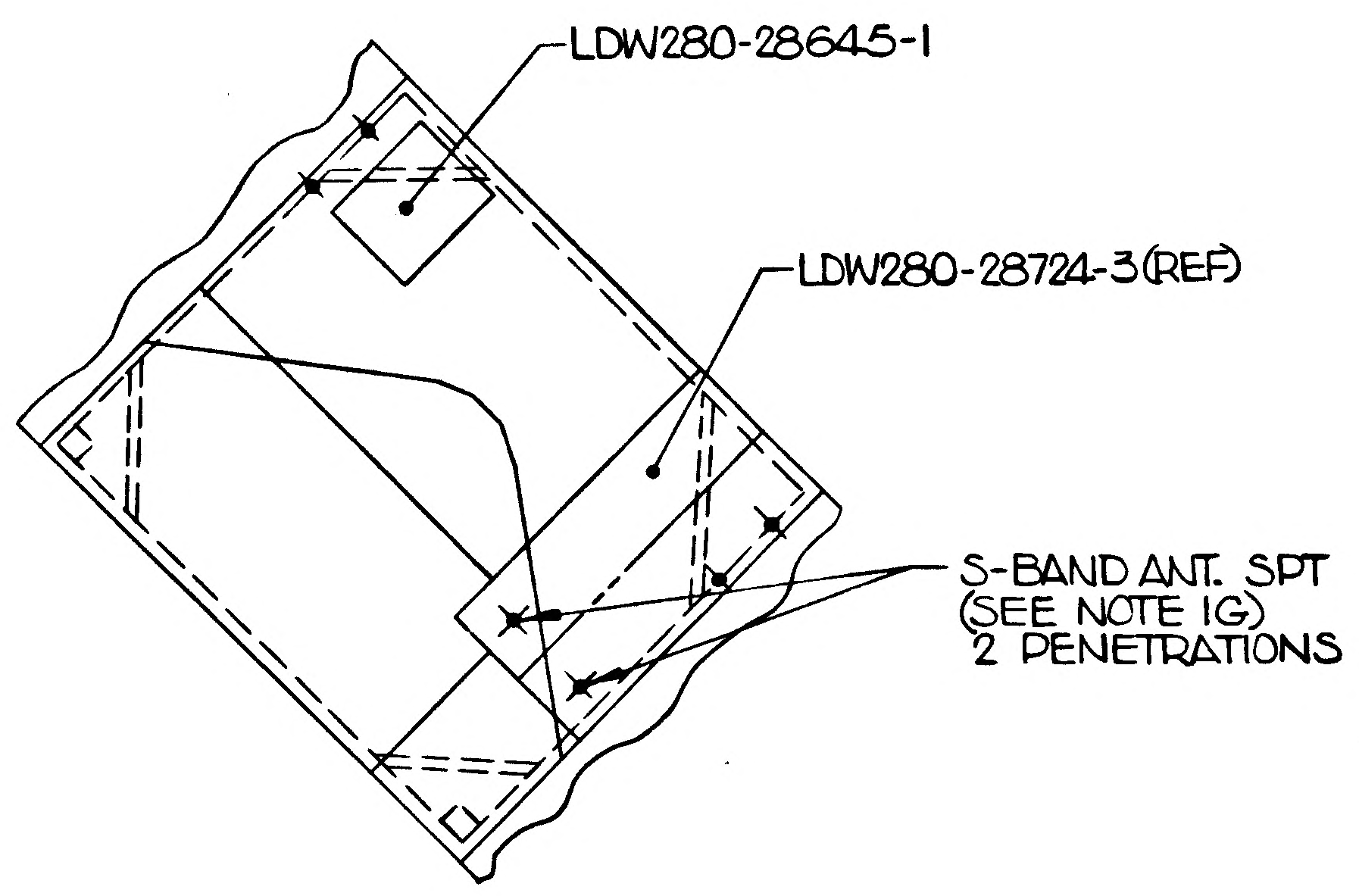

LDW280-28645-1
LDW280-28724-3(REF)
S-BAND ANT. SPT (SEE NOTE 1G) 2 PENETRATIONS

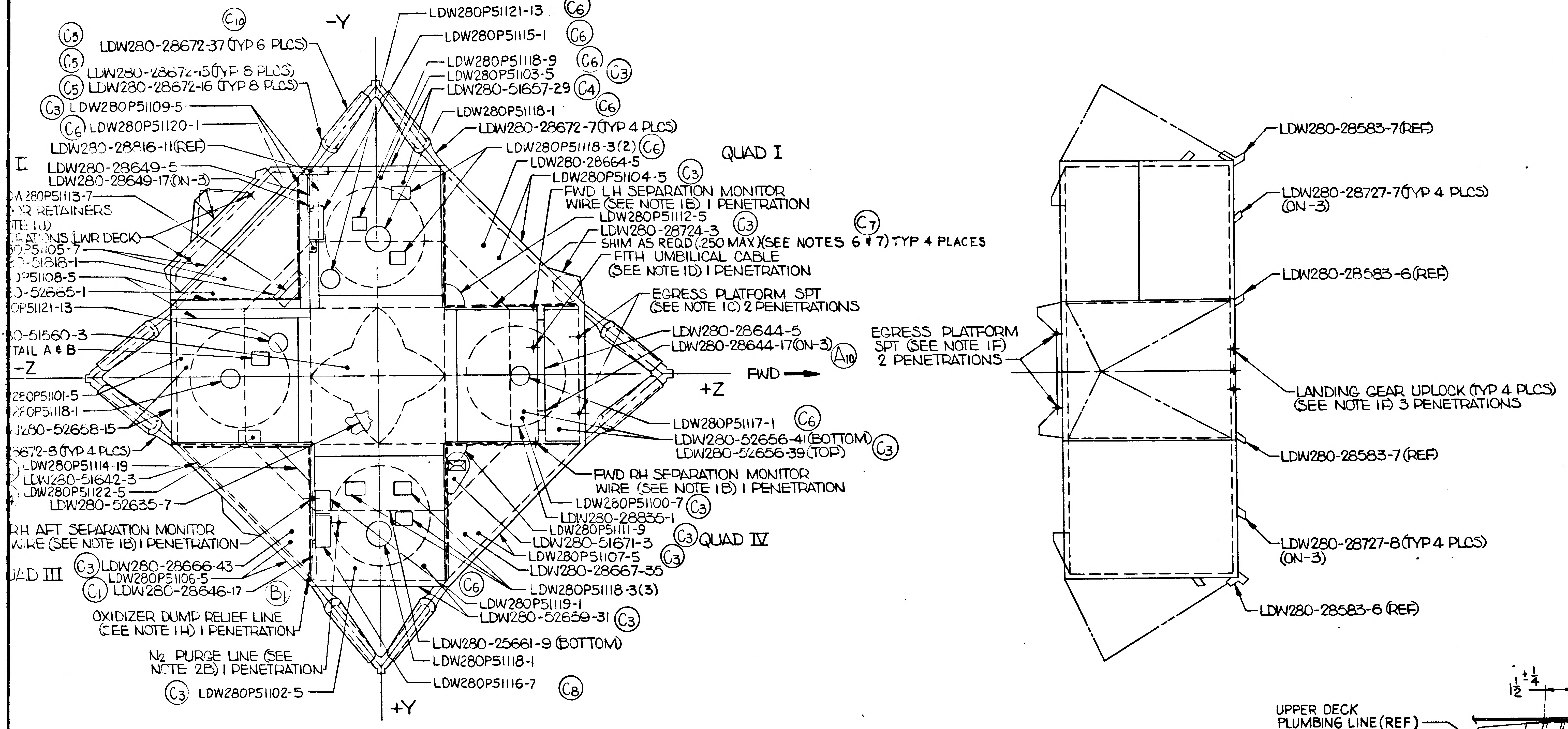

C10
-Y
C5 LDW280-28672-37 (TYP 6 PLCS)
C5 LDW280-28672-15 (TYP 8 PLCS)
C5 LDW280-28672-16 (TYP 8 PLCS)
C3 LDW280P51109-5
C6 LDW280P51120-1
LDW280-28816-11(REF)
I
LDW280-28649-5
LDW280-28649-17(ON-3)
W280P51113-7
OR RETAINERS
TE 1J)
RATIONS (LWR DECK)
0P51105-7
-51818-1
P51108-5
0-52665-1
0P51121-13
0-51560-3
TAIL A & B
-Z
280P51101-5
280P51118-1
N280-52658-15
8672-8 (TYP 4 PLCS)
LDW280P51114-19
LDW280-51642-3
LDW280P51122-5
LDW280-52635-7
RH AFT SEPARATION MONITOR WIRE (SEE NOTE 1B) 1 PENETRATION
QUAD III
C3 LDW280-28666-43
LDW280P51106-5
C1 LDW280-28646-17
B1
OXIDIZER DUMP RELIEF LINE (SEE NOTE 1H) 1 PENETRATION
N2 PURGE LINE (SEE NOTE 2B) 1 PENETRATION
C3 LDW280P51102-5
+Y
LDW280P51121-13 C6
LDW280P51115-1 C6
LDW280P51118-9 C6
LDW280P51103-5 C3
LDW280-51657-29 C4
LDW280P51118-1 C6
LDW280-28672-7 (TYP 4 PLCS)
LDW280P51118-3(2) C6
QUAD I
LDW280-28664-5
LDW280P51104-5 C3
FWD LH SEPARATION MONITOR WIRE (SEE NOTE 1B) 1 PENETRATION
LDW280P51112-5
LDW280-28724-3 C3
C7
SHIM AS REQD (.250 MAX)(SEE NOTES 6 & 7) TYP 4 PLACES
FITH UMBILICAL CABLE (SEE NOTE 1D) 1 PENETRATION
EGRESS PLATFORM SPT (SEE NOTE 1C) 2 PENETRATIONS
LDW280-28644-5
LDW280-28644-17(ON-3) A10
+Z
FWD
LDW280P51117-1 C6
LDW280-52656-41(BOTTOM)
LDW280-52656-39(TOP) C3
FWD RH SEPARATION MONITOR WIRE (SEE NOTE 1B) 1 PENETRATION
LDW280P51100-7 C3
LDW280-28835-1
LDW280P51111-9
LDW280-51671-3 C3
QUAD IV
LDW280P51107-5 C3
LDW280-28667-35
C6
LDW280P51118-3(3)
LDW280P51119-1
LDW280-52659-31 C3
LDW280-25661-9 (BOTTOM)
LDW280P51118-1
LDW280P51116-7 C8
EGRESS PLATFORM SPT (SEE NOTE 1F) 2 PENETRATIONS
LDW280-28583-7(REF)
LDW280-28727-7(TYP 4 PLCS) (ON-3)
LDW280-28583-6(REF)
LANDING GEAR UPLOCK (TYP 4 PLCS) (SEE NOTE 1F) 3 PENETRATIONS
LDW280-28583-7 (REF)
LDW280-28727-8(TYP 4 PLCS) (ON-3)
LDW280-28583-6 (REF)

LDW280-53553-1 INSTL
-3 INSTL

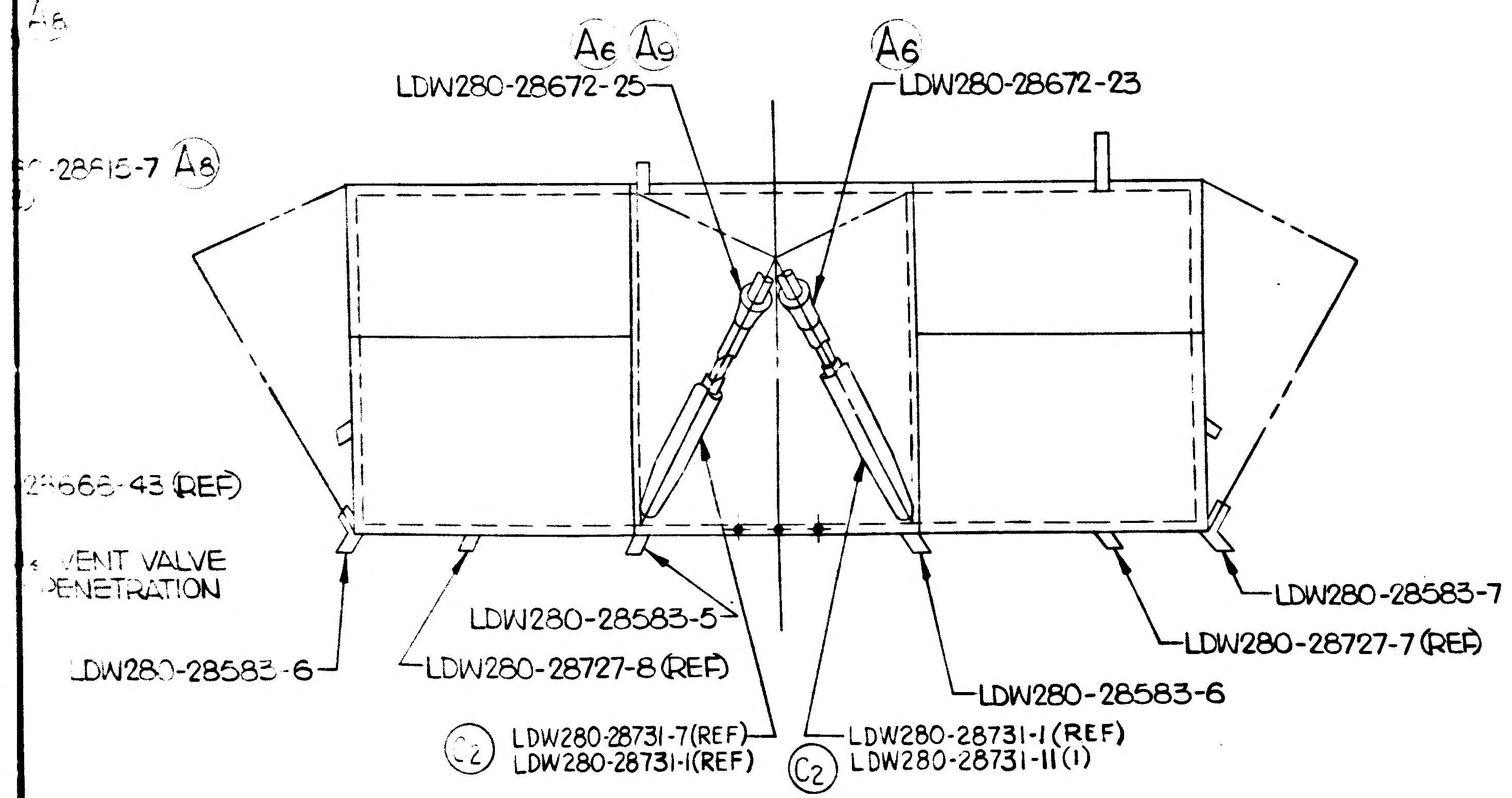

A8
A6 A9
LDW280-28672-25
A6
LDW280-28672-23
-28815-7 A8
28666-43 (REF)
VENT VALVE PENETRATION
LDW280-28583-6
LDW280-28583-5
LDW280-28727-8 (REF)
LDW280-28583-7
LDW280-28727-7 (REF)
LDW280-28583-6
C2 LDW280-28731-7(REF) LDW280-28731-1(REF)
C2 LDW280-28731-1 (REF) LDW280-28731-11(1)

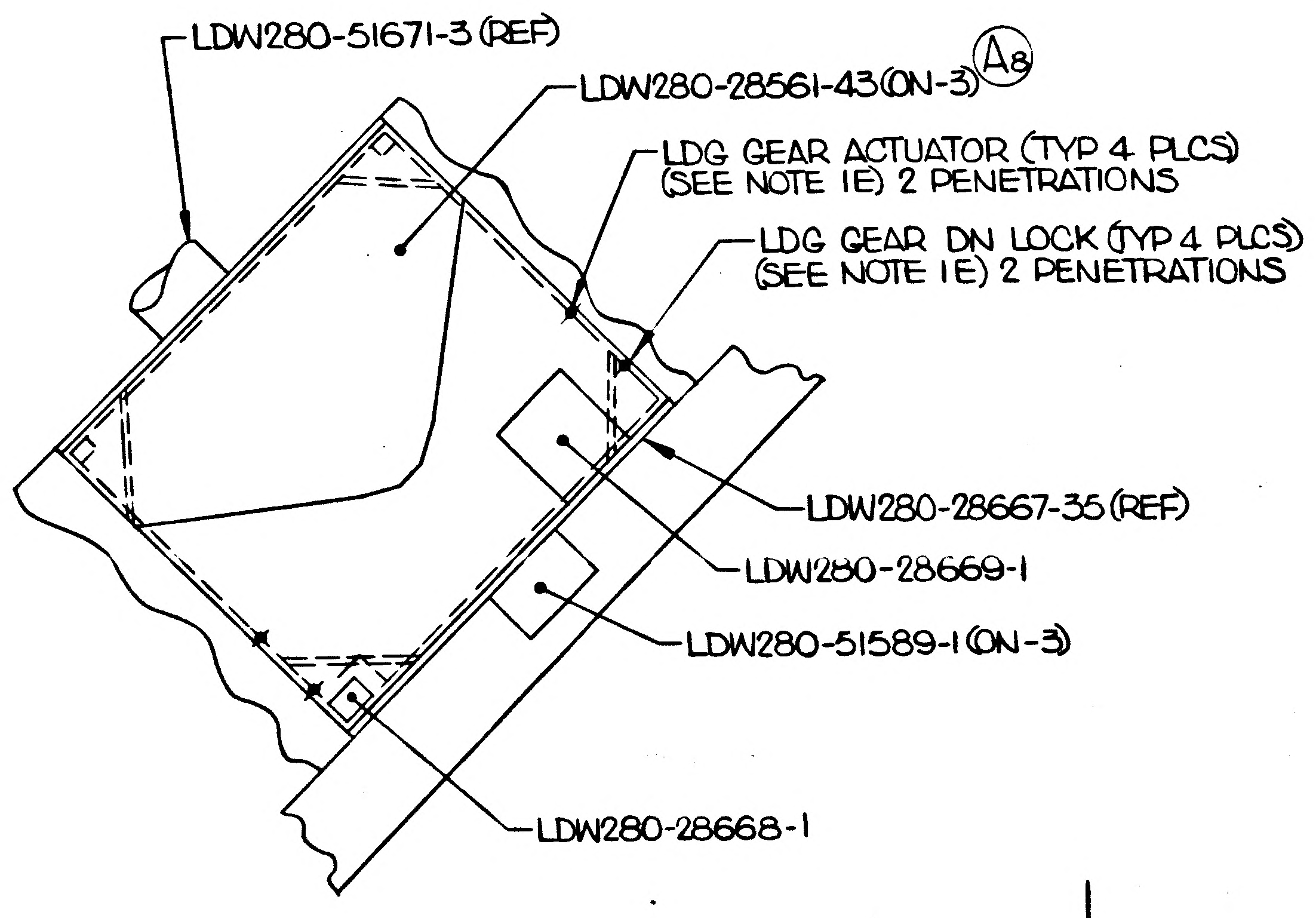

LDW280-51671-3 (REF)
LDW280-28561-43(ON-3) A8
LDG GEAR ACTUATOR (TYP 4 PLCS) (SEE NOTE 1E) 2 PENETRATIONS
LDG GEAR DN LOCK (TYP 4 PLCS) (SEE NOTE 1E) 2 PENETRATIONS
LDW280-28667-35(REF)
LDW280-28669-1
LDW280-51589-1 (ON-3)
LDW280-28668-1

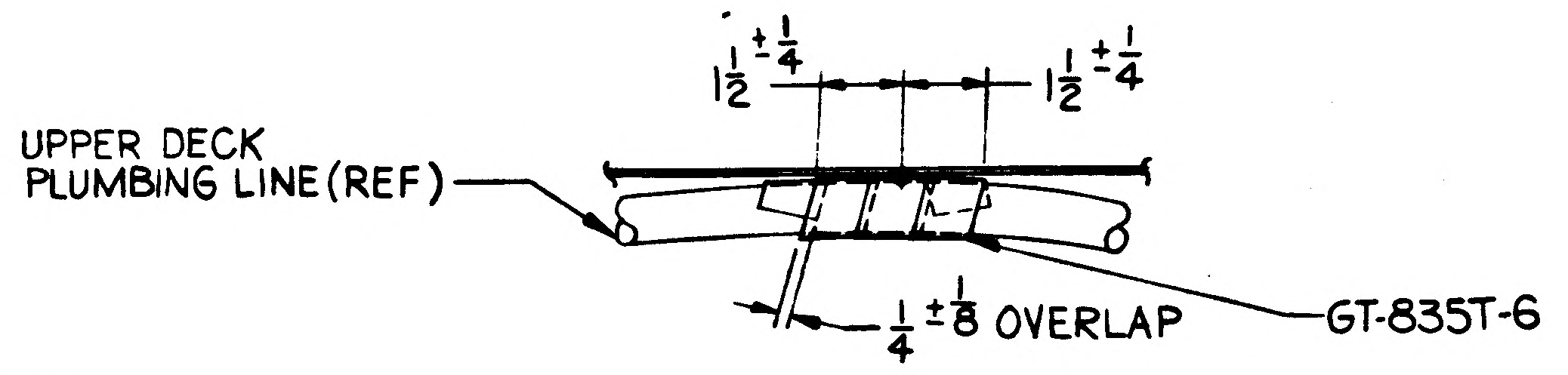

$1\frac{1}{2}\pm\frac{1}{4}$
$1\frac{1}{2}\pm\frac{1}{4}$
UPPER DECK PLUMBING LINE (REF)
$\frac{1}{4}\pm\frac{1}{8}$ OVERLAP
GT-835T-6

C7 DETAIL B
SCALE : NONE

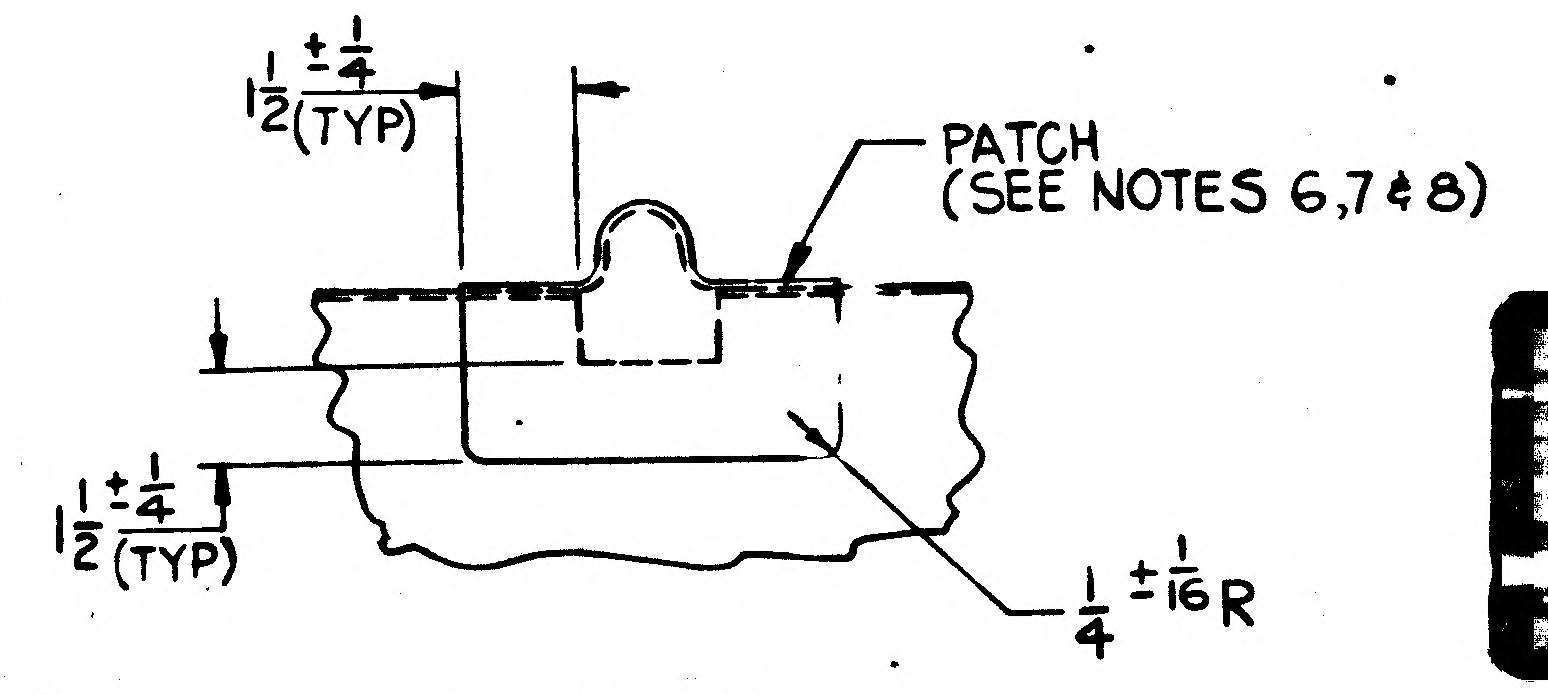

$1\frac{1}{2}\pm\frac{1}{4}$ (TYP)
PATCH (SEE NOTES 6,7 & 8)
$1\frac{1}{2}\pm\frac{1}{4}$ (TYP)
$\frac{1}{4}\pm\frac{1}{16}$R

C7 DETAIL A
SCALE : NONE

MANUFACTURING OPERATIONS
UNLESS OTHERWISE SPECIFIED
NOTES CHECKED ✓ APPLY TO THIS DWG.

PART NUMBER AND ALL OTHER MARKINGS IN REGION MARKED ⊠ USE BOTH SIDES IF NECESSARY.

FILLET AND INSIDE CORNER RADII TOLERANCES
.016R TO .062R ± .010
.063R TO .250R ± .015
OVER .250R ± .030

DEPTH SHOWN FOR TAPPED HOLES IS FULL THDS. 2-3 IMP THDS. BEYOND PERMISSIBLE.

EXTERNAL THREAD LENGTH SHOWN INCLUDES 2 IMPERFECT THREADS MAX.

DO NOT CADMIUM PLATE & PAINT HOLES OR SURFACES MARKED WITH DOUBLE ASTERISK.

MISMATCH STEP OF ± .005 PERMISSIBLE DUE TO CHANGE OF CUTTERS AT INSIDE INTERSECTING SURFACES.

DIAMETERS MARKED MUST BE CONCENTRIC WITHIN FULL INDICATOR READING

HOLES MUST BE KEPT FREE OF CHROME PLATING SOLUTION.

ALL DIMENSIONS SHOWN TO BE MET AFTER CADMIUM PLATING. THICKNESS OF PLATE .0003 MIN. TO .0005 MAX. MIN. THICKNESS TO BE .0002 ON THREADED AREAS. NO ALLOWANCE FOR PLATING IN HOLES

125 SURFACE ROUGHNESS INCLUDING REAMED HOLES PER MIL-STD-10

200 FOR ALL DRILLED HOLES

REMOVE ALL BURRS. BREAK ALL EDGES .015-.031

INSPECTION INFORMATION MINIMUM PERMISSIBLE AVERAGE EDGE DISTANCE MARKED IS

SYMBOL ✓ DENOTES SURFACE TO BE MACHINED

UNLESS OTHERWISE SPECIFIED TOLERANCE ON FLANGES IS ± 1/32

LENGTHS OF AN, NAS & MS AL ALY RIVETS SHORTER THAN 1 INCH ARE NOT SPECIFIED.

TOLERANCE ON LOFTED DELINEATIONS IS

DWG SIZE 34 X 66

PRINTING INFO ONLY
FULL SIZE SHEET AREA (36 X 76)- 19 SQ. FT.
1/2 SIZE SHEET AREA (1/4 OF FULL)- 4.7 SQ. FT.

PRINT TRIM LINE

NOTES:

1. WRAP PROTRUSION AS SHOWN ON LPC280-7

PENETRATION	LPC280-7	
	W	L
A	5	4
B	2	4
C	6	4
D	4	4
E	7	5
F	3	5
G	2	6
H	8	5
J	4	5

2. RUBBER STAMPED PART NUMBERS ON THE EXTERNAL SURFACES ARE TO BE REMOVED BY A HAND SOLVENT WIPE WITH ISOPROPYL ALCOHOL IN ACCORDANCE WITH LSP14-7011 PARA 3.4.2.
3. WHERE NECESSARY ON INSTL OF LDW280-23712 STANDOFFS, GR500A-4 MAY BE SUBSTITUTED FOR MS20470A3 PROVIDED EDGE DISTANCE OF 1 1/2 FASTENER DIA IS MAINTAINED.
4. FOR INSULATION BLANKET ABRASION PROTECTION, TAPE STRUCTURE WITH GT835P-8 TAPE PER LPC 280-27.
5. COVER ALL INSIDE MYLAR SURFACES OF BLANKETS WITH ONE LAYER OF ALUMINIZED POLYIMIDE IN ACCORDANCE WITH LPC280-31, .0005 THK, MAXIMUM AVAILABLE WIDTH.
6. MFD IN ACCORDANCE WITH LPC280-33
7. GARAN OR VOLAN STYLE 181 CLOTH POLYESTER RESIN LAMINAC 4146A WITH 1% LUCIDOL DDM WITH 0.1 % COBALT NAPHTHANATE (6%)(8 LAYERS). BOND PATCH WITH POLYESTER RESIN LAMINAC 4146A OR AS AN ALTERNATE USE EPON 934 & CURE RANGE I AS PER LSP-14-22500.
8. PATCHES TO MATCH CONTOUR OF REPAIR AREA.
9. THIS DWG AFFECTED BY THE FOLLOWING LFM. SEE LFM 99 FOR EFFECTIVITY & MODIFICATION

02/02

NAS 9-1100

GRUMMAN AIRCRAFT ENGRG CORP., BETHPAGE, L. I., NEW YORK

MODEL OR END ITEM	SIZE	CODE IDENT NO.		
LM	J	26512	LDW280-52553	C
	SCALE 1/20		SHEET 3.00	

C

LDW280-52553 SH 3

B

ENG 32.1 REV 3-65

GRUMMAN AIRCRAFT ENGINEERING CORP.
CODE IDENT NO. 26512
ENGINEERING ORDER

DWG. NO. LDW280-52553
EO NO. C1
CONTROL INFO NO. LDW280A7444

ON-1

LDW280-28646-17 WAS LDW280-28646-7

DETAIL SPEC REQ	☐	CL II ENGRG CHG	☑	CL I ENGRG CHG	☐

LCD 1173 5

REASON FOR EO: TO PROVIDE PROTECTION FOR EXPLOSIVE BOLT MECHANISM LCD 1173

DESCRIPTION OF EO: ON-1 LDW280-28646-17 WAS LDW280-28646-7

GAEC EO RELEASE C: JK 6/14/67

MODEL	EFFECTIVITY: PROCURING ACTIVITY NO.	GAEC UNIT NO.	SUB CONTR UNIT NO.
LM		LM-2 (32)	

DRAWING CHANGE REQD: REVISE DWG ✓ | RECORD EO

DISPOSITION OF PARTS: REWORK ✓ | SCRAP

APPROVED BY								
DATE	6/9/67			6/9/67	6/12/67		6/12/67	6/12/67
5	VD1	SUPPORT	RELIAB. GROUP	GROUP LEADER	STRESS GROUP	LIAISON ENGRG	PROJ ENGRG	~~COMP~~

PRIORITY	DRAWING TITLE	DRAWING NO.	EO NO.
C	SHIELD INSTL D/S THERMAL & BASE HEAT SHIELD	LDW280-52553	C1

ISSUED BY R. CLARK/J STRAKOSCH SECTION VD1 GROUP NO. 335 PL 25

01 NAS 9-1100

B

ENG 32.1 REV 3-65

GRUMMAN AIRCRAFT ENGINEERING CORP.
CODE IDENT NO. 26512
ENGINEERING ORDER *

DWG. NO. LDW280-52553
EO NO. C2
CONTROL INFO NO. LDW280A7436

ON -1 INSTL ADD LDW280-28731-11 TO REPLACE LDW280-28731-3
IN 1 PLACE ONLY AS SHOWN BELOW.
ADD LDW280-28731-7 TO REPLACE LDW280-28731-3
IN 7 PLACES AS SHOWN BELOW

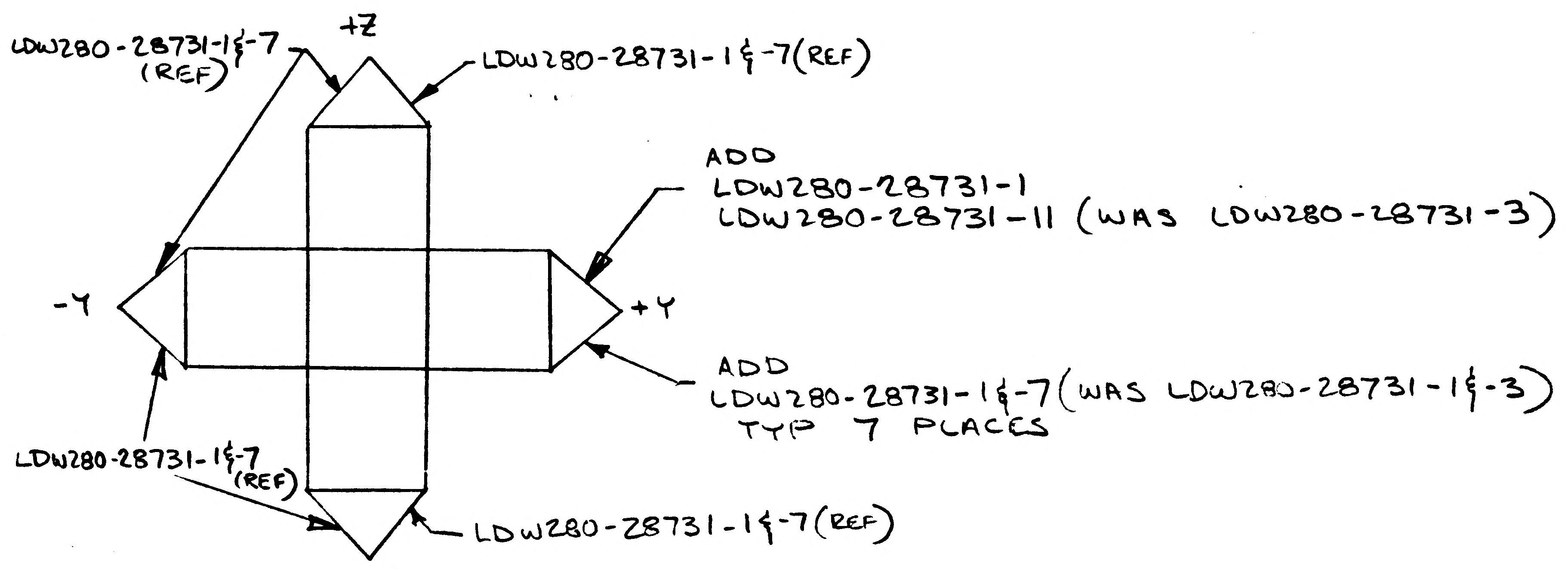
+Z
LDW280-28731-1&-7 (REF)
LDW280-28731-1&-7(REF)
ADD
LDW280-28731-1
LDW280-28731-11 (WAS LDW280-28731-3)
-Y
+Y
ADD
LDW280-28731-1&-7(WAS LDW280-28731-1&-3)
TYP 7 PLACES
LDW280-28731-1&-7 (REF)
LDW280-28731-1&-7(REF)
-Z

VIEW LOOKING DOWN

DETAIL SPEC REQ		CL II ENGRG CHG		CL I ENGRG CHG	✓	LCD 1220 CCA526. 5

REASON FOR EO: SUPPORT LM/SLA UMBILICAL CABLE LCD 1220

DESCRIPTION OF EO: ON -1 INSTL LDW280-28731-7(7) WAS LDW280-28731-3(7), LDW280-28731-11(1) WAS LDW280-28731-3(1)

Ⓡ GAEC EO RELEASE: e JK 6/19/7

MODEL	EFFECTIVITY		
	PROCURING ACTIVITY NO.	GAEC UNIT NO.	SUB CONTR UNIT NO.
LM		LM-2(32)	

DRAWING CHANGE REQD		DISPOSITION OF PARTS	
✓		✓	
REVISE DWG	RECORD EO	REWORK	SCRAP

APPROVED BY	JAP			JAB	WJH			
DATE	6/15/67			6/1?/67	6/?/67		6/16/67	6/?/67
✓	VDI	SUPPORT	RELIAB. GROUP	GROUP LEADER	STRESS GROUP	LIAISON ENGRG	PROJ ENGRG	

PRIORITY	DRAWING TITLE	DRAWING NO.	EO NO.
C	D.S. SHIELD INSTL THERMAL & BASE HT SHIELD	LDW280-52553	C2

ISSUED BY GEO BARNES/ J. STRAKOSCH X1153 SECTION VEH DES & INT GROUP NO. 335 PL 25

01

NAS 9-1100

ENG 32.2 REV 3-65 **FITH** B

GRUMMAN AIRCRAFT ENGINEERING CORP.
CODE IDENT NO. 26512
ENGINEERING ORDER

DWG NO. LDW280-52553
EO NO. C3
CONTROL INFO NO. LDW280A7318

IN B/M & FLD ADD TO -1:

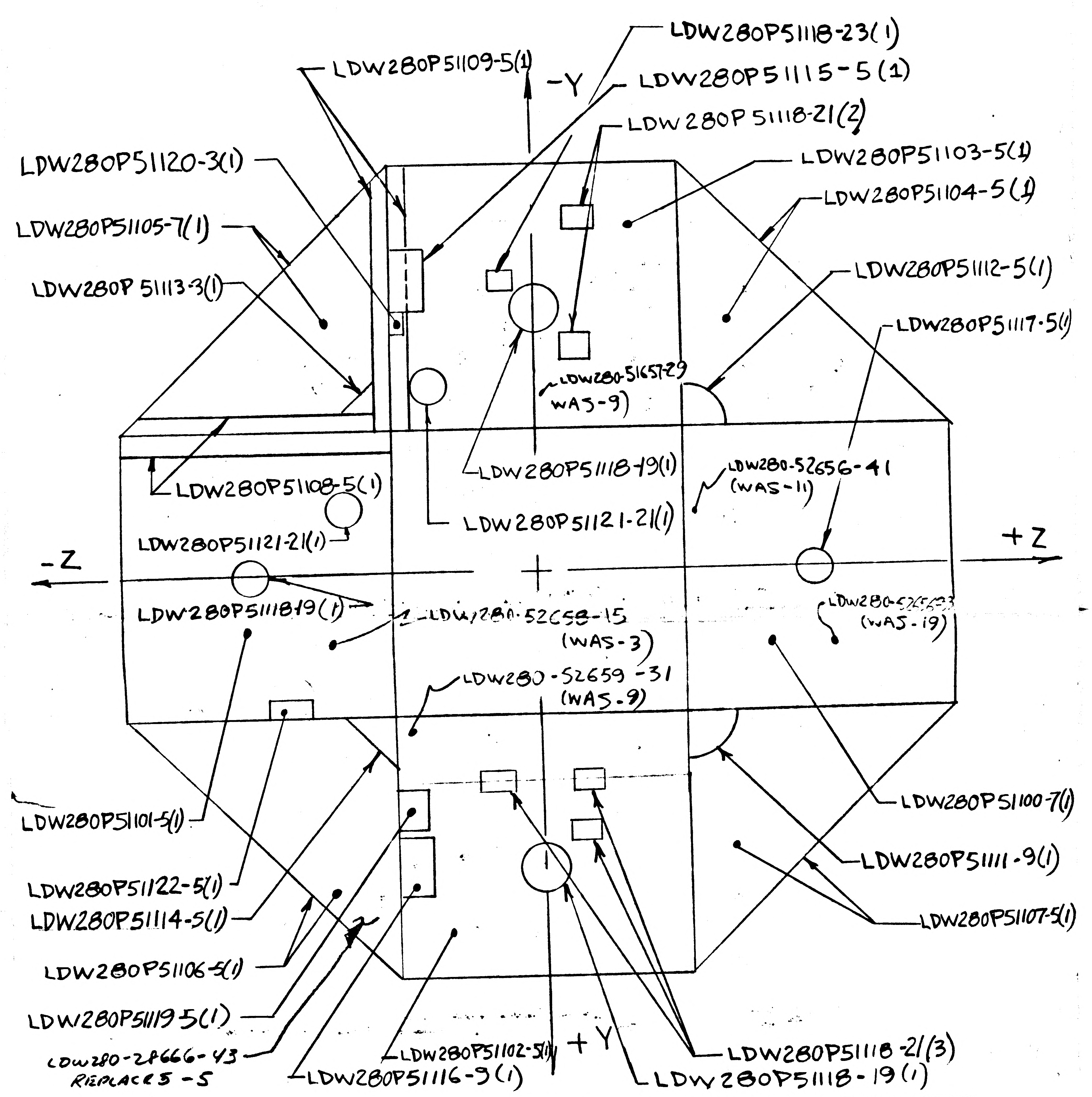
LDW280P51118-23(1)
LDW280P51109-5(1)
-Y
LDW280P51115-5(1)
LDW280P51118-21(2)
LDW280P51120-3(1)
LDW280P51103-5(1)
LDW280P51105-7(1)
LDW280P51104-5(1)
LDW280P51113-3(1)
LDW280P51112-5(1)
LDW280P51117-5(1)
LDW280-51657-29
(WAS-9)
LDW280P51118-19(1)
LDW280-52656-41
(WAS-11)
LDW280P51108-5(1)
LDW280P51121-21(1)
LDW280P51121-21(1)
-Z
+Z
LDW280P51118-19(1)
LDW280-52658-15
(WAS-3)
LDW280-52656-39
(WAS-19)
LDW280-52659-31
(WAS-9)
LDW280P51101-5(1)
LDW280P51100-7(1)
LDW280P51111-9(1)
LDW280P51122-5(1)
LDW280P51114-5(1)
LDW280P51107-5(1)
LDW280P51106-5(1)
LDW280P51119-5(1)
LDW280-28666-43
REPLACES -5
LDW280P51102-5(1)
+Y
LDW280P51118-21(3)
LDW280P51116-9(1)
LDW280P51118-19(1)

DESCRIPTION OF EO CONTD.
LDW280-52656-39(WAS-19) -41(WAS-11), LDW280-51657-29(WAS-9)
LDW280-52658-15(WAS-3), LDW280-52659-31(WAS-9)
LDW280-28666-43(WAS-5)

DETAIL SPEC REQ		CL II ENGRG CHG		CL I ENGRG CHG	✓	LCD-1244

REASON FOR EO: TO PROVIDE FOR FITH SHIELD

DESCRIPTION OF EO: ON -1
IN B/M & FLD ADDED LDW280P51100-7(1), P51101-5(1), P51102-5(1)
P51103-5(1), P51104-5(1), P51105-7(1) P51106-5(1), P51107-5(1), P51108-5(1), P51109-5(1) P51111-9(1)
P51112-5(1), P51113-3(1), P51114-5(1), P51115-5(1), P51116-9(1), P51117-5(1) P51118-19(3)
P51118-21(5), P51118-23(1), P51119-5(1) P51120-3(1) P51121-21(2), P51122-5(1)

GAEC EO RELEASE: JK 6/20/67 5c

MODEL	PROCURING ACTIVITY NO.	GAEC UNIT NO.	SUB CONTR UNIT NO.
LM		LM-2(32)	

DRAWING CHANGE REQD		DISPOSITION OF PARTS		APPROVED BY								
REVISE DWG	RECORD EO	REWORK	SCRAP									
✓		✓1		APPROVED BY	JAP			MES	WJB		Dam	
				DATE	6/12/67			6/12/67	9/13/67		9/5/67	6/19/67
				5	VDI	SUPPORT	RELIAB. GROUP	GROUP LEADER	STRESS GROUP	LIAISON ENGRG	PROJ ENGRG	~~GOVT~~

PRIORITY	DRAWING TITLE	DRAWING NO.	EO NO.
C	SHIELD INSTL D/S THERMAL & BASE HEAT	LDW280-52553	C3

ISSUED BY STEA/STRAKOSCH SECTION VDI GROUP NO. 335 PL 25

01
NAS 9-1100

B

ENG 32.1 REV 3-65

FITH

GRUMMAN AIRCRAFT ENGINEERING CORP.
CODE IDENT NO. 26512
ENGINEERING ORDER

*

DWG. NO. LDW280-52553
EO NO. C4
CONTROL INFO NO. LDW280A 7661

ON-1 LDW280-52635-7 REPLACES LDW280-52635-5
LDW280-51657-33 REPLACES LDW280-51657-29

DETAIL SPEC REQ ☐ CL II ENGRG CHG ☑ CL I ENGRG CHG ☐ LCD-1244 5

REASON FOR EO: TO PROVIDE FOR FITH SHIELD

DESCRIPTION OF EO: ON-1: LDW280-52635-7 REPLACED LDW280-52635-5, LDW280-51657-33 REPLACED LDW280-51657-29

Ⓡ GAEC EO RELEASE: e JK 4/26/7

MODEL	PROCURING ACTIVITY NO.	GAEC UNIT NO.	SUB CONTR UNIT NO.
LM		LM-2(32)	

DRAWING CHANGE REQD: REVISE DWG ✓ RECORD EO
DISPOSITION OF PARTS: REWORK ✓ -1 SCRAP

APPROVED BY								
DATE	6/23/67			6/23/67	6/2		6/24	6/26/67
	VDI	SUPPORT	RELIAB. GROUP	GROUP LEADER	STRESS GROUP	LIAISON ENGRG	PROJ ENGRG	~~CONT~~

PRIORITY: C
DRAWING TITLE: SHIELD INSTL D/S THERMAL & BASE HT.
DRAWING NO.: LDW280-52553
EO NO.: C4

ISSUED BY STEA/STRAKOSCH X1156 SECTION VDI GROUP NO. 335 PL 25

01 NAS 9-1100

ENG 32.1 REV 3-65

GRUMMAN AIRCRAFT ENGINEERING CORP.
CODE IDENT NO. 26512
ENGINEERING ORDER

DWG. NO. LDW280-52553
EO NO. C5
CONTROL INFO NO. LDW280A-7221

IN F/D & B/M FOR-1

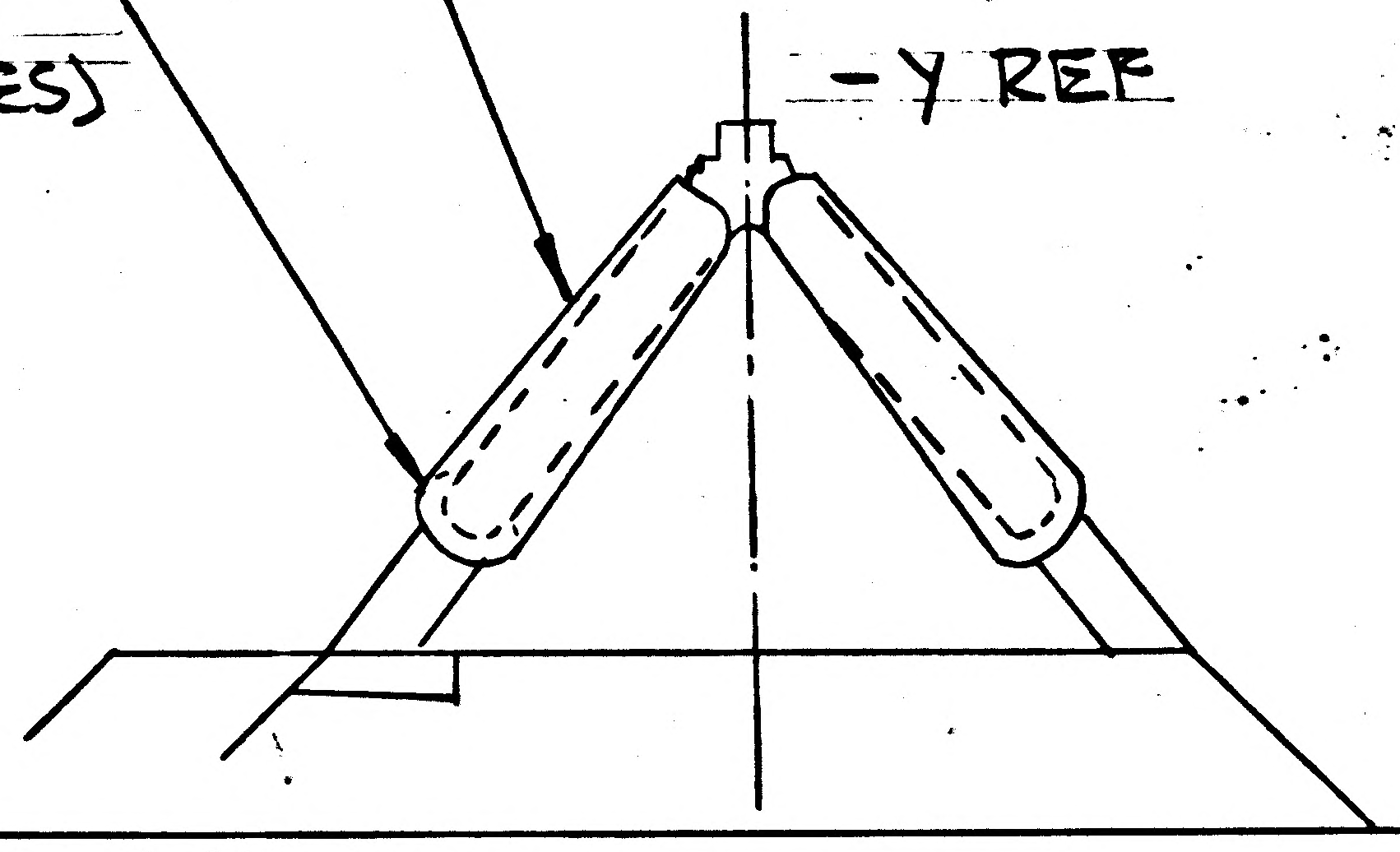

LDW280-28672-19 (TYP) 6 PLACES — WAS LDW280-28672-15 (TYP 8 PLACES)

LDW280-28672-15 (TYP 8 PLACES)
(WAS LDW280-28672-11) (TYP 8 PLACES)
LDW280-28672-16 (TYP 8 PLACES)
WAS LDW280-28672-12 (TYP 8 PLACES)

DETAIL SPEC REQ		CL II ENGRG CHG	/	CL I ENGRG CHG	✓	LCD 1220 ok CCA 526

REASON FOR EO: CORRECT N/A DASH No's & QUANTITIES

DESCRIPTION OF EO: IN F/D & B/M FOR-1 REMOVED LDW280-28672-11 & 12 ADDED LDW280-28672-16 & -19

GAEC EO RELEASE: C JL 7-11

MODEL	PROCURING ACTIVITY NO.	GAEC UNIT NO.	SUB CONTR UNIT NO.
LM		LM-2 (32)	

DRAWING CHANGE REQD: REVISE DWG	RECORD EO	DISPOSITION OF PARTS: REWORK	SCRAP
✓		✓	

APPROVED BY	gap			JAS	W		Dam	Batts
DATE	5/26/67			5/25/67	5/26/67		5/27/67	7-11-67
2	VDI	SUPPORT	RELIAB. GROUP	GROUP LEADER	STRESS GROUP	LIAISON ENGRG	PROJ ENGRG	GOVT

PRIORITY	DRAWING TITLE	DRAWING NO.	EO NO.
C	SHIELD INSTL DES STAGE THERMAL & BASE HEAT SHIELD	LDW280-52553	C5

ISSUED BY G. ZEMAN / J. STRAHOSCH SECTION VDI GROUP NO. 335 PL 29

01

NAS 9-1100

B

ENG 32.2 REV 3-65

HITH

GRUMMAN AIRCRAFT ENGINEERING CORP.
CODE IDENT NO. 26512
ENGINEERING ORDER

DWG. NO. LDW280-52553 | EO NO. C
CONTROL INFO NO. LDW280A7799

ON - 1:

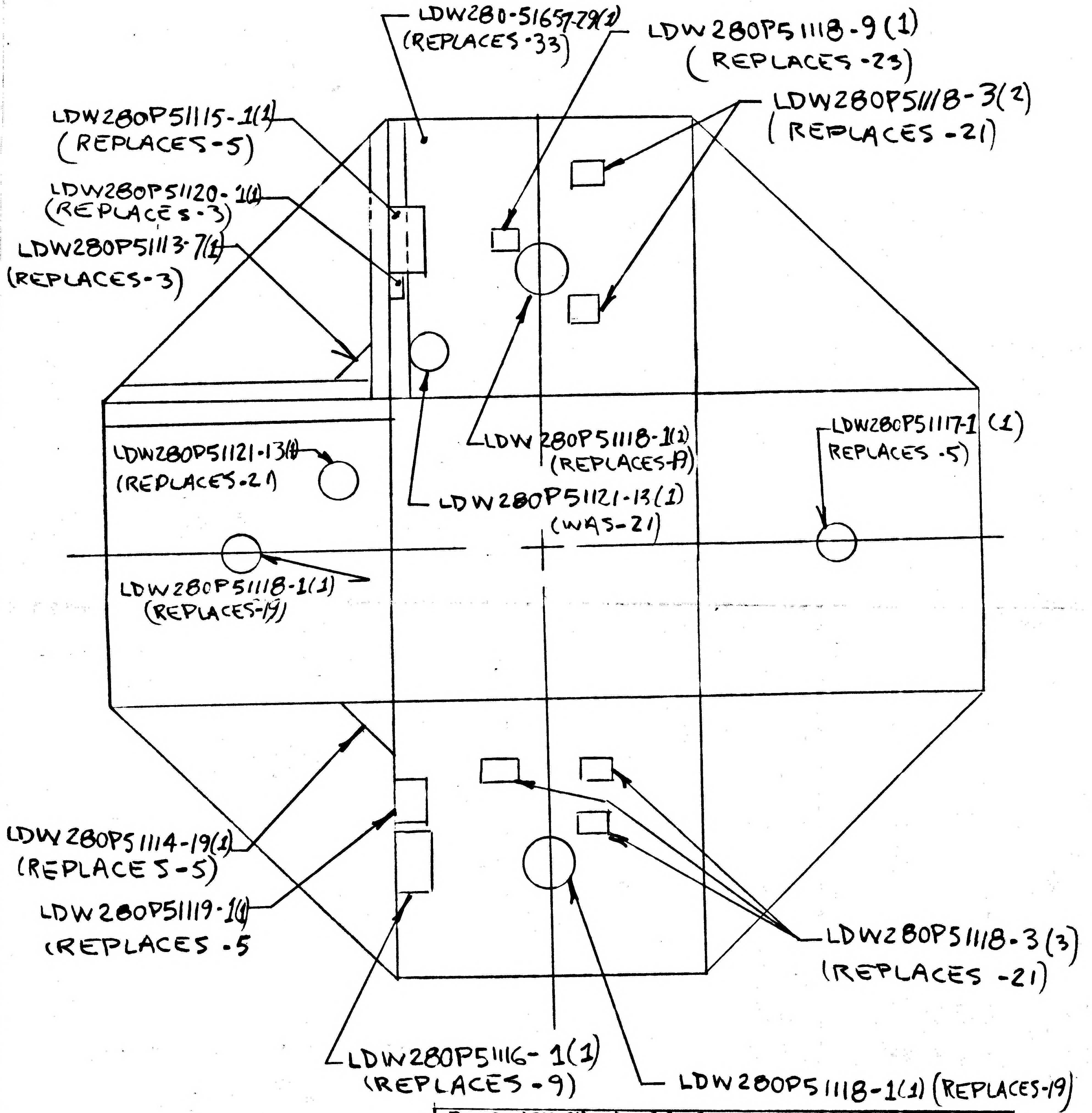
LDW280-51657-29(1)
(REPLACES-33)
LDW280P51118-9 (1)
(REPLACES-23)
LDW280P51118-3(2)
(REPLACES -21)
LDW280P51115-1(1)
(REPLACES-5)
LDW280P51120-1(1)
(REPLACES-3)
LDW280P51113-7(1)
(REPLACES-3)
LDW280P51118-1(1)
(REPLACES-19)
LDW280P51121-13(1)
(WAS-21)
LDW280P51117-1 (1)
REPLACES -5)
LDW280P51121-13(1)
(REPLACES-21)
LDW280P51118-1(1)
(REPLACES-19)
LDW280P51114-19(1)
(REPLACES-5)
LDW280P51119-1(1)
(REPLACES -5
LDW280P51118-3(3)
(REPLACES -21)
LDW280P51116-1(1)
(REPLACES-9)
LDW280P51118-1(1) (REPLACES-19)

DESCRIPTION OF E.O. CONTD.
LDW280P51118-9(REPLACED-21) LDW280P51119-1
(REPLACED-5) LDW280P51120-1(REPLACED-3)
LDW280P51121-13(REPLACED-21)

DETAIL SPEC REQ		CL II ENGRG CHG		CL I ENGRG CHG	✓	LCD-1244

REASON FOR EO
TO PROVIDE FOR FITH SHIELD

DESCRIPTION OF EO
ON-1
LDW280-51657-29(1)(REPLACED-33) LDW280P51113-7(1)(REPLACED-3),
LDW280P51114-19(1)(REPLACED-5) LDW280P51115-1(REPLACED-5),
LDW280P51116-1 (REPLACED-9) LDW280P51117-1(REPLACED-5)
LDW280P51118-1(REPLACED-19; LDW280P51118-3(REPLACED-21)

Ⓡ GAEC EO RELEASE C
JL 7-13-7

MODEL	PROCURING ACTIVITY NO.	GAEC UNIT NO.	SUB CONTR UNIT NO.
LM		LM-2(32)	

DRAWING CHANGE REQD		DISPOSITION OF PARTS	
REVISE DWG	RECORD EO	REWORK	SCRAP
✓		✓	

APPROVED BY								
DATE	7/11/67			7/10/67	7/11/67		7/11/67	7/13/67
	VDI	SUPPORT	RELIAB. GROUP	GROUP LEADER	STRESS GROUP	LIAISON ENGRG	PROJ ENGRG	

PRIORITY	DRAWING TITLE	DRAWING NO.	EO NO.
C	SHIELD INSTL DIS THERMAL & BASE HEAT	LDW280-52553	C6

ISSUED BY STEA/STRAKOSCH X1156 SECTION VDI GROUP NO. 335 PL 25

01 NAS 9-1100

RELEASED BY LIAISON

GRUMMAN AIRCRAFT ENGINEERING CORP.
CODE IDENT NO. 26512
ENGINEERING ORDER

DWG. NO. LDW280-52553		EO NO. C7
CONTROL INFO. NO. LM 5-13687		

BHG 32.2 REV 3-65

ON-1 ADD DETAILS & NOTES AS SHOWN & NOTED

RELEASED BY LIAISON

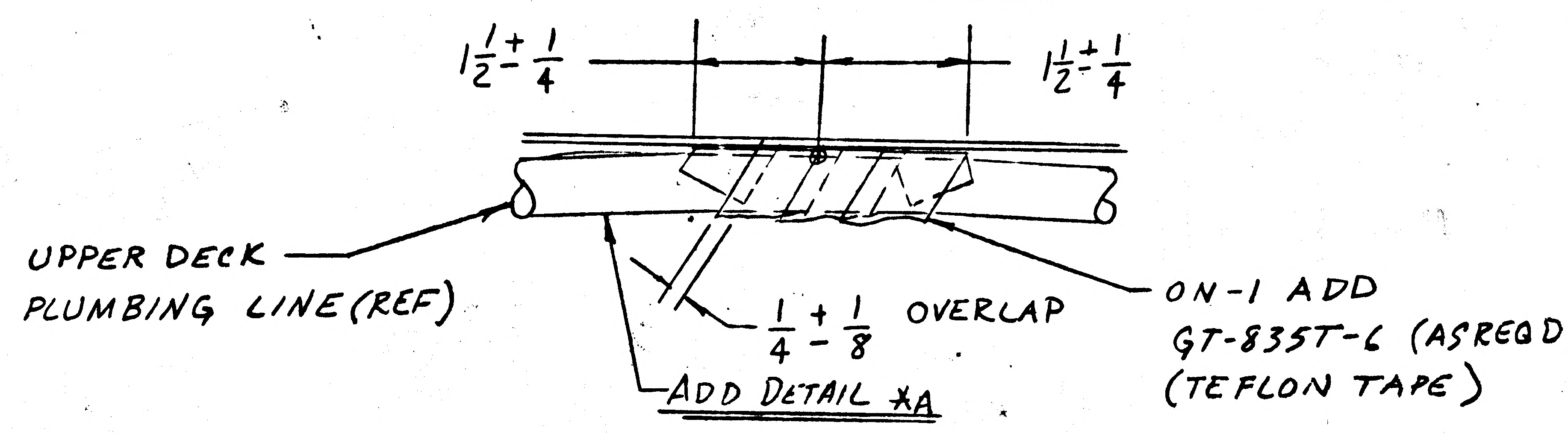

$1\frac{1}{2}\pm\frac{1}{4}$
$1\frac{1}{2}\pm\frac{1}{4}$
UPPER DECK PLUMBING LINE (REF)
$\frac{1}{4}\pm\frac{1}{8}$ OVERLAP
ON-1 ADD GT-835T-6 (AS REQD) (TEFLON TAPE)

ADD DETAIL *A

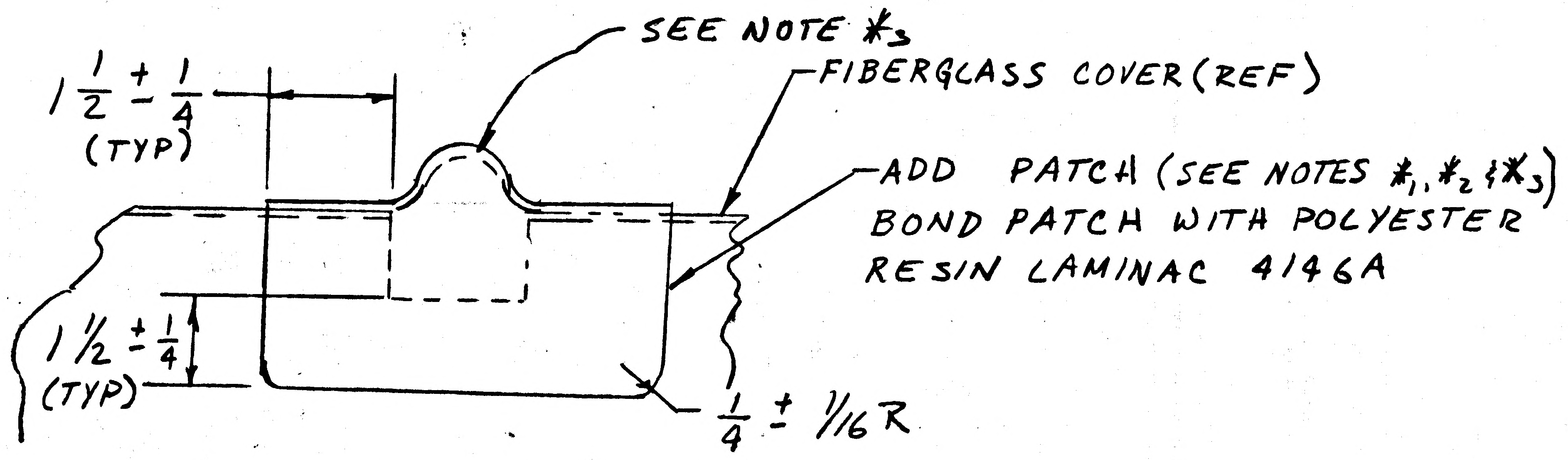

SEE NOTE *3
FIBERGLASS COVER (REF)
$1\frac{1}{2}\pm\frac{1}{4}$ (TYP)
ADD PATCH (SEE NOTES *1, *2 & *3)
BOND PATCH WITH POLYESTER RESIN LAMINAC 4146A
$1\frac{1}{2}\pm\frac{1}{4}$ (TYP)
$\frac{1}{4}\pm\frac{1}{16}$R

ADD DETAIL *B

ADD:

NOTES *1-MANUF. IN ACCORDANCE WITH LPC280-33
*2-GARAN OR VOLAN STYLE 181 CLOTH POLYESTER RESIN LAMINAC 4146A WITH 1% LUCIDOL DDM WITH 0.1% COBALT NAPHTHANATE (6%). (8 LAYERS)
*3-PATCHES TO MATCH CONTOUR OF REPAIR AREA.

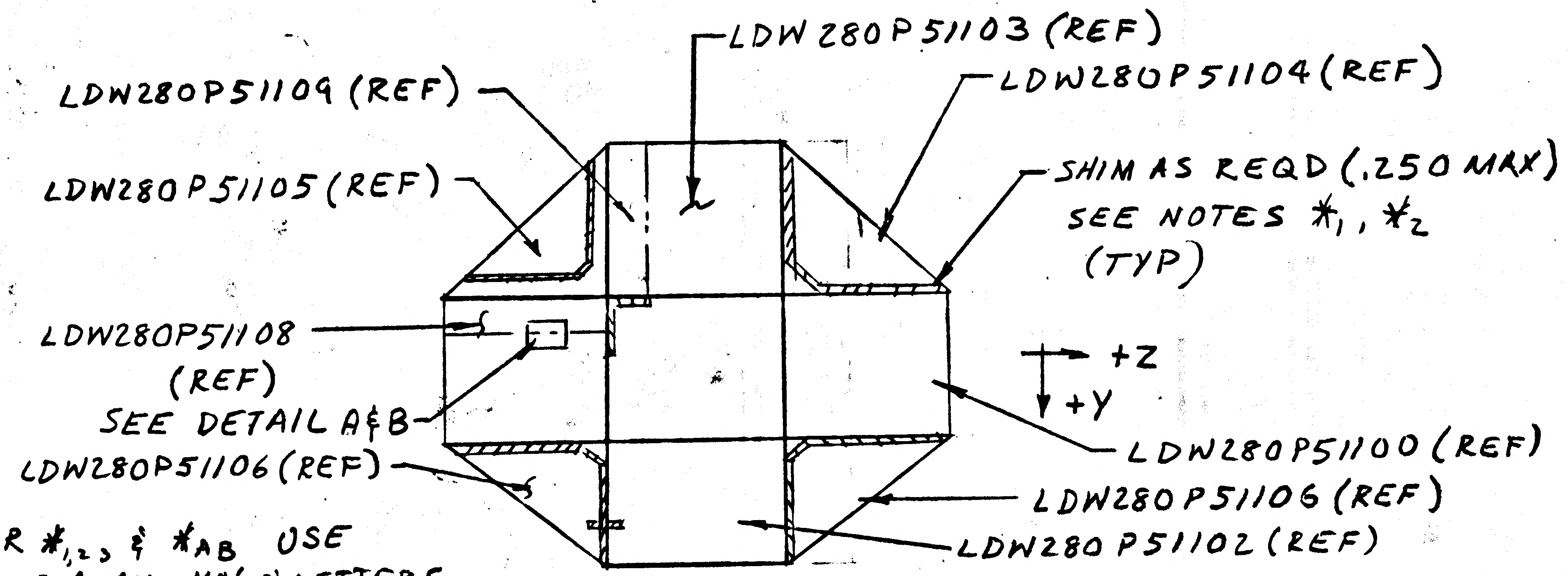

LDW280P51103 (REF)
LDW280P51109 (REF)
LDW280P51104 (REF)
LDW280P51105 (REF)
SHIM AS REQD (.250 MAX) SEE NOTES *1, *2 (TYP)
LDW280P51108 (REF)
SEE DETAIL A&B
+Z
+Y
LDW280P51106 (REF)
LDW280P51100 (REF)
LDW280P51106 (REF)
LDW280P51102 (REF)

FOR *1,2,3 & *A,B USE NEXT AVAIL. NO'S & LETTERS.

DETAIL SPEC REQ		CL II ENGRG CHG		CL I ENGRG CHG	✓	LCD 1244

REASON FOR EO: PRECLUDE CHAFING BETWEEN PLUMBING LINES & FIBERGLASS COVERS, PROVIDE MEANS OF REPAIRING COVERS, CRACKING OF FLANGES

DESCRIPTION OF EO: ON-1 ADDED GT835-T6 (AS REQD), DETAIL'S *A & *B, NOTES *1,2 & 3 & SHIMS AS REQD (.250) MAX.

GAEC EO RELEASE

MODEL	PROCURING ACTIVITY NO.	GAEC UNIT NO.	SUB CONTR UNIT NO.
LM		LM 2 (32)	

DRAWING CHANGE REQD: REVISE DWG ✓ RECORD EO
DISPOSITION OF PARTS: REWORK ✓ SCRAP

	APPROVED BY		SUPPORT	RELIAB. GROUP	GROUP LEADER	STRESS GROUP	LIAISON ENGRG	PROJ ENGRG	GOVT
APPROVED BY	JAP				—	WH	CH	JAP	
DATE	11/27/67	VDI			—	11/20/67	11-21-67	11/27/67	11-21-67

PRIORITY: C
DRAWING TITLE: SHIELD INSTL D/S-THER & BASE HEAT
DRAWING NO. LDW280-52553
EO NO. C7

ISSUED BY DON RAGAS X1153 SECTION VDI GROUP NO. 335 PL. 5

GRUMMAN AIRCRAFT ENGINEERING CORP.
CODE IDENT NO. 26512

ENGINEERING ORDER

ENG 32.1 REV 3-65

DWG. NO. LDW280-52553	EO NO. C8
CONTROL INFO NO. LM5-13705	

ON -1 ADD LDW280P51116-7 INSTL
WAS
-1 INSTL

RELEASED BY LIAISON

DETAIL SPEC REQ ☐	CL II ENGRG CHG ☐	CL I ENGRG CHG ☑	LCD 1244 CCA667 ⑤

REASON FOR EO	DESCRIPTION OF EO	GAEC EO RELEASE
TO ELIMINATE INTERFERENCE WITH DISCONNECT LINES	ON -1 ADDED LDW280P51116-7 WAS -1	JK

MODEL	EFFECTIVITY PROCURING ACTIVITY NO.	EFFECTIVITY GAEC UNIT NO.	EFFECTIVITY SUB CONTR UNIT NO.
LM		LM2 (32)	

DRAWING CHANGE REQD		DISPOSITION OF PARTS	
REVISE DWG ✓	RECORD EO	REWORK ✓	SCRAP

	VDI	SUPPORT	RELIAB. GROUP	GROUP LEADER	STRESS GROUP	LIAISON ENGRG	PROJ ENGRG	GOVT
APPROVED BY	JAP			—		DV	JAP	
DATE	12/1/67			—	12/1/67	12/1	12/1/67	12-1-67

PRIORITY	DRAWING TITLE	DRAWING NO.	EO NO.
C	SHIELD INSTL D/S - UPPER DECK	LDW280-52553	C8

ISSUED BY DON RAGAS X1724 SECTION VDI GROUP NO. 335 PL 5

01

NAS 9-1100

ENG 32.1 REV 3-65

GRUMMAN AIRCRAFT ENGINEERING CORP.
CODE IDENT NO. 26512
ENGINEERING ORDER

DWG. NO. LDW280-52553
EO NO. C9
CONTROL INFO NO. LM-27-419

REF EO C7

REVISE BONDING NOTE TO READ:

BOND PATCH WITH POLYESTER RESIN LAMINAC 4146A OR AS AN ALTERNATE USE EPON 934 & CURE RANGE I AS PER LSP-14-22500.

(ADDED EPON 934 & CURE RANGE I AS PER LSP-14-22-500)

DETAIL SPEC REQ	☐	CL II ENGRG CHG	☐	CL I ENGRG CHG	✓	LCD 1244

(27)

REASON FOR EO: PRECLUDE CHAFING BETWEEN PLUMBING LINES & F/G COVERS, PROVIDE MEANS OF REPAIRING COVERS & CRACKING FLANGES. (FACILITATE MANUF)

DESCRIPTION OF EO: REF EO C7 "ADDED TO BOND NOTE "EPON 934 CURE RANGE I PER LSP-14-22.500."

② GAEC EO RELEASE: 27 020

MODEL	EFFECTIVITY: PROCURING ACTIVITY NO.	GAEC UNIT NO.	SUB CONTR UNIT NO.
LM		LM2(32)	

DRAWING CHANGE REQD: REVISE DWG	RECORD EO	DISPOSITION OF PARTS: REWORK	SCRAP	APPROVED BY / DATE		SUPPORT	RELIAB. GROUP	GROUP LEADER	STRESS GROUP	LIAISON ENGRG	PROJ ENGRG	~~[illegible]~~
✓		NOT	RECLD	3	12/1/67 VDI				11-30-67	12-1-67	12/1/67	1-2-68

PRIORITY	DRAWING TITLE	DRAWING NO.	EO NO.
C27	SHIELD INSTL D/S - THER & BASE HEAT	LDW 280-52553	C9

ISSUED BY LIAISON "B" WALLACE 1921 84043 SECTION VDI GROUP NO. 335 PL 5

01

NAS 9-1100

GRUMMAN AIRCRAFT ENGINEERING CORP.
CODE IDENT NO. 26512

ENGINEERING ORDER

ENG 32.1 REV 3-65

DWG. NO. LDW280-52553

EO NO. C10

CONTROL INFO NO. LDW280B1051

ON-1

ADD LDW280-28672-37, REMOVE-LDW280-28672-19

LFM

DETAIL SPEC REQ		CL II ENGRG CHG		CL I ENGRG CHG	✓ LCD 2525

(5)

REASON FOR EO: ADDITIONAL VENT AREA REQD

DESCRIPTION OF EO: ON-1 ADDED LDW 280-28672-37, REMOVED LDW 280-28672-19

GAEC EO RELEASE: 1/4/8

MODEL	PROCURING ACTIVITY NO.	GAEC UNIT NO.	SUB CONTR UNIT NO.
LM		LM2 (32)	
		LFM 99	

DRAWING CHANGE REQD: REVISE DWG ✓ RECORD EO

DISPOSITION OF PARTS: REWORK ✓ SCRAP

APPROVED BY		RAH			WJM			
DATE	1/3/68	1/3/68		1-3-68	1/3/68		1-3-68	1-3-68
P	VDI	SUPPORT	RELIAB. GROUP	GROUP LEADER	STRESS GROUP	LIAISON ENGRG	PROJ ENGRG	

PRIORITY: C

DRAWING TITLE: SHIELD INSTL D/S - THERMAL

DRAWING NO.: LDW280-52553

EO NO.: C10

010368

ISSUED BY DON RAGAS X1153 SECTION VDI GROUP NO. 280 PL. 25

01 NAS 9-1100

ENG 32.1 REV 3-65

GRUMMAN AIRCRAFT ENGINEERING CORP.
CODE IDENT NO. 26512
ENGINEERING ORDER

DWG. NO. LDW280-52553		EO NO. D1
CONTROL INFO NO. LDW280 B1929		

REF OF EO C10

ON-1 (ADD) LDW280-28672-37 REMOVE LDW280-28672-19

(ADD) LDW280-28672-39 REMOVE LDW280-28672-23
LDW280-28672-41 REMOVE LDW280-28672-25

DETAIL SPEC REQ	☐	CL II ENGRG CHG	☐	CL I ENGRG CHG	✓	LCD 2525

(5)

REASON FOR EO
ADDITIONAL VENT AREA REQD. TO AGREE WITH EO AGAINST LDW280-28672 ANS RTE 05131-357

DESCRIPTION OF EO
ON-1 ADDED LDW280-28672-39 AND -41 & -37
REMOVED LDW280-28672-23 AND -25 & -19

GAEC EO RELEASE: JK 2/6/68

MODEL	PROCURING ACTIVITY NO.	GAEC UNIT NO.	SUB CONTR UNIT NO.
LM		LM 2 (32)	

DRAWING CHANGE REQD: REVISE DWG ✓ | RECORD EO
DISPOSITION OF PARTS: REWORK ✓ | SCRAP

APPROVED BY	P	SUPPORT	RELIAB. GROUP	GROUP LEADER	STRESS GROUP	LIAISON ENGRG	PROJ ENGRG	
APPROVED BY								
DATE	1/31/68			1-31-68	2/2/68		1/31/68	2-5-68
	VDI							

PRIORITY	DRAWING TITLE	DRAWING NO.	EO NO.
C	SHIELD INSTL D/S THERMAL	LDW280-52553	D1

2/9/68
ISSUED BY J. GRASSIANO X86755 SECTION VDI GROUP NO. 280 PL 25

01

NAS 9-1100

ENG 32.1 REV 3-65

GRUMMAN AIRCRAFT ENGINEERING CORP.
CODE IDENT NO. 26512
ENGINEERING ORDER

DWG. NO. LDW280-52553
EO NO. D2
CONTROL INFO NO. LDW280B2185

ON -3 INST'L

REMOVE LDW280-28727-70-8 (4 EACH REQ'D/ASSY)

DETAIL SPEC REQ		CL II ENGRG CHG		CL I ENGRG CHG	✓ LCD 2223, CCA 745 PKG7 ⑤

REASON FOR EO	DESCRIPTION OF EO	GAEC EO RELEASE
LM-2 - UNMANNED	ON -3, REMOVED LDW280-28727-70-8 (4 EACH REQ'D/ASS'Y)	JK 2/14/68

MODEL	EFFECTIVITY		
	PROCURING ACTIVITY NO.	GAEC UNIT NO.	SUB CONTR UNIT NO.
LM		LM-2(32)	

DRAWING CHANGE REQD		DISPOSITION OF PARTS		APPROVED BY								
				DATE	2/13/68			2/13/68	NM 2/13/68		2/13/68	2/14/68
REVISE DWG	RECORD EO	REWORK	SCRAP									
✓		✓		P	VDI	SUPPORT	RELIAB. GROUP	GROUP LEADER	STRESS GROUP	LIAISON ENGRG	PROJ ENGRG	GOVT

PRIORITY	DRAWING TITLE	DRAWING NO.	EO NO.
C	SHIELD INST'L -D/S- THERMAL & BASE HEAT	LDW280-52553	D2

237EB68
ISSUED BY J. BACKOFEN/P. THORJUSEN X1153 SECTION VEH. DES. INT. GROUP NO. 335 PL 25

01 NAS 9-1100

LDW280-52570 A

MODEL OR END ITEM	NEXT ASSY	MODULE OR SER NO.	REQD PER MODULE OR END ITEM
LEM	LDW280-52528	LEM-3(33)	1
LEM	LDW280-52528	LEM-2(32)	1

PART NO. LDW280-52570-1

GAEC SCH NO. 51-4

SH REV STATUS: FOR DESCRIPTION OF REV SEE SUBQ SH									
SHEET	1.00	1.10	2.00	201	2.02	2.03	2.04	3.00	4.00
REV	A	A	A				A	A	A
SHEET	5.00								
REV	A								
SHEET									
REV									

LAST SECT LTR USED V

LAST DASH NO. USED -1

GRUMMAN REL INFO			
PRIM NO.	VE(001)		
207	MP	7-6-6	X

UNLESS OTHERWISE SPECIFIED DIMENSIONS ARE IN INCHES.
TOLERANCE UNLESS SPECIFIED
FRACTIONS - DECIMALS - ANGLES
± 1/32 ± .020 ± 1/2°

ORIG DWG AUTH
DETAIL SPEC REQUIREMENT
CLASS II ENGRG CHANGE
CLASS I ENGRG CHANGE

CONTRACT NO. NAS-9-1100

DRAWN BY Castellano 6-14-66
LAYOUT BY QUEVEDO/ROGERS
CHECKED BY F 6-20-66
GR LEADER 6/27/66
VEH DES INT 6/29
STRUCTURES 7/1/66
STRUCTURES 7-5
WEIGHTS 7-12

RELIABILITY
PROJ ENGR Plunkett 13 July
REL GROUP Both 7-14-66

LINE ITEM I

DOCUMENTATION TYPE II

GRUMMAN AIRCRAFT ENGRG CORP
BETHPAGE, L. I., NEW YORK

COLD RAIL INSTALLATION
DESCENT STAGE-RH FWD BEAM PNL-
EPS & EDBS & EPS. ECA SPT

SIZE B CODE IDENT NO. 26512 LDW280-52570 A

SCALE NONE SHEET 1.00 OF 10

ENG 77.1 12-65

01

NAS 9-1100

REVISIONS FOR CONTINUATION OF REVISIONS SEE SHEET ______

CHANGE LTR	ITEM NO.	SHEET NO.	ZONE	GRUMMAN INFO ONLY	DET SPEC	CLASS I	CLASS II	ENGRG ORDER	DESCRIPTION	EFFECTIVITY	DISPOSITION OF EXISTING PARTS		CHANGED BY AND DATE	ENGRG APPD	GOVT APPD
											REWORK	SCRAP			
A	1	1.00, 1.10 2.00, 3.00, 4.00					✓	EOA1	ON SH. # 3 & 4 TO -1 INSTL, ADDED LDW280-18054-11, MS20470-DD4(3) & DRILL 3/8 (.374 -.381) SH. 1 OF 10 WAS SH. 1 OF 9 ADDED SH. 1.10	LEM-2 LEM-3	✓	RL	B. YANOFF 9-19-66		
	2	1.10, 2.04 5.00						EO-A2	Ⓡ ON-1, IN B/M ADDED: GF510C-6-4(4), GF510A-6-4(4) WAS (2) IN FIELD, GF510A-6-4(1) & GF510C-6-4(1) WAS GF510A-6-4(2) ADDED: MIN. ED. FOR LDW280-17670-13.	LEM-2,-3	✓	S.J.	LAMBERT 10-3-66		

CHG APPROVED

LTR	GROUP LDR	VDI	STRUCTURES	STRUCTURES	WEIGHTS	RELIABILITY					
A											

GRUMMAN AIRCRAFT ENGRG CORP., BETHPAGE, L. I., NEW YORK

SIZE	CODE IDENT NO.		
B	26512	LDW280-52570	A
SCALE NONE		SHEET 1.10	

ENG 77.16 3-66

01

NAS 9-1100

QTY PER ASSEMBLY -1	CODE IDENT	PART NO.	I&T	NOMENCLATURE OR DESCRIPTION	MATERIAL	GOVT SPEC	COML SPEC	STOCK SIZE	PROCESS SYM	FINISH NO.	ZONE
1		LDW280-17668-17	E	STRAP	SEE DWG						9B
2		-15		DOUBLER							9A
1		-13		DOUBLER							2B
2		LDW280-17668-11		STRAP							9A
1		LDW280-17667-17		ANGLE							2A
1		-15									2B
1		-13									2B
6		-12									6B
6		LDW280-17667-11		ANGLE							8B
4		LDW280-17666-14		ANGLE							6C
4		LDW280-17666-13		ANGLE							5C
4		LDW280-17666-11		BRACKET							5A
1		LDW280-18054-11		DOUBLER							6F
1		LDW280-17665-19		SPACER							9B
1		-17		SPACER							9B
1		-15		SPACER							9B
1		-13		ANGLE							2B
2		LDW280-17665-11		ANGLE							2B
2		LDW280-17661-11		CAP	SEE DWG						5B
		LDW280-52570-1	E	COLD RAIL INSTL					NONE	NONE	

SYM OR NO.	PROCESS OR FINISH	GRUMMAN SPEC OR MILITARY SPEC	SYM OR NO.	PROCESS OR FINISH	GRUMMAN SPEC OR MILITARY SPEC	SYM OR NO.	PROCESS OR FINISH	GRUMMAN SPEC OR MILITARY SPEC

I&T: IDENTIFICATION AND TRACEABILITY IN ACCORDANCE WITH : NONE

GRUMMAN AIRCRAFT ENGRG CORP, BETHPAGE, L. I., NEW YORK

SIZE	CODE IDENT NO.		
B	26512	LDW280-52570	A
SCALE NONE		SHEET 2.00	

ENG 77.2 7-65

01

NAS 9-1100

QTY PER ASSEMBLY -1	CODE IDENT	PART NO.	I&T	NOMENCLATURE OR DESCRIPTION	MATERIAL	GOVT SPEC	COML SPEC	STOCK SIZE	PROCESS SYM	FINISH NO.	ZONE
AS REQ'D		SEE NOTE #8	E	SHIM							
2		MS21042L4		NUT	STD PART						
		MS20470AD5		RIVET							
		MS20470DD4									
		MS20470AD4									
		MS20426 DD4									
		NAS1097-DD4		RIVET							
2		NAS1085-D5		COLLAR							
2		NAS1525-5		BOLT							
1		NAS674-6		BOLT							
1		NAS674-3		BOLT	STD PART						
4		GF510A-6-4		RIVET BLIND	GRUMMAN STD						
4		GF510C-6-4									
3		GR500A-4G									
13		GR500A-4F									
18		GR500A-4E									
211		GR500A-4D									
86		GR500A-4C									
3		GR500A-4B	E	RIVET BLIND	GRUMMAN STD						

SYM OR NO.	PROCESS OR FINISH	GRUMMAN SPEC OR MILITARY SPEC	SYM OR NO.	PROCESS OR FINISH	GRUMMAN SPEC OR MILITARY SPEC	SYM OR NO.	PROCESS OR FINISH	GRUMMAN SPEC OR MILITARY SPEC

I&T: IDENTIFICATION AND TRACEABILITY IN ACCORDANCE WITH : NONE

GRUMMAN AIRCRAFT ENGRG CORP, BETHPAGE, L. I., NEW YORK

SIZE	CODE IDENT NO.		
B	26512	LDW280-52570	A
SCALE NONE			SHEET 2.04

ENG 77.2 7-65

01 NAS 9-1100

01/02 NAS 9-1100

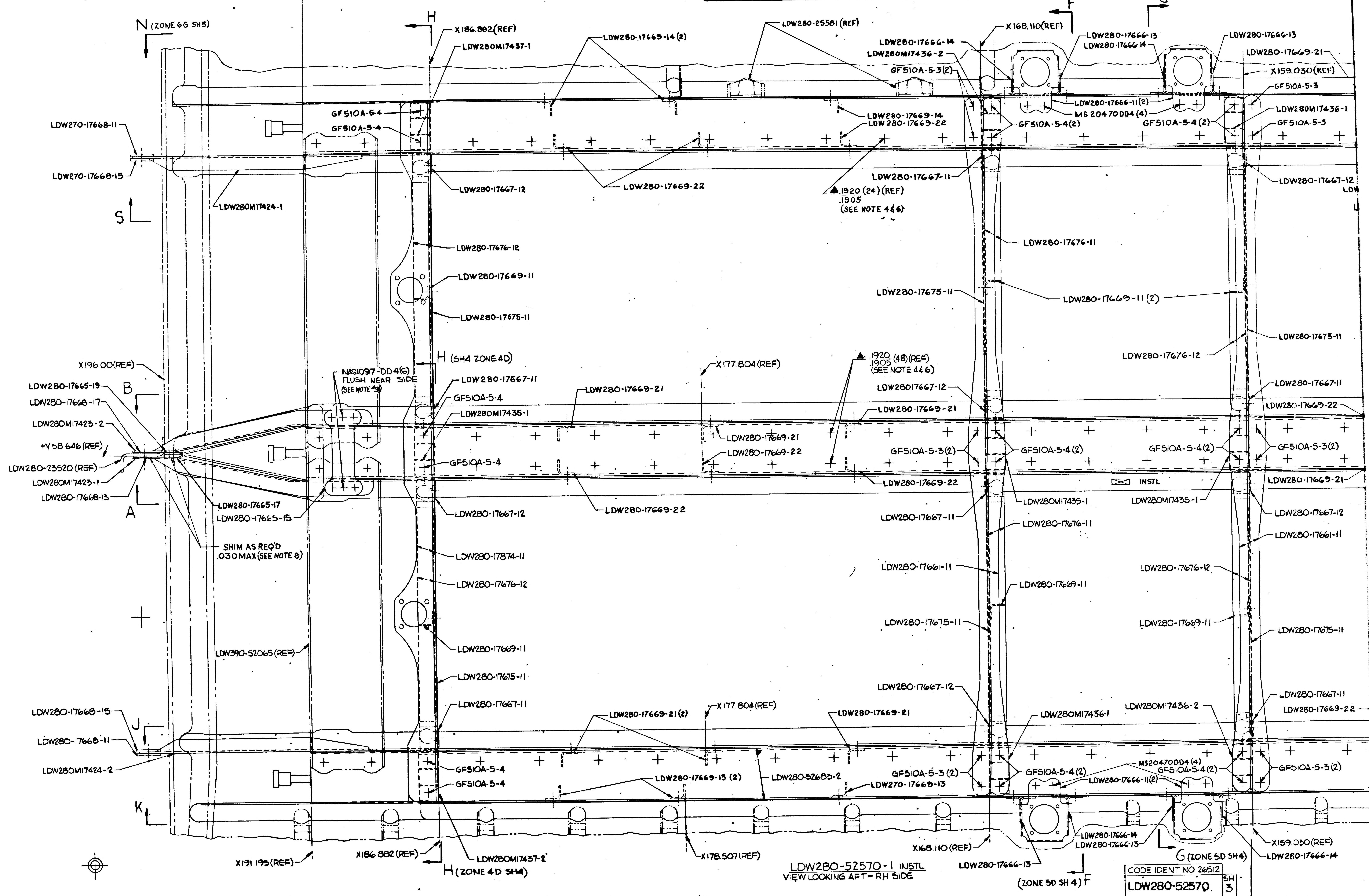

9
8
7
6
5
C
B
A
N (ZONE 6G SH5)
H
X186.882(REF)
LDW280M17437-1
LDW280-17669-14(2)
LDW280-25581(REF)
X168.110(REF)
F
G
LDW280-17666-14
LDW280M17436-2
GF510A-5-3(2)
LDW280-17666-13
LDW280-17666-14
LDW280-17666-13
LDW280-17669-21
X159.030(REF)
GF510A-5-3
LDW280-17666-11(2)
MS20470DD4(4)
GF510A-5-4(2)
GF510A-5-4(2)
LDW280M17436-1
GF510A-5-3
GF510A-5-4
GF510A-5-4
LDW270-17668-11
LDW280-17669-14
LDW280-17669-22
LDW270-17668-15
LDW280-17667-12
LDW280-17669-22
LDW280-17667-11
1920 (24)(REF)
1905
(SEE NOTE 4&6)
LDW280-17667-12
S
LDW280M17424-1
LDW280-17676-12
LDW280-17676-11
LDW280-17669-11
LDW280-17675-11
LDW280-17669-11(2)
LDW280-17675-11
LDW280-17675-11
H (SH4 ZONE 4D)
LDW280-17676-12
X196.00(REF)
NAS1097-DD4(6)
FLUSH NEAR SIDE
(SEE NOTE #9)
LDW280-17667-11
X177.804(REF)
1920 (48)(REF)
1905
(SEE NOTE 4&6)
LDW280-17665-19
B
GF510A-5-4
LDW280-17669-21
LDW280-17667-12
LDW280-17667-11
LDW280-17668-17
LDW280M17435-1
LDW280-17669-21
LDW280-17669-22
LDW280M17423-2
LDW280-17669-21
+Y58.646(REF)
LDW280-17669-22
GF510A-5-3(2)
GF510A-5-4(2)
GF510A-5-4(2)
GF510A-5-3(2)
LDW280-23520(REF)
GF510A-5-4
INSTL
LDW280-17669-21
LDW280M17423-1
LDW280-17669-22
LDW280-17668-13
LDW280M17435-1
LDW280M17435-1
A
LDW280-17665-17
LDW280-17667-12
LDW280-17669-22
LDW280-17665-15
LDW280-17667-11
LDW280-17667-12
LDW280-17676-11
LDW280-17661-11
SHIM AS REQ'D
.030 MAX (SEE NOTE 8)
LDW280-17874-11
LDW280-17661-11
LDW280-17676-12
LDW280-17676-12
LDW280-17669-11
LDW280-17669-11
LDW280-17675-11
LDW280-17675-11
LDW390-52065(REF)
LDW280-17669-11
LDW280-17615-11
LDW280-17667-12
LDW280-17667-11
LDW280-17667-11
LDW280M17436-2
LDW280-17669-22
LDW280-17668-15
LDW280-17669-21(2)
X177.804(REF)
LDW280-17669-21
LDW280M17436-1
J
LDW280-17668-11
LDW280M17424-2
GF510A-5-4
MS20470DD4(4)
GF510A-5-4(2)
GF510A-5-3(2)
GF510A-5-4(2)
GF510A-5-3(2)
LDW280-17669-13(2)
LDW280-52683-2
LDW280-17666-11(2)
GF510A-5-4
LDW270-17669-13
K
LDW280-17666-14
LDW280-17666-13
X159.030(REF)
X168.110(REF)
LDW280-17666-14
X191.195(REF)
X186.882(REF)
X178.507(REF)
LDW280M17437-2
LDW280-17666-13
G (ZONE 5D SH4)
H (ZONE 4D SH4)
(ZONE 5D SH 4) F

LDW280-52570-1 INSTL
VIEW LOOKING AFT - RH SIDE

CODE IDENT NO 26512	SH
LDW280-52570	3

2/2

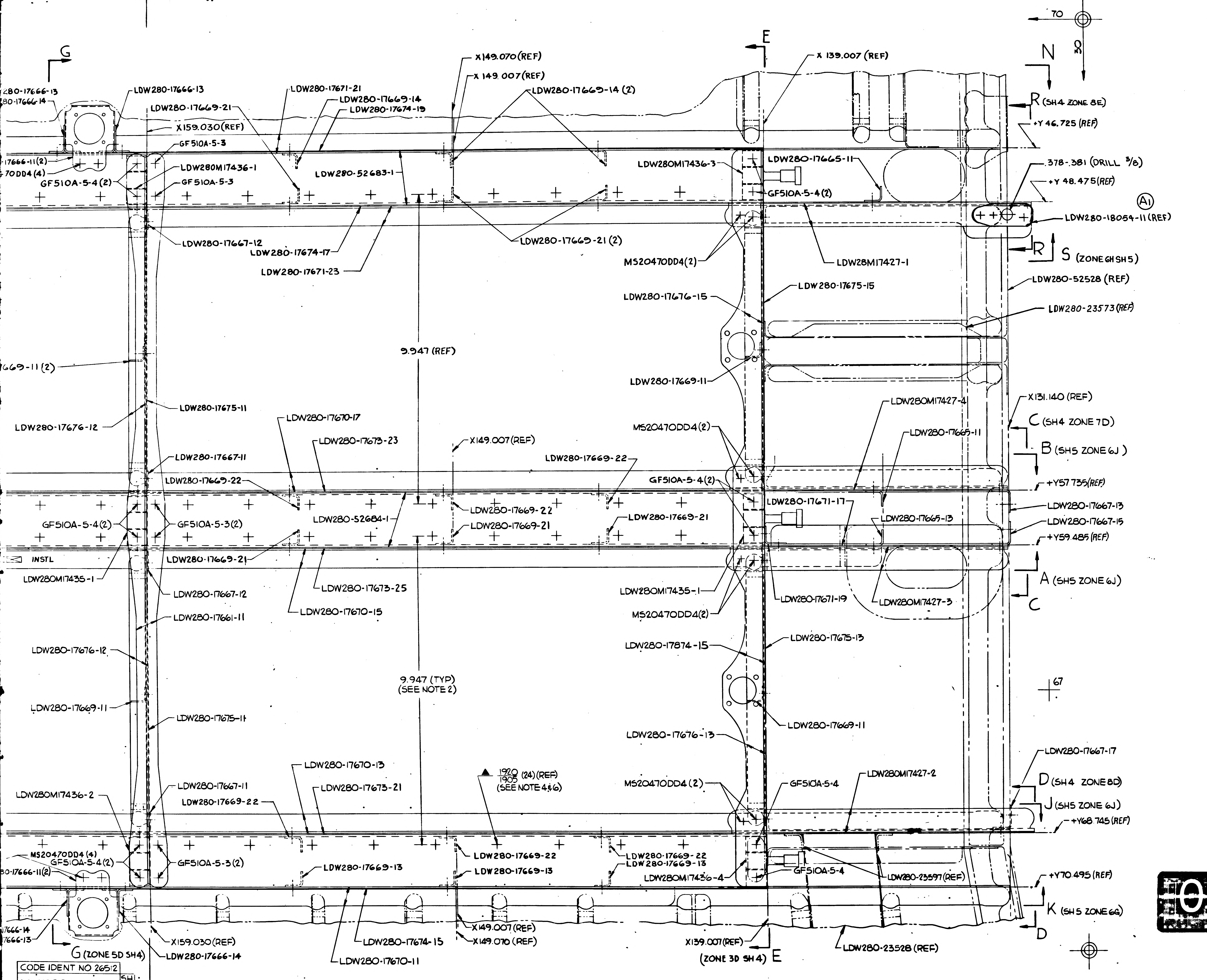
G
280-17666-13
80-17666-14
LDW280-17666-13
LDW280-17669-21
X159.030(REF)
GF510A-5-3
LDW280M17436-1
GF510A-5-3
-17666-11(2)
70DD4(4)
GF510A-5-4(2)
LDW280-17671-21
LDW280-17669-14
LDW280-17674-19
X149.070(REF)
X 149.007(REF)
LDW280-17669-14 (2)
LDW280-52683-1
LDW280-17667-12
LDW280-17674-17
LDW280-17671-23
LDW280-17669-21 (2)
E
X 139.007 (REF)
LDW280M17436-3
LDW280-17665-11
GF510A-5-4(2)
MS20470DD4(2)
LDW28M17427-1
LDW280-17676-15
LDW280-17675-15
LDW280-17669-11
70
30
N
R (SH4 ZONE 8E)
+Y 46.725 (REF)
.378-.381 (DRILL 3/8)
+Y 48.475(REF)
A1
LDW280-18054-11 (REF)
R
S (ZONE 6H SH5)
LDW280-52528 (REF)
LDW280-23573(REF)
9.947 (REF)
7669-11(2)
LDW280-17676-12
LDW280-17675-11
LDW280-17667-11
LDW280-17670-17
LDW280-17673-23
X149.007(REF)
LDW280-17669-22
LDW280-17669-22
GF510A-5-4(2)
LDW280M17427-4
LDW280-17665-11
MS20470DD4(2)
X131.140 (REF)
C (SH4 ZONE 7D)
B (SH5 ZONE 6J)
+Y57 735(REF)
LDW280-17667-13
LDW280-17667-15
+Y59.485 (REF)
GF510A-5-4(2)
GF510A-5-3(2)
LDW280-52684-1
LDW280-17669-22
LDW280-17669-21
LDW280-17669-21
LDW280-17671-17
LDW280-17665-13
INSTL
LDW280-17669-21
LDW280M17435-1
LDW280-17667-12
LDW280-17673-25
LDW280-17670-15
LDW280-17661-11
LDW280M17435-1
MS20470DD4(2)
LDW280-17671-19
LDW280M17427-3
A (SH5 ZONE 6J)
C
LDW280-17676-12
LDW280-17874-15
LDW280-17675-13
9.947 (TYP)
(SEE NOTE 2)
67
LDW280-17669-11
LDW280-17675-11
LDW280-17669-11
LDW280-17676-13
LDW280-17667-17
LDW280-17670-13
1920
1905 (24)(REF)
(SEE NOTE 4&6)
LDW280M17436-2
LDW280-17667-11
LDW280-17669-22
LDW280-17673-21
MS20470DD4 (2)
GF510A-5-4
LDW280M17427-2
D (SH4 ZONE 8D)
J (SH5 ZONE 6J)
+Y68 745 (REF)
MS20470DD4 (4)
GF510A-5-4 (2)
0-17666-11(2)
GF510A-5-3(2)
LDW280-17669-13
LDW280-17669-22
LDW280-17669-13
LDW280-17669-22
LDW280-17669-13
LDW280M17436-4
GF510A-5-4
LDW280-23597(REF)
+Y70.495 (REF)
K (SH5 ZONE 6G)
D
7666-14
7666-13
G (ZONE 5D SH4)
X159.030(REF)
LDW280-17666-14
LDW280-17674-15
LDW280-17670-11
X149.007(REF)
X149.070 (REF)
X139.007(REF)
(ZONE 3D SH 4)
E
LDW280-23528 (REF)
5
4
3
2
1
C
B
A

NOTES:

1. NO TOOLING HOLES PERMITTED IN PARTS
2. ON INSTALLATION CORRESPONDING HOLES IN ADJACENT COLD RAILS SHALL BE WITHIN .006 AS SHOWN
~~3. INSTALL FASTENERS PER LSP14-15302 LSP14-15303, & LSP14-15304~~
4. FOR HOLES MARKED ▲ SEE LSC390-26 (E.C.A) LSC390-22000 (BATTERY) & LDW390-52065 (E.D BATTERY BRKT) FOR CORRESPONDING HOLE PATTERN.
5. ALL ABBREVIATIONS ARE PER MIL-STD 12 EXCEPT AS NOTED:-
   E.P.S.-ELECTRICAL POWER SYSTEMS
   E.D.B.S.-EXPLOSIVE DEVICES BATTERIES SUPT
   E.C.A.-ELECTRONIC CONTROL ASSY.
6. FOR MAX. FASTENER DIA (.1895)
7. UNLESS OTHERWISE SPECIFIED ALL RIVETING THRU LDW280-17675-11,-13,-15, LDW280-17674-15,-17,-19, LDW280-17673-21,-23,-25 TO HAVE MFG HD OF RIVET ON WEB SIDE. INSTALL RIVETS WET & OVERCOAT RIVET HEADS WITH EPON 919 PER LSP14-14102.
8. SHIM AS REQ'D USING AL ALLOY SHEET 2024-T3 QQ-A-250/4 FINISH #88
9. INSTALL RIVETS WET & OVERCOAT THE TAILS WITH EPON 919 PER LSP14-14102.
10. INSTALL GR500A PER LSP14-15303 AND GF510A PER LSP14-15304

MANUFACTURING OPERATIONS UNLESS OTHERWISE SPECIFIED NOTES CHECKED ✓ APPLY TO THIS DWG.	
RUBBER STAMP PART NUMBER AND ALL OTHER MARKINGS IN REGION MARKED ☒ USE BOTH SIDES IF NECESSARY.	✓
FILLET AND INSIDE CORNER RADII TOLERANCES .016R TO .062R ± .010 .063R TO .250R ± .015 OVER .250R ± .030	
DEPTH SHOWN FOR TAPPED HOLES IS FULL THDS. 2-3 IMP THDS. BEYOND PERMISSIBLE.	
EXTERNAL THREAD LENGTH SHOWN INCLUDES 2 IMPERFECT THREADS MAX.	
DO NOT CADMIUM PLATE & PAINT HOLES OR SURFACES MARKED WITH DOUBLE ASTERISK.	
MISMATCH STEP OF ± .005 PERMISSIBLE DUE TO CHANGE OF CUTTERS AT INSIDE INTERSECTING SURFACES.	
DIAMETERS MARKED MUST BE CONCENTRIC WITHIN FULL INDICATOR READING	
HOLES MUST BE KEPT FREE OF CHROME PLATING SOLUTION.	
ALL DIMENSIONS SHOWN TO BE MET AFTER CADMIUM PLATING. THICKNESS OF PLATE .0003 MIN. TO .0005 MAX. MIN. THICKNESS TO BE .0002 ON THREADED AREAS. NO ALLOWANCE FOR PLATING IN HOLES	
125 SURFACE ROUGHNESS INCLUDING REAMED HOLES PER MIL-STD-10	
200 FOR ALL DRILLED HOLES	
REMOVE ALL BURRS. BREAK ALL EDGES .015-.031	
INSPECTION INFORMATION MINIMUM PERMISSIBLE AVERAGE EDGE DISTANCE MARKED IS	
SYMBOL ƒ DENOTES SURFACE TO BE MACHINED	
UNLESS OTHERWISE SPECIFIED TOLERANCE ON FLANGES IS ± 1/32	✓
LENGTHS OF AN, NAS & MS AL ALY RIVETS SHORTER THAN 1 INCH ARE NOT SPECIFIED.	
TOLERANCE ON LOFTED DELINEATIONS IS ± 1/32	✓

DWG SIZE 34 X 88

PRINTING INFO ONLY

LDW280-52570 A

LDW280-52570 A

02/02

NAS 9-1100

CODE IDENT NO 26512
LDW280-52570
SH 3

GRUMMAN AIRCRAFT ENGRG CORP., BETHPAGE, L. I., NEW YORK

LEM	SIZE J	CODE IDENT NO. 26512	LDW280-52570	A
MODEL OR END ITEM	SCALE FULL		SHEET 3.00	

FOR PHOTO REPRODUCTION

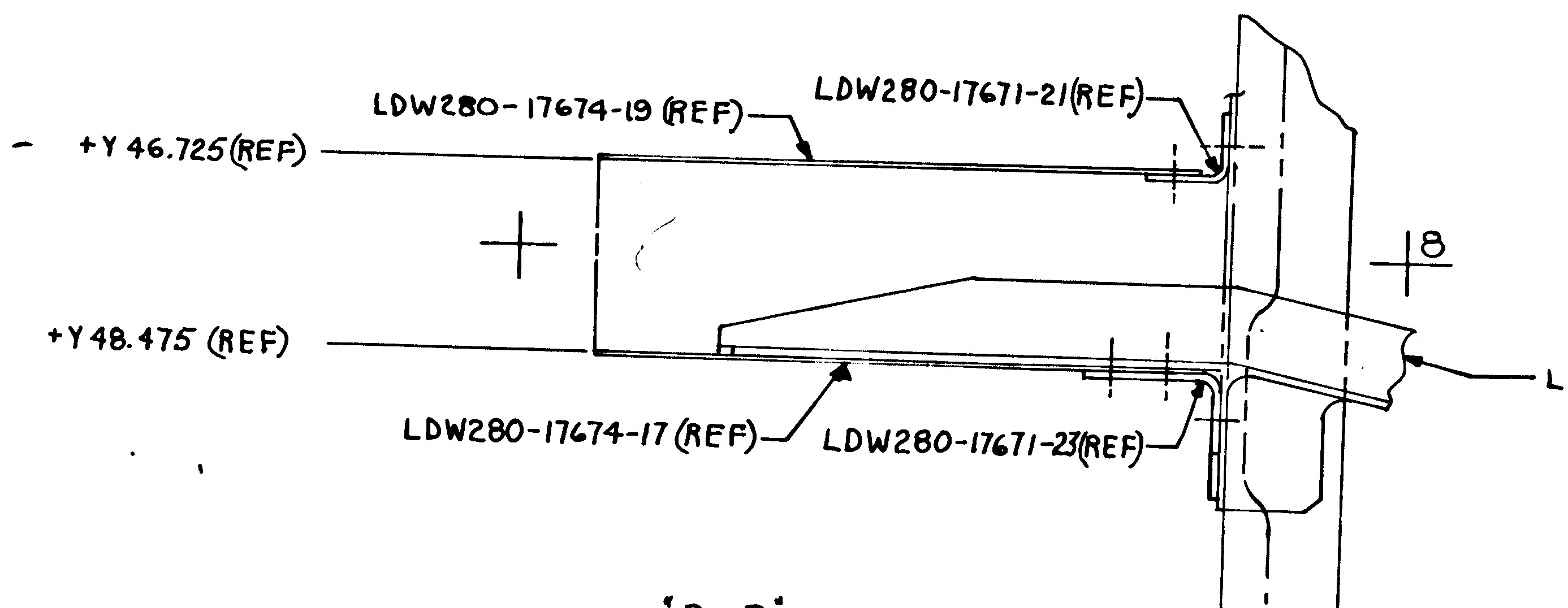

LDW280-17674-19 (REF)
LDW280-17671-21(REF)
+Y 46.725(REF)
8
+Y48.475 (REF)
LDW280M17332-1(REF)
LDW280-17674-17 (REF)
LDW280-17671-23(REF)

SECTION "R-R" (ZONE 2C SH3)

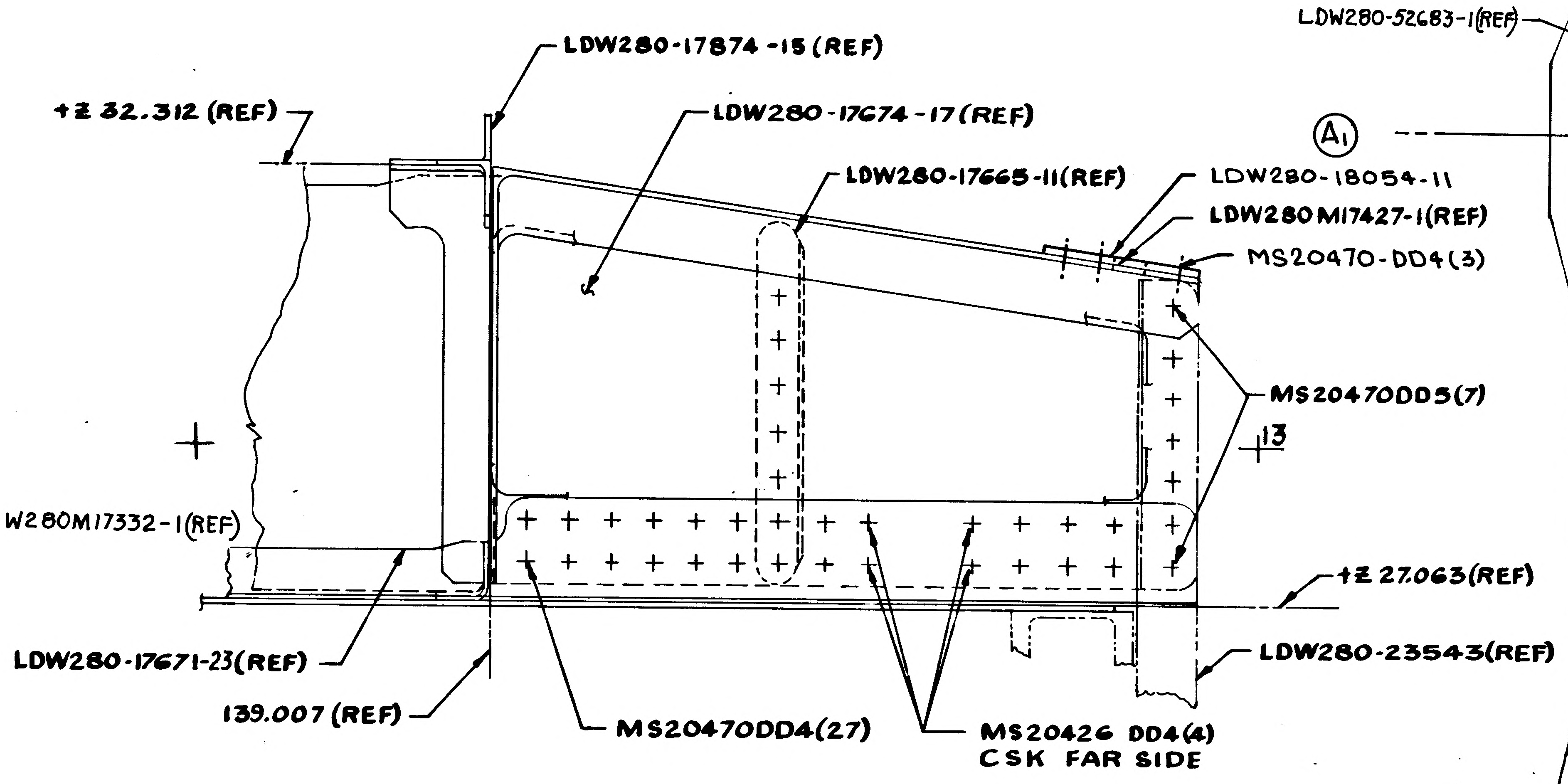

LDW280-17874-15 (REF)
+Z 32.312 (REF)
LDW280-17674-17 (REF)
LDW280-17665-11(REF)
LDW280-18054-11
LDW280M17427-1(REF)
MS20470-DD4(3)
MS20470DD5(7)
13
+Z 27.063(REF)
LDW280-17671-23(REF)
LDW280-23543(REF)
139.007 (REF)
MS20470DD4(27)
MS20426 DD4(4) CSK FAR SIDE

DETAIL "T" (ZONE 4H SH5)

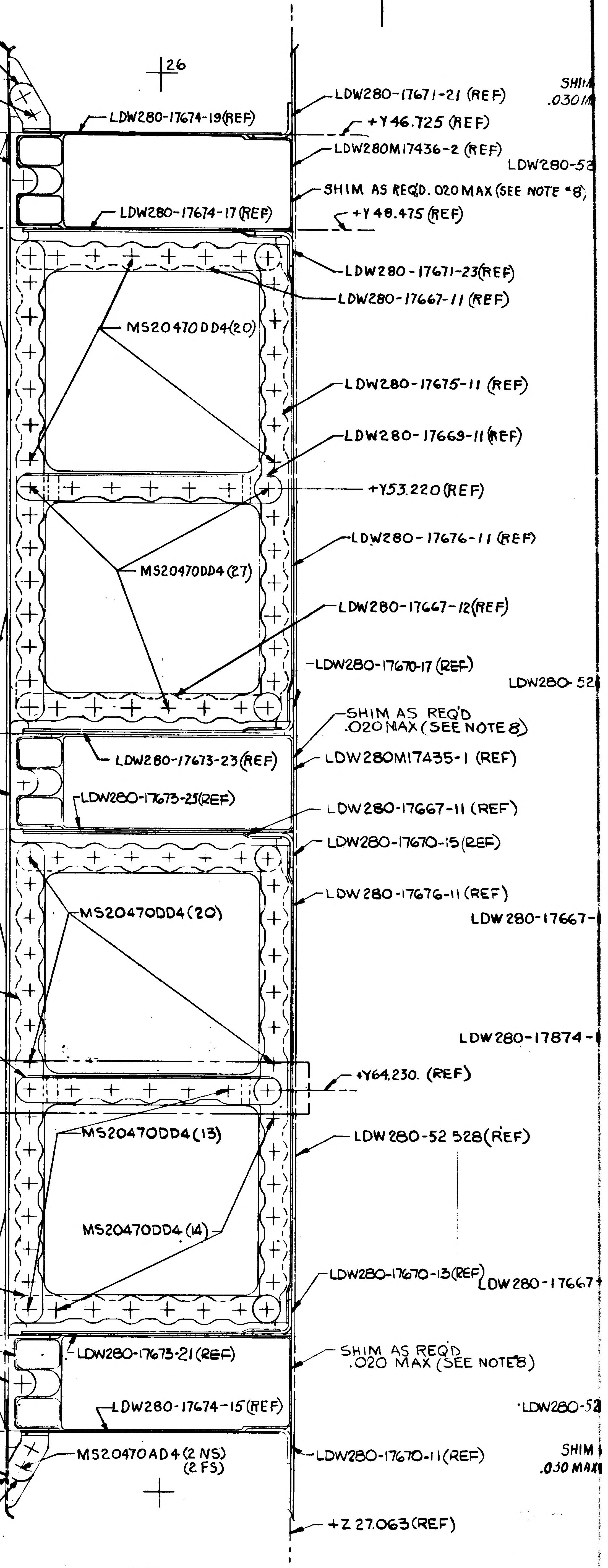

LDW280-17666-11(REF)
LDW280-17666-13 (REF)
MS20470AD4 (2 NS) (2 FS)
26
LDW280-17671-21 (REF)
+Y 46.725 (REF)
LDW280-17674-19(REF)
LDW280-52683-1(REF)
LDW280M17436-2 (REF)
SHIM AS REQ'D. .020 MAX (SEE NOTE 8)
+Y 48.475 (REF)
LDW280-17674-17(REF)
A1
LDW280-17671-23(REF)
LDW280-17667-11 (REF)
MS20470DD4(20)
LDW280-17675-11 (REF)
LDW280-17669-11(REF)
+Y53.220(REF)
LDW280-17676-11 (REF)
MS20470DD4(27)
LDW280-17667-12(REF)
LDW280-17670-17 (REF)
+Y 57.735(REF)
SHIM AS REQ'D .020 MAX (SEE NOTE 8)
LDW280-17673-23(REF)
LDW280M17435-1 (REF)
LDW280-52684-1 (REF)
LDW280-17673-25(REF)
+Y 59.485 (REF)
LDW280-17667-11 (REF)
LDW280-17670-15(REF)
LDW280-17661-11 (REF)
LDW280-17676-11 (REF)
MS20470DD4(20)
LDW280-17675-11 (REF)
LDW280-17669-11(REF)
+Y64.230. (REF)
FOR SECTION G-G SEE DETAIL "U" ZONE 7D SH 4
LDW280-52 528(REF)
MS20470DD4(13)
MS20470DD4 (14)
LDW280-17667-12(REF)
LDW280-17670-13(REF)
+Y68.745 (REF)
LDW280M17436-1 (REF)
LDW280-17673-21(REF)
LDW280-52683-2 (REF)
SHIM AS REQ'D .020 MAX (SEE NOTE 8)
+Y 70.495 (REF)
LDW280-17674-15(REF)
+Z 32.312 (REF)
MS20470AD4 (2 NS) (2 FS)
LDW280-17670-11(REF)
LDW280-17666-11(REF)
LDW280-17666-14(REF)
+Z 27.063(REF)

SECTION F-F (SHOWN) (ZONE 6A SH3)
SECTION G-G (OPP) (ZONE 5A SH3)

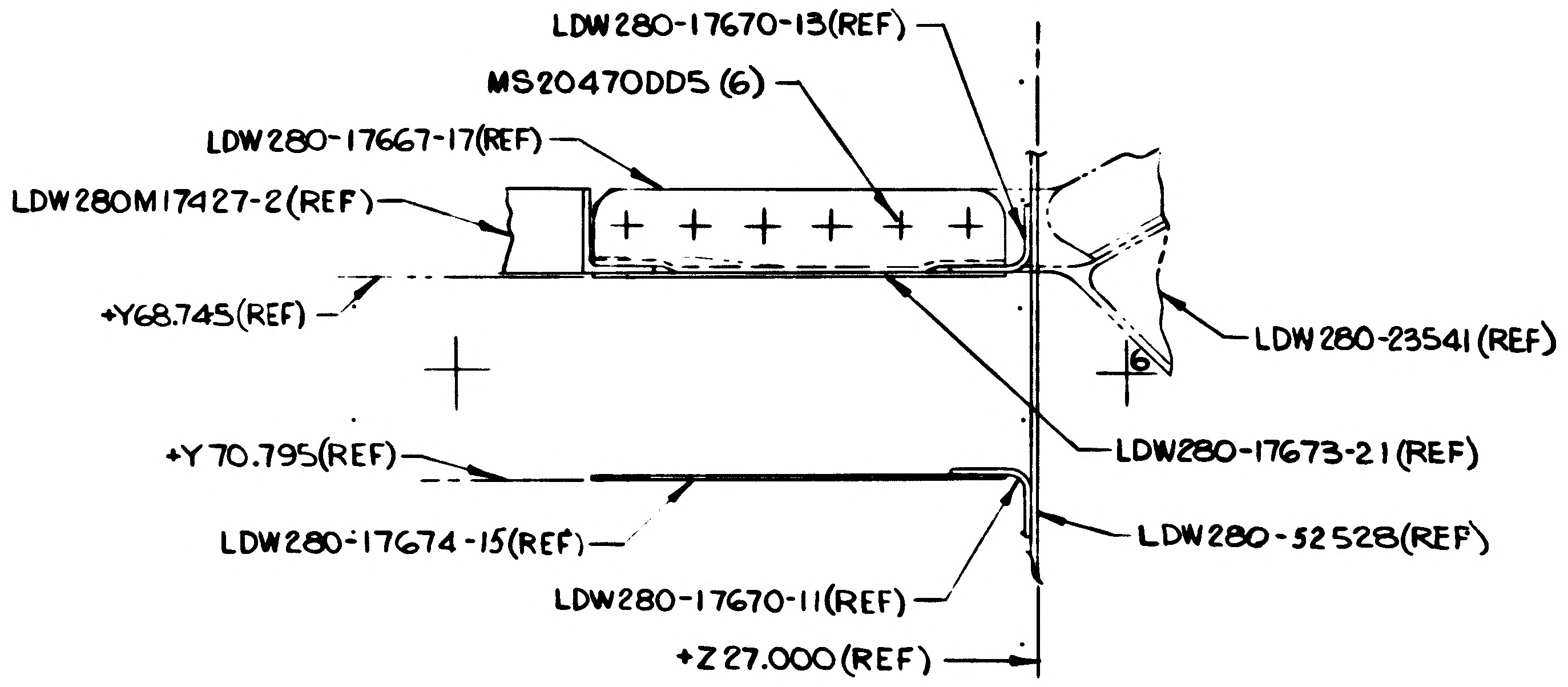

LDW280-17670-13(REF)
MS20470DD5 (6)
LDW280-17667-17(REF)
LDW280M17427-2(REF)
+Y68.745(REF)
LDW280-23541(REF)
6
+Y 70.795(REF)
LDW280-17673-21(REF)
LDW280-17674-15(REF)
LDW280-52528(REF)
LDW280-17670-11(REF)
+Z27.000(REF)

SECTION D-D (ZONE 2A SH3)

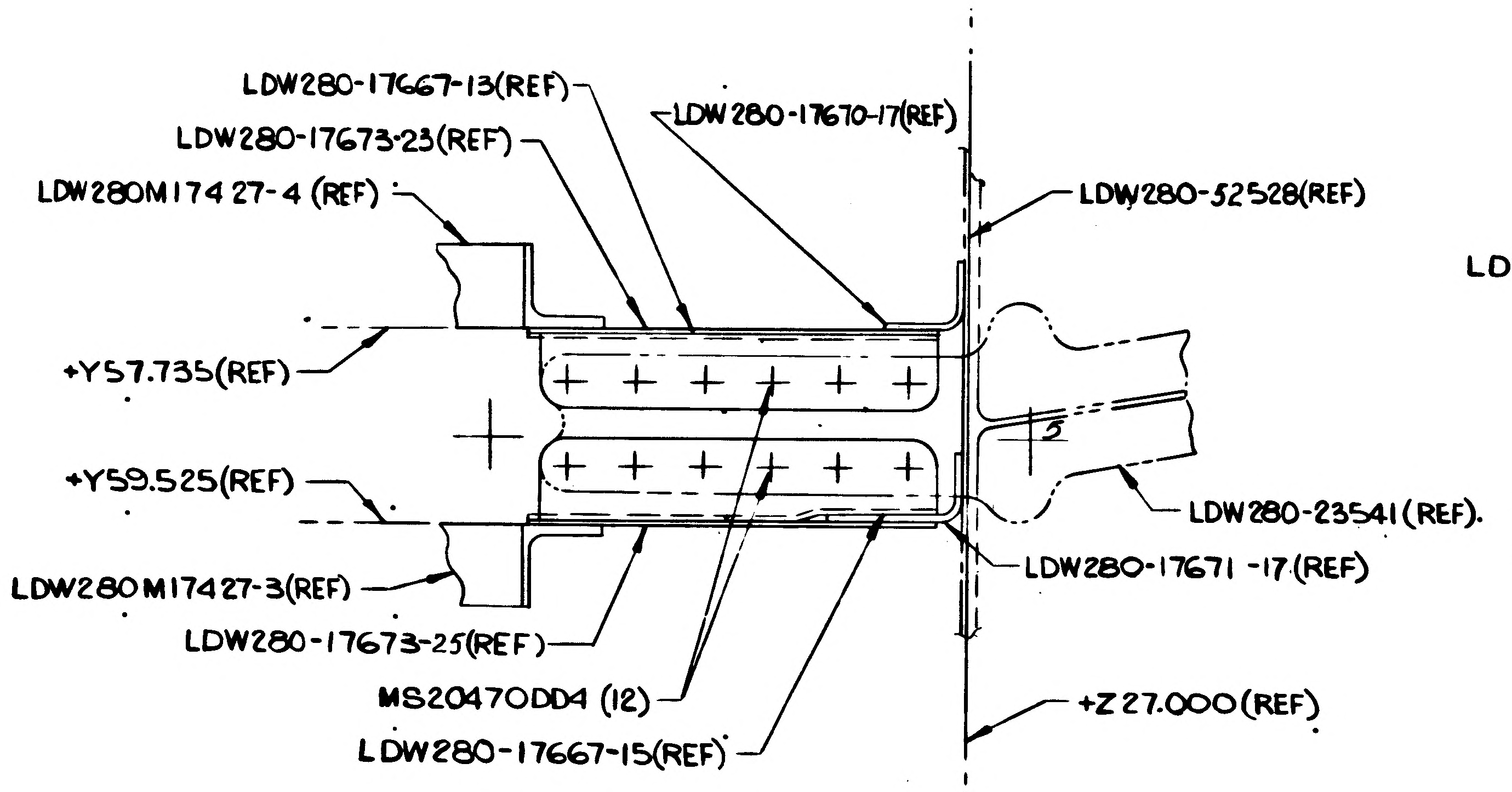

LDW280-17667-13(REF)
LDW280-17673-23(REF)
LDW280-17670-17(REF)
LDW280M17427-4 (REF)
LDW280-52528(REF)
+Y57.735(REF)
+Y59.525(REF)
5
LDW280-23541(REF).
LDW280M17427-3(REF)
LDW280-17671-17(REF)
LDW280-17673-25(REF)
MS20470DD4 (12)
+Z27.000(REF)
LDW280-17667-15(REF)

SECTION C-C (ZONE 2B SH3)

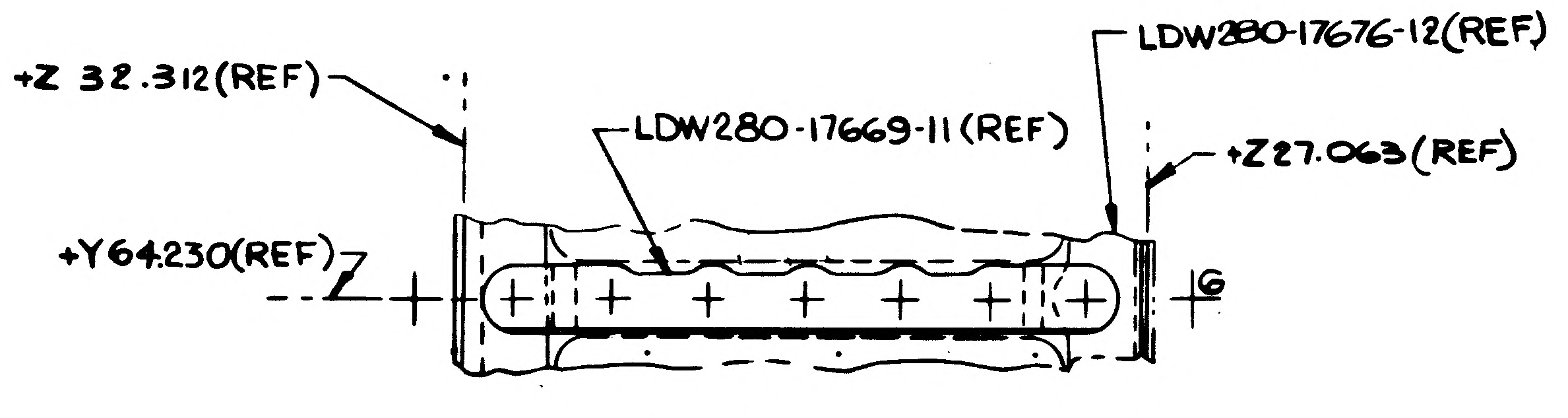

LDW280-17676-12(REF)
+Z 32.312(REF)
LDW280-17669-11 (REF)
+Z27.063(REF)
+Y64.230(REF)
6

DETAIL "U". (ZONE 6D SH 4)

2/2

01/02

NAS 9-1100

CODE IDENT NO. 26512
LDW280-52570
SH 4

5 4 3 2 1

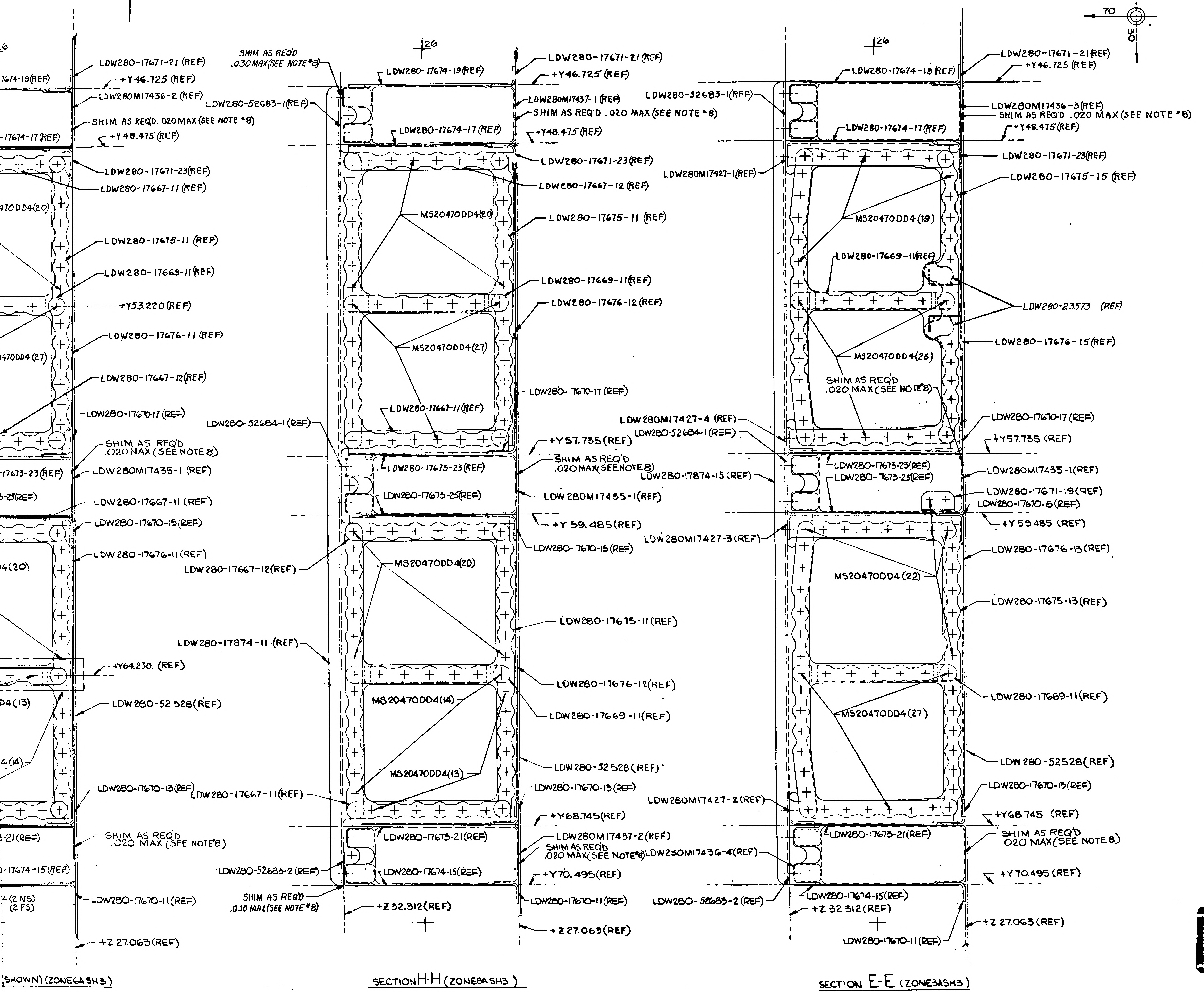

26
17674-19(REF)
-17674-17(REF)
470DD4(20)
470DD4(27)
-17673-23(REF)
3-25(REF)
4(20)
D4(13)
4(14)
3-21(REF)
0-17674-15(REF)
4(2 NS)
(2 FS)
LDW280-17671-21 (REF)
+Y46.725 (REF)
LDW280M17436-2 (REF)
SHIM AS REQ'D. .020 MAX (SEE NOTE *8)
+Y48.475 (REF)
LDW280-17671-23(REF)
LDW280-17667-11 (REF)
LDW280-17675-11 (REF)
LDW280-17669-11(REF)
+Y53.220(REF)
LDW280-17676-11 (REF)
LDW280-17667-12(REF)
LDW280-17670-17 (REF)
SHIM AS REQ'D .020 MAX (SEE NOTE 8)
LDW280M17435-1 (REF)
LDW280-17667-11 (REF)
LDW280-17670-15(REF)
LDW280-17676-11(REF)
+Y64.230. (REF)
LDW280-52 528(REF)
LDW280-17670-13(REF)
SHIM AS REQ'D .020 MAX (SEE NOTE 8)
LDW280-17670-11(REF)
+Z 27.063(REF)
SHIM AS REQ'D .030 MAX(SEE NOTE *8)
LDW280-52683-1(REF)
26
LDW280-17674-19(REF)
LDW280-17671-21(REF)
+Y46.725 (REF)
LDW280M17437-1 (REF)
SHIM AS REQ'D .020 MAX (SEE NOTE *8)
LDW280-17674-17(REF)
+Y48.475(REF)
LDW280-17671-23(REF)
LDW280-17667-12 (REF)
MS20470DD4(20)
LDW280-17675-11 (REF)
LDW280-17669-11(REF)
LDW280-17676-12(REF)
MS20470DD4(27)
LDW280-17667-11(REF)
LDW280-17670-17 (REF)
LDW280-52684-1 (REF)
+Y57.735 (REF)
LDW280-17673-23(REF)
SHIM AS REQ'D .020 MAX(SEE NOTE 8)
LDW280-17673-25(REF)
LDW280M17435-1(REF)
+Y 59.485(REF)
LDW280-17670-15(REF)
LDW280-17667-12(REF)
MS20470DD4(20)
LDW280-17675-11(REF)
LDW280-17874-11 (REF)
LDW280-17676-12(REF)
MS20470DD4(14)
LDW280-17669-11(REF)
LDW280-52528 (REF)
MS20470DD4(13)
LDW280-17670-13(REF)
LDW280-17667-11(REF)
+Y68.745(REF)
LDW280-17673-21(REF)
LDW280M17437-2 (REF)
SHIM AS REQ'D .020 MAX(SEE NOTE 8)
LDW280-52683-2 (REF)
LDW280-17674-15(REF)
+Y70.495(REF)
SHIM AS REQ'D .030 MAX(SEE NOTE *8)
LDW280-17670-11(REF)
+Z 32.312(REF)
+Z 27.063(REF)
70
30
26
LDW280-17674-19(REF)
LDW280-17671-21(REF)
+Y46.725(REF)
LDW280-52683-1(REF)
LDW280M17436-3(REF)
SHIM AS REQ'D .020 MAX (SEE NOTE *8)
LDW280-17674-17(REF)
+Y48.475(REF)
LDW280-17671-23(REF)
LDW280M17427-1(REF)
LDW280-17675-15 (REF)
MS20470DD4(19)
LDW280-17669-11(REF)
LDW280-23573 (REF)
LDW280-17676-15(REF)
MS20470DD4(26)
SHIM AS REQ'D .020 MAX (SEE NOTE 8)
LDW280-17670-17 (REF)
LDW280M17427-4 (REF)
LDW280-52684-1(REF)
+Y57.735 (REF)
LDW280-17874-15 (REF)
LDW280-17673-23(REF)
LDW280-17673-25(REF)
LDW280M17435-1(REF)
LDW280-17671-19(REF)
LDW280-17670-15(REF)
+Y59.485 (REF)
LDW280M17427-3(REF)
LDW280-17676-13(REF)
MS20470DD4(22)
LDW280-17675-13(REF)
LDW280-17669-11(REF)
MS20470DD4(27)
LDW280-52528(REF)
LDW280-17670-13(REF)
LDW280M17427-2(REF)
+Y68 745 (REF)
LDW280-17673-21(REF)
SHIM AS REQ'D .020 MAX(SEE NOTE 8)
LDW230M17436-4(REF)
+Y70.495 (REF)
LDW280-52683-2(REF)
LDW280-17674-15(REF)
+Z 32.312(REF)
+Z 27.063(REF)
LDW280-17670-11(REF)

(SHOWN)(ZONE6ASH3)
(OPP)(ZONE5ASH3)

SECTION H-H (ZONE8ASH3)

SECTION E-E (ZONE3ASH3)

MANUFACTURING OPERATIONS UNLESS OTHERWISE SPECIFIED NOTES CHECKED ✓ APPLY TO THIS DWG.
PART NUMBER AND ALL OTHER MARKINGS IN REGION MARKED ▭ USE BOTH SIDES IF NECESSARY.
FILLET AND INSIDE CORNER RADII TOLERANCES .016R TO .062R ± .010 .063R TO .250R ± .015 OVER .250R ± .030
DEPTH SHOWN FOR TAPPED HOLES IS FULL THDS. 2-3 IMP THDS. BEYOND PERMISSIBLE.
EXTERNAL THREAD LENGTH SHOWN INCLUDES 2 IMPERFECT THREADS MAX.
DO NOT CADMIUM PLATE & PAINT HOLES OR SURFACES MARKED WITH DOUBLE ASTERISK.
MISMATCH STEP OF ± .005 PERMISSIBLE DUE TO CHANGE OF CUTTERS AT INSIDE INTERSECTING SURFACES.
DIAMETERS MARKED MUST BE CONCENTRIC WITHIN FULL INDICATOR READING
HOLES MUST BE KEPT FREE OF CHROME PLATING SOLUTION.
ALL DIMENSIONS SHOWN TO BE MET AFTER CADMIUM PLATING. THICKNESS OF PLATE .0003 MIN. TO .0005 MAX. MIN. THICKNESS TO BE .0002 ON THREADED AREAS. NO ALLOWANCE FOR PLATING IN HOLES
125 SURFACE ROUGHNESS INCLUDING REAMED HOLES PER MIL-STD-10
200 FOR ALL DRILLED HOLES
REMOVE ALL BURRS. BREAK ALL EDGES .015-.031
INSPECTION INFORMATION MINIMUM PERMISSIBLE AVERAGE EDGE DISTANCE MARKED IS
SYMBOL ƒ DENOTES SURFACE TO BE MACHINED
UNLESS OTHERWISE SPECIFIED TOLERANCE ON FLANGES IS ± 1/32
LENGTHS OF AN, NAS & MS AL ALY RIVETS SHORTER THAN 1 INCH ARE NOT SPECIFIED.
TOLERANCE ON LOFTED DELINEATIONS IS

DWG SIZE 34 X 88
PRINTING INFO ONLY 36 X 90

F

E

LDW280-52570 A

LDW280-52570 A U

02/02 NAS 9-1100

DE IDENT NO. 26512
W280-52570 SH 4

GRUMMAN AIRCRAFT ENGRG CORP., BETHPAGE, L. I., NEW YORK				
LEM	SIZE J	CODE IDENT NO 26512	LDW280-52570	A
MODEL OR END ITEM	SCALE FULL		SHEET 4.00	

5 4 3 2 1 FOR PHOTO REPRODUCTION K2

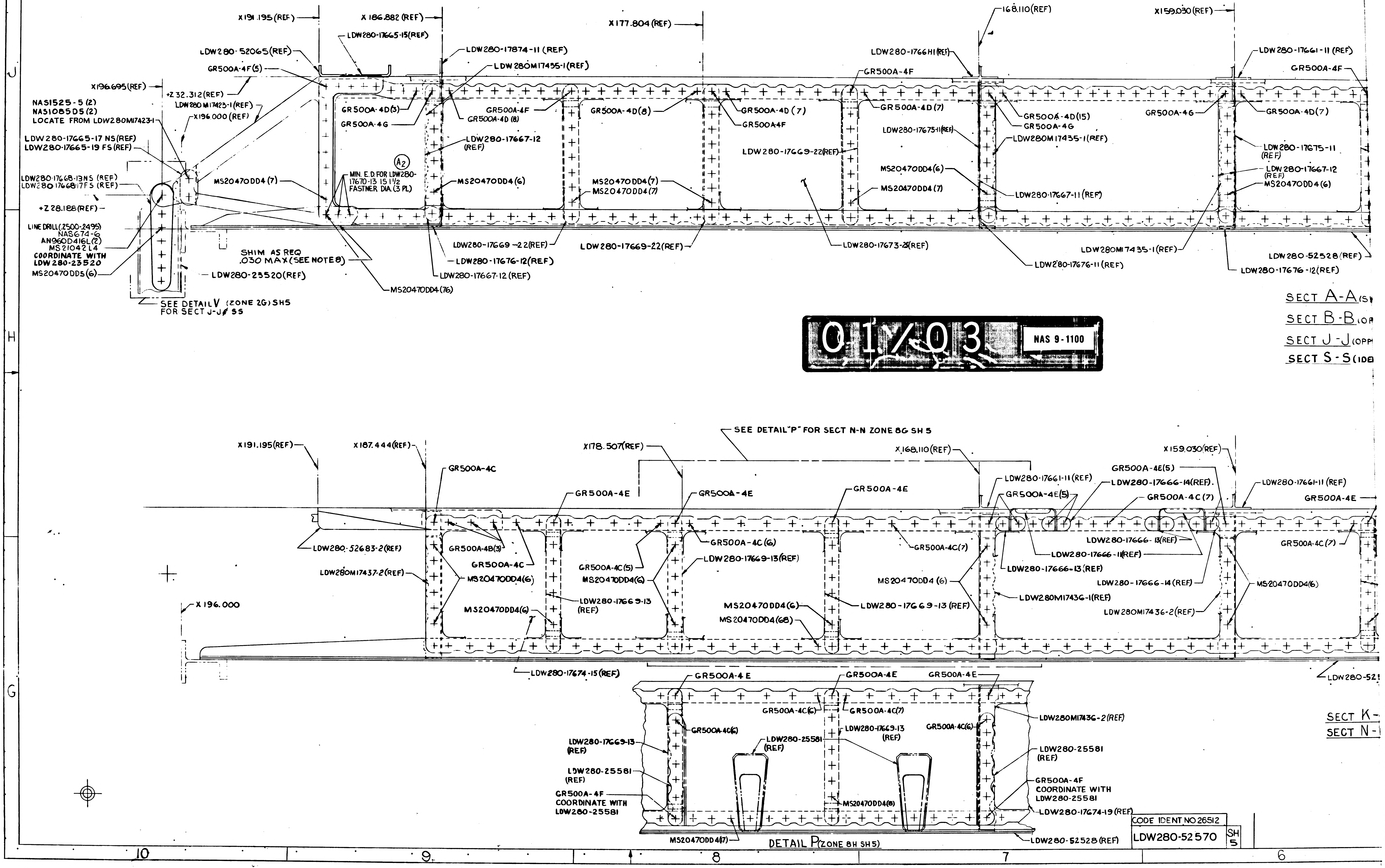

X191.195(REF)
X186.882(REF)
X177.804(REF)
168.110(REF)
X159.030(REF)
LDW280-17665-15(REF)
LDW280-52065(REF)
LDW280-17874-11 (REF)
LDW280M17435-1(REF)
GR500A-4F(5)
X196.695(REF)
+Z32.312(REF)
NAS1525-5(2)
NAS1085D5(2)
LOCATE FROM LDW280M17423-1
LDW280M17423-1(REF)
X196.000(REF)
LDW280-17665-17 NS(REF)
LDW280-17665-19 FS(REF)
LDW280-17668-13NS (REF)
LDW280-17668-17FS (REF)
+Z28.188(REF)
LINE DRILL(.2500-.2495)
NAS674-6
AN960D416L(2)
MS21042L4
COORDINATE WITH
LDW280-23520
MS20470DD5(6)
LDW280-23520(REF)
SEE DETAIL V (ZONE 2G) SH5
FOR SECT J-J SS
GR500A-4D(3)
GR500A-4G
GR500A-4F
GR500A-4D(8)
MS20470DD4(7)
MIN. E.D. FOR LDW280-17670-13 IS 1 1/2 FASTNER DIA. (3 PL)
A2
LDW280-17667-12 (REF)
MS20470DD4(6)
GR500A-4D(8)
MS20470DD4(7)
MS20470DD4(7)
GR500A-4D(7)
GR500A4F
LDW280-17669-22(REF)
LDW280-1766H1(REF)
GR500A-4F
GR500A-4D(7)
LDW280-17675-11(REF)
MS20470DD4(6)
MS20470DD4(7)
GR500A-4D(15)
GR500A-4G
LDW280M17435-1(REF)
LDW280-17667-11(REF)
LDW280-17661-11 (REF)
GR500A-4F
GR500A-4G
GR500A-4D(7)
LDW280-17675-11 (REF)
LDW280-17667-12 (REF)
MS20470DD4(6)
SHIM AS REQ
.030 MAX (SEE NOTE 8)
MS20470DD4(76)
LDW280-17669-22(REF)
LDW280-17676-12(REF)
LDW280-17667-12 (REF)
LDW280-17669-22(REF)
LDW280-17673-23(REF)
LDW280M17435-1(REF)
LDW280-17676-11(REF)
LDW280-52528(REF)
LDW280-17676-12(REF)
SECT A-A
SECT B-B
SECT J-J
SECT S-S
SEE DETAIL "P" FOR SECT N-N ZONE 8G SH 5
X191.195(REF)
X187.444(REF)
X178.507(REF)
X168.110(REF)
X159.030(REF)
GR500A-4C
GR500A-4E
GR500A-4E
GR500A-4E
LDW280-17661-11(REF)
GR500A-4E(5)
LDW280-17666-14(REF)
GR500A-4E(5)
GR500A-4C(7)
LDW280-17661-11 (REF)
GR500A-4E
LDW280-52683-2(REF)
GR500A-4B(3)
GR500A-4C
GR500A-4C(6)
GR500A-4C(7)
LDW280-17666-13(REF)
LDW280-17666-11(REF)
GR500A-4C(7)
LDW280M17437-2(REF)
MS20470DD4(6)
GR500A-4C(5)
MS20470DD4(6)
LDW280-17669-13(REF)
LDW280-17666-13(REF)
LDW280-17666-14(REF)
MS20470DD4 (6)
LDW280M17436-1(REF)
MS20470DD4(6)
X196.000
MS20470DD4(6)
LDW280-17669-13 (REF)
MS20470DD4(6)
MS20470DD4(68)
LDW280-17669-13 (REF)
LDW280M17436-2(REF)
LDW280-17674-15(REF)
LDW280-52
SECT K-
SECT N-
GR500A-4E
GR500A-4E
GR500A-4E
GR500A-4C(6)
GR500A-4C(7)
LDW280M17436-2(REF)
GR500A-4C(6)
LDW280-17669-13 (REF)
GR500A-4C(6)
LDW280-17669-13 (REF)
LDW280-25581 (REF)
LDW280-25581 (REF)
LDW280-25581 (REF)
GR500A-4F
COORDINATE WITH
LDW280-25581
GR500A-4F
COORDINATE WITH
LDW280-25581
MS20470DD4(8)
LDW280-17674-19(REF)
MS20470DD4(7)
DETAIL P (ZONE 8H SH5)
LDW280-52528(REF)

01/03 NAS 9-1100

CODE IDENT NO 26512

LDW280-52570 SH 5

3/3

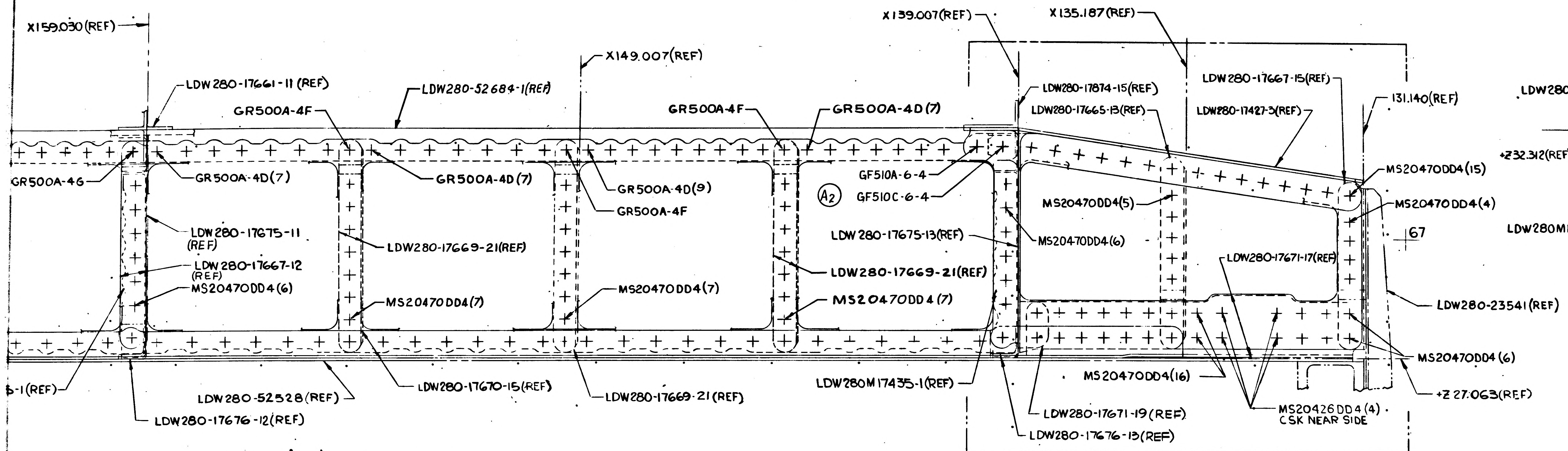

X159.030(REF)
X149.007(REF)
X139.007(REF)
X135.187(REF)
131.140(REF)
LDW280-17661-11 (REF)
LDW280-52684-1(REF)
GR500A-4F
GR500A-4F
GR500A-4D(7)
GR500A-46
GR500A-4D(7)
GR500A-4D(7)
GR500A-4D(9)
GR500A-4F
LDW280-17675-11 (REF)
LDW280-17667-12 (REF)
MS20470DD4(6)
LDW280-17669-21(REF)
MS20470DD4(7)
MS20470DD4(7)
A2
GF510A-6-4
GF510C-6-4
LDW280-17675-13(REF)
LDW280-17669-21(REF)
MS20470DD4(7)
LDW280-17874-15(REF)
LDW280-17665-13(REF)
LDW280-17667-15(REF)
LDW280-17427-3(REF)
MS20470DD4(15)
MS20470DD4(5)
MS20470DD4(4)
MS20470DD4(6)
67
LDW280-17671-17(REF)
LDW280-23541(REF)
MS20470DD4(6)
5-1(REF)
LDW280-52528(REF)
LDW280-17670-15(REF)
LDW280-17669-21(REF)
LDW280M17435-1(REF)
MS20470DD4(16)
+Z27.063(REF)
LDW280-17676-12(REF)
LDW280-17671-19(REF)
MS20426DD4(4) CSK NEAR SIDE
LDW280-17676-13(REF)

SEE DETAIL "L" FOR SECT J-J ZONE 2H SH5
SEE DETAIL "M" FOR SECT B-B ZONE 2J SH5
SEE DETAIL "T" FOR SECT S-S ZONE 7E SH4

SECT A-A (SHOWN) ZONE 2B(SH3)

SECT B-B (OPP TO SECT A-A) EXCEPT AS NOTED (ZONE 2B) SH3

SECT J-J (OPP TO SECT A-A) EXCEPT AS NOTED (ZONE 2A) SH3

SECT S-S (IDENT. TO A-A) EXCEPT AS NOTED (ZONE 6E) SH4

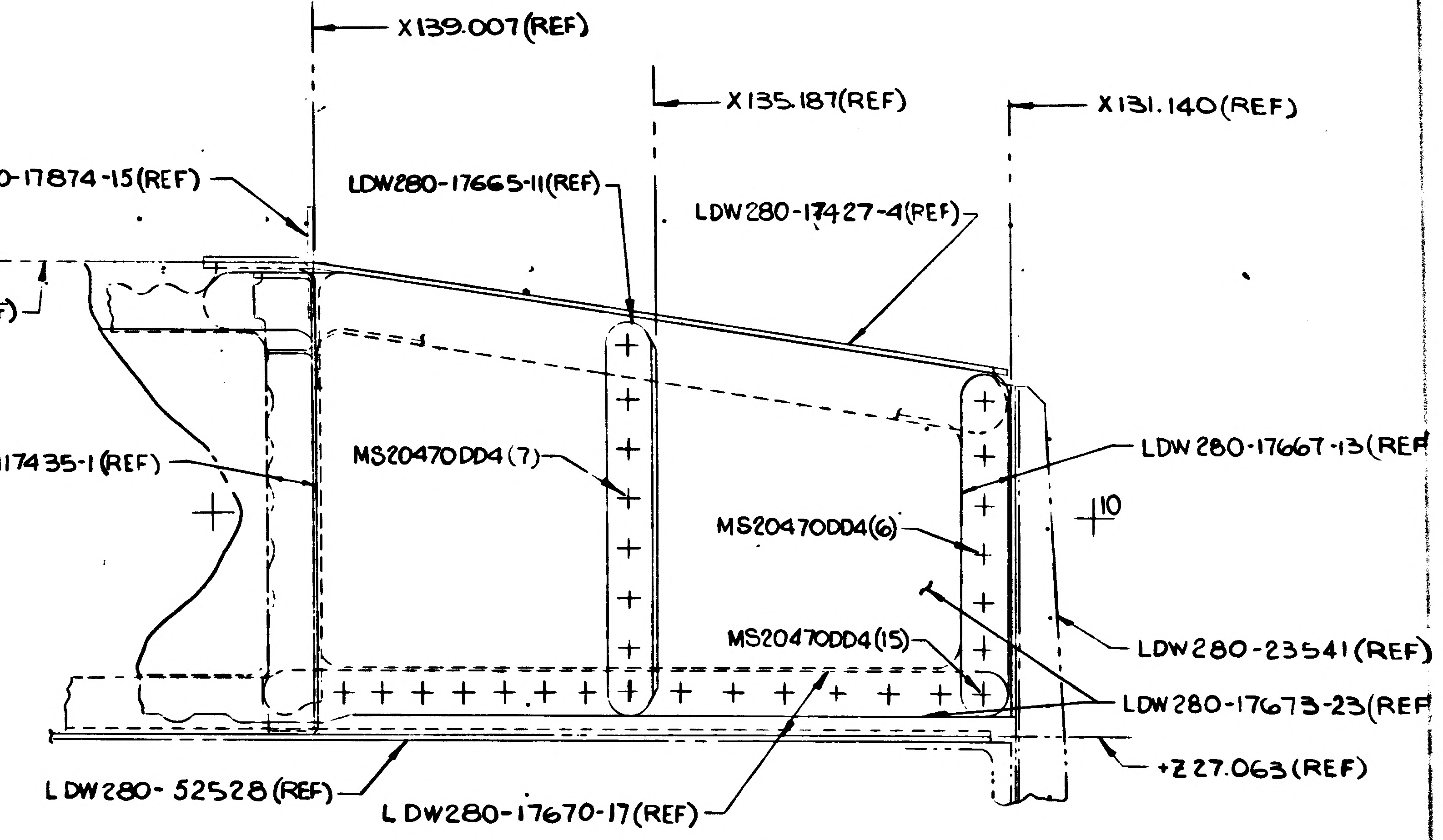

X139.007(REF)
X135.187(REF)
X131.140(REF)
LDW280-17874-15(REF)
LDW280-17665-11(REF)
LDW280-17427-4(REF)
+Z32.312(REF)
LDW280M17435-1(REF)
MS20470DD4(7)
LDW280-17667-13(REF)
MS20470DD4(6)
10
MS20470DD4(15)
LDW280-23541(REF)
LDW280-17673-23(REF)
LDW280-52528(REF)
LDW280-17670-17(REF)
+Z27.063(REF)

DETAIL M (ZONE 4J SH5)

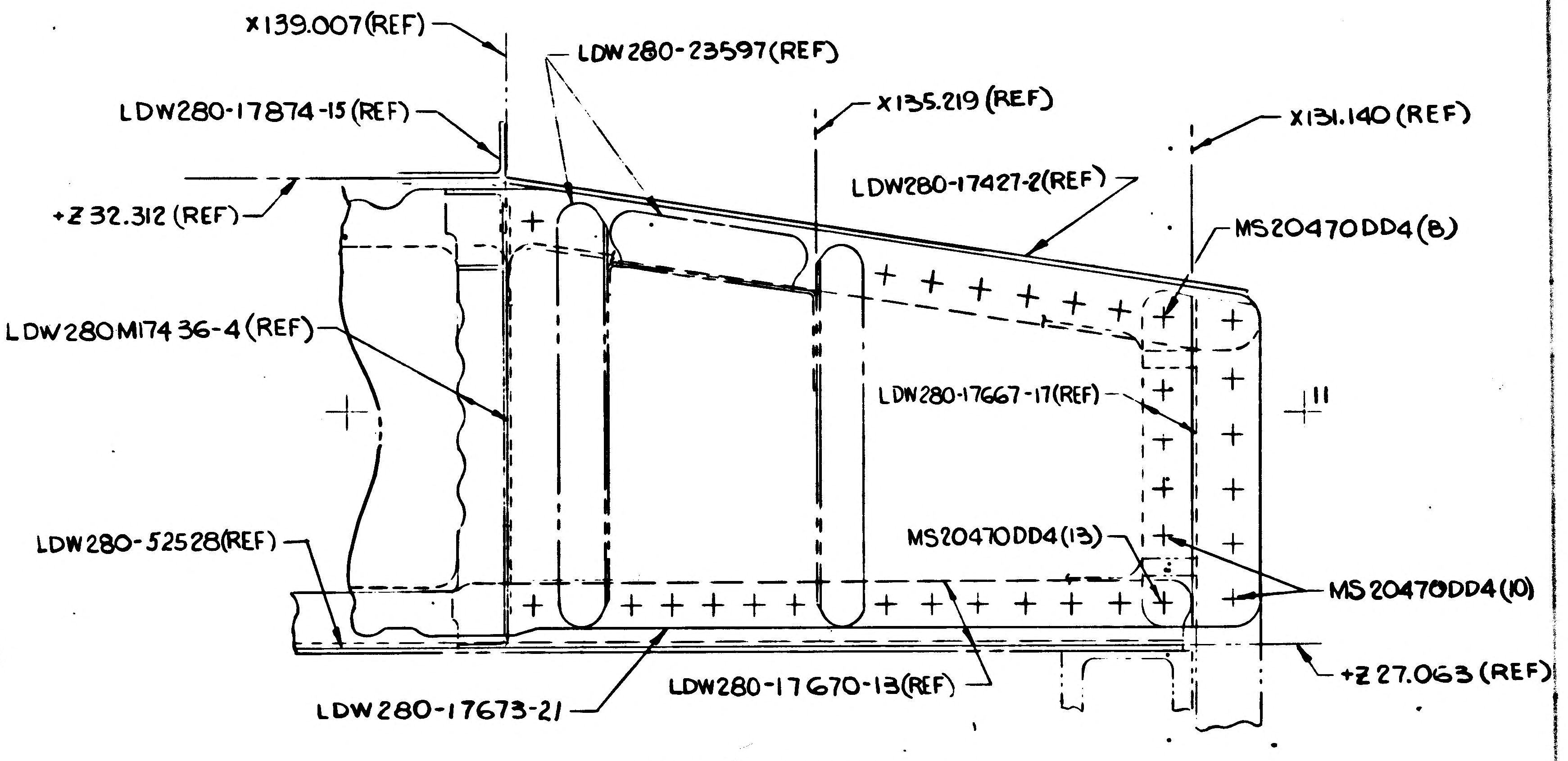

X139.007(REF)
LDW280-23597(REF)
LDW280-17874-15(REF)
X135.219(REF)
X131.140(REF)
LDW280-17427-2(REF)
+Z32.312(REF)
MS20470DD4(8)
LDW280M17436-4(REF)
LDW280-17667-17(REF)
11
LDW280-52528(REF)
MS20470DD4(13)
MS20470DD4(10)
LDW280-17670-13(REF)
+Z27.063(REF)
LDW280-17673-21

DETAIL L (ZONE 4J SH5)

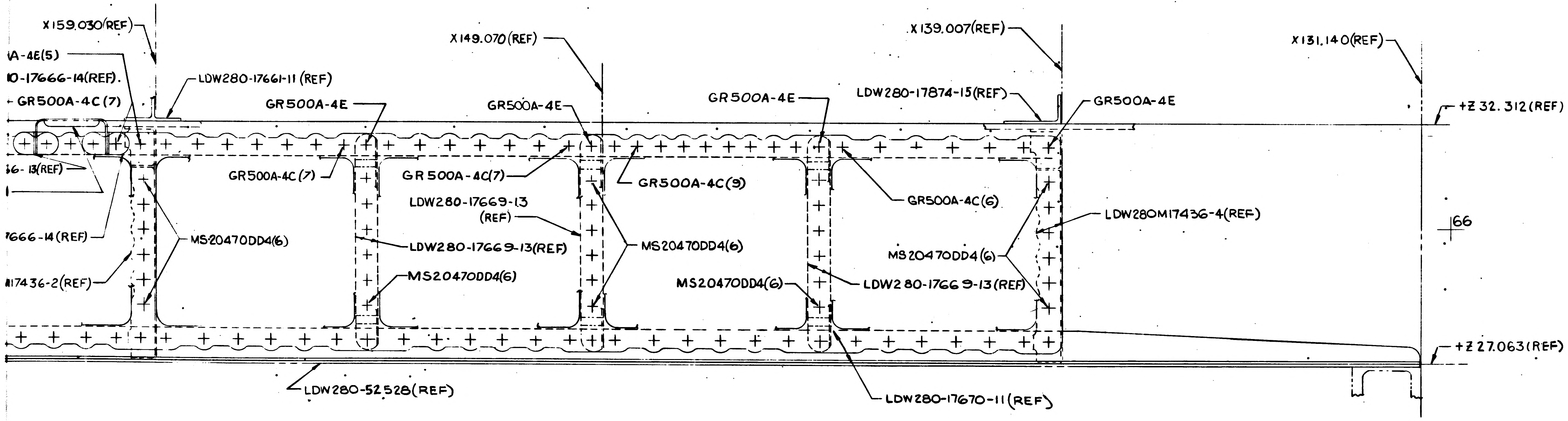

X159.030(REF)
X149.070(REF)
X139.007(REF)
X131.140(REF)
A-4E(5)
0-17666-14(REF).
GR500A-4C(7)
LDW280-17661-11 (REF)
GR500A-4E
GR500A-4E
GR500A-4E
LDW280-17874-15(REF)
GR500A-4E
+Z32.312(REF)
6-13(REF)
GR500A-4C(7)
GR500A-4C(7)
GR500A-4C(9)
GR500A-4C(6)
LDW280M17436-4(REF)
7666-14(REF)
MS20470DD4(6)
LDW280-17669-13 (REF)
LDW280-17669-13(REF)
MS20470DD4(6)
66
MS20470DD4(6)
MS20470DD4(6)
MS20470DD4(6)
LDW280-17669-13(REF)
17436-2(REF)
+Z27.063(REF)
LDW280-52528(REF)
LDW280-17670-11(REF)

SECT K-K (ZONE 2A) SH3

SECT N-N (OPP TO SECT K-K) EXCEPT AS NOTED (ZONE 2C) SH3

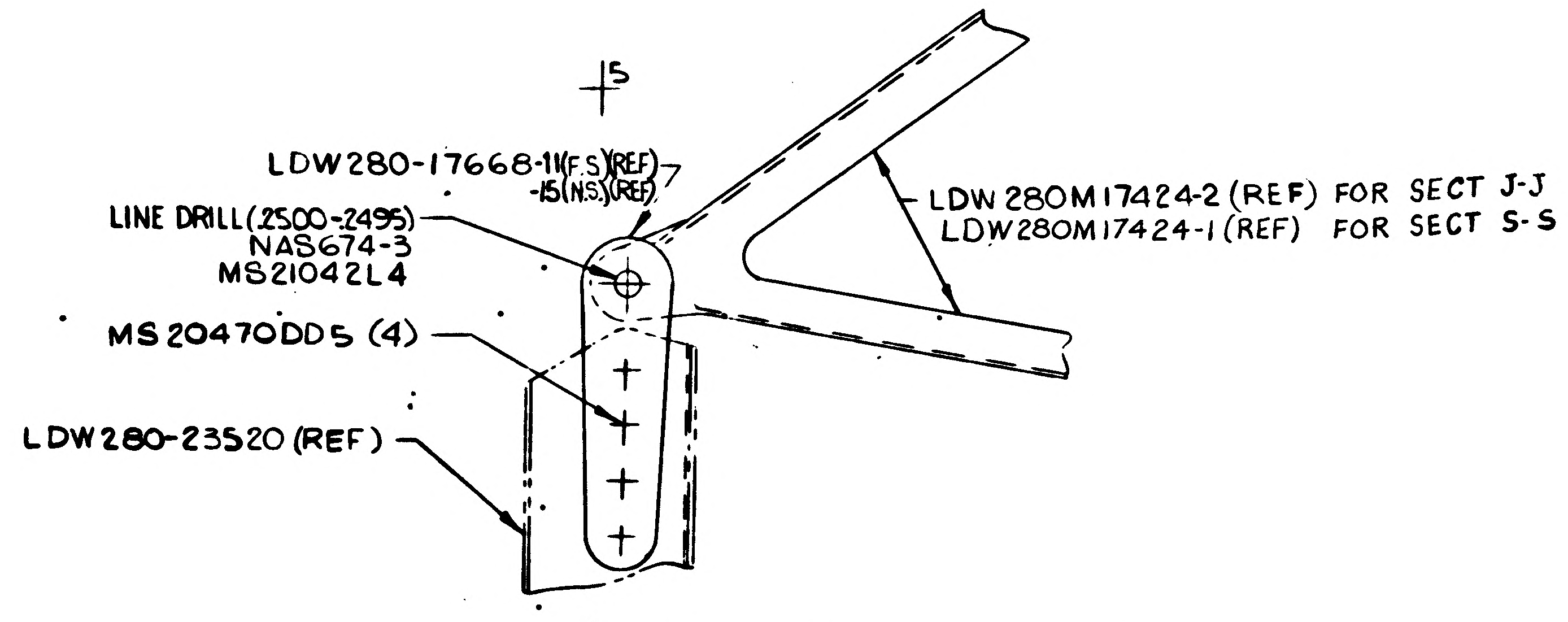

5
LDW280-17668-11(FS)(REF) -15(NS)(REF)
LINE DRILL (.2500-.2495) NAS674-3 MS21042L4
LDW280M17424-2 (REF) FOR SECT J-J
LDW280M17424-1 (REF) FOR SECT S-S
MS20470DD5 (4)
LDW280-23520 (REF)

DETAIL V (ZONE 1H SH5)

02/03 NAS 9-1100

CODE IDENT NO 26512
LDW280-52570 SH 5

CODE IDENT NO 26512
LDW280-52570 SH 5

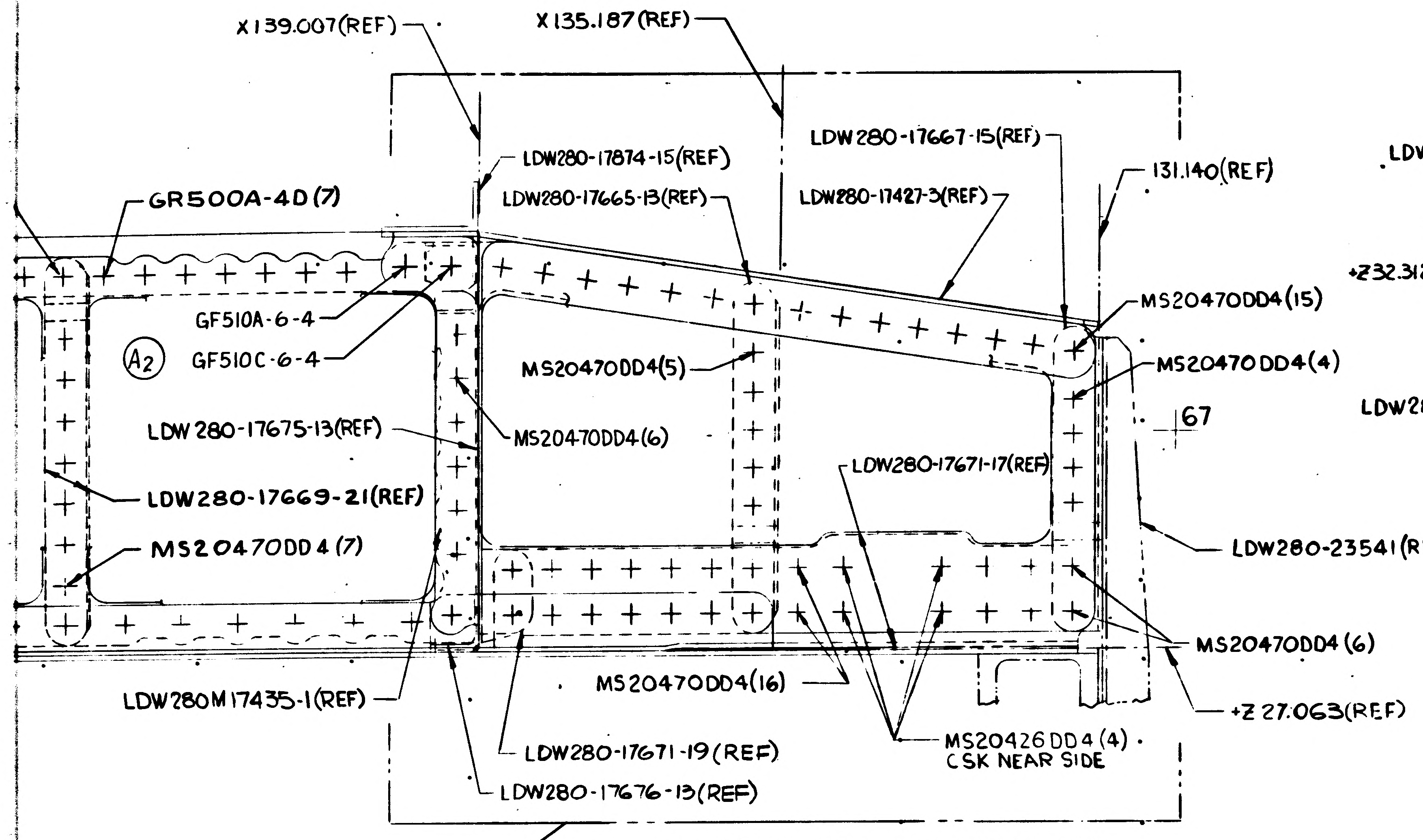
X139.007(REF)
X135.187(REF)
LDW280-17874-15(REF)
LDW280-17665-13(REF)
LDW280-17667-15(REF)
LDW280-17427-3(REF)
131.140(REF)
GR500A-4D(7)
GF510A-6-4
GF510C-6-4
A2
MS20470DD4(15)
MS20470DD4(5)
MS20470DD4(4)
67
LDW280-17675-13(REF)
MS20470DD4(6)
LDW280-17671-17(REF)
LDW280-17669-21(REF)
LDW280-23541(REF)
MS20470DD4(7)
MS20470DD4(6)
MS20470DD4(16)
+Z27.063(REF)
LDW280M17435-1(REF)
LDW280-17671-19(REF)
MS20426DD4(4)
CSK NEAR SIDE
LDW280-17676-13(REF)

SEE DETAIL "L" FOR SECT J-J ZONE 2H SH5
SEE DETAIL "M" FOR SECT B-B ZONE 2J SH5
SEE DETAIL "T" FOR SECT S-S ZONE 7E SH4

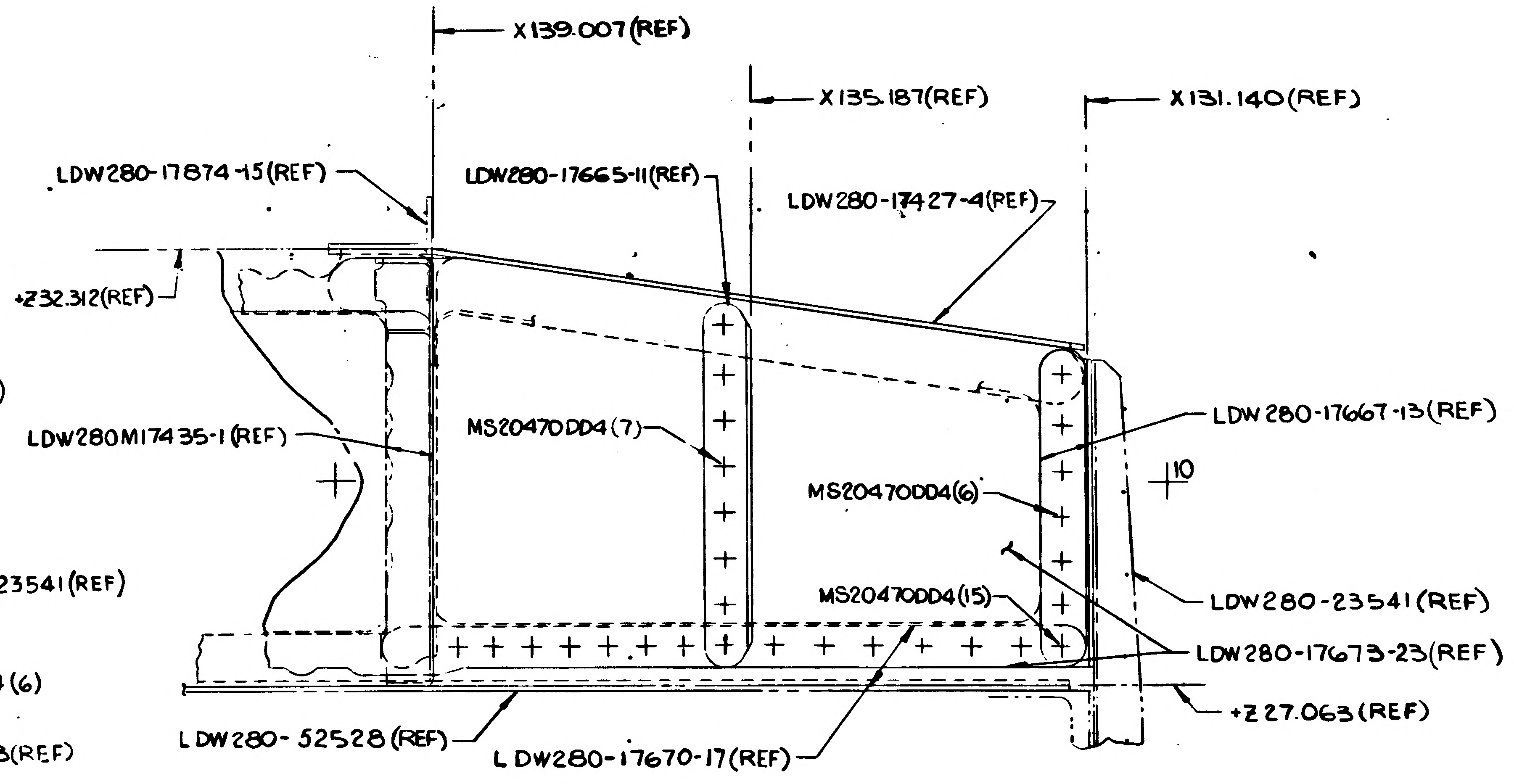
X139.007(REF)
X135.187(REF)
X131.140(REF)
LDW280-17874-15(REF)
LDW280-17665-11(REF)
LDW280-17427-4(REF)
+Z32.312(REF)
LDW280-17667-13(REF)
LDW280M17435-1(REF)
MS20470DD4(7)
10
MS20470DD4(6)
MS20470DD4(15)
LDW280-23541(REF)
LDW280-17673-23(REF)
+Z27.063(REF)
LDW280-52528(REF)
LDW280-17670-17(REF)

DETAIL M (ZONE 4J SH5)

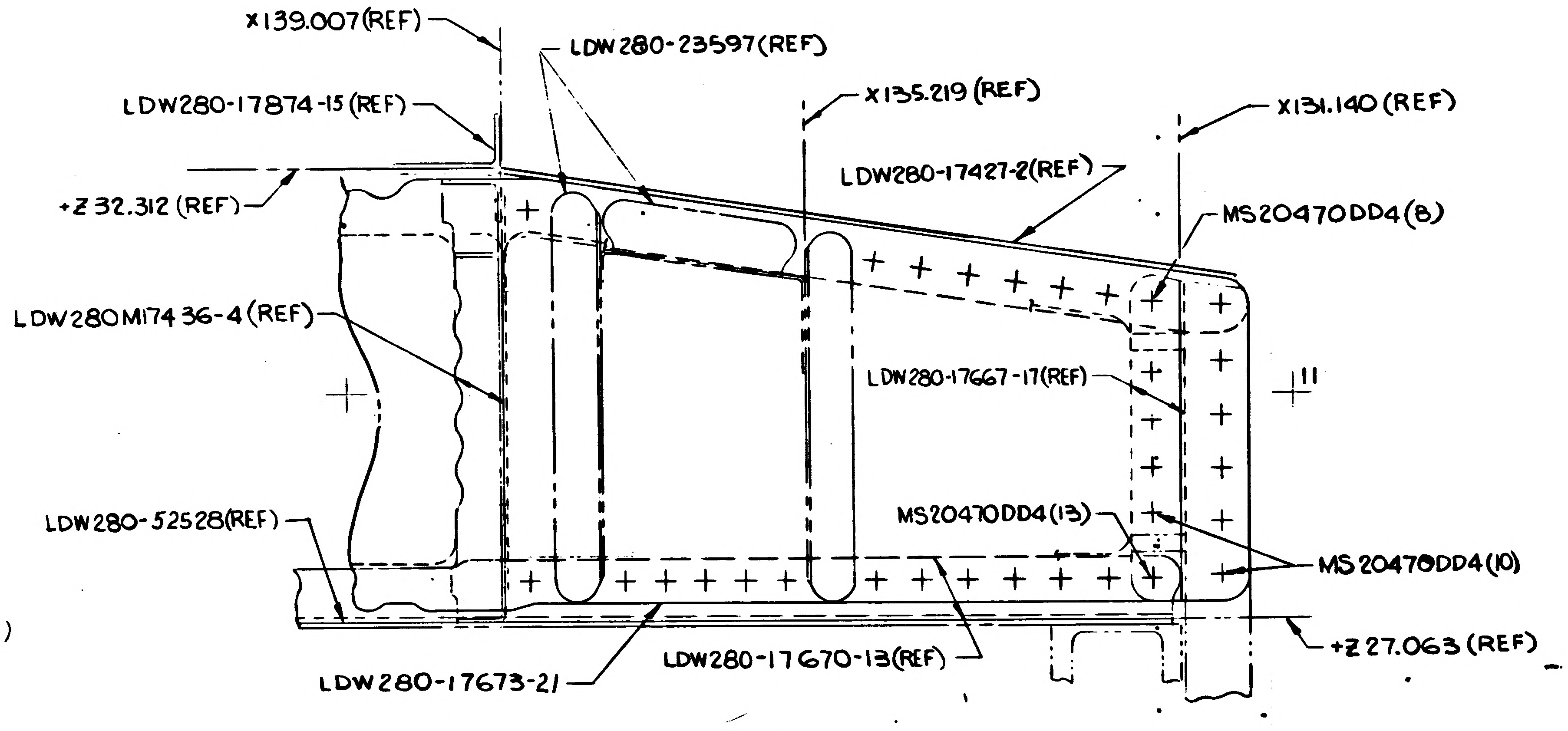
X139.007(REF)
LDW280-23597(REF)
X135.219(REF)
X131.140(REF)
LDW280-17874-15(REF)
LDW280-17427-2(REF)
+Z32.312(REF)
MS20470DD4(8)
LDW280M17436-4(REF)
LDW280-17667-17(REF)
11
LDW280-52528(REF)
MS20470DD4(13)
MS20470DD4(10)
+Z27.063(REF)
LDW280-17673-21
LDW280-17670-13(REF)

DETAIL L (ZONE 4J SH5)

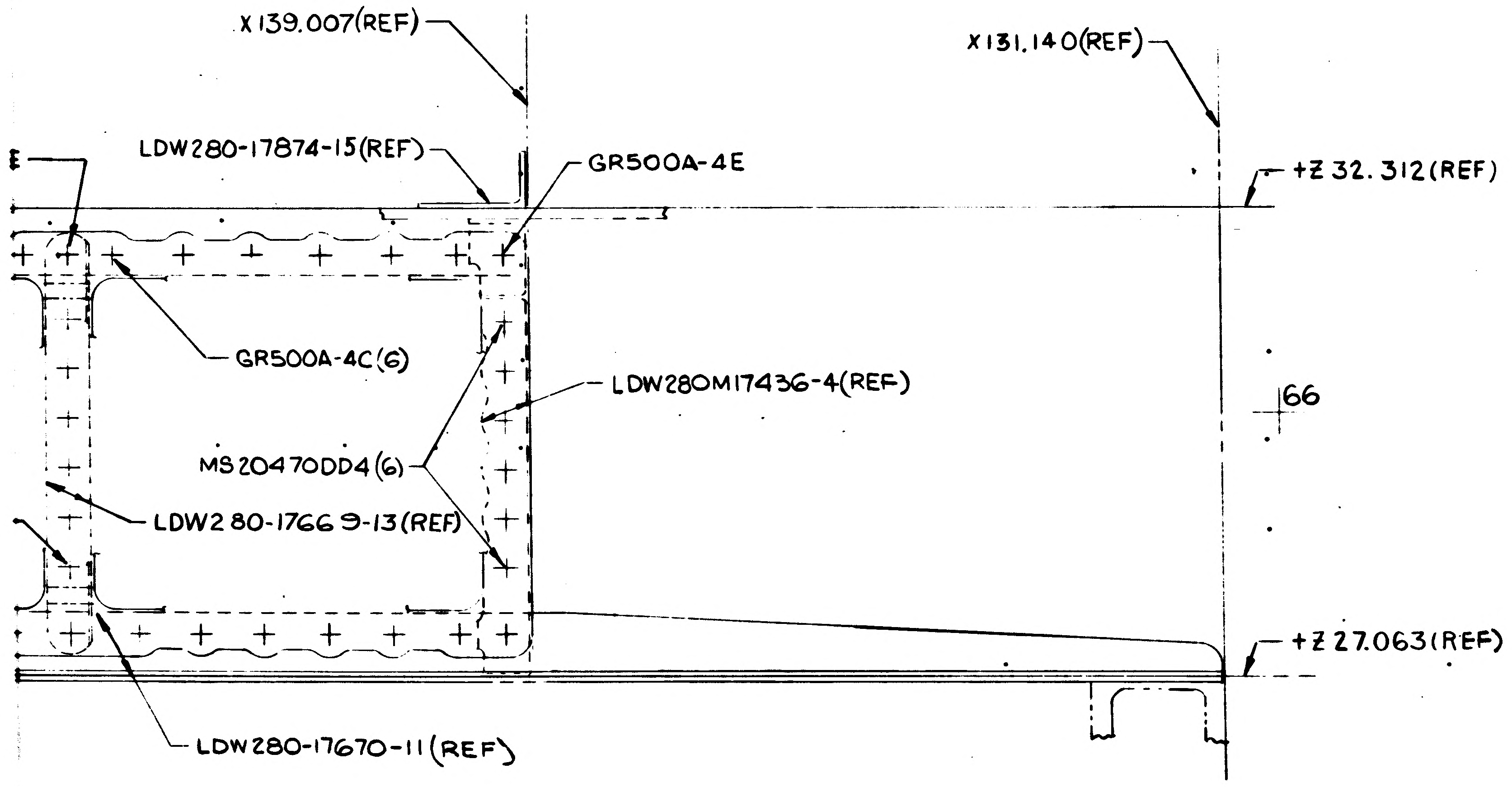
X139.007(REF)
X131.140(REF)
LDW280-17874-15(REF)
GR500A-4E
+Z32.312(REF)
GR500A-4C(6)
LDW280M17436-4(REF)
66
MS20470DD4(6)
LDW280-17669-13(REF)
+Z27.063(REF)
LDW280-17670-11(REF)

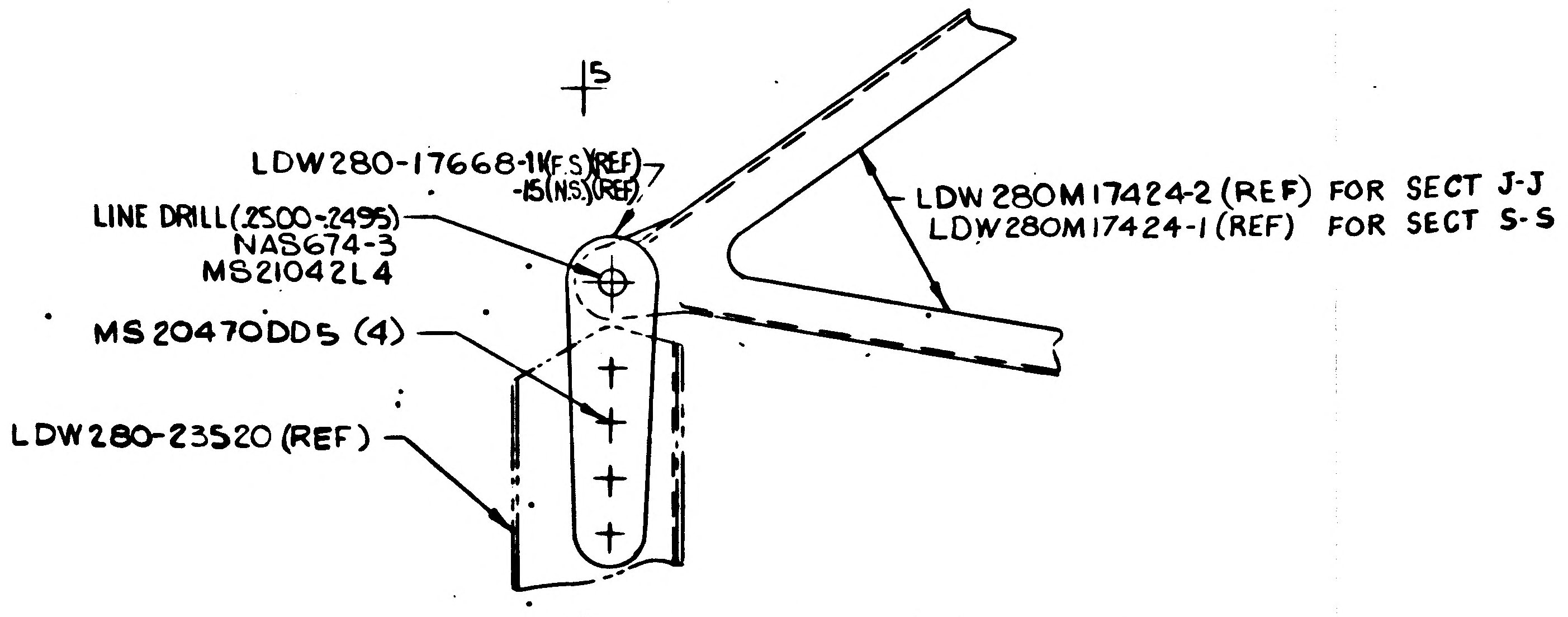
5
LDW280-17668-11(F.S.)(REF)
-15(N.S.)(REF)
LINE DRILL(.2500-.2495)
NAS674-3
MS21042L4
MS20470DD5(4)
LDW280-23520(REF)
LDW280M17424-2(REF) FOR SECT J-J
LDW280M17424-1(REF) FOR SECT S-S

DETAIL V (ZONE 10H SH5)

MANUFACTURING OPERATIONS UNLESS OTHERWISE SPECIFIED NOTES CHECKED √ APPLY TO THIS DWG.
PART NUMBER AND ALL OTHER MARKINGS IN REGION MARKED ⊠ USE BOTH SIDES IF NECESSARY.
FILLET AND INSIDE CORNER RADII TOLERANCES .016R TO .062R ± .008 .063R TO .250R ± .015 OVER .250R ± .030
DEPTH SHOWN FOR TAPPED HOLES IS FULL THDS. 2-3 IMP THDS. BEYOND PERMISSIBLE.
EXTERNAL THREAD LENGTH SHOWN INCLUDES 2 IMPERFECT THREADS MAX.
DO NOT CADMIUM PLATE & PAINT HOLES OR SURFACES MARKED WITH DOUBLE ASTERISK.
MISMATCH STEP OF ± .005 PERMISSIBLE DUE TO CHANGE OF CUTTERS AT INSIDE INTERSECTING SURFACES.
DIAMETERS MARKED MUST BE CONCENTRIC WITHIN FULL INDICATOR READING
HOLES MUST BE KEPT FREE OF CHROME PLATING SOLUTION.
ALL DIMENSIONS SHOWN TO BE MET AFTER CADMIUM PLATING. THICKNESS OF PLATE .0003 MIN. TO .0005 MAX. MIN. THICKNESS TO BE .0002 ON THREADED AREAS. NO ALLOWANCE FOR PLATING IN HOLES
125 √ SURFACE ROUGHNESS INCLUDING REAMED HOLES PER MIL-STD-10
200 √ FOR ALL DRILLED HOLES
REMOVE ALL BURRS. BREAK ALL EDGES .015-.030
INSPECTION INFORMATION MINIMUM PERMISSIBLE AVERAGE EDGE DISTANCE MARKED IS
SYMBOL √ DENOTES SURFACE TO BE MACHINED
UNLESS OTHERWISE SPECIFIED TOLERANCE ON FLANGES IS ± 1/32
LENGTHS OF AN, NAS & MS AL ALY RIVETS SHORTER THAN 1 INCH ARE NOT SPECIFIED.
TOLERANCE ON LOFTED DELINEATIONS IS

DWG SIZE 34 X 106
27.2 sq FT
PRINTING INFO ONLY
FULL SIZE SHEET AREA (36 X 108)
PRINT TRIM LINE

J
H
G

Sec 9

LDW280-52570 A
LDW280-52570 A

03/03

NAS 9-1100

Sec 5

CODE IDENT NO 26512
LDW280-52570 SH 5

GRUMMAN AIRCRAFT ENGRG CORP., BETHPAGE, L. I., NEW YORK

MODEL OR ENG PROJ	SIZE	CODE IDENT NO.		
LEM	J	26512	LDW280-52570	A
	SCALE FULL		SHEET 5.00	

FOR PHOTO REPRODUCTION K2

QTY PER ASSEMBLY -1	CODE IDENT	PART NO.	I&T	NOMENCLATURE OR DESCRIPTION	MATERIAL	GOVT SPEC	COML SPEC	STOCK SIZE	PROCESS SYM	FINISH NO.	ZONE
1		LDW280-17674-19	E	WEB	SEE DWG						4C
1		LDW280-17674-17		WEB							4C
1		LDW280-17674-15		WEB							4B
1		LDW280-17673-25		WEB							4B
1		LDW280-17673-23		WEB							4B
1		LDW280-17673-21		WEB							4A
1		LDW280-17671-23		ANGLE							4C
1		-21									4C
1		-19									3B
1		LDW280-17671-17		ANGLE							3B
1		LDW280-17670-17		ANGLE							4B
1		-15									4B
1		-13									4A
1		LDW280-17670-11		ANGLE							4A
12		LDW280-17669-22		ANGLE							7C
12		-21									7C
6		-14									4C
6		-13									7A
8		LDW280-17669-11	E	ANGLE	SEE DWG						3B

SYM OR NO.	PROCESS OR FINISH	GRUMMAN SPEC OR MILITARY SPEC	SYM OR NO.	PROCESS OR FINISH	GRUMMAN SPEC OR MILITARY SPEC	SYM OR NO.	PROCESS OR FINISH	GRUMMAN SPEC OR MILITARY SPEC

I&T: IDENTIFICATION AND TRACEABILITY IN ACCORDANCE WITH :
NONE

GRUMMAN AIRCRAFT ENGRG CORP, BETHPAGE, L. I., NEW YORK

SIZE B
CODE IDENT NO. 26512
LDW280-52570
SCALE NONE
SHEET 2.01

ENG 77.2 7-65

01 NAS 9-1100

QTY PER ASSEMBLY -1	CODE IDENT	PART NO.	I&T	NOMENCLATURE OR DESCRIPTION	MATERIAL	GOVT SPEC	COML SPEC	STOCK SIZE	PROCESS SYM	FINISH NO.	ZONE
1		LDW280M17427-4	E	FITTING	SEE DWG						3B
1		-3									3B
1		-2									3A
1		LDW280M17427-1		FITTING							3C
1		LDW280M17424-2		TRUSS							9A
1		LDW280M17424-1		TRUSS							9C
1		LDW280M17423-2		TRUSS							9B
1		LDW280M17423-1		TRUSS							9B
1		LDW280-52684-1		COLD RAIL INSTL							4B
1		LDW280-52683-2		COLD RAIL INSTL							6A
1		LDW280-52683-1		COLD RAIL INSTL							4C
1		LDW280-17874-15		TEE							3B
1		LDW280-17874-11		TEE							8B
1		LDW 280-17676-15		ANGLE							3C
1		-13									3A
4		-12									8C
2		LDW 280-17676-11		ANGLE							6C
1		LDW280-17675-15		WEB							3C
1		LDW280-17675-13		WEB							3B
6		LDW280-17675-11	E	WEB	SEE DWG						5B

SYM OR NO.	PROCESS OR FINISH	GRUMMAN SPEC OR MILITARY SPEC	SYM OR NO.	PROCESS OR FINISH	GRUMMAN SPEC OR MILITARY SPEC	SYM OR NO.	PROCESS OR FINISH	GRUMMAN SPEC OR MILITARY SPEC

I & T: IDENTIFICATION AND TRACEABILITY IN ACCORDANCE WITH :
NONE

GRUMMAN AIRCRAFT ENGRG CORP, BETHPAGE, L. I., NEW YORK

SIZE	CODE IDENT NO.	
B	26512	LDW280-52570

SCALE NONE

SHEET 2.02

ENG 77.2 7-65

01

NAS 9-1100

QTY PER ASSEMBLY -1	CODE IDENT	PART NO.	I&T	NOMENCLATURE OR DESCRIPTION	MATERIAL	GOVT SPEC	COML SPEC	STOCK SIZE	PROCESS SYM	FINISH NO.	ZONE
24		GF510A-5-4	E	RIVET BLIND	GRUMMAN STD						
12		GF510A-5-3		RIVET BLIND	GRUMMAN STD						
2		AN960D416L		WASHER	STD PART						
1		LDW280M17437-2		FITTING	SEE DWG						8A
1		LDW280M17437-1		FITTING							8C
1		LDW270M17436 -4		FITTING							3A
1		-3									3C
2		-2									5A
2		LDW270M17436-1		FITTING							5C
4		LDW270M17435-1	E	FITTING	SEE DWG						3B

SYM OR NO.	PROCESS OR FINISH	GRUMMAN SPEC OR MILITARY SPEC	SYM OR NO.	PROCESS OR FINISH	GRUMMAN SPEC OR MILITARY SPEC	SYM OR NO.	PROCESS OR FINISH	GRUMMAN SPEC OR MILITARY SPEC

I & T: IDENTIFICATION AND TRACEABILITY IN ACCORDANCE WITH :
NONE

GRUMMAN AIRCRAFT ENGRG CORP, BETHPAGE, L. I., NEW YORK

SIZE	CODE IDENT NO.	
B	26512	LDW280-52570

SCALE NONE

SHEET 2.03

ENG 77.2 7-65

01

NAS 9-1100

ENG 32.1 REV 3-65

*

GRUMMAN AIRCRAFT ENGINEERING CORP.

CODE IDENT NO. 26512

ENGINEERING ORDER

DWG. NO. LDW280-52570		EO NO. A2
CONTROL INFO NO. LM-2-2793		

ON-1 IN B/M & F/D REVISE FASTENER CALLOUT & ADD NOTE TO F/D. TO AGREE WITH EO.

SHEET 2.04 B/M.

GF510A-6-4 (4) RIVET BLIND (WAS) GF510A-6-4 (2) RIVET BLIND

(ADD)

GF510C-6-4 (4) ~ RIVET BLIND

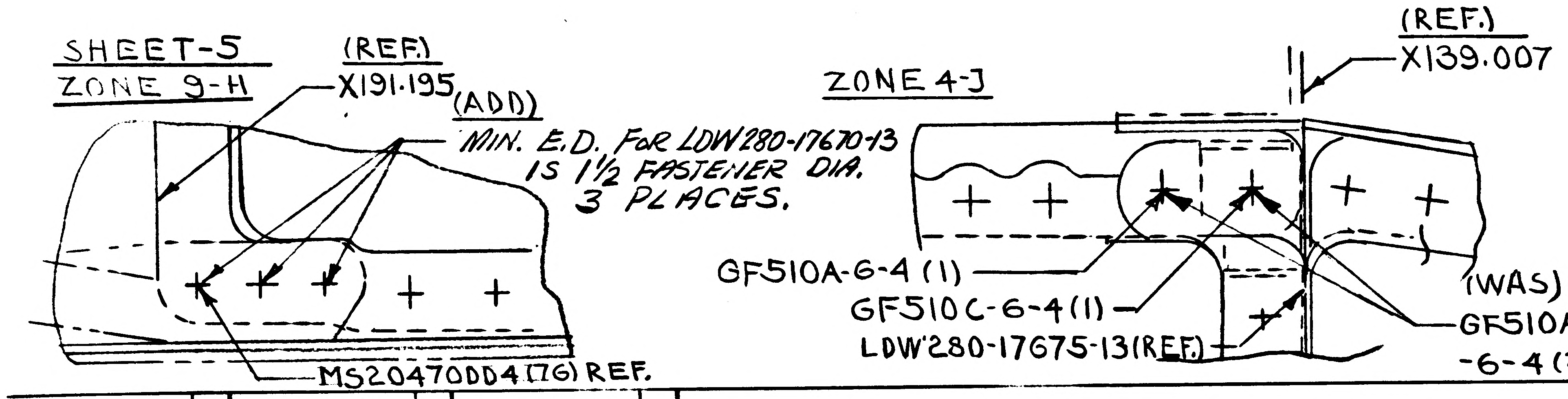
SHEET-5
ZONE 9-H
(REF.)
X191.195
(ADD)
MIN. E.D. FOR LDW280-17670-13 IS 1½ FASTENER DIA. 3 PLACES.
MS20470DD4 (76) REF.
ZONE 4-J
(REF.)
X139.007
GF510A-6-4 (1)
GF510C-6-4 (1)
LDW280-17675-13 (REF.)
(WAS)
GF510A-6-4 (2)

DETAIL SPEC REQ		CL II ENGRG CHG		CL I ENGRG CHG	

REASON FOR EO

INACCESSIBILITY TO GF510A-6-4 (4 PLCS) INCORRECT FASTENER CALLOUT IN B.M. MINIMUM E.D. REQ'D FOR LDW280-17670-13

DESCRIPTION OF EO

ON-1: IN B/M ADDED: GF510C-6-4 (4) ~ GF510A-6-4 (4) WAS (2) IN F/D GF510A-6-4 (1) & GF510C-6-4 (1) WAS GF510A-6-4 (2) ADDED: MIN. E.D. FOR LDW280-17670-13.

GAEC EO RELEASE

MODEL	EFFECTIVITY		
	PROCURING ACTIVITY NO.	GAEC UNIT NO.	SUB CONTR UNIT NO.
LM.		LM-3 (33)	
		LM-2 (32)	

DRAWING CHANGE REQD		DISPOSITION OF PARTS	
✓		✓	
REVISE DWG	RECORD EO	REWORK	SCRAP

APPROVED BY	JRS				caw	caw	RMC (E)	
DATE	10/8				9-26-66	9-26-66	9-27	9-26-66
9-20-66	VD1	SUPPORT	RELIAB. GROUP	GROUP LEADER	STRESS GROUP	LIAISON ENGRG	PROJ ENGRG	~~GOVT~~

PRIORITY	DRAWING TITLE	DRAWING NO.	EO NO.
C2	COLD RAIL INSTALLATION ~ DESCENT STAGE ~ R.H. FWD. BEAM PNL. - E.P.S. & EDRS	LDW280-52570	A2

ISSUED BY LIAISON T.J. MARTIN - X3604 SECTION V.D.1 GROUP NO. 335 PL 35

01

NAS 9-1100

GRUMMAN AIRCRAFT ENGINEERING CORP.
CODE IDENT NO. 26512
ENGINEERING ORDER

DWG. NO. LDW280-52570 EO-NO. B1
CONTROL INFO NO. LDW280-9996

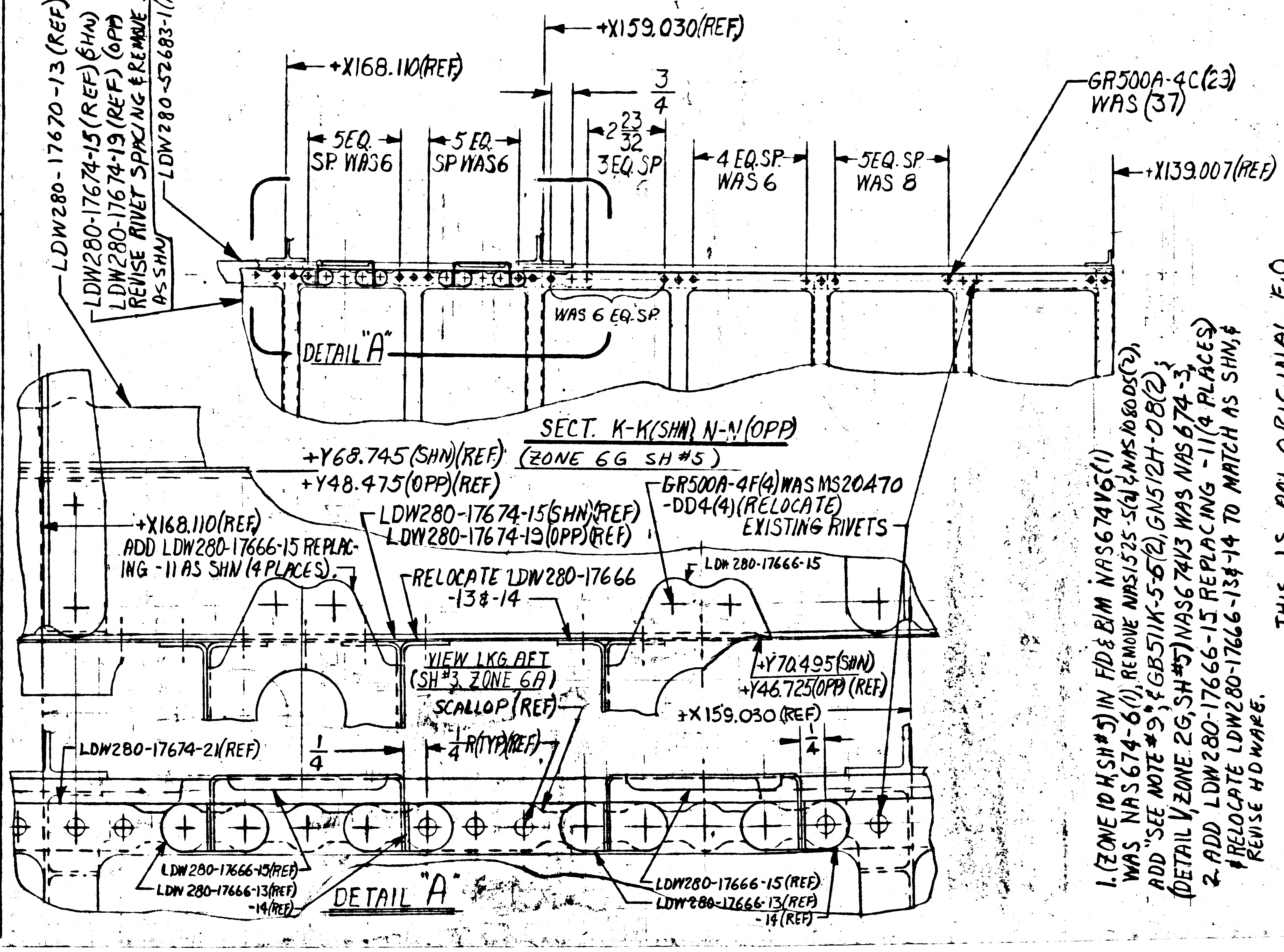
LDW280-17670-13 (REF)
LDW280-17674-15 (REF) (SHN)
LDW280-17674-19 (REF) (OPP)
REVISE RIVET SPACING & REMOVE SCALLOPS AS SHN
LDW280-52683-1 (REF)
+X159.030 (REF)
+X168.110 (REF)
3/4
5 EQ. SP. WAS 6
5 EQ. SP WAS 6
2 23/32
3 EQ. SP
4 EQ. SP. WAS 6
5 EQ. SP. WAS 8
GR500A-4C(23) WAS (37)
+X139.007 (REF)
WAS 6 EQ. SP.
DETAIL "A"
SECT. K-K (SHN) N-N (OPP)
(ZONE 6G SH #5)
+Y68.745 (SHN) (REF)
+Y48.475 (OPP) (REF)
GR500A-4F(4) WAS MS20470-DD4(4) (RELOCATE) EXISTING RIVETS
+X168.110 (REF)
ADD LDW280-17666-15 REPLACING -11 AS SHN (4 PLACES)
LDW280-17674-15 (SHN) (REF)
LDW280-17674-19 (OPP) (REF)
RELOCATE LDW280-17666 -13 & -14
LDW280-17666-15
VIEW LKG AFT (SH #3, ZONE 6A)
SCALLOP (REF)
+Y70.495 (SHN)
+Y46.725 (OPP) (REF)
+X159.030 (REF)
LDW280-17674-21 (REF)
1/4
1/4 R (TYP) (REF)
1/4
LDW280-17666-15 (REF)
LDW280-17666-13 (REF)
-14 (REF)
DETAIL "A"
LDW280-17666-15 (REF)
LDW280-17666-13 (REF)
-14 (REF)

1. (ZONE 10H, SH #5) IN F/D & B/M NAS674V6 (1) WAS NAS674-6 (1), REMOVE NAS1525-5 (2) & NAS1080DS (2), ADD "SEE NOTE #9" & GB511K-5-6 (2), GN512H-08 (2); (DETAIL V, ZONE 2G, SH #5) NAS674V3 WAS NAS674-3,
2. ADD LDW280-17666-15 REPLACING -11 (4 PLACES) & RELOCATE LDW280-17666-13 & -14 TO MATCH AS SHN, & REVISE HDWARE.

THIS IS AN ORIGINAL E.O.

DETAIL SPEC REQ	CL II ENGRG CHG	CL I ENGRG CHG	✓	DESCRIPTION OF EO
REASON FOR EO: REVISED WEBS TO AGREE WITH COLD PLATE SCALLOPING.				ADDED GB511K-5-6(2), GN512H-08(2), LDW280-17666-15(4) & GR500A-4C(58), NAS674V3 & V6; REMOVED GR500A-4C(74), NAS674-3 & -6, NAS1525-5(2), NAS1080DS(2), LDW280-17666-11(4), REVISED RIVET SPACING, RELOCATED LDW280-17666-13 & -14, GR500A-4F(8) WAS MS20470-DD4(8).

MODEL	PROCURING ACTIVITY NO.	GAEC UNIT NO.	SUB CONTR UNIT NO.
LEM		LEM-2 (32)	
LEM		&	
LEM		LEM-3 (33)	

DRAWING CHANGE REQD	REVISE DWG	RECORD EO	DISPOSITION OF PARTS	REWORK	SCRAP	APPROVED BY	DATE
	✓			✓			9-15-66

	SUPPORT	RELIAB. GROUP	GROUP LEADER	STRESS GR. UP	LIAISON ENGRG	PROJ ENGRG	GAEC C EO RELEASE
APPROVED BY	YAS			WJW			FK
DATE	9/28/66			10/4/66		10-10-66	10/11/66

PRIORITY: C
DRAWING TITLE: COLD RAIL INSTALLATION D.S. ~ BEAM PNL ~ E.PS, EDBS & EPS EQ SPT.
DRAWING NO. LDW280-52570
EO NO. B1
R. QUEVEDO / J. ROGERS / J. STRAKOSCH X1392
VDI
SECTION VEH DES & INT.
GROUP NO. 335 BL 35

01

NAS 9-1100

4 R

ENG 32.2 REV 3-65

GRUMMAN AIRCRAFT ENGINEERING CORP.
CODE IDENT NO. 26512
ENGINEERING ORDER

DWG. NO.	LDW280-52570	EO NO.	B2
CONTROL INFO NO.	LM-2-3005		

① IN F/D ADD THE FOLLOWING TO THE NOTE COLUMN:

NOTE * - CLEAN ALL TITANIUM-ALUMINUM ALLOY FAYING SURFACES PER LSP 14-7011 (SOLVENT WIPE), MIX EPON 919 PER LSP 14-14102 & BRUSH COAT EPON 919 ON FAYING SURFACES. INSTALL FASTENERS WET. REMOVE EXCESS SQUEEZE OUT. COAT FASTENERS ON TITANIUM SIDE WITH EPON 919.

* STANDS FOR NEXT AVAILABLE NUMBER.

②

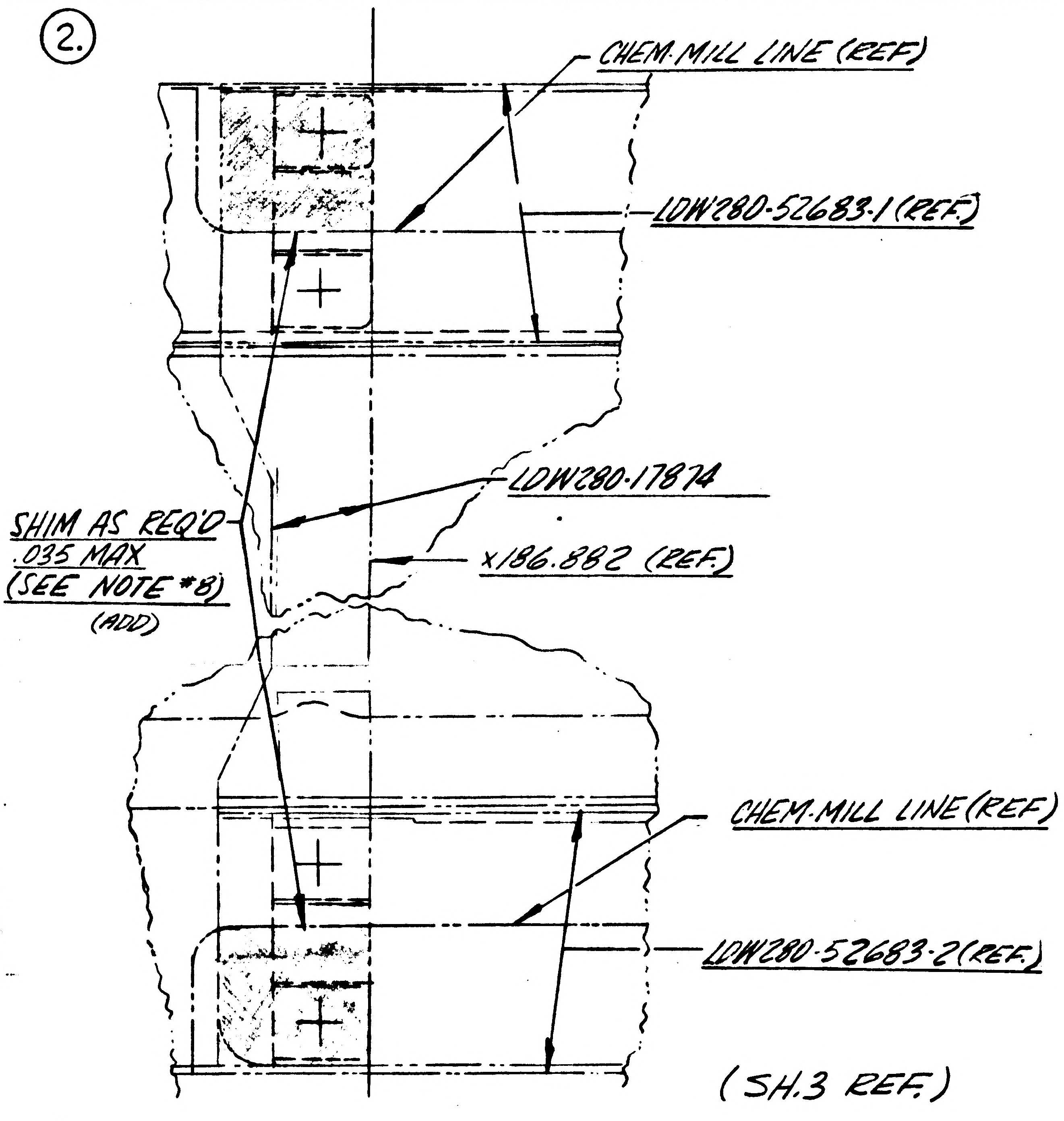
CHEM-MILL LINE (REF)
LDW280-52683-1 (REF)
LDW280-17874
SHIM AS REQ'D .035 MAX (SEE NOTE *8) (ADD)
x186.882 (REF)
CHEM-MILL LINE (REF)
LDW280-52683-2 (REF)

(SH.3 REF.)

01
NAS 9-1100

DETAIL SPEC REQ	☐	CL II ENGRG CHG	☐	CL I ENGRG CHG ☐

2

REASON FOR EO

1.- DISSIMILAR METAL REQT'S.
2.- SHIM REQ'D TO FILL VOID.

DESCRIPTION OF EO

IN NOTE BLK:
ADDED NOTE *. IN F/D: ADDED "SHIM AS REQ.D .035 MAX. SEE NOTE 8"

GAEC EO RELEASE: FR 02025

MODEL	PROCURING ACTIVITY NO.	GAEC UNIT NO.	SUB CONTR UNIT NO.
LM		LM-2 (32)	
LM		LM-3 (33)	

DRAWING CHANGE REQD: REVISE DWG	RECORD EO	DISPOSITION OF PARTS: REWORK	SCRAP
✓		✓	

		SUPPORT	RELIAB. GROUP	GROUP LEADER	STRESS GROUP	LIAISON ENGRG	PROJ ENGRG	GOVT
APPROVED BY	JBJ				caw	CEW	RMC	
DATE	11/14/66				11/18/66	11/18/66	11-22-66	11/22/66
-/-	VDI							

PRIORITY	DRAWING TITLE	DRAWING NO.	EO NO.
C	COLD RAIL INSTALLATION - D.S. - R.H. FWD. BEAM PANEL - E.P.S. & EORS & EPS. ECA SPT.	LDW280-52570	B2

ISSUED BY [illegible] / E NEFF 11-16-66 X3604 SECTION V.D.I. GROUP NO. 335 PL 35

WH

ENG 32.1 REV 3-65

GRUMMAN AIRCRAFT ENGINEERING CORP.
CODE IDENT NO. 26512
ENGINEERING ORDER

DWG. NO. LDW280-52570		EO NO. B3
CONTROL INFO NO. LM-2-3772		

ON -1 INSTL

IN B/M

LDW280-52684-1 I&T "E" S/B "S"
LDW 280-52683-2 I&T "E" S/B "S"
LDW 280-52683-1 I&T "E" S/B "S"

2

DETAIL SPEC REQ	☐	CL II ENGRG CHG	☑	CL I ENGRG CHG	☐

REASON FOR EO: I&T REQTS NOT CORRECTLY SHOWN IN B/M

DESCRIPTION OF EO: IN B/M -1 INSTL LDW280-52684-1, LDW280-52683-2 & LDW280-52683-1 I&T REQTS "S" WAS "E"

GAEC EO RELEASE: 02131

MODEL	EFFECTIVITY: PROCURING ACTIVITY NO.	GAEC UNIT NO.	SUB CONTR UNIT NO.
LM		NOT REQD	

DRAWING CHANGE REQD: REVISE DWG	RECORD EO	DISPOSITION OF PARTS: REWORK	SCRAP
✓		✓	

	APPROVED BY							
DATE	7/29/67				7/25/67	7/26/67	7/29/67	7/25/67
	VII	SUPPORT	RELIAB. GROUP	GROUP LEADER	STRESS GROUP	LIAISON ENGRG	PROJ ENGRG	

PRIORITY	DRAWING TITLE	DRAWING NO.	EO NO.
E	COLD RAIL INSTL D/S ~ R.H. FWD BEAM PNL	LDW280-52570	B3

ISSUED BY LIAISON C. FARLEY / X3604 SECTION YD1 GROUP NO. 335 PL 25

01 NAS 9-1100

ENG 32.1 REV 3-65

GRUMMAN AIRCRAFT ENGINEERING CORP.
CODE IDENT NO. 26512
ENGINEERING ORDER

DWG. NO. LDW280-52570
EO NO. B4
CONTROL INFO NO. LM-5-19470

ON-1 INST'L

ADD THE FOLLOWING NOTE:

* BLIND RIVET TAILS, AS RESULT OF RIVET REMOVAL, MAY REMAIN INSIDE THE ENCLOSED STRUCTURE.

RELEASED BY LIAISON

* USE NEXT AVAILABLE NOTE NO.

(5)

DETAIL SPEC REQ ☐ CL II ENGRG CHG ☐ ✓ CL I ENGRG CHG ☐

REASON FOR EO: DURING PAST REWORK OPERATIONS IT WAS IMPOSIBLE TO RETRIEVE RIVET TAILS IN ENCLOSED AREAS (REF) CRAB 299 PIRR E1349

DESCRIPTION OF EO: ON-1 INST'L ADDED NOTE *

GAEC EO RELEASE: J/C 025

MODEL	PROCURING ACTIVITY NO.	GAEC UNIT NO.	SUB CONTR UNIT NO.
LM		LM-3 (33)	

DRAWING CHANGE REQD: ✓ REVISE DWG ☐ RECORD EO

DISPOSITION OF PARTS: ✓ REWORK ☐ SCRAP

	VDI	SUPPORT	RELIAB. GROUP	GROUP LEADER	STRESS GROUP	LIAISON ENGRG	ENGRG	~~GOVT~~
APPROVED BY				—		CH		
DATE	3/29/68			—	3-23-68	3-23-68	3/29/68	3/23/68
3-2365								

PRIORITY: C

DRAWING TITLE: COLD RAIL INST'L D/S-RH FWD BEAM PNL EPS & EDBS & EPS ECA SPT

DRAWING NO. LDW280-52570

EO NO. B4

ISSUED BY LIAISON, P. HUSTED, 86755 SECTION V.D.I. GROUP NO. 335 PL 25

01 NAS 9-1100

LDW280-52571

MODEL OR END ITEM	NEXT ASSY	MODULE OR SER NO.	REQD PER MODULE OR END ITEM
LM	LDW280-52574	QUAL TEST(70)	1
		LM-15(45)	1
		LM-14(44)	1
		LM-13(43)	1
		LM-12(42)	1
		LM-11(41)	1
		LM-10(40)	1
		LM-9(39)	1
		LM-8(38)	1
		LM-7(37)	1
		LM-6(36)	1
		LM-5(35)	1
		LM-4(34)	1
		LM-3(33)	1
LM	LDW280-52574	LM-2(32)	1

PART NO. LDW280-52571-1

GAEC SCH NO. 52

WORK PKG FUNCTION 110 LCD 809 2

SH REV STATUS: FOR DESCRIPTION OF REV SEE SUBQ SH

SHEET	1.00		2.00	3.00
REV				
SHEET				
REV				
SHEET				
REV				

LAST SECT LTR USED

LAST DASH NO. USED -11

GRUMMAN REL INFO

PRIM NO. 207 JK(001) MP-14 4/4/7

UNLESS OTHERWISE SPECIFIED DIMENSIONS ARE IN INCHES.
TOLERANCE UNLESS SPECIFIED
FRACTIONS - DECIMALS - ANGLES
±1/32 ±.020 ±1/2°

ORIG DWG AUTH
DETAIL SPEC REQUIREMENT
CLASS II ENGRG CHANGE
CLASS I ENGRG CHANGE ✓

CONTRACT NO. NAS 9-1100
LINE ITEM 1
DOCUMENTATION TYPE II

DRAWN BY	A. SCHMADTKE	RELIABILITY	
LAYOUT BY	D. WINK Wink 3/31/67	THERMO	
CHECKED BY	JB 3-30-67		
GR LEADER	3/31/67		
VEH DES INT	3/31/67		
STRUCTURES	3/31/67	PROJ ENGR	D.G. McClaglin 4/3/67
STRUCTURES		REL GROUP	4/4/67
WEIGHTS			

GRUMMAN AIRCRAFT ENGRG CORP
BETHPAGE, L. I., NEW YORK

SHIELD ASSY
DESCENT STAGE - LANDING RADAR REFLECTOR
THERMAL

SIZE B CODE IDENT NO. 26512 LDW280-52571

SCALE NONE SHEET 1.00 OF 3

C.D.R. 3/31/67

ENG 77.1 12-65

01

NAS 9-1100

CL	QTY PER ASSEMBLY -3	QTY PER ASSEMBLY -1	CODE IDENT	PART NO.	I&T	NOMENCLATURE OR DESCRIPTION	MATERIAL	GOVT SPEC	COML SPEC	STOCK SIZE	PROCESS SYM	FINISH NO.	ZONE
C	AS REQ'D			GT835P-8		TAPE	SEE NOTE 4						
C	AS REQD			SEE NOTES 2 & 3	E	MESH							
C	1	1		LDW280-52571-11		FOIL	SEE NOTES 2 & 5				NONE	NONE	
C		2		LDW280-52571-3		FOIL ASSY					SEE NOTE 2	NONE	
C				LDW280-52571-1	E	SHIELD ASSY							

CL- CLEANLINESS LEVEL PER LSP14-0011

SYM OR NO.	PROCESS OR FINISH	GRUMMAN SPEC OR MILITARY SPEC	SYM OR NO.	PROCESS OR FINISH	GRUMMAN SPEC OR MILITARY SPEC	SYM OR NO.	PROCESS OR FINISH	GRUMMAN SPEC OR MILITARY SPEC

I & T: IDENTIFICATION AND TRACEABILITY IN ACCORDANCE WITH : NONE

GRUMMAN AIRCRAFT ENGRG CORP, BETHPAGE, L. I., NEW YORK

SIZE	CODE IDENT NO.	
B	26512	LDW280-52571

SCALE NONE

SHEET 2.00

ENG 77.2 7-65

01

NAS 9-1100

LDW280-52571

NOTES:
1. NO TOOLING HOLES PERMITTED IN PARTS.
2. FABRICATE PER LPC280-19.
3. INCONEL KNITTED SLEEVING MAY BE PURCHASED FROM MONTGOMERY METAL FABRIC CO., 59 CANAL ST WINDSOR LOCKS, CONN (CODE IDENT 94725).
4. TAPE EDGES PER LPC 280-4.
5. MAKE -11 FROM .0005 THICK NICKEL FOIL, INCO 200.

MANUFACTURING OPERATIONS
UNLESS OTHERWISE SPECIFIED
NOTES CHECKED ✓ APPLY TO THIS DWG.

PART NUMBER AND ALL OTHER MARKINGS IN REGION MARKED ☒ USE BOTH SIDES IF NECESSARY.	
FILLET AND INSIDE CORNER RADII TOLERANCES .016R TO .062R ± .010 .063R TO .250R ± .015 OVER .250R ± .030	
DEPTH SHOWN FOR TAPPED HOLES IS FULL THDS. 2-3 IMP. THDS. BEYOND PERMISSIBLE	
EXTERNAL THREAD LENGTH SHOWN INCLUDES 2 IMPERFECT THREADS MAX.	
DO NOT CADMIUM PLATE & PAINT HOLES OR SURFACES MARKED WITH DOUBLE ASTERISK.	
MISMATCH STEP OF ± .005 PERMISSIBLE DUE TO CHANGE OF CUTTERS AT INSIDE INTERSECTING SURFACES.	
DIAMETERS MARKED MUST BE CONCENTRIC WITHIN FULL INDICATOR READING	
HOLES MUST BE KEPT FREE OF CHROME PLATING SOLUTION.	
ALL DIMENSIONS SHOWN TO BE MET AFTER CADMIUM PLATING. THICKNESS OF PLATE .0003 MIN TO .0005 MAX. MIN THICKNESS TO BE .0002 ON THREADED AREAS. NO ALLOWANCES FOR PLATING IN HOLES	
125 SURFACE ROUGHNESS INCLUDING REAMED HOLES PER MIL-STD-10	
200 FOR ALL DRILLED HOLES	
REMOVE ALL BURRS. BREAK ALL EDGES .015-.031	
INSPECTION INFORMATION MINIMUM PERMISSIBLE AVERAGE EDGE DISTANCE MARKED IS	
SYMBOL √ DENOTES SURFACE TO BE MACHINED	
UNLESS OTHERWISE SPECIFIED TOLERANCE ON FLANGES IS ± 1/32	
LENGTHS OF AN, NAS & MS AL ALY RIVETS SHORTER THAN 1 INCH ARE NOT SPECIFIED	
TOLERANCE ON LOFTED DELINEATIONS IS	

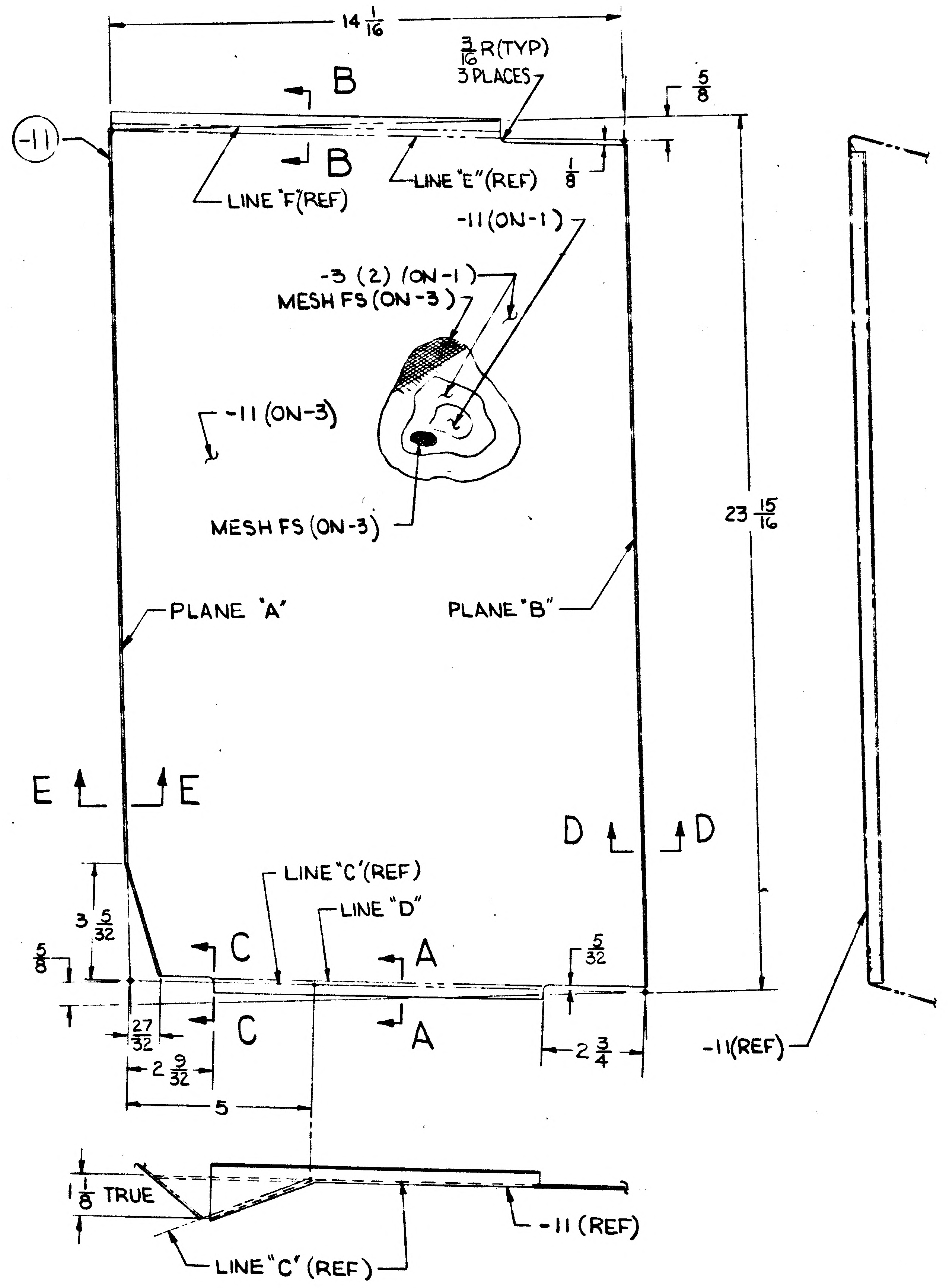

14 1/16
3/16 R(TYP) 3 PLACES
5/8
B
B
-11
LINE "F"(REF)
LINE "E"(REF)
1/8
-11 (ON-1)
-3 (2) (ON-1)
MESH FS (ON-3)
-11 (ON-3)
MESH FS (ON-3)
23 15/16
PLANE "A"
PLANE "B"
E
E
D
D
LINE "C"(REF)
LINE "D"
3 5/32
5/8
C
C
A
A
5/32
27/32
2 9/32
5
2 3/4
-11(REF)
1 1/8 TRUE
LINE "C" (REF)
-11 (REF)

LDW280-52571-1 SHIELD ASSY
-3 FOIL ASSY
HALF SCALE

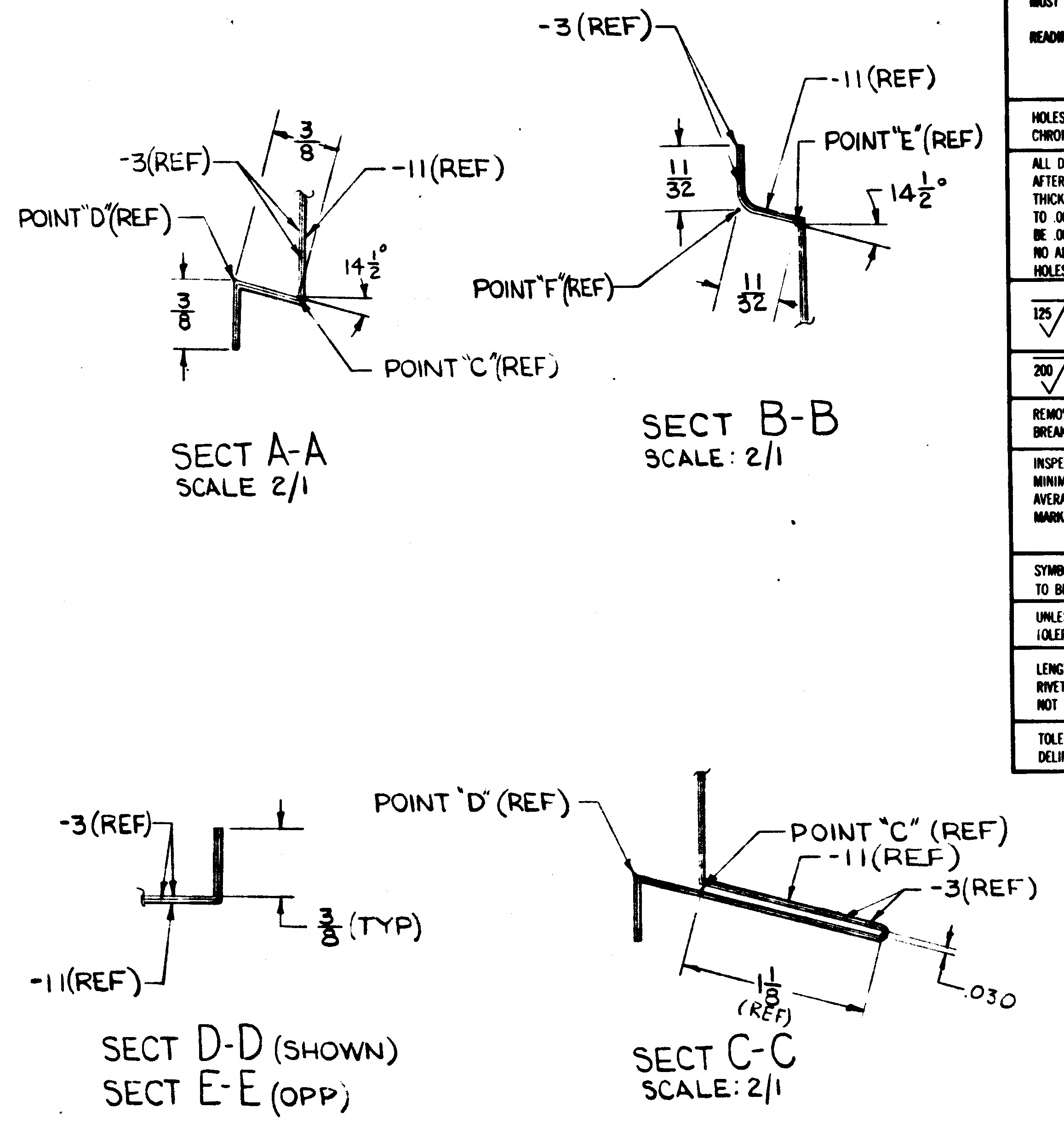

-3(REF)
-11(REF)
-3(REF)
3/8
-11 (REF)
POINT "D"(REF)
14 1/2°
3/8
POINT "C"(REF)
11/32
POINT "E"(REF)
14 1/2°
POINT "F"(REF)
11/32
SECT A-A
SCALE 2/1
SECT B-B
SCALE: 2/1
-3(REF)
3/8 (TYP)
-11(REF)
SECT D-D (SHOWN)
SECT E-E (OPP)
POINT "D" (REF)
POINT "C" (REF)
-11(REF)
-3(REF)
1 1/8 (REF)
.030
SECT C-C
SCALE: 2/1

	GRUMMAN AIRCRAFT ENGRG CORP. BETHPAGE, L. I., NEW YORK		
	SIZE D	CODE IDENT NO. 26512	LDW280-52571
MODEL OR END ITEM	SCALE		SHEET

LDW280-52571

01

NAS 9-1100

P1

ENG 32.1 REV 3-65

GRUMMAN AIRCRAFT ENGINEERING CORP.
CODE IDENT NO. 26512
ENGINEERING ORDER

DWG. NO. LDW280-52571 | EO NO. A1
CONTROL INFO NO. LM-2-3568

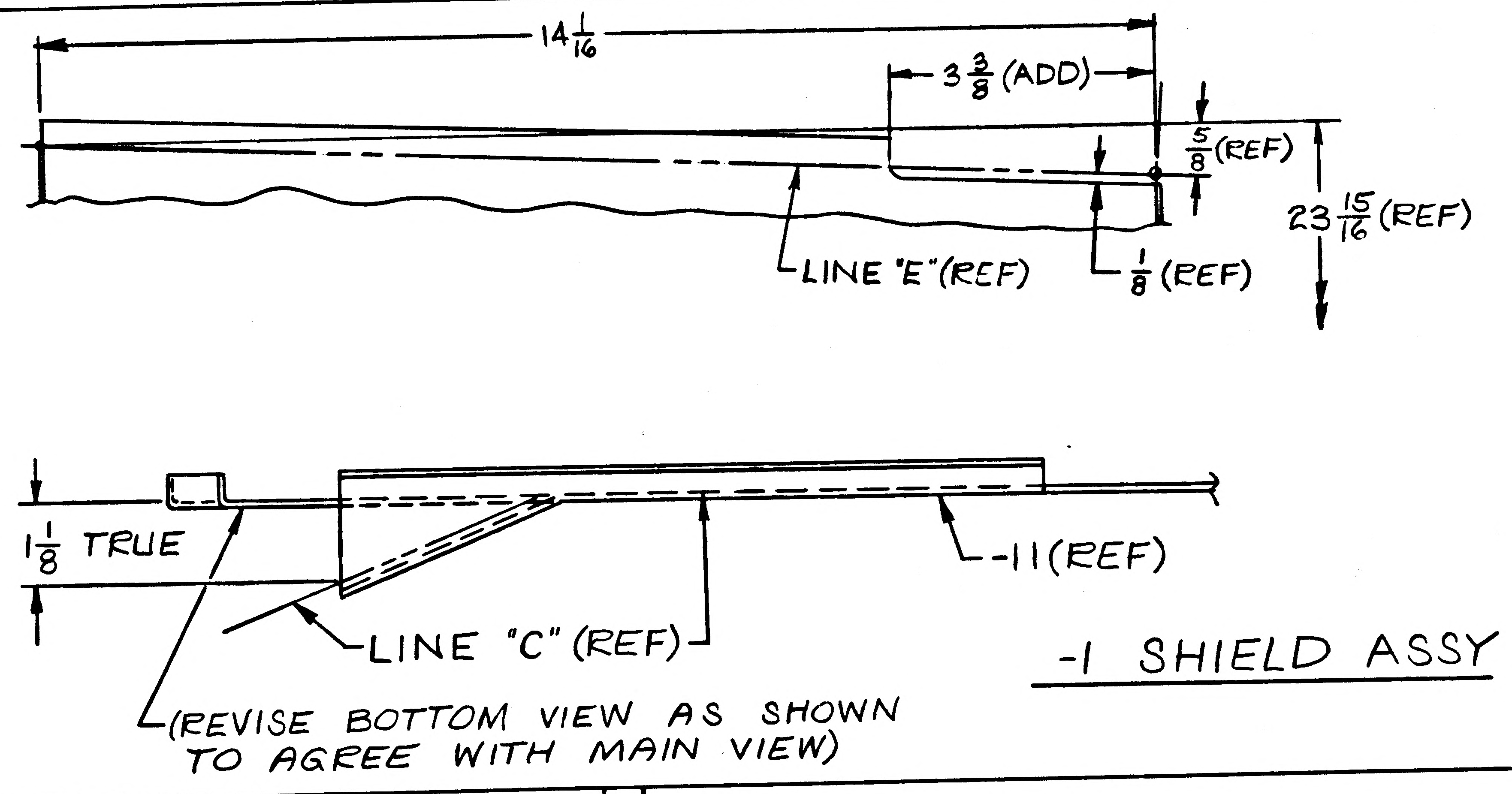

14 1/16
3 3/8 (ADD)
5/8 (REF)
23 15/16 (REF)
LINE "E" (REF)
1/8 (REF)
1 1/8 TRUE
-11 (REF)
LINE "C" (REF)
(REVISE BOTTOM VIEW AS SHOWN TO AGREE WITH MAIN VIEW)
-1 SHIELD ASSY

2

DETAIL SPEC REQ		CL II ENGRG CHG	✓	CL I ENGRG CHG	

REASON FOR EO: (DRAWING CORRECTION ONLY) DIM REQD FOR FABRICATION & BOTTOM VIEW IN ERROR

DESCRIPTION OF EO: FOR -1, IN FLD, ADDED 3 3/8 DIM FOR CUTOUT & REVISED BOTTOM VIEW TO CORRESPOND WITH MAIN VIEW.

GAEC EO RELEASE C
JK
02131

MODEL	PROCURING ACTIVITY NO.	GAEC UNIT NO.	SUB CONTR UNIT NO.
LM		NOT REQD	

DRAWING CHANGE REQD		DISPOSITION OF PARTS									
✓		NOT	REQD	APPROVED BY	JAP					DAM	
				DATE	7/6/67				5/8/67	5/8/67	5-12-67	5/8/67
REVISE DWG	RECORD EO	REWORK	SCRAP	-6-	VDI	SUPPORT	RELIAB. GROUP	GROUP LEADER	STRESS GROUP	LIAISON ENGRG	PROJ ENGRG	CONT

PRIORITY: E
DRAWING TITLE: SHIELD ASSY~DESCENT STAGE LANDING RADAR REFLECTOR-THERMAL
DRAWING NO. LDW280-52571
EO NO. A1

ISSUED BY LIAISON J. MALONEY 5/8/67 X3604 SECTION V.D.I. GROUP NO. 335 PL 25

01 NAS 9-1100

ENG 32.1 REV 3-65

Ⓐ

GRUMMAN AIRCRAFT ENGINEERING CORP.
CODE IDENT NO. 26512
ENGINEERING ORDER *

DWG. NO. LDW280-52571 | EO NO. A2
CONTROL INFO NO. LDW280A7770

ADD LDW280-52571-13 SHIELD ASSY CONSISTING OF (9) -15 FOIL ASSY & (1) -17 FOIL ; -15 FOIL ASSY CONSISTS OF (1) -17 FOIL & A/R OF MESH (NOTES 2 & 3) & A/R GT835P-8 (NOTE 4)
FOR -17 FOIL: FABRICATE PER LPC280-19 (NOTE 2)
MAKE -17 FROM .0005 THICK NICKEL FOIL, INCO 200.

ADD LDW280-52571-19 SHIELD ASSY CONSISTING OF (9) -21 FOIL ASSY & (1) -23 FOIL ; -21 FOIL ASSY CONSISTS OF (1) -23 FOIL & A/R OF MESH (NOTES 2 & 3) & A/R GT835P-8 (NOTE 4)
FABRICATE -23 FOIL PER LPC280-19 (NOTE 2)
MAKE -23 FROM .0005 THICK NICKEL FOIL, INCO 200.

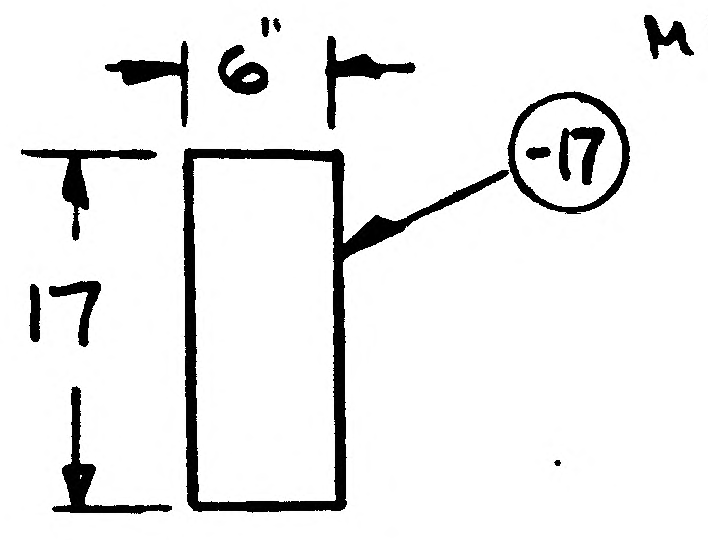

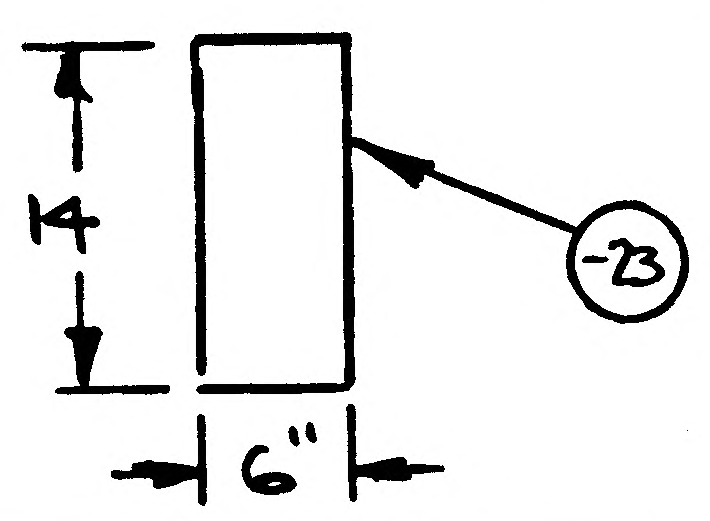

-13 & -19 N/A LDW280-52574
EFF LM-2(32) THRU LM-15(45)

DETAIL SPEC REQ	☐	CL II ENGRG CHG	☑	CL I ENGRG CHG	☐

LCD 1548 ok 3

REASON FOR EO
THERMAL INSULATION ON LWR STRUTS OF LDG RADAR REFLECTOR
LCD 1548

DESCRIPTION OF EO
IN F/D, B/M & MOD/BLK
ADDED -13 & -19 SHLD ASSY, -15 & -21 FOIL ASSY & -17 & -23 FOIL

Ⓡ GAEC EO RELEASE C
JK 7/20/7

MODEL	PROCURING ACTIVITY NO.	GAEC UNIT NO.	SUB CONTR UNIT NO.
LM		LM-2(32) THRU	LM-15(45)

DRAWING CHANGE REQD		DISPOSITION OF PARTS		APPROVED BY						
✓		NOT	REQD	DATE 7/14/67			7/13/67	7/17/67		7/19/67	7-20-67
REVISE DWG	RECORD EO	REWORK	SCRAP	VDI	SUPPORT	RELIAB. GROUP	GROUP LEADER	STRESS GROUP	LIAISON ENGRG	PROJ ENGRG	[redacted]

PRIORITY	DRAWING TITLE	DRAWING NO.	EO NO.
C	D/S SHIELD ASSY LANDING RADAR REFLECTOR THERMAL	LDW280-52571	A2

ISSUED BY G. BARNES/J. STRAKOSCH X1153 SECTION VDI GROUP NO. 335 PL 25

01 NAS 9-1100

ENG 32.1 REV 3-65

GRUMMAN AIRCRAFT ENGINEERING CORP.
CODE IDENT NO. 26512
ENGINEERING ORDER

DWG. NO. LEO 280 | EO NO. 1444
CONTROL INFO NO. LDW280B7453

FOR THE DWGS LISTED BELOW DELETE LM-15(45) EFF FROM ALL DASH NOS. *

DWG NO.	CHANGE NO.	DWG NOMENCLATURE
LDW280-51642	B4	SEE DWG
-51818	B1	↑
-51823	A3	
-52571	A3	
-52574	B3	↓
LDW280 -52627	B4	SEE DWG

* APPLICABLE DASH NOS

DETAIL SPEC REQ ☐ CL II ENGRG CHG ☐ CL I ENGRG CHG ☑ LCD3587 PKG 56 PG 1 CCA 1821 (5)

REASON FOR EO: LM-15(45) NO LONGER REQD

DESCRIPTION OF EO: DELETED LM-15(45) EFF FROM -*

GAEC EO RELEASE: VC 5/1/[illegible]

MODEL	PROCURING ACTIVITY NO.	GAEC UNIT NO.	SUB CONTR UNIT NO.
LM		LM-15(45)	

DRAWING CHANGE REQD: REVISE DWG ✓ RECORD EO ☐
DISPOSITION OF PARTS: REWORK ☐ SCRAP ✓

	VDI	SUPPORT	RELIAB. GROUP	GROUP LEADER	STRESS GROUP	LIAISON ENGRG	PROJ ENGRG	GOVT
APPROVED BY								
DATE	4/1/69			4-2-69	4/8/69		4/9/69	5/7/69

PRIORITY C | DRAWING TITLE SEE DWG | DRAWING NO. LEO 280 | EO NO. 1444

052869 ISSUED BY MEVORAH /THORJUSEN X86046 SECTION VEH DES INT GROUP NO. 335 PL 25

01

NAS 9-1100

ENG 32.1 REV 3-65

GRUMMAN AIRCRAFT ENGINEERING CORP.
CODE IDENT NO. 26512
ENGINEERING ORDER

DWG. NO. LDW280-52571		EO NO. A4
CONTROL INFO NO. LDW280B9462		

ON -1, -13 & -19

IN F/D & NOTES:

REMOVE NOTE 4 CALLOUT

ADD NOTE * (USE NEXT AVAIL NO.)
THIS DWG IS EFF BY THE FOLLOWING LFM 455.
SEE LFM FOR EFF & MODIFICATION

DETAIL SPEC REQ	☐	CL II ENGRG CHG	☐	CL I ENGRG CHG	☑ LCD 5050 PK50

REASON FOR EO: TO REMOVE TAPE FROM RADAR REFLECTOR

DESCRIPTION OF EO: ON -1, -13, & -19 REMOVED NOTE 4 ADDED NOTE *

GAEC EO RELEASE: JK 1/8/70

MODEL	EI ~~PROCURING ACTIVITY NO.~~	EFFECTIVITY GAEC UNIT NO.	SUB CONTR UNIT NO.
LM	LFM 455	LM7(37) LM8(38)	
LM		LM9(39) THRU 14(44)	

DRAWING CHANGE REQD		DISPOSITION OF PARTS	
REVISE DWG	RECORD EO	REWORK	SCRAP
✓		✓	

APPROVED BY	PST	Mu			NM		PST	Bauman
DATE	1-7-70	1/7/70		1/7/70	1-7-70		1-7-70	1/8/70
	VDI	SUPPORT	RELIAB. GROUP	GROUP LEADER	STRESS GROUP	LIAISON ENGRG	PROJ ENGRG	~~GOVT~~

PRIORITY	DRAWING TITLE	DRAWING NO.	EO NO.
C	SHIELD ASSY D/S. LANDING RADAR REFLECT. THER	LDW280-52571	A4

CDR 010870
ISSUED BY DON RAGAS 86046 SECTION VDI GROUP NO. 335 PL 2

01

NAS 9-1100

LDW280-52574 A

MODEL OR END ITEM	NEXT ASSY	MODULE OR SER NO.	REQD PER MODULE OR END ITEM
LM	SEE NOTE 4	QUAL TEST (70)	1

PART NO. LDW280-52574-7

MODEL OR END ITEM	NEXT ASSY	MODULE OR SER NO.	REQD PER MODULE OR END ITEM
LM	LDW280-66661	LM-15(45)	1
		LM-14(44)	1
		LM-13(43)	1
		LM-12(42)	1
		LM-11(41)	1
		LM-10(40)	1
		LM-9(39)	1
		LM-8(38)	1
		LM-7(37)	1
		LM-6(36)	1
	LDW280-66661	NOTE 6	1
	LDW280-25661	LM-4(34)	1
	LDW280-25661	LM-3(33)	1
LM	LDW280-25661	LM-2(32)	1

PART NO. LDW280-52574-1

GAEC SCH NO. 52

WORK PKG FUNCTION NO. 110

5

SH REV STATUS: FOR DESCRIPTION OF REV SEE SUBQ SH

SHEET	1.00	1.10	2.00	3.00	400
REV	A	A	A	A	A
SHEET			2.01		
REV			A		
SHEET					
REV					

LAST SECT LTR USED J

LAST DASH NO. USED -11

GRUMMAN REL^C INFO A

PRIM NO. JK(001) 207 ME-KA 1/13/9

UNLESS OTHERWISE SPECIFIED DIMENSIONS ARE IN INCHES.
TOLERANCE UNLESS SPECIFIED
FRACTIONS - DECIMALS - ANGLES
± 1/32 ±.020 ± 1/2°

ORIG DWG AUTH

DETAIL SPEC REQUIREMENT

CLASS II ENGRG CHANGE

CLASS I ENGRG CHANGE ✓

CONTRACT NO. NAS9-1100

LINE ITEM

DOCUMENTATION TYPE II

DRAWN BY	J.GRIECO 3/20/67	RELIABILITY	
LAYOUT BY	B. CLARK		
CHECKED BY	D.FASS 3-23-67		
GR LEADER	3/23/67		
VEH DES INT	D. Pusateri 3/23/67		
STRUCTURES	3/24/67	PROJ ENGR	J.O. McClendon 3/27/67
STRUCTURES	3/24	REL GROUP	3/27/67
WEIGHTS			

GRUMMAN AIRCRAFT ENGRG CORP
BETHPAGE, L. I., NEW YORK

SHIELD INSTALLATION
DESCENT STAGE-LANDING RADAR
REFLECTOR

SIZE B | CODE IDENT NO. 26512 | LDW280-52574 | A

SCALE NONE | SHEET 1.00 OF 6

ENG 77.1 12-65

CDR 3-20-67

01

NAS 9-1100

REVISIONS FOR CONTINUATION OF REVISIONS SEE SHEET ______

CHANGE LTR	ITEM NO.	SHEET NO.	ZONE	GRUMMAN INFO ONLY	DET SPEC	CLASS I	CLASS II	ENGRG ORDER	DESCRIPTION	EFFECTIVITY	DISPOSITION OF EXISTING PARTS REWORK	DISPOSITION OF EXISTING PARTS SCRAP	CHANGED BY AND DATE	ENGRG APPD	GOVT APPD
A	1	1.00, 1.10, 2.00, 2.01, 3.00, 4.00	5A 8C 15A 17B 17D			✓		EOA1 LCD 809	ADDED LDW280-52571-1 CREATING -5. REMOVED -3 (1), LDW280-18271-11, -12, -13 & -14 (1 EA), LDW280-18272-11 & -12 (1 EA) & LDW280-18273-19 (1) FROM -1 & ADDED THEM TO -5. IN M/B FOR -1 ADDED QUAL TEST EFF. ADDED NOTES 3 & 4 & SECT. E-E (ADDED SH 1.10 & 2.01).	LM-2 THRU LM-15 QUAL TEST	✓		LEVINE 12-18-68		
	2	2.00, 3.00, 4.00	16C 17B				✓	EOA2	IN FLD & B/M ON -3 : LDW280-18271-23 WAS -19, LDW280-18271-21 WAS -15.	LM-2 THRU LM-15					
	3	2.01, 4.00	17B				✓	EOA3	REF EOA1 : FOR -5 : ADDED MS20615-2M3 (24) REF EOA2 : ADDED QUAL TEST (70) EFF.	LM-2 THRU LM-15 QUAL TEST					
	4	1.00, 2.00, 2.01, 3.00	5A			✓		EOA4 LCD 809	REF EOA1 : IN NOTE 3 ADDED "FINISH -3 WITH SPEREX VHT WHITE PAINT". FOR -1 REMOVED QUAL TEST (70) EFF. ADDED -7, -9 & -11.			-1			
	5	2.01, 4.00	17A, B, C				✓	EOA5	FOR -5, IN FLD & B/M : ADDED NAS697C04L (12) & MS20427M3 (24). DELETED NAS697C04 (12) & MS20615-2M3 (24). IN FLD REVISED LOCATING DIMENSIONS.		✓				
	6	2.00, 2.01, 3.00, 4.00	2C 1B 9B 10A 13D 15B,C				✓	EOA6 LCD 1548	IN B/M & FLD ON -5 : ADDED LDW280-18326-11 & -13, LDW280-52571-13 & -19 (1 EA). ADDED DR #33, GB511J-04-2 (15), AN960C4L (30), MS21043-04 (15), MS20615-2M3 (13), NOTE 5 & SECT F-F, G-G, H-H & J-J.	LM-2 THRU LM-15					
	7	2.01, 3.00	8B				✓	EOA7	ON -1 FLD & B/M : REMOVED GB511J-06-2 (2) & MS21043-06 (2) ADDED GB511J-04-2 (2) & MS21043-04 (2).	LM-2 THRU LM-15, QUAL TEST					
	8	1.00, 3.00		LFM 200			✓	LEO280-1099 LCD 2965	FOR -1 REVISED N/A (WAS) LDW280-25661 (NOW) LDW280-66661 EFF LM-6 (36) THRU LM-15 (45). ADDED NOTE 6 "THIS PART MAY BE AFFECTED BY LFM 200 LM-5 (35).	LM-6 THRU LM-15, LM-5	NOT	REQD	H.D. ES		
	9	1.00				✓		LEO280-1182 LCD 2965, CCA1235	FOR -1 REVISED N/A TO LDW280-66661, (WAS) LDW280-25661.	LM-5 (35)	NOT	REQD	E.G.R. 12-18-68 ES		
	10						✓		REF. EOA5: IN DESCRIPTION OF EO FOR -5 SHOULD BE FOR -5 & -9.	LM-2 THRU LM-5 QUAL TEST	✓		H.D. 12-18-68		
	11						✓	②	REF. EOA7: EFF. LM-2 THRU LM-15 & QUAL TEST SHOULD BE LM-2 THRU LM-15.	LM-2 THRU LM-15	✓				

CHG APPROVED

LTR	GROUP LDR	VEH DES INT	STRUCT	STRUCT	WEIGHTS	RELIABILITY
A						

GRUMMAN AIRCRAFT ENGRG CORP., BETHPAGE, L. I., NEW YORK

SIZE	CODE IDENT NO.		
B	26512	LDW280-52574	A

SCALE NONE SHEET 1.10

ENG 77.16 3-66

01

NAS 9-1100

	-11	-9	-7	-5	-3	-1	CODE IDENT	PART NO.	I&T	NOMENCLATURE OR DESCRIPTION	MATERIAL	GOVT SPEC	COML SPEC	STOCK SIZE	PROCESS SYM	FINISH NO.	ZONE
	QTY PER ASSEMBLY																
		1		1				LDW280-18273-19	E	ANGLE	SEE DWG						17D
	1				1			-17									17B
	1				1			-15									16B
	2				2			-13		ANGLE							16C 16B
	1				1			LDW280-18273-11		WEB							16C
		1		1				LDW280-18272-12		ANGLE							17C
		1		1				LDW280-18272-11		ANGLE							17B
	1				1			LDW280-18271-23		ANGLE							17B
	1				1			-21									16C
	1				1			-17									18E
		1		1				-14									8B
		1		1				-13									8E
		1		1				-12									10C
		1		1				LDW280-18271-11		ANGLE	SEE DWG						10C
		1						LDW280-52574-11		SHIELD ASSY (WELDED)					TSW	NONE	5A
			1					-9		SHIELD ASSY					NONE	NONE	5A
								-7		SHIELD INSTL					NONE	NONE	5A
						1		-5		SHIELD ASSY					NONE	NONE	5A
				1				-3		SHIELD ASSY (WELDED)					TSW	NOTE 3	5A
								LDW280-52574-1	E	SHIELD INSTL					NONE	NONE	5A

SYM OR NO.	PROCESS OR FINISH	GRUMMAN SPEC OR MILITARY SPEC	SYM OR NO.	PROCESS OR FINISH	GRUMMAN SPEC OR MILITARY SPEC	SYM OR NO.	PROCESS OR FINISH	GRUMMAN SPEC OR MILITARY SPEC
						TSW	SPOTWELD TI	MIL-W-6858 CLASS "A"

I&T: IDENTIFICATION AND TRACEABILITY IN ACCORDANCE WITH : NONE

GRUMMAN AIRCRAFT ENGRG CORP, BETHPAGE, L. I., NEW YORK

SIZE	CODE IDENT NO.		
B	26512	LDW280-52574	A

SCALE NONE

SHEET 2.00

ENG 77.2 7-65

01

NAS 9-1100

	-11	-9	-7	-5	-3	-1	CODE IDENT	PART NO.	I&T	NOMENCLATURE OR DESCRIPTION	MATERIAL	GOVT SPEC	COML SPEC	STOCK SIZE	PROCESS SYM	FINISH NO.	ZONE
			9			7		MS21043-06	E	NUT	STD PART						
		6	2	21		4		MS21043-04		NUT							
		16		16				MS20615-3M3		RIVET							
				13				MS20615-2M3		RIVET							
		24		24				MS20427M3		RIVET							
				30				AN960C4L		WASHER							
		12		12				AN960C4		WASHER							
		12		12				NAS697C04L		PLATENUT	STD PART						
			9			7		GB511J-06-2		BOLT	GRUMMAN STD						
				15		2		GB511J-04-2		BOLT	GRUMMAN STD						
		18	2	18		2		GB511J-04-1		BOLT	GRUMMAN STD						
				1				LDW280-18326-13		PLATE	SEE DWG						9C
				1				LDW280-18326-11		PLATE							2C
				1				LDW280-52571-19		SHIELD							9C
				1				LDW280-52571-13		SHIELD							2C
		1		1				LDW280-52571-1	E	SHIELD	SEE DWG						18B

QTY PER ASSEMBLY

SYM OR NO.	PROCESS OR FINISH	GRUMMAN SPEC OR MILITARY SPEC	SYM OR NO.	PROCESS OR FINISH	GRUMMAN SPEC OR MILITARY SPEC	SYM OR NO.	PROCESS OR FINISH	GRUMMAN SPEC OR MILITARY SPEC

I & T: IDENTIFICATION AND TRACEABILITY IN ACCORDANCE WITH : NONE

GRUMMAN AIRCRAFT ENGRG CORP, BETHPAGE, L. I., NEW YORK

SIZE	CODE IDENT NO.		
B	26512	LDW280-52574	A

Ⓐ

SCALE NON

SHEET 2.01

ENG 77.2 7-65

01

NAS 9-1100

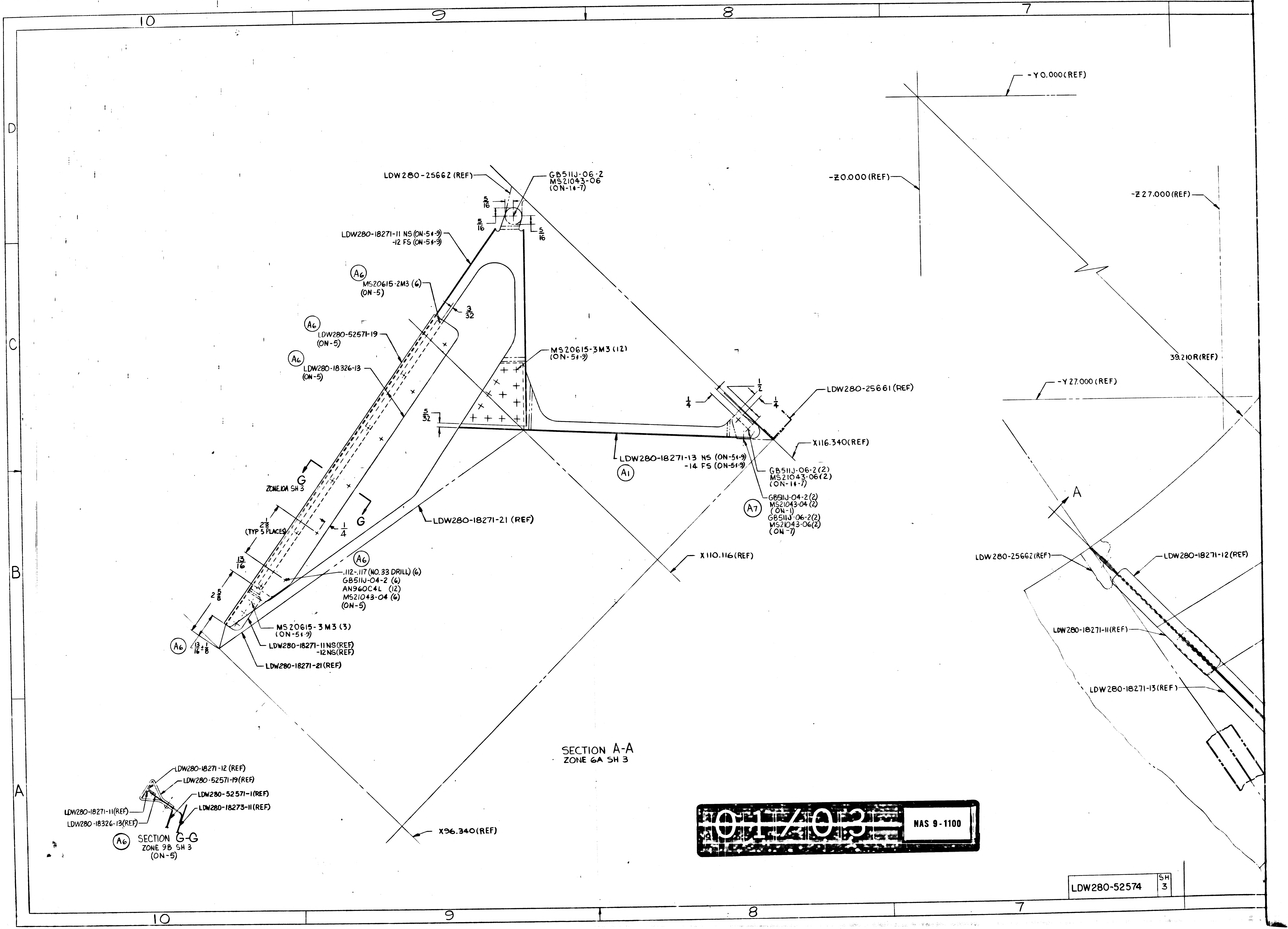
10
9
8
7
D
C
B
A
-Y 0.000 (REF)
-Z 0.000 (REF)
-Z 27.000 (REF)
39.210 R (REF)
-Y 27.000 (REF)
LDW280-25662 (REF)
GB511J-06-2
MS21043-06
(ON-1&-7)
5/16
5/16
5/16
LDW280-18271-11 NS (ON-5&-9)
-12 FS (ON-5&-9)
A6
MS20615-2M3 (6)
(ON-5)
3/32
A6
LDW280-52571-19
(ON-5)
A6
LDW280-18326-13
(ON-5)
MS20615-3M3 (12)
(ON-5&-9)
1/2
1/4
1/4
LDW280-25661 (REF)
5/32
X116.340 (REF)
LDW280-18271-13 NS (ON-5&-9)
-14 FS (ON-5&-9)
A1
GB511J-06-2 (2)
MS21043-06 (2)
(ON-1&-7)
A7
GB511J-04-2 (2)
MS21043-04 (2)
(ON-1)
GB511J-06-2 (2)
MS21043-06 (2)
(ON-7)
G
ZONE 10A SH 3
G
2 1/8
(TYP 5 PLACES)
1/4
LDW280-18271-21 (REF)
13/16
A6
.112-.117 (NO. 33 DRILL) (6)
GB511J-04-2 (6)
AN960C4L (12)
MS21043-04 (6)
(ON-5)
X110.116 (REF)
2 5/8
MS20615-3M3 (3)
(ON-5&-9)
LDW280-18271-11 NS (REF)
-12 NS (REF)
A6
13/16 ± 1/8
LDW280-18271-21 (REF)
A
LDW280-25662 (REF)
LDW280-18271-12 (REF)
LDW280-18271-11 (REF)
LDW280-18271-13 (REF)
X96.340 (REF)
LDW280-18271-12 (REF)
LDW280-52571-19 (REF)
LDW280-52571-1 (REF)
LDW280-18271-11 (REF)
LDW280-18273-11 (REF)
LDW280-18326-13 (REF)
A6

SECTION A-A
ZONE 6A SH 3

SECTION G-G
ZONE 9B SH 3
(ON-5)

01/03

NAS 9-1100

LDW280-52574	SH 3

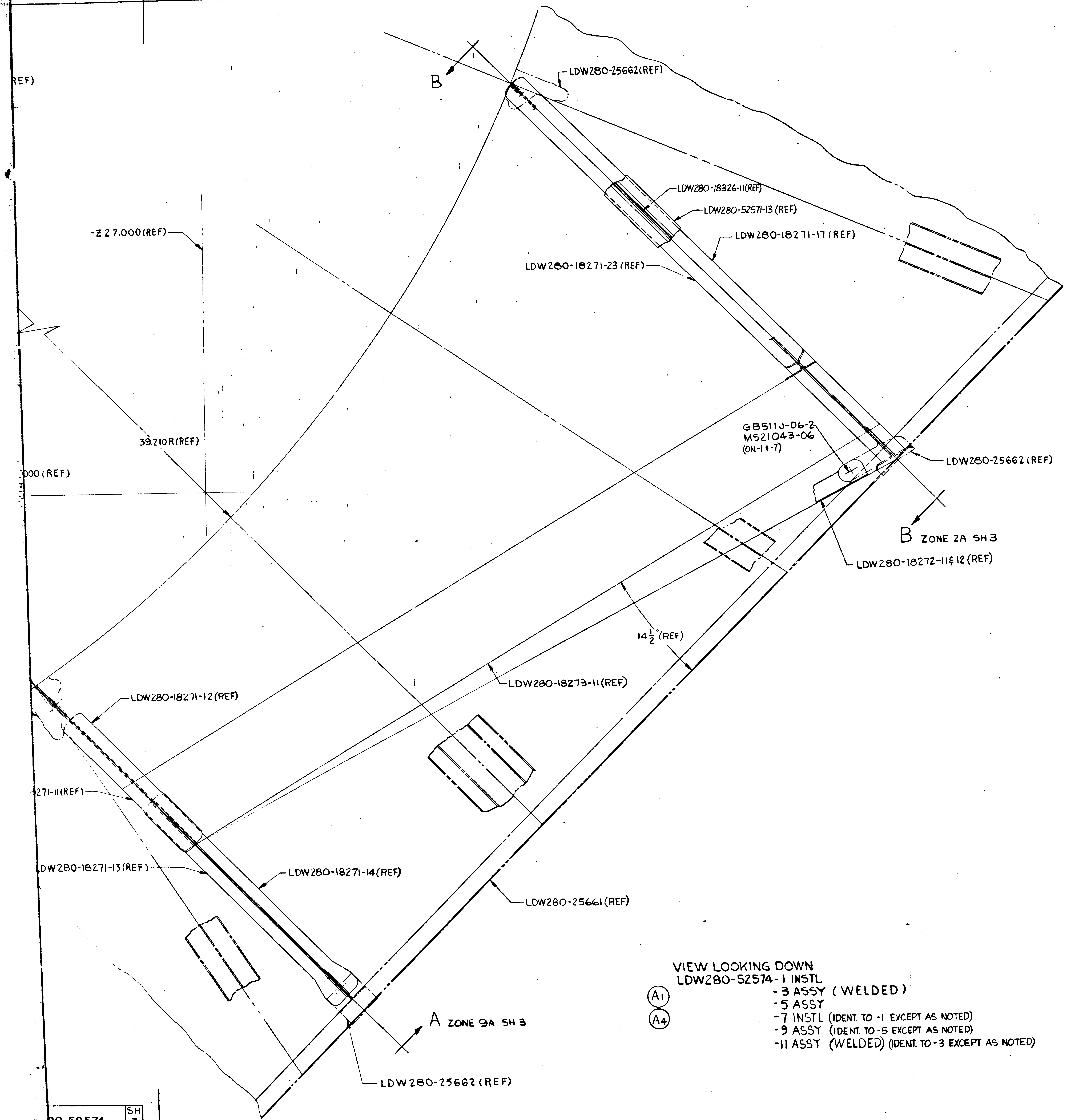
B
LDW280-25662(REF)
LDW280-18326-11(REF)
LDW280-52571-13 (REF)
LDW280-18271-17 (REF)
LDW280-18271-23 (REF)
-Z 27.000 (REF)
REF)
39.210R(REF)
000 (REF)
GB511J-06-2
MS21043-06
(ON-14-7)
LDW280-25662 (REF)
B ZONE 2A SH 3
LDW280-18272-11& 12 (REF)
14 1/2" (REF)
LDW280-18273-11(REF)
LDW280-18271-12(REF)
271-11(REF)
LDW280-18271-13(REF)
LDW280-18271-14(REF)
LDW280-25661(REF)
A ZONE 9A SH 3
LDW280-25662 (REF)

VIEW LOOKING DOWN
LDW280-52574-1 INSTL
Ⓐ1 -3 ASSY (WELDED)
-5 ASSY
Ⓐ4 -7 INSTL (IDENT. TO -1 EXCEPT AS NOTED)
-9 ASSY (IDENT. TO -5 EXCEPT AS NOTED)
-11 ASSY (WELDED) (IDENT. TO -3 EXCEPT AS NOTED)

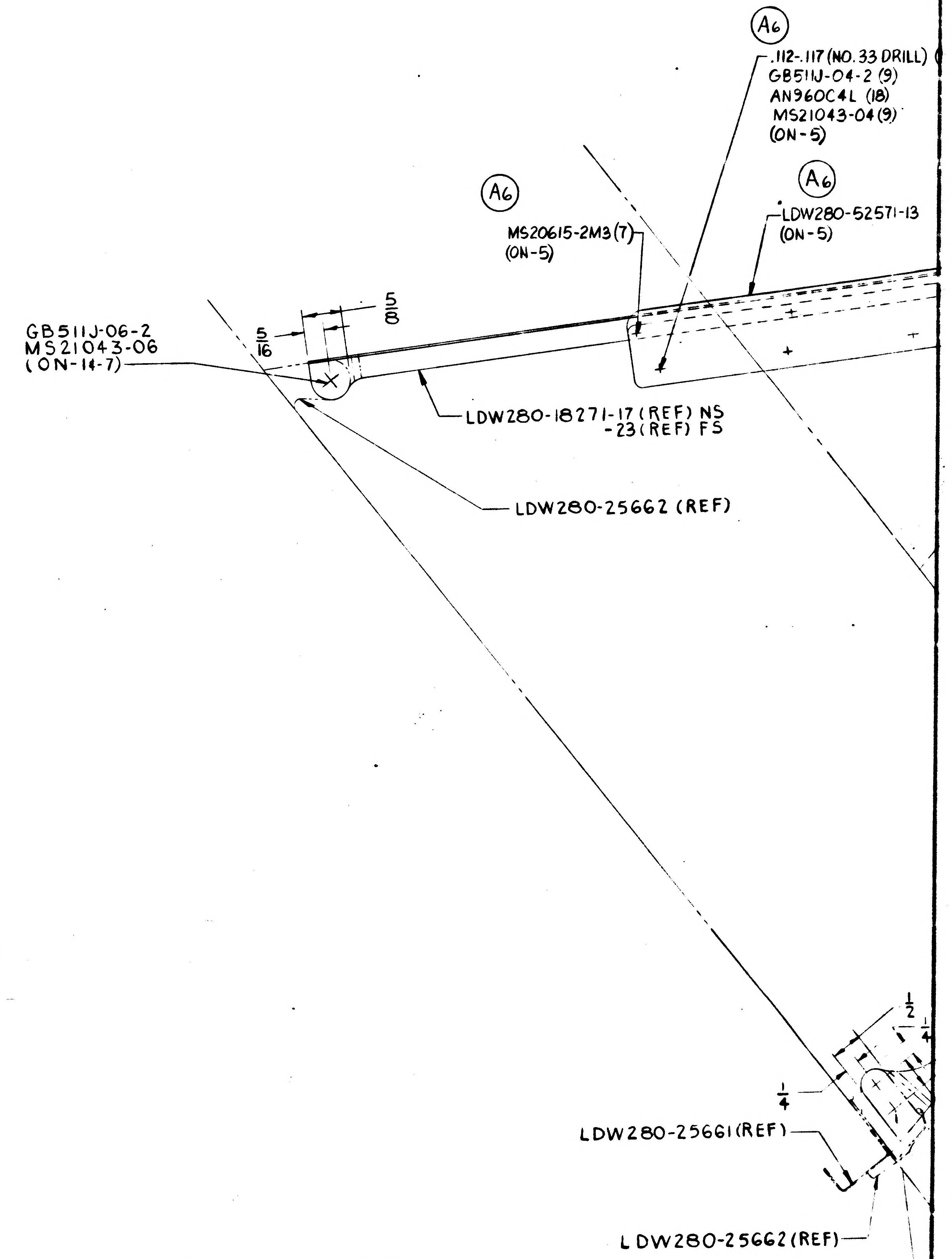
ZONE 13A SH
Ⓐ6
.112-.117 (NO. 33 DRILL)
GB511J-04-2 (9)
AN960C4L (18)
MS21043-04(9)
(ON-5)
Ⓐ6
MS20615-2M3(7)
(ON-5)
Ⓐ6
LDW280-52571-13
(ON-5)
5/8
5/16
GB511J-06-2
MS21043-06
(ON-14-7)
LDW280-18271-17 (REF) NS
-23 (REF) FS
LDW280-25662 (REF)
1/2
1/4
1/4
LDW280-25661(REF)
LDW280-25662(REF)

02703 NAS 9-1100

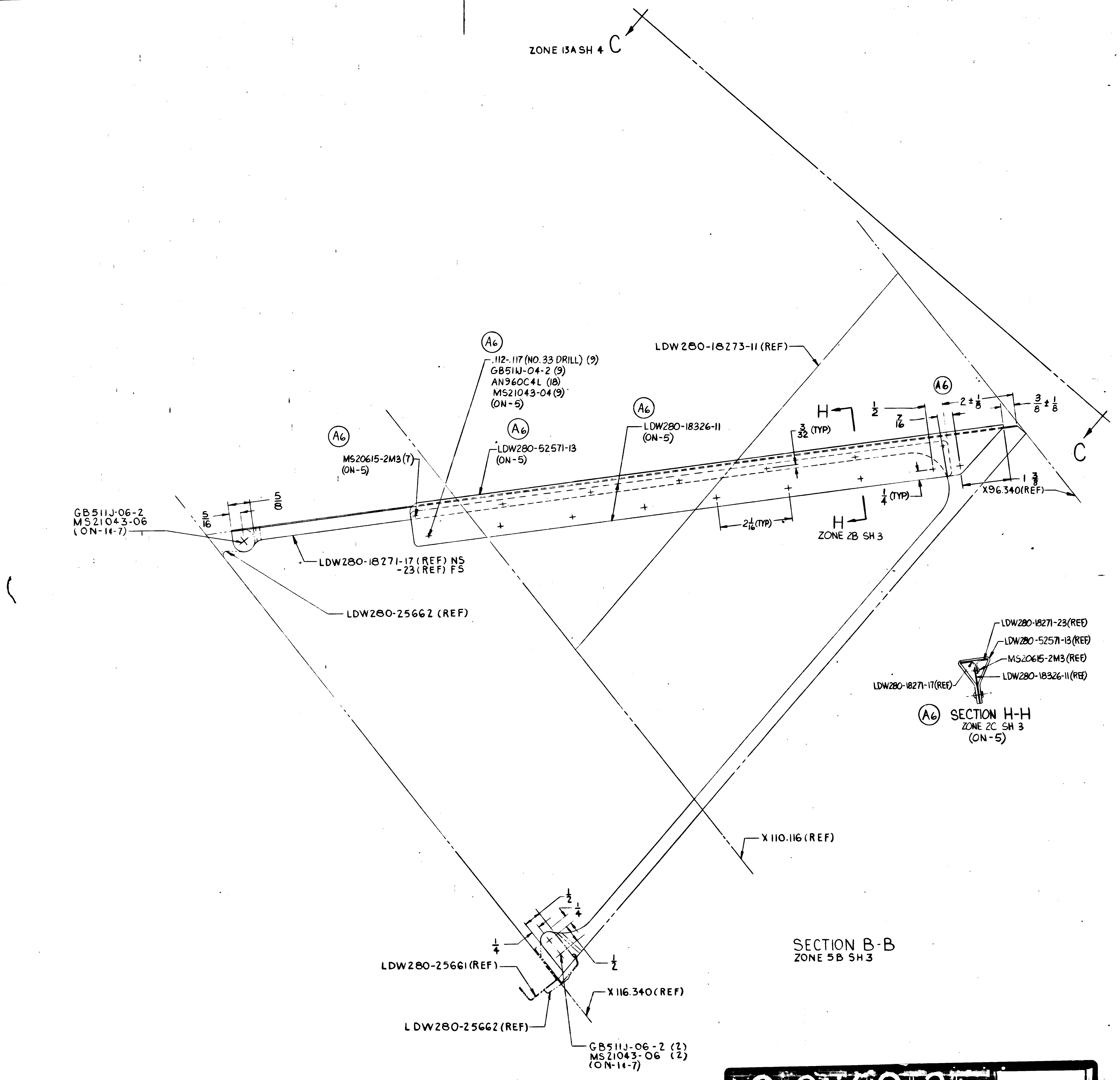
ZONE 13A SH 4 C
C
LDW280-18273-11 (REF)
A6
.112-.117 (NO. 33 DRILL) (9)
GB51W-04-2 (9)
AN960C4L (18)
MS21043-04 (9)
(ON-5)
A6
LDW280-18326-11
(ON-5)
A6
LDW280-52571-13
(ON-5)
A6
MS20615-2M3 (7)
(ON-5)
A6
H
$\frac{1}{2}$
$\frac{7}{16}$
$\frac{3}{32}$ (TYP)
2 ± $\frac{1}{8}$
$\frac{3}{8}$ ± $\frac{1}{8}$
1 $\frac{3}{8}$
X96.340 (REF)
$\frac{1}{4}$ (TYP)
$2\frac{1}{16}$ (TYP)
H
ZONE 2B SH 3
GB511J-06-2
MS21043-06
(ON-14-7)
$\frac{5}{16}$
$\frac{5}{8}$
LDW280-18271-17 (REF) NS
-23 (REF) FS
LDW280-25662 (REF)
LDW280-18271-23 (REF)
LDW280-52571-13 (REF)
MS20615-2M3 (REF)
LDW280-18326-11 (REF)
LDW280-18271-17 (REF)
X 110.116 (REF)
$\frac{1}{2}$
$\frac{1}{4}$
$\frac{1}{4}$
$\frac{1}{2}$
LDW280-25661 (REF)
X 116.340 (REF)
LDW280-25662 (REF)
GB511J-06-2 (2)
MS21043-06 (2)
(ON-14-7)

A6 SECTION H-H
ZONE 2C SH 3
(ON-5)

SECTION B-B
ZONE 5B SH 3

03/03 NAS 9-1100

NOTES:
1. NO TOOLING HOLES PERMITTED IN PARTS
2. INSTALL FASTENERS PER LSP-14-15302 & LSP-14-15306
3. FINISH -3 WITH SPEREX VHT WHITE PAINT PER LPC 280-32.
4. -7 TO BE USED IN CONJUNCTION WITH RYAN AERONAUTICAL CO. TEST #53695-88.
5. TRIM EXCESS MATERIAL OFF LDW280-52571 -13 & -19 TO MAINTAIN SHAPE AS SHOWN IN SECTIONS F-F & G-G.
6. THIS PART MAY BE AFFECTED BY LFM 200 LM-5(35).

MANUFACTURING OPERATIONS UNLESS OTHERWISE SPECIFIED NOTES CHECKED √ APPLY TO THIS DWG.	
RUBBER STAMP PART NUMBER AND ALL OTHER MARKINGS IN REGION MARKED ⊠ USE BOTH SIDES IF NECESSARY.	√
FILLET AND INSIDE CORNER RADII TOLERANCES .016R TO .062R ± .010 .063R TO .250R ± .015 OVER .250R ± .030	
DEPTH SHOWN FOR TAPPED HOLES IS FULL THDS. 2-3 IMP THDS. BEYOND PERMISSIBLE.	
EXTERNAL THREAD LENGTH SHOWN INCLUDES 2 IMPERFECT THREADS MAX.	
DO NOT CADMIUM PLATE & PAINT HOLES OR SURFACES MARKED WITH DOUBLE ASTERISK.	
MISMATCH STEP OF ± .005 PERMISSIBLE DUE TO CHANGE OF CUTTERS AT INSIDE INTERSECTING SURFACES.	
DIAMETERS MARKED MUST BE CONCENTRIC WITHIN FULL INDICATOR READING	
HOLES MUST BE KEPT FREE OF CHROME PLATING SOLUTION.	
ALL DIMENSIONS SHOWN TO BE MET AFTER CADMIUM PLATING. THICKNESS OF PLATE .0003 MIN. TO .0005 MAX. MIN. THICKNESS TO BE .0002 ON THREADED AREAS. NO ALLOWANCE FOR PLATING IN HOLES	
125 √ SURFACE ROUGHNESS INCLUDING REAMED HOLES PER MIL-STD-10	
200 √ FOR ALL DRILLED HOLES	
REMOVE ALL BURRS. BREAK ALL EDGES .015-.031	
INSPECTION INFORMATION MINIMUM PERMISSIBLE ~~AVERAGE~~ EDGE DISTANCE ~~MARKED~~ IS 1½ FASTENER DIA FROM FASTENER ℄	√
SYMBOL √ DENOTES SURFACE TO BE MACHINED	
UNLESS OTHERWISE SPECIFIED TOLERANCE ON FLANGES IS ± 1/32	
LENGTHS OF AN, NAS & MS AL ALY RIVETS SHORTER THAN 1 INCH ARE NOT SPECIFIED.	
TOLERANCE ON LOFTED DELINEATIONS IS ± 1/32	√

DWG SIZE 34 X 118

30 SQ. FT.
7.5 SQ. FT.
PRINTING INFO ONLY
FULL SIZE SHEET AREA (36 X 120)=
1/2 SIZE SHEET AREA (1/4 OF FULL)=
PRINT TRIM LINE

D
C
A LDW280-52574 B
A LDW280-52574 A

GRUMMAN AIRCRAFT ENGRG CORP., BETHPAGE, L. I., NEW YORK

LM	SIZE J	CODE IDENT NO. 26512	LDW280-52574	A
MODEL OR END ITEM	SCALE FULL		SHEET 3.00	

(2)

NOT FOR PHOTO REPRODUCTION 3 FR.

3 FRAMES

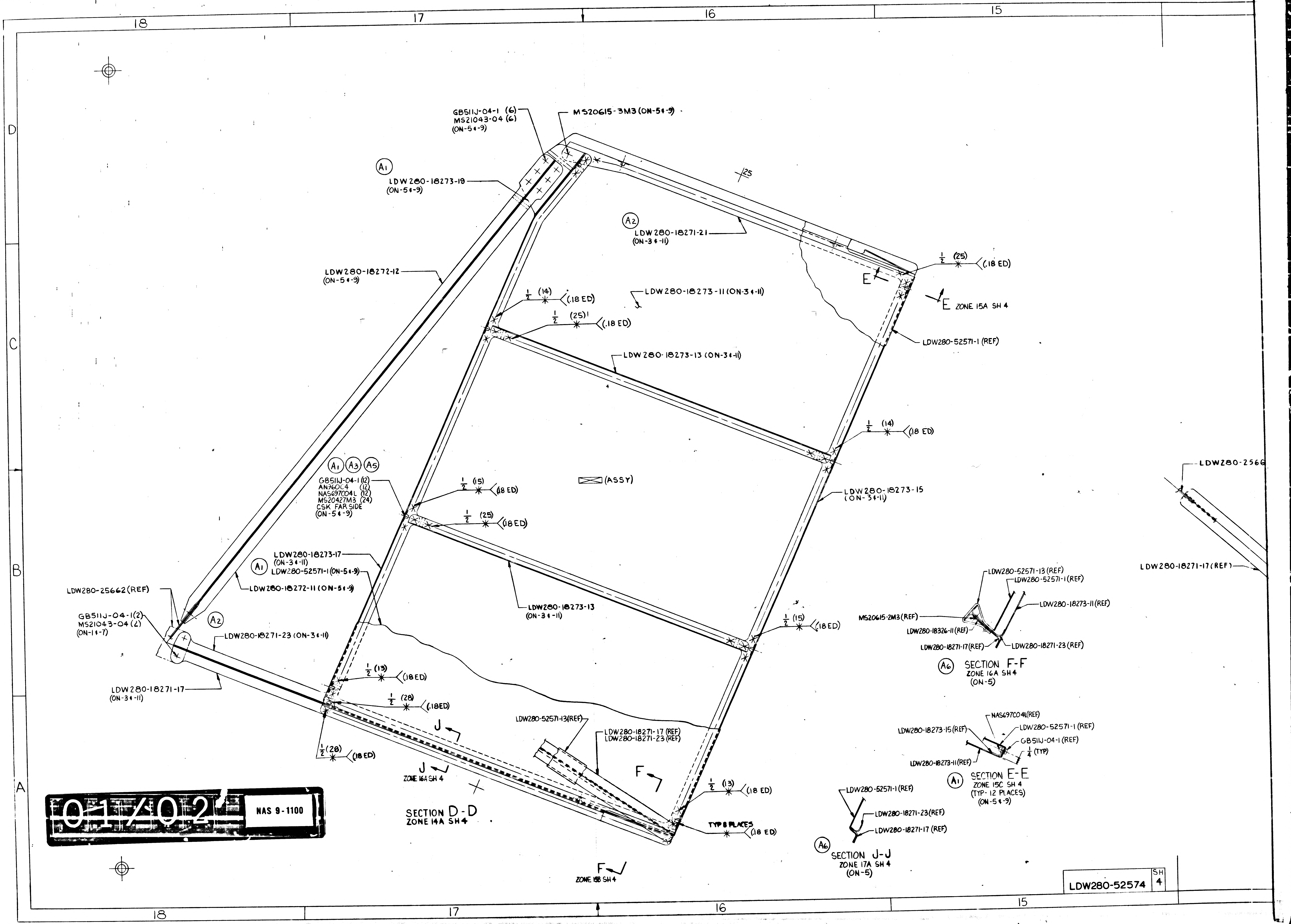
18
17
16
15
D
C
B
A
GB511J-04-1 (6)
MS21043-04 (6)
(ON-5 ¢-9)
MS20615-3M3 (ON-5¢-9)
A1
LDW280-18273-19
(ON-5¢-9)
25
A2
LDW280-18271-21
(ON-3¢-11)
1/2 (25) (.18 ED)
E
E ZONE 15A SH 4
LDW280-18272-12
(ON-5¢-9)
1/2 (14) (.18 ED)
LDW280-18273-11 (ON-3¢-11)
1/2 (25) (.18 ED)
LDW280-52571-1 (REF)
LDW280-18273-13 (ON-3¢-11)
1/2 (14) (.18 ED)
A1 A3 A5
GB511J-04-1 (12)
AN360C4 (12)
NAS697C04L (12)
MS20427M3 (24)
CSK FAR SIDE
(ON-5¢-9)
1/2 (15) (.18 ED)
(ASSY)
LDW280-18273-15
(ON-3¢-11)
1/2 (25) (.18 ED)
LDW280-18273-17
(ON-3¢-11)
A1
LDW280-52571-1 (ON-5¢-9)
LDW280-25662 (REF)
LDW280-18272-11 (ON-5¢-9)
LDW280-18273-13
(ON-3¢-11)
GB511J-04-1 (2)
MS21043-04 (2)
(ON-1¢-7)
A2
LDW280-18271-23 (ON-3¢-11)
1/2 (15) (.18 ED)
LDW280-18271-17
(ON-3¢-11)
1/2 (13) (.18 ED)
1/2 (28) (.18 ED)
J
J
1/2 (28) (.18 ED)
ZONE 16A SH 4
LDW280-52571-13 (REF)
LDW280-18271-17 (REF)
LDW280-18271-23 (REF)
F
1/2 (13) (.18 ED)
TYP 8 PLACES (.18 ED)
SECTION D-D
ZONE 14A SH 4
F
ZONE 15B SH 4
LDW280-2566
LDW280-18271-17 (REF)
LDW280-52571-13 (REF)
LDW280-52571-1 (REF)
LDW280-18273-11 (REF)
MS20615-2M3 (REF)
LDW280-18326-11 (REF)
LDW280-18271-17 (REF)
LDW280-18271-23 (REF)
A6 SECTION F-F
ZONE 16A SH 4
(ON-5)
NAS697C04L (REF)
LDW280-18273-15 (REF)
LDW280-52571-1 (REF)
GB511J-04-1 (REF)
1/4 (TYP)
LDW280-18273-11 (REF)
A1 SECTION E-E
ZONE 15C SH 4
(TYP-12 PLACES)
(ON-5¢-9)
LDW280-52571-1 (REF)
LDW280-18271-23 (REF)
LDW280-18271-17 (REF)
A6 SECTION J-J
ZONE 17A SH 4
(ON-5)
LDW280-52574
SH 4

01/02

NAS 9-1100

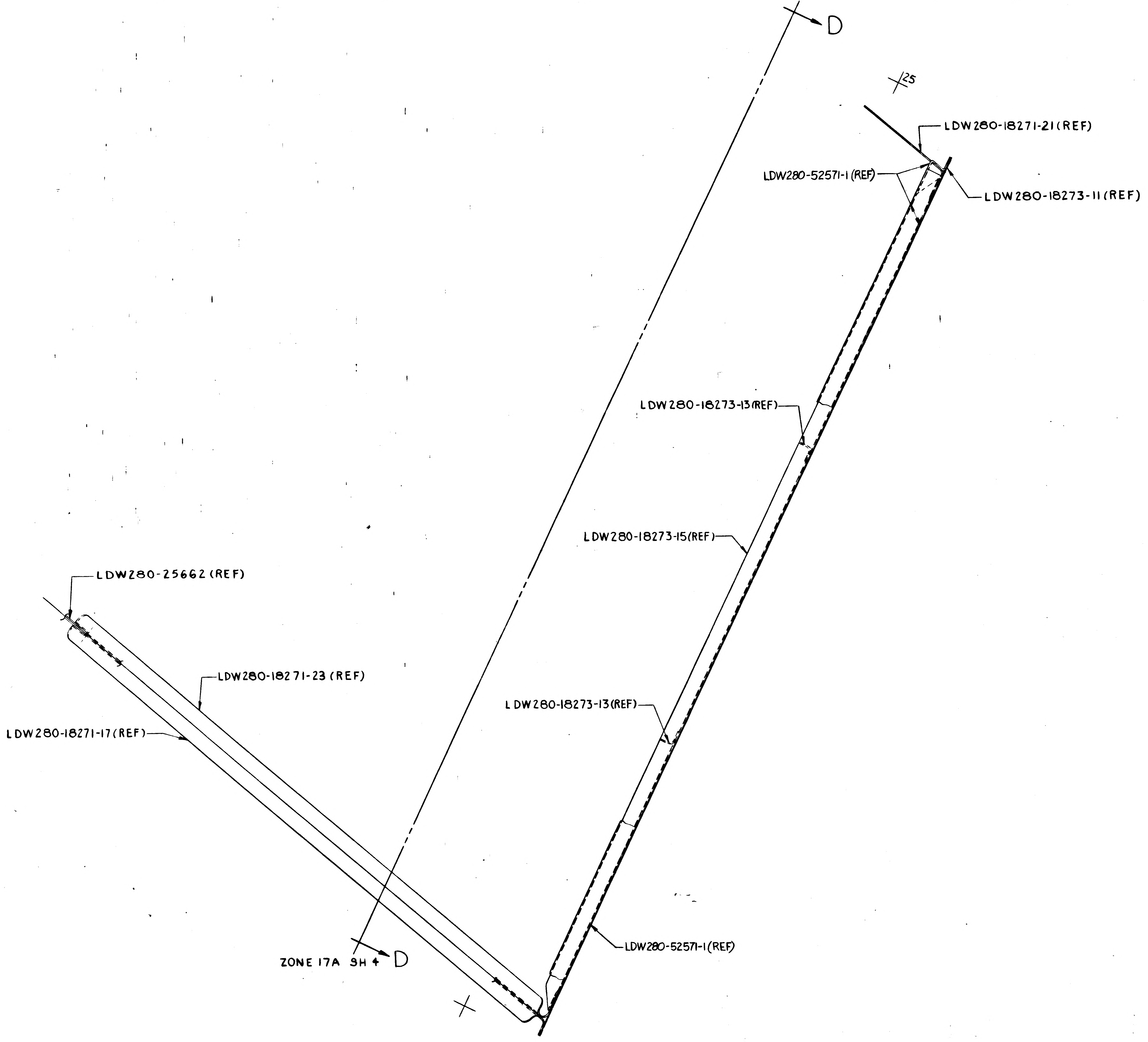
D
25
LDW280-18271-21 (REF)
LDW280-52571-1 (REF)
LDW280-18273-11 (REF)
LDW280-18273-13 (REF)
LDW280-18273-15 (REF)
LDW280-25662 (REF)
LDW280-18271-23 (REF)
LDW280-18271-17 (REF)
LDW280-18273-13 (REF)
LDW280-52571-1 (REF)
ZONE 17A SH 4
D

VIEW C-C
ZONE 2D SH 3

(REF)

MANUFACTURING OPERATIONS
UNLESS OTHERWISE SPECIFIED
NOTES CHECKED √ APPLY TO THIS DWG.

PART NUMBER
AND ALL OTHER MARKINGS
IN REGION MARKED ⊠
USE BOTH SIDES IF NECESSARY.

FILLET AND INSIDE CORNER
RADII TOLERANCES
.016R TO .062R ± .010
.063R TO .250R ± .015
OVER .250R ± .030

DEPTH SHOWN FOR TAPPED
HOLES IS FULL THDS. 2-3 IMP THDS.
BEYOND PERMISSIBLE.

EXTERNAL THREAD LENGTH
SHOWN INCLUDES
2 IMPERFECT THREADS MAX.

DO NOT CADMIUM PLATE & PAINT
HOLES OR SURFACES MARKED
WITH DOUBLE ASTERISK.

MISMATCH STEP OF ± .005
PERMISSIBLE DUE TO CHANGE
OF CUTTERS AT INSIDE
INTERSECTING SURFACES.

DIAMETERS MARKED
MUST BE CONCENTRIC WITHIN
FULL INDICATOR
READING

HOLES MUST BE KEPT FREE OF
CHROME PLATING SOLUTION.

ALL DIMENSIONS SHOWN TO BE MET
AFTER CADMIUM PLATING.
THICKNESS OF PLATE .0003 MIN.
TO .0005 MAX. MIN. THICKNESS TO
BE .0002 ON THREADED AREAS.
NO ALLOWANCE FOR PLATING IN
HOLES

125 √ SURFACE ROUGHNESS
INCLUDING REAMED HOLES
PER MIL-STD-10

200 √ FOR ALL DRILLED HOLES

REMOVE ALL BURRS.
BREAK ALL EDGES .015-.031

INSPECTION INFORMATION
MINIMUM PERMISSIBLE
AVERAGE EDGE DISTANCE
MARKED IS

SYMBOL √ DENOTES SURFACE
TO BE MACHINED

UNLESS OTHERWISE SPECIFIED
TOLERANCE ON FLANGES IS ± 1/32

LENGTHS OF AN, NAS & MS AL ALY
RIVETS SHORTER THAN 1 INCH ARE
NOT SPECIFIED

TOLERANCE ON LOFTED
DELINEATIONS IS

DWG SIZE 34 X 88

22.5 SQ. FT.
5.6 SQ. FT.

PRINTING INFO ONLY
FULL SIZE SHEET AREA (36 X 90)=
1/2 SIZE SHEET AREA (1/4 OF FULL)=

PRINT TRIM LINE

D C B A

LDW280-52574 A
LDW280-52574 A

02/02 NAS 9-1100

GRUMMAN AIRCRAFT ENGRG CORP., BETHPAGE, L. I., NEW YORK

LM	SIZE J	CODE IDENT NO. 26512	LDW280-52574	A
MODEL OR END ITEM	SCALE FULL		SHEET 4.00	

2

-52574 SH 4

FOR PHOTO REPRODUCTION

2 FRAMES

A *

ENG 32.2 REV 3-65

GRUMMAN AIRCRAFT ENGINEERING CORP.
CODE IDENT NO. 26512
ENGINEERING ORDER EMF-A

DWG. NO. LDW280-52574 EO NO. A1
CONTROL INFO NO. LDW280A5995

1. ADD LDW280-52571-1 & HARDWARE, AS SHN BELOW, CREATING -5 SHIELD ASSY. IN B/M FOR -3: REMOVE(1) FROM -1 & ADD(1) TO -5; ADD "SEE NOTE *" TO FINISH NO. COLUMN.
2. ON F/D & IN B/M REMOVE THE FOLLOWING PARTS & ASSOC. HARDWARE FROM -1 & ADD THEM TO -5: LDW280-18271-11, -12, -13 & -14 (1EA), LDW280-18272-11 & 12 (1EA) & LDW280-18273-19(1) (ONLY -5 & THE HARDWARE JOINING IT TO LDW280-25662 SHALL REMAIN ON -1.)
3. IN M/B FOR -1, ADD QUAL TEST (70) EFF, (1) REQ'D/MOD., N/A "SEE NOTE **" NOTE **: -1 TO BE USED IN CONJUNCTION WITH RYAN AERONAUTICAL CO. TEST PLAN #53695-88
4. ADD NOTE & FINISH -3 IN ACCORDANCE WITH LPC280-32.

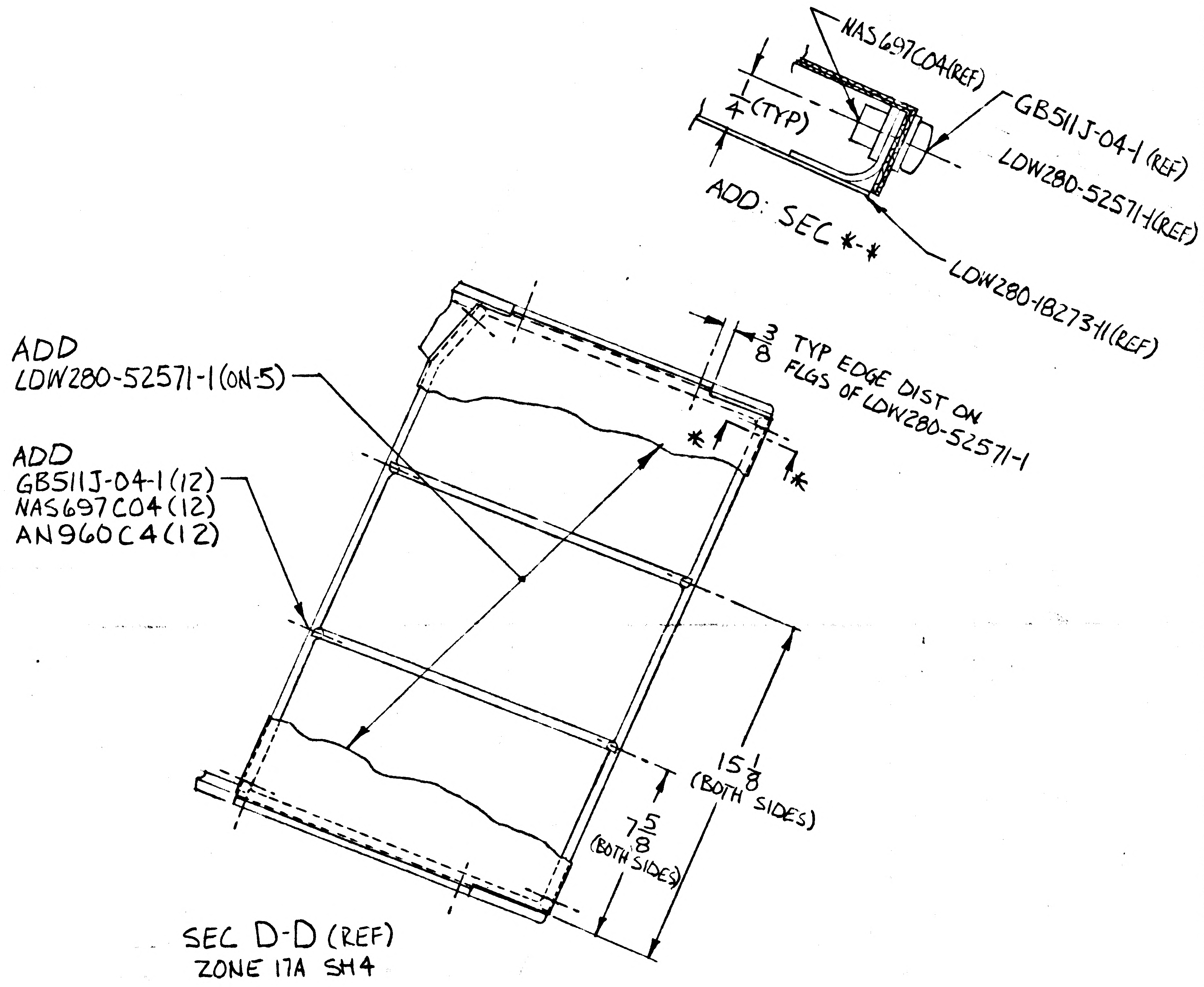
NAS697C04(REF)
GB511J-04-1 (REF)
LDW280-52571-1(REF)
LDW280-18273-11(REF)
1/4 (TYP)
ADD: SEC *-*
3/8 TYP EDGE DIST ON FLGS OF LDW280-52571-1
ADD LDW280-52571-1 (ON-5)
ADD GB511J-04-1(12) NAS697C04(12) AN960C4(12)
15 1/8 (BOTH SIDES)
7 5/8 (BOTH SIDES)
SEC D-D (REF)
ZONE 17A SH4

** NEXT HIGHEST NOTE NOS.
* NEXT HIGHEST SECTION LETTER

DETAIL SPEC REQ	☐	CL II ENGRG CHG	☐	CL I ENGRG CHG	✓	LCD 19-809	5

REASON FOR EO: HEAT SHIELD REQ'D TO PROTECT LANDING RADAR REFLECTOR LCD 809

DESCRIPTION OF EO: ADDED LDW280-52571-1 CREATING -5. REMOVED -3(1), LDW280-18271-11, -12, -13 & -14 (1EA.), LDW280-18272-11 & -12 (1EA) & LDW280-18273-19(1) FROM -1 & ADDED THEM TO -5. IN M/B FOR -1 ADDED QUAL. TEST EFF. ADDED NOTES ** & SEC *-*.

GAEC EO RELEASE: JK 4/17/67

MODEL	PROCURING ACTIVITY NO.	GAEC UNIT NO.	SUB CONTR UNIT NO.
LM		LM-2(32) THRU LM-15(45) & QUAL. TEST (70)	

DRAWING CHANGE REQD: REVISE DWG	RECORD EO	DISPOSITION OF PARTS: REWORK	SCRAP
✓		✓	

		SUPPORT	RELIAB. GROUP	GROUP LEADER	STRESS GROUP	LIAISON ENGRG	PROJ ENGRG	GOVT
APPROVED BY								
DATE	4/6/67			4/6/67	4/11/67		4/13	4/14/67
5	V.21							

PRIORITY: C
DRAWING TITLE: SHIELD INSTL~DES STG~L.R. REFLECTOR
DRAWING NO.: LDW280-52574
EO NO.: A1

ISSUED BY R WINK / J. STRAKOSCH x1153 SECTION VEH. DES. INT. GROUP NO. 335 PL 25

01 NAS 9-1100

B

ENG 32.1 REV 3-65

GRUMMAN AIRCRAFT ENGINEERING CORP.
CODE IDENT NO. 26512
ENGINEERING ORDER EMF-A

DWG. NO. LDW280-52574		EO NO. A2
CONTROL INFO NO. LM-2-3547		

IN F/D & B/M ON -3 ASSY

REPLACE LDW280-18271-15 WITH LDW280-18271-21

REPLACE LDW280-18271-19 WITH LDW280-18271-23

DETAIL SPEC REQ	☐	CL II ENGRG CHG	✓	CL I ENGRG CHG	☐

2

REASON FOR EO
PARTS REDESIGNED

DESCRIPTION OF EO
IN F/D & B/M ON -3:
LDW280-18271-23 WAS LDW280-18271-19
LDW280-18271-21 WAS LDW280-18271-15

Ⓡ GAEC EO RELEASE C
JK

MODEL	EFFECTIVITY		
	PROCURING ACTIVITY NO.	GAEC UNIT NO.	SUB CONTR UNIT NO.
LM		LM2(32) THRU	
		LM-15(45)	

DRAWING CHANGE REQD		DISPOSITION OF PARTS		APPROVED BY								
✓		✓		DATE	7/6/67				7/2/67	5/1/67	5-5-67	5-2-67
REVISE DWG	RECORD EO	REWORK	SCRAP	1	VOI	SUPPORT	RELIAB. GROUP	GROUP LEADER	STRESS GROUP	LIAISON ENGRG	PROJ ENGRG	~~GOVT~~

PRIORITY	DRAWING TITLE	DRAWING NO.	EO NO.
C_2	D/S SHIELD INSTALLATION -LANDING RADAR REFLECTOR	LDW280-52574	A2

ISSUED BY LIAISON G. MARTELL x 3604 SECTION VEH DES INT GROUP NO. 335 PL 25

01 NAS 9-1100

QD

GRUMMAN AIRCRAFT ENGINEERING CORP.
CODE IDENT NO. 26512
ENGINEERING ORDER

ENG 32.1 REV 3-65

DWG. NO. LDW280-52574
EO NO. A3
CONTROL INFO NO. LM-2-3595

THIS IS A REVISION OF EO-A1

IN FLD/DWG & B/M FOR -5
ADD MS20615-2M3(24) FOR ATTACHMENT OF
NAS697C04(12)(REF) PLATENUTS

THIS IS A REVISION OF EO-A2

REVISE EFFECTIVITY OF EO
FROM: LM-2(32) THRU LM-15(45)
TO: LM-2(32) THRU LM-15(45) & QUAL TEST(70)

2

DETAIL SPEC REQ ☐ CL II ENGRG CHG ☑ CL I ENGRG CHG ☐

REASON FOR EO: RIVETS TO FASTEN PLATENUTS OMITTED
QUAL TEST(70) EFF. ADDED BY EO-A1

DESCRIPTION OF EO: REFERENCE EO-A1
FOR -5, ADDED MS20615-2M3(24)
REFERENCE EO-A2: ADDED QUAL TEST(70) EFF.

② GAEC EO RELEASE: JK 02181

MODEL	PROCURING ACTIVITY NO.	GAEC UNIT NO.	SUB CONTR UNIT NO.
LM		LM-2(32) THRU	
		LM-15(45)	
		QUAL. TEST(70)	

DRAWING CHANGE REQD: REVISE DWG ✓ RECORD EO
DISPOSITION OF PARTS: REWORK ✓ SCRAP

APPROVED BY								
DATE	7/6/67				6/1/67	6/1/67	6/5/67	6/1/67
-1-	UDI	SUPPORT	RELIAB. GROUP	GROUP LEADER	STRESS GROUP	LIAISON ENGRG	PROJ ENGRG	

PRIORITY: C
DRAWING TITLE: SHIELD INSTL~DESCENT STAGE LANDING RADAR REFLECTOR
DRAWING NO. LDW280-52574
EO NO. A3

ISSUED BY LIAISON J. MALONEY 5/31/67 X3604 SECTION V.D.I. GROUP NO. 335 PL 25

01

NAS 9-1100

A

ENG 32.1 REV 3-65

GRUMMAN AIRCRAFT ENGINEERING CORP.
CODE IDENT NO. 26512
ENGINEERING ORDER

*

DWG. NO. LDW280-52574		EO NO. A4
CONTROL INFO NO. LDW280A 7522		

THIS IS A REVISION TO EO A1

ADD NOTE ⁑ FINISH -3 WITH SPEREX VHT WHITE
PAINT PER LPC 280-32

WAS:

ADD NOTE ⁑ FINISH -3 IN ACCORDANCE WITH LPC 280-32

ADD -7 IDENTICAL TO -1 EXCEPT -9 REPLACES -5
ADD -9 " " -5 " -11 " -3
ADD -11 IDENTICAL TO -3 EXCEPT FINISH IS NONE

FOR -7 N/A IS SEE NOTE ⁂ EFFECTIVITY QUAL TEST (70)
FOR -1 REMOVE QUAL TEST (70) EFFECTIVITY

DETAIL SPEC REQ	☐	CL II ENGRG CHG	☐	CL I ENGRG CHG	☑	LCD-809	5

REASON FOR EO	DESCRIPTION OF EO	Ⓡ GAEC EO RELEASE
HEAT SHIELD REQ'D TO PROTECT LDG RADAR REFLECTOR	REF EO A1 'IN NOTE ⁑ ADD "FINISH -3 WITH SPEREX VHT WHITE PAINT" FOR -1 REMOVED QUAL TEST (70) EFF. ADDED -7, -9, -11	C JK 6/13/7

MODEL	PROCURING ACTIVITY NO.	GAEC UNIT NO.	SUB CONTR UNIT NO.
LM		LM-2 (32) THRU	
		LM-15 (45)	
		QUAL TST (70)	

DRAWING CHANGE REQD		DISPOSITION OF PARTS										
				APPROVED BY								
✓			✓	DATE	6/13/67			6/13/67	6/13/67		6/14/67	6/14/67
REVISE DWG	RECORD EO	REWORK	SCRAP	5	VDI	SUPPORT	RELIAB. GROUP	GROUP LEADER	STRESS GROUP	LIAISON ENGRG	PROJ ENGRG	~~CONT~~

PRIORITY	DRAWING TITLE	DRAWING NO.	EO NO.
C	SHLD INSTL - D/S - L.R. REFLECTOR	LDW280-52574	A4

ISSUED BY J. STRAKOSCH X1153 SECTION VDI GROUP NO. 335 PL 25

01 NAS 9-1100

B PS

ENG 32.2 REV 3-65

GRUMMAN AIRCRAFT ENGINEERING CORP.
CODE IDENT NO. 26512 *
ENGINEERING ORDER

DWG. NO. LDW280-52574
EO NO. A5
CONTROL INFO NO. LM-2-3669

EXISTING HOLES MAYBE LEFT OPEN.

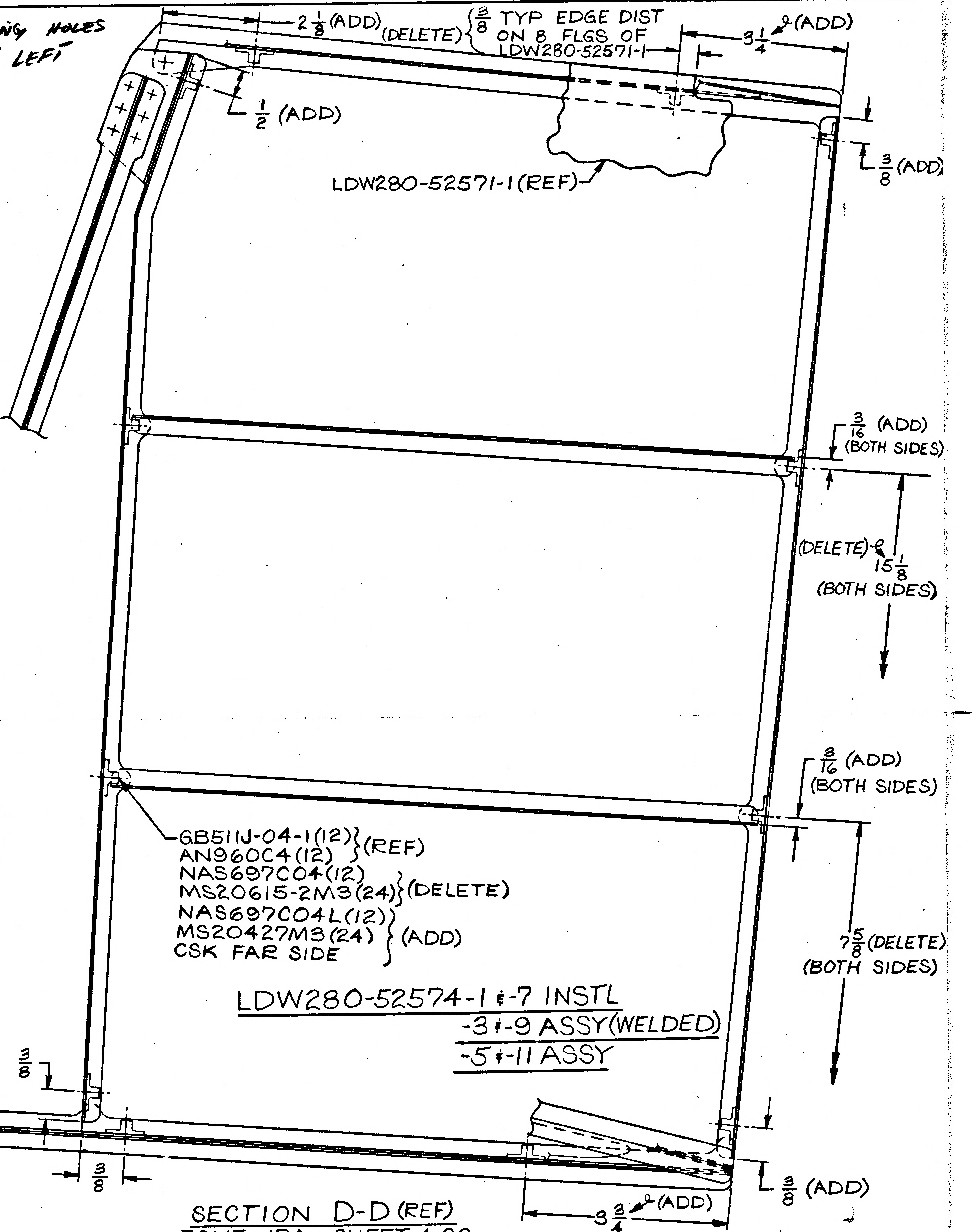

2 1/8 (ADD)
(DELETE) {3/8 TYP EDGE DIST ON 8 FLGS OF LDW280-52571-1
3 1/4 ℄ (ADD)
1/2 (ADD)
LDW280-52571-1 (REF)
3/8 (ADD)
3/16 (ADD) (BOTH SIDES)
(DELETE) ℄ 15 1/8 (BOTH SIDES)
3/16 (ADD) (BOTH SIDES)
GB511J-04-1(12)
AN960C4(12) } (REF)
NAS697C04(12)
MS20615-2M3(24) } (DELETE)
NAS697C04L(12)
MS20427M3(24)
CSK FAR SIDE } (ADD)
LDW280-52574-1 & -7 INSTL
-3 & -9 ASSY (WELDED)
-5 & -11 ASSY
7 5/8 (DELETE) (BOTH SIDES)
3/8
3/8
3/8 (ADD)
3 3/4 ℄ (ADD)

SECTION D-D (REF)
ZONE 17A SHEET 4.00

DETAIL SPEC REQ		CL II ENGRG CHG	✓	CL I ENGRG CHG	

REASON FOR EO: IMPOSSIBLE TO ATTACH HDW AT ORIGINAL LOCATIONS, ORIGINAL HDW UNAVAILABLE

DESCRIPTION OF EO: FOR -5, IN FLD & B/M, ADDED NAS697C04L(12) & MS20427M3(24). DELETED NAS697C04(12) & MS20615-2M3(24). IN FLD, REVISED LOCATING DIMENSIONS.

GAEC EO RELEASE: C JL 02025

MODEL	PROCURING ACTIVITY NO.	GAEC UNIT NO.	SUB CONTR UNIT NO.
LM		LM-2(32) THRU	
		LM-15(45)	
		QUAL. TEST(70)	

DRAWING CHANGE REQD: REVISE DWG	RECORD EO	DISPOSITION OF PARTS: REWORK	SCRAP
✓		✓	

APPROVED BY		SUPPORT	RELIAB. GROUP	GROUP LEADER	STRESS GROUP	LIAISON ENGRG	PROJ ENGRG	
DATE	7/5/67				6/21/67	6/20/67	7/5/67	7/7/67
-1-	VDI							

PRIORITY: C

DRAWING TITLE: SHIELD INSTL~DESCENT STAGE LANDING RADAR REFLECTOR

DRAWING NO. LDW280-52574
EO NO. A5

ISSUED BY LIAISON J. MALONEY 6/19/67 X3604 SECTION V.D.I. GROUP NO. 335 PL 25

01
NAS 9-1100

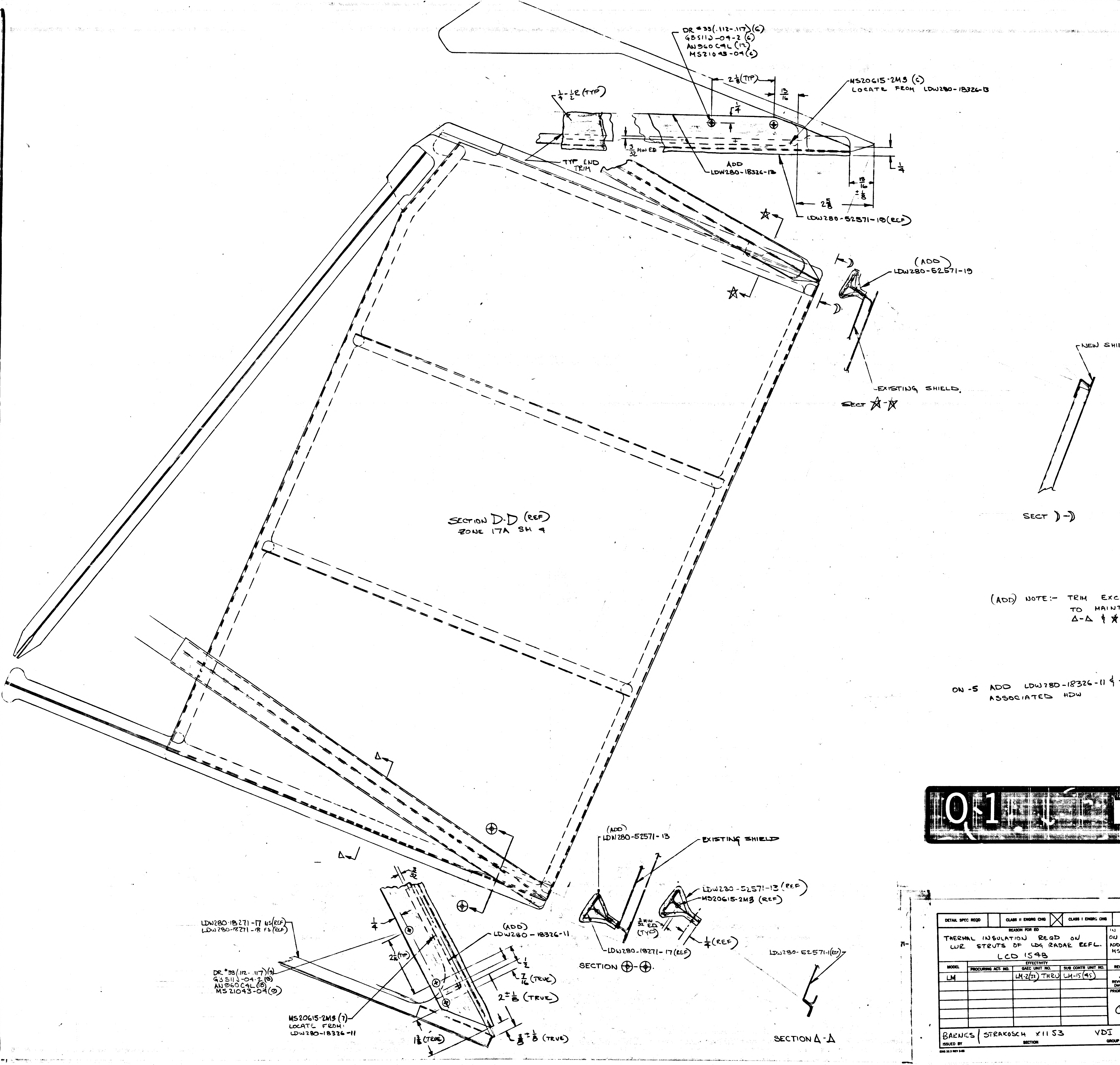
DR #33(.112-.117)(6)
GB511J-04-2 (6)
AN960C4L (12)
MS21043-04(6)
2 1/8 (TYP)
13/16
MS20615-2M3 (6)
LOCATE FROM LDW280-18326-13
1/4
1/4-1/2 (TYP)
3/32 MIN ED
TYP END TRIM
ADD
LDW280-18326-13
13/16 ± 1/8
2 5/8
LDW280-52571-19(REF)
★
(ADD)
LDW280-52571-19
)
EXISTING SHIELD
SECT ★-★
NEW SHIELD
SECT)-)
SECTION D-D (REF)
ZONE 17A SH 4
Δ
⊕
3/32
1/4
2 1/16 (TYP)
LDW280-18271-17 NS(REF)
LDW280-18271-18 FS(REF)
DR #33(.112-.117)(9)
G3511J-04-2(9)
AN960C4L(18)
MS21043-04(9)
(ADD)
LDW280-18326-11
1/2
7/16 (TRUE)
2 ± 1/8 (TRUE)
MS20615-2M3 (7)
LOCATE FROM:
LDW280-18326-11
1 3/8 (TRUE)
3/8 ± 1/8 (TRUE)
(ADD)
LDW280-52571-13
EXISTING SHIELD
LDW280-52571-13 (REF)
MS20615-2M3 (REF)
3/32 MIN E.D (TYP)
1/4 (REF)
LDW280-18271-17 (REF)
SECTION ⊕-⊕.
LDW280-52571-1(REF)
SECTION Δ-Δ

(ADD) NOTE:- TRIM EXCESS MATL OFF LDW280-52571-13 & -19 TO MAINTAIN SHAPE AS SHOWN IN SECTIONS ⊕-⊕ Δ-Δ & ★-★

ON -5 ADD LDW280-18326-11 & -13, LDW280-52571-13 & -19 1EA REQD & ASSOCIATED HDW

01

NAS 9-1100

B

5

DETAIL SPEC REQD		CLASS II ENGRG CHG	☒	CLASS I ENGRG CHG		LCD 1548					CONTROL INFO NO. LDW280A7771	
REASON FOR EO THERMAL INSULATION REQD ON LWR STRUTS OF LDG RADAR REFL. LCD 1548						DESCRIPTION OF EO IN B/M & F/D ON -5 ADDED LDW280-18326-11 & -13, LDW280-52571-13 & -19 (1EA) ADDED DR #33 GB511J-04-2(15) AN960C4L(30), MS2104304(15) MS20615-2M3(13)					GRUMMAN EO RELEASE C JK 7/20/67	
MODEL	EFFECTIVITY: PROCURING ACT. NO.	GAEC UNIT NO.	SUB CONTR UNIT NO.	DRAWING REVISION REQD		DISPOSITION OF PARTS		BY / DATE 7/14/67 VDI				
LM		LM-2(32) THRU	LM-15(45)	REVISE DWG ✓	RECORD EO	REWORK ✓	SCRAP	SUPPORT	RELIAB GROUP	GROUP LEADER 7/13/67	STRESS GROUP 7/17/67	LIAISON ENGRG	PROJ ENGR 7/18/67	~~GOVT~~ 7-20-67
				PRIORITY C	DRAWING TITLE SHIELD INSTALLATION DESCENT STAGE — LANDING RADAR REFLECTOR					ENGINEERING ORDER DRAWING NO. LDW280-52574	EO NO. A6	
BARNES ISSUED BY	STRAKOSCH X1153 SECTION	VDI GROUP NO.	33T	25 PL	CODE IDENT NO. 26512	GRUMMAN AIRCRAFT ENGINEERING CORP BETHPAGE, L. I., N. Y.						

ENG 32.3 REV 3-65

ENG 32 RELEASED BY LIAISON

GRUMMAN AIRCRAFT ENGINEERING CORP.
CODE IDENT NO. 26512
ENGINEERING ORDER

DWG. NO. LDW280-52574		EO NO. A7	
CONTROL INFO NO. LM5-17867			

F/D+B/M ON-1 CHANGE HWD AS SHOWN.

REWORK INFO:
IF GB511J-06-2 INSTALLED MIN. EDGE DISTANCE 1 DIA. PERMISSIBLE. USE AS IS.

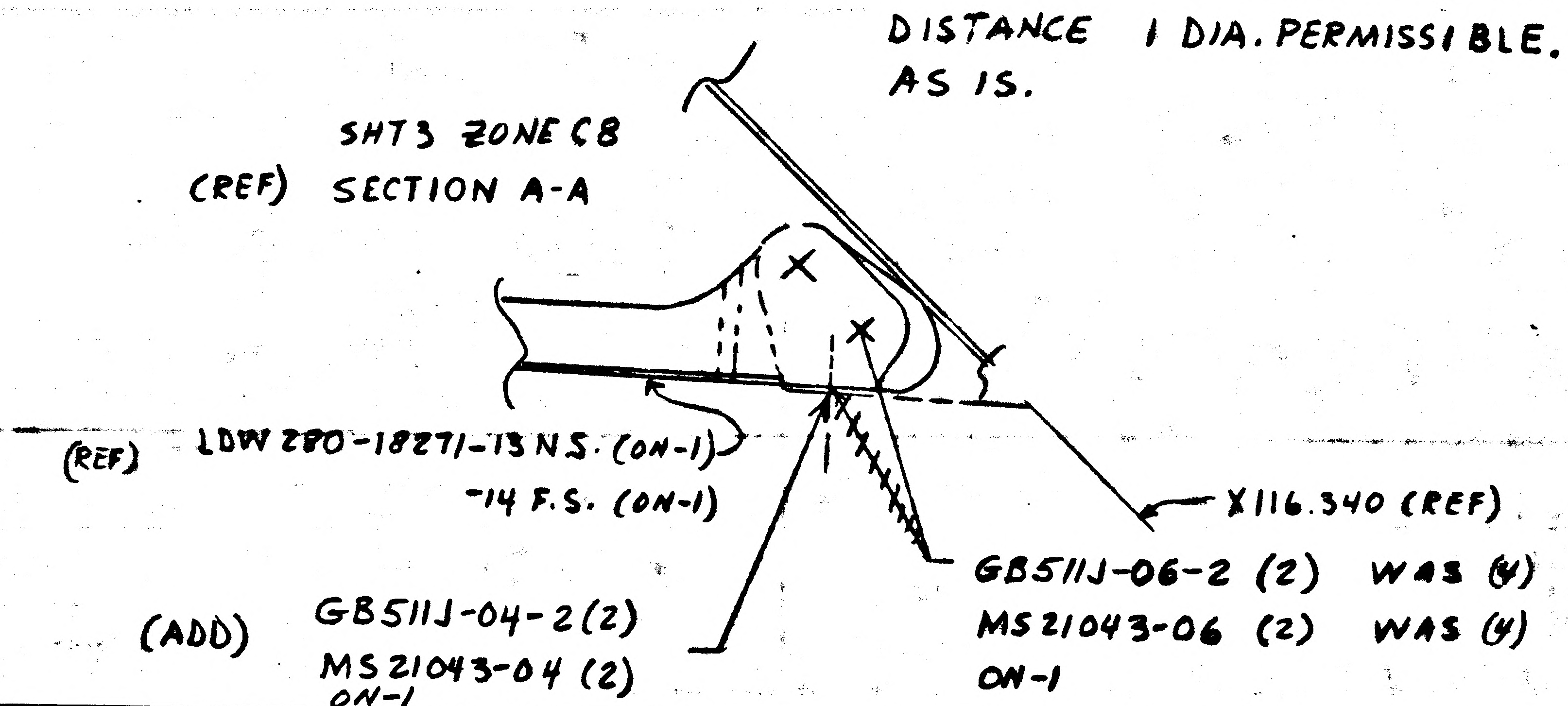
SHT3 ZONE C8
(REF) SECTION A-A
(REF) LDW280-18271-13 N.S. (ON-1)
-14 F.S. (ON-1)
X116.340 (REF)
GB511J-06-2 (2) WAS (4)
MS21043-06 (2) WAS (4)
ON-1
(ADD) GB511J-04-2(2)
MS21043-04 (2)
ON-1

DETAIL SPEC REQ	☐	CL II ENGRG CHG	✓	CL I ENGRG CHG	☐

REASON FOR EO	DESCRIPTION OF EO	GAEC EO RELEASE
EDGE DISTANCE PROBLEM WHEN INSTALLING HWD.	ON-1 F/D+B/M REMOVED GB511J-06-2 (2) AND MS21043-06(2). ADDED GB511J-04-2(2) & MS21043-04(2)	(5) JK 32

MODEL	PROCURING ACTIVITY NO.	GAEC UNIT NO.	SUB CONTR UNIT NO.
LM		LM-2 (32)	
		THRU	
		LM-15 (45)	QUALTEST (70)

DRAWING CHANGE REQD		DISPOSITION OF PARTS										
REVISE DWG ✓	RECORD EO	REWORK ✓	SCRAP	APPROVED BY								
				DATE	1/22/68				1-23-68	1/22/68	1/27/68	1/23/68
				1-19-68	VDI	SUPPORT	RELIAB. GROUP	GROUP LEADER	STRESS GROUP	LIAISON ENGRG	PROJ ENGRG	~~COMD~~

PRIORITY	DRAWING TITLE	DRAWING NO.	EO NO.
C	SHIELD INSTALLATION D/S LANDING RADAR REFLECTOR	LDW280-52574	A7

ISSUED BY LIAISON J. GRASSIANO X86755 SECTION VDI GROUP NO. 280 PL 25

01

NAS 9-1100

ENG 32 REV 3-65

GRUMMAN AIRCRAFT ENGINEERING CORP.
CODE IDENT NO. 26512
ENGINEERING ORDER

DWG. NO. LEO 280
EO NO. 1099
CONTROL INFO NO. LDW-280-B4990

FOR PART NO. SHOWN REVISE N/A (NOW) LDW 280-66661
(WAS) LDW 280-25661.

EFF LM-6(36) THRU LM-15(45)
IN F/D ADD NOTE ☒ THIS PART MAY BE AFFECTED BY
LFM 200 LM-5(35)

DRAWING NO *	CHANGE	TITLE
LDW 280-25675-13	D8	SEE DWG
↕ -25676-1	B2	↕
-25708-13	B10	
-25709-3	B1	
-25710-7	B5	
LDW 280-52574-1	A8	SEE DWG

LFM

☒ USE NEXT AVAILABLE NOTE NO.

DETAIL SPEC REQ ☐ CL II ENGRG CHG ✓ CL I ENGRG CHG ☐

LCD 2965 PKG 1

REASON FOR EO: BASE HEAT SHIELD REDESIGN FOR D/E THRUST DECAY

DESCRIPTION OF EO: FOR PART NUMBERS ~~NOTED~~ * REVISED N/A (WAS) LDW 280-25661 (NOW) LDW 280-66661. EFF LM 6(36) THRU LM 15(45). ADDED NOTE ■ THIS PART MAY BE AFFECTED BY LFM 200 LM 5(35)

GAEC EO RELEASE: (5) JK 8/19/68

MODEL	EI ~~PROCURING ACTIVITY NO.~~	GAEC UNIT NO.	SUB CONTR UNIT NO.
LM		LM 6(36) THRU	
LM		LM 15(45)	
LM	LFM 200	LM 5(35)	

DRAWING CHANGE REQD: ✓ REVISE DWG ☐ RECORD EO

DISPOSITION OF PARTS: NOT REQD (REWORK / SCRAP)

APPROVED BY								
DATE	8/6/68	8/7/68		8-5-68	8/8/68		8/8/68	8/9/68
	VDI	THERMO ~~SUPPORT~~	RELIAB. GROUP	GROUP LEADER	STRESS GROUP	LIAISON ENGRG	PROJ ENGRG	GOVT

APPROVED BY: mm, NM

PRIORITY: C
DRAWING TITLE: NOTED
DRAWING NO.: LEO 280
EO NO.: 1099

080968
ISSUED BY P GEORGOPOULOS / P THORJUSEN EXT 1153
SECTION VDI
GROUP NO. 335
PL 25

01 NAS 9-1100

GRUMMAN AIRCRAFT ENGINEERING CORP.
CODE IDENT NO. 26512
ENGINEERING ORDER

ENG 32.1 REV 3-65

DWG. NO. LEO 280
EO NO. 1182
CONTROL INFO NO. LDW 280-5803

FOR THE LISTED DRAWINGS REVISE N/A TO LDW280-66661
(WAS) LDW 280-25661

EFFECTIVITY LM-5(35)

DRAWING NO.	TITLE	CHG LTR.
LDW280-25675-13	SEE DWG	E1 ✓
-25676-1	↕	B3 ✓
-25708-13		C1 ✓
-25709-3		B2 ✓
-25710-7		B6 ✓
LDW280-52574-1	SEE DWG	A9 ✓

DETAIL SPEC REQ ☐ CL II ENGRG CHG ☐ CL I ENGRG CHG ☑ LCD 2965 PKG 5 CCA 1235

GAEC EO RELEASE C

REASON FOR EO: BASE HEAT SHIELD REDESIGN FOR D/E THRUST DECAY

DESCRIPTION OF EO: FOR LISTED DWGS REVISED N/A TO LDW280-66661 (WAS) LDW280-25661

MODEL	EFFECTIVITY: PROCURING ACTIVITY NO.	GAEC UNIT NO.	SUB CONTR UNIT NO.
LM		LM-5 (35)	

DRAWING CHANGE REQD: REVISE DWG ✓ RECORD EO

DISPOSITION OF PARTS: REWORK NOT REQD SCRAP

	VDI	SUPPORT	RELIAB. GROUP	GROUP LEADER	STRESS GROUP	LIAISON ENGRG	PROJ ENGRG	GOVT
APPROVED BY	JWS			PSY	W/bl		JAP	JM
DATE	10/2/68			10/18/68	11/21/68		10/22/68	

PRIORITY C

DRAWING TITLE NOTED

DRAWING NO. LEO 280

EO NO. 1182

102568
ISSUED BY P GEORGOPOULOS / P THORJUSEN X86046 SECTION VDI GROUP NO. 335 PL 25

01

NAS 9-1100

GRUMMAN AIRCRAFT ENGINEERING CORP.
CODE IDENT NO. 26512
ENGINEERING ORDER

ENG 32.1 REV 3-65

DWG. NO. LEO 280 | EO NO. 1444
CONTROL INFO NO. LDW280B7453

FOR THE DWGS LISTED BELOW DELETE LM-15(45) EFF FROM ALL DASH NOS. *

DWG NO.	CHANGE NO.	DWG NOMENCLATURE
LDW280-51642	B4	SEE DWG
-51818	B1	
-51823	A3	
-52571	A3	
-52574	B3	
LDW280-52627	B4	SEE DWG

* APPLICABLE DASH NOS

DETAIL SPEC REQ	☐	CL II ENGRG CHG	☐	CL I ENGRG CHG	☑	LCD3587 PKG 56 PG 1 CCA 1821 (5)

REASON FOR EO: LM-15(45) NO LONGER REQD

DESCRIPTION OF EO: DELETED LM-15(45) EFF FROM -*

GAEC EO RELEASE: VC 5/7/69

MODEL	EFFECTIVITY: PROCURING ACTIVITY NO.	GAEC UNIT NO.	SUB CONTR UNIT NO.
LM		LM-15(45)	

DRAWING CHANGE REQD: REVISE DWG ✓ | RECORD EO

DISPOSITION OF PARTS: REWORK | SCRAP ✓

APPROVED BY	VDI	SUPPORT	RELIAB. GROUP	GROUP LEADER	STRESS GROUP	LIAISON ENGRG	PROJ ENGRG	GOVT
				PJH	WJH		JaP	
DATE	4/18/69			4-2-69	4/8/69		4/9/69	5/7/69

PRIORITY: C
DRAWING TITLE: SEE DWG
DRAWING NO.: LEO 280
EO NO.: 1444

052869 ISSUED BY MEVORAH / THORJUSEN X86046 SECTION VEH DES INT GROUP NO. 335 PL 25

01

NAS 9-1100

ENG 32.1 REV 3-65

GRUMMAN AIRCRAFT ENGINEERING CORP.
CODE IDENT NO. 26512

ENGINEERING ORDER

DWG. NO. LDW280-52574
EO NO. B4
CONTROL INFO NO LM-29-1374

(REF) E.O. A5

ON-5

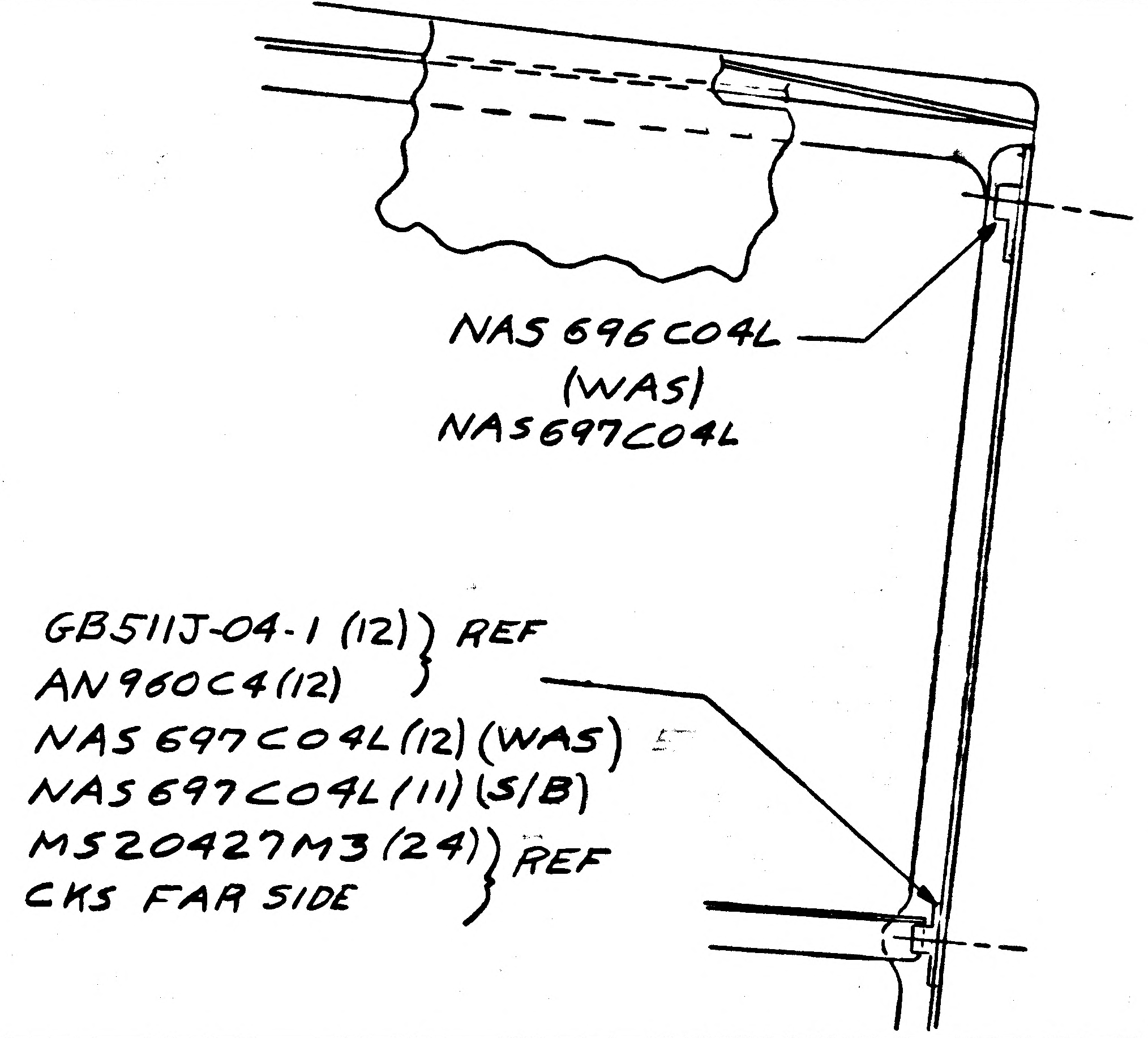
NAS 696C04L
(WAS)
NAS697C04L
GB511J-04-1 (12) REF
AN960C4(12)
NAS 697C04L (12) (WAS)
NAS 697C04L (11) (S/B)
MS20427M3 (24) REF
CKS FAR SIDE

DETAIL SPEC REQ		CL II ENGRG CHG	✓	CL I ENGRG CHG		(29)

REASON FOR EO: TO IMPROVE EDGE DISTANCE IN STIFFENER

DESCRIPTION OF EO: FOR -5, IN FLD & B/M, ADDED NAS 696C04L (1) DELETED NAS697C04L (1)

GAEC EO RELEASE

MODEL	PROCURING ACTIVITY NO.	GAEC UNIT NO.	SUB CONTR UNIT NO.
LM.		LM-10 (40)	
		THRU	
		LM-15 (45)	

DRAWING CHANGE REQD: REVISE DWG ✓ RECORD EO
DISPOSITION OF PARTS: REWORK ✓ SCRAP

APPROVED BY		SUPPORT	RELIAB. GROUP	GROUP LEADER	STRESS GROUP	LIAISON ENGRG	PROJ ENGRG	
					J.K.	VJB		Botti
DATE	5/27/69			5/3/69	5/9/69	5-9-69	5/9/69	5/15/69
	VD							

PRIORITY: C
DRAWING TITLE: SHIELD INSTL. DESCENT STAGE LANDING RADAR REFLECTOR
DRAWING NO. LDW280-52574
EO NO. B4

ISSUED BY LIAISON PL 29 × E. STELLA ×7930 SECTION V.D.1 GROUP NO. 335 PL 25

01

NAS 9-1100

LDW280-52582 A

MODEL OR END ITEM	NEXT ASSY	MODULE OR SER NO.	REQD PER MODULE OR END ITEM
PART NO.		GAEC SCH NO.	

MODEL OR END ITEM	NEXT ASSY	MODULE OR SER NO.	REQD PER MODULE OR END ITEM
PART NO.		GAEC SCH NO.	

MODEL OR END ITEM	NEXT ASSY	MODULE OR SER NO.	REQD PER MODULE OR END ITEM
LM	LDW280-52674	LM-15(45)	2
LM		LM-14(44)	2
LM		LM-13(43)	2
LM		LM-12(42)	2
LM		LM-11(41)	2
LM		LM-10(40)	2
LM		LM-9(39)	2
LM		LM-8(38)	2
LM		LM-7(37)	2
LM		LM-6(36)	2
LM		LM-5(35)	2
LM		LM-4(34)	2
LM		LM-3(33)	2
LM	LDW280-52674	LM-2(32)	2
PART NO. LDW280-52582-1		GAEC SCH NO. 522	

2

SH REV STATUS: FOR DESCRIPTION OF REV SEE SUBQ SH

SHEET	1.00	1.10	2.00	3.00						
REV	A	A	A	A						
SHEET										
REV										
SHEET										
REV										

LAST SECT LTR USED		GRUMMAN REL INFO A			
LAST DASH NO. USED	-13	PRIM NO.	LE(001)		EMF
		215	MP-14	A-1-30-7	

UNLESS OTHERWISE SPECIFIED DIMENSIONS ARE IN INCHES.
TOLERANCE UNLESS SPECIFIED
FRACTIONS - DECIMALS – ANGLES
± 1/32 ±.020 ± 1/2°

ORIG DWG AUTH
DETAIL SPEC REQUIREMENT
CLASS II ENGRG CHANGE
CLASS I ENGRG CHANGE

CONTRACT NO. NAS 9-1100
LINE ITEM # 1
DOCUMENTATION TYPE II

DRAWN BY	FITZGERALD 12/22/66	RELIABILITY	
LAYOUT BY	CLARK		
CHECKED BY	EG 1-6-66		
GR.LEADER			
VEH DES INT	1/25/67		
STRUCTURES	WJH 1/26/67	PROJ ENGR	1/26/67
STRUCTURES	1/26	REL GROUP	1/27/67
WEIGHTS			

GRUMMAN AIRCRAFT ENGRG CORP
BETHPAGE, L. I., NEW YORK

HINGE ASS'Y
DESCENT STAGE-QUAD II~SCIENTIFIC EQUIP.
SUPPORT ACCESS FLAP

SIZE	CODE IDENT NO.		
B	26512	LDW280-52582	A
SCALE	NONE	SHEET 1.00 OF 4	

ENG 77.1 12-65

01

NAS 9-1100

REVISIONS FOR CONTINUATION OF REVISIONS SEE SHEET ________

CHANGE LTR	ITEM NO.	SHEET NO.	ZONE	GRUMMAN INFO ONLY	DET SPEC	CLASS I	CLASS II	ENGRG ORDER	DESCRIPTION	EFFECTIVITY	DISPOSITION OF EXISTING PARTS		CHANGED BY AND DATE	ENGRG APPD	APPD
											REWORK	SCRAP			
A	1	1.00, 1.10 2.00 & 3.00						EO A1	INITIAL DWG RELEASE PARTS MADE PER EO –	LM-2 THRU LM-15	NOT	REQ'D	FITZ-GERALD 12-21-65	1/3/67	1-27-67
	2	1.10 & 3.00							(REF EO A1) ON-11 1 17/32 DIM WAS 1 1/16	NOT REQD	NOT	REQD	WCG		

CHG APPROVED

LTR	~~GROUP LDR~~	VEH.DES.INT	STRUCTURES	STRUCTURES	WEIGHTS	RELIABILITY					
A											

GRUMMAN AIRCRAFT ENGRG CORP., BETHPAGE, L. I., NEW YORK

SIZE	CODE IDENT NO.		
B	26512	LDW280-52582	A
SCALE NONE			SHEET 1.10

ENG 77.16 3-66

01

NAS 9-1100

QTY PER ASSEMBLY -1	CODE IDENT	PART NO.	I&T	NOMENCLATURE OR DESCRIPTION	MATERIAL	GOVT SPEC	COML SPEC	STOCK SIZE	PROCESS SYM	FINISH NO.	ZONE
1		MS20253-P2-250	E	PIN	STD PART						
1		G104-345		SPRING	GRUMMAN STD						
1		LDW280-52582-13		HINGE			MAKE FROM MS20001-X9-250				
1		LDW280-52582-11		HINGE			MAKE FROM MS20001-Y9-250				
		LDW280-52582-1	E	HINGE ASS'Y					NONE	NONE	

SYM OR NO.	PROCESS OR FINISH	GRUMMAN SPEC OR MILITARY SPEC	SYM OR NO.	PROCESS OR FINISH	GRUMMAN SPEC OR MILITARY SPEC	SYM OR NO.	PROCESS OR FINISH	GRUMMAN SPEC OR MILITARY SPEC

I & T: IDENTIFICATION AND TRACEABILITY IN ACCORDANCE WITH : NONE

GRUMMAN AIRCRAFT ENGRG CORP, BETHPAGE, L. I., NEW YORK

SIZE	CODE IDENT NO.		
B	26512	LDW280-52582	A
SCALE NONE			SHEET 2.00

ENG 77.2 7-65

01

NAS 9-1100

MANUFACTURING OPERATIONS
UNLESS OTHERWISE SPECIFIED
NOTES CHECKED ✓ APPLY TO THIS DWG

RUBBER STAMP PART NUMBER AND ALL OTHER MARKINGS IN REGION MARKED ☒ USE BOTH SIDES IF NECESSARY. ✓

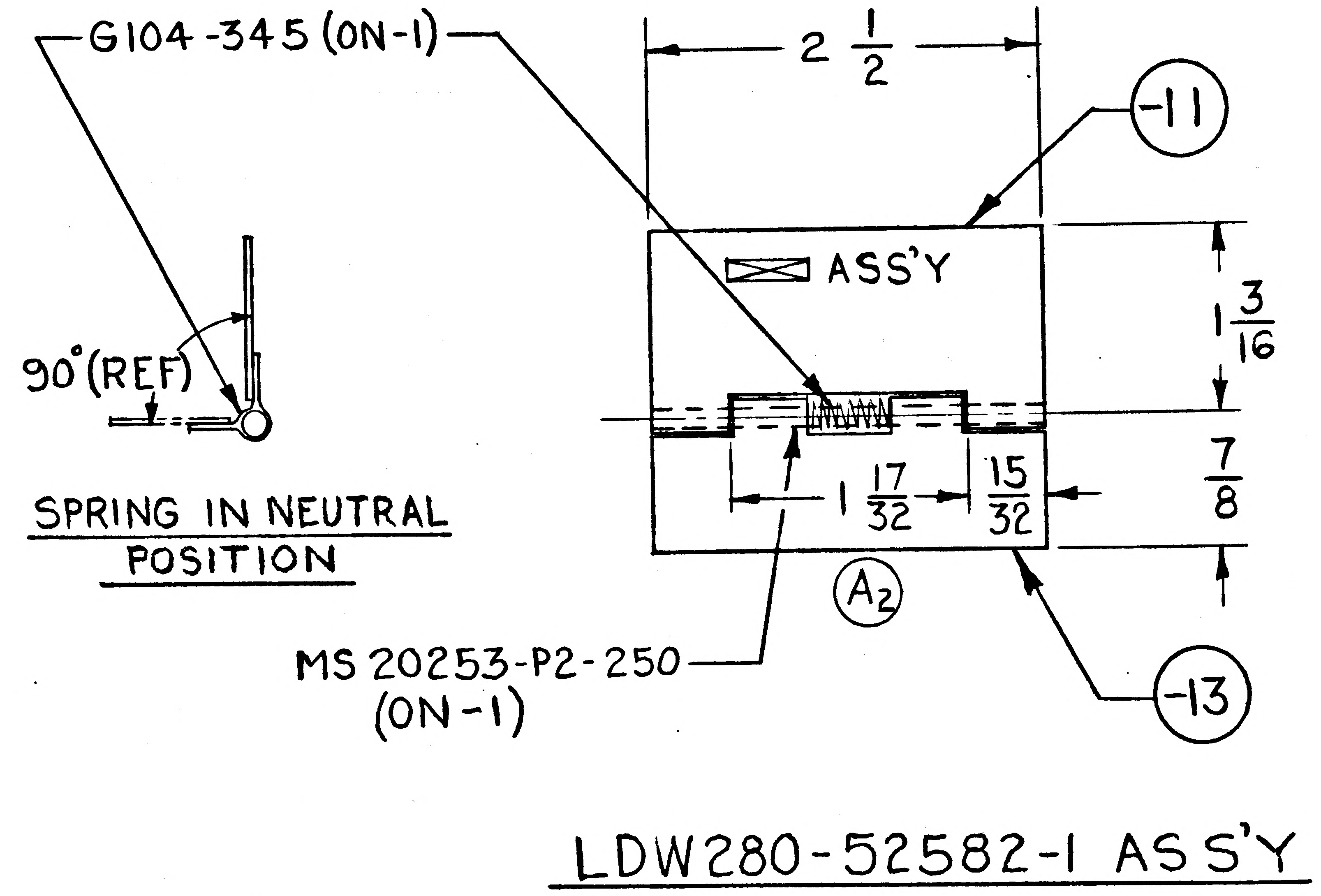

G104-345 (ON-1)
90° (REF)
SPRING IN NEUTRAL POSITION
2 1/2
-11
☒ ASS'Y
1 3/16
7/8
1 17/32
15/32
A2
-13
MS 20253-P2-250 (ON-1)

LDW280-52582-1 ASS'Y

GRUMMAN AIRCRAFT ENGRG CORP., BETHPAGE, L. I., NEW YORK			
SIZE B	CODE IDENT NO. 26512	LDW280-52582	A
SCALE FULL		SHEET 3.00	

ENG 72.1 6-64

01

NAS 9-1100

ENG 32.1 REV 3-65

GRUMMAN AIRCRAFT ENGINEERING CORP.
CODE IDENT NO. 26512
ENGINEERING ORDER

DWG. NO. LDW280-52582	EO NO. A1
CONTROL INFO NO. LDW280A4125	

CREATE LDW280-52582-1,-11&-13 AS SHOWN BELOW

-1 EFF LM-2(32) THRU LM-15(45) N/A LDW280-52674 2REQ/MOD

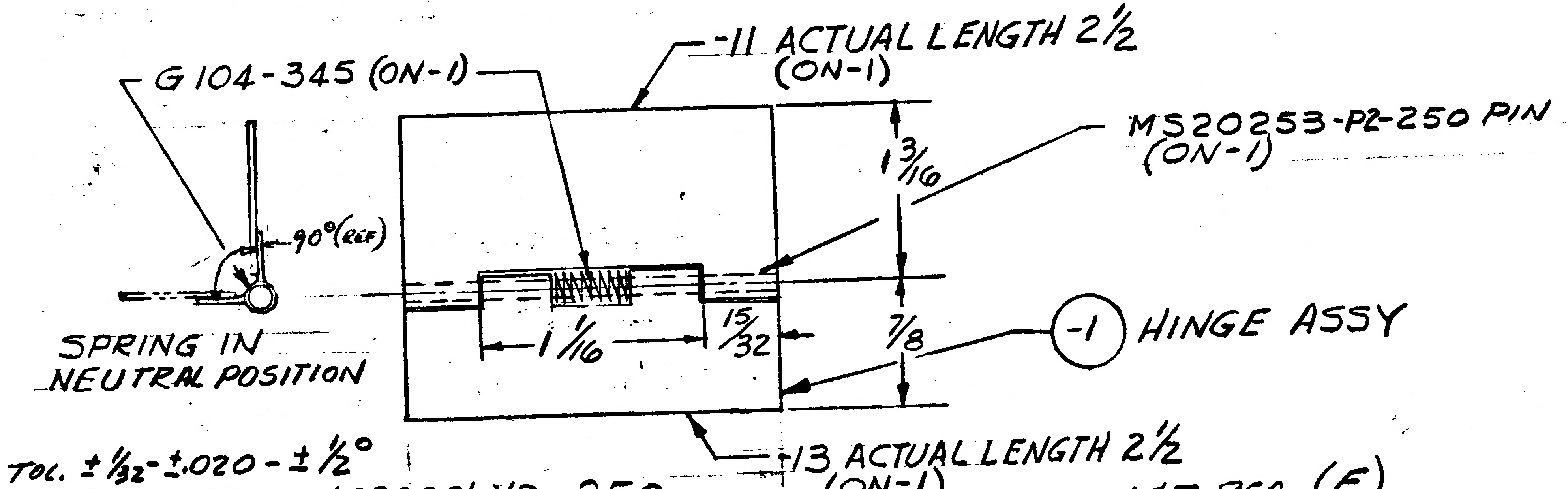

G104-345 (ON-1)
-11 ACTUAL LENGTH 2½ (ON-1)
MS20253-P2-250 PIN (ON-1)
1 3/16
90°(REF)
SPRING IN NEUTRAL POSITION
1 1/16
15/32
7/8
-1 HINGE ASSY
-13 ACTUAL LENGTH 2½ (ON-1)

TOL. ±1/32-±.020-±½°
MAKE-11 FROM MS20001-Y9-250
MAKE -13 FROM MS20001-X9-250

1ST REQ. (E)

* DRAWING NOT MADE

2

DETAIL SPEC REQ		CL II ENGRG CHG		CL I ENGRG CHG	

REASON FOR EO: TO SUPPORT SEQ THERMAL DOOR

DESCRIPTION OF EO: EO A1 INITIAL DRAWING RELEASE. PARTS MADE PER EO

GAEC EO RELEASE: 12/8/6

MODEL	PROCURING ACTIVITY NO.	GAEC UNIT NO.	SUB CONTR UNIT NO.
LM		LM-2(32) THRU LM-15(45)	

DRAWING CHANGE REQD: REVISE DWG	RECORD EO	DISPOSITION OF PARTS: REWORK	SCRAP	APPROVED BY		SUPPORT	RELIAB. GROUP	GROUP LEADER	STRESS GROUP	LIAISON ENGRG	PROJ ENGRG	
*		NOT REQ'D		DATE 5	12/7/66 VD1			12/7/66	12/7		12-8-66	12/8/66

PRIORITY	DRAWING TITLE	DRAWING NO.	EO NO.
C	HINGE ASSY D/S QUAD II SEQ SPT ACCESS FLAP	LDW280-52582	A1

CDR = 12/7/66

ISSUED BY R. CLARK / J STRAKOSCH X1153 SECTION VD1 GROUP NO. 335 PL 35

01

NAS 9-1100

A

ENG 32.1 REV 3-65

GRUMMAN AIRCRAFT ENGINEERING CORP.
CODE IDENT NO. 26512
ENGINEERING ORDER EMF-A

DWG. NO. LDW280-52582	EO NO. B1
CONTROL INFO NO. LDW280A6388	

ON LDW280-52582:

ADD -15 PIN IDENTICAL TO MS20253-P2-250 EXCEPT
FINISH PER LSP 14-10300 TYPE I

FOR -15, 2 REQ'D PER VEHICLE
AND N/A IS LDW280-52582-1 ASSY.
ON -11 ADD FINISH PER LSP 14-10300 TYPE I

-15 MAY BE MADE BY REWORKING MS20253-P2-250

DETAIL SPEC REQ	☐	CL II ENGRG CHG	☑	CL I ENGRG CHG	☐	LCD19-1197 2.

REASON FOR EO	DESCRIPTION OF EO	Ⓡ GAEC EO RELEASE C
FINISH REQ'D LCD#1197	ADDED -15 ADDED FINISH ON -11	JK 4/28/7

MODEL	EFFECTIVITY		
	PROCURING ACTIVITY NO.	GAEC UNIT NO.	SUB CONTR UNIT NO.
LM	LM-2	(32) THRU	LM-15 (45)

DRAWING CHANGE REQD		DISPOSITION OF PARTS		APPROVED BY								
				DATE	4/18/67			4/18/67	4/20/67		4/25/67	4 28 67
✓ REVISE DWG	RECORD EO	✓ REWORK	SCRAP	5	VD1	SUPPORT	RELIAB. GROUP	GROUP LEADER	STRESS GROUP	LIAISON ENGRG	PROJ ENGRG	~~GOVT~~

PRIORITY	DRAWING TITLE	DRAWING NO.	EO NO.
C	HINGE ASSY - DESCENT STAGE QUAD II SEQ SUP'T ACCESS FLAP	LDW280-52582	B1

ISSUED BY MARZELLA SECTION VEHICLE DESIGN & INT GROUP NO. 335 PL 25

01 NAS 9-1100

B

ENG 32.1 REV 3-65

GRUMMAN AIRCRAFT ENGINEERING CORP.
CODE IDENT NO. 26512
ENGINEERING ORDER

DWG. NO. LDW280-52582
EO NO. B2
CONTROL INFO NO. LM-5-13559

TRIM -11 AS SHOWN IN SHADED AREA

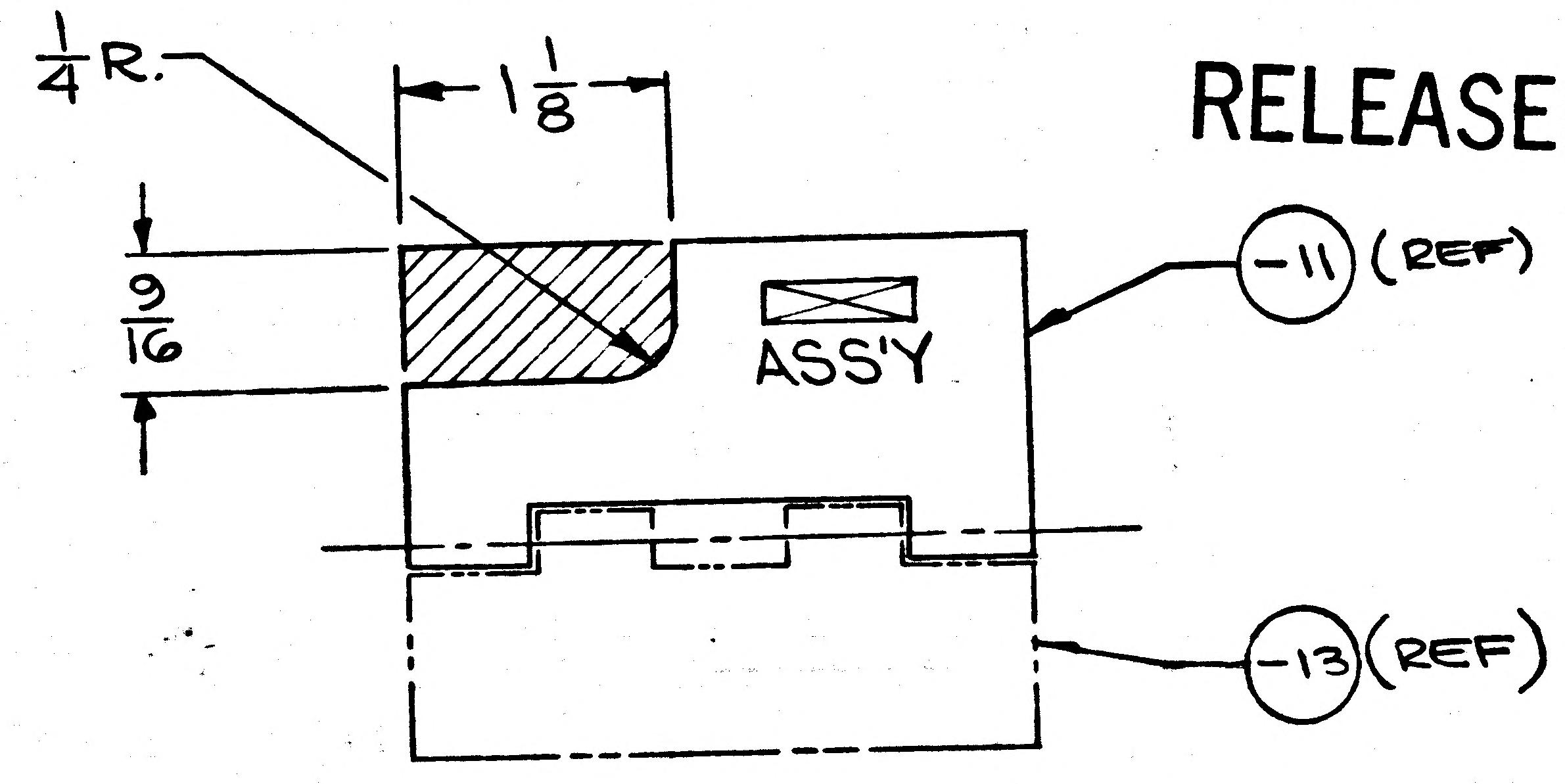

LDW280-52582-1 ASSY

RELEASED BY LIAISON

DETAIL SPEC REQ	☐	CL II ENGRG CHG	☑	CL I ENGRG CHG	☐	5

REASON FOR EO: TRIM REQ'D DUE TO STRUCTURAL INTERFERANCE

DESCRIPTION OF EO: TRIMMED -11

GAEC EO RELEASE: C

MODEL	PROCURING ACTIVITY NO.	GAEC UNIT NO.	SUB CONTR UNIT NO.
LM		LM-2 (32)	
		THRU	
		LM-15 (45)	

DRAWING CHANGE REQD		DISPOSITION OF PARTS									
REVISE DWG	RECORD EO	REWORK	SCRAP			SUPPORT	RELIAB. GROUP	GROUP LEADER	STRESS GROUP	LIAISON ENGRG	PROJ ENGRG
✓		✓		APPROVED BY	Jaf			—	JFJ	CH	JWB
				DATE	7/21/67			—	7-26-67	7-5-67	7/21/67
					VDI						

PRIORITY: C

DRAWING TITLE: HINGE ASS'Y ~ D/S ~ QUAD II ~ S.E.B. ~ SUPPORT ACCESS DOOR

DRAWING NO.: LDW280-52582

EO NO.: B2

ISSUED BY LIAISON D. RAGAS / X1153 SECTION VD1 GROUP NO. 335 PL 25

01

NAS 9-1100

ENG 32.2 REV 3-65

GRUMMAN AIRCRAFT ENGINEERING CORP.
CODE IDENT NO. 26512
ENGINEERING ORDER

DWG. NO. LE0280 EO NO. 784
CONTROL INFO NO. LDW280B0091

ON DASH NOS. NOTED * WITH N/A NOTED ** REMOVE LM4(34) THRU LM15(45) EFFECTIVITY REQMTS FROM THE FOLLOWING DRAWINGS.

DWG NO LDW280	DASH NO.*	TITLE	N/A NO. ** LDW280	CHG NO.
52648	-13	DOOR INSTL D/S QUAD II SEQ ACCESS	54553	B8
52768	-3-5	FOIL ASSY D/S QUAD II SEQ PLUME IMPINGE	52767	B3
52769	-11	SKIN ASSY D/S QUAD II SEQ PLUME IMPINGE	52767	B1
52744	-25-27	SKIN ASSY D/S QUAD II SEQ PLU IMP SHIELD	52742	A6
18130	-15-17	ZEE QUAD III UPR PLUME IMP. SHIELD	52744	A9
52743	-15-17	FOIL ASSY D/S QUAD II PLUME IMP SHIELD UPR DK	52742	A3
52741	-3	SKIN ASSY D/S QUAD II PLUME IMP SHIELD SIDE FIXED	52739	A2
18125	-19-21	ZEE D/S QUAD II AMBIENT HE ACCESS PLM IMP SHLD	52743	B2
52740	-1	FOIL ASSY D/S QUAD II PLME IMP SHIELD SIDE FIXED	52739	A3
52837	-3	FRAME ASSY D/S QUAD II SEQ ACCESS DOOR	52648	A7
P18174	-1-3	BLANKET ASSY D/S QUAD II SEQ ACCESS COVER	52648	A1
52767	-1	SHIELD ASSY D/S QUAD II SEQ A/D PLM IMP	52648	B4
18221	-17 -11	ANGLE D/S SEQ ACCESS DOOR	52837 52665	A5
P17537	-31-33-35-37-39-41-47 -27-29	FRAME ASSY D/S SEQ THERMAL SHIELD ACCESS DR	52837 52674	A6
P18170	-15-17-19	LINK D/S SEQ ACCESS DOOR	52837	B2
P18172	-11-13 -11-15-17-18	TUBES D/S QUAD II SEQ A/D & JAMB L.H. VERT	52837 52674	A3
P18173	-11-15 -13-15	TUBE D/S QUAD II SEQ A/D L.H. LWR.	52837 52674	A4
P18214	-11-13-15-19-21-23	TUBE D/S QUAD II SEQ A/D LH UPR	52837	A4
P18215	-11-13-15-17-19	PLATE D/S QUAD II SEQ A/D-YOKE	52837	A2
P18216	-11-13-15-17-19-21	PLATE D/S QUAD II SEQ A/D-YOKE	52837	A2
P18217	-11-13-15-17-19	TEE D/S SEQ ACCESS DOOR STRAP SPT	52837	B1
P18218	-11-13-15-17 -19	ANGLES D/S QUAD II SEQ A/D STRAP SPT	52837 52665	B2
P18181	-11-13-15-17-19 -13-19	TUBE D/S QUAD II SEQ A/D R.H. UPR	52837 52674	A1
P18180	-11-13-15-16-17-19	TUBE D/S QUAD II SEQ A/D	52674	A1
P18213	-11 -13-15-17	CLAMP D/S QUAD II SEQ ACCESS JAMB LH LWR	52674 52665	A3
P18176	-23-25	BLANKET ASSY D/S QUAD II SEQ UPR & SIDE PNL	52665	A6
P17581	-3-7	BLANKET ASSY D/S QUAD II VERT	52665	A4
P17575	-13	WASHER D/S THERMAL SHIELD LWR DK STD OFF	52665	B4
52582	-1-15	HINGE ASSY D/S QUAD II SEQ SPT ACCESS FLAP	52674	B3
52674	-1-3	JAMB ASSY D/S QUAD II SEQ ACCESS DOOR	52665	A4
52739	-3	SHIELD ASSY D/S QUAD II PLNE IMP. SIDE THERM.	52665	A3
52742	-9-11	SHIELD ASSY D/S QUAD II IMP SHIELD UPR DK	52665	A9

DETAIL SPEC REQ ☐	CL II ENGRG CHG ☐	CL I ENGRG CHG ☑	LCD 1433 CCA 586

REASON FOR EO: ALSEP REDESIGN

DESCRIPTION OF EO: ON -* REMOVED LM-4-15 REQMTS FOR N/A LDW 280-**.

GAEC EO RELEASE: SK 11/1/67

MODEL	PROCURING ACTIVITY NO.	GAEC UNIT NO.	SUB CONTR UNIT NO.
LM		LM4(34)	
		THRU	
LM		LM15(45)	

DRAWING CHANGE REQD: REVISE DWG ✓ RECORD EO
DISPOSITION OF PARTS: REWORK SCRAP ✓
APPROVED BY: JRL
DATE: 10/27/67
P VD1
GROUP LEADER: 10-27-67
STRESS GROUP: 10/30/67
PROJ ENGRG: 10/30/67
11-1-67
PRIORITY: C
DRAWING TITLE: NOTED
DRAWING NO.: LEO 280
EO NO.: 784

11-10
ISSUED BY: PLANTE 1156 SECTION: VD1 GROUP NO. 335 PL 25

01
NAS 9-1100

ENG 32.1 REV 3-65

GRUMMAN AIRCRAFT ENGINEERING CORP.
CODE IDENT NO. 26512
ENGINEERING ORDER

DWG. NO. LDW 280 - 52582
EO NO. B4
CONTROL INFO NO. LM5-1400S

THIS IS A REV OF EO B2

ADD - 11-1 IDENTICAL TO -11 EXCEPT AS NOTED.

ADD -1-1 ASSY

(-1-1 ASSY - IS IDENT TO -1 EXCEPT - 11-1 REPLACE -11)

IN MOD BLK ADD -1-1 N/A LDW280-52674 LM2, LM3 1 REQD

(FOR -1) REVISE QTY 1 REQD WAS 2 REQD

DETAIL SPEC REQ ☐ CL II ENGRG CHG ☑ CL I ENGRG CHG ☐

(5)

REASON FOR EO: PART WAS NOT REIDENTIFIED FOR NEW TRIM

DESCRIPTION OF EO: ADDED -1-1 ASSY. & REF EO B2 -11-1, WAS TRIMMED -11. IN MOD BLK. FOR -1 REVISED QTY 1 REQD WAS 2 REQD

GAEC EO RELEASE: VC

MODEL	EFFECTIVITY: PROCURING ACTIVITY NO.	GAEC UNIT NO.	SUB CONTR UNIT NO.
LM		LM 2 (32)	
LM		LM 3 (33)	

DRAWING CHANGE REQD: REVISE DWG ☑ RECORD EO ☐
DISPOSITION OF PARTS: REWORK ☑ SCRAP ☐

	VDI	SUPPORT	RELIAB. GROUP	GROUP LEADER	STRESS GROUP	LIAISON ENGRG	PROJ ENGRG
APPROVED BY	JAP			—	JF	CH	
DATE	6/12/68			—	6-10-68	61068	6/10/68

PRIORITY: C
DRAWING TITLE: HINGE ASSY D/S-SEQ B, SUPT ACCESS DOOR
DRAWING NO.: LDW280-52582
EO NO.: B4

ISSUED BY: DON RAGAS x1153 SECTION: VDI GROUP NO. 280 PL 5

01 NAS 9-1100

REVISIONS

CHANGE LTR	ITEM NO.	SHEET NO.	ZONE	GRUMMAN INFO ONLY	DET SPEC	CLASS I	CLASS II	ENGRG ORDER	DESCRIPTION	EFFECTIVITY	DISPOSITION OF EXISTING PARTS		CHANGED BY AND DATE	ENGRG APPD	GOVT APPD
											REWORK	SCRAP			
A	1	7.00	40A				✓	EO A1	EO A1 INITIAL DRAWING RELEASE- PARTS MADE PER EO.	LM-2 (32) LM-3 (33)	✓		A. LITVINOFF 2-28-67		
	2	6.00	27C				✓	EO A2	REMOVED LDW280-17922-13, NAS 697-A3. NAS1097 AD3(2) & MS20470-AD4(4) ADDED LDW280-17922-15 LDW280P17960-11 NAS 697-A3, NAS1097-AD3(2) MS 20426-AD4 MS20470AD 4(2) & MS20470-A4(6)						
	3	6.00	29C				✓	EO A3	ADDED LDW280-17780-11-13&-17 LDW280 P17960-13 MS20470 AD4(12) MS20470A4(6) NAS1068-A3(5) & NAS1097-AD3(10)						
	4	7.00	38A				✓	EO A4	ADDED NAS 697-A3 & NAS1097-AD3(2)						
	5	5.00	18A 20C				✓	EO A5	REMOVED LDW280-17421-11(2) -13(2) -15&-18 ADDED LDW280-17989-11(2) -13(2) -15&-12 RESPECTIVELY						
B	1	7.00	38A				✓	EO B1	ADDED LDW 280-17958-15 & GR 500A-4 E(2)						
	2	7.00	36A 38A				✓	EO B2	ADDED LDW 280-17958-13&-15(2) LDW280-17984-11, GG10A-12-1(2), GG10A-12-2, MS20470 AD4(9)						
	3	7.00	35A				✓	EO B3	ADDED TO FIELD & B/M: NAS 697-A3(3) NAS1097-AD3(6) DRILL # 11 (.191-.196)						
	4	6.00	31C				✓	EO B4	IN FIELD (SH6) LDW280-17425-19 WAS LDW280-17425-17						
	5	5.00	20A 22A 24A				✓	EO B5	FOR-1 REMOVED LDW280-17423-11-13. NAS697 A3 8. NAS 1097AD3(16) MS20470 AD4(12). ADDED .190-.196 (DRILL #11) (6 HOLES) LDW280-17985-11, NAS 697 A3(6) NAS1097AD3 (12) MS20470 AD4(9) RELOCATED LDW280-17422-13-15						
C	1	4.00 7.00	15A 35A				✓	EO C1	DETAIL "AA" REMOVED NAS 697A06L(4) ADDED NAS697A06L (2) & HOLE PATTERN TO MATCH LSC 360-624. DETAIL "AK" REMOVED LDW 280-17902-11 (1) & NAS1068A06L(4) ADDED LDW280-17902-13 (1) NAS697A06L(2) & CORRESPONDING HOLE PATTERN TO MATCH LSC 360-624						
	2	7.00	34A				✓	EO C2	REMOVED LDW280-17905-11-15-17&-19, NAS1068-A3(2) NAS1097-AD3(4) & MS20470-AD4(11) ADDED LDW280-17905-21, NAS1068-A3(2), NAS 1097-AD4(2) & MS20470-DD4(6)						

LTR	GROUP LDW	VEH DES INT	STRUCTURES	STRUCTURES	WEIGHTS	RELIABILITY
E						

FOR CONTINUATION OF REVISIONS SEE SHEET 1.11

GRUMMAN AIRCRAFT ENGRG CORP, BETHPAGE, L. I., NEW YORK

SIZE	CODE IDENT NO.		
B	26512	LDW280-52587	E
SCALE NONE			SHEET 1.10

ENG 77.3 5-65

01

NAS 9-1100

REVISIONS

CHANGE LTR	ITEM NO.	SHEET NO.	ZONE	GRUMMAN INFO ONLY	DET SPEC	CLASS I	CLASS II	ENGRG ORDER	DESCRIPTION	EFFECTIVITY	DISPOSITION OF EXISTING PARTS: REWORK	DISPOSITION OF EXISTING PARTS: SCRAP	CHANGED BY AND DATE	ENGRG APPD	GOVT APPD
C	3	7.00	38A				✓	EO C3	REF EO A1 ADDED GF510C-5(2) QTY OF GR500A-4E(1) WAS(3)	LM-2 (32) LM-3(33)	✓		A. LITVINOFF 2-28-67		
	4	11.00	4A 4H				✓	EO C4	ON-1 IN F/D ADDED MS20470AD5(5) RIVET CALLOUTS (2 PLACES)						
	5	6.00	31C				✓	EO C5	ON-1 IN FLD: 2 3/16 REPLACED 4 7/16 DIM IN SECT K-K						
D	1	7.00	38A				✓	EO D1	IN FLD & B/M GF510C-5-2(2) REPLACED GR500A-4E(2)						
	2	8.00	43C				✓	EO D2	IN FLD & B/M ADDED: NAS697C08(3) NAS 1097-AD3(6) DRILLED #19(3) 4", 10", & 22" DIM						
	3		15A				✓	EO D3	ON-1 IN F/D & B/M .204-.210 DIA. WAS .195-.201 NAS1068A3 (3) WAS NAS697A3(3)						
	4	5.00 9.00 10.00	23D 52A 59C				✓	EO D4	IN F/D & B/M ADDED DRILL No#19 (7) NAS697C08(7) NAS1097AD3 (4) 1" DIA HOLE (3) DRILL NO#19(3) ADDED DETAIL "BM"						
	5	8.00	48A				✓	EO D5	IN F/D & B/M FOR-1 INSTL LDW280-17871-15 WAS LDW280-17871-11; LDW280-17871-17 WAS LDW280-17871-13; LDW280-17871-18 WAS LDW280-17871-14						
	6	7.00	35A				✓	EO D6	REFERENCE EO B3 FOR-1 ADDED TO FLD & B/M NAS697-A3(1) WAS(3) NAS1097-AD3(2) WAS(6) ADDED 13305 3-116						
	7	6.00	27C				✓	EO D7	REMOVED LDW280-17922-13, NAS697A3, NAS1097AD3 (2) & MS20470AD4(4). ADDED LDW280P17960-11 & MS20470A4(6) REF EO A2						
	8	8.00	44A 46C 48D				✓	EO D8	FOR-1 IN FLD & B/M, ADDED DR #19(.165-.171)(2 PLC'S) NAS697C08(2), NAS1097AD3(6), LDW280 17998-23(3) & MS20470AD4(6)						
	9	6.00 7.00 9.00 10.00	31C 38A 57A 59A				✓	EO D9	FOR-1 IN FLD & B/M, ADDED DRILL # 19 (.165-.171) 9PLACES, NAS697 C08(9) & NAS 1097AD3(18)						
	10	5.00 6.00 8.00 9.00	24A 31A 48D 57A				✓	EO D10	FOR-1, IN FLD & B/M DELETED DRILL #11 (3 PLC'S), NAS697A3 (3) & NAS1097AD3(6). ADDED DRILL #19 (2 PLC'S), NAS697C08 (3), NAS1097AD3(4), GB11D-6-76(1), GB11D-8-76(3) & MS20470 AD4(8)						

LTR	GROUP LDR	VEH DES INT	STRUCTURES	STRUCTURES	WEIGHTS	RELIABILITY					
E											

FOR CONTINUATION OF REVISIONS SEE SHEET 1.12

GRUMMAN AIRCRAFT ENGRG CORP, BETHPAGE, L. I., NEW YORK

SIZE	CODE IDENT NO.		
B	26512	LDW280-52587	E
SCALE NONE			SHEET 1.11

ENG 77.3 5-65

01

NAS 9-1100

53 52 51 50

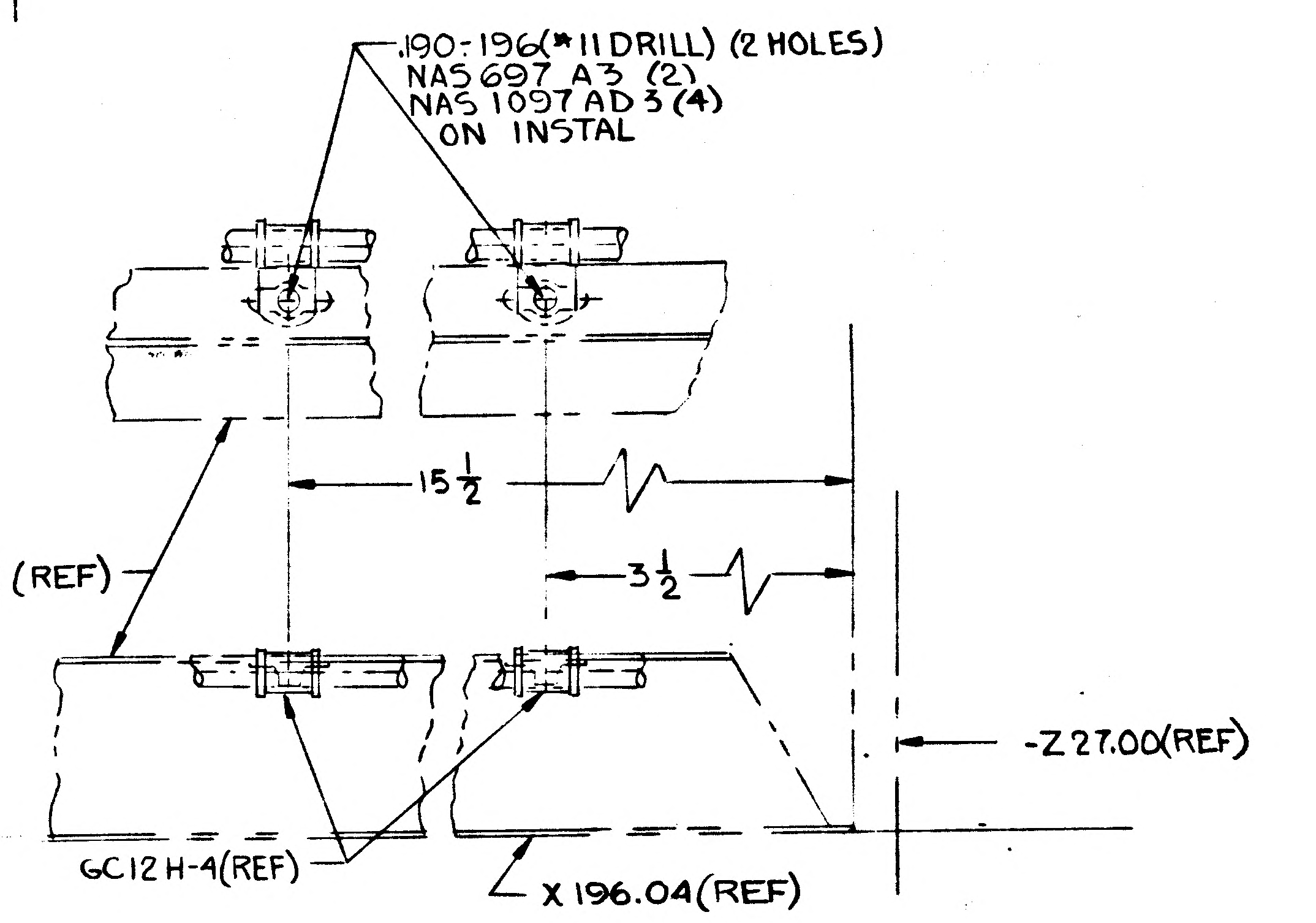

.190-.196(#11 DRILL) (2 HOLES)
NAS 697 A3 (2)
NAS 1097 AD3 (4)
ON INSTAL
15 1/2
3 1/2
LDW280-17431 (REF)
-Z 27.00(REF)
GC12H-4(REF)
X 196.04(REF)

DETAIL A Y
(ZONE 5A SH 3.00)
VIEW LOOKING INBD
NO SCALE

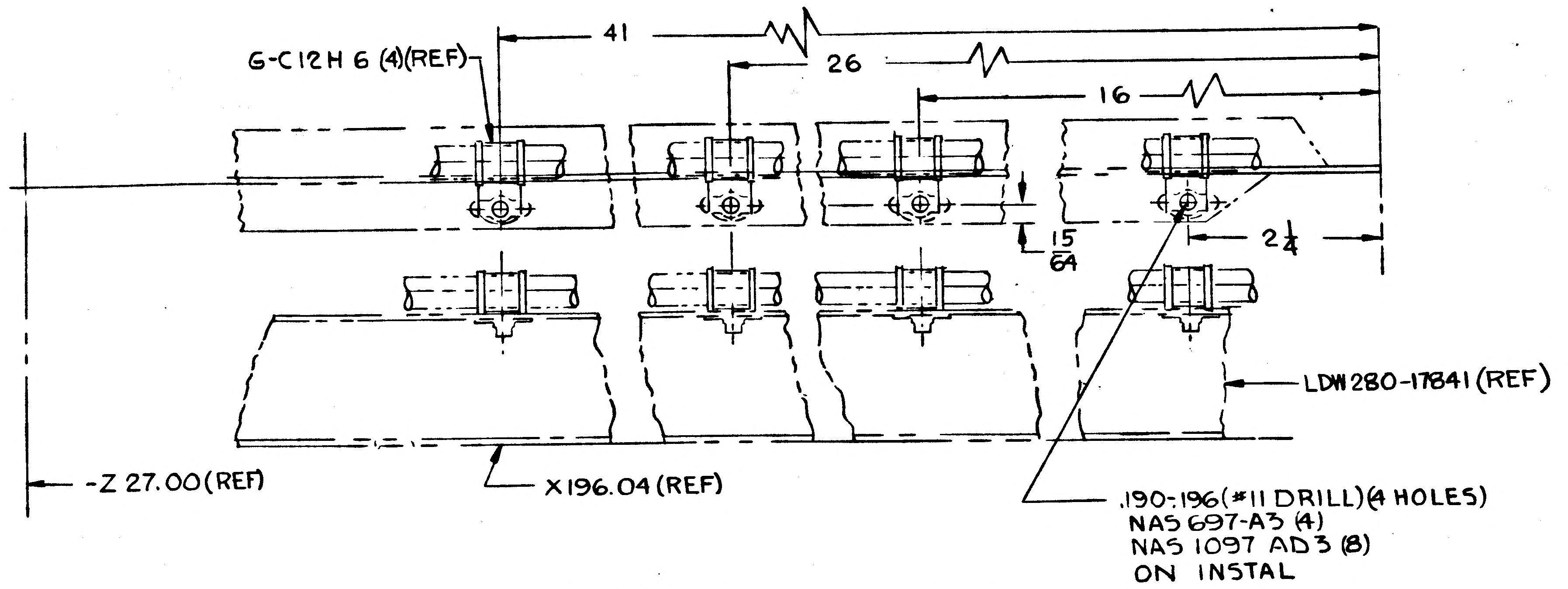

G-C12H 6 (4)(REF)
41
26
16
15/64
2 1/4
LDW280-17841 (REF)
-Z 27.00 (REF)
X196.04 (REF)
.190-.196(#11 DRILL)(4 HOLES)
NAS 697-A3 (4)
NAS 1097 AD3 (8)
ON INSTAL

DETAIL B B VIEW LOOKING INBD
(ZONE 6D SH 3.00)
NO SCALE

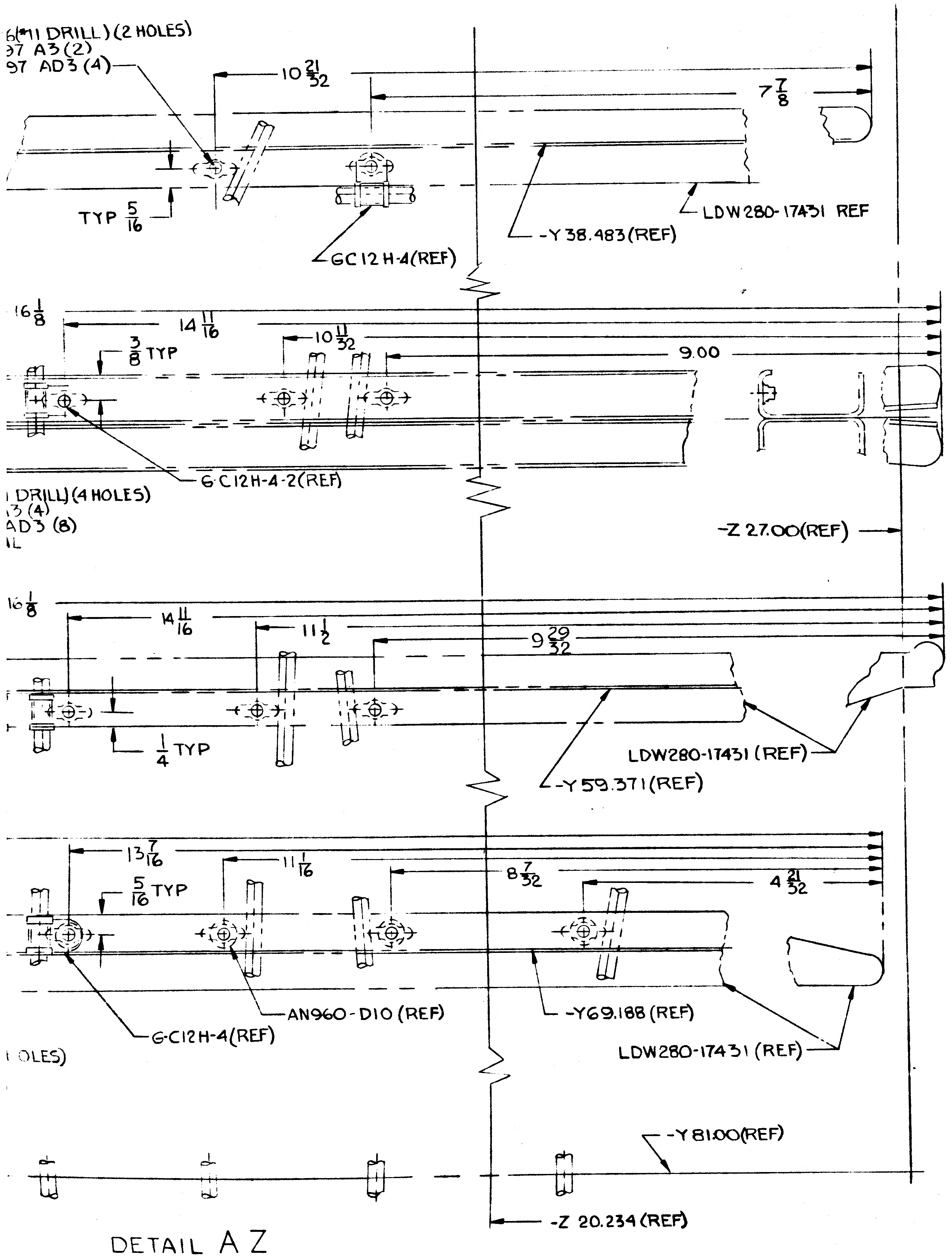

6(#11 DRILL) (2 HOLES)
97 A3 (2)
97 AD3 (4)
10 21/32
7 7/8
TYP 5/16
GC12H-4(REF)
-Y 38.483 (REF)
LDW280-17431 REF
16 1/8
14 11/16
10 11/32
3/8 TYP
9.00
6 C12H-4-2 (REF)
1 DRILL) (4 HOLES)
3 (4)
AD3 (8)
L
-Z 27.00 (REF)
16 1/8
14 11/16
11 1/2
9 29/32
1/4 TYP
LDW280-17431 (REF)
-Y 59.371 (REF)
13 7/16
11 1/16
8 7/32
4 21/32
5/16 TYP
G-C12H-4(REF)
AN960-D10 (REF)
-Y69.188 (REF)
LDW280-17431 (REF)
OLES)
-Y 81.00 (REF)
-Z 20.234 (REF)

DETAIL A Z
(ZONE 6B SH 3.00)
NO SCALE

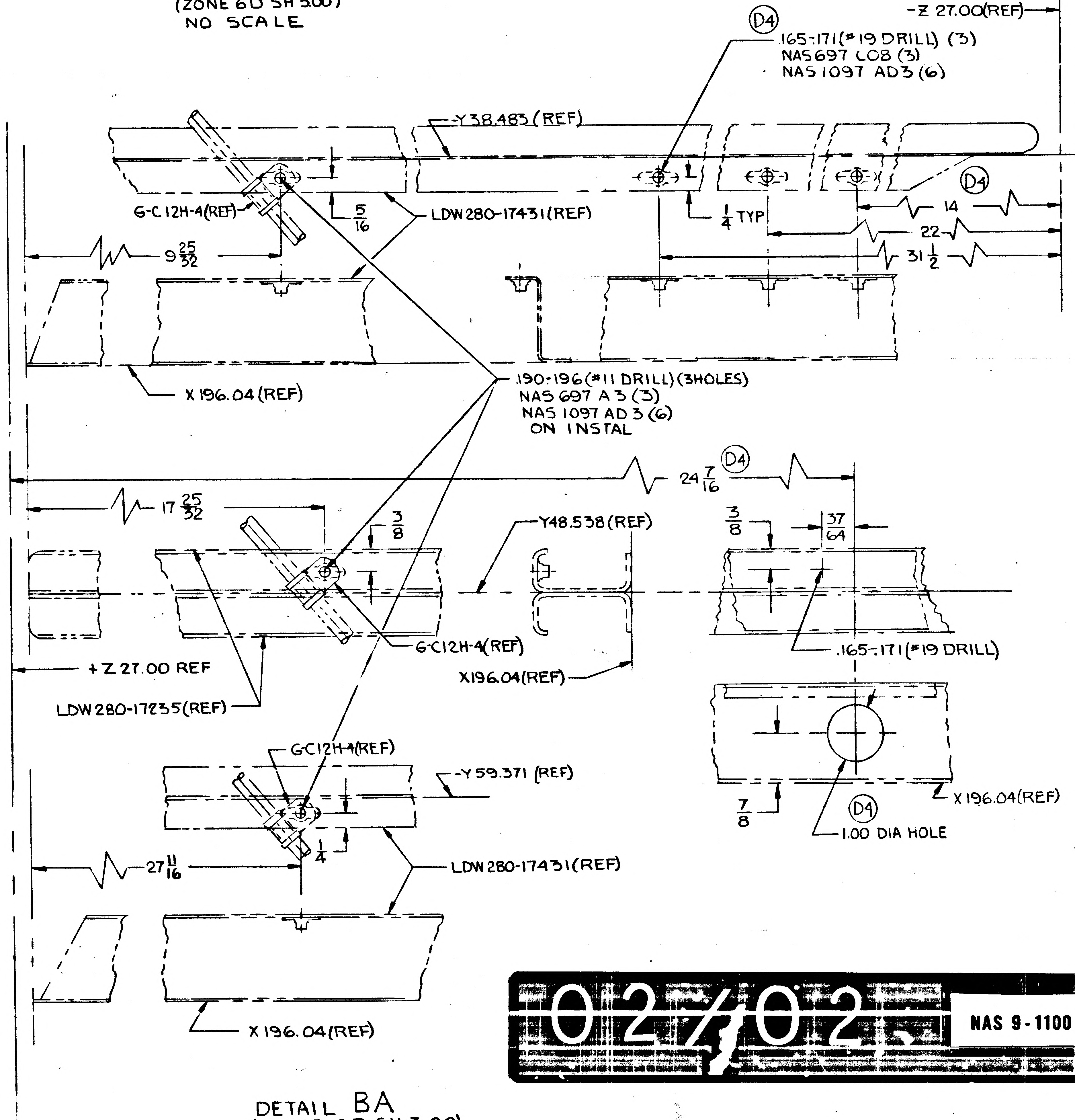

D4
.165-.171(#19 DRILL) (3)
NAS697 C08 (3)
NAS 1097 AD3 (6)
-Z 27.00(REF)
-Y38.483 (REF)
G-C12H-4(REF)
5/16
LDW280-17431 (REF)
1/4 TYP
D4
14
22
31 1/2
9 25/32
X 196.04 (REF)
.190-.196 (#11 DRILL) (3HOLES)
NAS 697 A3 (3)
NAS 1097 AD3 (6)
ON INSTAL
D4
24 7/16
17 25/32
3/8
Y48.538 (REF)
3/8
37/64
G-C12H-4(REF)
+Z 27.00 REF
X196.04(REF)
.165-.171(#19 DRILL)
LDW280-17235 (REF)
GC12H-4(REF)
-Y 59.371 (REF)
1/4
27 11/16
LDW280-17431 (REF)
7/8
D4
1.00 DIA HOLE
X196.04 (REF)
X 196.04 (REF)

DETAIL BA
(ZONE 6B SH 3.00)
NO SCALE

02/02 NAS 9-1100

MANUFACTURING OPERATIONS
UNLESS OTHERWISE SPECIFIED
NOTES CHECKED ✓ APPLY TO THIS DWG.

PART NUMBER
AND ALL OTHER MARKINGS
IN REGION MARKED ☒
USE BOTH SIDES IF NECESSARY.

FILLET AND INSIDE CORNER
RADII TOLERANCES
.016R TO .062R ± .010
.063R TO .250R ± .015
OVER .250R ± .030

DEPTH SHOWN FOR TAPPED
HOLES IS FULL THDS. 2-3 IMP THDS.
BEYOND PERMISSIBLE.

EXTERNAL THREAD LENGTH
SHOWN INCLUDES
2 IMPERFECT THREADS MAX.

DO NOT CADMIUM PLATE & PAINT
HOLES OR SURFACES MARKED
WITH DOUBLE ASTERISK.

MISMATCH STEP OF ± .005
PERMISSIBLE DUE TO CHANGE
OF CUTTERS AT INSIDE
INTERSECTING SURFACES.

DIAMETERS MARKED
MUST BE CONCENTRIC WITHIN
FULL INDICATOR
READING

HOLES MUST BE KEPT FREE OF
CHROME PLATING SOLUTION.

ALL DIMENSIONS SHOWN TO BE MET
AFTER CADMIUM PLATING.
THICKNESS OF PLATE .0003 MIN.
TO .0005 MAX. MIN. THICKNESS TO
BE .0002 ON THREADED AREAS.
NO ALLOWANCE FOR PLATING IN
HOLES

125 SURFACE ROUGHNESS
INCLUDING REAMED HOLES
PER MIL-STD-10

200 FOR ALL DRILLED HOLES

REMOVE ALL BURRS.
BREAK ALL EDGES .015-.031

INSPECTION INFORMATION
MINIMUM PERMISSIBLE
AVERAGE EDGE DISTANCE
MARKED IS

SYMBOL ✓ DENOTES SURFACE
TO BE MACHINED

UNLESS OTHERWISE SPECIFIED
TOLERANCE ON FLANGES IS ± 1/32

LENGTHS OF AN, NAS & MS AL ALY
RIVETS SHORTER THAN 1 INCH ARE
NOT SPECIFIED.

TOLERANCE ON LOFTED
DELINEATIONS IS

DWG SIZE 34 X 86

PRINTING INFO ONLY
FULL SIZE SHEET AREA (36 X 88)= 22.0 SQ. FT.
1/2 SIZE SHEET AREA (1/4 OF FULL)= 5.5 SQ. FT.
PRINT TRIM LINE

D
C
LDW280-52587 E
B
LDW280-52587 E
A

	GRUMMAN AIRCRAFT ENGRG CORP., BETHPAGE, L. I., NEW YORK			
	SIZE J	CODE IDENT NO. 26512	LDW280-52587	E
LM MODEL OR END ITEM	SCALE NOTED		SHEET 9.00	

2 FRAMES

LDW280-52587	SH 9

53 52 51 50

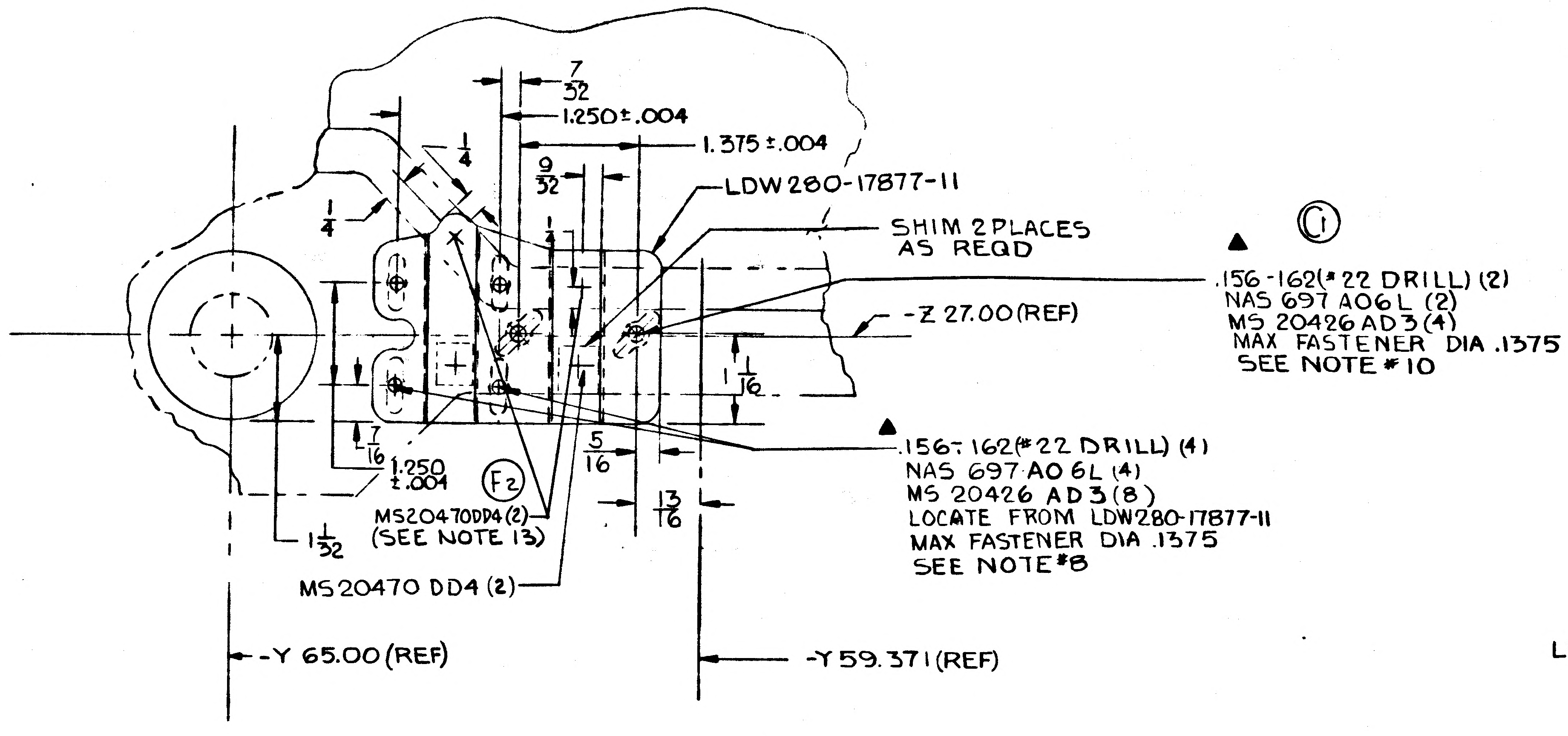

7/32
1.250±.004
1.375±.004
1/4
9/32
LDW280-17877-11
SHIM 2 PLACES AS REQD
1/4
C1
.156-.162(#22 DRILL) (2)
NAS 697 A06L (2)
MS 20426 AD3 (4)
MAX FASTENER DIA .1375
SEE NOTE #10
-Z 27.00(REF)
1 1/16
7/16
1.250 ±.004
F2
5/16
13/16
.156-.162(#22 DRILL) (4)
NAS 697 A0 6L (4)
MS 20426 AD3 (8)
LOCATE FROM LDW280-17877-11
MAX FASTENER DIA .1375
SEE NOTE #8
MS20470DD4(2)
(SEE NOTE 13)
1 1/32
MS20470 DD4 (2)
-Y 65.00(REF)
-Y 59.371(REF)

DETAIL AA-AA
(ZONE 5A SH 3.00)

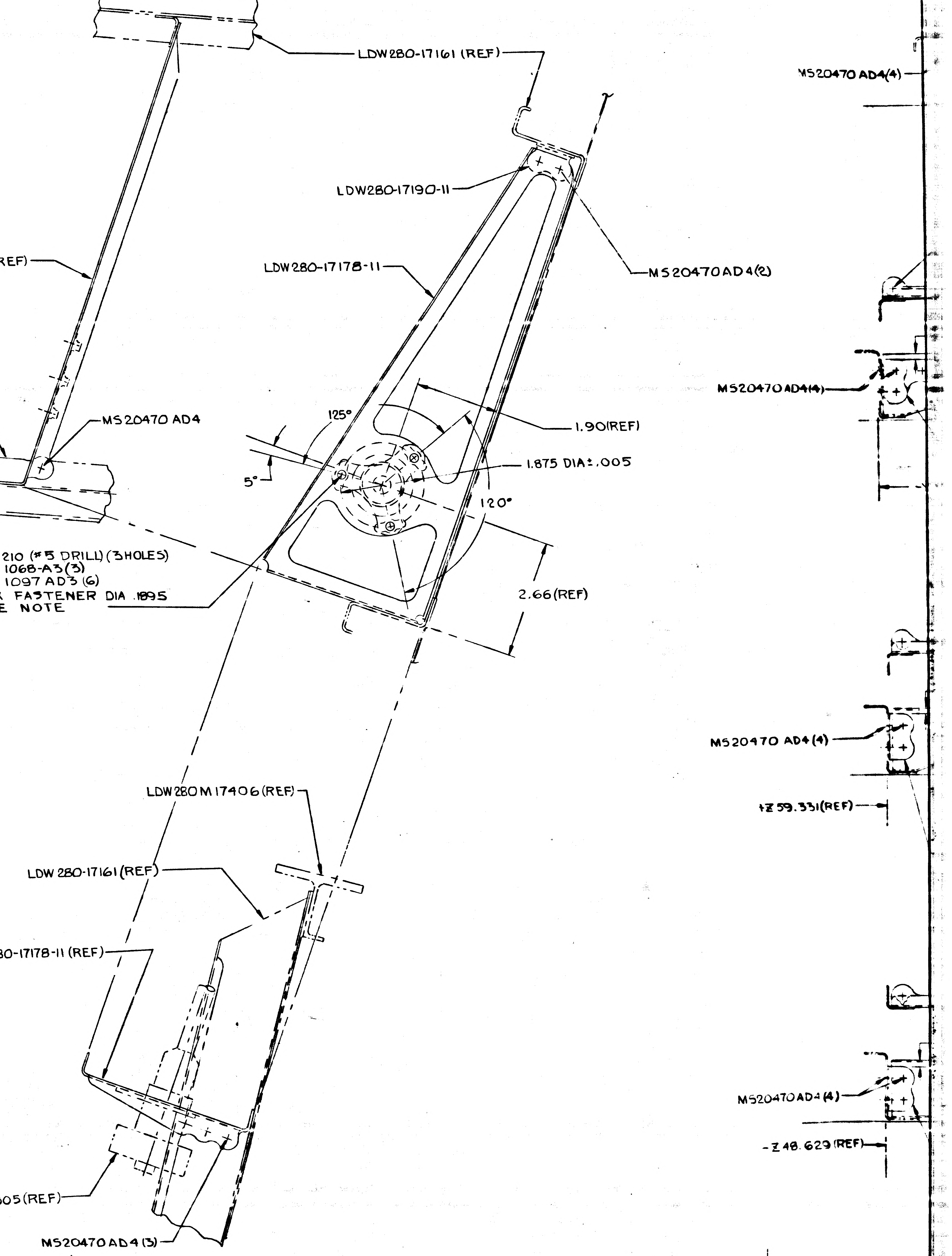

LDW280-17161 (REF)
MS20470 AD4(4)
LDW280-17190-11
MS20470AD4(2)
LDW280-17178-11 (REF)
LDW280-17178-11
LDW280-17161(REF)
MS20470 AD4
125°
1.90(REF)
5°
1.875 DIA±.005
120°
D3
.204-.210 (#5 DRILL) (3 HOLES)
NAS 1068-A3(3)
NAS 1097 AD3 (6)
MAX FASTENER DIA .1895
SEE NOTE
2.66(REF)
MS20470AD4(4)
MS20470 AD4(4)
+Z 59.331(REF)
LDW280M17406(REF)
LDW280-17161(REF)
LDW280-17178-11 (REF)
MS20470AD4(4)
-Z 48.629(REF)
LSC270-805(REF)
MS20470AD4(3)

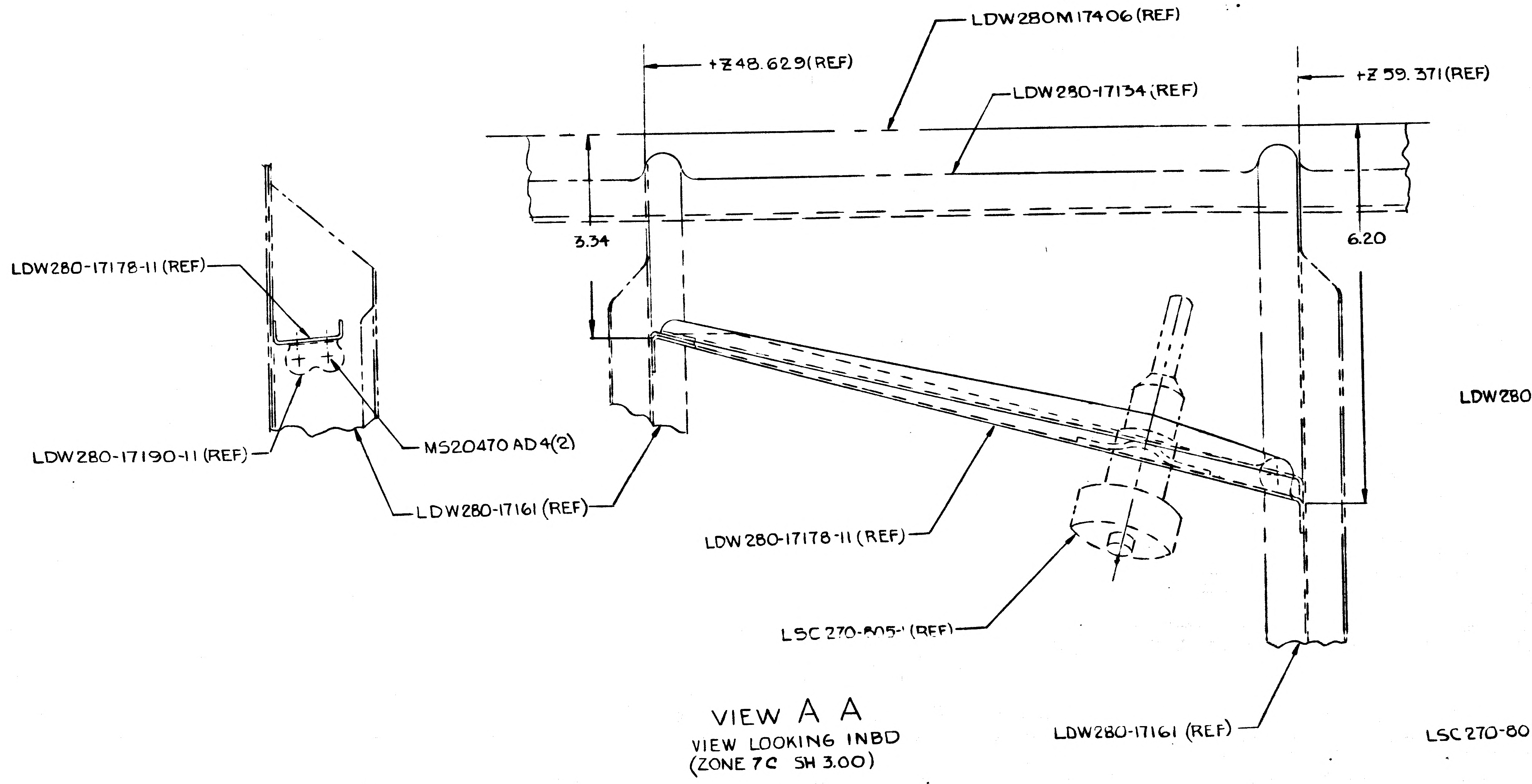

LDW280M17406(REF)
+Z 48.629(REF)
LDW280-17134(REF)
+Z 59.371(REF)
3.34
6.20
LDW280-17178-11(REF)
LDW280-17190-11 (REF)
MS20470 AD4(2)
LDW280-17161 (REF)
LDW280-17178-11 (REF)
LSC 270-805-1 (REF)
LDW280-17161 (REF)

VIEW A A
VIEW LOOKING INBD
(ZONE 7C SH 3.00)

LDW280-52587 SH 4

01702 NAS 9-1100

-MS20470AD4(2)

(REF)

005

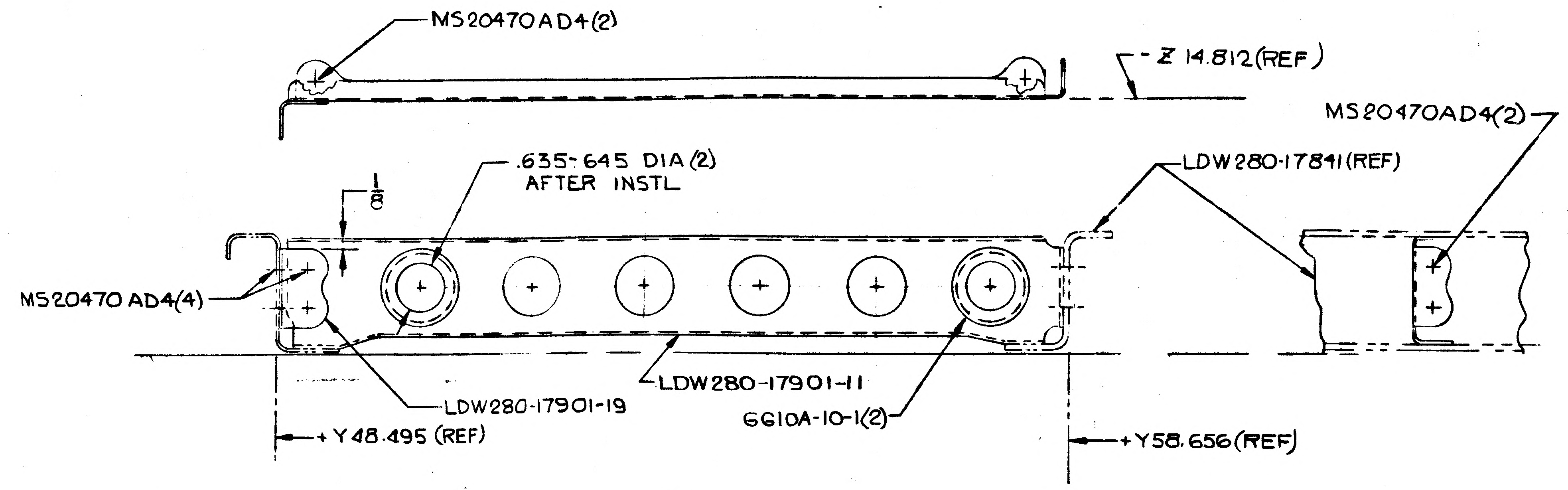
MS20470AD4(2)
-Z 14.812(REF)
MS20470AD4(2)
.635-.645 DIA(2)
AFTER INSTL
1/8
LDW280-17841(REF)
MS20470 AD4(4)
LDW280-17901-19
LDW280-17901-11
66I0A-10-1(2)
+Y48.495(REF)
+Y58.656(REF)

DETAIL B
(ZONE 5D SH 3.00)

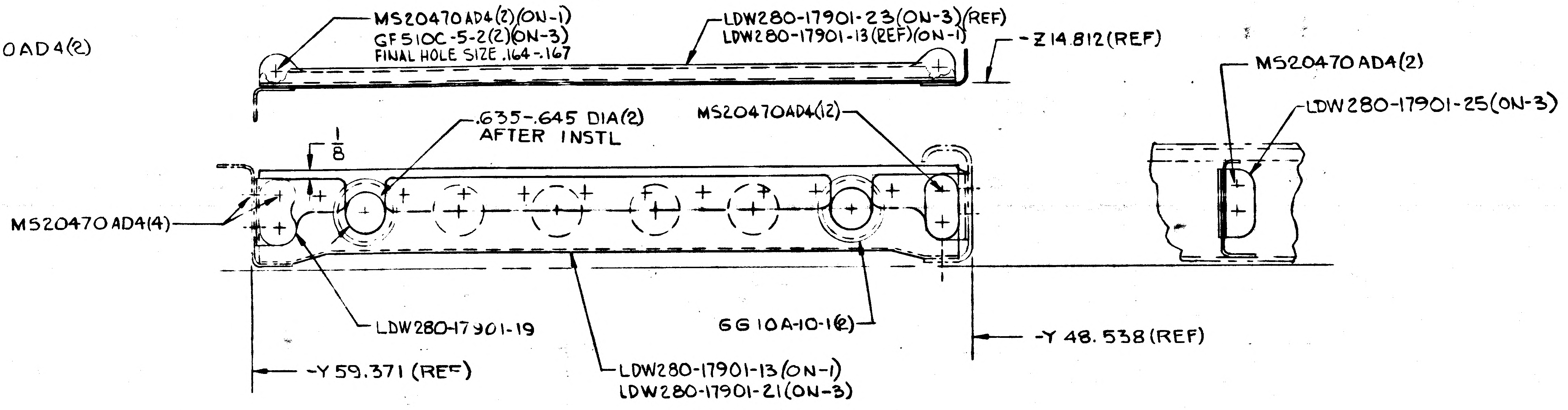
MS20470AD4(2)(ON-1)
GF510C-5-2(2)(ON-3)
FINAL HOLE SIZE .164-.167
LDW280-17901-23(ON-3)(REF)
LDW280-17901-13(REF)(ON-1)
-Z 14.812(REF)
MS20470 AD4(2)
LDW280-17901-25(ON-3)
.635-.645 DIA(2)
AFTER INSTL
MS20470AD4(2)
1/8
MS20470 AD4(4)
LDW280-17901-19
66 10A-10-1(2)
-Y 48.538(REF)
-Y 59.371(REF)
LDW280-17901-13(ON-1)
LDW280-17901-21(ON-3)

DETAIL D(ON-1) Ⓕ4
(ZONE 5A SH 3.00)

DETAIL CA (IDENT TO DETAIL D EXCEPT AS NOTED)
(ZONE 5A SH 3.00)(ON-3 ONLY)

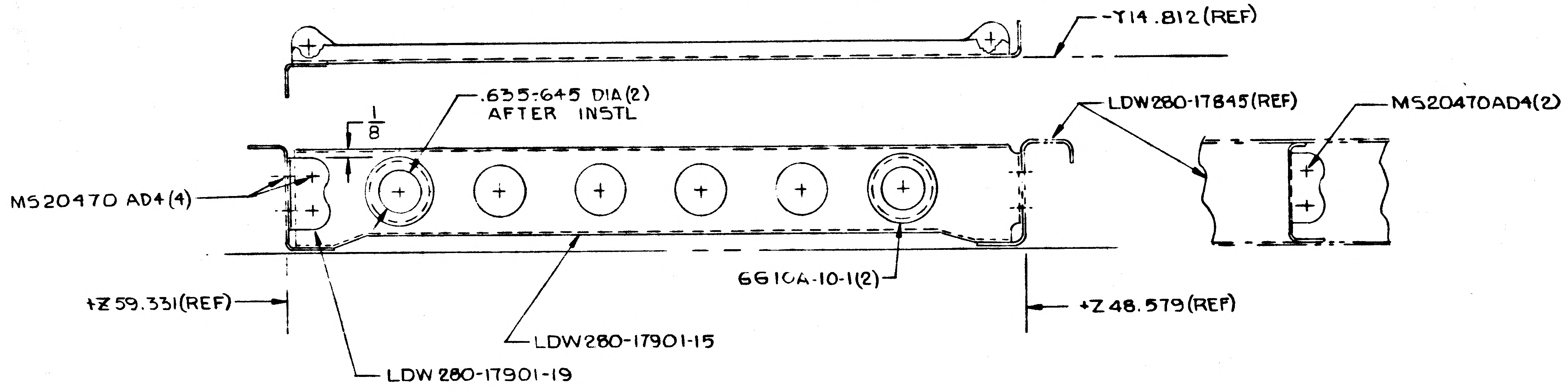
-Y14.812(REF)
.635-.645 DIA(2)
AFTER INSTL
1/8
LDW280-17845(REF)
MS20470AD4(2)
MS20470 AD4(4)
66I0A-10-1(2)
+Z59.331(REF)
+Z48.579(REF)
LDW280-17901-15
LDW 280-17901-19

DETAIL C
(ZONE SH 3.00)

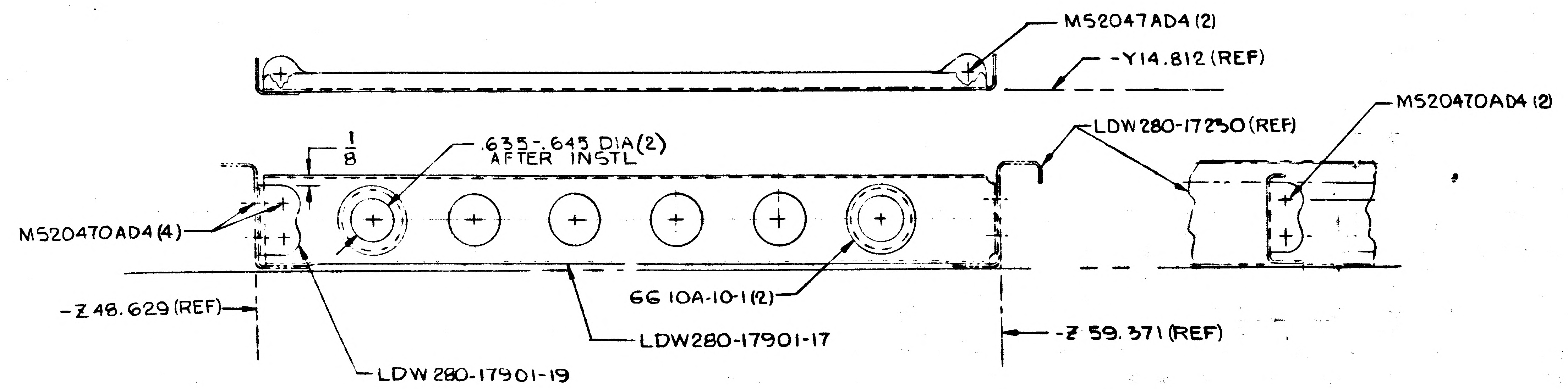
MS2047AD4(2)
-Y14.812(REF)
LDW280-17250(REF)
MS20470AD4(2)
1/8
.635-.645 DIA(2)
AFTER INSTL
MS20470AD4(4)
-Z 48.629(REF)
66 10A-10-1(2)
LDW280-17901-17
-Z 59.371(REF)
LDW 280-17901-19

DETAIL E
(ZONE 4B SH 3.00)

MANUFACTURING OPERATIONS
UNLESS OTHERWISE SPECIFIED
NOTES CHECKED √ APPLY TO THIS DWG.

PART NUMBER
AND ALL OTHER MARKINGS
IN REGION MARKED
USE BOTH SIDES IF NECESSARY.

FILLET AND INSIDE CORNER
RADII TOLERANCES
.016R TO .062R ± .010
.063R TO .250R ± .015
OVER .250R ± .030

DEPTH SHOWN FOR TAPPED HOLES IS FULL THDS. 2-3 IMP THDS. BEYOND PERMISSIBLE.

EXTERNAL THREAD LENGTH SHOWN INCLUDES 2 IMPERFECT THREADS MAX.

DO NOT CADMIUM PLATE & PAINT HOLES OR SURFACES MARKED WITH DOUBLE ASTERISK.

MISMATCH STEP OF ± .005 PERMISSIBLE DUE TO CHANGE OF CUTTERS AT INSIDE INTERSECTING SURFACES.

DIAMETERS MARKED
MUST BE CONCENTRIC WITHIN
FULL INDICATOR
READING

HOLES MUST BE KEPT FREE OF CHROME PLATING SOLUTION.

ALL DIMENSIONS SHOWN TO BE MET AFTER CADMIUM PLATING. THICKNESS OF PLATE .0003 MIN. TO .0005 MAX. MIN. THICKNESS TO BE .0002 ON THREADED AREAS. NO ALLOWANCE FOR PLATING IN HOLES

125 √ SURFACE ROUGHNESS INCLUDING REAMED HOLES PER MIL-STD-10

200 √ FOR ALL DRILLED HOLES

REMOVE ALL BURRS.
BREAK ALL EDGES .015-.031

INSPECTION INFORMATION
MINIMUM PERMISSIBLE
AVERAGE EDGE DISTANCE
MARKED IS

SYMBOL √ DENOTES SURFACE TO BE MACHINED

UNLESS OTHERWISE SPECIFIED TOLERANCE ON FLANGES IS ± 1/32

LENGTHS OF AN, NAS & MS AL ALY RIVETS SHORTER THAN 1 INCH ARE NOT SPECIFIED.

TOLERANCE ON LOFTED DELINEATIONS IS

DWG SIZE 34 X 86
PRINTING INFO ONLY
FULL SIZE SHEET AREA (36 X 88) = 22.0 SQ. FT.
1/2 SIZE SHEET AREA (1/4 OF FULL) = 5.5 SQ. FT.
PRINT TRIM LINE

LDW280-52587 F

LDW280-52587 F

02/02

NAS 9-1100

GRUMMAN AIRCRAFT ENGRG CORP., BETHPAGE, L. I., NEW YORK

MODEL OR END ITEM	SIZE	CODE IDENT NO.		
LM	J	26512	LDW280-52587	F
	SCALE NOTED		SHEET 4.00	

2 FRAMES

280-52587 SH 4

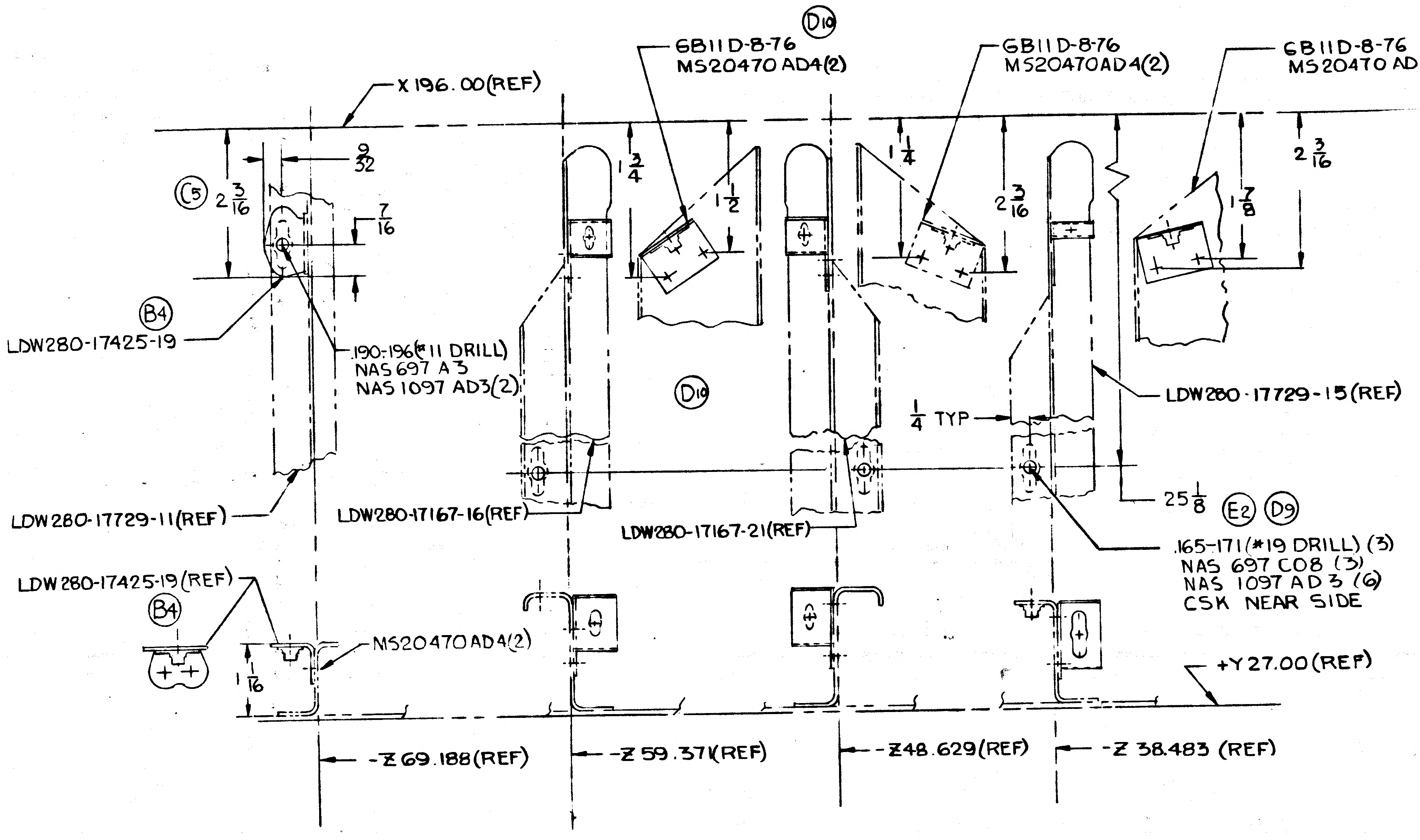
X 196.00 (REF)
GB11D-8-76
MS20470 AD4(2)
D10
GB11D-8-76
MS20470AD4(2)
GB11D-8-76
MS20470 AD4(2)
C5
2 3/16
9/32
7/16
1 3/4
1 1/2
1 1/4
2 3/16
2 3/16
1 7/8
B4
LDW280-17425-19
.190-.196 (#11 DRILL)
NAS 697 A3
NAS 1097 AD3(2)
D10
1/4 TYP
LDW280-17729-15 (REF)
LDW280-17729-11 (REF)
LDW280-17167-16 (REF)
LDW280-17167-21 (REF)
25 1/8
E2
D9
.165-.171 (#19 DRILL) (3)
NAS 697 C08 (3)
NAS 1097 AD3 (6)
CSK NEAR SIDE
LDW280-17425-19 (REF)
B4
MS20470 AD4(2)
1/16
+Y 27.00 (REF)
-Z 69.188 (REF)
-Z 59.371 (REF)
-Z 48.629 (REF)
-Z 38.483 (REF)

SECTION K-K
(ZONE 4C SH 3.00)
NO SCALE

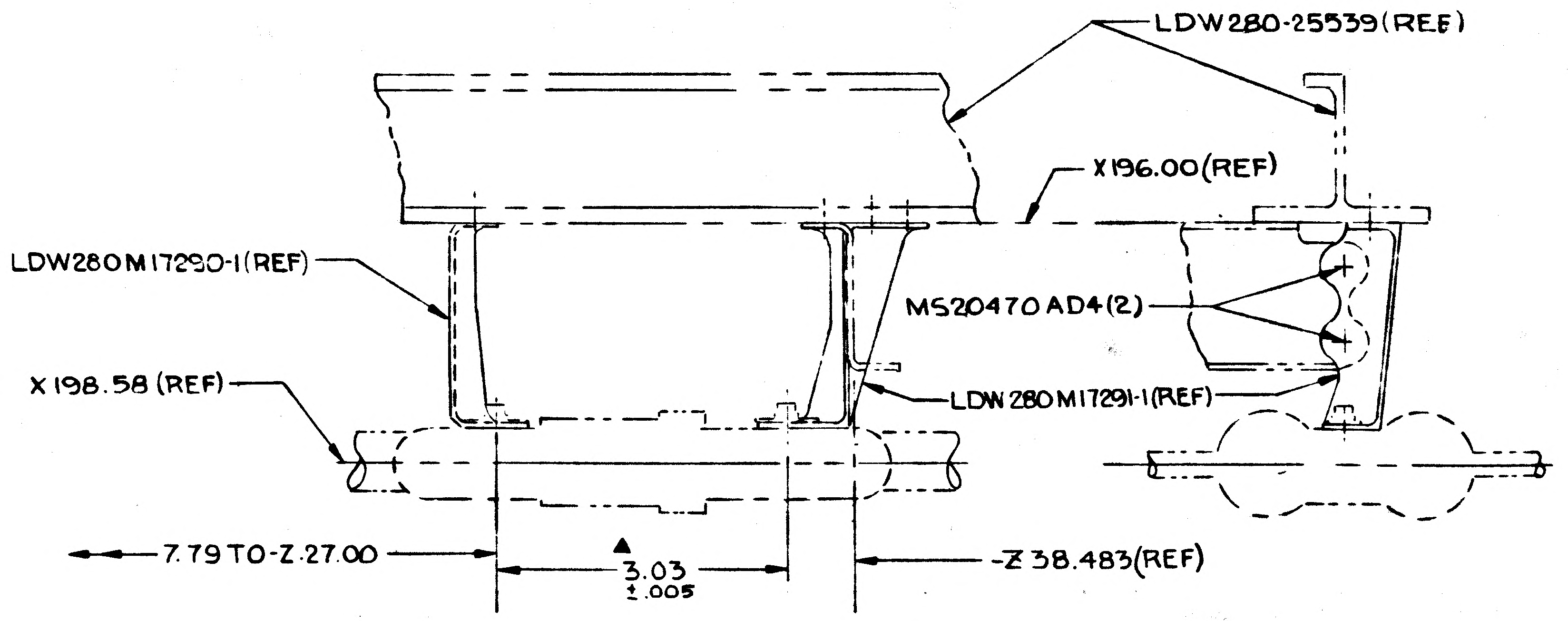
LDW280-25539 (REF)
X 196.00 (REF)
LDW280M17290-1 (REF)
MS20470 AD4(2)
X 198.58 (REF)
LDW280M17291-1 (REF)
7.79 TO -Z 27.00
3.03 ±.005
-Z 38.483 (REF)

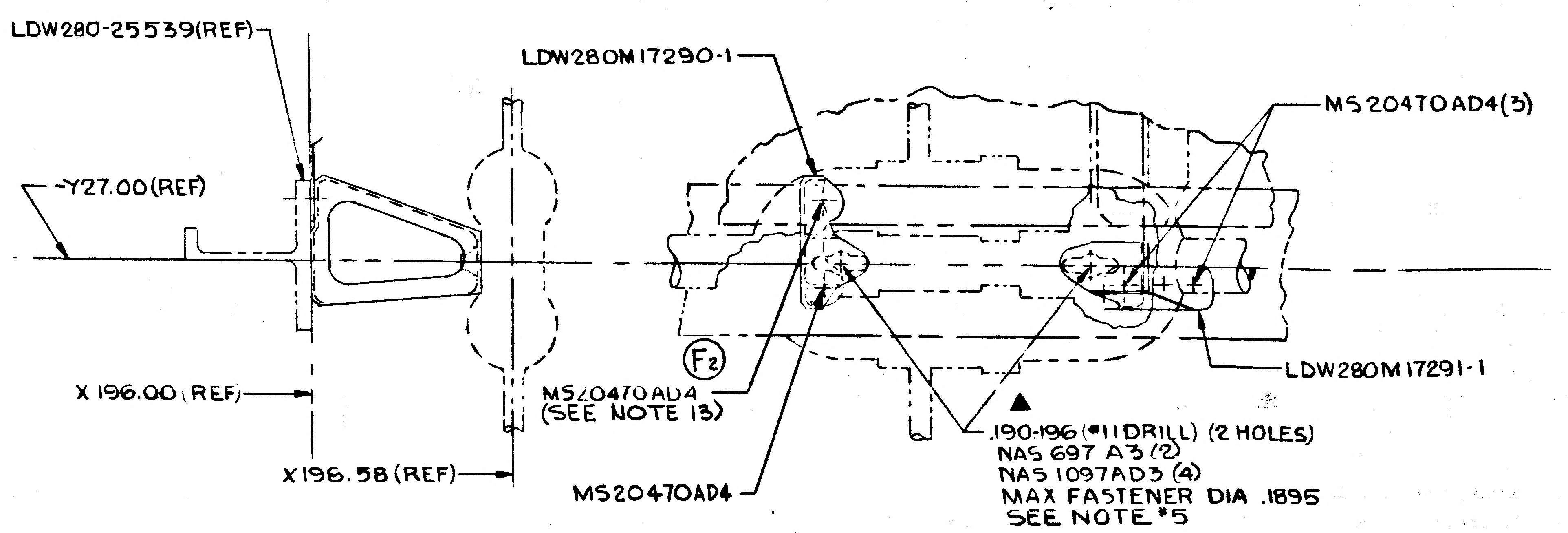
LDW280-25539 (REF)
LDW280M17290-1
MS20470 AD4(3)
-Y 27.00 (REF)
F2
X 196.00 (REF)
MS20470 AD4
(SEE NOTE 13)
LDW280M17291-1
.190-.196 (#11 DRILL) (2 HOLES)
NAS 697 A3 (2)
NAS 1097 AD3 (4)
MAX FASTENER DIA .1895
SEE NOTE #5
X 196.58 (REF)
MS20470 AD4

DETAIL J
(ZONE 4B SH 3.00)

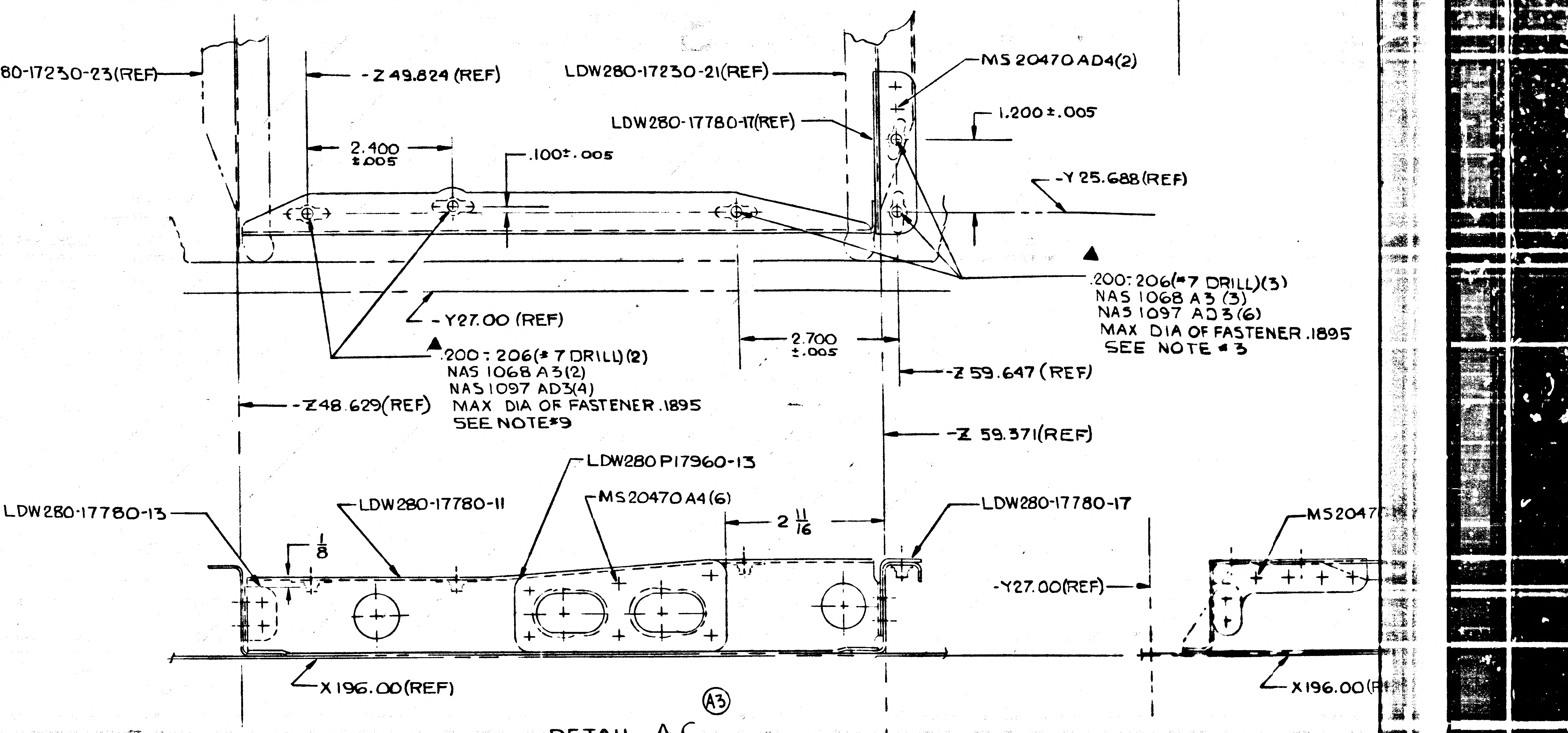
LDW280-17230-23 (REF)
-Z 49.824 (REF)
LDW280-17230-21 (REF)
MS20470 AD4(2)
LDW280-17780-17 (REF)
1.200 ±.005
2.400 ±.005
.100 ±.005
-Y 25.688 (REF)
.200-.206 (#7 DRILL) (3)
NAS 1068 A3 (3)
NAS 1097 AD3 (6)
MAX DIA OF FASTENER .1895
SEE NOTE #3
-Y 27.00 (REF)
.200-.206 (#7 DRILL) (2)
NAS 1068 A3 (2)
NAS 1097 AD3 (4)
MAX DIA OF FASTENER .1895
SEE NOTE #9
2.700 ±.005
-Z 59.647 (REF)
-Z 48.629 (REF)
-Z 59.371 (REF)
LDW280 P17960-13
LDW280-17780-13
LDW280-17780-11
MS20470 A4(6)
2 11/16
LDW280-17780-17
MS2047
1/8
-Y 27.00 (REF)
X 196.00 (REF)
X 196.00 (R

A3

DETAIL AC
(ZONE 3B SH 3.00)

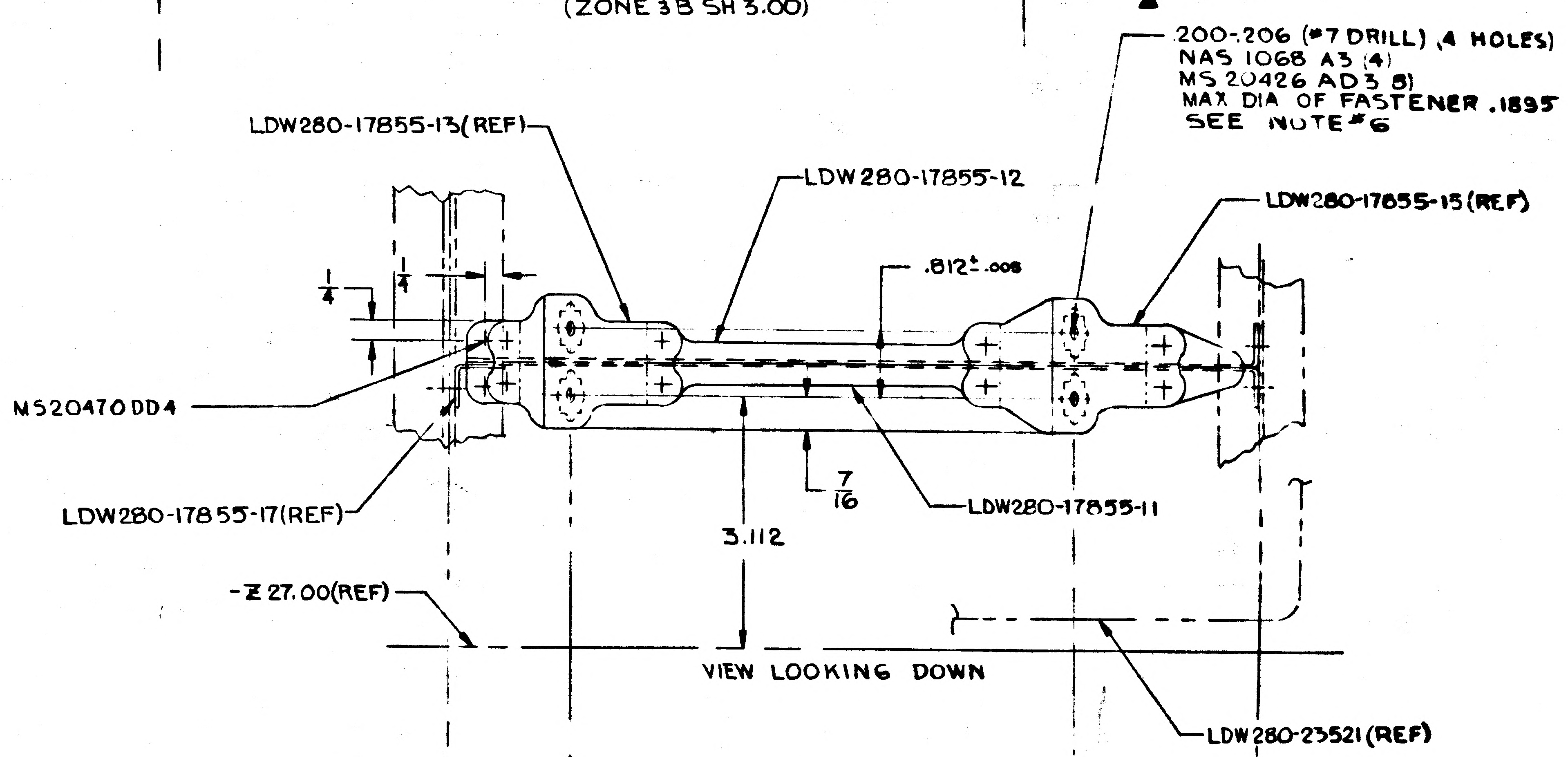
.200-.206 (#7 DRILL), 4 HOLES)
NAS 1068 A3 (4)
MS 20426 AD3 (8)
MAX DIA OF FASTENER .1895
SEE NOTE #6
LDW280-17855-13 (REF)
LDW280-17855-12
LDW280-17855-15 (REF)
1/4
1/4
.812 ±.005
MS20470 DD4
LDW280-17855-17 (REF)
7/16
LDW280-17855-11
3.112
-Z 27.00 (REF)
LDW280-23521 (REF)

VIEW LOOKING DOWN

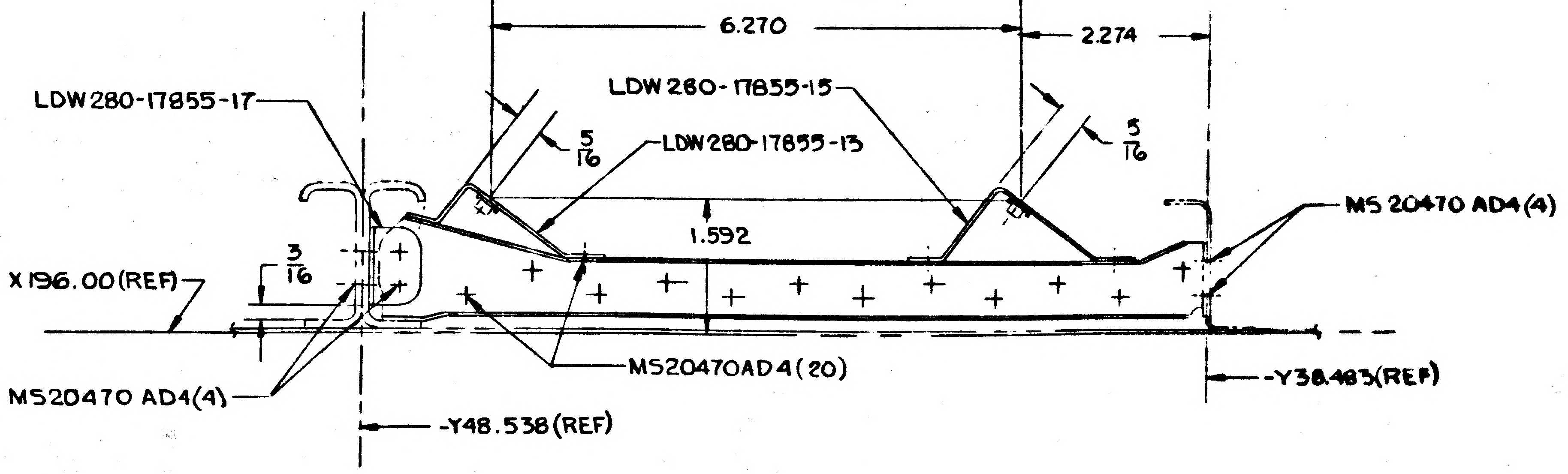
6.270
2.274
LDW280-17855-15
LDW280-17855-17
5/16
LDW280-17855-13
5/16
1.592
MS20470 AD4(4)
X 196.00 (REF)
3/16
MS20470 AD4(20)
MS20470 AD4(4)
-Y 48.538 (REF)
-Y 38.483 (REF)

DETAIL T
ZONE 5B SH 3.00
ROTATED 90° CW

01/02 NAS 9-1100

LDW280-52587 SH 6

28 27 26 25

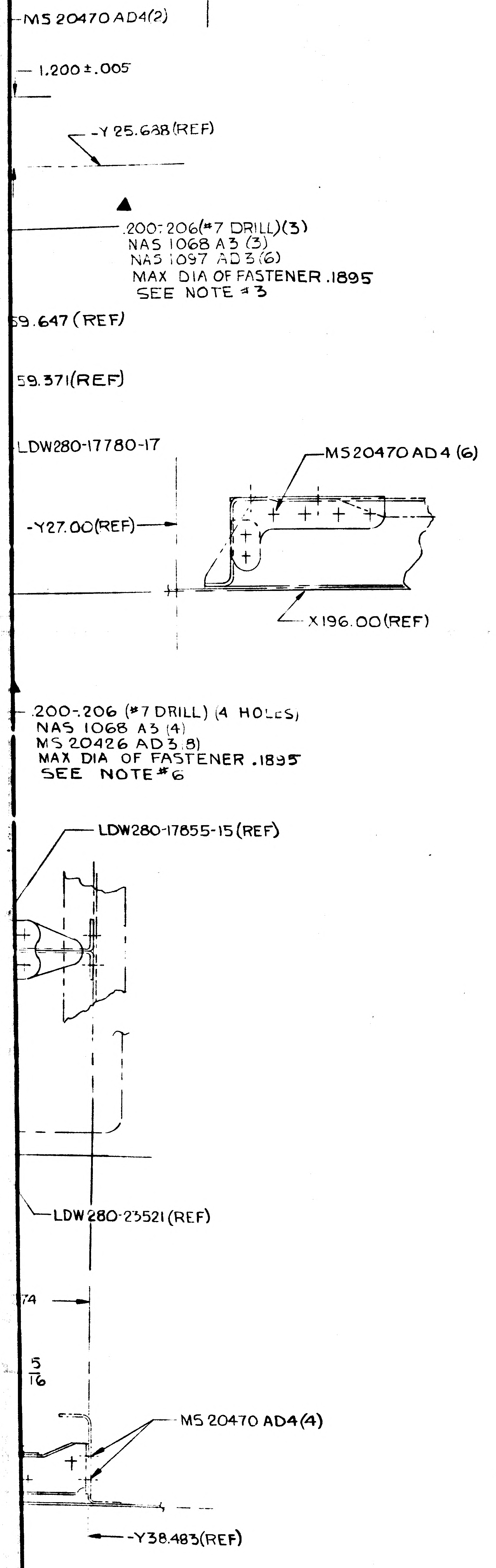
MS 20470 AD4(2)
1.200 ± .005
-Y 25.638(REF)
.200-.206(#7 DRILL)(3)
NAS 1068 A3 (3)
NAS 1097 AD3(6)
MAX DIA OF FASTENER .1895
SEE NOTE #3
59.647 (REF)
59.371(REF)
LDW280-17780-17
MS20470 AD4 (6)
-Y27.00(REF)
X196.00(REF)
.200-.206 (#7 DRILL) (4 HOLES)
NAS 1068 A3 (4)
MS 20426 AD3 8)
MAX DIA OF FASTENER .1895
SEE NOTE #6
LDW280-17855-15(REF)
LDW280-23521(REF)
74
5/16
MS 20470 AD4(4)
-Y38.483(REF)

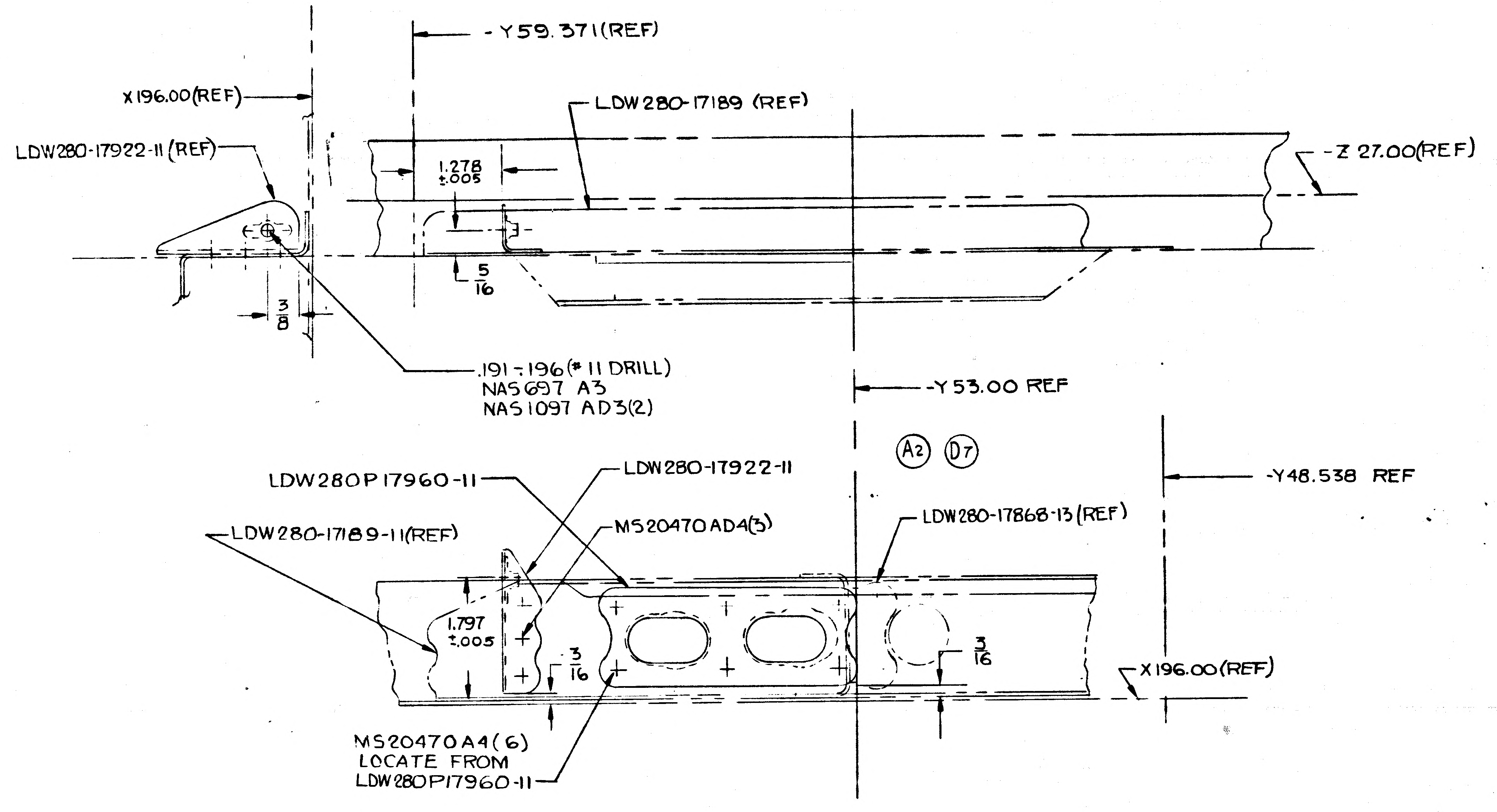
-Y59.371(REF)
X196.00(REF)
LDW280-17189 (REF)
LDW280-17922-11 (REF)
1.278 ±.005
-Z 27.00(REF)
5/16
3/8
.191-.196(#11 DRILL)
NAS697 A3
NAS1097 AD3(2)
-Y53.00 REF
A2
D7
-Y48.538 REF
LDW280P17960-11
LDW280-17922-11
LDW280-17189-11(REF)
MS20470AD4(3)
LDW280-17868-13(REF)
1.797 ±.005
3/16
3/16
X196.00(REF)
MS20470A4(6)
LOCATE FROM
LDW280P17960-11

DETAIL A B
(ZONE 5B SH 3.00)
ROTATED 90° CW

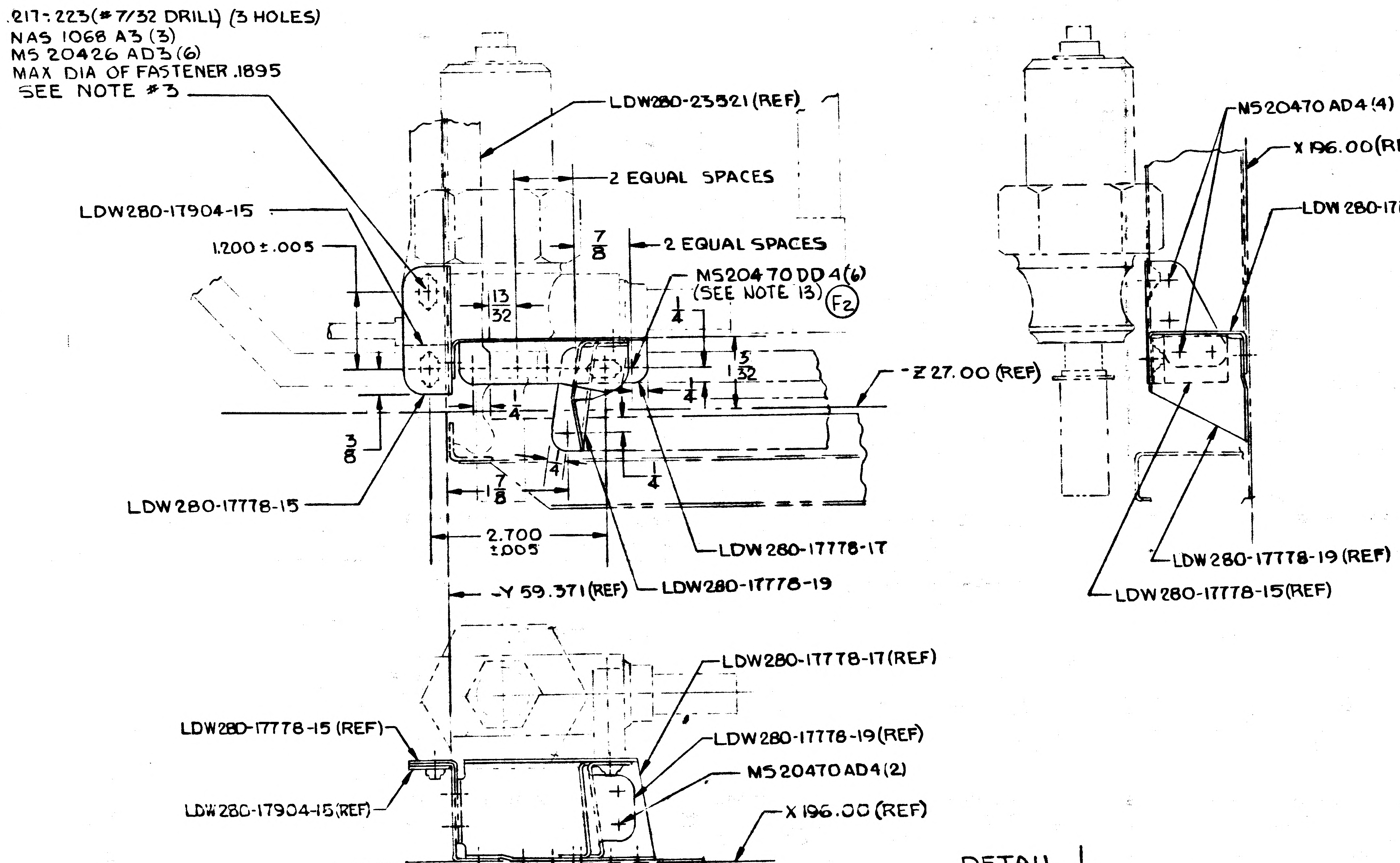
.217-.223(#7/32 DRILL) (3 HOLES)
NAS 1068 A3 (3)
MS 20426 AD3(6)
MAX DIA OF FASTENER .1895
SEE NOTE #3
LDW280-23521(REF)
2 EQUAL SPACES
LDW280-17904-15
1.200 ± .005
7/8
2 EQUAL SPACES
13/32
MS20470DD4(6)
(SEE NOTE 13)
F2
1/4
5/32
-Z 27.00 (REF)
1/4
3/8
1/4
1/4
1/4
1 7/8
LDW280-17778-15
2.700 ±.005
LDW280-17778-17
-Y 59.371(REF)
LDW280-17778-19
MS20470 AD4 (4)
X196.00(REF)
LDW280-17778-17(REF)
LDW280-17778-19 (REF)
LDW280-17778-15(REF)
LDW280-17778-17(REF)
LDW280-17778-15 (REF)
LDW280-17778-19(REF)
LDW280-17904-15(REF)
MS20470AD4(2)
X 196.00 (REF)

DETAIL L
(ZONE 5A SH 3.00)
ROTATED 90° CW

MANUFACTURING OPERATIONS
UNLESS OTHERWISE SPECIFIED
NOTES CHECKED √ APPLY TO THIS DWG.

PART NUMBER
AND ALL OTHER MARKINGS
IN REGION MARKED ⊠
USE BOTH SIDES IF NECESSARY.

FILLET AND INSIDE CORNER
RADII TOLERANCES
.016R TO .062R ± .010
.063R TO .250R ± .015
OVER .250R ± .030

DEPTH SHOWN FOR TAPPED
HOLES IS FULL THDS. 2-3 IMP THDS.
BEYOND PERMISSIBLE.

EXTERNAL THREAD LENGTH
SHOWN INCLUDES
2 IMPERFECT THREADS MAX.

DO NOT CADMIUM PLATE & PAINT
HOLES OR SURFACES MARKED
WITH DOUBLE ASTERISK.

MISMATCH STEP OF ± .005
PERMISSIBLE DUE TO CHANGE
OF CUTTERS AT INSIDE
INTERSECTING SURFACES.

DIAMETERS MARKED
MUST BE CONCENTRIC WITHIN
FULL INDICATOR
READING

HOLES MUST BE KEPT FREE OF
CHROME PLATING SOLUTION

ALL DIMENSIONS SHOWN TO BE MET
AFTER CADMIUM PLATING.
THICKNESS OF PLATE .0003 MIN.
TO .0005 MAX. MIN. THICKNESS TO
BE .0002 ON THREADED AREAS.
NO ALLOWANCE FOR PLATING IN
HOLES

125 √ SURFACE ROUGHNESS
INCLUDING REAMED HOLES
PER MIL-STD-10

200 √ FOR ALL DRILLED HOLES

REMOVE ALL BURRS.
BREAK ALL EDGES .015-.031

INSPECTION INFORMATION
MINIMUM PERMISSIBLE
AVERAGE EDGE DISTANCE
MARKED IS

SYMBOL √ DENOTES SURFACE
TO BE MACHINED

UNLESS OTHERWISE SPECIFIED
TOLERANCE ON FLANGES IS ± 1/32

LENGTHS OF AN, NAS & MS AL ALY
RIVETS SHORTER THAN 1 INCH ARE
NOT SPECIFIED.

TOLERANCE ON LOFTED
DELINEATIONS IS

DWG SIZE 34 X 86

PRINTING INFO ONLY
FULL SIZE SHEET AREA (36 X 88)= 22.0 SQ. FT.
1/2 SIZE SHEET AREA (1/4 OF FULL)= 5.5 SQ. FT.

PRINT TRIM LINE

D C B A

LDW280-52587 F

LDW280-52587 F

02 / 02 NAS 9-1100

280-52587 SH 6

GRUMMAN AIRCRAFT ENGRG CORP., BETHPAGE, L. I., NEW YORK

LM	SIZE J	CODE IDENT NO. 26512	LDW280-52587	F
MODEL OR END ITEM	SCALE NOTED		SHEET 6.00	

2 FRAMES

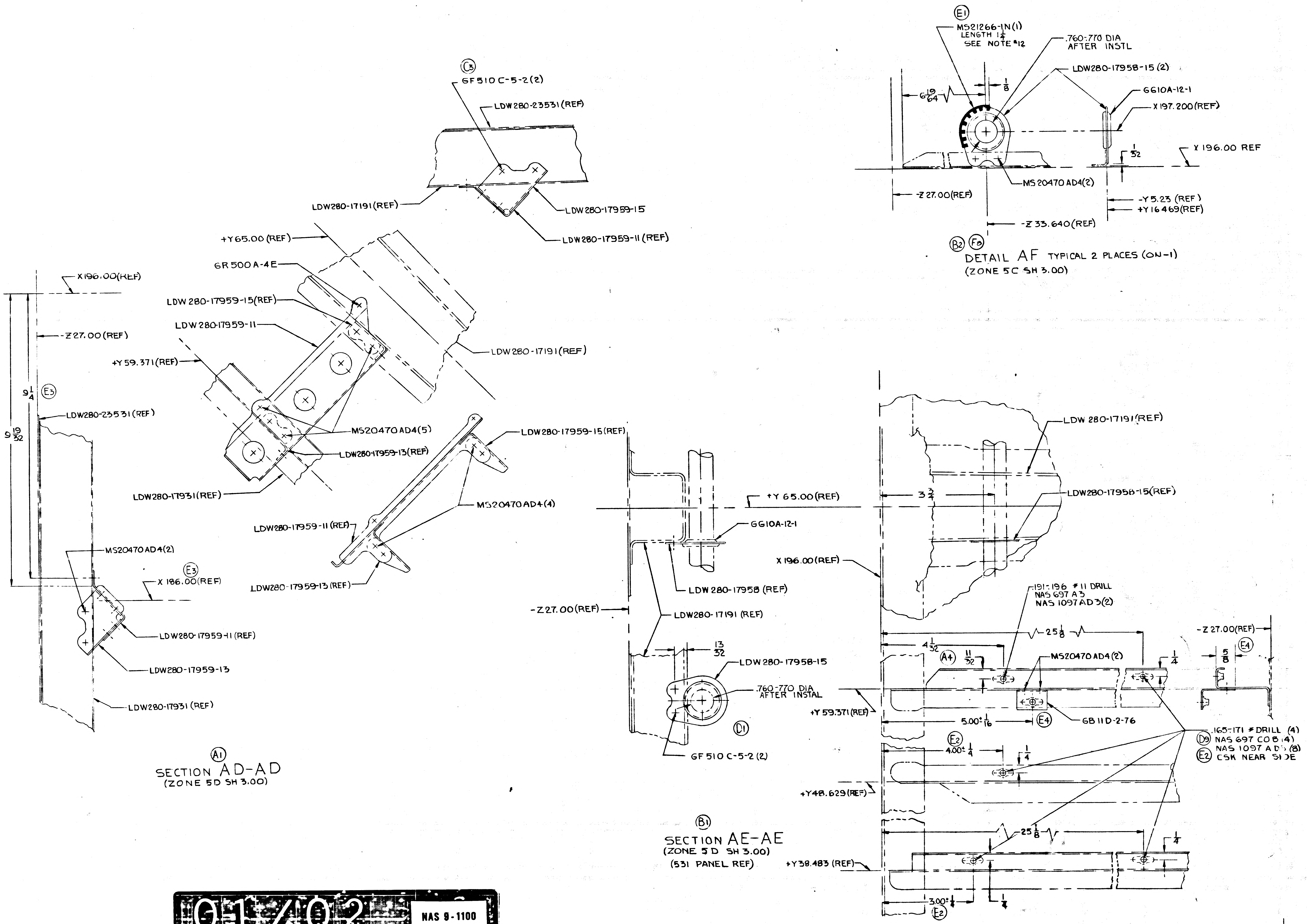
40
39
38
37
D
C
B
A
Ⓒ3
GF510C-5-2(2)
LDW280-23531(REF)
LDW280-17191(REF)
LDW280-17959-15
LDW280-17959-11(REF)
+Y65.00(REF)
6R500A-4E
LDW280-17959-15(REF)
LDW280-17959-11
+Y59.371(REF)
LDW280-17191(REF)
MS20470AD4(5)
LDW280-17959-13(REF)
LDW280-17931(REF)
X196.00(REF)
-Z27.00(REF)
9 1/4
Ⓔ3
9 19/32
LDW280-23531(REF)
LDW280-17959-15(REF)
MS20470AD4(4)
LDW280-17959-11(REF)
LDW280-17959-13(REF)
MS20470AD4(2)
Ⓔ3
X186.00(REF)
LDW280-17959-11(REF)
LDW280-17959-13
LDW280-17931(REF)
Ⓔ1
MS21266-1N(1)
LENGTH 1 1/4
SEE NOTE #12
.760-.770 DIA
AFTER INSTL
LDW280-17958-15(2)
6 19/64
1/8
GG10A-12-1
X197.200(REF)
1/32
X196.00 REF
MS20470AD4(2)
-Z27.00(REF)
-Y5.23(REF)
+Y16.469(REF)
-Z33.640(REF)
Ⓑ2 Ⓕ8
+Y65.00(REF)
GG10A-12-1
LDW280-17958(REF)
-Z27.00(REF)
LDW280-17191(REF)
13/32
LDW280-17958-15
.760-.770 DIA
AFTER INSTAL
Ⓓ1
GF510C-5-2(2)
LDW280-17191(REF)
3 3/4
LDW280-17958-15(REF)
X196.00(REF)
.191-.196 #11 DRILL
NAS697A3
NAS1097AD3(2)
25 1/8
4 1/32
Ⓐ4
11/32
MS20470AD4(2)
1/4
-Z27.00(REF)
5/8
Ⓔ4
+Y59.371(REF)
5.00±1/16
Ⓔ4
GB11D-2-76
.165-.171 #DRILL (4)
Ⓓ9 NAS697CO8(4)
NAS1097AD5(8)
Ⓔ2 CSK NEAR SIDE
Ⓔ2
4.00±1/4
1/4
+Y48.629(REF)
25 1/8
1/4
+Y38.483(REF)
3.00±1/4
1/4
Ⓔ2

Ⓐ1

SECTION AD-AD
(ZONE 5D SH 3.00)

Ⓑ1

SECTION AE-AE
(ZONE 5D SH 3.00)
(531 PANEL REF)

DETAIL AF TYPICAL 2 PLACES (ON-1)
(ZONE 5C SH 3.00)

01/02

NAS 9-1100

LDW280-52587	SH 7

LDW280-52587 SH7

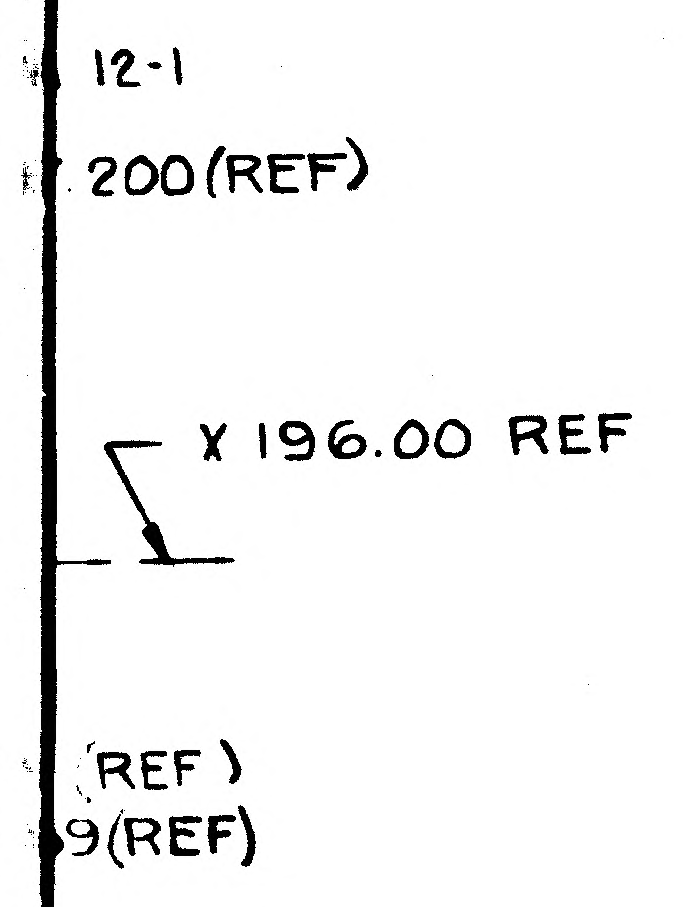
12-1
200(REF)
X 196.00 REF
(REF)
9(REF)

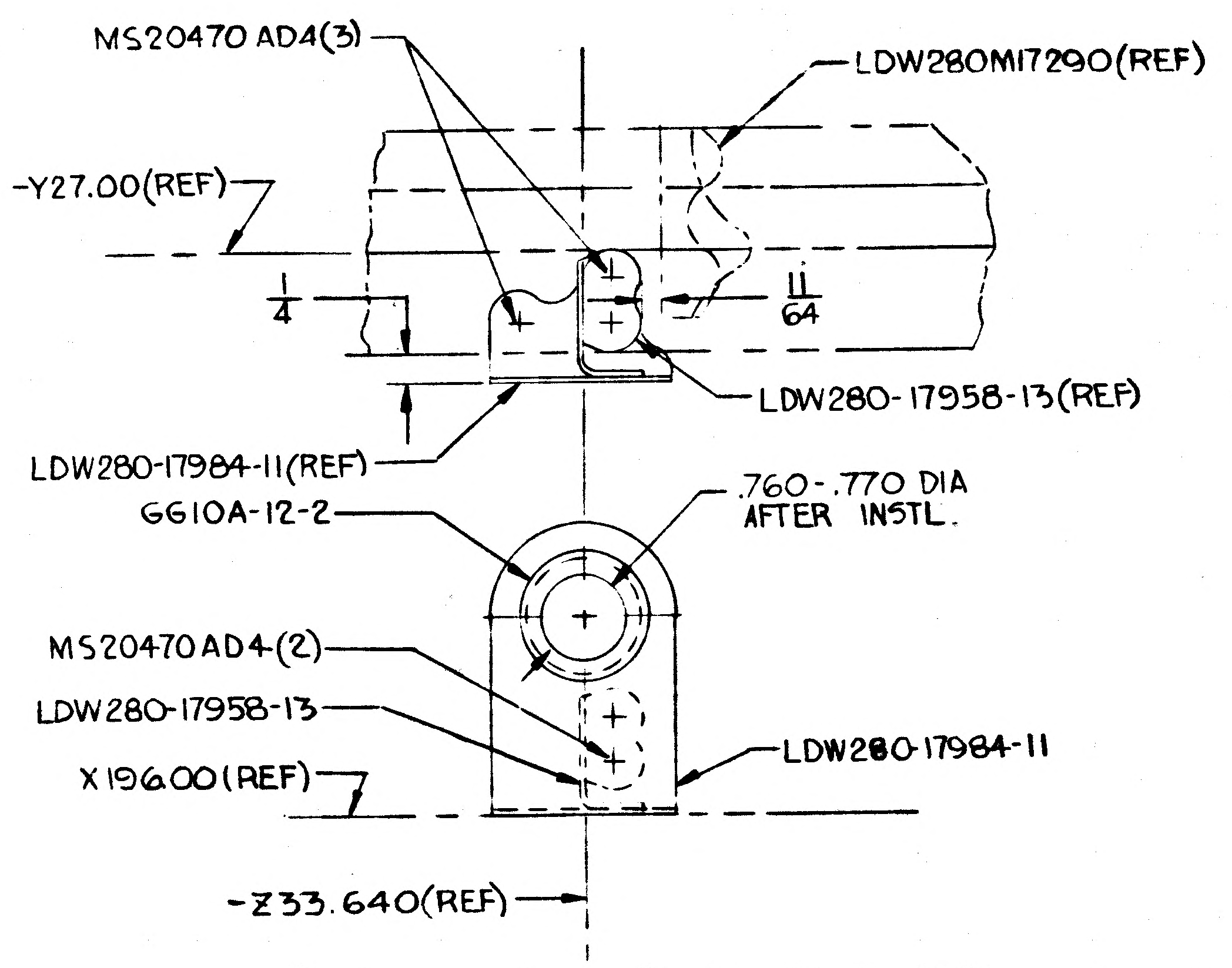
MS20470 AD4(3)
LDW280M17290(REF)
-Y27.00(REF)
1/4
11/64
LDW280-17958-13(REF)
LDW280-17984-11(REF)
.760-.770 DIA AFTER INSTL.
6610A-12-2
MS20470AD4-(2)
LDW280-17958-13
X196.00(REF)
LDW280-17984-11
-Z33.640(REF)

Ⓑ2
DETAIL AG
(ZONE 5B SH 3.00)

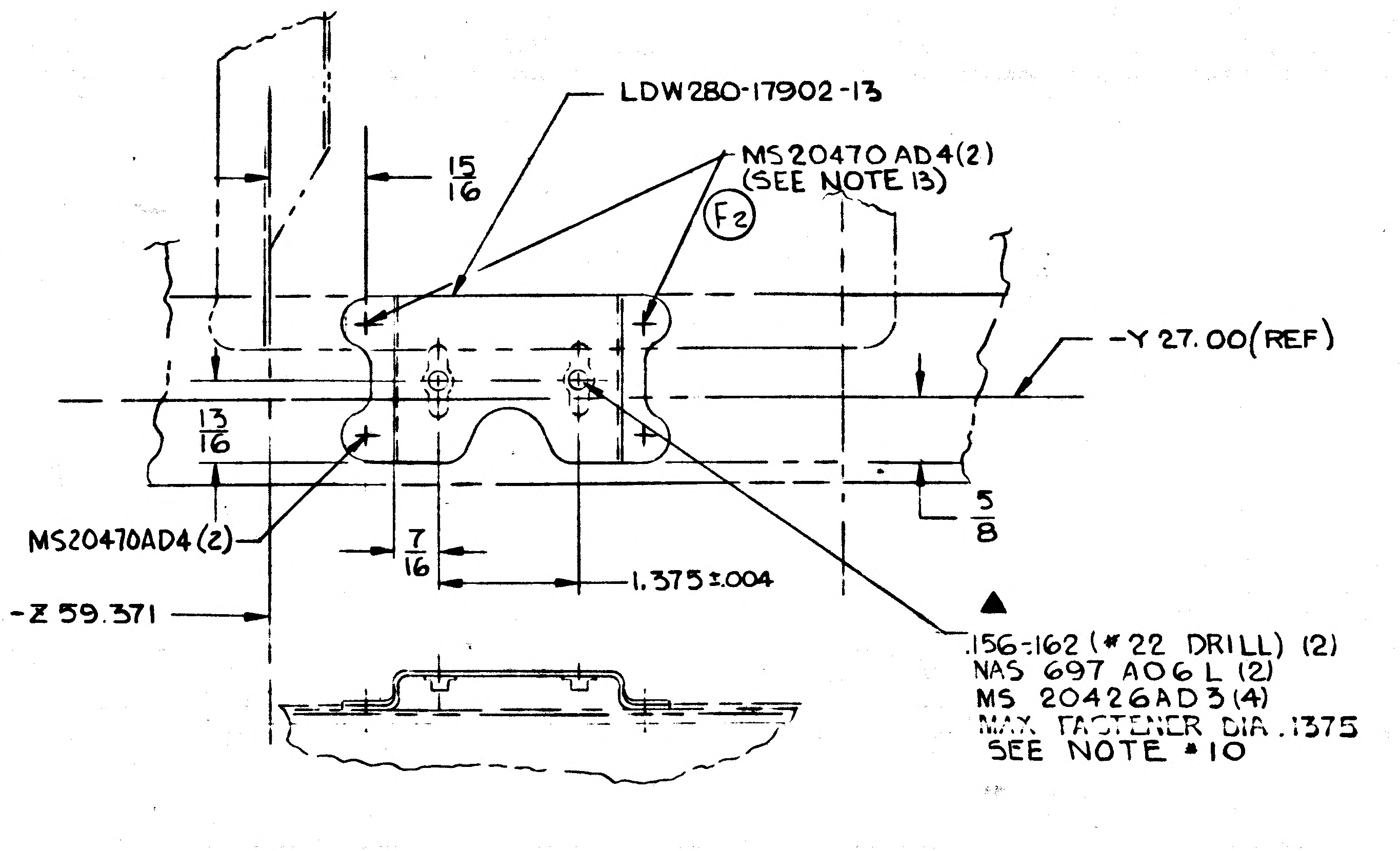
LDW280-17902-13
15/16
MS20470 AD4(2)
(SEE NOTE 13)
Ⓕ2
-Y 27.00(REF)
13/16
5/8
MS20470AD4(2)
7/16
1.375±.004
-Z 59.371
▲
.156-.162 (#22 DRILL) (2)
NAS 697 A06L (2)
MS 20426AD3(4)
MAX. FASTENER DIA .1375
SEE NOTE #10

Ⓒ1
DETAIL AK
(ZONE 4B SH 3.00)

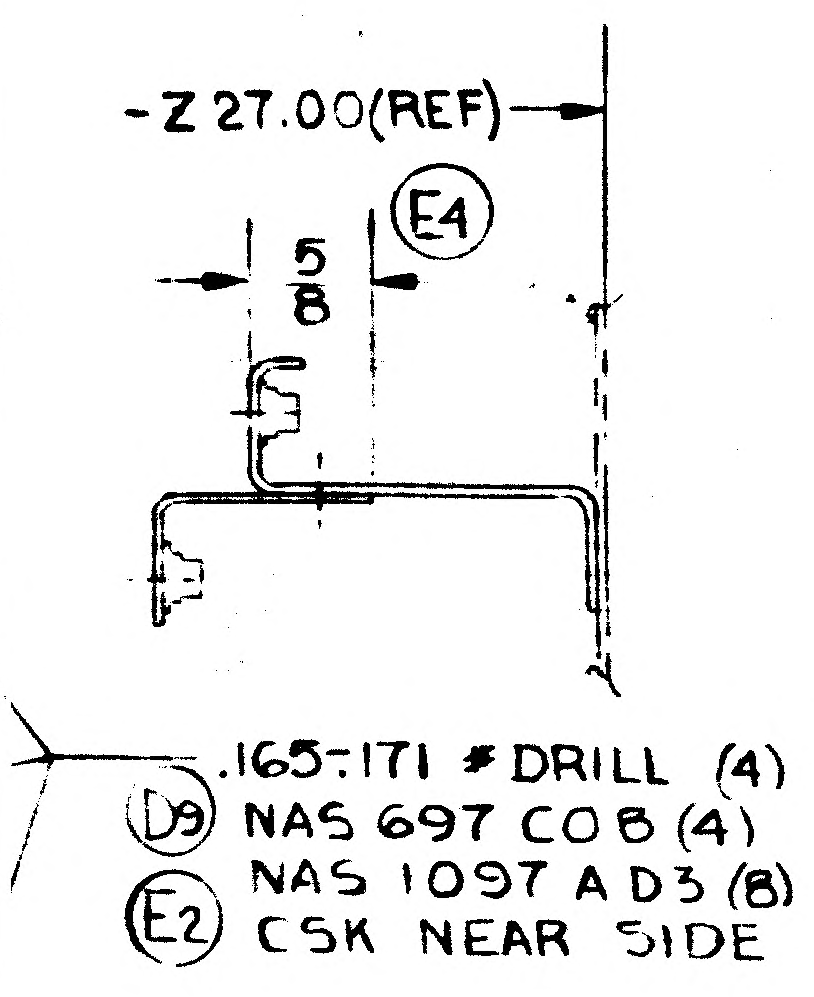
-Z 27.00(REF)
5/8
Ⓔ4
.165-.171 # DRILL (4)
Ⓓ9 NAS 697 C0B (4)
NAS 1097 AD3 (8)
Ⓔ2 CSK NEAR SIDE

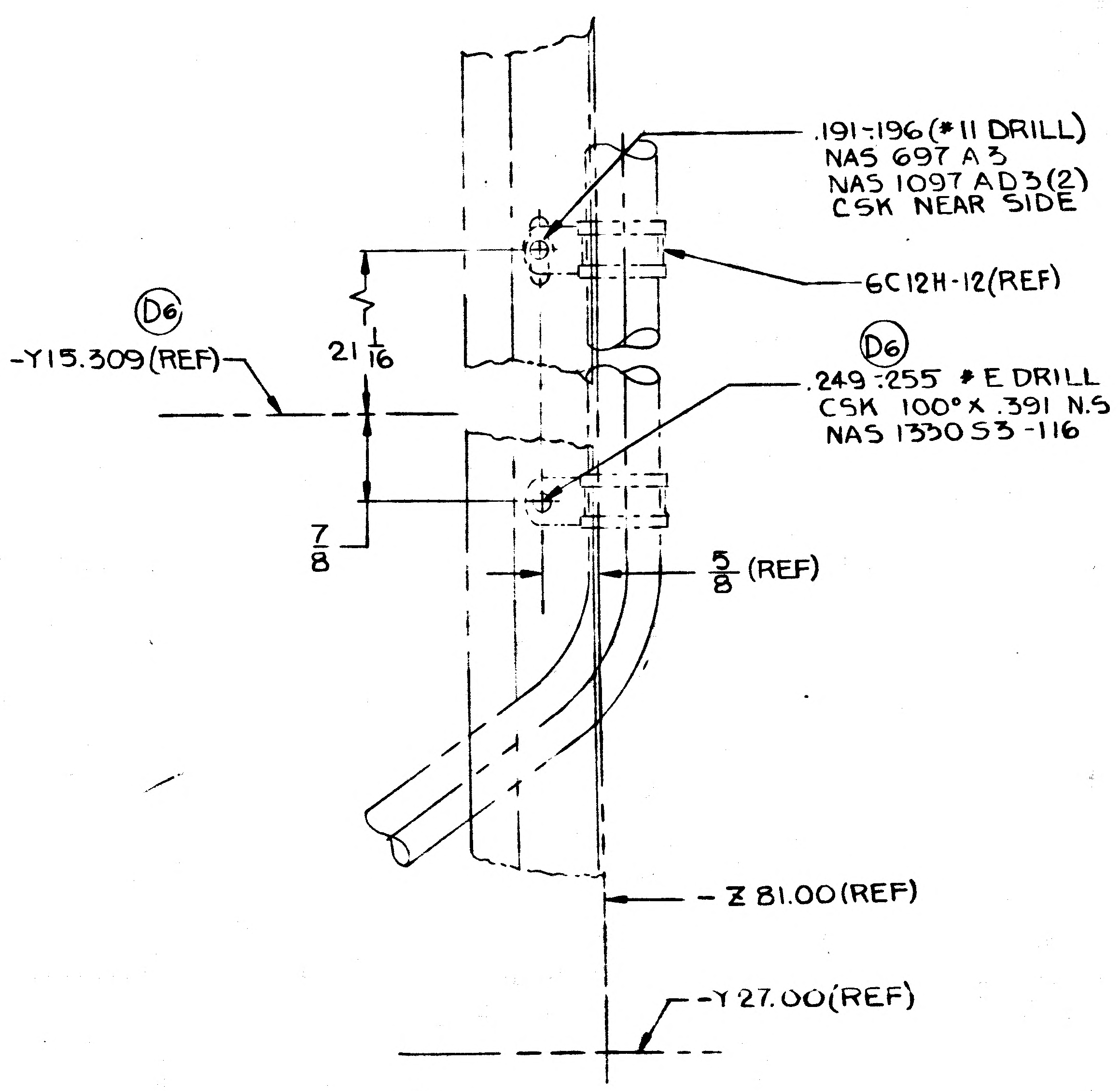
.191-.196 (#11 DRILL)
NAS 697 A 3
NAS 1097 AD3(2)
CSK NEAR SIDE
6C12H-12(REF)
Ⓓ6
-Y15.309(REF)
21/16
Ⓓ6
.249-.255 # E DRILL
CSK 100° X .391 N.S
NAS 1330S3-116
7/8
5/8 (REF)
-Z 81.00(REF)
-Y27.00(REF)

Ⓑ3
DETAIL AH
(ZONE 3B SH 3.00)

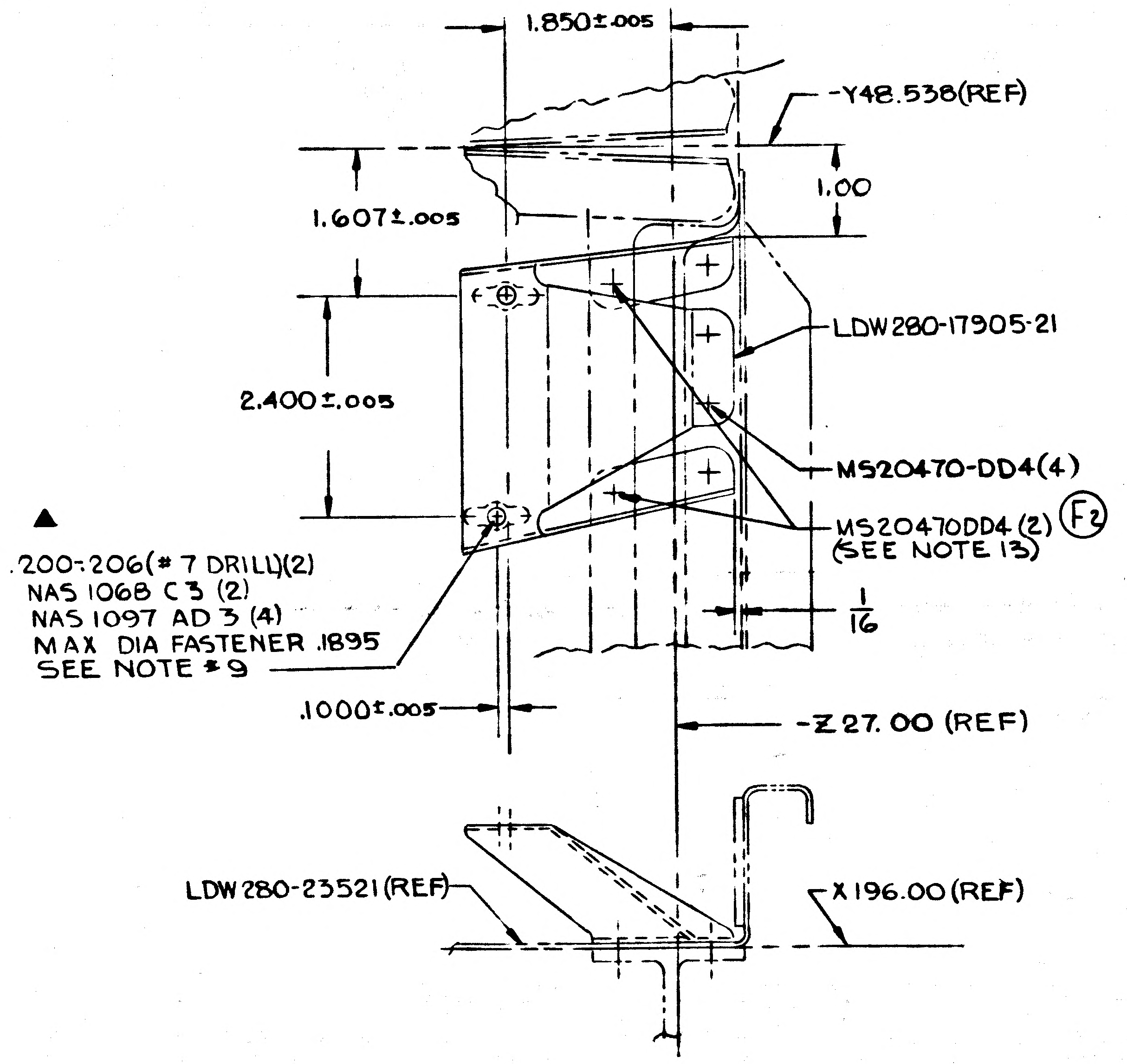
1.850±.005
-Y48.538(REF)
1.607±.005
1.00
LDW280-17905-21
2.400±.005
MS20470-DD4(4)
▲
.200-.206(#7 DRILL)(2)
NAS 1068 C3 (2)
NAS 1097 AD 3 (4)
MAX DIA FASTENER .1895
SEE NOTE #9
MS20470DD4 (2)
(SEE NOTE 13)
Ⓕ2
1/16
.1000±.005
-Z 27.00 (REF)
LDW280-23521(REF)
X196.00(REF)

DETAIL AJ
(ZONE 5B SH 3.00)

MANUFACTURING OPERATIONS UNLESS OTHERWISE SPECIFIED NOTES CHECKED √ APPLY TO THIS DWG.	
PART NUMBER AND ALL OTHER MARKINGS IN REGION MARKED ⊠ USE BOTH SIDES IF NECESSARY.	
FILLET AND INSIDE CORNER RADII TOLERANCES .016R TO .062R ± .010 .063R TO .250R ± .015 OVER .250R ± .030	
DEPTH SHOWN FOR TAPPED HOLES IS FULL THDS. 2-3 IMP THDS. BEYOND PERMISSIBLE.	
EXTERNAL THREAD LENGTH SHOWN INCLUDES 2 IMPERFECT THREADS MAX.	
DO NOT CADMIUM PLATE & PAINT HOLES OR SURFACES MARKED WITH DOUBLE ASTERISK.	
MISMATCH STEP OF ± .005 PERMISSIBLE DUE TO CHANGE OF CUTTERS AT INSIDE INTERSECTING SURFACES.	
DIAMETERS MARKED MUST BE CONCENTRIC WITHIN FULL INDICATOR READING	
HOLES MUST BE KEPT FREE OF CHROME PLATING SOLUTION.	
ALL DIMENSIONS SHOWN TO BE MET AFTER CADMIUM PLATING. THICKNESS OF PLATE .0003 MIN. TO .0005 MAX. MIN. THICKNESS TO BE .0002 ON THREADED AREAS. NO ALLOWANCE FOR PLATING IN HOLES	
125 √ SURFACE ROUGHNESS INCLUDING REAMED HOLES PER MIL-STD-10	
200 √ FOR ALL DRILLED HOLES	
REMOVE ALL BURRS. BREAK ALL EDGES .015-.031	
INSPECTION INFORMATION MINIMUM PERMISSIBLE AVERAGE EDGE DISTANCE MARKED IS	
SYMBOL √ DENOTES SURFACE TO BE MACHINED	
UNLESS OTHERWISE SPECIFIED TOLERANCE ON FLANGES IS ± 1/32	
LENGTHS OF AN, NAS & MS AL ALY RIVETS SHORTER THAN 1 INCH ARE NOT SPECIFIED.	
TOLERANCE ON LOFTED DELINEATIONS IS	

DWG SIZE 34 X 86

PRINTING INFO ONLY
FULL SIZE SHEET AREA (36 X 88)- 22.0 SQ. FT.
1/2 SIZE SHEET AREA (1/4 OF FULL)- 5.5 SQ. FT.
PRINT TRIM LINE

C

B

LDW280-52587 F

LDW280-52587 F

02/02 NAS 9-1100

A

	GRUMMAN AIRCRAFT ENGRG CORP., BETHPAGE, L. I., NEW YORK			
	SIZE J	CODE IDENT NO. 26512	LDW280-52587	F
LM				
MODEL OR END ITEM	SCALE NOTED		SHEET 7.00	

Ⓕ

2 FRAMES

REVISIONS

CHANGE LTR	ITEM NO.	SHEET NO.	ZONE	GRUMMAN INFO ONLY	DET SPEC	CLASS I	CLASS II	ENGRG ORDER	DESCRIPTION	EFFECTIVITY	DISPOSITION OF EXISTING PARTS: REWORK	DISPOSITION OF EXISTING PARTS: SCRAP	CHANGED BY AND DATE	ENGRG APPD	~~GOVT~~ APPD
E	1	3.00, 7.00 10.00, 2.01	4B 37D 63C				✓	EO E1	IN F/D & BM: REMOVED LDW280-17903-11 & -13. ADDED MS21266-1N (2) REMOVED DETAIL BG	LM-2(32) LM-3(33)	✓		A. LITVINOFF 2-28-67		8/4/67
	2	5.00 6.00 7.00 8.00 9.00	23D 31C 38A 55D 57A				✓	EO E2	IN F/D & B/M: ADDED: GB11D-8-76(2) MS20470AD4 (10), GB11D-2-76 (3), NAS697 C08 (4) & NAS1097AD3 (8) IN F/D: DRILL #19 (4)						
	3	7.00	40A				✓	EO E3	IN F/D ON-1 ADDED 9 1/4 DIM. X186.00 REF WAS X186.00		NOT	REQ'D			
	4	7.00	38A				✓	EO E4	ON-1 IN F/D & B/M: ADDED GB11D-2-76 (1) & MS20470AD4 (2)		✓				
F	1	10.00	61B					EO F1	ON-1 ADDED LDW280-18065-43 & MS20470DD5 (2)	LM-2(32) LM-3(33	✓		G. ENGEL OCT. 14, 1967		
	2	3.00 6.00 7.00 8.00 10.00	34A 60A 46B 34D 26A				✓	EO F2 LCD 1533	ADDED NOTE 13. REVISED DETAILS J, BH, AJ, L, AA-AA, AK & AL	LM-2 (32) LM-3 (33)	✓				
	3	8.00	47B			✓		EO F3 LCD 1244	ON-3, LDW280-17871-19 WAS LDW280-17871-15	LM-3(33)	✓				
	4	4.00	12C				✓	EO F4 LCD 1533	IN F/D, B/M & M/B REMOVED -1 ADDED -3	LM-3(33	✓				
	5	5.00 3.00	22C 3B				✓	EO F5 LCD 1533	ADDED DETAIL CB & NOTE 14. ON-3 ADDED LDW280-17780-19, -21, -23, -25 & -27 & REMOVED LDW280-17780-11 & -13. ADDED NAS1097AD4 (4), MS20470DD4 (54), NAS1068 (3) NAS1097AD3 (6) & DRILL #7 (.200 -.206) 3 HOLES.	LM-3(33)	✓				
	6	8.00	47A				✓	EO F6	IN F/D -1 INSTL GR500A-G5 (22) WAS MS20470DD5 (22) IN B/M -1 INSTL ADDED GR500A-G5 (22)	LM-3 (33)	✓				
	7	12.00				✓		EO F7 LCD 1244	ON -3 ADDED LDW280-18313-1 BRACKET ASSY (9 REQ'D) PER MOD. ADDED NAS1097AD4 (9), MS20470AD4 (18) ADDED SH 12.00	LM-3 (33)	NOT	REQ'D			

LTR	~~GROUP LDR~~	VEH DES INT	STRUCTURES	STRUCTURES	WEIGHTS	RELIABILITY
E						
F						
G						

FOR CONTINUATION OF REVISIONS SEE SHEET 1.13

GRUMMAN AIRCRAFT ENGRG CORP, BETHPAGE, L. I., NEW YORK

SIZE	CODE IDENT NO.		
B	26512	LDW280-52587	G
SCALE NONE		SHEET 1.12	

77.3 5-66

01

NAS 9-1100

REVISIONS

FOR CONTINUATION OF REVISIONS SEE SHEET 1.14

CHANGE LTR	ITEM NO.	SHEET NO.	ZONE	GRUMMAN INFO ONLY	DET SPEC	CLASS I	CLASS II	ENGRG ORDER	DESCRIPTION	EFFECTIVITY	DISPOSITION OF EXISTING PARTS: REWORK	DISPOSITION OF EXISTING PARTS: SCRAP	CHANGED BY AND DATE	ENGRG APPD	GOVT APPD
F	8	2.01 2.02 2.03 5.00 7.00 12.00	18A 18B 19A 18C 37C 2B			✓		EO F8 LCD 1244	ON-3 ADDED: LDW280P18308-23 & -24 (2 EA), NAS680C3(5) MS20426B3(32), GB511J-06-4(16), MS21043-06(16), REMOVED LDW280-17989-13 & -15 (1 EA), LDW280-17424-11 & -13 (1EA), LDW280-17958-15(2), GG10A-12-1(2), MS20470AD4(4), MS21266-1N(2), NAS697A3(4), NAS1097AD3(8), MS20470AD4(8) & DETAILS AF, N, P, W & Y. ADDED DETAILS BP, BR, BS, BT, BU, BV, BW & BY. ADDED SH1.13	LM-3(33	✓		G. ENGEL OCT 14, 1967		
	9	12.00	7D 7E 5G 5F 5B			✓		EO F9 LCD 1244	REF EO F7 ON-3 REVISED THE FOLLOWING DIM'S 1 1/4 WAS 5/16, 1 11/16 WAS 15/32, 1/32 WAS 1 17/32, 3/4 WAS 1 13/16, 11/16 WAS 1 15/16	LM-3(33)	✓				
	10	2.03 2.04 5.00	21C 22C 21D				✓	EO F10	IN F/D-3 INSTL NAS1097DD4 WAS MS20470DD4, GR500A-4F WAS MS20470AD4, GR500A-4J WAS MS20470A4, MS20426AD4 WAS MS20470AD4, MS20470AD4(13) WAS (16). IN B/M-3 INSTL: ADDED GR500A-4F(3), GR500A-4J(6), MS20426AD4. REVISED NAS1097DD4 (10) WAS (9)	LM-3(33)	✓				
G	1	2.03 12.00	F3 C4			✓		EO G1 LCD 1244	REF EO F8 ON-3 REMOVED CALLOUT DR#11, NAS680C3(3) MS20426B3(8), NAS682C3. REVISED CALLOUT NAS680C3(8) WAS (4), MS20426B3(16) WAS (8). ADDED 31/32 DIM TO DETAIL BY, 27/32-DETAIL BU, 19/32-DETAIL BW & 17/32-DETAIL BV	LM-3(33)	✓				
	2	3.00	3A 5C 8B				✓	EO G2	ON-3 ADDED DR#19(7), NAS697C08(6), NAS1097AD3(14) NAS696C08(1)	LM-3(33)	✓				
	3	12.00	7E 5F			✓		EO G3 LCD 1244	REF EO F9 ON-3 REVISED DIMS 5/16 WAS 11/16 & 2 1/8 WAS 1 11/16	LM-3(33)	✓				
	4						✓	EO G4	REFERENCE EO F6 'FOR-1 INSTL' SHOULD BE "FOR-3 INSTL"	LM-3(33)	✓				
	5	1.00 2.03 5.00 11.00	23C 3H	P		✓		EO G5, CCA667 LCD 1244	ON-3 REMOVED MS20470DD4(3), REMOVED MS20470AD4(5) ADDED MS20426AD4(3). ADDED END ITEM LDW420-2370	LM-3(33), LFM 420-2370-003 LDW420-2370 SER NO. 1	✓		gg		

CHG APPROVED

LTR	GROUP LDR	VEH DES INT	STRUCTURES	STRUCTURES	WEIGHTS	RELIABILITY
F						
G						

GRUMMAN AIRCRAFT ENGRG CORP., BETHPAGE, L. I., NEW YORK

SIZE	CODE IDENT NO.		
B	26512	LDW280-52587	G
SCALE NONE			SHEET 1.13

ENG 77.18 3-66

01

NAS 9-1100

01702 NAS 9-1100

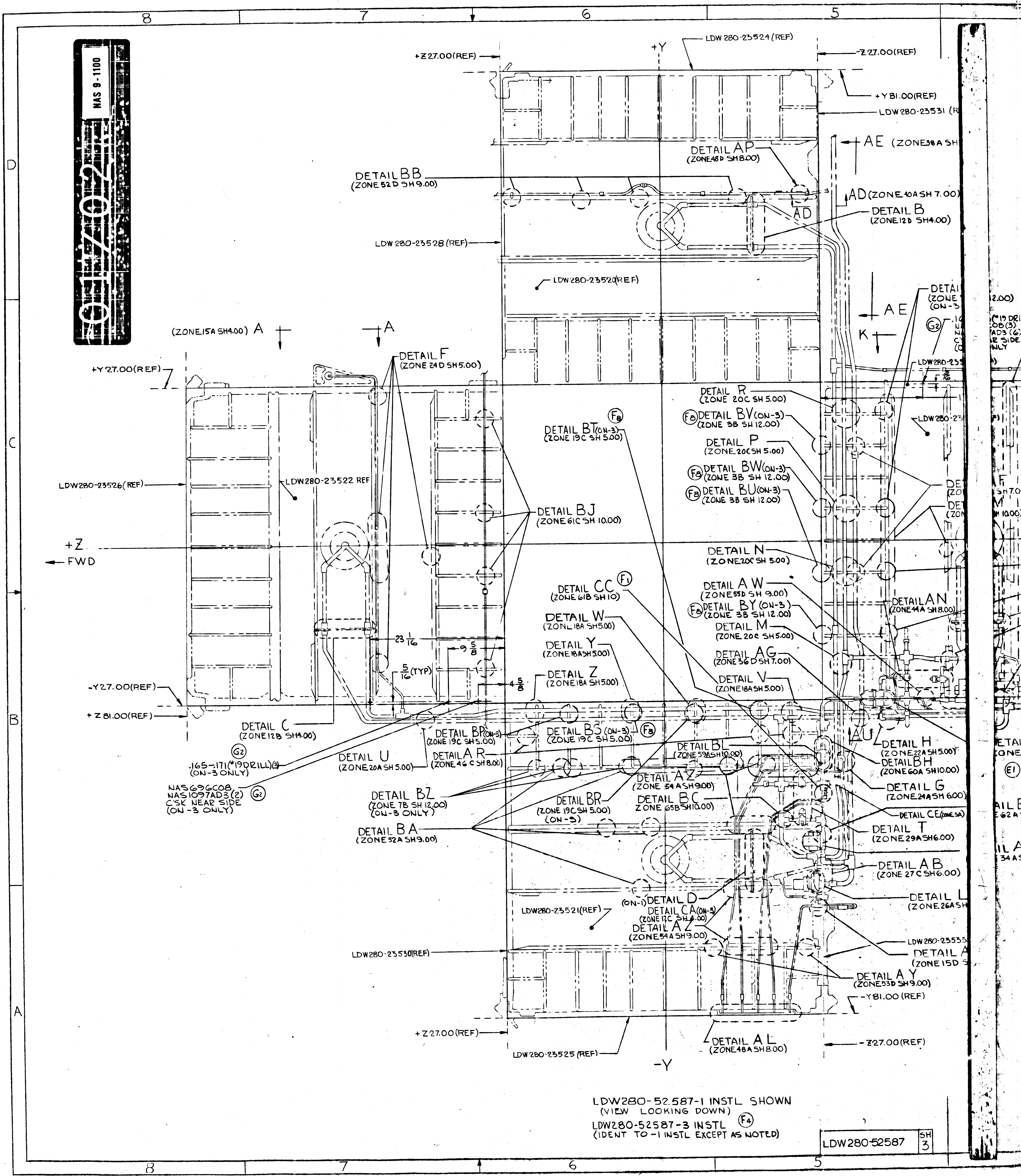

+Z27.00(REF)
+Y
LDW 280-23524 (REF)
-Z27.00(REF)
+Y81.00(REF)
LDW280-23531 (R
AE (ZONE38A SH
DETAIL AP (ZONE48D SH8.00)
AD (ZONE 40A SH 7.00)
DETAIL B (ZONE12D SH4.00)
DETAIL BB (ZONE 52D SH9.00)
LDW 280-23528 (REF)
LDW280-23520(REF)
(ZONE15A SH4.00) A
A
AE
K
DETAIL F (ZONE 24D SH5.00)
+Y27.00(REF)
DETAIL R (ZONE 20C SH 5.00)
DETAIL BT (ON-3) (ZONE 19C SH5.00)
DETAIL BV (ON-3) (ZONE 3B SH 12.00)
DETAIL P (ZONE 20C SH 5.00)
DETAIL BW (ON-3) (ZONE 3B SH 12.00)
DETAIL BU (ON-3) (ZONE 3B SH 12.00)
LDW280-23526(REF)
LDW280-23522 REF
DETAIL BJ (ZONE 61C SH 10.00)
+Z
FWD
DETAIL N (ZONE 20C SH 5.00)
DETAIL CC (ZONE 61B SH10)
DETAIL AW (ZONE55D SH 9.00)
DETAIL BY (ON-3) (ZONE 3B SH 12.00)
DETAIL M (ZONE 20C SH5.00)
DETAIL AN (ZONE44A SH8.00)
DETAIL W (ZONE 18A SH5.00)
DETAIL Y (ZONE18A SH5.00)
DETAIL AG (ZONE 36D SH7.00)
DETAIL Z (ZONE18A SH5.00)
DETAIL V (ZONE18A SH5.00)
23 1/16
9 5/8
5/16 (TYP)
4 5/8
-Y27.00(REF)
+Z81.00(REF)
DETAIL C (ZONE12B SH4.00)
DETAIL BP (ON-3) (ZONE 19C SH5.00)
DETAIL BS (ON-3) (ZONE 19C SH5.00)
DETAIL AR (ZONE 46C SH8.00)
DETAIL U (ZONE20A SH5.00)
DETAIL BL (ZONE 59A SH10.00)
AU
DETAIL H (ZONE22A SH5.00)
DETAIL BH (ZONE 60A SH10.00)
.165-.171(#19DRILL)(3) (ON-3 ONLY)
NAS696C08 NAS1097AD3(2) C'SK NEAR SIDE (ON-3 ONLY)
DETAIL AZ (ZONE 54A SH9.00)
DETAIL BC ZONE 65B SH10.00)
DETAIL G (ZONE24A SH6.00)
DETAIL CE (ZONE 3A)
DETAIL BZ (ZONE 7B SH 12.00) (ON-3 ONLY)
DETAIL BR (ZONE 19C SH 5.00) (ON-3)
DETAIL BA (ZONE 52A SH9.00)
DETAIL T (ZONE29A SH6.00)
DETAIL AB (ZONE 27C SH6.00)
DETAIL L (ZONE26A SH
(ON-1) DETAIL D
DETAIL CA (ON-3) (ZONE 12C SH4.00)
DETAIL AZ (ZONE54A SH9.00)
LDW280-23521(REF)
LDW280-23533
DETAIL A (ZONE 15D S
DETAIL AY (ZONE53D SH9.00)
LDW280-23530(REF)
-Y81.00 (REF)
+Z27.00(REF)
DETAIL AL (ZONE48A SH8.00)
-Z27.00(REF)
LDW 280-23525 (REF)
-Y
G2
F8
F1
E1

LDW280-52587-1 INSTL SHOWN
(VIEW LOOKING DOWN)
LDW280-52587-3 INSTL (F4)
(IDENT TO -1 INSTL EXCEPT AS NOTED)

LDW280-52587 SH 3

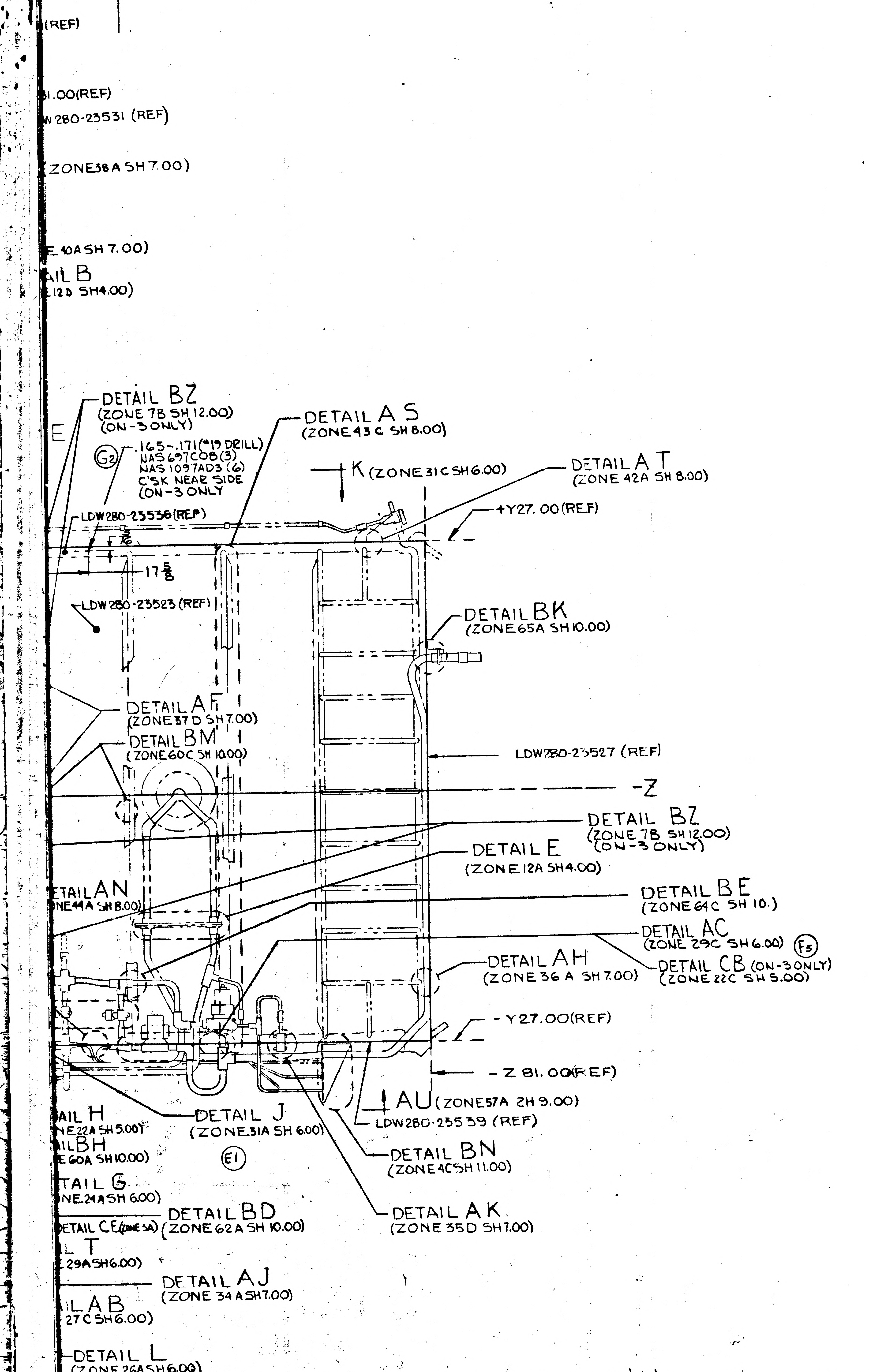
(REF)
1.00(REF)
W280-23531 (REF)
(ZONE38A SH7.00)
E 40A SH 7.00)
AIL B
E 12D SH4.00)
E
DETAIL BZ
(ZONE 7B SH 12.00)
(ON-3 ONLY)
G2
.165-.171(#19 DRILL)
NAS697C08(3)
NAS 1097AD3 (6)
C'SK NEAR SIDE
(ON-3 ONLY
DETAIL A S
(ZONE43 C SH 8.00)
K (ZONE31C SH6.00)
DETAIL A T
(ZONE 42A SH 8.00)
+Y27. 00 (REF)
LDW280-23536(REF)
5/16
17 5/8
LDW280-23523 (REF)
DETAIL BK
(ZONE65A SH10.00)
DETAIL AF
(ZONE37D SH7.00)
DETAIL BM
(ZONE60C SH 10.00)
LDW280-23527 (REF)
-Z
DETAIL BZ
(ZONE 7B SH 12.00)
(ON-3 ONLY)
DETAIL E
(ZONE 12A SH4.00)
ETAIL AN
NE44A SH8.00)
DETAIL B E
(ZONE64C SH 10.)
DETAIL AC
(ZONE 29C SH6.00)
F5
DETAIL AH
(ZONE 36 A SH7.00)
DETAIL CB (ON-3ONLY)
(ZONE 22C SH 5.00)
- Y27.00(REF)
- Z 81.00(REF)
AU (ZONE57A 2H 9.00)
LDW280-23539 (REF)
AIL H
NE22A SH5.00)
AIL BH
E 60A SH10.00)
DETAIL J
(ZONE31A SH 6.00)
E1
DETAIL BN
(ZONE4C SH 11.00)
TAIL G
NE24A SH 6.00)
DETAIL BD
(ZONE 62A SH 10.00)
DETAIL CE (ZONE 3A)
DETAIL AK
(ZONE 35D SH7.00)
L T
E 29A SH6.00)
DETAIL AJ
(ZONE 34 A SH7.00)
IL AB
27C SH6.00)
DETAIL L
(ZONE26A SH6.00)
LDW280-23533(REF)
DETAIL A A
(ZON. 15D SH4.00)
Y
H9.00)
(REF)
REF)

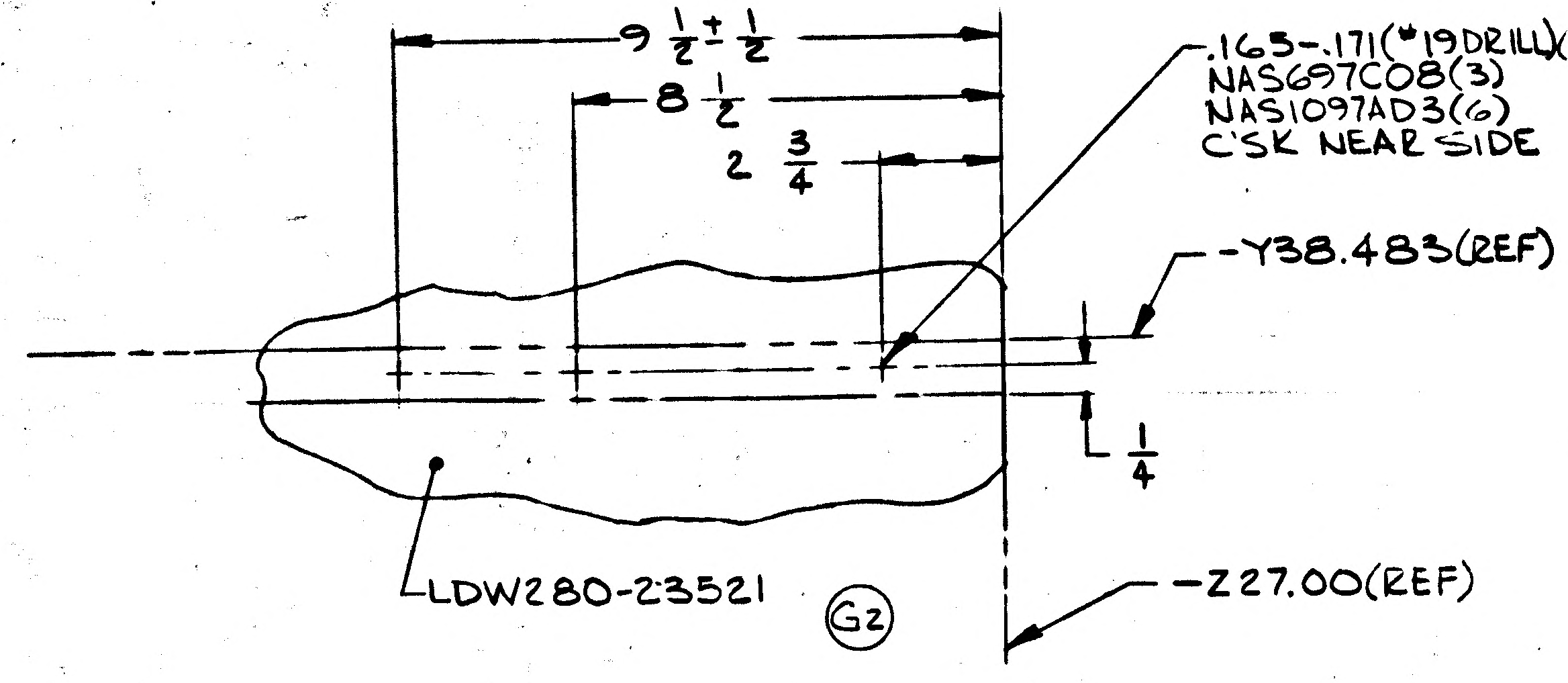
9 1/2 ± 1/2
8 1/2
2 3/4
.165-.171(#19DRILL)(3)
NAS697C08(3)
NAS1097AD3(6)
C'SK NEAR SIDE
-Y38.483(REF)
1/4
LDW280-23521
G2
-Z27.00(REF)

DETAIL CE (ON-3ONLY)

NOTES:

1 INSTALL FASTENERS PER LSP14-15302 & LSP14-15303

2. FOR HOLES MARKED ▲

3. ▲ SEE LSC270-818 FOR CORRESPONDING HOLE PATTERN

4. ▲ SEE LSC270-805 FOR CORRESPONDING HOLE PATTERN

5. ▲ SEE LSC270-817 FOR CORRESPONDING HOLE PATTERN

6. ▲ SEE LSC270-819 FOR CORRESPONDING HOLE PATTERN

7. ▲ SEE LSC270-813 FOR CORRESPONDING HOLE PATTERN

8. ▲ SEE LSC360-20210 FOR CORRESPONDING HOLE PATTERN

9. ▲ SEE LSC310-403 FOR CORRESPONDING HOLE PATTERN

10. ▲ SEE LSC360-624 FOR CORRESPONDING HOLE PATTERN

11. SHIM AS REQD USING AL ALLOY SH 2024-T3 QQ-A-250/4 FINISH 88

12. BOND IN ACCORDANCE WITH GB17B

13. GF510C-5 MAY BE USED AS ALTERNATES FOR MS20470DD4 & MS20470AD4 RIVETS. (INSTALL FASTENERS PER LSP14-15301A).

14. SHIM AS REQ'D USING 2024-T3 AL ALLOY SH QQ-A-250/4 FIN. 76.

02/02

NAS 9-1100

MANUFACTURING OPERATIONS

UNLESS OTHERWISE SPECIFIED NOTES CHECKED √ APPLY TO THIS DWG.

PART NUMBER AND ALL OTHER MARKINGS IN REGION MARKED ⊠ USE BOTH SIDES IF NECESSARY.	
FILLET AND INSIDE CORNER RADII TOLERANCES .016R TO .062R ± .010 .063R TO .250R ± .015 OVER .250R ± .030	
DEPTH SHOWN FOR TAPPED HOLES IS FULL THDS. 2-3 IMP THDS. BEYOND PERMISSIBLE.	
EXTERNAL THREAD LENGTH SHOWN INCLUDES 2 IMPERFECT THREADS MAX.	
DO NOT CADMIUM PLATE & PAINT HOLES OR SURFACES MARKED WITH DOUBLE ASTERISK.	
MISMATCH STEP OF ± .005 PERMISSIBLE DUE TO CHANGE OF CUTTERS AT INSIDE INTERSECTING SURFACES.	
DIAMETERS MARKED MUST BE CONCENTRIC WITHIN FULL INDICATOR READING	
HOLES MUST BE KEPT FREE OF CHROME PLATING SOLUTION.	
ALL DIMENSIONS SHOWN TO BE MET AFTER CADMIUM PLATING. THICKNESS OF PLATE .0003 MIN. TO .0005 MAX. MIN. THICKNESS TO BE .0002 ON THREADED AREAS. NO ALLOWANCE FOR PLATING IN HOLES	
125 √ SURFACE ROUGHNESS INCLUDING REAMED HOLES PER MIL-STD-10	
200 √ FOR ALL DRILLED HOLES	
REMOVE ALL BURRS. BREAK ALL EDGES .015-.031	
INSPECTION INFORMATION MINIMUM PERMISSIBLE AVERAGE EDGE DISTANCE MARKED IS 1 1/2 FASTENER DIA FROM FASTENER ℄	√
SYMBOL √ DENOTES SURFACE TO BE MACHINED	
UNLESS OTHERWISE SPECIFIED TOLERANCE ON FLANGES IS ± 1/32	
LENGTHS OF AN, NAS & MS AL ALY RIVETS SHORTER THAN 1 INCH ARE NOT SPECIFIED.	
TOLERANCE ON LOFTED DELINEATIONS IS	

DWG SIZE 40 X 63

PRINTING INFO ONLY

FULL SIZE SHEET AREA (58 X 42 X 64) 18.3 SQ. FT.

1/2 SIZE SHEET AREA (1/4 OF FULL) 4.5 SQ. FT.

PRINT TRIM LINE

LDW280-52587 G

LDW280-52587 G

GRUMMAN AIRCRAFT ENGRG CORP., BETHPAGE, L. I., NEW YORK				
SIZE K	CODE IDENT NO. 26512	LDW280-52587	G	
MODEL OR END ITEM	SCALE 1/5		SHEET 3.00	

2 FRAMES

SH 3

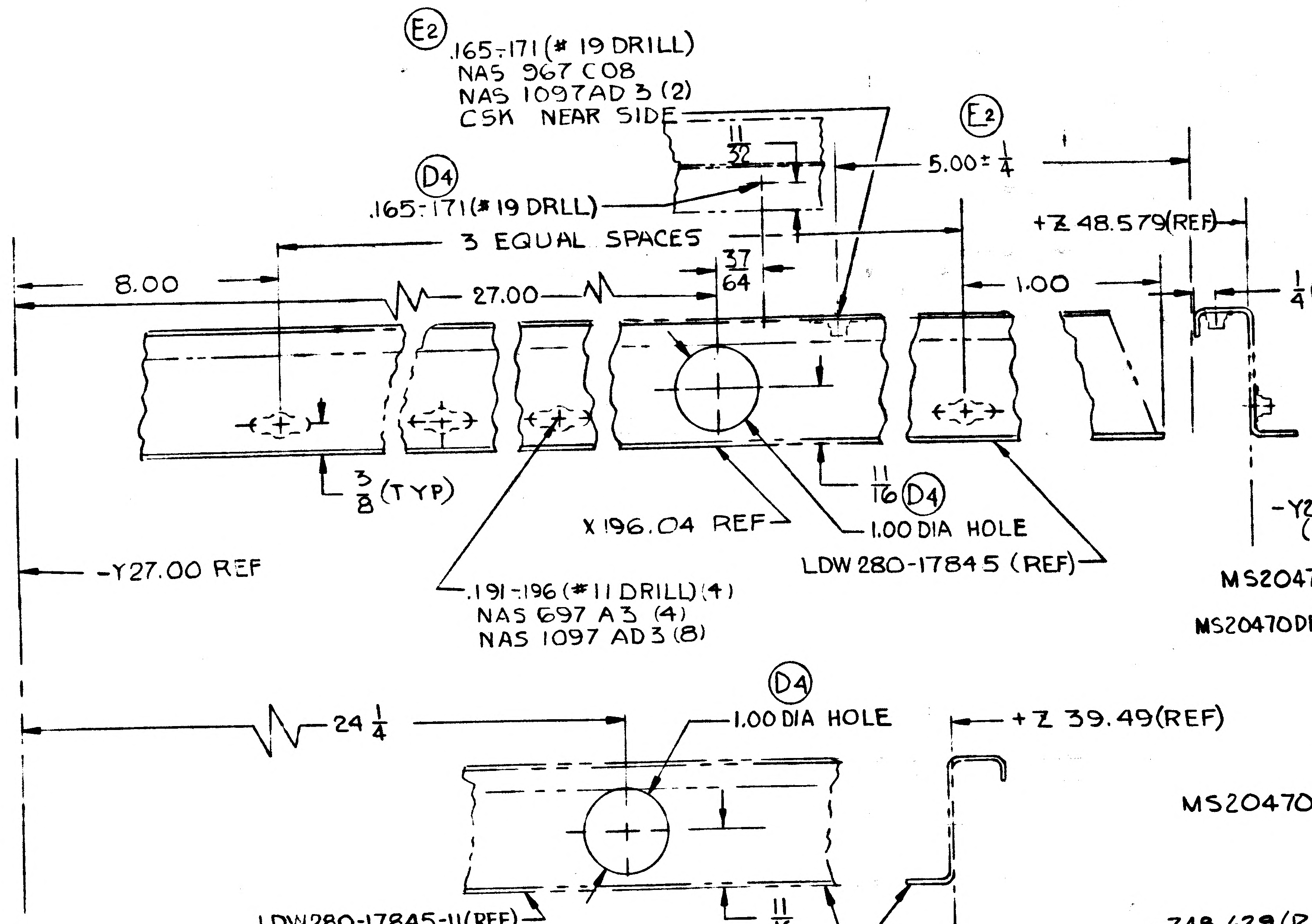

(E2) .165-.171 (# 19 DRILL)
NAS 967 C08
NAS 1097AD3 (2)
CSK NEAR SIDE
(D4) .165-.171 (# 19 DRILL)
3 EQUAL SPACES
11/32
37/64
(E2) 5.00 ± 1/4
+Z 48.579(REF)
8.00
27.00
1.00
1/4 (E2)
3/8 (TYP)
X 196.04 REF
11/16 (D4)
1.00 DIA HOLE
LDW 280-17845 (REF)
-Y27.00 REF
.191-.196 (#11 DRILL) (4)
NAS 697 A3 (4)
NAS 1097 AD3 (8)
(D4)
24 1/4
1.00 DIA HOLE
+Z 39.49(REF)
LDW280-17845-11(REF)
11/16
X 196.04 (REF)

DETAIL F (D4)
VIEW LOOKING OUTBD
(ZONE 7C SH 3.00)
NO SCALE

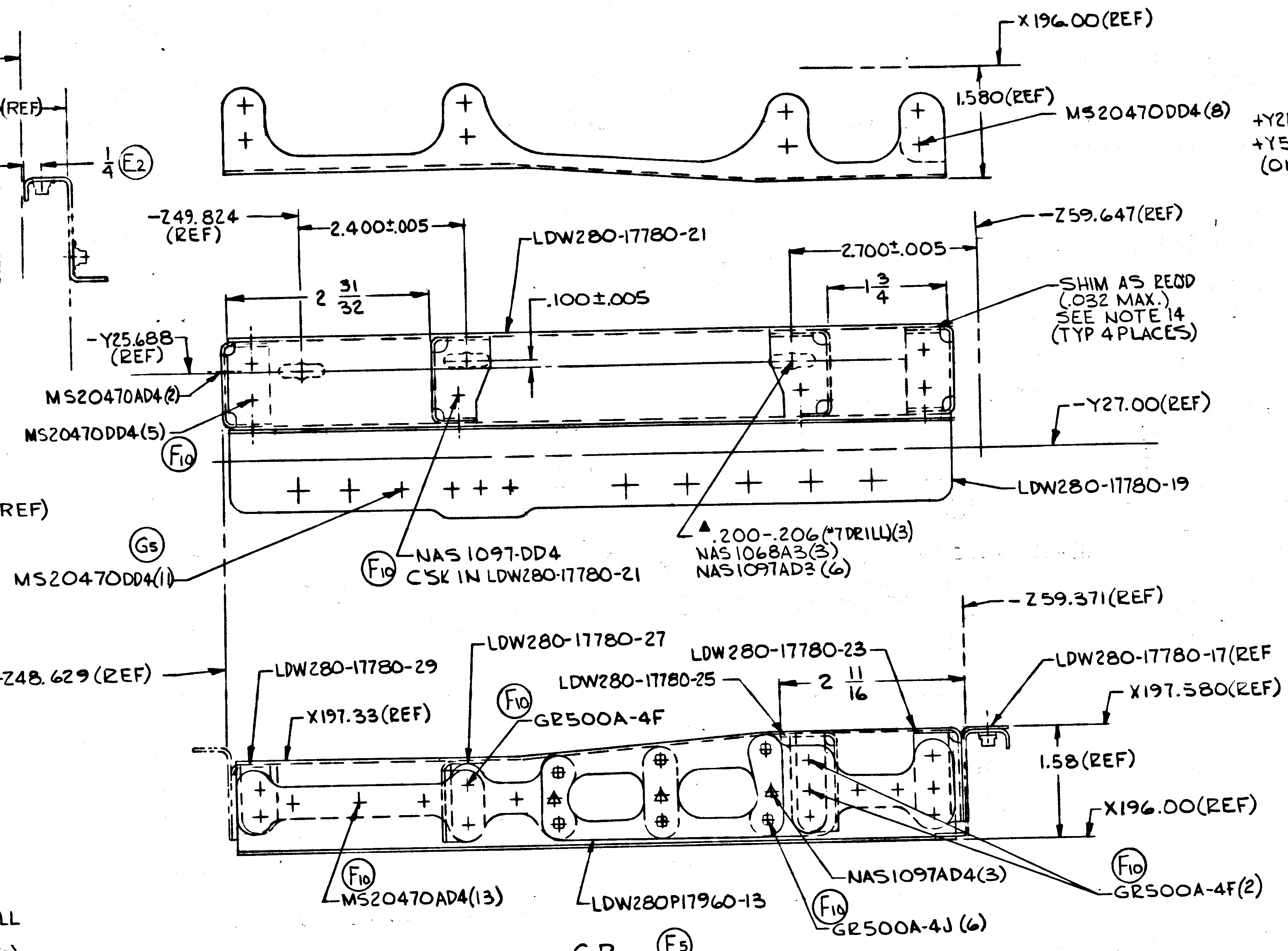

X 196.00 (REF)
1.580 (REF)
MS20470DD4 (8)
-Z49.824 (REF)
2.400±.005
LDW280-17780-21
-Z59.647(REF)
2.700±.005
1 3/4
2 31/32
.100±.005
SHIM AS REQD (.032 MAX.) SEE NOTE 14 (TYP 4 PLACES)
-Y25.688 (REF)
MS20470AD4(2)
MS20470DD4(5)
-Y27.00(REF)
(F10)
LDW280-17780-19
(G5)
MS20470DD4(1)
(F10) NAS 1097-DD4 C'SK IN LDW280-17780-21
.200-.206 (#7 DRILL)(3)
NAS 1068A3(3)
NAS 1097AD3 (6)
-Z59.371(REF)
-Z48.629 (REF)
LDW280-17780-29
LDW280-17780-27
LDW280-17780-23
LDW280-17780-17(REF
X197.33 (REF)
LDW280-17780-25
2 11/16
X197.580(REF)
(F10) GR500A-4F
1.58 (REF)
X196.00(REF)
(F10) MS20470AD4(13)
LDW280P17960-13
NAS1097AD4(3)
(F10) GR500A-4J (6)
(F10) GR500A-4F(2)

DETAIL CB (F5)
(ZONE 3B SH 3.00) (ON-3 ONLY)

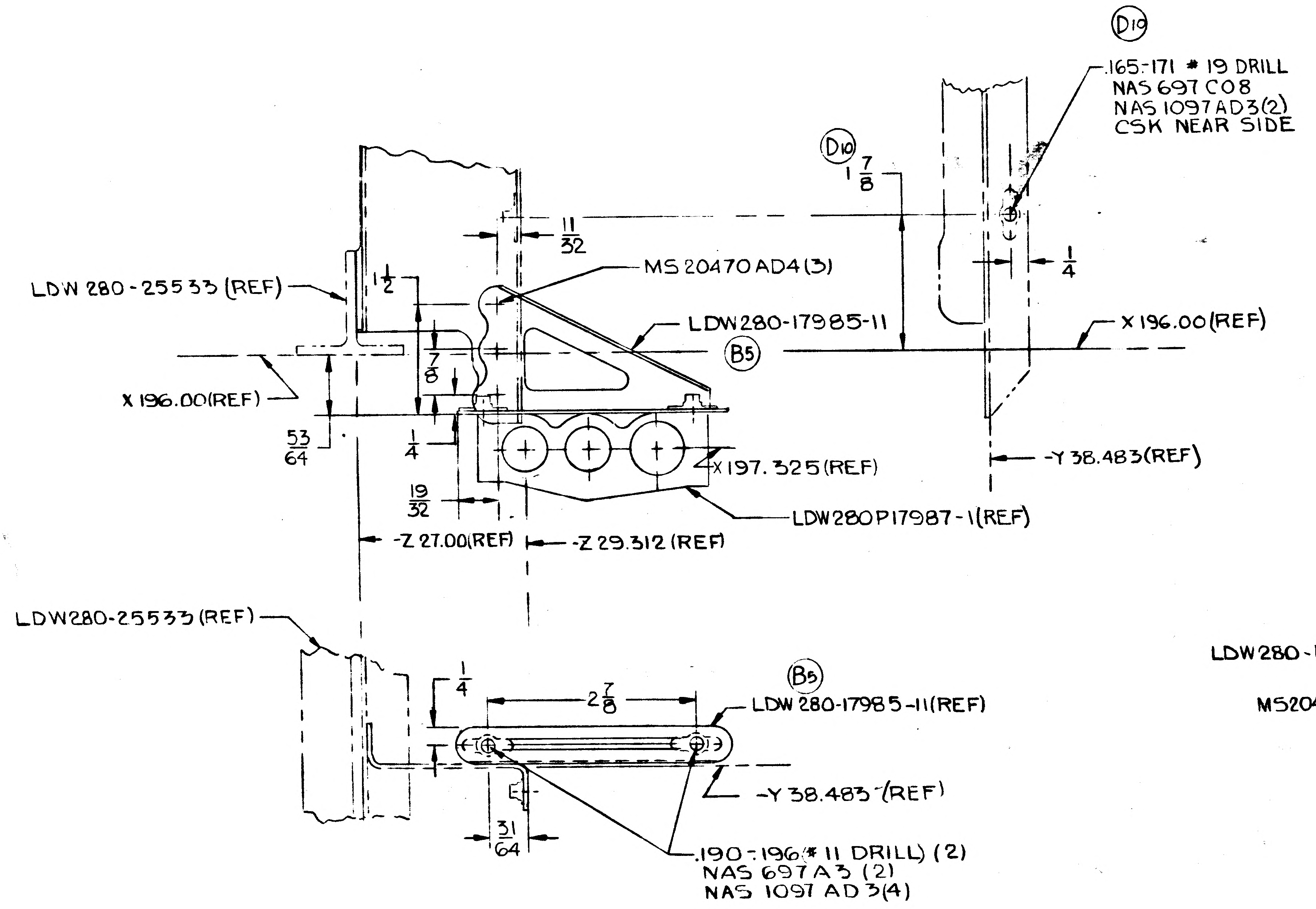

(D10)
.165-.171 # 19 DRILL
NAS 697 C08
NAS 1097AD3(2)
CSK NEAR SIDE
(D10) 1 7/8
11/32
1/4
MS20470 AD4(3)
LDW 280-25533 (REF)
1/2
LDW280-17985-11
(B5)
X 196.00(REF)
7/8
X196.00(REF)
53/64
1/4
19/32
X197.325(REF)
-Y 38.483(REF)
LDW280P17987-1(REF)
-Z 27.00(REF)
-Z 29.312 (REF)
LDW280-25533(REF)
1/4
2 7/8
(B5)
LDW 280-17985-11(REF)
-Y 38.483 (REF)
31/64
.190-.196 (#11 DRILL) (2)
NAS 697 A3 (2)
NAS 1097 AD3(4)

DETAIL G
(ZONE 5B SH 3.00)

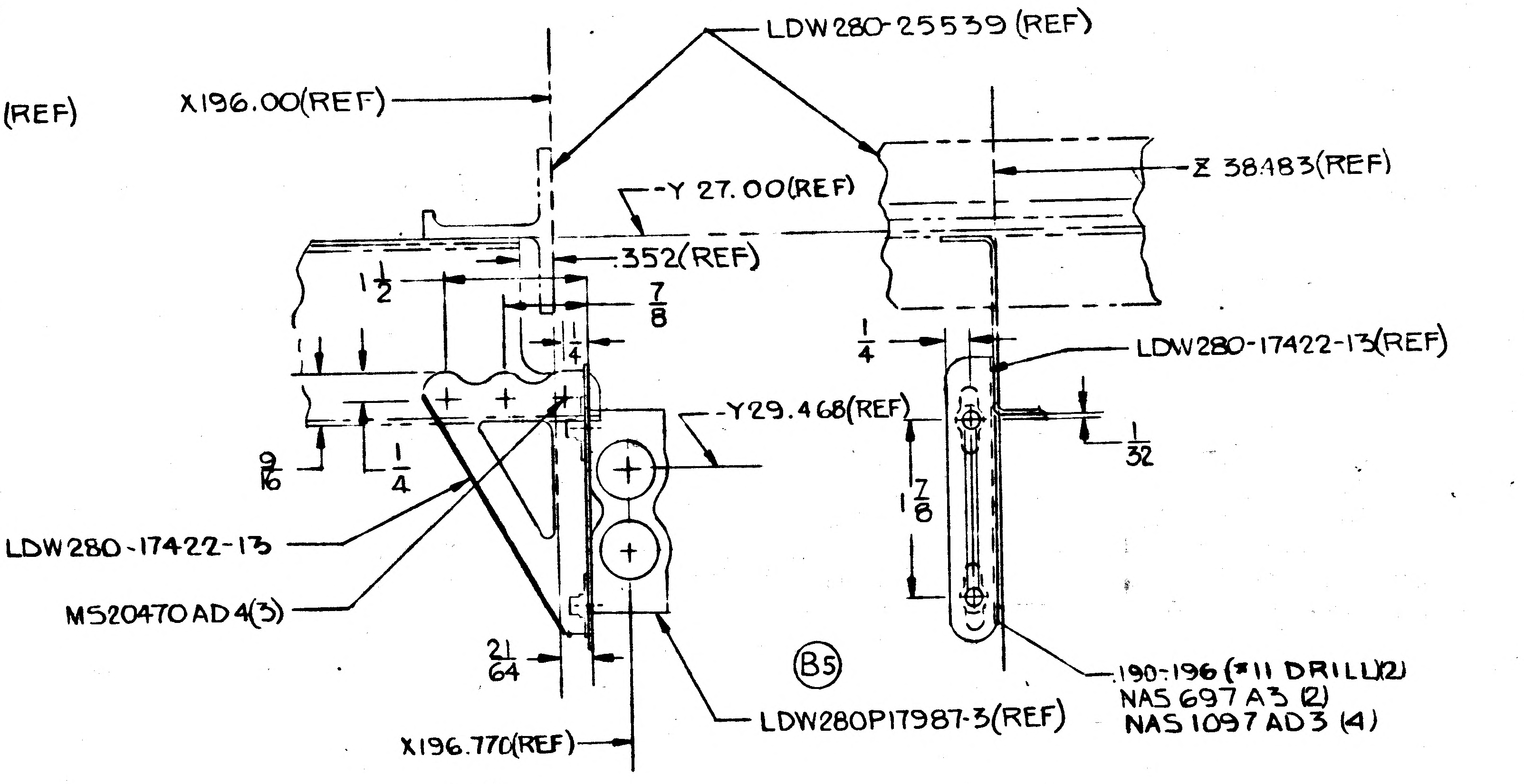

LDW280-25539 (REF)
X196.00(REF)
-Z 38.483(REF)
-Y 27.00(REF)
.352(REF)
1 1/2
7/8
1/4
LDW280-17422-13(REF)
-Y29.468(REF)
1/32
9/16
1/4
1 7/8
LDW280-17422-13
MS20470 AD4(3)
21/64
(B5)
X196.770(REF)
LDW280P17987-3(REF)
.190-.196 (#11 DRILL)(2)
NAS 697 A3 (2)
NAS 1097 AD3 (4)

DETAIL H
(ZONE 5B SH 3.00)

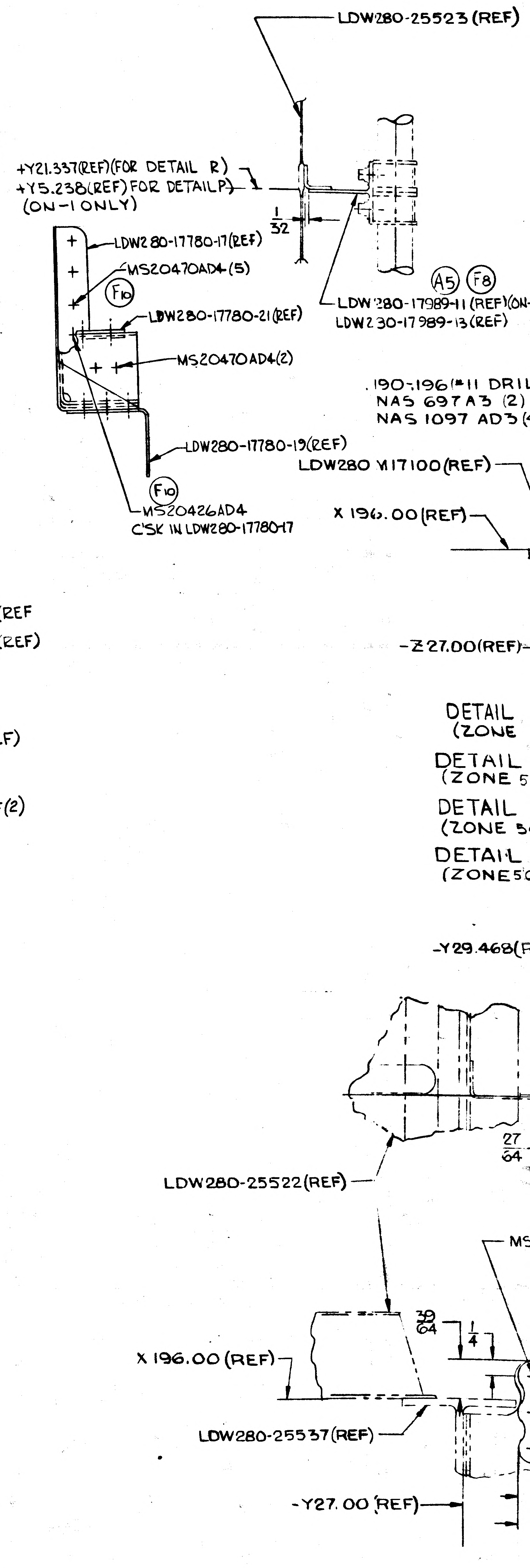

LDW280-25523 (REF)
+Y21.337(REF) (FOR DETAIL R)
+Y5.238(REF) FOR DETAIL P
(ON-1 ONLY)
1/32
LDW280-17780-17(REF)
MS20470AD4 (5)
(F10)
LDW280-17780-21(REF)
(A5) (F8)
LDW280-17989-11 (REF)
LDW280-17989-13 (REF)
MS20470AD4(2)
.190-.196 (#11 DRIL
NAS 697 A3 (2)
NAS 1097 AD3
LDW280-17780-19(REF)
LDW280 -17100(REF)
(F10) MS20426AD4
C'SK IN LDW280-17780-17
X 196.00 (REF)
-Z27.00(REF)
DETAIL
(ZONE
DETAIL
(ZONE 5
DETAIL
(ZONE 5
DETAIL
(ZONE 5
-Y29.468(
27/64
LDW280-25522(REF)
39/64
1/4
X 196.00 (REF)
LDW280-25537(REF)
-Y27.00 (REF)

01/02 NAS 9-1100

LDW280-52587 SH 5

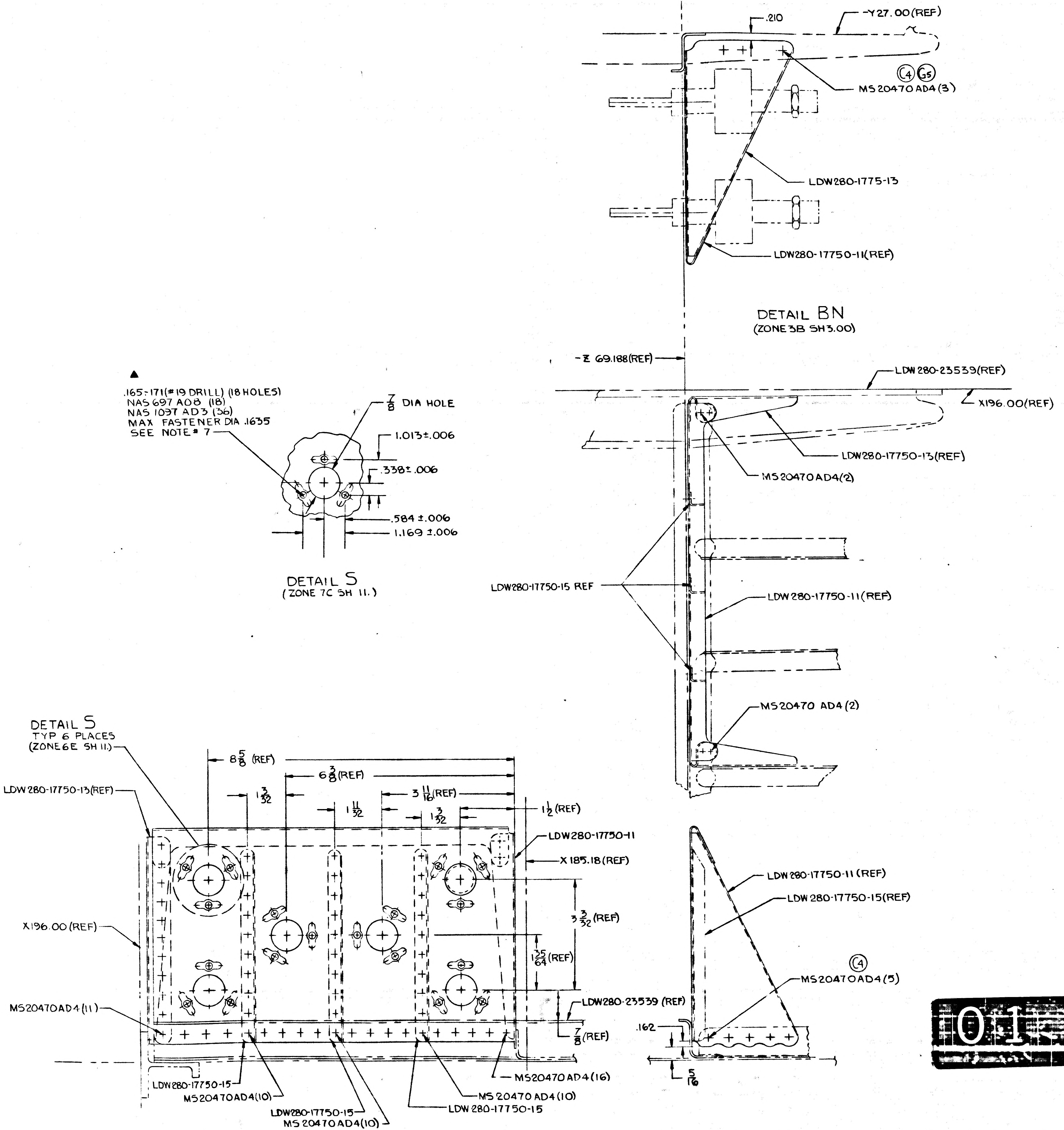
.210
Y27.00(REF)
C4
G5
MS20470AD4(3)
LDW280-1775-13
LDW280-17750-11(REF)
-Z 69.188(REF)
LDW280-23539(REF)
X196.00(REF)
LDW280-17750-13(REF)
MS20470AD4(2)
LDW280-17750-15 REF
LDW280-17750-11(REF)
MS20470 AD4(2)
.165-.171(#19 DRILL) (18 HOLES)
NAS 697 A08 (18)
NAS 1097 AD3 (36)
MAX FASTENER DIA .1635
SEE NOTE # 7
7/8 DIA HOLE
1.013±.006
.338±.006
.584±.006
1.169±.006
DETAIL S
TYP 6 PLACES
(ZONE 6E SH 11.)
8 5/8 (REF)
6 3/8(REF)
3 11/16(REF)
1 3/32
1 11/32
1 3/32
1 1/2 (REF)
LDW280-17750-13(REF)
LDW280-17750-11
X185.18(REF)
3 3/32 (REF)
1 25/64 (REF)
X196.00 (REF)
LDW280-23539 (REF)
7/8 (REF)
MS20470AD4(11)
LDW280-17750-15
MS20470AD4(10)
LDW280-17750-15
MS20470AD4(10)
MS20470AD4(10)
LDW280-17750-15
MS20470AD4(16)
LDW280-17750-11 (REF)
LDW280-17750-15(REF)
C4
MS20470AD4(5)
.162
5/16

DETAIL BN
(ZONE 3B SH 3.00)

DETAIL S
(ZONE 7C SH 11.)

MANUFACTURING OPERATIONS
UNLESS OTHERWISE SPECIFIED
NOTES CHECKED ✓ APPLY TO THIS DWG.

PART NUMBER AND ALL OTHER MARKINGS IN REGION MARKED ☒ USE BOTH SIDES IF NECESSARY.	
FILLET AND INSIDE CORNER RADII TOLERANCES .016R TO .062R ± .010 .063R TO .250R ± .015 OVER .250R ± .030	
DEPTH SHOWN FOR TAPPED HOLES IS FULL THDS. 2-3 IMP. THDS. BEYOND PERMISSIBLE	
EXTERNAL THREAD LENGTH SHOWN INCLUDES 2 IMPERFECT THREADS MAX.	
DO NOT CADMIUM PLATE & PAINT HOLES OR SURFACES MARKED WITH DOUBLE ASTERISK.	
MISMATCH STEP OF ± .005 PERMISSIBLE DUE TO CHANGE OF CUTTERS AT INSIDE INTERSECTING SURFACES.	
DIAMETERS MARKED MUST BE CONCENTRIC WITHIN FULL INDICATOR READING	
HOLES MUST BE KEPT FREE OF CHROME PLATING SOLUTION.	
ALL DIMENSIONS SHOWN TO BE MET AFTER CADMIUM PLATING. THICKNESS OF PLATE .0003 MIN TO .0005 MAX. MIN THICKNESS TO BE .0002 ON THREADED AREAS. NO ALLOWANCES FOR PLATING IN HOLES	
125 √ SURFACE ROUGHNESS INCLUDING REAMED HOLES PER MIL-STD-10	
200 √ FOR ALL DRILLED HOLES	
REMOVE ALL BURRS. BREAK ALL EDGES .015-.031	
INSPECTION INFORMATION MINIMUM PERMISSIBLE AVERAGE EDGE DISTANCE MARKED IS	
SYMBOL √ DENOTES SURFACE TO BE MACHINED	
UNLESS OTHERWISE SPECIFIED TOLERANCE ON FLANGES IS ± 1/32	
LENGTHS OF AN, NAS & MS AL ALY RIVETS SHORTER THAN 1 INCH ARE NOT SPECIFIED	
TOLERANCE ON LOFTED DELINEATIONS IS	

NAS 9-1100

LDW280-52587 G

GRUMMAN AIRCRAFT ENGRG CORP. BETHPAGE, L. I., NEW YORK				
LM	SIZE E	CODE IDENT NO. 26512	LDW280-52587	G
MODEL OR END ITEM	SCALE FULL		SHEET 10	

SUPPLEMENTARY DATA
UNLESS OTHERWISE SPECIFIED
NOTES CHECKED ✓ APPLY TO THIS DWG.

MARK PART NUMBER IN ACCORDANCE WITH MIL-STD-130	
PART NUMBER AND ALL OTHER MARKINGS IN REGION MARKED ☒ USE BOTH SIDES IF NECESSARY.	
LENGTHS OF AN, NAS & MS AL ALY RIVETS SHORTER THAN 1 INCH ARE NOT SPECIFIED.	
INSTALL RIVETS IN ACCORDANCE WITH	

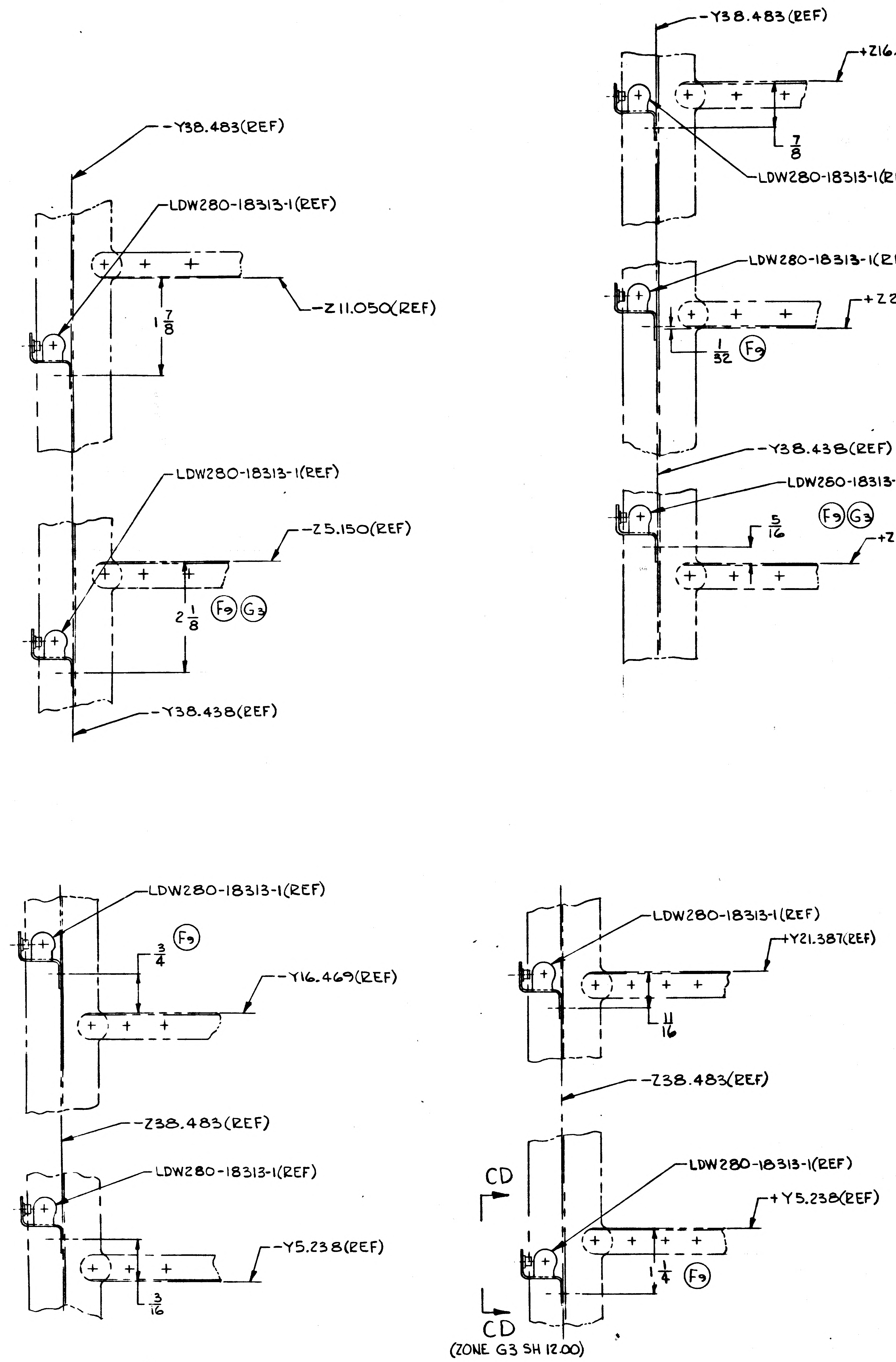
-Y38.483(REF)
LDW280-18313-1(REF)
-Z11.050(REF)
1 7/8
LDW280-18313-1(REF)
-Z5.150(REF)
2 1/8
F9
G3
-Y38.438(REF)
-Y38.483(REF)
+Z16.444(REF)
7/8
LDW280-18313-1(REF
LDW280-18313-1(REF)
+Z21.334(REF)
1/32
F9
-Y38.438(REF)
LDW280-18313-1(REF)
5/16
F9
G3
+Z5.150(REF)
LDW280-18313-1(REF)
3/4
F9
-Y16.469(REF)
-Z38.483(REF)
LDW280-18313-1(REF)
-Y5.238(REF)
3/16
LDW280-18313-1(REF)
+Y21.387(REF)
11/16
-Z38.483(REF)
CD
LDW280-18313-1(REF)
+Y5.238(REF)
1/4
F9
CD
(ZONE G3 SH 12.00)

DETAIL BZ (ON-3 ONLY)
(ZONE 5C SH 3.00)

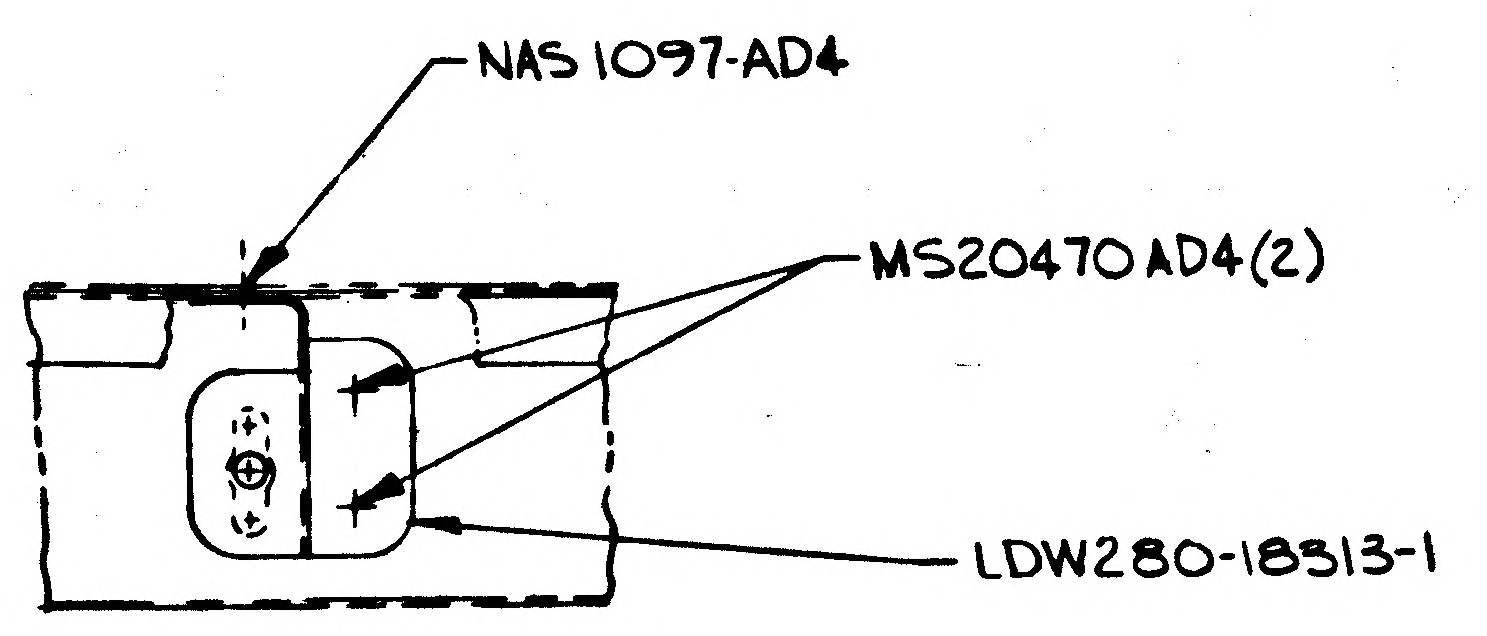
NAS1097-AD4
MS20470AD4(2)
LDW280-18313-1

VIEW CD (ON-3 ONLY)
(TYP 9 PLACES)
(ZONE B6 SH 12.00)

G1

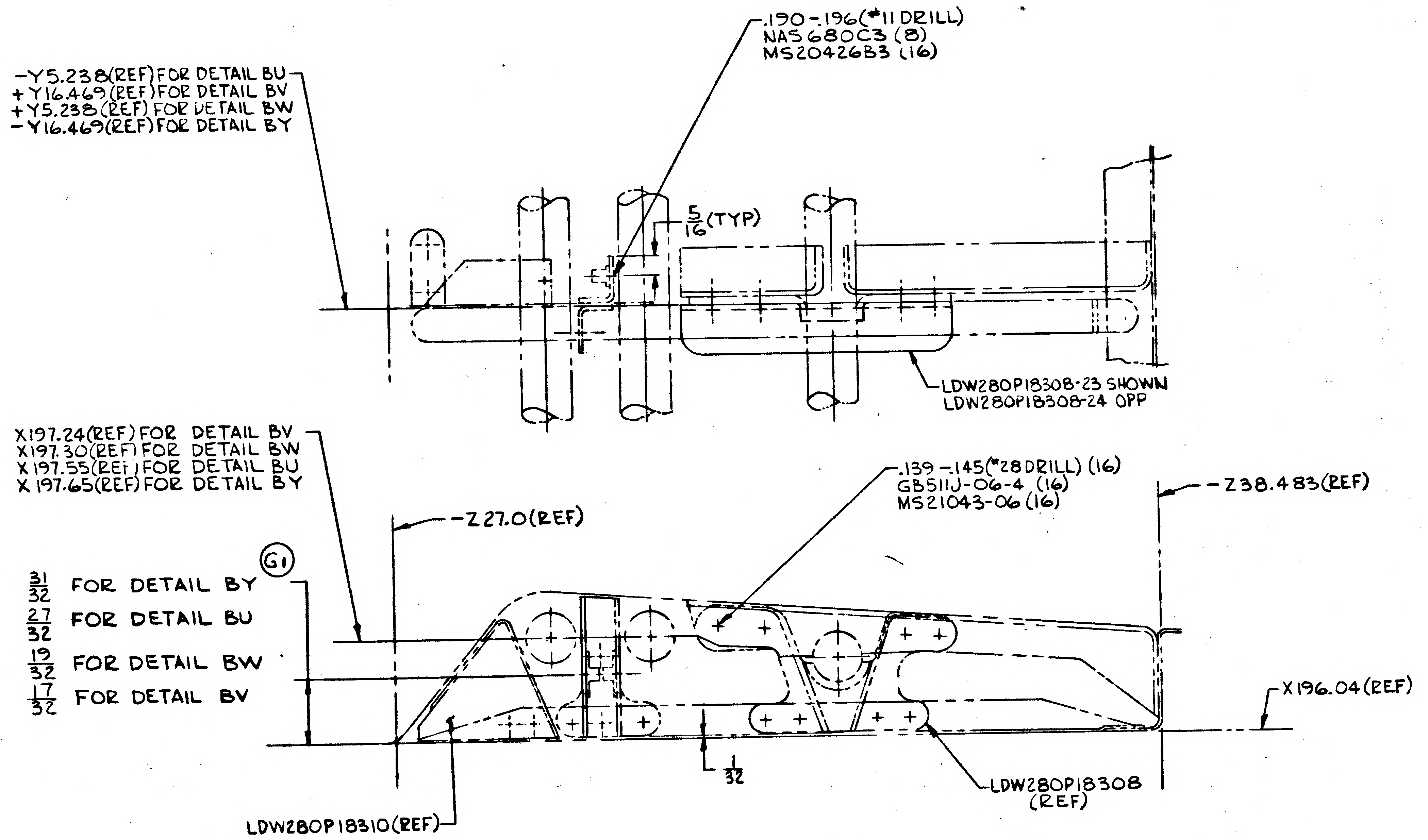
.190-.196(#11 DRILL)
NAS680C3 (8)
MS20426B3 (16)
-Y5.238(REF) FOR DETAIL BU
+Y16.469(REF) FOR DETAIL BV
+Y5.238(REF) FOR DETAIL BW
-Y16.469(REF) FOR DETAIL BY
5/16 (TYP)
LDW280P18308-23 SHOWN
LDW280P18308-24 OPP
X197.24(REF) FOR DETAIL BV
X197.30(REF) FOR DETAIL BW
X197.55(REF) FOR DETAIL BU
X197.65(REF) FOR DETAIL BY
.139-.145(#28 DRILL) (16)
GB511J-06-4 (16)
MS21043-06 (16)
-Z38.483(REF)
-Z27.0(REF)
31/32 FOR DETAIL BY
G1
27/32 FOR DETAIL BU
19/32 FOR DETAIL BW
17/32 FOR DETAIL BV
X196.04(REF)
1/32
LDW280P18308
(REF)
LDW280P18310(REF)

DETAIL BU SHOWN F8
(ZONE 5C SH 3.00)(ON-3 ONLY)

DETAIL BV (IDENT TO DETAIL BU EXCEPT AS NOTED)
(ZONE 5C SH 3.00)(ON-3 ONLY)

DETAIL BW (OPP OF DETAIL BU EXCEPT AS NOTED)
(ZONE 5C SH 3.00)(ON-3 ONLY)

DETAIL BY (OPP OF DETAIL BU EXCEPT AS NOTED)
(ZONE 5B SH 3.00)(ON-3 ONLY)

01 NAS 9-1100

GRUMMAN AIRCRAFT ENGINEERING CORPORATION
BETHPAGE, NEW YORK 11714

SIZE	CODE IDENT NO		
E	26512	LDW280-52587	G
SCALE FULL		SHEET 12.00	

ENG 73.4 REV. 5-67

LDW280-52587 H

MODEL OR END ITEM	NEXT ASSY	MODULE OR SER NO. GAEC SCH NO.	REQD PER MODULE OR END ITEM
PART NO.			

MODEL OR END ITEM	NEXT ASSY	MODULE OR SER NO.	REQD PER MODULE OR END ITEM
LFM420-2370-003			
LDW420-2370	LDW280-53509	SER NO. 1	1
LM	LDW280-53509	LM-3 (33)	1
PART NO. LDW280-52587-3		GAEC SCH NO.	

MODEL OR END ITEM	NEXT ASSY	MODULE OR SER NO.	REQD PER MODULE OR END ITEM
LM	LDW280-52509	LM-2 (32)	1
PART NO. LDW280-52587-1		GAEC SCH NO. 50-2	

WORK PKG FUNCTION NO. 110 5

SH REV STATUS: FOR DESCRIPTION OF REV SEE SUBQ SH

SHEET	1.00	1.10	1.11	1.12	1.13	1.14	2.00	2.01	2.02
REV	H	E	E	G	G	H	H	H	H
SHEET	2.03	2.04	3.00	4.00	5.00	6.00	7.00	8.00	9.00
REV	H	H	H	F	H	F	F	H	H
SHEET	10.00	11.00	12.00	13.00	14.00				
REV	H	G	G	H	H				

LAST SECT LTR USED CK

LAST DASH NO. USED -3

GRUMMAN REL INFO H

PRIM NO. 207 JKD 16H-5/13/H

UNLESS OTHERWISE SPECIFIED DIMENSIONS ARE IN INCHES.

TOLERANCE UNLESS SPECIFIED FRACTIONS - DECIMALS - ANGLES ± 1/32 ±.020 ± 1/2°

ORIG DWG AUTH

DETAIL SPEC REQUIREMENT

CLASS II ENGRG CHANGE

CLASS I ENGRG CHANGE

CONTRACT NO. NAS 9-1100

LINE ITEM

DOCUMENTATION TYPE II

DRAWN BY A LITVINOFF 3/2/67

RELIABILITY

LAYOUT BY G. MOUGUIN

CHECKED BY M 3-14-67

~~R LEADER~~

VEH DES INT 3/18/67

STRUCTURES 3/23/67

STRUCTURES EB 3/25

WEIGHTS

PROJ ENGR 3-24-67

REL GROUP 8/4/67

GRUMMAN AIRCRAFT ENGRG CORP
BETHPAGE, L. I., NEW YORK

SUPPORT INSTL
DESCENT STAGE - UPPER DECK -
HE DISTR-FUEL-OX-H_2O & GLYCOL LINE

SIZE B

CODE IDENT NO. 26512

LDW280-52587 H

SCALE NONE

SHEET 1.00 OF 23

NG 77.1 12-65

01

NAS 9-1100

REVISIONS

FOR CONTINUATION OF REVISIONS SEE SHEET ______

CHANGE LTR	ITEM NO.	SHEET NO.	ZONE	GRUMMAN INFO ONLY	DET SPEC	CLASS I	CLASS II	ENGRG ORDER	DESCRIPTION	EFFECTIVITY	DISPOSITION OF EXISTING PARTS REWORK	DISPOSITION OF EXISTING PARTS SCRAP	CHANGED BY AND DATE	ENGRG APPD	APPD
G	6	5.00 3.00	22C 3B				✓	LCD1533	REF EO F5. IN DESCRIPTION OF EO "ADDED LDW280-17780-19-21,-23,-25&-27 S/B ADDED LDW280-17780-19,-21,-23-25-27&-29. ADDED SH 1.14	LM-3(33)	✓		G.ENGEL OCT 14, 1967		
	7.					✓		LCD1244	REF EO F8. IN DESCRIPTION & FLD OF EO LDW280-17424-13 S/B LDW280-17989-13	LM-3(33)	✓				
	8			P		✓		LCD1244 CCA667	REF EO G5. IN DESCRIPTION & FLD OF EO "REMOVED MS20470AD4 (5), ADDED MS20426AD4(3) S/B "REMOVE MS20470AD4 2 PLS ✦	LM-3(33) LDW420-2370 SER NO 1	✓				
	9	1.12					✓		REF EO F6 DETAIL AA IN FLD, OF EO S/B DETAIL AL	LM-3	✓				
H	1	1.00, 1.14 8.00, 9.00	47D 52D			✓		EO-H1 LCD-1244, CCA-667	ON-3, RELOCATED NAS697C08 & NAS1097AD3(2), 5 1/2 WAS 2 1/4 IN DETAIL B-B & 5 1/2 WAS 3 1/8 IN DETAIL AP.	LM-3	✓		R. LAMBERT 5-7-68		
	2	1.14, 2.00, 2.02, 5.00 10.00	18B 62A				✓	EO-H2	ON-1 & -3, REMOVED LDW280-17905-11,-15,-17 & -19. REMOVED ON-3: LDW280-17424-11 & -13.	LM-2 & -3 SER.NO.1					
	3	1.14, 8.00	43D				✓	EO-H3	ON-3, FIELD, VIEW AS "19 WAS 22", RELOCATED NAS697C08	LM-3					
	4	1.14, 2.01, 2.03, 10.00 13.00, 2.04 3.00	64D 65B			✓		EO-H4 LCD-2721 CCA-959	ON-3, ADDED DETAIL CF, CG, LDW280-17904-17 & -19, LDW280-18549-11, MS27039C0814(2), AN960C8L(2), NAS697C08(4), MS20470AD3, DRILL NO 19(4). REMOVED FROM-3: LDW280-17904-11, LDW280-17904-13 & ASSOCIATED HARDWARE. ADDED SHEET 13.00						
	5	1.14, 2.00, 2.03, 2.04, 13.00					✓	LCD-2721 OK	ON-3, ADDED LDW280-18316-11,-13-16 & -23, GB511J-06-4(1), GB511J-06-5(2) NAS697C06L(3), MS20470AD4(15) & VIEW CH-CH & SECT. CJ-CJ & AN960C6L(3)	LM-3					
	6	1.14, 9.00	52D			✓		LCD-1244 CCA-667	REF. EO-H1, FOR DETAIL B-B DIM. 5 1/2 WAS 2 1/4 S/B 5 1/2 WAS 41 CORRECTED COORDINATE -Z 27.00(REF) S/B +Z 27.00(REF) RM	LM-3	✓				
	7	1.00, 1.14 2.02, 2.03 2.04				✓		LCD-2721 CCA959 ok	ON-3 ADDED LDW280-18316-15,-17,-19,-21 & -25, GB511J-06-4(1), GB511J-06-5(2), MS20426AD3(6), MS20470AD4(13), NAS697C06L(3), AN960C6L(3) & VIEW CK-CK. ADDED SH 14.00, SH 1.00 OF 23 WAS SH 1.00 OF 22. WCG 11B	LM-3	✓				

CHG APPROVED

LTR	GROUP LDR	VEH DES INT	STRUCTURES	STRUCTURES	WEIGHTS	RELIABILITY
G	9/24	9/24		EB 10/25		
H	5/2/68	5/8/68	WH 5/11/68			

GRUMMAN AIRCRAFT ENGRG CORP., BETHPAGE, L. I., NEW YORK

SIZE	CODE IDENT NO.		
B	26512	LDW280-52587	H

SCALE NONE SHEET 1.14

01

NAS 9-11C0

QTY PER ASSEMBLY -3	QTY PER ASSEMBLY -1	PART NO.	I&T	CODE IDENT	NOMENCLATURE OR DESCRIPTION	MATERIAL	GOVT SPEC	COML SPEC	STOCK SIZE	PROCESS SYM	FINISH NO.	ZONE
1		LDW280-17780-29	E		BRACKET	SEE DWG						22C
1	1	LDW280-17781-17	↑		ANGLE	SEE DWG						44A
1	1	LDW280-17781-15			ANGLE	↑						44A
1	1	LDW280-17781-13			CHANNEL							44A
1	1	LDW280-17781-11			CHANNEL							44A
1		LDW280-17780-27			BRACKET							22C
1	1	LDW280-17780-17			BRACKET							29C
	1	LDW280-17780-13			CLIP							30C
	1	LDW280-17780-11			BRACKET							30C
1		LDW280-17780-25			BRACKET							22C
1	1	LDW280-17778-19			CLIP							27B
1	1	LDW280-17778-17			BRACKET							27B
1	1	LDW280-17778-15			ANGLE							27B
1		LDW280-17780-23			ANGLE							22C
3	3	LDW280-17750-15			ANGLE							6A
1	1	LDW280-17750-13			CHANNEL							36
1	1	LDW280-17750-11			BRACKET							4C
1		LDW280-17780-21			BRACKET							22D
1	1	LDW280-17560-13			BRACKET							44A
1	1	LDW280-17560-11			BRACKET							44A
1		LDW280-17780-19			ANGLE							21C
1	1	LDW280-17425-19			CLIP							32D
1		LDW280-18316-16			BRACKET							SH.13
1		LDW280-18316-13			CHANNEL							SH.13
1		LDW280-18316-11			CHANNEL							SH.13
		LDW280-52587-3			SUPPORT INSTL							
1	1	LDW280-17422-15			BRACKET							20A
1	1	LDW280-17422-13			BRACKET							23A
1	1	LDW280-17190-11			ANGLE	↓						13D
1	1	LDW260-17178-11	↓		BRACKET	SEE DWG						13D
		LDW280-52587-1	E		SUPPORT INSTL							

SYM OR NO.	PROCESS SYM OR FINISH NO.	GRUMMAN SPEC OR MILITARY SPEC	SYM OR NO.	PROCESS SYM OR FINISH NO.	GRUMMAN SPEC OR MILITARY SPEC	SYM OR NO.	PROCESS SYM OR FINISH NO.	GRUMMAN SPEC OR MILITARY SPEC

I&T: IDENTIFICATION AND TRACEABILITY IN ACCORDANCE WITH NONE

GRUMMAN AIRCRAFT ENGRG CORP., BETHPAGE, L. I., NEW YORK

SIZE	CODE IDENT NO.		
B	26512	LDW280-52587	H

SCALE NONE SHEET 2.00

ENG 77.2 5-64

01

NAS 9-1100

-3	-1	PART NO.	I&T	CODE IDENT	NOMENCLATURE OR DESCRIPTION	MATERIAL	GOVT SPEC	COML SPEC	STOCK SIZE	PROCESS SYM	FINISH NO.	ZONE
1		LDW280-17904-19	E		BRACKET	SEE DWG						SH.13
1		LDW280-17904-17	E		BRACKET	SEE DWG						SH.13
1	1	LDW280-17904-15	E		PLATE	SEE DWG						27B
	1	LDW280-17904-13			BRACKET							64D
	1	LDW280-17904-11			BRACKET							65B
1		LDW280-18549-11			FITTING							SH 13
1		LDW280-17901-25			ANGLE							11C
1	1	LDW280-17902-13			BRACKET							34D
1		LDW280-17901-23			CHANNEL							11C
1	4	LDW280-17901-19			CLIP							12A&D
1	1	LDW280-17901-17			CHANNEL							12A
1	1	LDW280-17901-15			CHANNEL							12B
	1	LDW280-17901-13			CHANNEL							12C
1	1	LDW280-17901-11			CHANNEL							12D
1		LDW280-17901-21			CHANNEL							12C
4	4	LDW280-17877-17			CLIP							61D
1	1	LDW280-17877-11			BRACKET							15D
1		LDW280-17871-19			BRACKET							47A
1	1	LDW280-17871-18			ANGLE							47A
1	1	LDW280-17871-17			ANGLE							47A
	1	LDW280-17871-15			BRACKET							47A
1	1	LDW280-17855-17			CLIP							29A
1	1	LDW280-17855-15			BRACKET							29A
1	1	LDW280-17855-13			BRACKET							29B
1	1	LDW280-17855-12			BRACKET							29B
1	1	LDW280-17855-11			BRACKET							29B
1	1	LDW280-17784-11	E		SUPPORT	SEE DWG						65A

QTY PER ASSEMBLY

SYM OR NO.	PROCESS SYM OR FINISH NO.	GRUMMAN SPEC OR MILITARY SPEC	SYM OR NO.	PROCESS SYM OR FINISH NO.	GRUMMAN SPEC OR MILITARY SPEC	SYM OR NO.	PROCESS SYM OR FINISH NO.	GRUMMAN SPEC OR MILITARY SPEC

I & T: IDENTIFICATION AND TRACEABILITY IN ACCORDANCE WITH NONE

GRUMMAN AIRCRAFT ENGRG CORP., BETHPAGE, L. I., NEW YORK

SIZE	CODE IDENT NO.		
B	26512	LDW280-52587	H

SCALE NONE

SHEET 2.01

ENG 77.2 5-64

01

NAS 9-1100

-3	-1	PART NO.	I&T	CODE IDENT	NOMENCLATURE OR DESCRIPTION	MATERIAL	GOVT SPEC	COML SPEC	STOCK SIZE	PROCESS SYM	FINISH NO.	ZONE
2		LDW280P18308-24	E		ANGLE	SEE DWG						2D
2		LDW280P18308-23	E		ANGLE	SEE DWG						2D
9		LDW280-18313-1	E		BRACKET ASSY	SEE DWG						2G
1	1	LDW280-18065-43	E		BRACKET	SEE DWG						61B
1	1	LDW280M17603-1	E		FITTING	SEE DWG						61A
1	1	LDW280M17291-1			FITTING							31A
2	2	LDW280M17290-1			FITTING							32A 61A
1	1	LDW280P17960-13			PLATE							29C
1	1	LDW280P17960-11			PLATE							27C
3	3	LDW280-17998-23			CLIP							45D
1		LDW280-18316-25			DOUBLER							SH14
	1	LDW280-17989-15			BRACKET							20C
1	2	LDW280-17989-13			BRACKET							18B
1	1	LDW280-17989-12			BRACKET							20C
2	2	LDW280-17989-11			BRACKET							18B
1	1	LDW280-17985-11			BRACKET							24B
1	1	LDW280-17984-11			BRACKET							36D
1	1	LDW280-17959-15			ANGLE							39D
1	1	LDW280-17959-13			ANGLE							40B
1	1	LDW280-17959-11			BRACKET							40C
1	3	LDW280-17958-15			PLATE							38B
1	1	LDW280-17958-13			CLIP							36D
1	1	LDW280-17905-21			BRACKET							34B
1	1	LDW280-17905-13			BRACKET							62A
1		LDW280-18316-23			CLIP							SH14
1		-21			STRAP							
1		-19			CHANNEL							
1		-17			CHANNEL							
1		LDW280-18316-15	E		BRACKET	SEE DWG						SH14

QTY PER ASSEMBLY

SYM OR NO.	PROCESS SYM OR FINISH NO.	GRUMMAN SPEC OR MILITARY SPEC	SYM OR NO.	PROCESS SYM OR FINISH NO.	GRUMMAN SPEC OR MILITARY SPEC	SYM OR NO.	PROCESS SYM OR FINISH NO.	GRUMMAN SPEC OR MILITARY SPEC

I & T: IDENTIFICATION AND TRACEABILITY IN ACCORDANCE WITH NONE

GRUMMAN AIRCRAFT ENGRG CORP., BETHPAGE, L. I., NEW YORK

SIZE	CODE IDENT NO.		
B	26512	LDW280-52587	H

SCALE NONE SHEET 2.02

ENG 77.2 5-64

01

NAS 9-1100

-3	-1	PART NO.	I&T	CODE IDENT	NOMENCLATURE OR DESCRIPTION	MATERIAL	GOVT SPEC	COML SPEC	STOCK SIZE	PROCESS SYM	FINISH NO.	ZONE
		MS20426B3	E		RIVET	STD PART						
4		NAS682C3	E		PLATE NUT	STD PART						
12		NAS680C3	E		PLATE NUT	STD PART						
		SEE NOTE #11	E		SHIM							
16		MS21043-06			NUT	STD PART						
1	1	NAS1330S3-116			RIVET	STD PART						
64	64	NAS20426AD3			RIVET							
300	284	NAS1097AD3			RIVET							
13		NAS1097AD4			RIVET							
26	23	NAS1068A3			PLATE NUT							
43	33	NAS697C08										
33	33	NAS697A08										
8	8	NAS697A06L										
73	77	NAS697 A3			PLATE NUT							
1	1	MS21266			GROMMET	SEE NOTE #12						
		MS20470 DD5			RIVET							
		MS20470 DD4										
		MS20470 AD4										
		MS20470 A4			RIVET	STD PART						
22		GR500A-G5			RIVET	GRUMMAN STD						
1	1	GR500A-4E			RIVET	GRUMMAN STD						
2	2	GG10A-12-2			GROMMET							
1	3	GG10A-12-1			GROMMET							
8	8	GG10A-10-1			GROMMET							
2	4	GF510C-5-2			RIVET							
18		GB511J-06-4			BOLT							
5	5	GB11D-8-76			CLIP							
1	1	GB11D-6-76			CLIP							
4	4	GB11D-2-76	E		CLIP	GRUMMAN STD						

QTY PER ASSEMBLY

SYM OR NO.	PROCESS SYM OR FINISH NO.	GRUMMAN SPEC OR MILITARY SPEC	SYM OR NO.	PROCESS SYM OR FINISH NO.	GRUMMAN SPEC OR MILITARY SPEC	SYM OR NO.	PROCESS SYM OR FINISH NO.	GRUMMAN SPEC OR MILITARY SPEC

I & T: IDENTIFICATION AND TRACEABILITY IN ACCORDANCE WITH NONE

GRUMMAN AIRCRAFT ENGRG CORP., BETHPAGE, L. I., NEW YORK

SIZE	CODE IDENT NO.		
B	26512	LDW280-52587	H (H)
SCALE NONE			SHEET 2.03

ENG 77.2 5-64

01

NAS 9-1100

QTY PER ASSEMBLY -3	-1	CODE IDENT	PART NO.	I&T	NOMENCLATURE OR DESCRIPTION	MATERIAL	GOVT SPEC	COML SPEC	STOCK SIZE	PROCESS SYM	FINISH NO.	ZONE
3			NAS697C06L	E	PLATE NUT	STD PART						
3			AN960C6L	E	WASHER	STD PART						
			MS20426AD3	E	RIVET	STD PART						
4			GB511J-06-5	E	BOLT	GRUMMAN STD.						
3			NAS697C06	↑	NUT	STD. PART						
2			MS27039C0814		PLATE NUT	↑						
			MS20470AD3		RIVET	↓						
2			AN960C8L	↓	WASHER	STD. PART						
6			GR500A-4J	E	RIVET	GRUMMAN STD						
3			GR500A-4F	E	RIVET	GRUMMAN STD						
1			NAS696C08	E	PLATE NUT	STD PART						
1			NAS1097DD4	E	RIVET	STD PART						

SYM OR NO.	PROCESS OR FINISH	GRUMMAN SPEC OR MILITARY SPEC	SYM OR NO.	PROCESS OR FINISH	GRUMMAN SPEC OR MILITARY SPEC	SYM OR NO.	PROCESS OR FINISH	GRUMMAN SPEC OR MILITARY SPEC

I & T: IDENTIFICATION AND TRACEABILITY IN ACCORDANCE WITH : NONE

GRUMMAN AIRCRAFT ENGRG CORP, BETHPAGE, L. I., NEW YORK

SIZE	CODE IDENT NO.		
B	26512	LDW280-52587	H

SCALE NONE

SHEET 2.04

H

ENG 77.2 7-65

01

NAS 9-1100

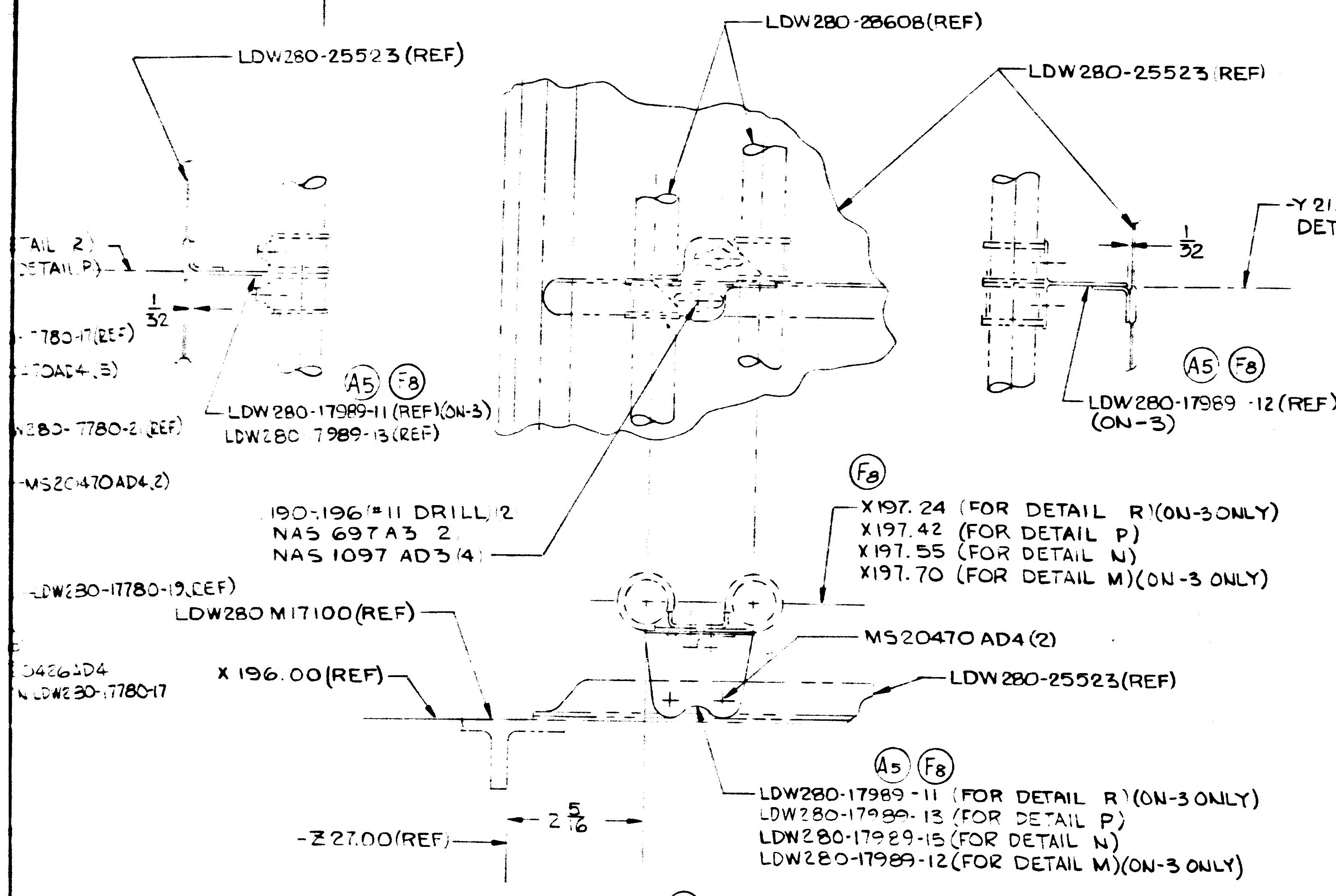

LDW280-25523 (REF)
LDW280-28608 (REF)
LDW280-25523 (REF)
-Y21.337 REF FOR DETAIL M (ON-3)
1/32
A5 F8
LDW280-17989-11 (REF) (ON-3)
LDW280-17989-13 (REF)
LDW280-17989-12 (REF) (ON-3)
A5 F8
MS20470AD4 (2)
F8
.190-.196 (#11 DRILL) (2)
NAS 697A3 (2)
NAS 1097 AD3 (4)
X197.24 (FOR DETAIL R) (ON-3 ONLY)
X197.42 (FOR DETAIL P)
X197.55 (FOR DETAIL N)
X197.70 (FOR DETAIL M) (ON-3 ONLY)
LDW280-17780-19 (REF)
LDW280 M17100 (REF)
MS20470 AD4 (2)
LDW280-25523 (REF)
X 196.00 (REF)
A5 F8
LDW280-17989-11 (FOR DETAIL R) (ON-3 ONLY)
LDW280-17989-13 (FOR DETAIL P)
LDW280-17989-15 (FOR DETAIL N)
LDW280-17989-12 (FOR DETAIL M) (ON-3 ONLY)
-Z 27.00 (REF)
2 5/16

DETAIL N (SHOWN) (F8)
(ZONE 5B SH 3.00)

DETAIL M (IDENT TO DETAIL (N) EXCEPT AS NOTED)
(ZONE 5B SH 3.00) (ON-3 ONLY)

DETAIL P (IDENT TO DETAIL (N) EXCEPT AS NOTED)
(ZONE 5C SH 3.00)

DETAIL R (IDENT TO DETAIL (N) EXCEPT AS NOTED)
(ZONE 5C SH 3.00) (ON-3 ONLY)

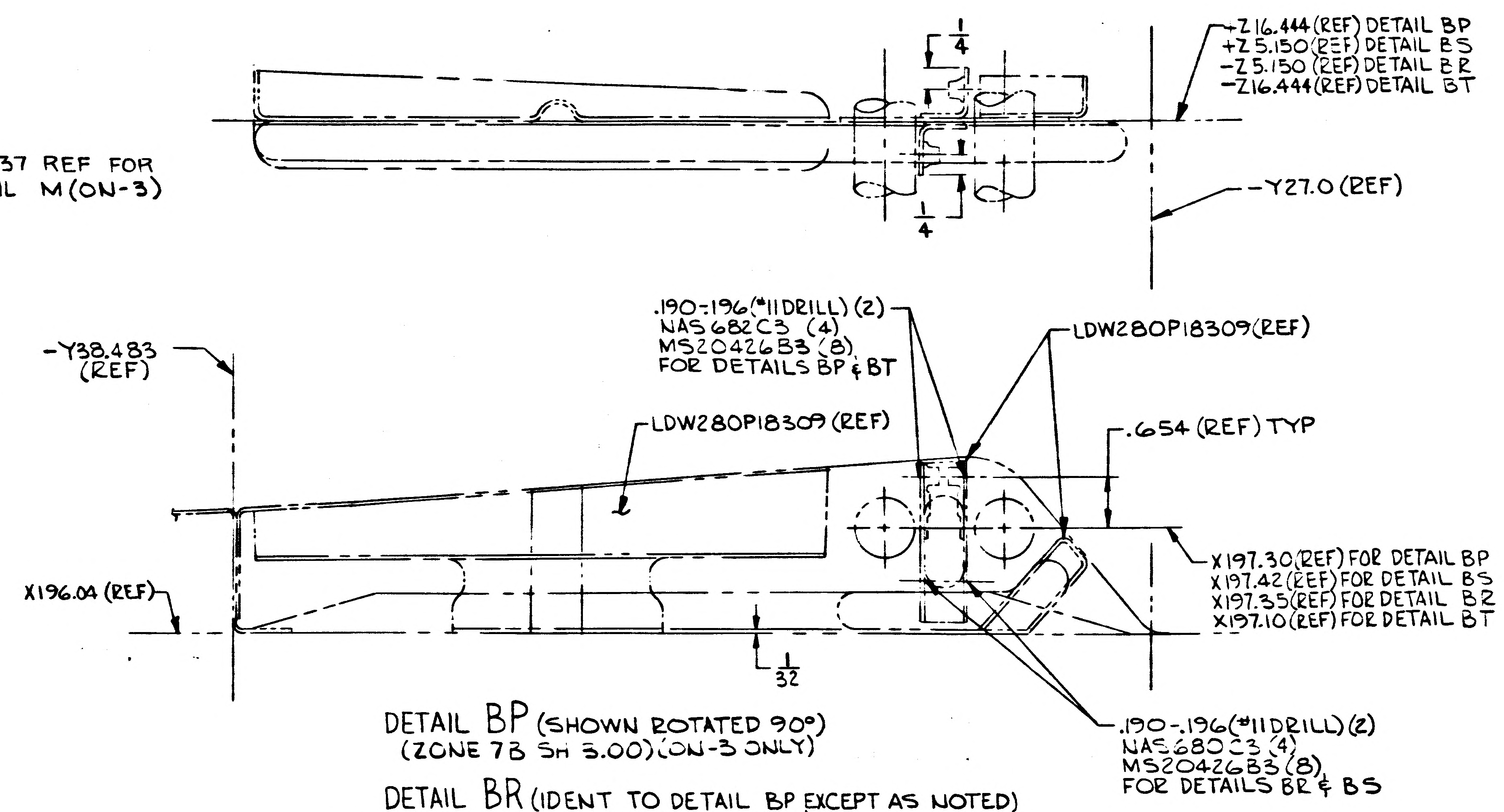

1/4
-Z16.444 (REF) DETAIL BP
+Z5.150 (REF) DETAIL BS
-Z5.150 (REF) DETAIL BR
-Z16.444 (REF) DETAIL BT
1/4
-Y27.0 (REF)
.190-.196 (#11 DRILL) (2)
NAS682C3 (4)
MS20426B3 (8)
FOR DETAILS BP & BT
LDW280P18309 (REF)
-Y38.483 (REF)
LDW280P18309 (REF)
.654 (REF) TYP
X196.04 (REF)
X197.30 (REF) FOR DETAIL BP
X197.42 (REF) FOR DETAIL BS
X197.35 (REF) FOR DETAIL BR
X197.10 (REF) FOR DETAIL BT
1/32
.190-.196 (#11 DRILL) (2)
NAS680C3 (4)
MS20426B3 (8)
FOR DETAILS BR & BS

DETAIL BP (SHOWN ROTATED 90°)
(ZONE 7B SH 3.00) (ON-3 ONLY)

DETAIL BR (IDENT TO DETAIL BP EXCEPT AS NOTED)
(ZONE 6B SH 3.00) (ON-3 ONLY)

(F8) DETAIL BS (OPP TO DETAIL BP EXCEPT AS NOTED)
(ZONE 6B SH 3.00) (ON-3 ONLY)

DETAIL BT (OPP OF DETAIL BP EXCEPT AS NOTED) (ZONE 6C SH 3.00) (ON-3 ONLY)

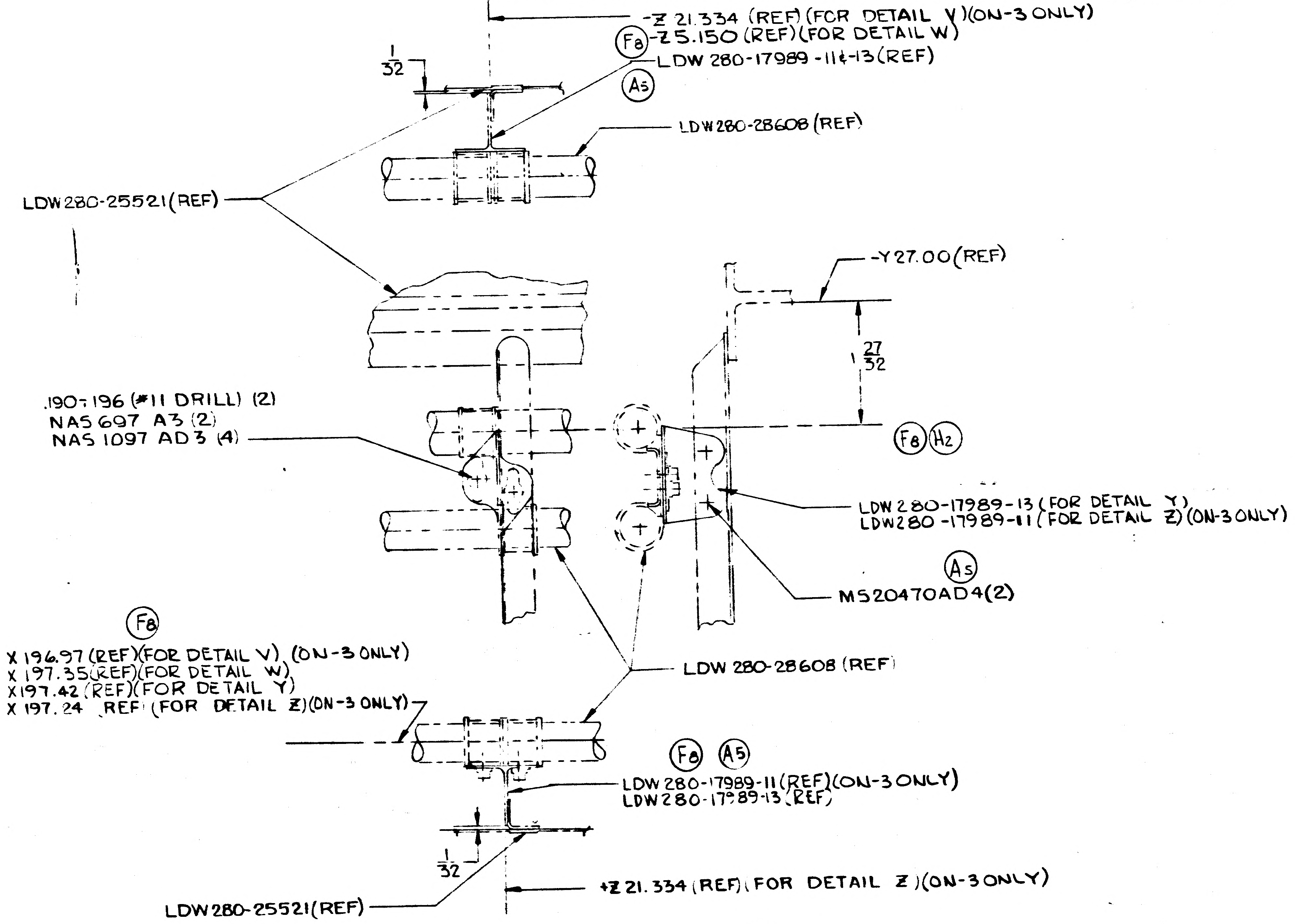

-Z 21.334 (REF) (FOR DETAIL Y) (ON-3 ONLY)
F8 -Z5.150 (REF) (FOR DETAIL W)
LDW 280-17989-11 & -13 (REF)
1/32
A5
LDW280-28608 (REF)
LDW280-25521 (REF)
-Y27.00 (REF)
27/32
.190-.196 (#11 DRILL) (2)
NAS 697 A3 (2)
NAS 1097 AD3 (4)
F8 H2
LDW280-17989-13 (FOR DETAIL Y)
LDW280-17989-11 (FOR DETAIL Z) (ON-3 ONLY)
A5
MS20470AD4 (2)
F8
X 196.97 (REF) (FOR DETAIL V) (ON-3 ONLY)
X 197.35 (REF) (FOR DETAIL W)
X 197.42 (REF) (FOR DETAIL Y)
X 197.24 (REF) (FOR DETAIL Z) (ON-3 ONLY)
LDW 280-28608 (REF)
F8 A5
LDW280-17989-11 (REF) (ON-3 ONLY)
LDW280-17989-13 (REF)
1/32
+Z 21.334 (REF) (FOR DETAIL Z) (ON-3 ONLY)
LDW280-25521 (REF)

DETAIL V SHOWN (F8)
(ZONE 5B SH 3.00) (ON-3 ONLY)

DETAIL W (IDENT TO DETAIL (V) EXCEPT AS NOTED)
(ZONE 5B SH 3.00)

DETAIL Y (IDENT TO DETAIL (V) EXCEPT AS NOTED)
(ZONE 6B SH 3.00)

DETAIL Z (IDENT TO DETAIL (V) EXCEPT AS NOTED)
(ZONE 6B SH 3.00) (ON-3 ONLY)

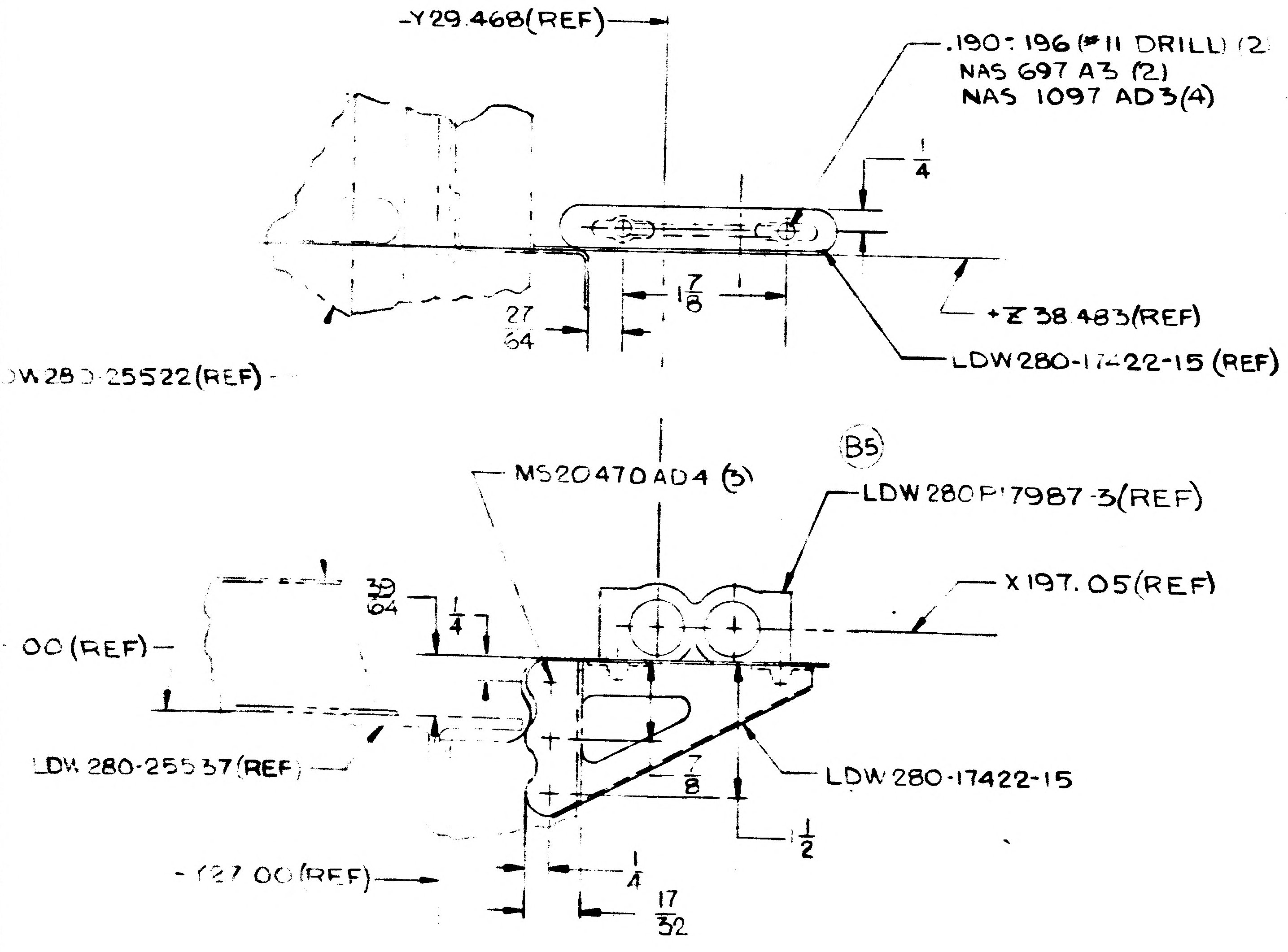

-Y29.468 (REF)
.190-.196 (#11 DRILL) (2)
NAS 697 A3 (2)
NAS 1097 AD3 (4)
1/4
27/64
1 7/8
+Z 38.483 (REF)
LDW280-25522 (REF)
LDW280-17422-15 (REF)
MS20470AD4 (5)
B5
LDW280P17987-3 (REF)
X 197.05 (REF)
.00 (REF)
39/64
1/4
LDW 280-25537 (REF)
7/8
LDW 280-17422-15
1/2
-Y27.00 (REF)
1/4
17/32

DETAIL U
VIEW LOOKING INBD
(ZONE 7B SH 3.00)

MANUFACTURING OPERATIONS
UNLESS OTHERWISE SPECIFIED
NOTES CHECKED √ APPLY TO THIS DWG.

PART NUMBER AND ALL OTHER MARKINGS IN REGION MARKED ▭ USE BOTH SIDES IF NECESSARY.	
FILLET AND INSIDE CORNER RADII TOLERANCES .016R TO .062R ± .010 .063R TO .250R ± .015 OVER .250R ± .030	
DEPTH SHOWN FOR TAPPED HOLES IS FULL THDS. 2-3 IMP THDS. BEYOND PERMISSIBLE.	
EXTERNAL THREAD LENGTH SHOWN INCLUDES 2 IMPERFECT THREADS MAX.	
DO NOT CADMIUM PLATE & PAINT HOLES OR SURFACES MARKED WITH DOUBLE ASTERISK.	
MISMATCH STEP OF ± .005 PERMISSIBLE DUE TO CHANGE OF CUTTERS AT INSIDE INTERSECTING SURFACES.	
DIAMETERS MARKED MUST BE CONCENTRIC WITHIN FULL INDICATOR READING	
HOLES MUST BE KEPT FREE OF CHROME PLATING SOLUTION.	
ALL DIMENSIONS SHOWN TO BE MET AFTER CADMIUM PLATING. THICKNESS OF PLATE .0003 MIN. TO .0005 MAX. MIN. THICKNESS TO BE .0002 ON THREADED AREAS. NO ALLOWANCE FOR PLATING IN HOLES	
125 √ SURFACE ROUGHNESS INCLUDING REAMED HOLES PER MIL-STD-10	
200 √ FOR ALL DRILLED HOLES	
REMOVE ALL BURRS. BREAK ALL EDGES .015-.031	
INSPECTION INFORMATION MINIMUM PERMISSIBLE AVERAGE EDGE DISTANCE MARKED IS	
SYMBOL ƒ DENOTES SURFACE TO BE MACHINED	
UNLESS OTHERWISE SPECIFIED TOLERANCE ON FLANGES IS ± 1/32	
LENGTHS OF AN, NAS & MS AL ALY RIVETS SHORTER THAN 1 INCH ARE NOT SPECIFIED.	
TOLERANCE ON LOFTED DELINEATIONS IS	

DWG SIZE 34 X 86

PRINTING INFO ONLY
FULL SIZE SHEET AREA (36 X 88) = 22.0 SQ. FT.
1/2 SIZE SHEET AREA (1/4 OF FULL) = 5.5 SQ. FT.

PRINT TRIM LINE

D C B A

LDW280-52587 H

LDW280-52587 H

02/02 NAS 9-1100

GRUMMAN AIRCRAFT ENGRG CORP., BETHPAGE, L. I., NEW YORK			
LM	SIZE J	CODE IDENT NO. 26512	LDW280-52587 H
MODEL OR END ITEM	SCALE		SHEET 5

2 FRAMES

LDW280-52587 SH 5

LDW280-52587 SH8

D

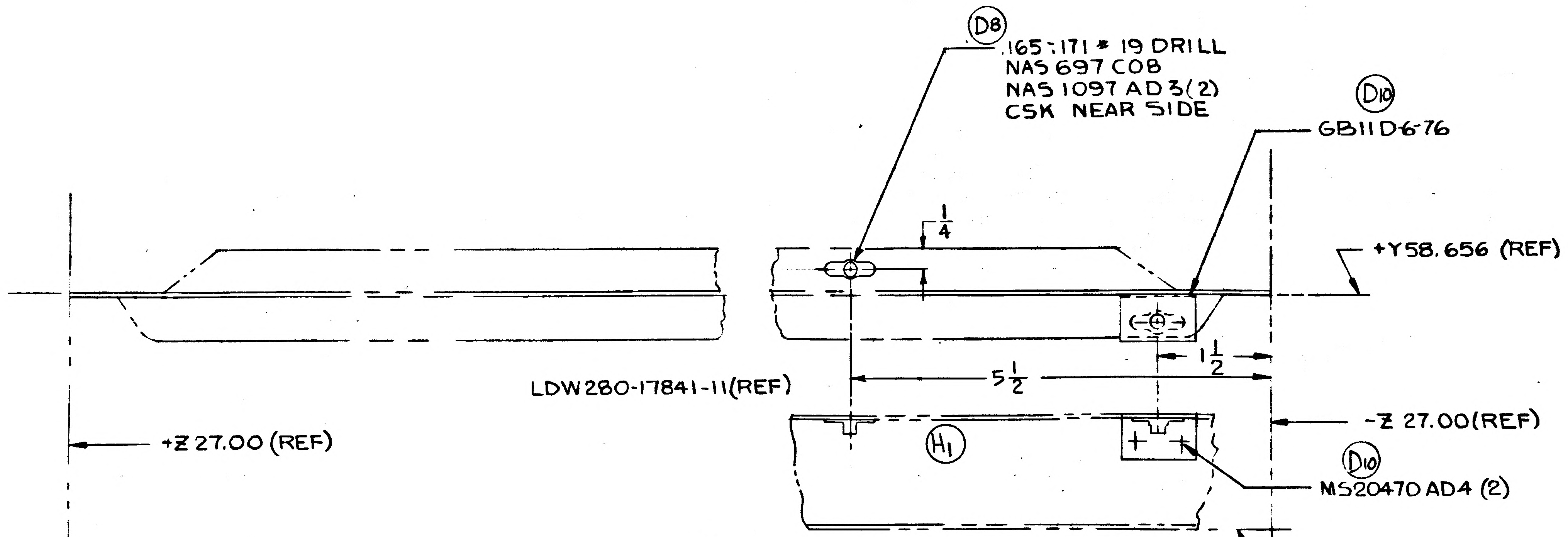
D8
.165-.171 # 19 DRILL
NAS 697 C08
NAS 1097 AD 3(2)
CSK NEAR SIDE
D10
GB11D6-76
1/4
+Y58.656 (REF)
5 1/2
1 1/2
LDW280-17841-11(REF)
-Z 27.00(REF)
+Z 27.00 (REF)
H1
D10
MS20470 AD4 (2)
X 196.04(REF)

D8
DETAIL AP
(ZONE 5D SH 3.00)

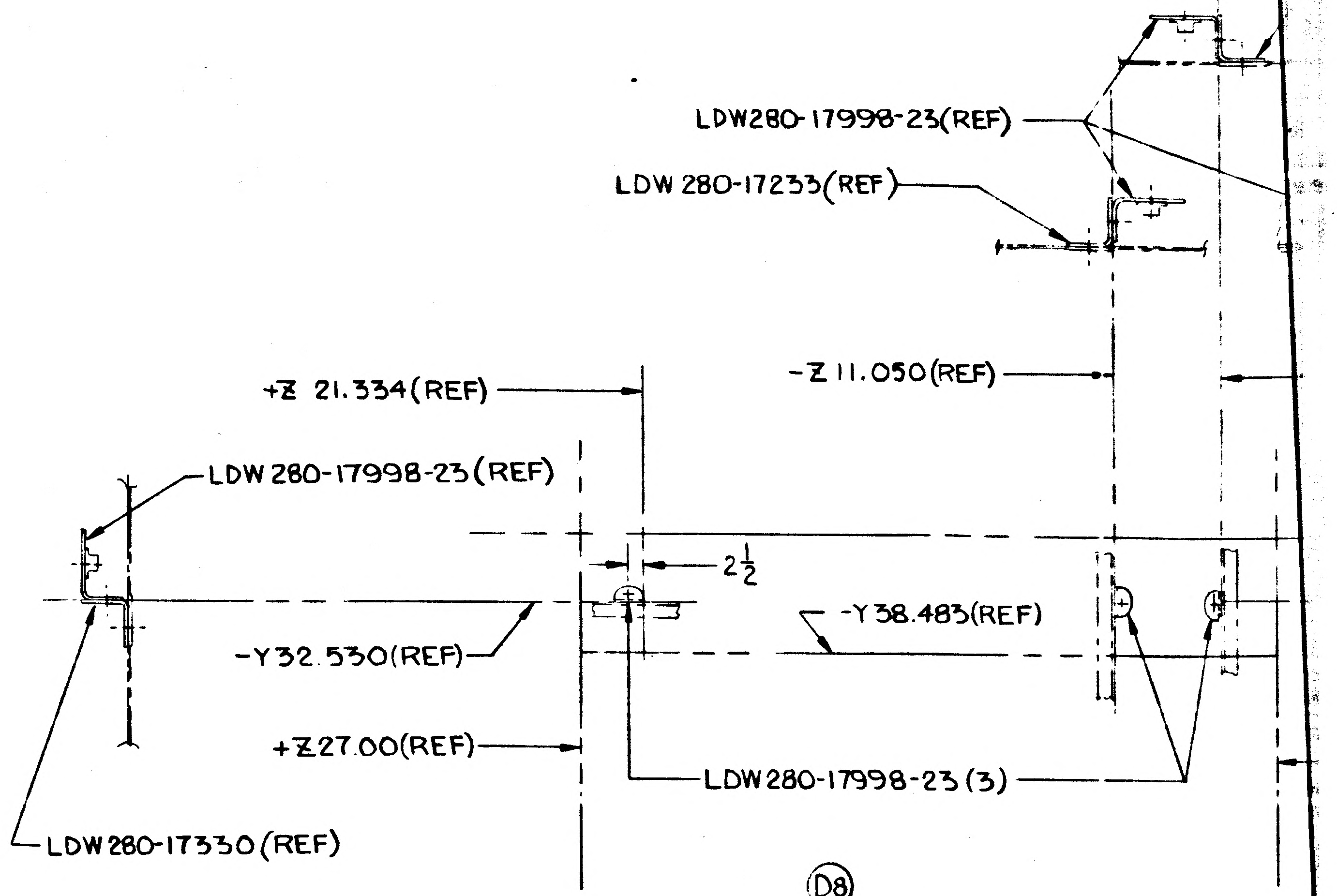
LDW280-17998-23(REF)
LDW 280-17233(REF)
-Z 11.050(REF)
+Z 21.334(REF)
LDW 280-17998-23 (REF)
2 1/2
-Y32.530(REF)
-Y38.483(REF)
+Z27.00(REF)
LDW280-17998-23 (3)
LDW 280-17330 (REF)

D8
DETAIL A R (ZONE 6B SH 3.00)
NO SCALE

C

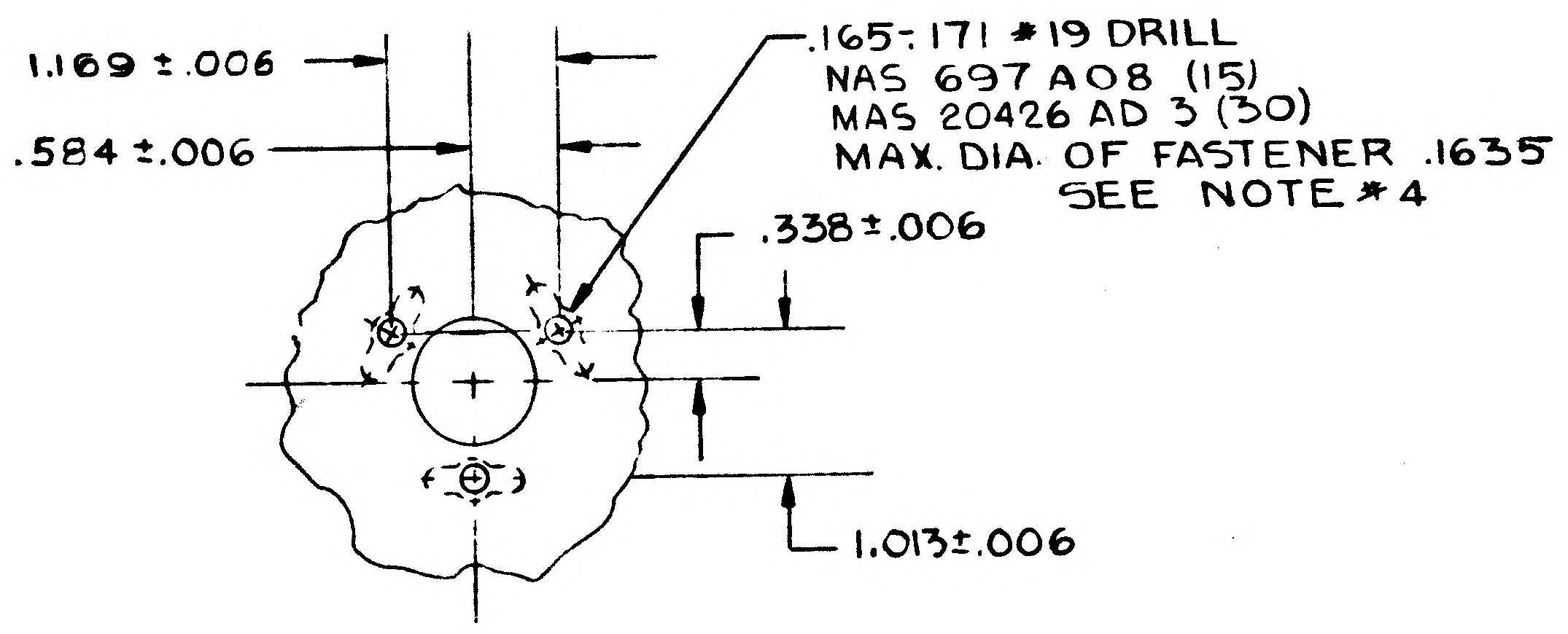
1.169 ±.006
.584 ±.006
.165-.171 # 19 DRILL
NAS 697 A08 (15)
MAS 20426 AD 3 (30)
MAX. DIA. OF FASTENER .1635
SEE NOTE # 4
.338 ±.006
1.013±.006

DETAIL A M
(ZONE 47A SH 8)

B

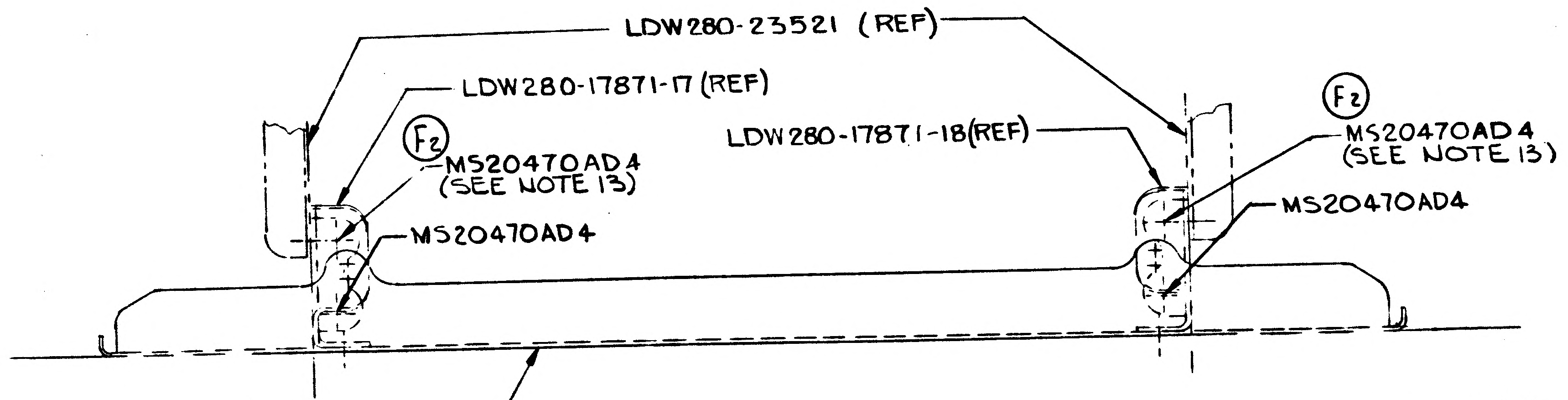
LDW280-23521 (REF)
LDW280-17871-17 (REF)
F2
MS20470AD4
(SEE NOTE 13)
MS20470AD4
LDW280-17871-18(REF)
F2
MS20470AD4
(SEE NOTE 13)
MS20470AD4

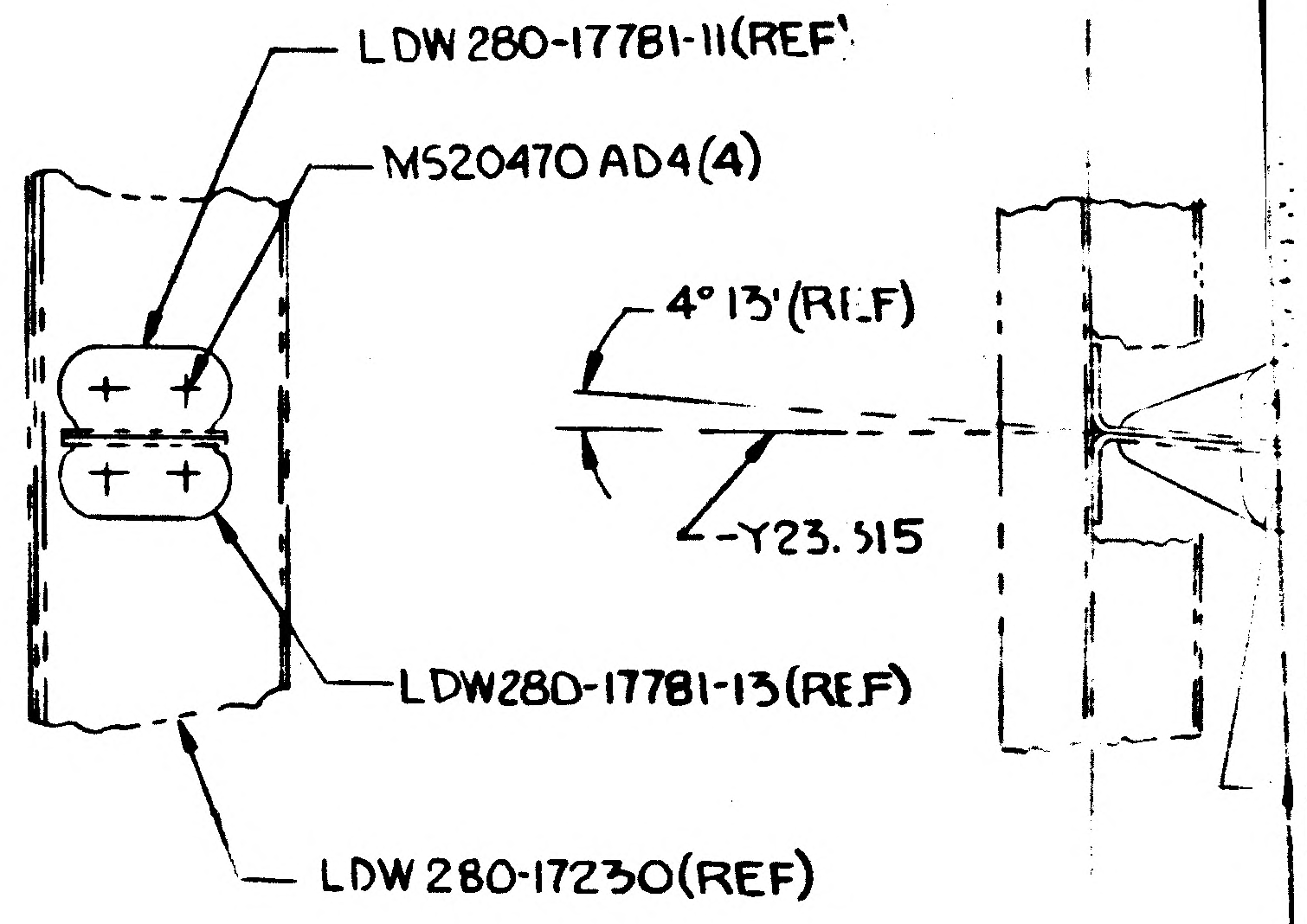
LDW 280-17781-11(REF)
MS20470 AD4(4)
4° 13'(REF)
-Y23.515
LDW280-17781-13(REF)
LDW 280-17230(REF)

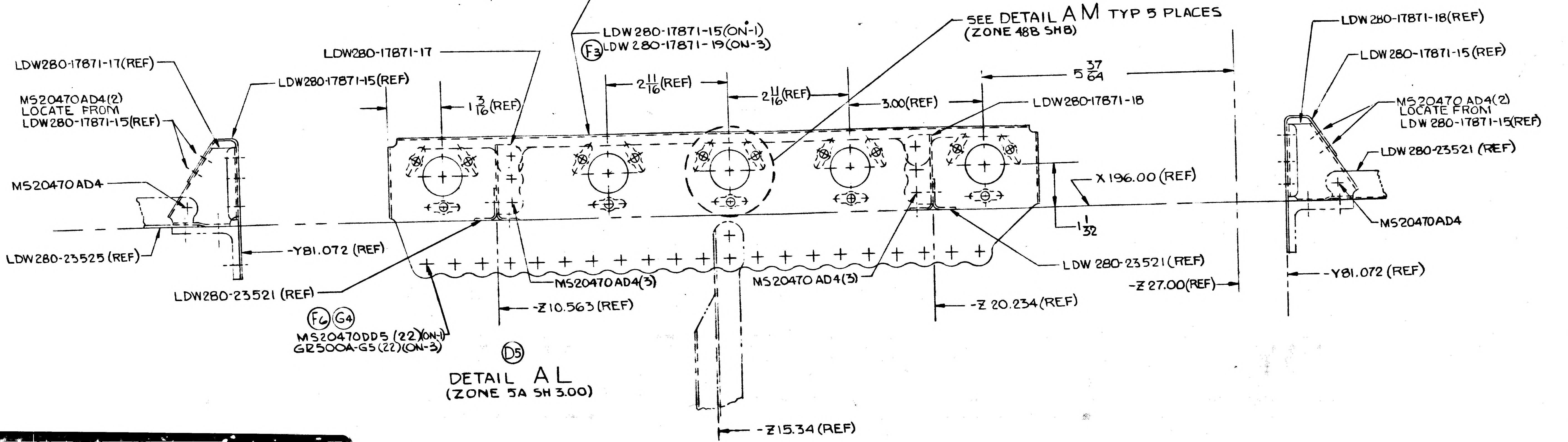
LDW280-17871-15(ON-1)
F3 LDW 280-17871-19 (ON-3)
SEE DETAIL A M TYP 5 PLACES
(ZONE 48B SH 8)
LDW280-17871-17(REF)
MS20470AD4(2)
LOCATE FROM
LDW280-17871-15(REF)
LDW280-17871-15(REF)
LDW280-17871-17
1 3/16(REF)
2 11/16(REF)
2 11/16(REF)
3.00(REF)
5 37/64
LDW280-17871-18
LDW 280-17871-18(REF)
LDW280-17871-15(REF)
MS20470 AD4(2)
LOCATE FROM
LDW 280-17871-15(REF)
LDW 280-23521 (REF)
MS20470AD4
X 196.00 (REF)
1 1/32
MS20470AD4
LDW280-23525 (REF)
-Y81.072 (REF)
LDW280-23521 (REF)
MS20470AD4(3)
MS20470 AD4(3)
LDW 280-23521(REF)
-Z 27.00(REF)
-Y81.072 (REF)
F6 G4
MS20470DD5 (22)(ON-1)
GR500A-G5(22)(ON-3)
-Z10.563 (REF)
-Z 20.234 (REF)
-Z15.34 (REF)

D5
DETAIL A L
(ZONE 5A SH 3.00)

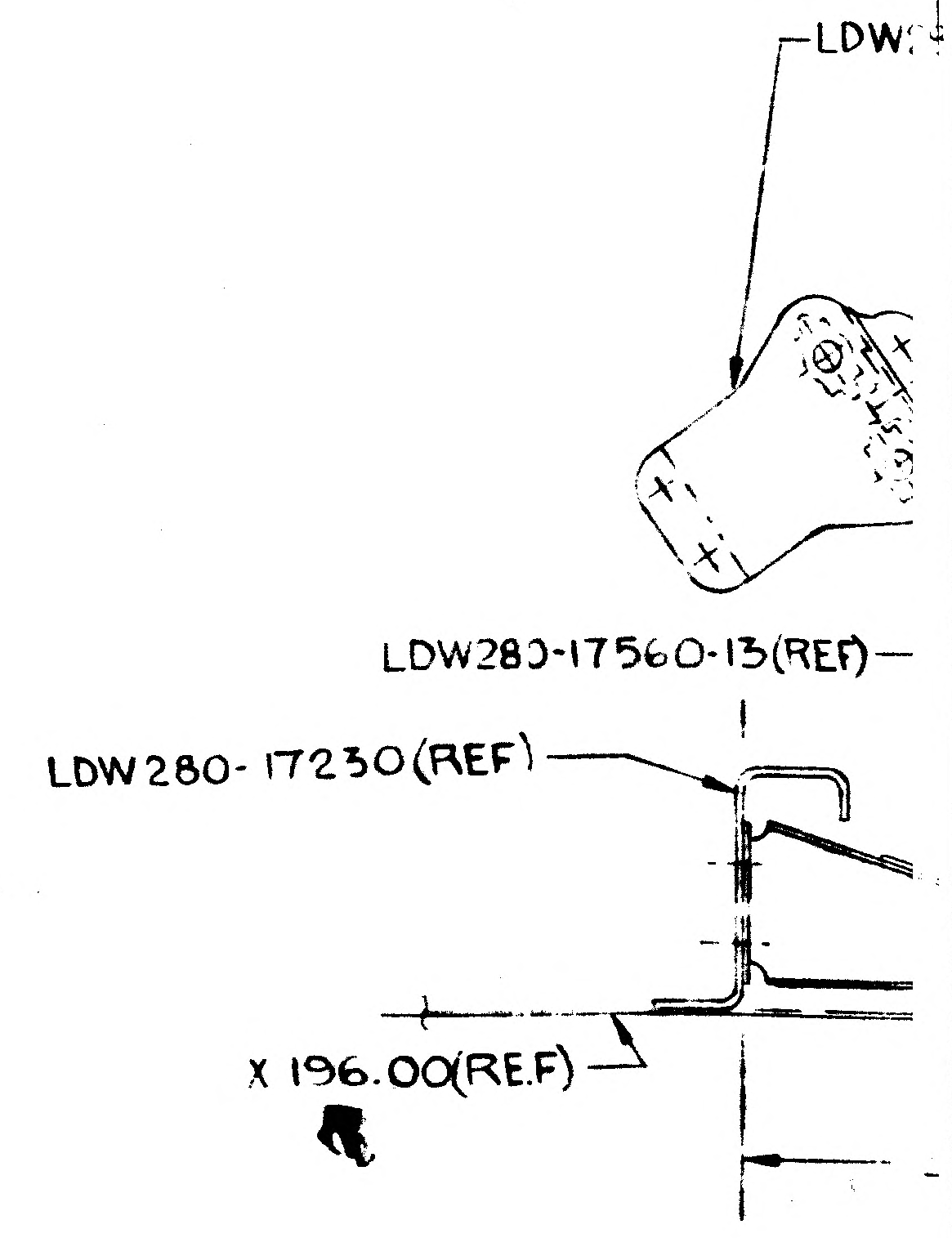
LDW
LDW280-17560-13(REF)
LDW 280-17230(REF)
X 196.00(REF)

A

01/02 NAS 9-1100

LDW280-52587 SH 8

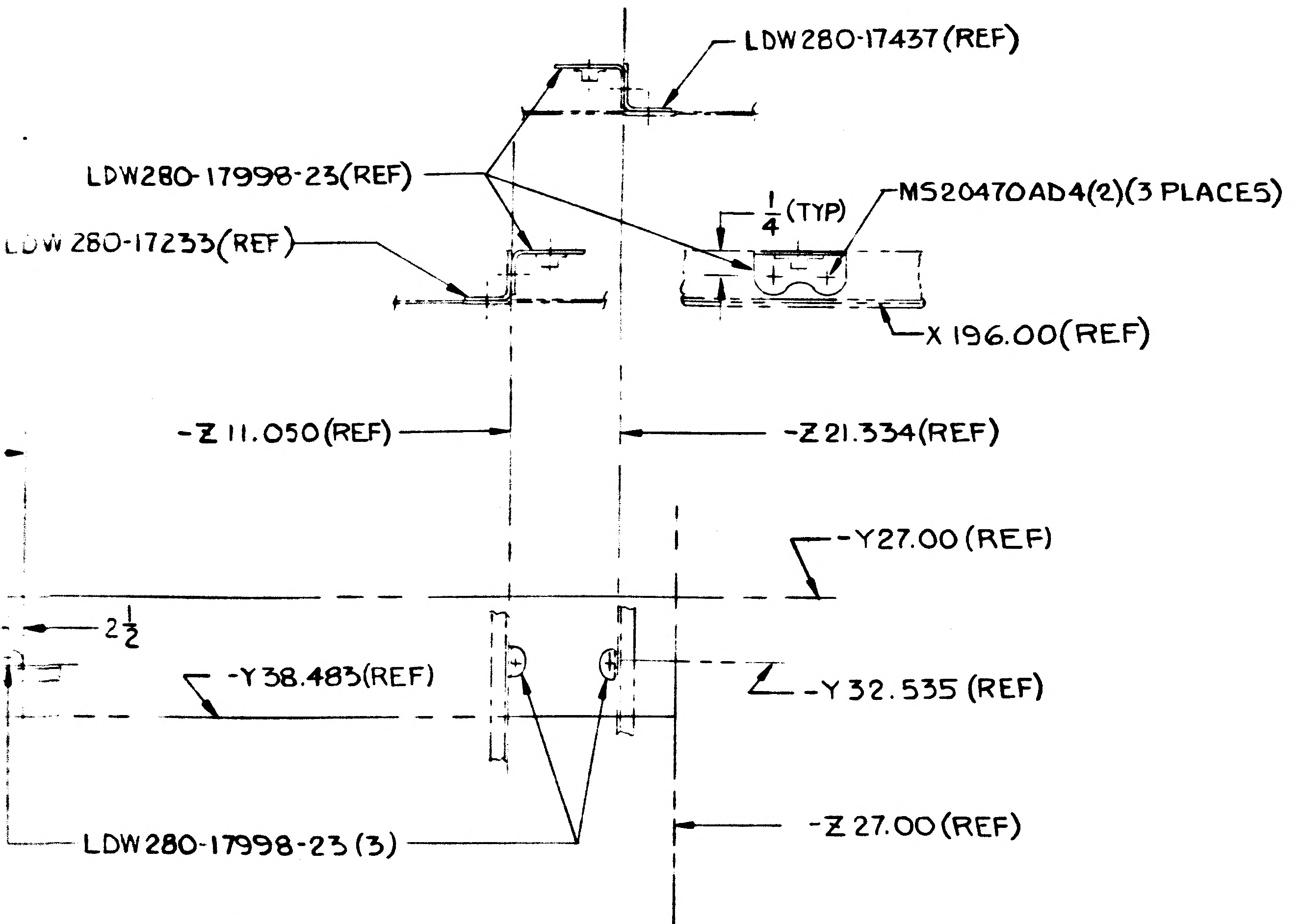
LDW280-17437(REF)
LDW280-17998-23(REF)
LDW 280-17233(REF)
$\frac{1}{4}$ (TYP)
MS20470AD4(2)(3 PLACES)
X 196.00(REF)
-Z 11.050(REF)
-Z 21.334(REF)
-Y27.00(REF)
2$\frac{1}{2}$
-Y38.483(REF)
-Y 32.535 (REF)
LDW280-17998-23(3)
-Z 27.00(REF)
D8

DETAIL AR (ZONE 6B SH 3.00)
NO SCALE

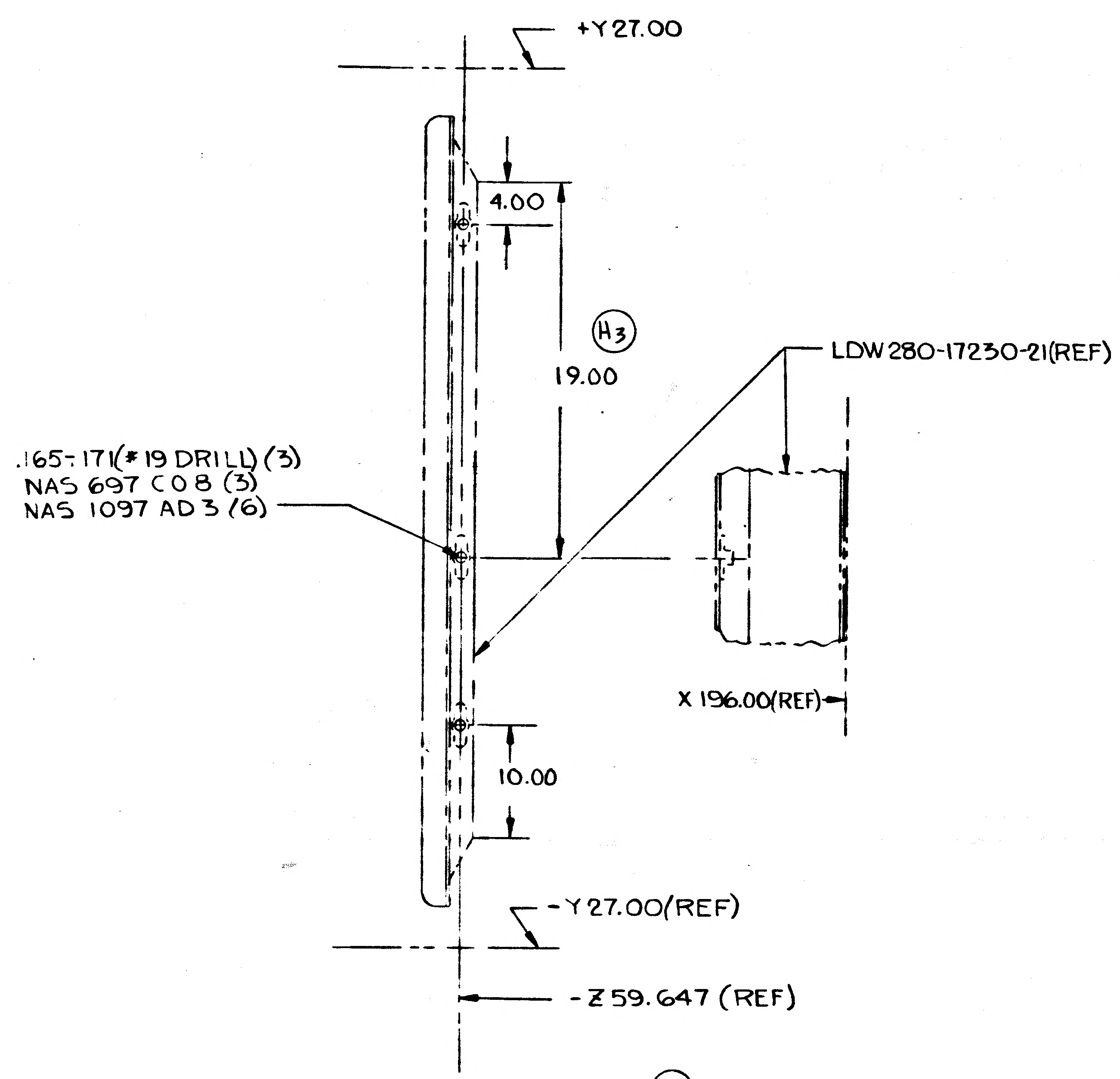
+Y27.00
4.00
H3
19.00
LDW280-17230-21(REF)
.165-.171(#19 DRILL) (3)
NAS 697 C08 (3)
NAS 1097 AD 3 (6)
X 196.00(REF)
10.00
-Y27.00(REF)
-Z 59.647 (REF)
D2

DETAIL AS
(ZONE 4D SH 3.00)
NO SCALE

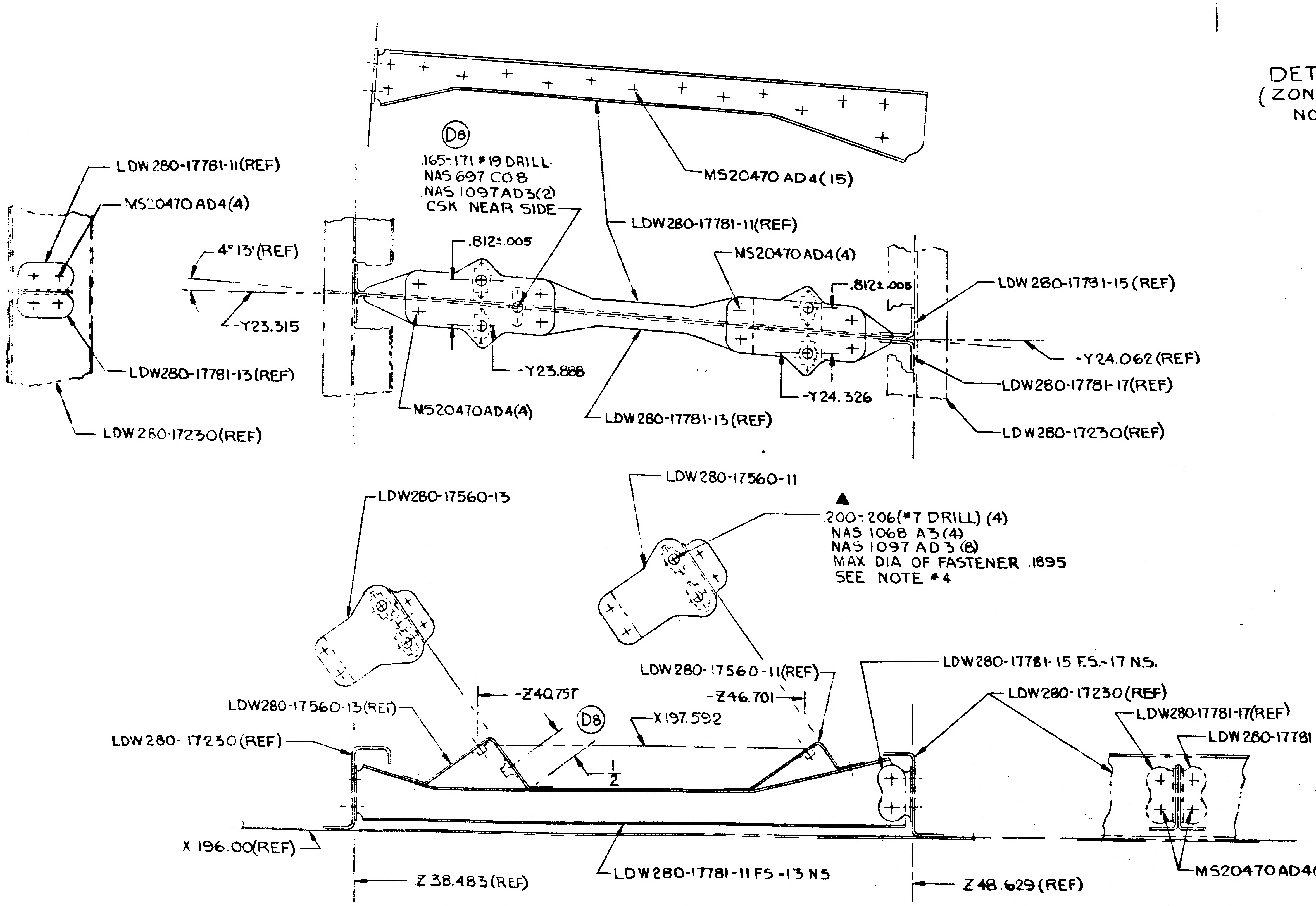
MS20470 AD4(15)
LDW 280-17781-11(REF)
MS20470 AD4(4)
D8
.165-.171 #19 DRILL
NAS 697 C08
NAS 1097AD3(2)
CSK NEAR SIDE
LDW280-17781-11(REF)
4° 13'(REF)
-Y23.315
.812±.005
-Y23.888
MS20470AD4(4)
.812±.005
LDW280-17781-15 (REF)
-Y24.062 (REF)
-Y24.326
LDW280-17781-17(REF)
LDW280-17781-13(REF)
LDW 280-17230(REF)
MS20470AD4(4)
LDW280-17781-13(REF)
LDW280-17230(REF)
LDW280-17560-13
LDW280-17560-11
.200-.206(#7 DRILL) (4)
NAS 1068 A3(4)
NAS 1097 AD 3 (8)
MAX DIA OF FASTENER .1895
SEE NOTE #4
LDW280-17560-11(REF)
LDW280-17781-15 F.S.-17 N.S.
LDW280-17560-13(REF)
-Z40.757
-Z46.701
LDW280-17230(REF)
LDW280-17781-17(REF)
LDW280-17781-15(REF)
D8
X197.592
LDW280-17230 (REF)
$\frac{1}{2}$
X 196.00(REF)
LDW280-17781-11 FS -13 NS
Z 38.483(REF)
Z 48.629 (REF)
MS20470AD4(4)

DETAIL AN
(ZONE 4B SH 3.00)

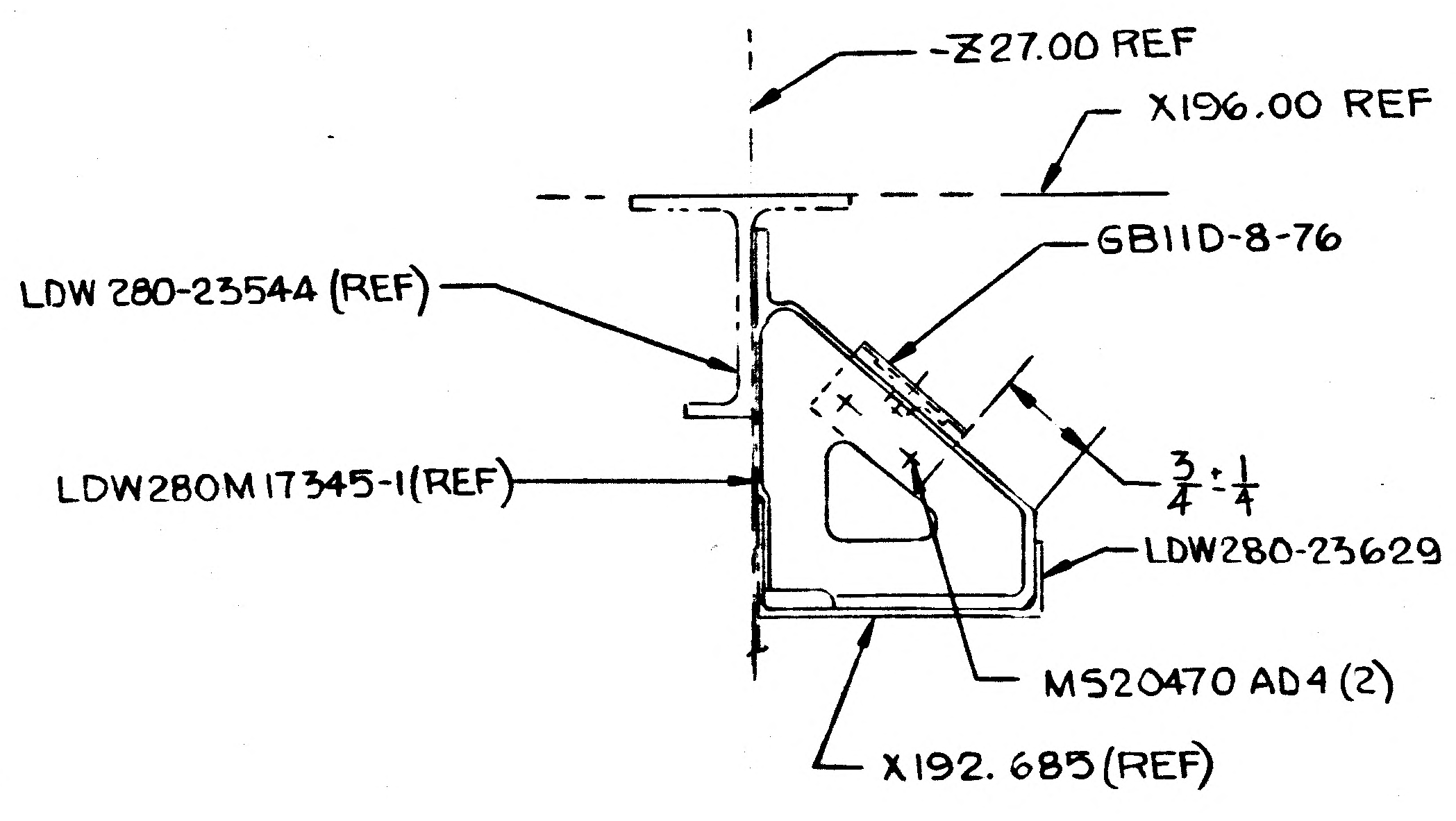
-Z27.00 REF
X196.00 REF
LDW 280-23544 (REF)
GB11D-8-76
LDW280M17345-1(REF)
$\frac{3}{4}$: $\frac{1}{4}$
LDW280-23629 (REF)
MS20470 AD4(2)
X192.685(REF)
E2

DETAIL AT
(ZONE 4C SH 3.00)

~~MANUFACTURING OPERATIONS~~ ~~UNLESS OTHERWISE SPECIFIED NOTES CHECKED √ APPLY TO THIS DWG.~~	
~~PART NUMBER AND ALL OTHER MARKINGS IN REGION MARKED ⊠ USE BOTH SIDES IF NECESSARY.~~	
~~FILLET AND INSIDE CORNER RADII TOLERANCES~~ ~~.016R TO .062R ± .010~~ ~~.063R TO .250R ± .015~~ ~~OVER .250R ± .030~~	
~~DEPTH SHOWN FOR TAPPED HOLES IS FULL THDS. 2-3 IMP THDS. BEYOND PERMISSIBLE.~~	
~~EXTERNAL THREAD LENGTH SHOWN INCLUDES 2 IMPERFECT THREADS MAX.~~	
~~DO NOT CADMIUM PLATE & PAINT HOLES OR SURFACES MARKED WITH DOUBLE ASTERISK.~~	
~~MISMATCH STEP OF ± .005 PERMISSIBLE DUE TO CHANGE OF CUTTERS AT INSIDE INTERSECTING SURFACES.~~	
~~DIAMETERS MARKED MUST BE CONCENTRIC WITHIN FULL INDICATOR READING~~	
~~HOLES MUST BE KEPT FREE OF CHROME PLATING SOLUTION.~~	
~~ALL DIMENSIONS SHOWN TO BE MET AFTER CADMIUM PLATING. THICKNESS OF PLATE .0003 MIN. TO .0005 MAX. MIN. THICKNESS TO BE .0002 ON THREADED AREAS. NO ALLOWANCE FOR PLATING IN HOLES~~	
~~125 SURFACE ROUGHNESS INCLUDING REAMED HOLES PER MIL-STD-10~~	
~~200 FOR ALL DRILLED HOLES~~	
~~REMOVE ALL BURRS. BREAK ALL EDGES .015-.031~~	
~~INSPECTION INFORMATION MINIMUM PERMISSIBLE AVERAGE EDGE DISTANCE MARKED IS~~	
~~SYMBOL √ DENOTES SURFACE TO BE MACHINED~~	
~~UNLESS OTHERWISE SPECIFIED TOLERANCE ON FLANGES IS ± 1/32~~	
~~LENGTHS OF AN, NAS & MS AL ALY RIVETS SHORTER THAN 1 INCH ARE NOT SPECIFIED.~~	
~~TOLERANCE ON LOFTED DELINEATIONS IS~~	

DWG SIZE 34 X 86
PRINTING INFO ONLY
FULL SIZE SHEET AREA (36 X 88)= 22.0 SQ. FT.
1/2 SIZE SHEET AREA (1/4 OF FULL)= 5.5 SQ. FT.
PRINT TRIM LINE

D C B A

LDW280-52587 H

LDW280-52587 H

02/02

NAS 9-1100

GRUMMAN AIRCRAFT ENGRG CORP., BETHPAGE, L. I., NEW YORK

MODEL OR END ITEM	SIZE	CODE IDENT NO.		
LM	J	26512	LDW280-52587	H
	SCALE NOTED		SHEET 8.00	

2 FRAMES

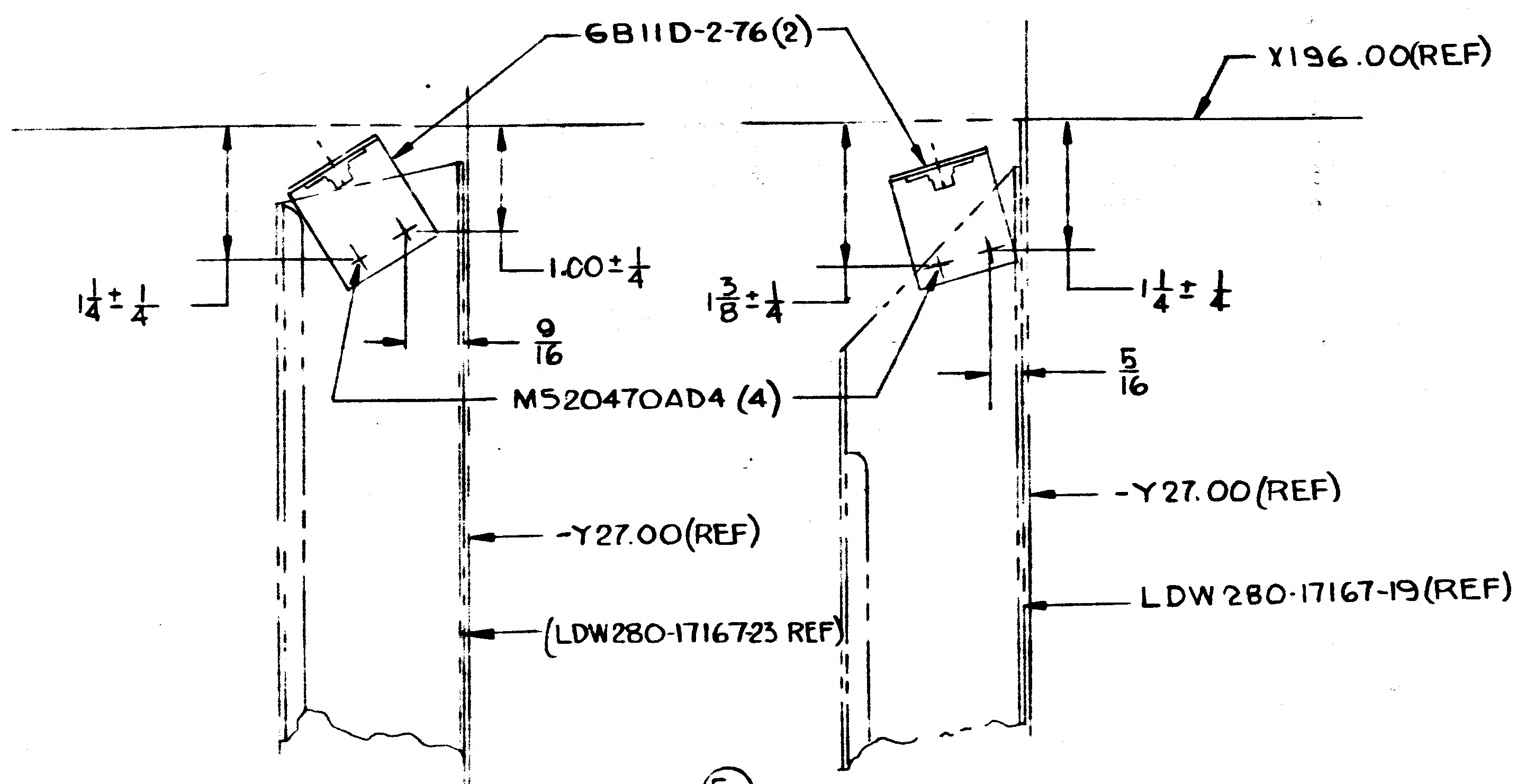
6B11D-2-76(2)
X196.00(REF)
1.00 ± 1/4
1 1/4 ± 1/4
1 3/8 ± 1/4
1 1/4 ± 1/4
9/16
5/16
MS20470AD4 (4)
-Y27.00(REF)
-Y27.00(REF)
LDW280-17167-19(REF)
(LDW280-1716723 REF)
E2

SECTION AV-AV

(ZONE 56&57C SH 9.00)
NO SCALE

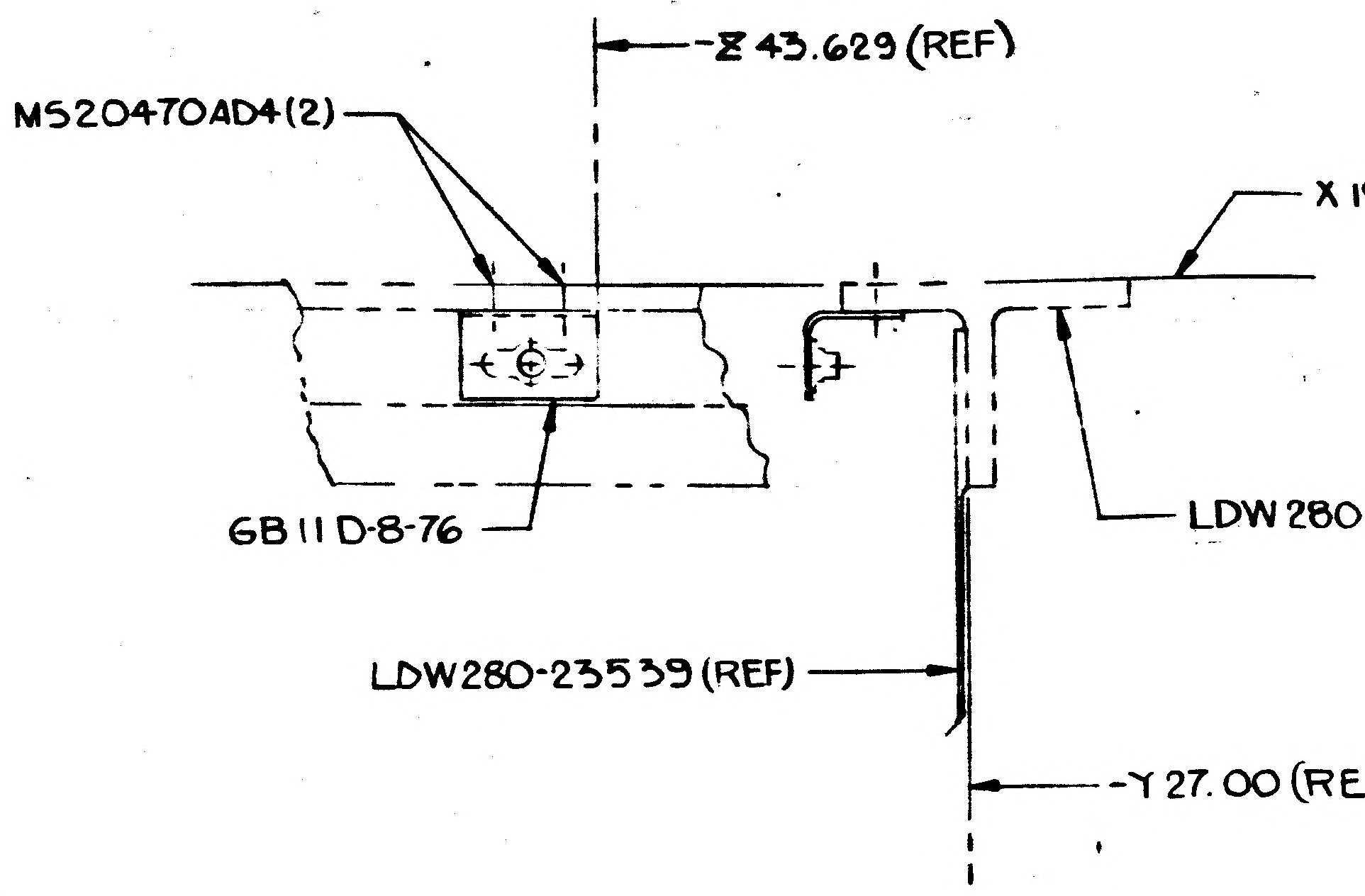
-Z43.629(REF)
MS20470AD4(2)
X196.00(REF)
6B11D-8-76
LDW280M17110 (REF)
LDW280-23539(REF)
-Y27.00(REF)
E2

DETAIL AW

(ZONE5B SH 3.00)
NO SCALE

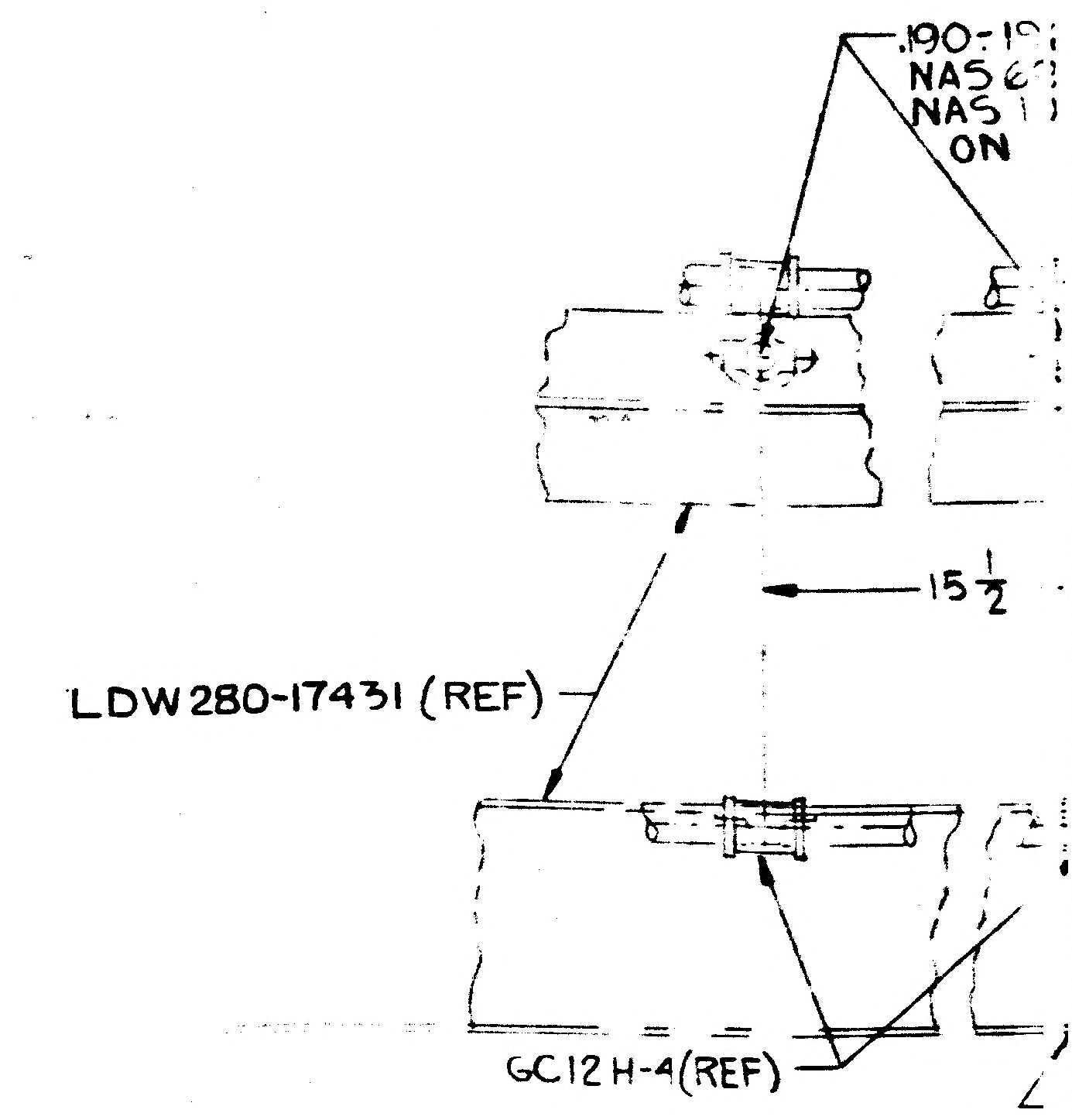
.190-.19
NAS 6
NAS 1
ON
15 1/2
LDW280-17431 (REF)
GC12H-4(REF)

DETAIL A
(ZONE 5A SH
VIEW LOOKING
NO SCALE

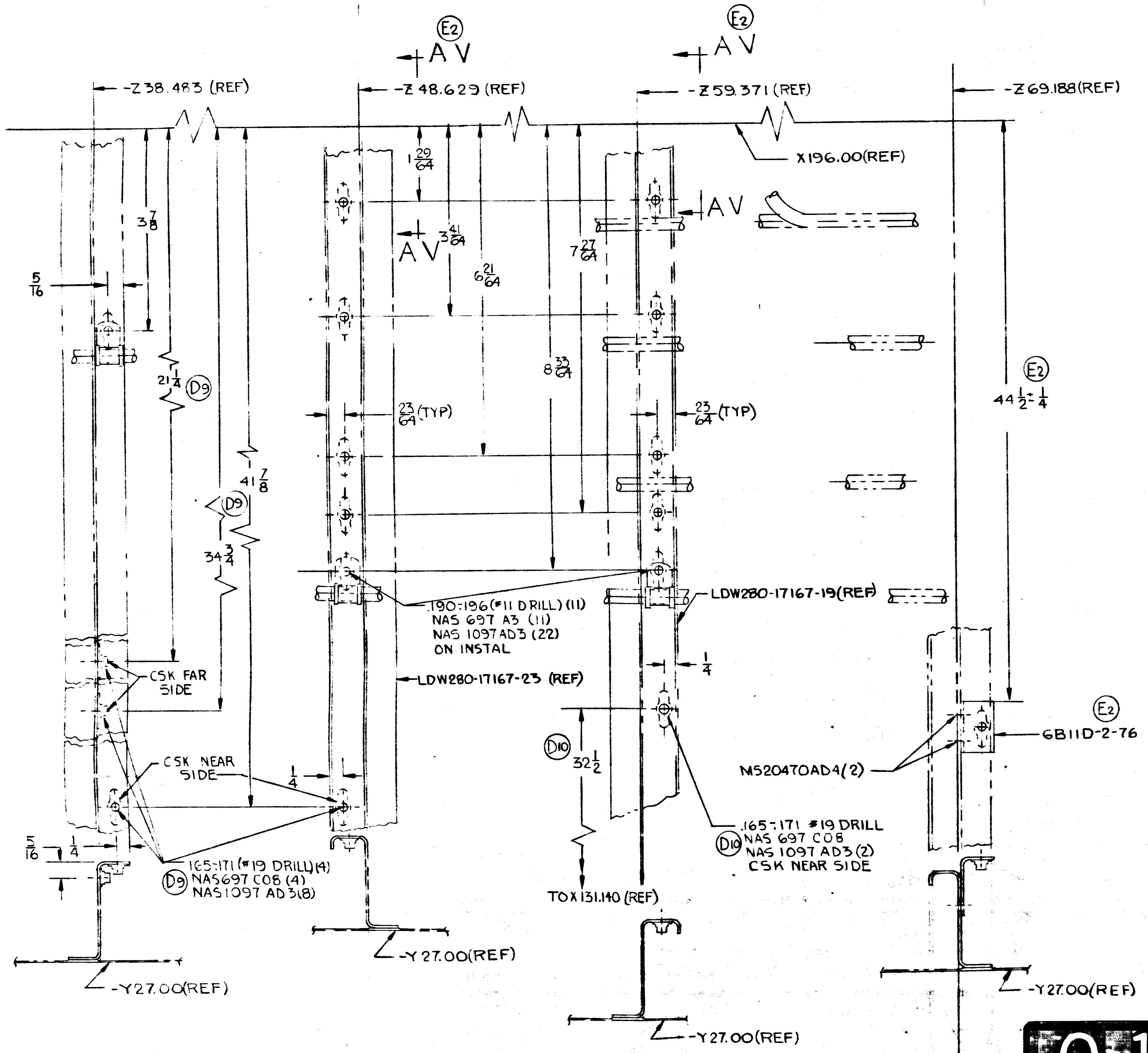
E2
AV
E2
AV
-Z38.483 (REF)
-Z48.629 (REF)
-Z59.371 (REF)
-Z69.188(REF)
X196.00(REF)
1 29/64
3 7/8
AV 3 41/64
AV
6 21/64
7 27/64
8 33/64
5/16
21 1/4
D9
41 7/8
D9
34 3/4
23/64 (TYP)
23/64 (TYP)
44 1/2 ± 1/4
E2
.190-.196(#11 DRILL) (11)
NAS 697 A3 (11)
NAS 1097AD3 (22)
ON INSTAL
LDW280-17167-19(REF)
LDW280-17167-23 (REF)
1/4
CSK FAR SIDE
CSK NEAR SIDE
1/4
D10
32 1/2
MS20470AD4(2)
6B11D-2-76
E2
.165-.171 #19 DRILL
D10 NAS 697 C06
NAS 1097 AD3(2)
CSK NEAR SIDE
5/16
1/4
.165-.171(#19 DRILL)(4)
D9 NAS697 C06 (4)
NAS1097 AD3(8)
TO X131.140 (REF)
-Y27.00(REF)
-Y27.00(REF)
-Y27.00(REF)
-Y27.00(REF)

SECTION AU-AU

(ZONE4B SH 3.00)
NO SCALE

01/02 NAS 9-1100

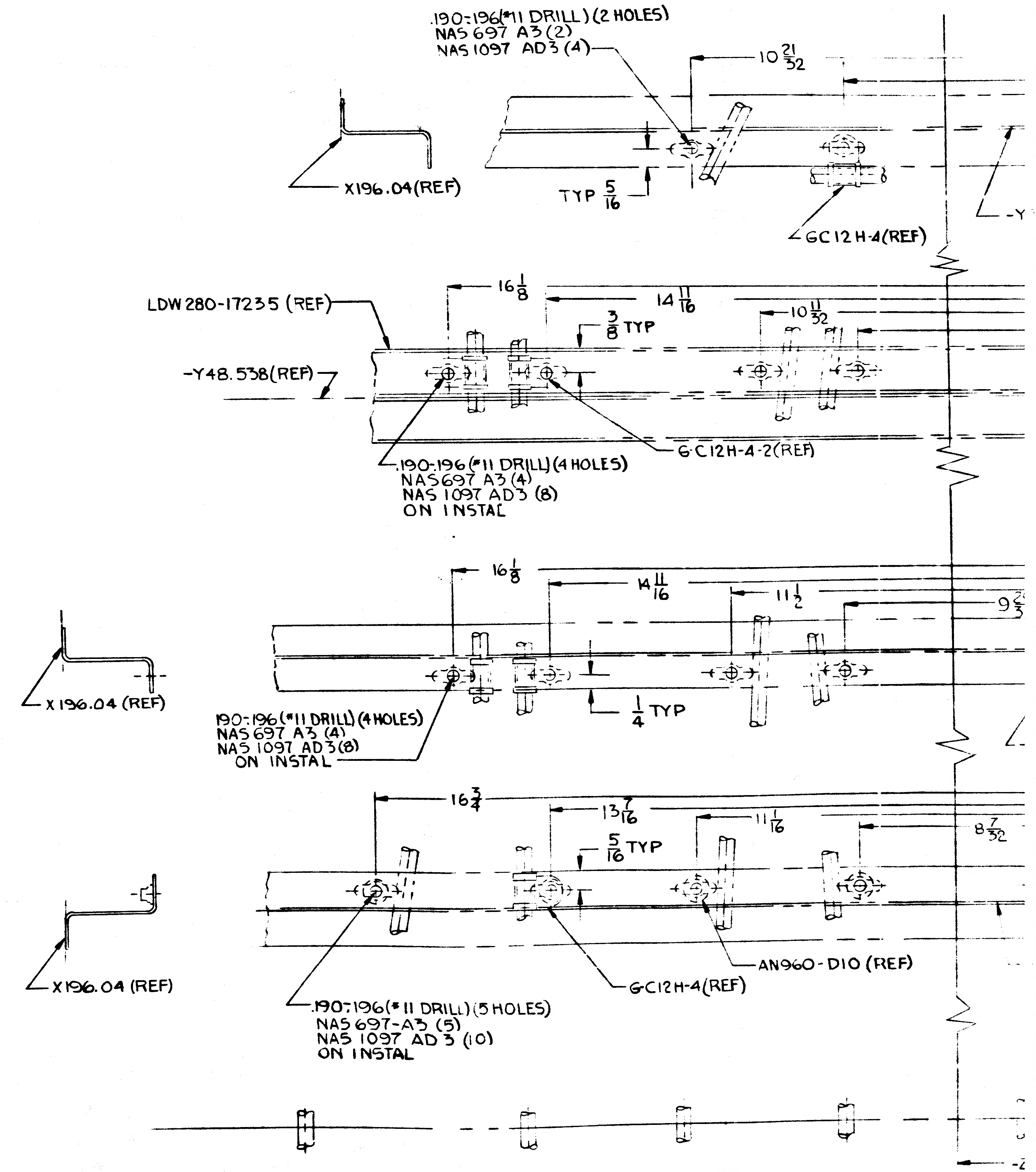
.190-.196(#11 DRILL) (2 HOLES)
NAS 697 A3 (2)
NAS 1097 AD3 (4)
10 21/32
X196.04(REF)
TYP 5/16
GC12H-4(REF)
LDW 280-17235 (REF)
16 1/8
14 11/16
10 11/32
3/8 TYP
-Y48.538(REF)
.190-.196(#11 DRILL)(4 HOLES)
NAS697 A3 (4)
NAS 1097 AD3 (8)
ON INSTAL
GC12H-4-2(REF)
16 1/8
14 11/16
11 1/2
X196.04 (REF)
1/4 TYP
.190-.196(#11 DRILL)(4 HOLES)
NAS 697 A3 (4)
NAS 1097 AD3(8)
ON INSTAL
16 3/4
13 7/16
11 1/16
8 7/32
5/16 TYP
X196.04 (REF)
AN960-D10 (REF)
GC12H-4(REF)
.190-.196(#11 DRILL)(5 HOLES)
NAS 697-A3 (5)
NAS 1097 AD3 (10)
ON INSTAL

DETAIL AZ

(ZONE 6B SH 3.00)
NO SCALE

LDW280-52587	SH 9

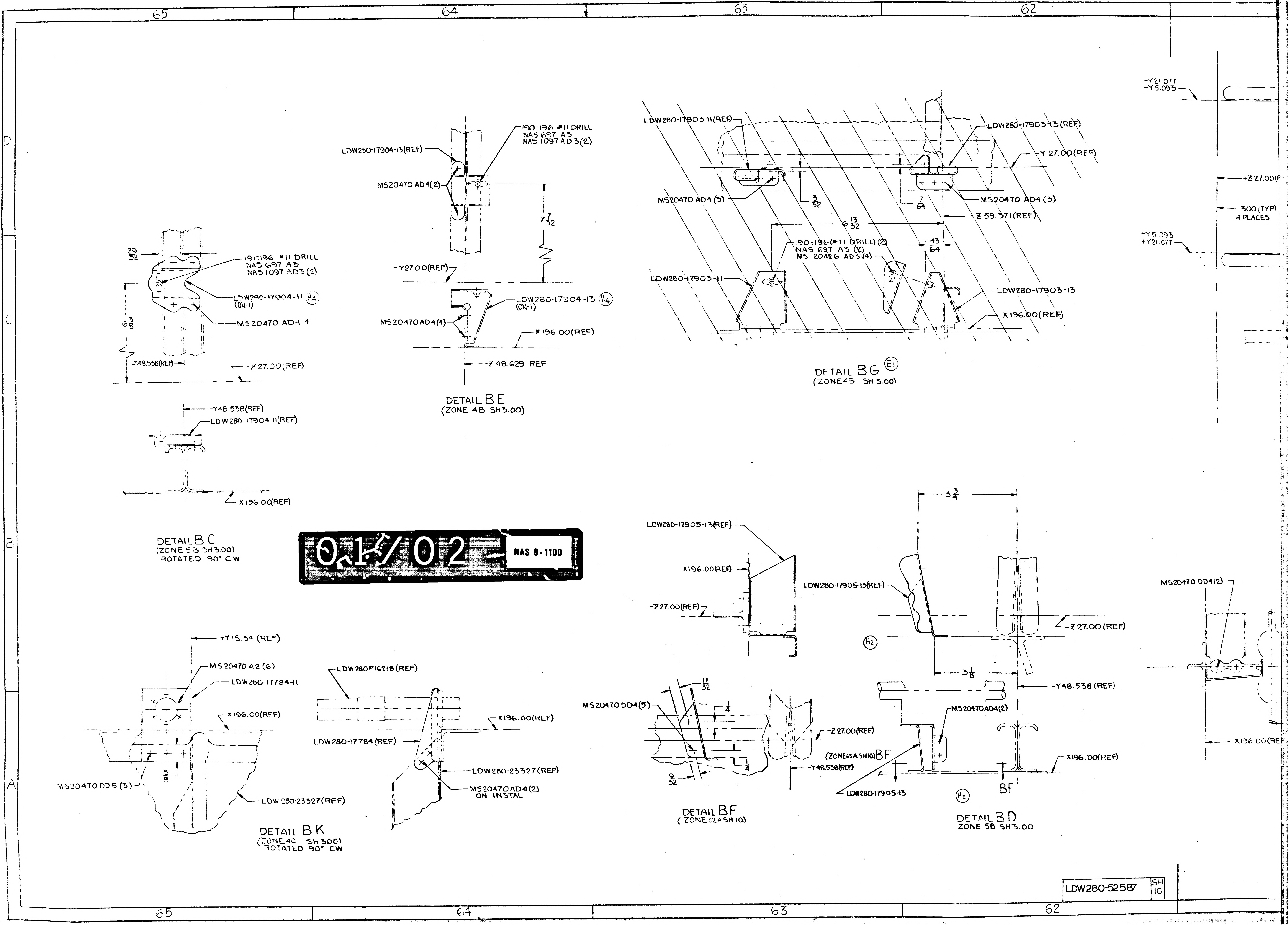

65
64
63
62
D
C
B
A
LDW280-17904-13(REF)
190-196 #11 DRILL
NAS 697 A3
NAS 1097 AD3(2)
MS20470 AD4(2)
7 7/32
-Y27.00(REF)
LDW280-17904-13 (H4)
(ON-1)
MS20470 AD4(4)
X 196.00(REF)
-Z 48.629 REF
DETAIL BE
(ZONE 4B SH 3.00)
29/32
191-196 #11 DRILL
NAS 697 A3
NAS 1097 AD3 (2)
LDW280-17904-11 (H4)
(ON-1)
MS20470 AD4 4
6 3/8
-Y48.538(REF)
-Z 27.00(REF)
-Y48.538(REF)
LDW280-17904-11(REF)
X196.00(REF)
DETAIL BC
(ZONE 5B SH 3.00)
ROTATED 90° CW
LDW280-17903-11(REF)
LDW280-17903-13(REF)
-Y 27.00(REF)
MS20470 AD4 (3)
3/32
7/64
MS20470 AD4 (3)
-Z 59.371(REF)
6 13/32
43/64
190-196(#11 DRILL) (2)
NAS 697 A3 (2)
MS 20426 AD3(4)
LDW280-17903-11
LDW280-17903-13
X 196.00(REF)
DETAIL BG (E1)
(ZONE 4B SH 3.00)
-Y21.077
-Y5.093
+Z 27.00
3.00 (TYP)
4 PLACES
+Y5.093
+Y21.077
+Y15.34 (REF)
MS20470 A2 (6)
LDW280-17784-11
X196.00(REF)
5/8
MS20470 DD5 (3)
LDW 280-23327(REF)
LDW280P16218 (REF)
X196.00(REF)
LDW280-17784(REF)
LDW280-23327(REF)
MS20470 AD4(2)
ON INSTAL
DETAIL BK
(ZONE 4C SH 3.00)
ROTATED 90° CW
LDW280-17905-13(REF)
X196.00(REF)
-Z27.00(REF)
11/32
MS20470 DD4(5)
1/4
1/4
9/32
-Z27.00(REF)
-Y48.538(REF)
DETAIL BF
(ZONE 62A SH 10)
3 3/4
LDW280-17905-13(REF)
-Z27.00 (REF)
(H2)
3 1/8
-Y48.538 (REF)
MS20470AD4(2)
(ZONE 63A SH10) BF
X196.00(REF)
LDW280-17905-13
(H2)
BF
DETAIL BD
ZONE 5B SH 3.00
MS20470 DD4(2)
X196.00(REF
LDW280-52587
SH 10

01/02 NAS 9-1100

LDW280-52587 SH 10

(REF)

27.00(REF)

103-13

EF)

-Z27.00(REF)

-Y48.538(REF)

-X196.00(REF)

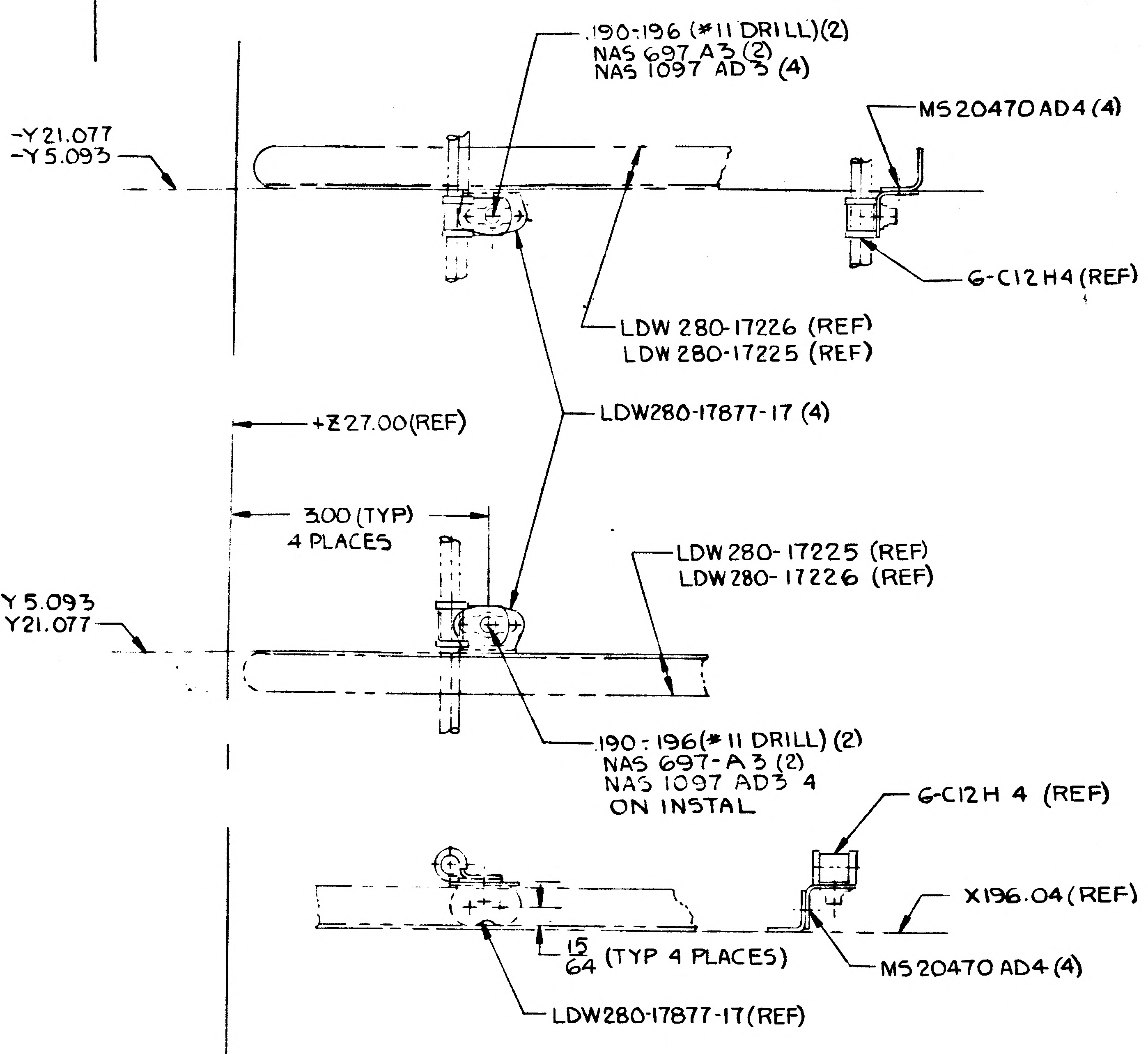
-Y21.077
-Y5.093
.190-.196 (#11 DRILL)(2)
NAS 697 A3 (2)
NAS 1097 AD3 (4)
MS20470AD4(4)
6-C12H4(REF)
LDW 280-17226 (REF)
LDW 280-17225 (REF)
LDW280-17877-17 (4)
+Z27.00(REF)
3.00 (TYP)
4 PLACES
LDW 280-17225 (REF)
LDW 280-17226 (REF)
+Y5.093
+Y21.077
.190-.196(#11 DRILL)(2)
NAS 697-A3 (2)
NAS 1097 AD3 4
ON INSTAL
6-C12H 4 (REF)
X196.04 (REF)
15/64 (TYP 4 PLACES)
MS20470 AD4 (4)
LDW280-17877-17(REF)

DETAIL BJ
(ZONE 6C SH 3.00)

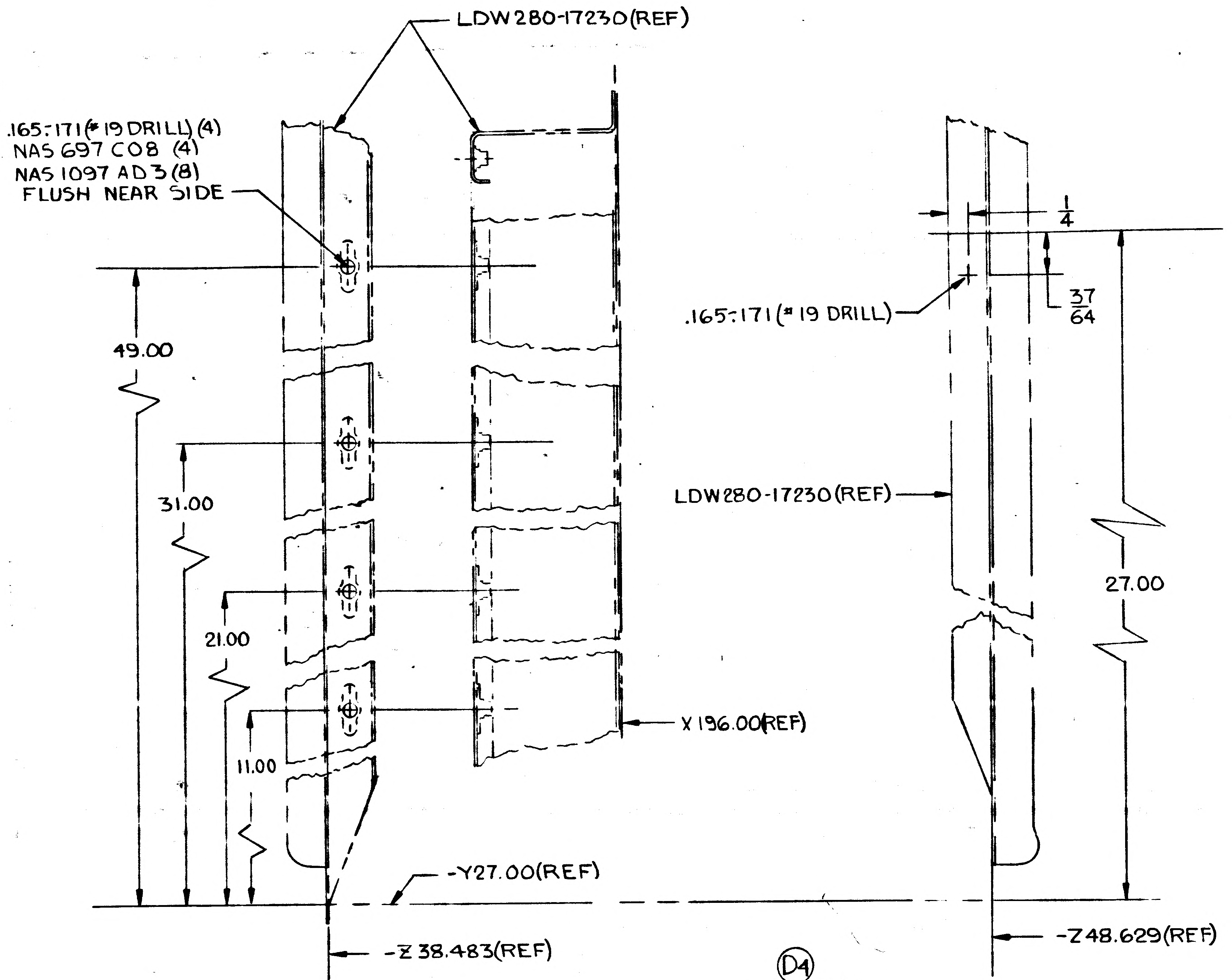
LDW280-17230(REF)
.165-.171(#19 DRILL)(4)
NAS 697 C08 (4)
NAS 1097 AD3(8)
FLUSH NEAR SIDE
49.00
31.00
21.00
11.00
X196.00(REF)
-Y27.00(REF)
-Z38.483(REF)
1/4
.165-.171(#19 DRILL)
37/64
LDW280-17230(REF)
27.00
-Z48.629(REF)

D4

DETAIL BM
(ZONE 4C SH 3.00)
NO SCALE

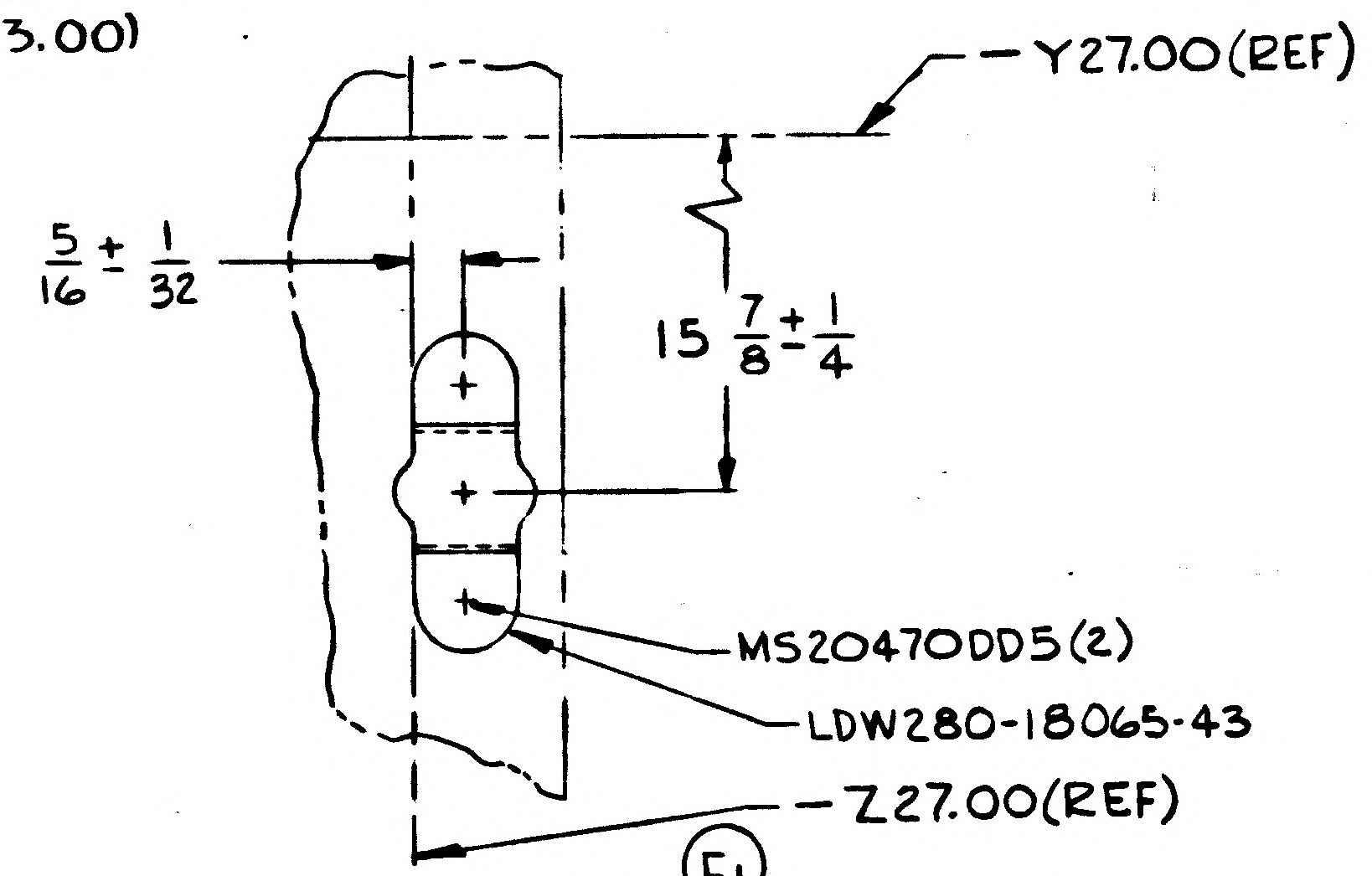
Y27.00(REF)
5/16 ± 1/32
15 7/8 ± 1/4
MS20470DD5(2)
LDW280-18065-43
Z27.00(REF)
F1

DETAIL CC
(ZONE 5B SH 3.00)

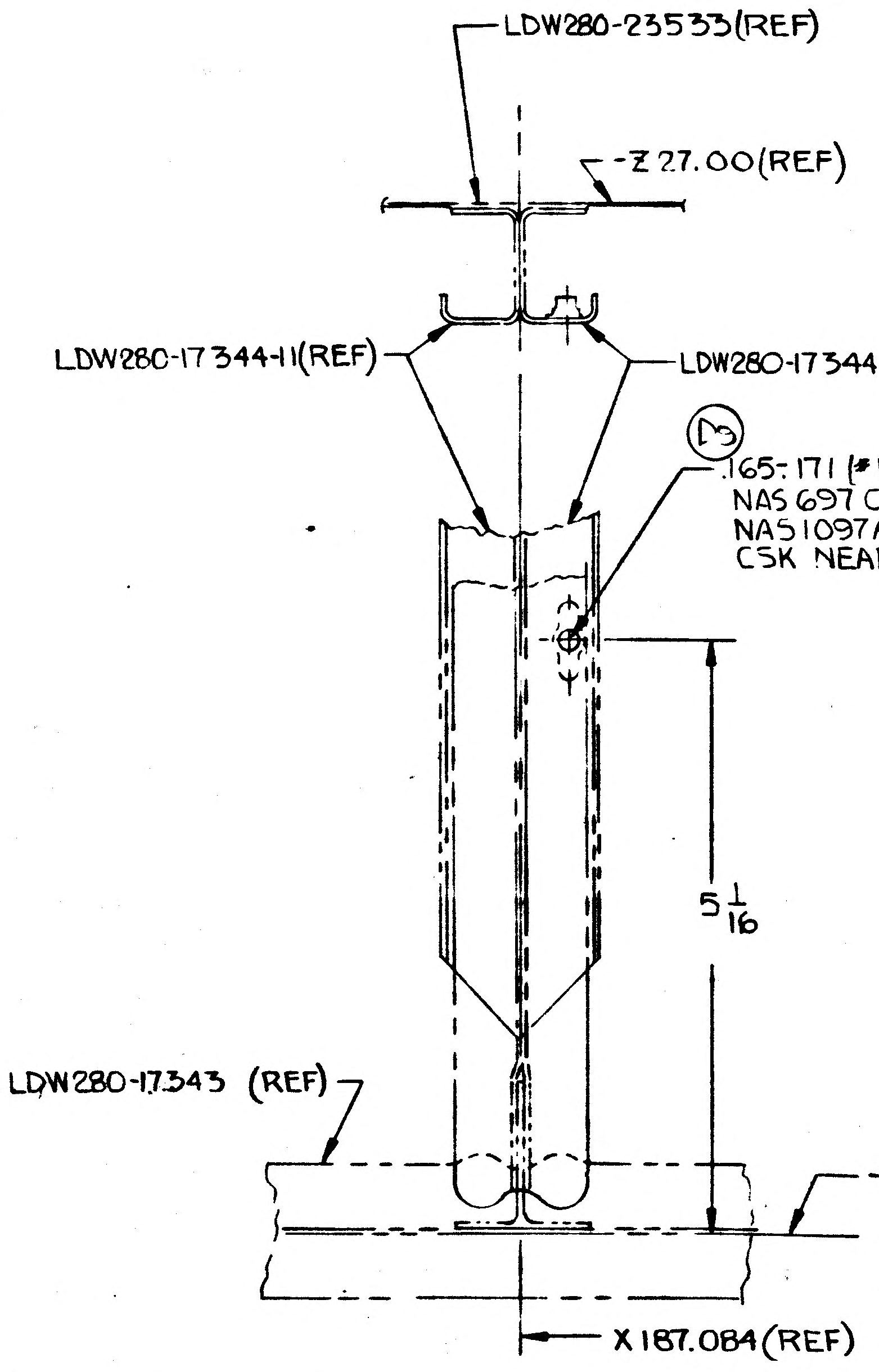
LDW280-23533(REF)
-Z27.00(REF)
LDW280-17344-11(REF)
LDW280-17344-12(REF)
D3
.165-.171 (#19 DRILL)
NAS 697 C08
NAS 1097 AD3 (2)
CSK NEAR SIDE
5 1/16
LDW280-17343 (REF)
-Y38.483(REF)
X187.084(REF)

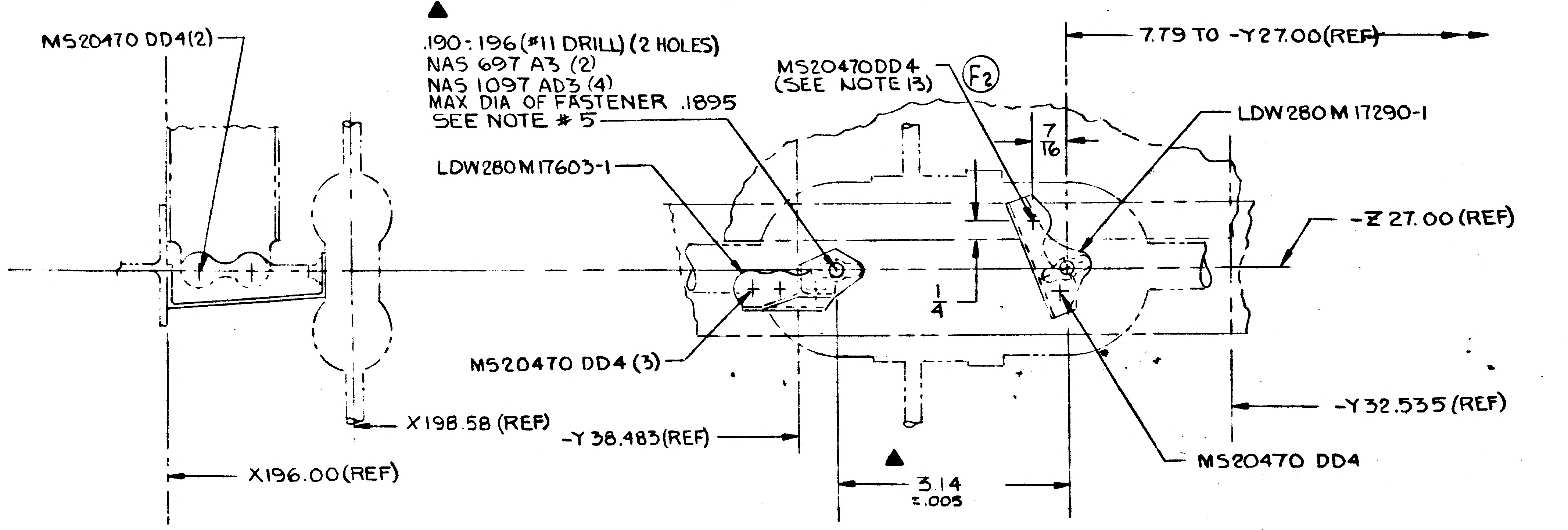
MS20470 DD4(2)
.190-.196 (#11 DRILL) (2 HOLES)
NAS 697 A3 (2)
NAS 1097 AD3 (4)
MAX DIA OF FASTENER .1895
SEE NOTE # 5
MS20470DD4
(SEE NOTE 13)
F2
7.79 TO -Y27.00(REF)
LDW280M17290-1
LDW280M17603-1
7/16
-Z27.00 (REF)
1/4
MS20470 DD4 (3)
X198.58 (REF)
-Y38.483(REF)
3.14
±.005
-Y32.535 (REF)
MS20470 DD4
X196.00(REF)

DETAIL BH
(ZONE 5B SH 3.00)
ROTATED 90° CW

DETAIL BL
(ZONE 5B SH 3.00)

02/02

NAS 9-1100

MANUFACTURING OPERATIONS
UNLESS OTHERWISE SPECIFIED
NOTES CHECKED ✓ APPLY TO THIS DWG.

PART NUMBER
AND ALL OTHER MARKINGS
IN REGION MARKED ☒
USE BOTH SIDES IF NECESSARY.

FILLET AND INSIDE CORNER
RADII TOLERANCES
.016R TO .062R ± .010
.063R TO .250R ± .015
OVER .250R ± .030

DEPTH SHOWN FOR TAPPED
HOLES IS FULL THDS. 2-3 IMP THDS.
BEYOND PERMISSIBLE.

EXTERNAL THREAD LENGTH
SHOWN INCLUDES
2 IMPERFECT THREADS MAX.

DO NOT CADMIUM PLATE & PAINT
HOLES OR SURFACES MARKED
WITH DOUBLE ASTERISK.

MISMATCH STEP OF ± .005
PERMISSIBLE DUE TO CHANGE
OF CUTTERS AT INSIDE
INTERSECTING SURFACES.

DIAMETERS MARKED
MUST BE CONCENTRIC WITHIN
FULL INDICATOR
READING

HOLES MUST BE KEPT FREE OF
CHROME PLATING SOLUTION.

ALL DIMENSIONS SHOWN TO BE MET
AFTER CADMIUM PLATING.
THICKNESS OF PLATE .0003 MIN.
TO .0005 MAX. MIN. THICKNESS TO
BE .0002 ON THREADED AREAS.
NO ALLOWANCE FOR PLATING IN
HOLES

$\overline{125}\sqrt{}$ SURFACE ROUGHNESS
INCLUDING REAMED HOLES
PER MIL-STD-10

$\overline{200}\sqrt{}$ FOR ALL DRILLED HOLES

REMOVE ALL BURRS.
BREAK ALL EDGES .015-.031

INSPECTION INFORMATION
MINIMUM PERMISSIBLE
AVERAGE EDGE DISTANCE
MARKED IS

SYMBOL $\sqrt{}$ DENOTES SURFACE
TO BE MACHINED

UNLESS OTHERWISE SPECIFIED
TOLERANCE ON FLANGES IS ± 1/32

LENGTHS OF AN, NAS & MS AL ALY
RIVETS SHORTER THAN 1 INCH ARE
NOT SPECIFIED.

TOLERANCE ON LOFTED
DELINEATIONS IS

DWG SIZE 34 X 86

PRINTING INFO ONLY
FULL SIZE SHEET AREA (36 X 88)= 22.0 SQ. FT.
1/2 SIZE SHEET AREA (1/4 OF FULL)= 5.5 SQ. FT.

PRINT TRIM LINE

D C B A

LDW280-52587 H

LDW280-52587

GRUMMAN AIRCRAFT ENGRG CORP., BETHPAGE, L. I., NEW YORK

MODEL OR END ITEM	SIZE	CODE IDENT NO.		
LM	J	26512	LDW 280-52587	H
	SCALE NOTED		SHEET 10.0C	

LDW280-52587 SH 10

~~SUPPLEMENTARY DATA~~
~~UNLESS OTHERWISE SPECIFIED NOTES CHECKED ✓ APPLY TO THIS DWG.~~

~~MARK PART NUMBER IN ACCORDANCE WITH MIL-STD-130.~~	
~~PART NUMBER AND ALL OTHER MARKINGS IN REGION MARKED ☒ USE BOTH SIDES IF NECESSARY~~	
~~LENGTHS OF AN NAS & MS AL ALY RIVETS SHORTER THAN 1 INCH ARE NOT SPECIFIED~~	
~~INSTALL RIVETS IN ACCORDANCE WITH~~	

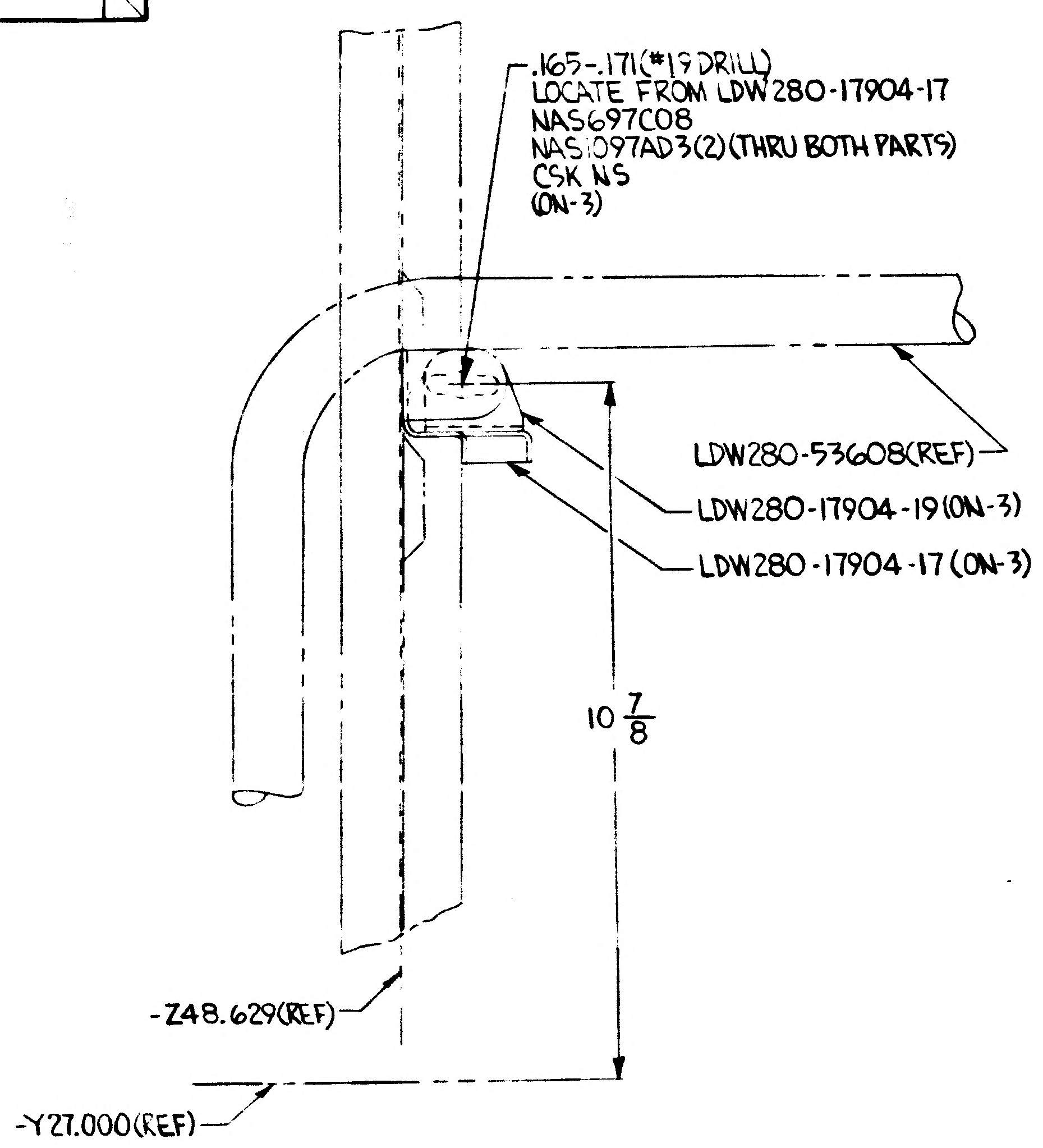
.165-.171(#19 DRILL)
LOCATE FROM LDW280-17904-17
NAS697C08
NAS1097AD3(2)(THRU BOTH PARTS)
CSK NS
(ON-3)
LDW280-53608(REF)
LDW280-17904-19(ON-3)
LDW280-17904-17(ON-3)
10 7/8
-Z48.629(REF)
-Y27.000(REF)

(H4) DETAIL CG
(ZONE 5B SHT. 3)

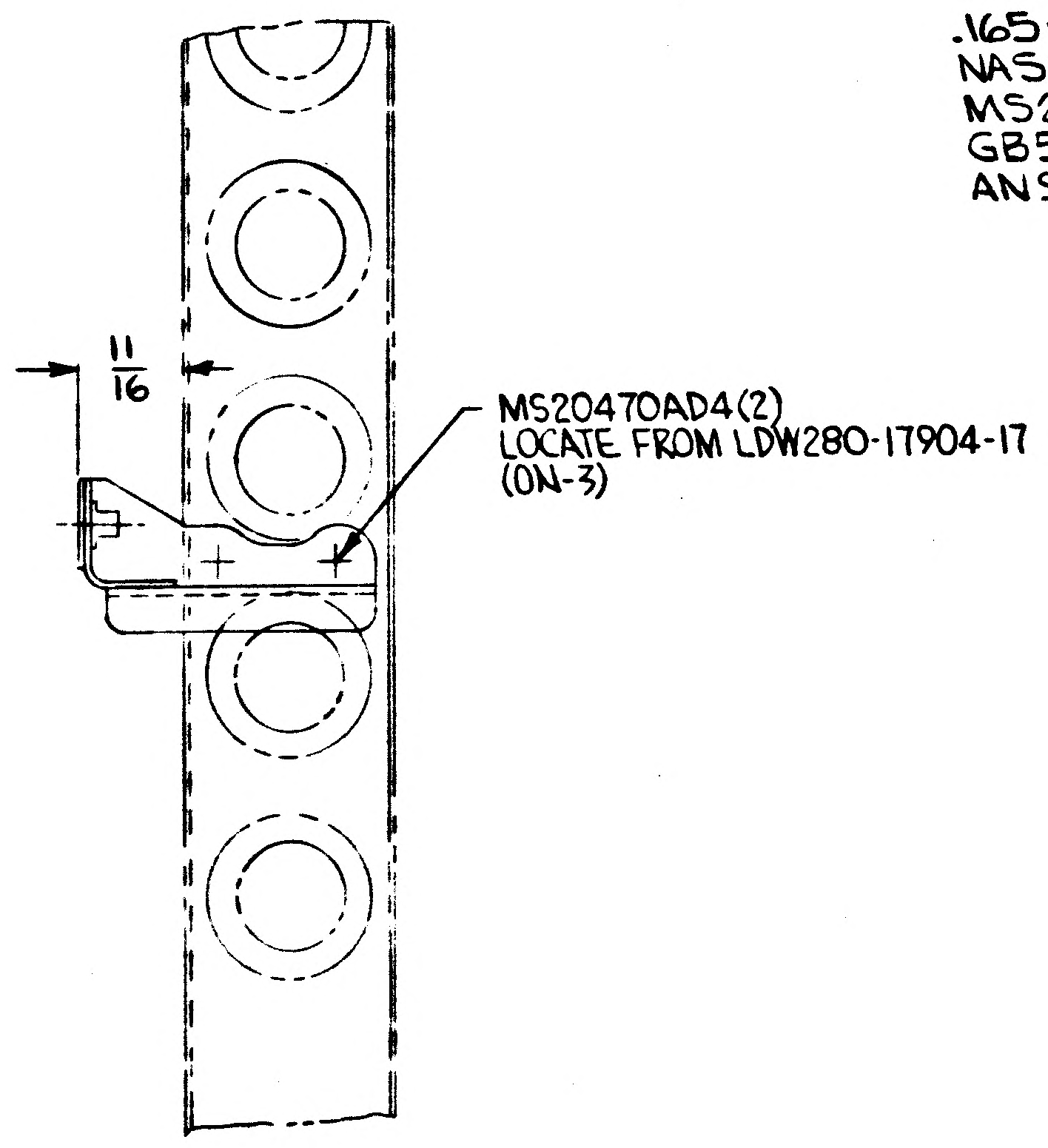
11/16
MS20470AD4(2)
LOCATE FROM LDW280-17904-17
(ON-3)

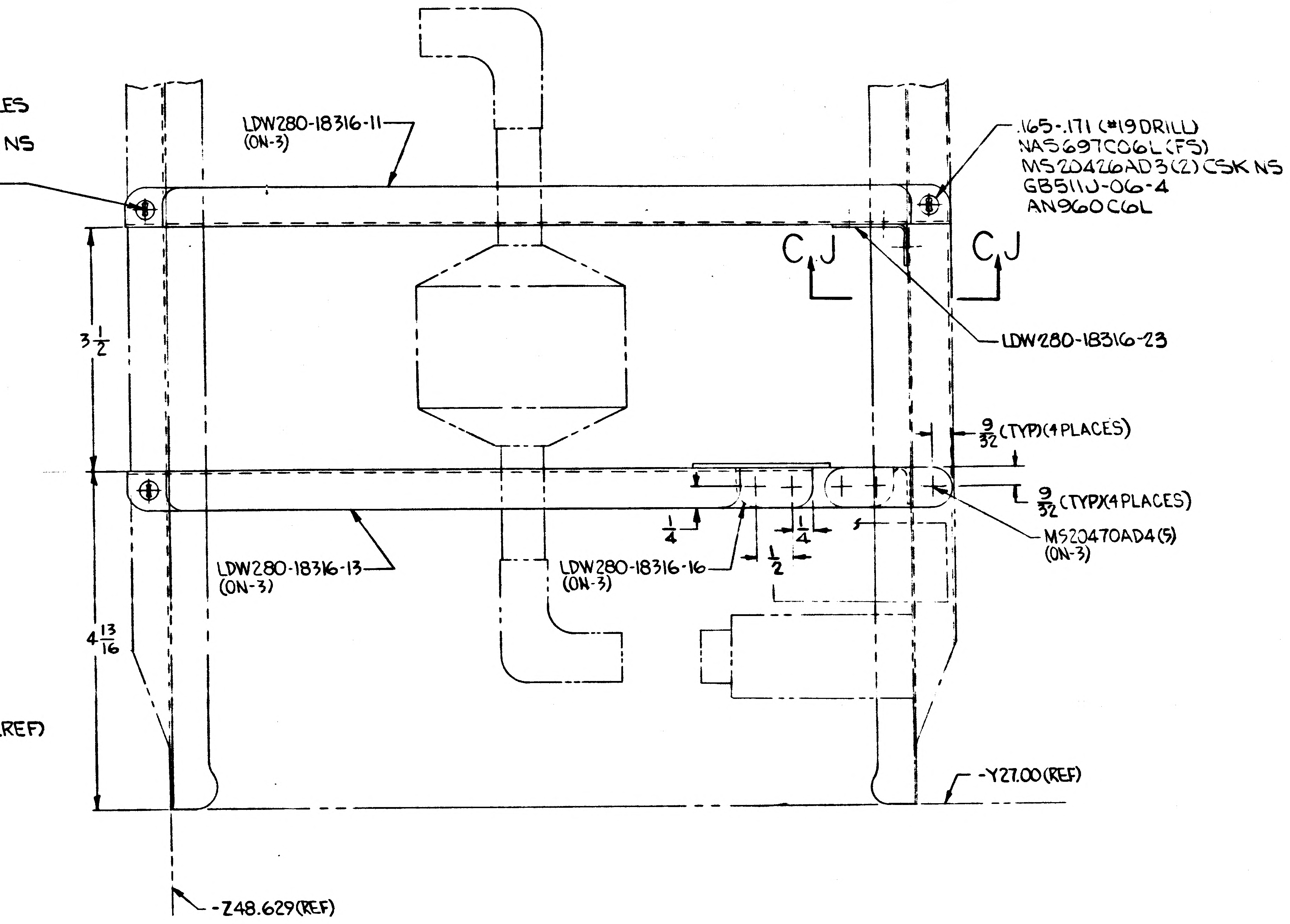
.165-.171(#19DRILL) 2 HOLES
NAS697C06L(2) FS
MS20426AD3(4) CSK NS
GB511J-06-5(2)
AN960C6L(2)
LDW280-18316-11
(ON-3)
.165-.171 (#19DRILL)
NAS697C06L(FS)
MS20426AD3(2) CSK NS
GB511J-06-4
AN960C6L
CJ
CJ
LDW280-18316-23
3 1/2
9/32 (TYP)(4 PLACES)
9/32 (TYP)(4 PLACES)
MS20470AD4(5)
(ON-3)
1/4
1/4
1/2
LDW280-18316-13
(ON-3)
LDW280-18316-16
(ON-3)
4 13/16
-Y27.00(REF)
-Z48.629(REF)

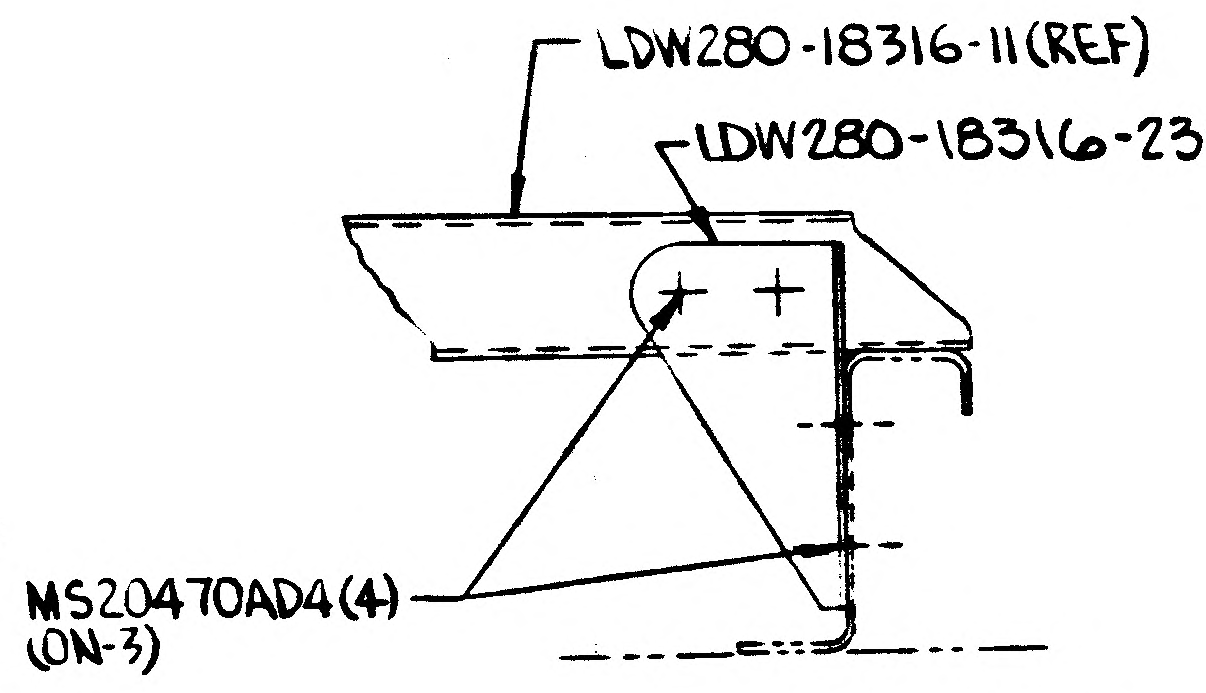
LDW280-18316-11(REF)
LDW280-18316-23(REF)
MS20470AD4(4)
(ON-3)

SECTION CJ-CJ

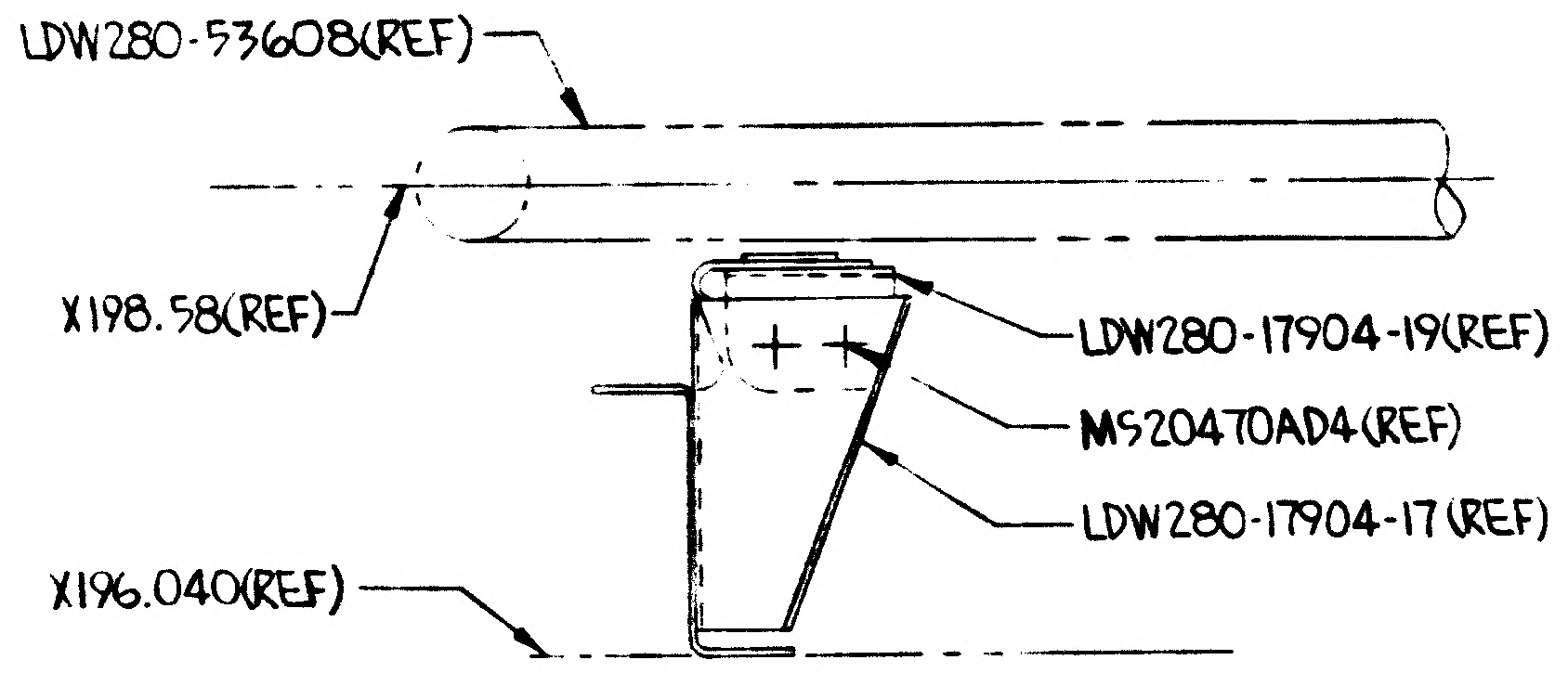
LDW280-53608(REF)
X198.58(REF)
LDW280-17904-19(REF)
MS20470AD4(REF)
LDW280-17904-17(REF)
X196.040(REF)

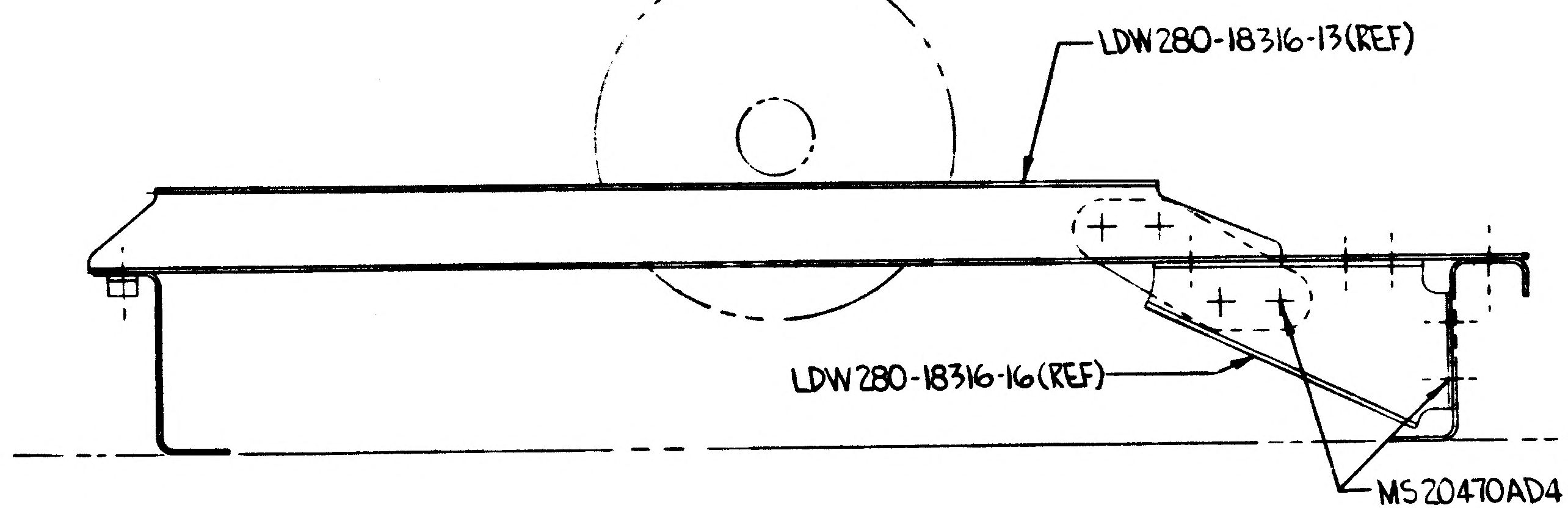
LDW280-18316-13(REF)
LDW280-18316-16(REF)
X196.00(REF)
MS20470AD4(6)
(ON-3)

(H5) VIEW CH-CH
(ZONE 4B SHT. 3)

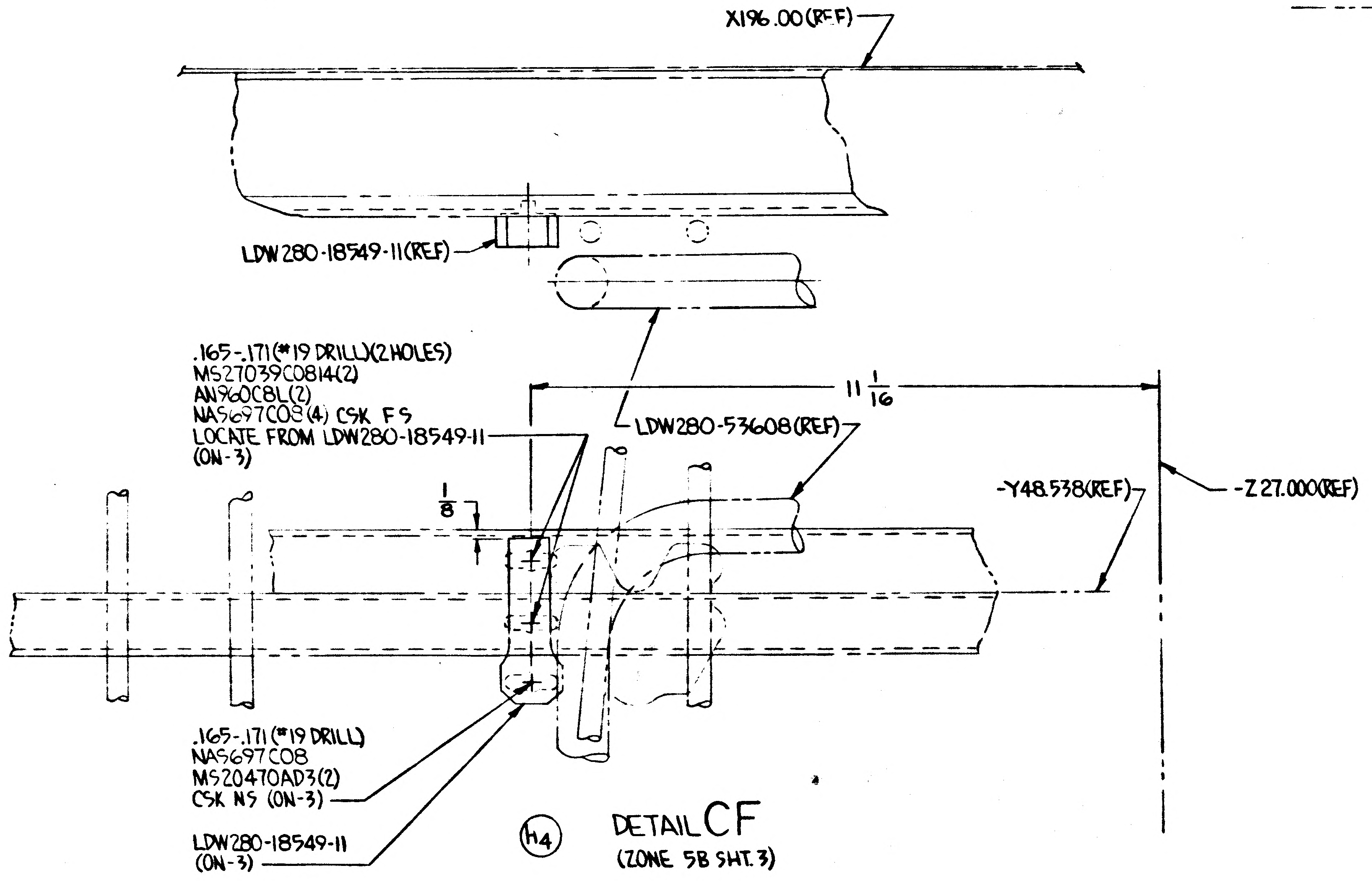
X196.00(REF)
LDW280-18549-11(REF)
.165-.171(#19 DRILL)(2 HOLES)
MS27039C0814(2)
AN960C8L(2)
NAS697C08(4) CSK FS
LOCATE FROM LDW280-18549-11
(ON-3)
11 1/16
LDW280-53608(REF)
-Y48.538(REF)
-Z27.000(REF)
1/8
.165-.171(#19 DRILL)
NAS697C08
MS20470AD3(2)
CSK NS (ON-3)
LDW280-18549-11
(ON-3)

(H4) DETAIL CF
(ZONE 5B SHT. 3)

NAS 9-1100

GRUMMAN AIRCRAFT ENGINEERING CORPORATION
BETHPAGE, NEW YORK 11714

SIZE	CODE IDENT NO.		
E	26512	LDW280-52587	H
SCALE FULL		SHEET 13.06	

~~SUPPLEMENTARY DATA~~
~~UNLESS OTHERWISE SPECIFIED NOTES CHECKED ✓ APPLY TO THIS DWG.~~

~~MARK PART NUMBER IN ACCORDANCE WITH MIL-STD-130~~	
~~PART NUMBER AND ALL OTHER MARKINGS IN REGION MARKED ☒ USE BOTH SIDES IF NECESSARY~~	
~~LENGTHS OF AN. NAS & MS AL ALY RIVETS SHORTER THAN 1 INCH ARE NOT SPECIFIED.~~	
~~INSTALL RIVETS IN ACCORDANCE WITH~~	

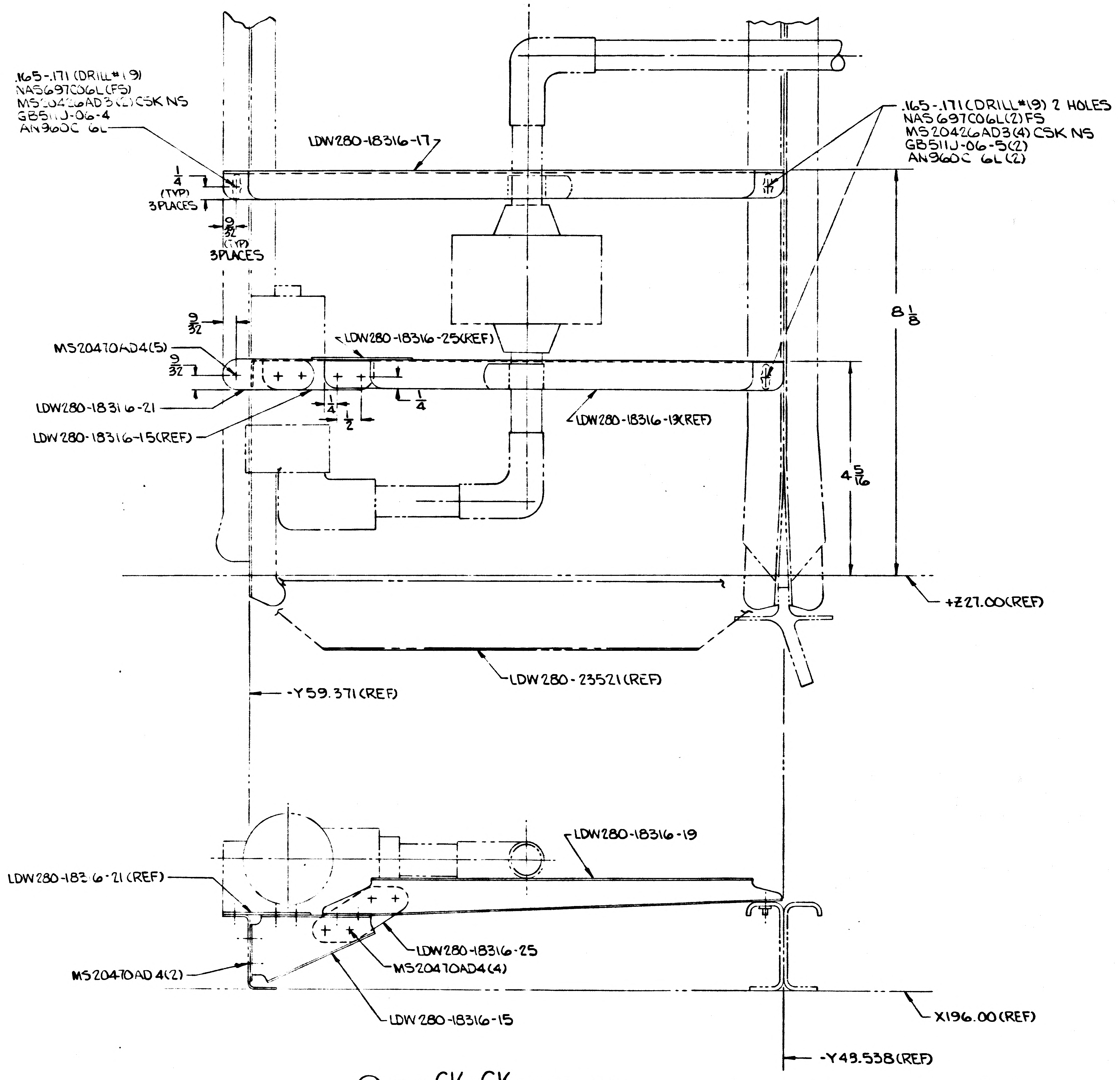
.165-.171 (DRILL#19)
NAS697C06L(FS)
MS20426AD3(2)CSK NS
GB511J-06-4
AN960C 6L
LDW280-18316-17
1/4 (TYP) 3PLACES
9/32 (TYP) 3PLACES
.165-.171(DRILL#19) 2 HOLES
NAS697C06L(2)FS
MS20426AD3(4)CSK NS
GB511J-06-5(2)
AN960C 6L(2)
8 1/8
9/32
LDW280-18316-25(REF)
MS20470AD4(5)
9/32
1/4
LDW280-18316-21
LDW280-18316-15(REF)
1/4
1/2
LDW280-18316-19(REF)
4 5/16
+Z27.00(REF)
LDW280-23521(REF)
-Y59.371(REF)
LDW280-18316-19
LDW280-183·6-21 (REF)
LDW280-18316-25
MS20470AD4(4)
MS20470AD 4(2)
LDW280-18316-15
X196.00(REF)
-Y49.538(REF)

(H7) VIEW CK-CK (ZONE 5A SH3)
(ON-3)
ROTATED 90° CW

Q1 NAS 9-1100

GRUMMAN AIRCRAFT ENGINEERING CORPORATION
BETHPAGE, NEW YORK 11714

SIZE	CODE IDENT NO.		
E	26512	LDW280-52587	H

SCALE
SHEET

ENG 32.1 REV 3-65

GRUMMAN AIRCRAFT ENGINEERING CORP.
CODE IDENT NO. 26512

ENGINEERING ORDER

DWG. NO. LDW280-52587		EO NO. J1
CONTROL INFO NO. LDW280B3541		

ON-3 REMOVE LDW280-17904-17 & 19, LDW280-18549-11 AS SHOWN:

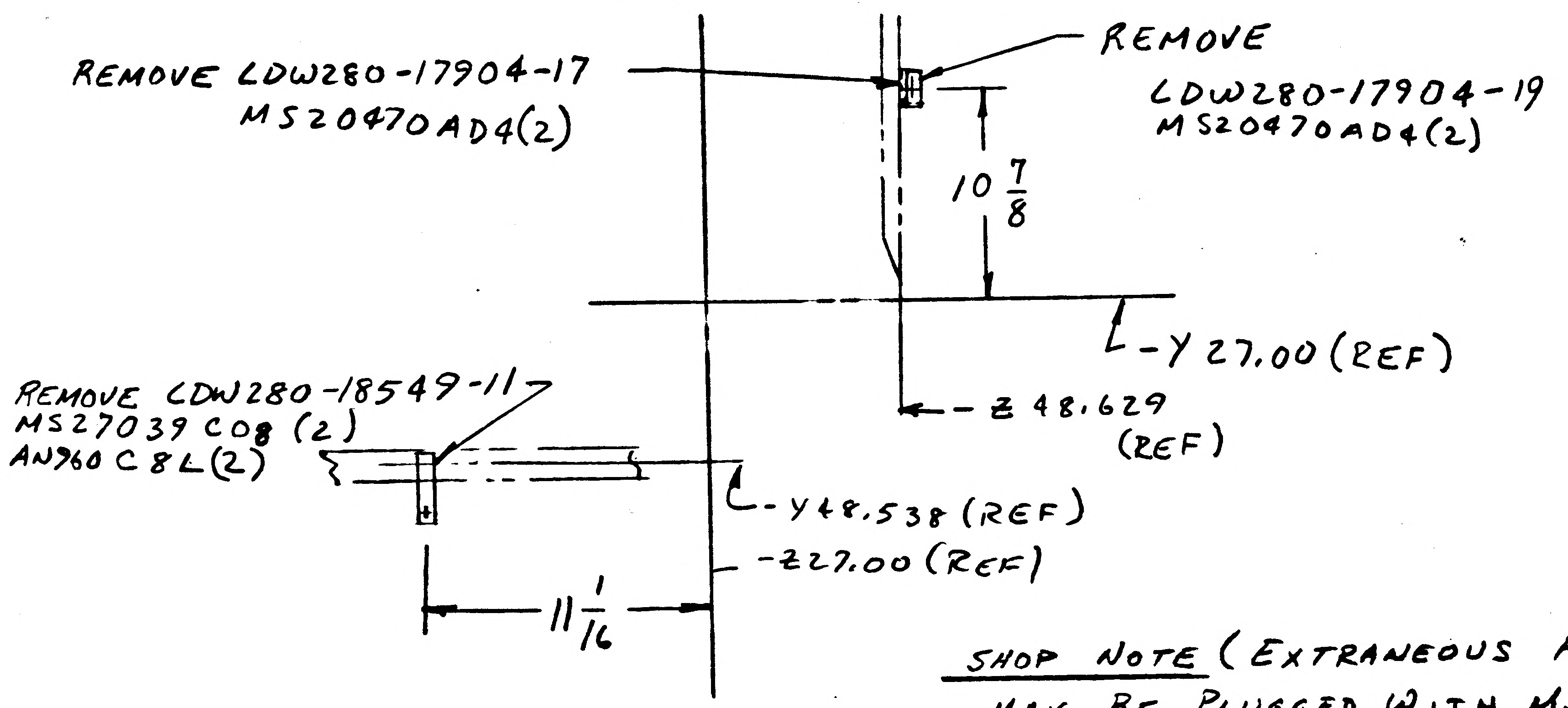
REMOVE LDW280-17904-17
MS20470AD4(2)
REMOVE
LDW280-17904-19
MS20470AD4(2)
10 7/8
Y 27.00 (REF)
Z 48.629 (REF)
REMOVE LDW280-18549-11
MS27039 C08 (2)
AN960 C8L(2)
Y48.538 (REF)
-Z27.00 (REF)
11 1/16

SHOP NOTE (EXTRANEOUS HOLES MAY BE PLUGGED WITH MS20470 AD" ".)

DETAIL SPEC REQ	☐	CL II ENGRG CHG	☐	CL I ENGRG CHG	✓	LCD 2729 CCA 959 PKG 3 ⑤

REASON FOR EO: PARTS ARE NOT REQD FOR BURST DISC SUPPORT

DESCRIPTION OF EO: ON-3 REMOVED: LDW280-17904-17 & -19 LDW280-18549-11, MS27039 C08(2), AN960C8L(2) MS20470AD4(4).

GAEC EO RELEASE: C JK 5/21/68

MODEL	PROCURING ACTIVITY NO.	GAEC UNIT NO.	SUB CONTR UNIT NO.
LM		LM 3 (33)	

DRAWING CHANGE REQD: REVISE DWG	RECORD EO	DISPOSITION OF PARTS: REWORK	SCRAP
✓		✓	

		SUPPORT	RELIAB. GROUP	GROUP LEADER	STRESS GROUP	LIAISON ENGRG	PROJ ENGRG
APPROVED BY				RBT	NM	JAP	
DATE	5/20/68			5-20-68	5/20/68	5/20/68	5-20-68
P	VD1						

PRIORITY: C

DRAWING TITLE: SUPT INSTL D/S - UP. DECK He DISTR, FUEL

DRAWING NO.: LDW280-52587

EO NO.: J1

CDR 5-22-68 G.J.

ISSUED BY DON RAGAS x1153 SECTION VD1 GROUP NO. 280 PL 25

01 NAS 9-1100

ENG 22.1 REV 3-65

GRUMMAN AIRCRAFT ENGINEERING CORP.
CODE IDENT NO. 26512

ENGINEERING ORDER

DWG. NO. LDW280-52587

EO NO. J2

CONTROL INFO NO. LDW280B3456

1. ON LDW280-52587-1 ASSY, PARTS LDW280-17424-11 & -13 (1 EA. REQ'D) WERE ERRONEOUSLY REMOVED FROM B/M. REF. G CHANGE EO F8. REINSTATE PARTS FOR 52587-1 ASSY.

DETAIL SPEC REQ	✓	CL II ENGRG CHG	☐	CL I ENGRG CHG	☐

REASON FOR EO: PARTS ERRONEOUSLY REMOVED FROM B/M

DESCRIPTION OF EO: ON LDW280-52587-1 ASSY PARTS LDW280-17424-11 & -13 (1 EA. REQ'D) WERE ERRONEOUSLY REMOVED FROM B/M. REF. G. CHANGE EO F8. REINSTATE PARTS FOR 52587-1 ASSY.

GAEC EO RELEASE: WT 5-21-68

MODEL	EFFECTIVITY: PROCURING ACTIVITY NO.	EFFECTIVITY: GAEC UNIT NO.	EFFECTIVITY: SUB CONTR UNIT NO.
LM		NOT REQ	

DRAWING CHANGE REQD: REVISE DWG ✓ RECORD EO

DISPOSITION OF PARTS: NOT AFFECTED (REWORK / SCRAP)

APPROVED BY								
DATE	5/15/68			5-15-68	5/17/68		5/17/68	5-21-68
	V.D.I.	SUPPORT	RELIAB. GROUP	GROUP LEADER	STRESS GROUP	LIAISON ENGRG	PROJ ENGRG	~~GOVT~~

PRIORITY	DRAWING TITLE	DRAWING NO.	EO NO.
E	SUPPORT INSTAL DESCENT STAGE - UPPER DECK NE DISTR. FUEL OX, H_2O & GLYCOL LINE	LDW280-52587	J2

ISSUED BY E.V.R. CASE/H. PALLMEYER X1153 SECTION V.D.I./P. THORJUSEN GROUP NO. 335 PL 25

01

NAS 9-1100

GRUMMAN AIRCRAFT ENGINEERING CORP.
CODE IDENT NO. 26512
ENGINEERING ORDER

ENG 32.1 REV 3-65

DWG. NO. LDW280-52587 | EO NO. J3
CONTROL INFO NO. LDW280B3519

ON-3 VIEW CH-CH (SHT 13) REVISE DIM'S AS SHOWN

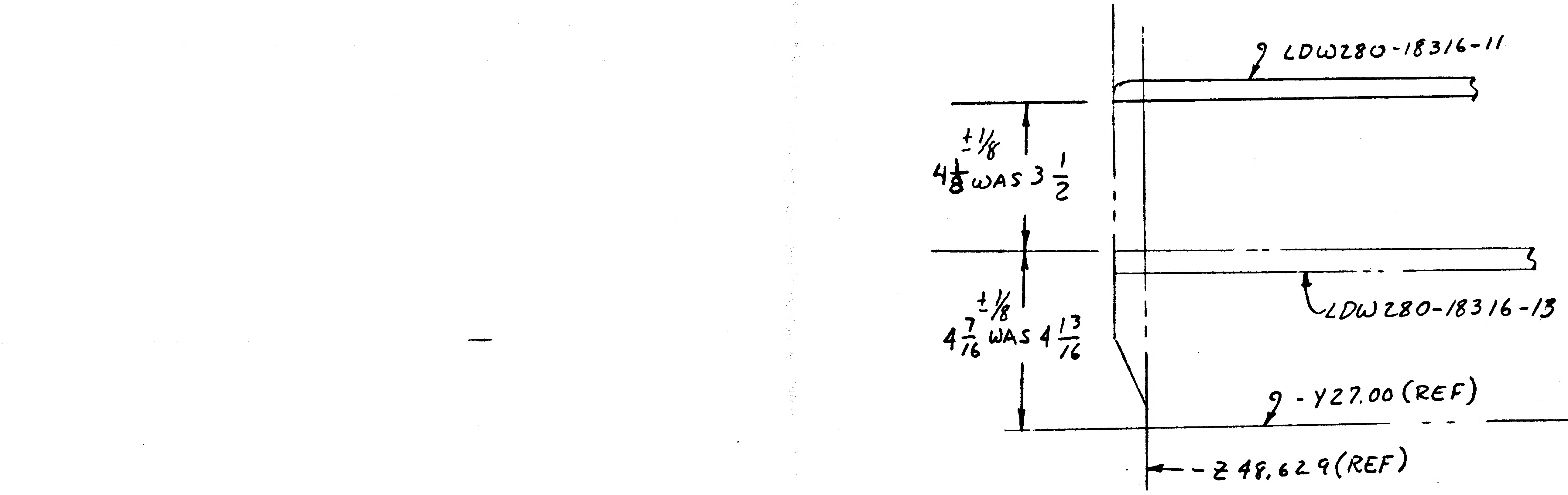
LDW280-18316-11
$4\frac{1}{8}\pm\frac{1}{8}$ WAS $3\frac{1}{2}$
LDW280-18316-13
$4\frac{7}{16}\pm\frac{1}{8}$ WAS $4\frac{13}{16}$
Y27.00 (REF)
Z 48.629 (REF)

SHOP NOTE (DO NOT INCORP ON DWG.)
(EXTRANEOUS HOLES MAY BE PLUGGED WITH MS20470DD" !)

DETAIL SPEC REQ	☐	CL II ENGRG CHG	☑	CL I ENGRG CHG	☐	LCD 2721 CCA959 PKG. 3

REASON FOR EO: TO ELIMINATE INTERFERENCE WITH F.I.T.H. SUPT.

DESCRIPTION OF EO: ON-3 VIEW CH-CH. REVISED DIM'S $4\frac{1}{8}\pm\frac{1}{8}$ WAS $3\frac{1}{2}$ & $4\frac{7}{16}\pm\frac{1}{8}$ WAS $4\frac{13}{16}$

GAEC EO RELEASE: C (5) VK 5/22/68

MODEL	EFFECTIVITY: PROCURING ACTIVITY NO.	GAEC UNIT NO.	SUB CONTR UNIT NO.
LM		LM 3 (33)	

DRAWING CHANGE REQD: REVISE DWG ✓ | RECORD EO
DISPOSITION OF PARTS: REWORK ✓ | SCRAP

	VDI	SUPPORT	RELIAB. GROUP	GROUP LEADER	STRESS GROUP	LIAISON ENGRG	PROJ ENGRG	
APPROVED BY								
DATE	5/18/68			5-18-68	5/18/68		5/18/68	5-21-68

PRIORITY: C
DRAWING TITLE: SUPT INSTL D/S-FUEL, OX LINES
DRAWING NO.: LDW280-52587
EO NO.: J3

CDR 052068 G.Z.
ISSUED BY DON RAGAS X1153 SECTION VDI GROUP NO. 280 PL 25

01

NAS 9-1100

REVISIONS

FOR CONTINUATION OF REVISIONS SEE SHEET 1.11

CHANGE LTR	ITEM NO.	SHEET NO.	ZONE	GRUMMAN INFO ONLY	DET SPEC	CLASS I	CLASS II	ENGRG ORDER	DESCRIPTION	EFFECTIVITY	DISPOSITION OF EXISTING PARTS REWORK	DISPOSITION OF EXISTING PARTS SCRAP	CHANGED BY AND DATE	ENGRG APPD	GOVT APPD
A	1	3.00						A1 LE0280-377	ADDED NOTE 13	LM-2(32)	NOT	REQ'D	J. H. FARRELL 3/20/67		
	2	3.00						EO A2	REVISED NOTE 9 "TORQUE GN511L-0420 NUTS" WAS "TORQUE MS21043-4 NUTS"						
		7.00	45A 46A 47A						ADDED "GN511L-0420(3) SEE NOTE 9" & "MS21043-4 (3) SEE NOTE 8" TO DETAILS M,N,P&Q						
		7.00	49C						ADDED "MS21043-4(8) SEE NOTE 8"						
	3	4.00 5.00 6.00 7.00	5C 21D 30B 31B 31C 32B 47C 48A 48B 50B				✓	A3	REVISED ALL GT11F-BR-08 TO READ GT11J-BR08						
		4.00	3D 6B						ADDED DETAIL AV						
		4.00	3A						REVISED LDW280M16125-1(4) WAS (2)						
		4.00	6C 26C						ON PLAN VIEW & VIEWS A-A & B-B REROUTED 21856-1, 28654-1, 52857-1 (REF) & ADDED CLAMP						
		4.00	9D						REVISED "GB511J-08-2 (4), AN960D8L(8), MS21042L08(4)" WAS "GB511J-04-2 (4), AN960D4L(8), MS21042L04(4)"						
		4.00	13A						REVISED "SPLICE IN THIS AREA (SEE NOTE 4)" WAS "SPLICED IN THIS AREA (SEE NOTE 11)"						
		5.00	17B 19B						ADDED CLAMP TO BOTTOM DECK, REMOVED SECT. AP-AP						
		6.00	33B						RELOCATED 20A123 & 20A124. REROUTED 28654-1(REF)						
		4.00	6A						REROUTED 51612-1(REF), 51716(REF), 52531-1(REF), 52857-1(REF) 28654-1(REF), 21856-1(REF). RELOCATED CLAMPS (2)						
		7.00	48B						REMOVED "AN4-5A, AN960D416L, MS21042L4"						
		7.00	48B 49B 49C						REROUTED 52652-1 (REF)						

CHG APPROVED

LTR	GROUP LDR	VEH DES INT	STRUCTURES	STRUCTURES	WEIGHTS
A			P. 1.14	—	

GRUMMAN AIRCRAFT ENGRG CORP., BETHPAGE, L. I., NEW YORK

SIZE	CODE IDENT NO.		
B	26512	LDW280-52607	A
SCALE NONE		SHEET 1.10	

ENG 77.16 3-66

01

NAS 9-1100

REVISIONS FOR CONTINUATION OF REVISIONS SEE SHEET 1.12

CHANGE LTR	ITEM NO.	SHEET NO.	ZONE	GRUMMAN INFO ONLY	DET SPEC	CLASS I	CLASS II	ENGRG ORDER	DESCRIPTION	EFFECTIVITY	DISPOSITION OF EXISTING PARTS REWORK	DISPOSITION OF EXISTING PARTS SCRAP	CHANGED BY AND DATE	ENGRG APPD	GOVT APPD
A		7.00	49C					A3	ADDED PICTURE OF CLIPS. ADDED "AN4-5A (3), AN960D416L(6), MS21042L4(3). REROUTED ASCENT GRD CABLE.	LM-2(32)	NOT	REQ'D	J. H. FARRELL 3/20/67		
		7.00	48A						REMOVED AN4-5A(2), AN960D416L(4), MS21042L4(2)						
		7.00	50A						REVISED 4CB182 (REF) WAS 4CB18 (REF)						
		7.00	50A						ADDED "GB511J-06-2(4), AN960D6L(8), MS21042L06(4)"						
		7.00	50B						REROUTED 52857-1 (REF) & RELOCATED CLIP						
		7.00	50C						REROUTED 21948-1 (REF) & ADDED CLAMP						
		7.00	39B						ADDED GC500S-4W FOR ADDITIONAL SUPPORT OF PIGTAIL FROM 10MT-1 (REF)						
	4	4.00	8B 8C					A4	ADDED GA2681D (REF), GA2682D(REF), GA2683D (REF)						
		4.00	7B 8B						ADDED VENDOR WIRE ROUTING						
		4.00	8B						ADDED BOND PER NOTE 7						
	5.	6.00	27B					A5	RELOCATED CLAMP & REROUTED 52652-1 (REF)						
	6	7.00	50A				✓	A6	ADDED LSC390-19-211 DUST CAP TO EXTERNAL CONN J164 (REF)						
	7	4.00 6.00	5C 5D 6B 6C 26C 27B 27C					A7	ADDED 510774-001 (REF) ROUTING & CALLOUTS						
		4.00	5C 6B 6C						ADDED 20TC110 (REF) 20TC111 (REF) 20TC112 (REF)						
	8	4.00	7A					A8	REROUTED 51612-1(REF), 51716-1(REF), 52531-1(REF) & 28654-1 (REF) 52857-1(REF). REMOVED CLAMP FROM OLD ROUTING & TURNED CLAMP FOR NEW ROUTING						
		4.00	7A						REMOVED 52531-1 (REF)						
		6.00	33C						REROUTED 28654-1 (REF) REMOVED CLAMP FROM OLD ROUTING. ADDED CLAMP TO NEW ROUTING						

CHG APPROVED

LTR	GROUP LDR	VEH DES INT	STRUCTURES	STRUCTURES	WEIGHTS
A			Sep.114		

GRUMMAN AIRCRAFT ENGRG CORP., BETHPAGE, L. I., NEW YORK

SIZE	CODE IDENT NO.		
B	26512	LDW280-52607	A
SCALE NONE			SHEET 1.11

ERG 77.16 3-66

01

NAS 9-1100

REVISIONS FOR CONTINUATION OF REVISIONS SEE SHEET 1.13

CHANGE LTR	ITEM NO.	SHEET NO.	ZONE	GRUMMAN INFO ONLY	DET SPEC	CLASS I	CLASS II	ENGRG ORDER	DESCRIPTION	EFFECTIVITY	DISPOSITION OF EXISTING PARTS REWORK	DISPOSITION OF EXISTING PARTS SCRAP	CHANGED BY AND DATE	ENGRG APPD	GOVT APPD
A	9	4.00	7B					A9	ADDED IDENTITY FOR VENDOR WIRE 510911-201 (REF)	LM-2(32)	NOT	REQ'D	J. H. FARRELL 3/20/67		
		4.00	8B						ADDED J3(REF) (TYP 3 PLACES), & J1(REF) (TYP 3 PLACES)						
	10	1.00						A10 LEO280-468	ADDED SH 3.01						
	11	2.00							REVISE B/M IN ACCORDANCE WITH EO A2, A3, A6 ADDED GN511L-0420 (12), GT11J-BR08-10(5), GT11J-BR08-12(20), GB511J-08-2(4), AN960D8L(8), MS21042L08(4), GB511J-06-2(4), AN960D6L(8), MS21042L06(4), GL500S-4W (1), LSC390-19-211, MS35206-245(3), LDW280M16125-1(2), DELETED MS21043-4(12), GT11F-BR-08-10(5), GT11F-BR-08-12(20), GB511J-04-2(4), AN960D4L(8), MS21042L04(4)						
	12	4.00	3A						REMOVED GB511J-3-2(4), AN960D10L(8), MS21042L3(4)						
	13	4.00	3A					REF EO A3	REVISED LDW280M16125(REF) WAS LDW280M16125-1(4)						
	14	4.00	3D					REF EO A3	REVISED GS550C-08S8(3), AN960D8L(3) WAS MS35206-245(3)						
	15	4.00	13A 11B 11C 12A 12D 13A				✓		RELOCATED SPLICE IN 28654-1(REF) CABLE						
	16	NOTED							REMOVED SPLICES FROM 28654-1(REF) CABLE ON SH 4, ZONES 2B,2C,3B,3C, 10B,10C,11B,11C,12A,12B,12C,12D,13A,13B,13C,13D						
	17	4.00	2B 13A						REROUTED 52652-1(REF) CABLE						
	18	4.00	11B 13D						REROUTED 52857-1(REF) CABLE						
	19	4.00	1B 2B						ADDED 52857-1(REF) ROUTING & CALLOUT						

CHG APPROVED

LTR	GROUP LDR	VEH DES INT	STRUCTURES	STRUCTURES	WEIGHTS
A	JWolf	JWolf	p.1.14		

GRUMMAN AIRCRAFT ENGRG CORP., BETHPAGE, L. I., NEW YORK

SIZE	CODE IDENT NO.		
B	26512	LDW280-52607	A
SCALE NONE		SHEET 1.12	

ENG 77.16 3-66

01 NAS 9-1100

REVISIONS FOR CONTINUATION OF REVISIONS SEE SHEET 1.14

CHANGE LTR	ITEM NO.	SHEET NO.	ZONE	GRUMMAN INFO ONLY	DET SPEC	CLASS I	CLASS II	ENGRG ORDER	DESCRIPTION	EFFECTIVITY	DISPOSITION OF EXISTING PARTS		CHANGED BY AND DATE	ENGRG APPD	GOVT APPD
											REWORK	SCRAP			
A	20	4.00	3C						ADDED 52857-1(REF) CABLE	LM-2(32)	NOT	REQ'D	J. H. FARRELL 3/20/67		
	21	7.00	44A 45A 45B 45C 46B 46C						FROM VIEW R-R COMPLETELY REMOVED PICTURE OF OUTRIGGERS, LANDING LEG, LANDING LEG CROSS BRACE, SECONDARY STRUT & LANDING PAD WITH ASSOCIATED CABLES & CALLOUTS						
	22	7.00	44B						REMOVED VIEW L-L						
	23	NOTED							ADDED "SPLICE IN THIS AREA (SEE NOTE 4)" TO SH 5, ZONE 16D,17A,18B, 18C,18D,23B,23C						
	24	6.00	33B						REMOVED PICTUREOF PIPE FROM DWG						
	25	7.00	50C 51C				✓		REROUTED 51776-1(REF), 21948-1(REF), 28654-1(REF) ,52857-1(REF). REVISED PICTURE OF DISC. BRKT						
	26	7.00	51C						ADDED VIEW BC-BC						
	27	4.00	3B 3C 10B 10C 13B 13C						REROUTED 52652-1(REF), & 52857-1(REF) FROM OUTRIGGERS TO LANDING LEGS						
	28	4.00	3C 11C 13B 13D						REVISED FOR CONTINUATION SEE SH 8 ZONE 58D 61D 59D ZONE 60C WAS FOR CONTINUATION SEE SH 7 VIEW R-R						
	29	7.00	50C					REF EO A3	CANCELLED REROUTE CABLE 21948-1(REF) AS CALLED FOR BY EO A3						

CHG APPROVED

LTR	GROUP LDR	VEH DES INT	STRUCTURES	STRUCTURES	WEIGHTS
A	JWolf		P.T.K.		

GRUMMAN AIRCRAFT ENGRG CORP., BETHPAGE, L. I., NEW YORK

SIZE	CODE IDENT NO.		
B	26512	LDW280-52607	A
SCALE NONE			SHEET 1.13

ENG 77.16 3-66

01

NAS 9-1100

61 60 59 58

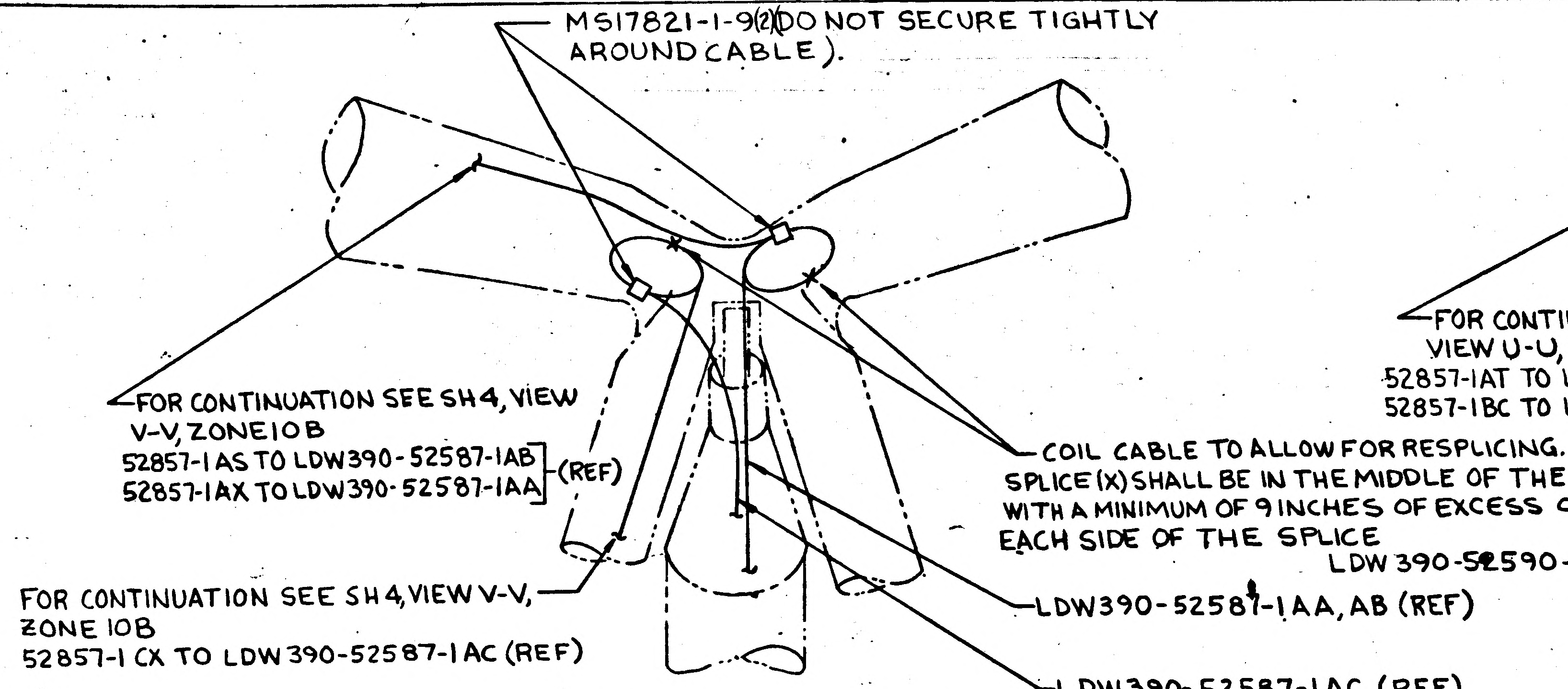

MS17821-1-9(2)(DO NOT SECURE TIGHTLY AROUND CABLE).
FOR CONTINUATION SEE SH4, VIEW V-V, ZONE 10B
52857-1AS TO LDW390-52587-1AB (REF)
52857-1AX TO LDW390-52587-1AA (REF)
COIL CABLE TO ALLOW FOR RESPLICING. SPLICE(X) SHALL BE IN THE MIDDLE OF THE COIL WITH A MINIMUM OF 9 INCHES OF EXCESS CABLE ON EACH SIDE OF THE SPLICE
FOR CONTINUATION SEE SH4, VIEW V-V, ZONE 10B
52857-1CX TO LDW390-52587-1AC (REF)
LDW390-52587-1AA, AB (REF)
LDW390-52587-1AC (REF)

SECTION AZ-AZ ZONE 57D
(-7 INSTL)

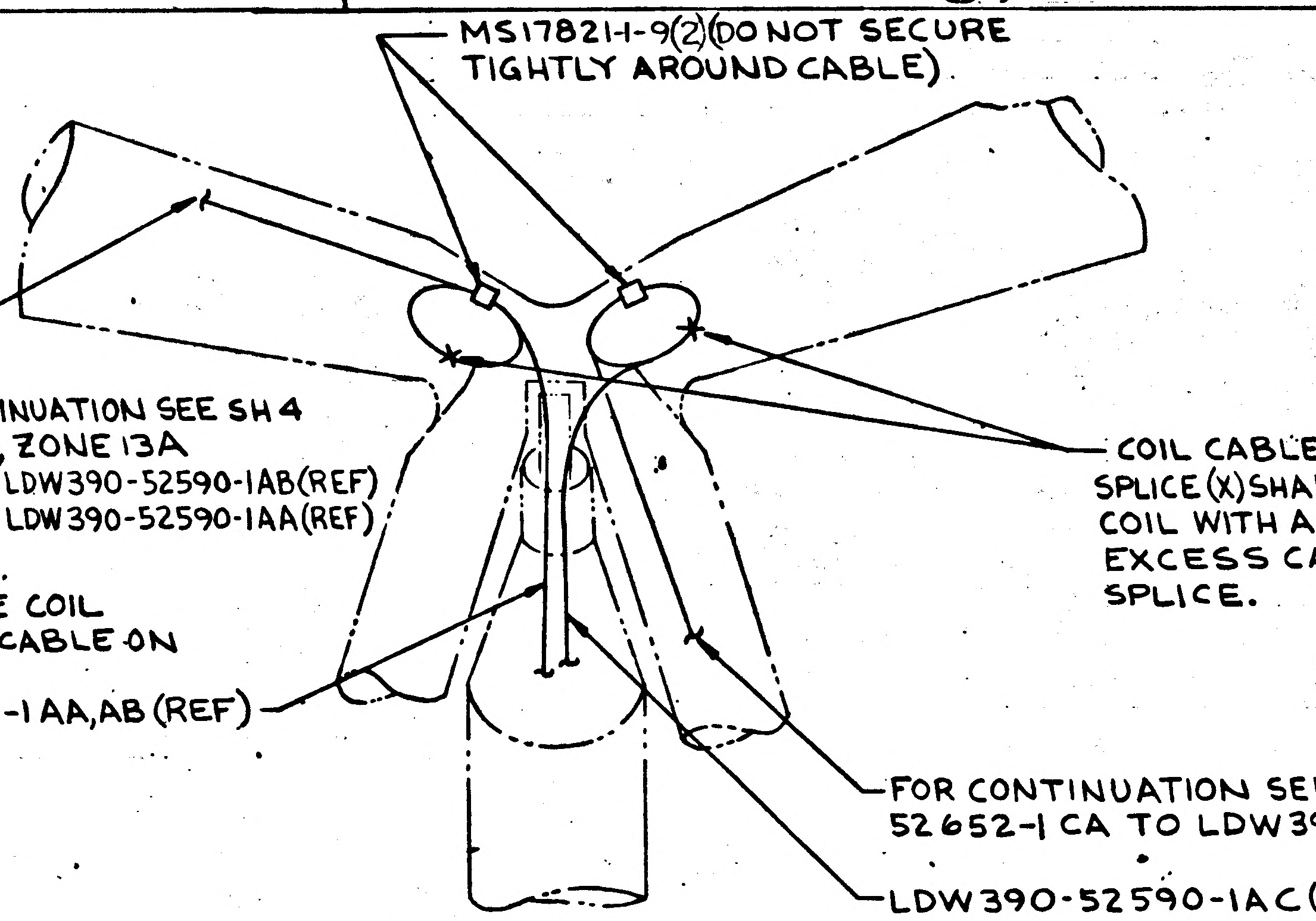

MS17821-1-9(2)(DO NOT SECURE TIGHTLY AROUND CABLE).
FOR CONTINUATION SEE SH4 VIEW U-U, ZONE 13A
52857-1AT TO LDW390-52590-1AB(REF)
52857-1BC TO LDW390-52590-1AA(REF)
LDW390-52590-1AA, AB (REF)
COIL CABLE TO ALLOW FOR RESPLICING. SPLICE(X) SHALL BE IN THE MIDDLE OF THE COIL WITH A MINIMUM OF 9 INCHES OF EXCESS CABLE ON EACH SIDE OF THE SPLICE.
FOR CONTINUATION SEE SH 4, VIEW U-U, ZONE 13A
52652-1CA TO LDW390-52590-1AC (REF)
LDW390-52590-1AC (REF)

SECTION AZ-AZ ZONE 57D
(-5 INSTL)

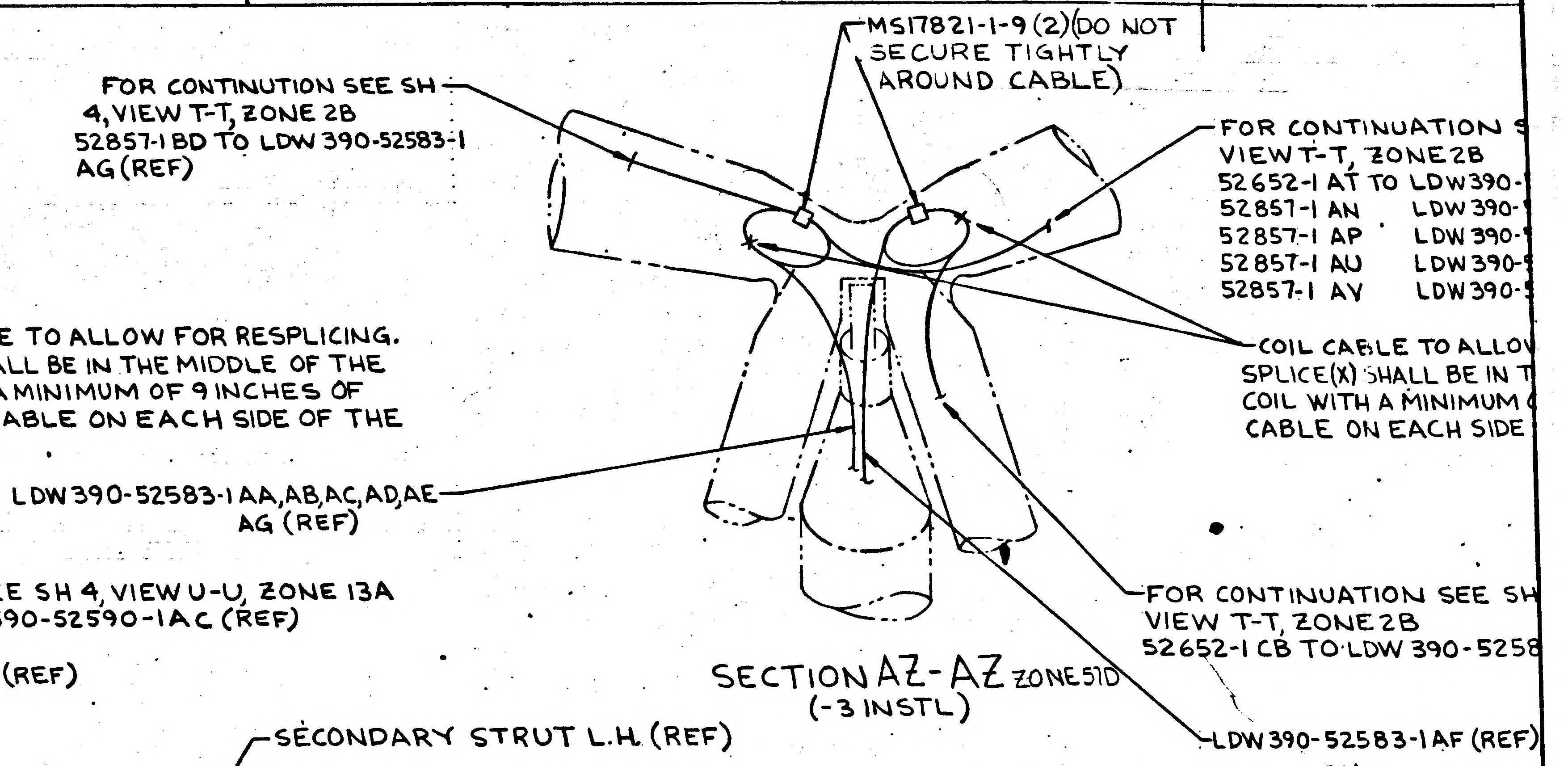

FOR CONTINUTION SEE SH 4, VIEW T-T, ZONE 2B
52857-1BD TO LDW390-52583-1AG (REF)
MS17821-1-9 (2)(DO NOT SECURE TIGHTLY AROUND CABLE)
FOR CONTINUATION S
VIEW T-T, ZONE 2B
52652-1AT TO LDW390-
52857-1AN LDW390-
52857-1AP LDW390-
52857-1AU LDW390-
52857-1AV LDW390-
COIL CABLE TO ALLOW
SPLICE(X) SHALL BE IN T
COIL WITH A MINIMUM
CABLE ON EACH SIDE
LDW390-52583-1AA, AB, AC, AD, AE AG (REF)
FOR CONTINUATION SEE SH
VIEW T-T, ZONE 2B
52652-1CB TO LDW390-5258
LDW390-52583-1AF (REF)

SECTION AZ-AZ ZONE 51D
(-3 INSTL)

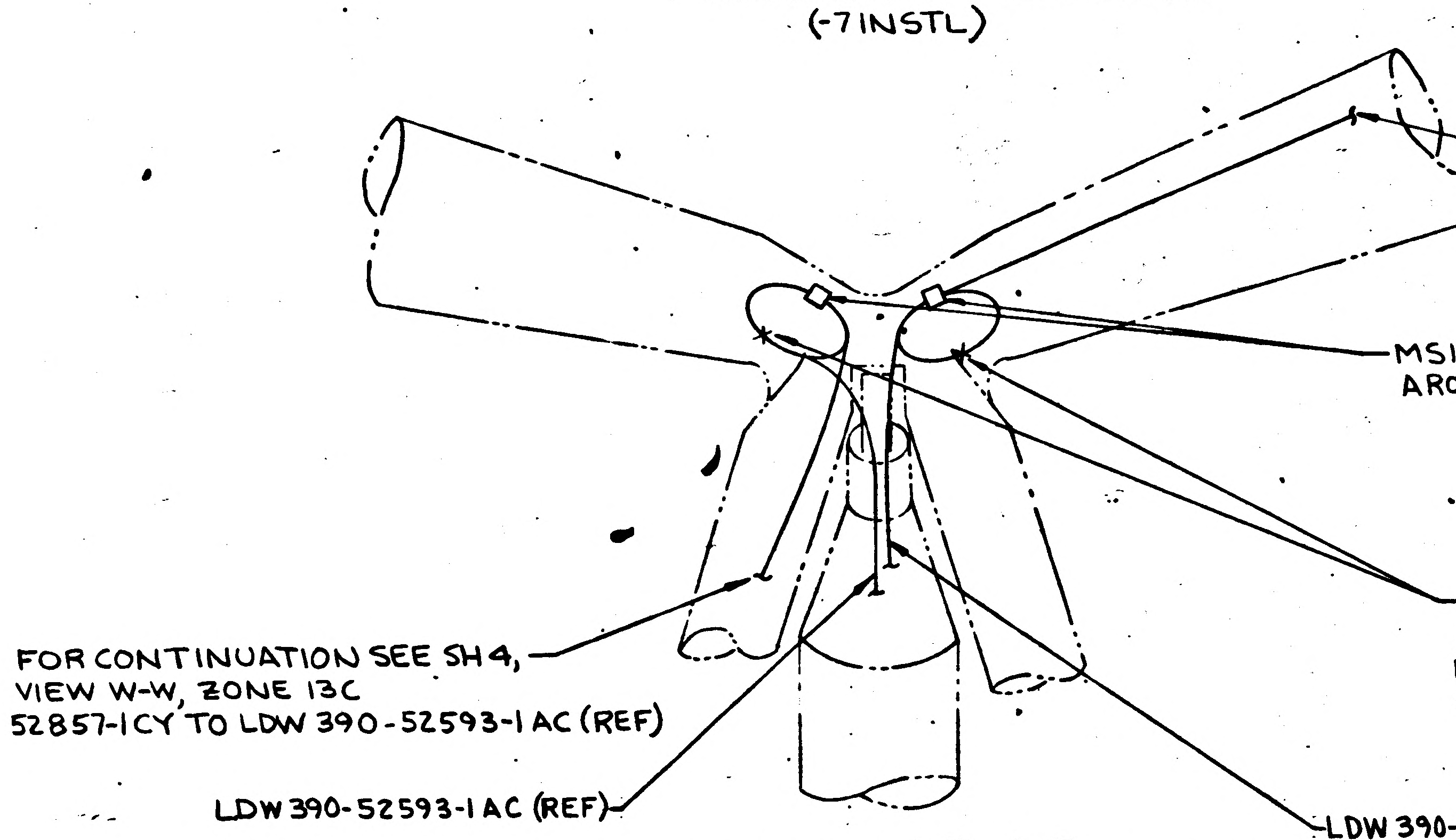

FOR CONTINUATION SEE SH4, VIEW W-W, ZONE 13C
52857-1AR TO LDW390-52593-1AB (REF)
52857-1AW TO LDW390-52593-1AA (REF)
MS17821-1-9(2)(DO NOT SECURE TIGHTLY AROUND CABLE)
COIL CABLE TO ALLOW FOR RESPLICING. SPLICE(X) SHALL BE IN THE MIDDLE OF THE COIL WITH A MINIMUM OF 9 INCHES OF EXCESS CABLE ON EACH SIDE OF THE SPLICE
FOR CONTINUATION SEE SH4, VIEW W-W, ZONE 13C
52857-1CY TO LDW390-52593-1AC (REF)
LDW390-52593-1AC (REF)
LDW390-52593-1AA, AB(REF)

SECTION AZ-AZ ZONE 57D
(-9 INSTL)

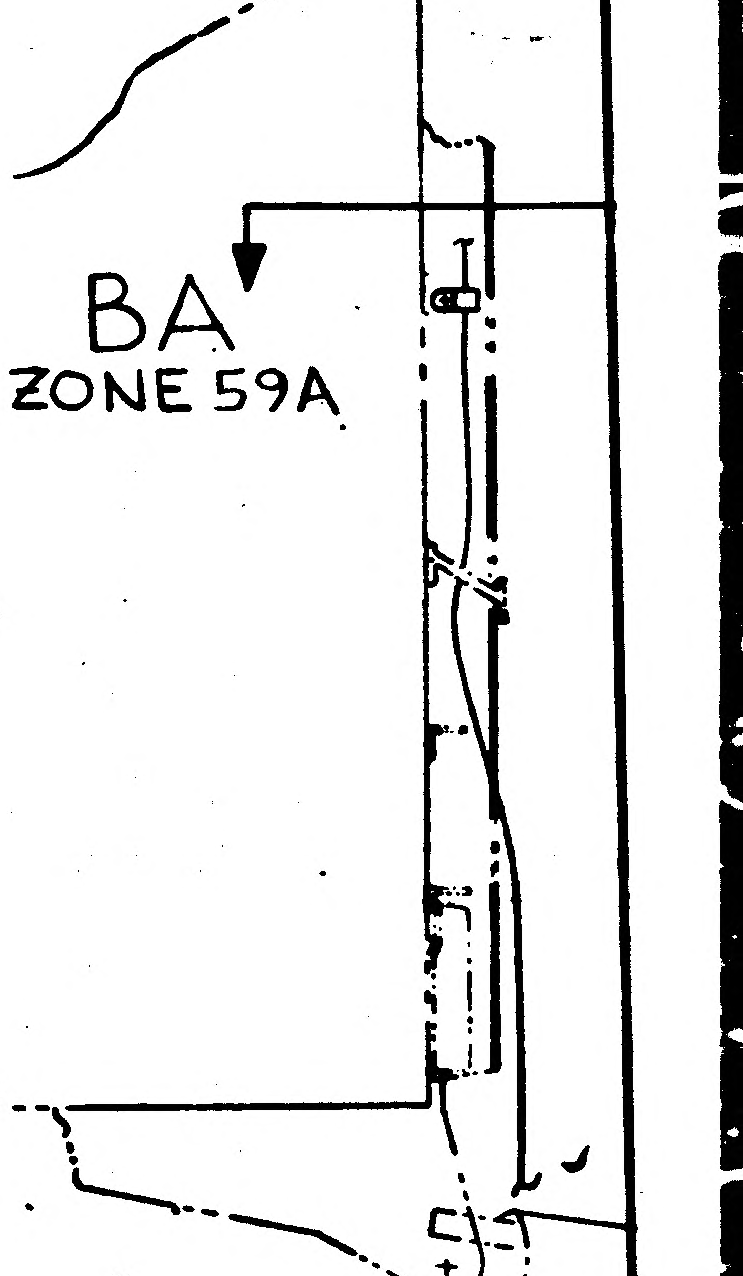

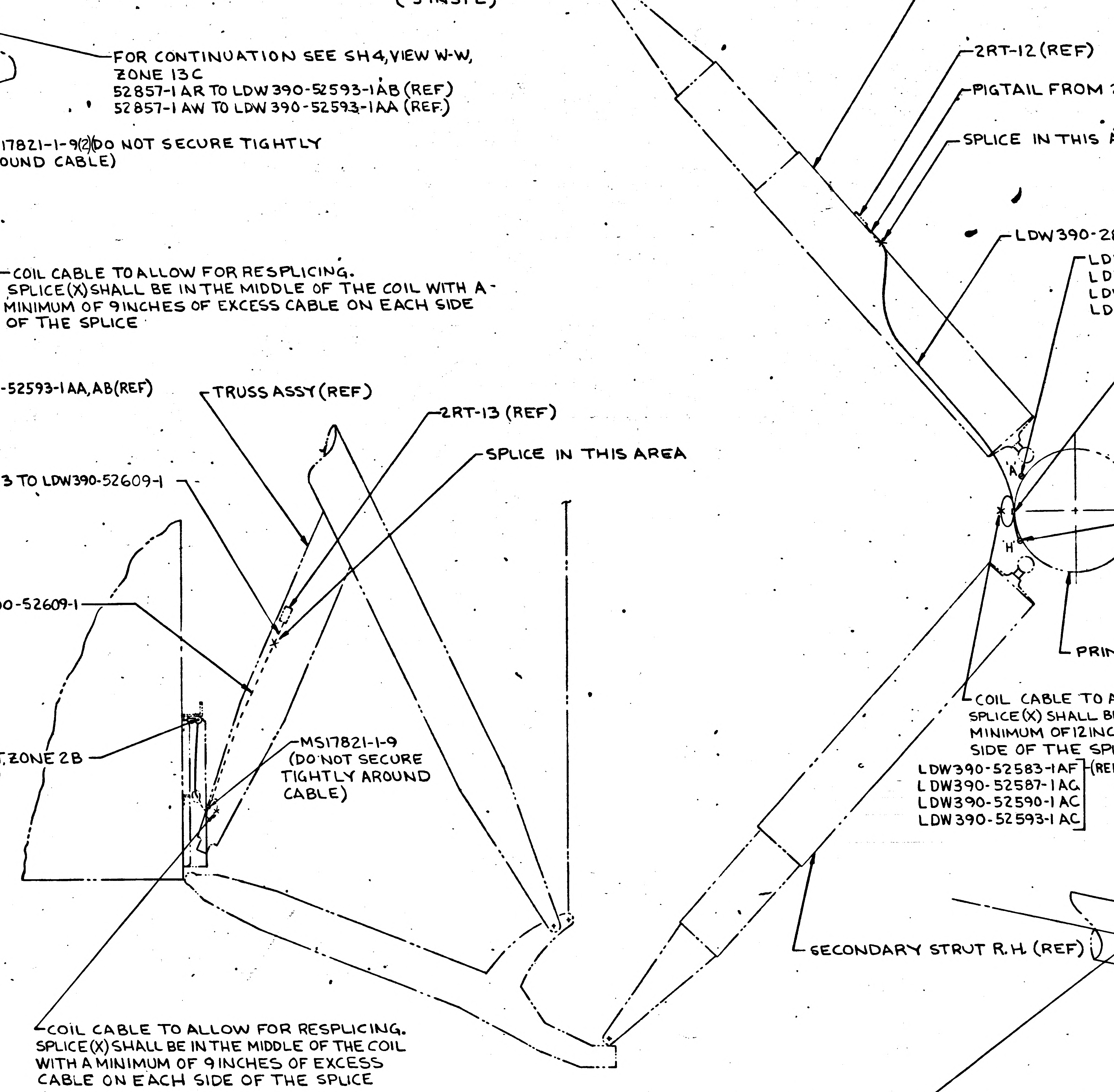

SECONDARY STRUT L.H. (REF)
2RT-12 (REF)
PIGTAIL FROM 2RT-12 TO LDW390-28598-1 (REF)
SPLICE IN THIS AREA
LDW390-28598-1AA
LDW390-52583-1AF
LDW390-52587-1AC
LDW390-52590-1AC
LDW390-52593-1AC
(REF)
MS17821-1-9 (DO NOT SECURE TIGHTLY AROUND CABLE)
LDW390-52583-1AB, AC, AD, AE, AG,
LDW390-52587-1AA, AB.
LDW390-52590-1AA, AB
LDW390-52593-1AA, AB
(REF)
A
H
PRIMARY STRUT (REF)
COIL CABLE TO ALLOW FOR RESPLICING. SPLICE(X) SHALL BE IN THE MIDDLE OF THE COIL WITH A MINIMUM OF 12 INCHES OF EXCESS CABLE ON EACH SIDE OF THE SPLICE
TRUSS ASSY (REF)
2RT-13 (REF)
SPLICE IN THIS AREA
PIGTAIL FROM 2RT-13 TO LDW390-52609-1 (REF)
LDW390-52609-1
FOR CONTINUATION SEE SH 4, VIEW T-T, ZONE 2B
52857-1BE TO LDW390-52609-1 (REF)
MS17821-1-9 (DO NOT SECURE TIGHTLY AROUND CABLE)
SECONDARY STRUT R.H. (REF)
COIL CABLE TO ALLOW FOR RESPLICING. SPLICE(X) SHALL BE IN THE MIDDLE OF THE COIL WITH A MINIMUM OF 9 INCHES OF EXCESS CABLE ON EACH SIDE OF THE SPLICE

SECTION BA-BA ZONE 57C

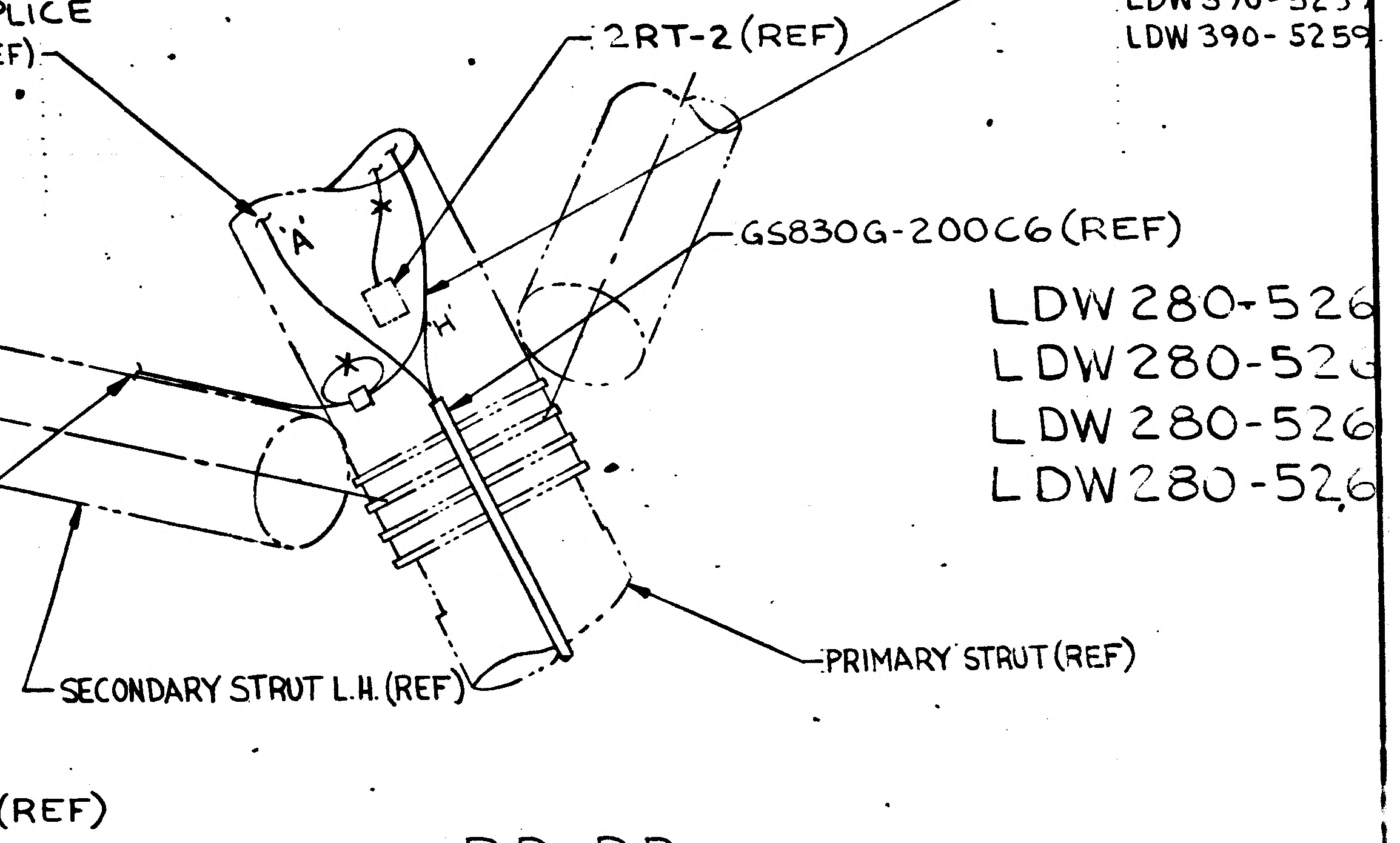

LDW390-52583-1AF
LDW390-52587-1AG
LDW390-52590-1AC
LDW390-52593-1AC
(REF)
2RT-2 (REF)
LDW390-5258
LDW390-5258
LDW390-5259
LDW390-5259
GS830G-200C6 (REF)
A
H
SECONDARY STRUT L.H. (REF)
PRIMARY STRUT (REF)
LDW390-28598-1AA (REF)

VIEW BB-BB ZONE 563

LDW280-526
LDW280-52
LDW280-526
LDW280-526

01/03 NAS 9-1100

CODE IDENT NO. 26512	SHEET
LDW280-52607	8

61 60 59 58

57
56
55
54
S17821-1-9 (2) DO NOT
SECURE TIGHTLY
ROUND CABLE)
FOR CONTINUATION SEE SH 4
VIEW T-T, ZONE 2B
52652-1 AT TO LDW390-52583-1 AC
52857-1 AN LDW390-52583-1 AD
52857-1 AP LDW390-52583-1 AE (REF)
52857-1 AU LDW390-52583-1 AA
52857-1 AV LDW390-52583-1 AB
COIL CABLE TO ALLOW FOR RESPLICING. SPLICE(X) SHALL BE IN THE MIDDLE OF THE COIL WITH A MINIMUM OF 9 INCHES OF EXCESS CABLE ON EACH SIDE OF THE SPLICE.
FOR CONTINUATION SEE SH 4
VIEW T-T, ZONE 2B
52652-1 CB TO LDW 390-52583-1 AF (REF)
Z-AZ ZONE 51D
STL)
LDW390-52583-1AF (REF)
AZ ZONE 58D, 59D, 61D, 61C
AZ
AZ
LDW 390-52583-1 AA, AB, AC, AD, AE, AF, AG (-3 INSTL)
LDW 390-52590-1 AA, AB, AC (-5 INSTL)
LDW 390-52587-1 AA, AB, AC (-7 INSTL)
LDW 390-52593-1 AA, AB, AC (-9 INSTL)
LDW 390-52583-1AA (REF)
SPLICE IN THIS AREA
2RT-1 FOR -3 PRIMARY STRUT ONLY (REF)
GS830G-200C6 (REF)
LDW 390-52591-1 (REF)
LDW 390-52592-1
TIE PIGTAILS FROM 1S15 & 1S16 TO LDW 390-52591-1 & LDW 390-52592-1 WHERE POSSIBLE
PIGTAIL FROM 1S15, 1S16 (REF)
DETAIL AY ZONE 55D
FOR CONTINUATION SEE -3,-5,-7,-9 LANDING PAD ZONE 55A
SEE DETAIL AY ZONE 55C
GS830G-200C6 (REF)
LUNAR PROBE (REF)
98-1 (REF)
BA
ZONE 59A
PRIMARY STRUT (REF)
LDW 390-52591-1 (-5 LUNAR PROBE) (REF)
LDW 390-52592-1 (-9 LUNAR PROBE)
SECURE
ABLE)
GS830G-200C6 (REF)
LDW390-52583-1 AB (REF)
SPLICE IN THIS AREA
PIGTAIL FROM 2RT-2 TO LDW 390-52583-1AB (REF)
BB
2RT-2 FOR -3 PRIMARY STRUT ONLY (REF)
BA
LDW390-52583-1AG TO LDW390-28598-1AA (REF)
390-52583-1AB, AC, AD, AE, AG,
390-52587-1 AA, AB.
390-52590-1 AA, AB
390-52593-1 AA, AB
(REF)
SECONDARY STRUT L.H. SIDE (REF)
2RT-12 (REF)
ZONE 58A BB
LDW 390-52583-1 AC
LDW 390-52593-1 AA
LDW 390-52587-1 AA (REF)
LDW390-52590-1 AA
1S15 (-5 INSTL)
1S16 (-9 INSTL)
1S17 (-3 INSTL) (REF)
1S18 (-7 INSTL)
SPLICE IN THIS AREA
PIGTAIL FROM 2RT-14 TO LDW 390-52592-1
2RT-15 LDW 390-52591-1 (REF)
2RT-14 (-9 LUNAR PROBE)
2RT-15 (-5 LUNAR PROBE) (REF)
DETAIL BD ZONE 55A
COIL WITH A
ON EACH
LDW390-52583-1AC, AD, AE, AG
LDW390-52587-1 AA, AB
LDW390-52590-1 AA, AB (REF)
LDW390-52593-1 AA, AB
2RT-2 (REF)
GS830G-200C6 (REF)
GS830G-200C6 (REF)
PIGTAIL FROM 2RT-3 TO LDW390-52583-1 AC
2RT-4 LDW 390-52593-1 AA
2RT-5 LDW390-52587-1 AA (REF)
2RT-6 LDW390-52590-1 AA
SPLICE IN THIS AREA
2RT-3 (-3 PRIMARY STRUT)
2RT-4 (-9 PRIMARY STRUT) (REF)
2RT-5 (-7 PRIMARY STRUT)
2RT-6 (-5 PRIMARY STRUT)
LDW 280-52607-3 INSTL (+Z)
LDW 280-52607-5 INSTL (+Y)
LDW 280-52607-7 INSTL (-Z)
LDW 280-52607-9 INSTL (-Y)
COIL CABLE TO ALLOW FOR RESPLICING & MOVEMENT. SPLICE (X) SHALL BE IN THE MIDDLE OF THE COIL WITH A MINIMUM OF 12 INCHES OF EXCESS CABLE ON EACH SIDE OF THE SPLICE.
LDW 390-52591-1 (REF)
LDW 390-52592-1
PIGTAIL FROM 1S15, 1S16, 1S17 & 1S18
LDW 390-52583-1AD TO LDW390-28631-1AB
LDW 390-52583-1AE TO LDW 390-28631-1AA
LDW 390-52583-1AF TO PIGTAIL FROM 1S17
LDW 390-52590-1AB TO LDW 390-52591-1
LDW 390-52590-1 AC TO PIGTAIL FROM 1S15 (REF)
LDW 390-52593-1 AB TO LDW390-52592-1
LDW 390-52593-1 AC TO PIGTAIL FROM 1S16
LDW 390-52587-1 AB TO LDW 390-28632-1
LDW 390-52587-1 AC TO PIGTAIL FROM 1S18
PRIMARY STRUT (REF)
LDW 390-28631-1AA
SPLICE IN THIS AREA
PIGTAIL FROM 2RT-7 TO LDW390-28631-1AA (REF)
2RT-7 (-3 INSTL ONLY) (REF)
2RT-8 (-3 INSTL) (REF)
2RT-10 (-7 INSTL)
LANDING PAD (REF)
MS17821-1-9 (DO NOT SECURE TIGHTLY AROUND CABLE ALLOWING FOR MOVEMENT)
LDW390-28631-1AB (-3 INSTL)
LDW390-28632-1 (-7 INSTL)
E3-33 ZONE 56B
PIGTAIL FROM 2RT-8 TO LDW390-28631-1AB (REF)
2RT-10 LDW 390-28632-1
FOR CONTINUATION SEE DETAIL BD ZONE 55B
SPLICE IN THIS AREA
57
56
55
54

02/03 NAS 9-1100

CODE IDENT NO. 26512
LDW280-52607 SHEET 8

CODE IDENT NO. 26512
LDW280-52607 SHEET 8

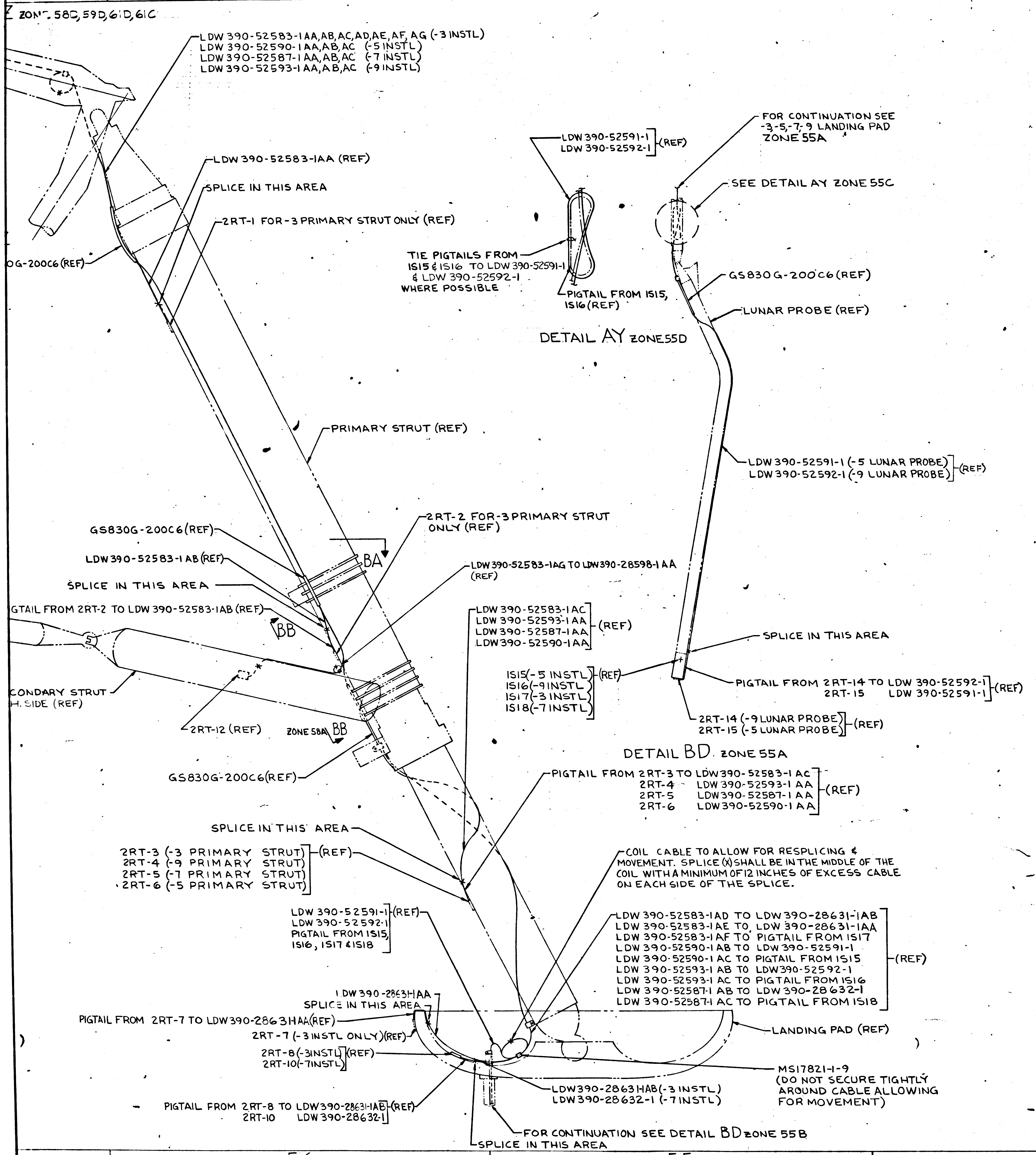
56
55
54
53
ZONE 58D, 59D, 61D, 61C
LDW 390-52583-1AA, AB, AC, AD, AE, AF, AG (-3 INSTL)
LDW 390-52590-1AA, AB, AC (-5 INSTL)
LDW 390-52587-1AA, AB, AC (-7 INSTL)
LDW 390-52593-1AA, AB, AC (-9 INSTL)
LDW 390-52583-1AA (REF)
SPLICE IN THIS AREA
2RT-1 FOR-3 PRIMARY STRUT ONLY (REF)
0G-200C6 (REF)
LDW 390-52591-1
LDW 390-52592-1 (REF)
TIE PIGTAILS FROM 1S15 & 1S16 TO LDW 390-52591-1 & LDW 390-52592-1 WHERE POSSIBLE
PIGTAIL FROM 1S15, 1S16 (REF)
DETAIL AY ZONE 55D
FOR CONTINUATION SEE -3, -5, -7, -9 LANDING PAD ZONE 55A
SEE DETAIL AY ZONE 55C
GS830G-200C6 (REF)
LUNAR PROBE (REF)
PRIMARY STRUT (REF)
LDW 390-52591-1 (-5 LUNAR PROBE)
LDW 390-52592-1 (-9 LUNAR PROBE) (REF)
2RT-2 FOR-3 PRIMARY STRUT ONLY (REF)
GS830G-200C6 (REF)
LDW390-52583-1AB (REF)
BA
SPLICE IN THIS AREA
LDW390-52583-1AG TO LDW390-28598-1AA (REF)
PIGTAIL FROM 2RT-2 TO LDW 390-52583-1AB (REF)
BB
LDW 390-52583-1AC
LDW 390-52593-1AA
LDW 390-52587-1AA
LDW 390-52590-1AA (REF)
SPLICE IN THIS AREA
1S15 (-5 INSTL)
1S16 (-9 INSTL)
1S17 (-3 INSTL)
1S18 (-7 INSTL) (REF)
PIGTAIL FROM 2RT-14 TO LDW 390-52592-1
2RT-15 LDW 390-52591-1 (REF)
SECONDARY STRUT
H. SIDE (REF)
2RT-12 (REF)
ZONE 58A BB
2RT-14 (-9 LUNAR PROBE)
2RT-15 (-5 LUNAR PROBE) (REF)
DETAIL BD ZONE 55A
GS830G-200C6 (REF)
PIGTAIL FROM 2RT-3 TO LDW390-52583-1 AC
2RT-4 LDW 390-52593-1 AA
2RT-5 LDW390-52587-1 AA
2RT-6 LDW390-52590-1 AA (REF)
SPLICE IN THIS AREA
2RT-3 (-3 PRIMARY STRUT)
2RT-4 (-9 PRIMARY STRUT)
2RT-5 (-7 PRIMARY STRUT)
2RT-6 (-5 PRIMARY STRUT) (REF)
COIL CABLE TO ALLOW FOR RESPLICING & MOVEMENT. SPLICE (X) SHALL BE IN THE MIDDLE OF THE COIL WITH A MINIMUM OF 12 INCHES OF EXCESS CABLE ON EACH SIDE OF THE SPLICE.
LDW 390-52591-1
LDW 390-52592-1
PIGTAIL FROM 1S15, 1S16, 1S17 & 1S18 (REF)
LDW 390-52583-1AD TO LDW 390-28631-1AB
LDW 390-52583-1AE TO LDW 390-28631-1AA
LDW 390-52583-1AF TO PIGTAIL FROM 1S17
LDW 390-52590-1AB TO LDW 390-52591-1
LDW 390-52590-1 AC TO PIGTAIL FROM 1S15
LDW 390-52593-1 AB TO LDW390-52592-1
LDW 390-52593-1 AC TO PIGTAIL FROM 1S16
LDW 390-52587-1 AB TO LDW390-28632-1
LDW 390-52587-1 AC TO PIGTAIL FROM 1S18 (REF)
LDW 390-2863HAA
SPLICE IN THIS AREA
PIGTAIL FROM 2RT-7 TO LDW390-2863HAA (REF)
2RT-7 (-3 INSTL ONLY) (REF)
2RT-8 (-3 INSTL)
2RT-10 (-7 INSTL) (REF)
LANDING PAD (REF)
MS17821-1-9 (DO NOT SECURE TIGHTLY AROUND CABLE ALLOWING FOR MOVEMENT)
LDW390-2863HAB (-3 INSTL)
LDW390-28632-1 (-7 INSTL)
PIGTAIL FROM 2RT-8 TO LDW 390-2863HAB
2RT-10 LDW 390-28632-1 (REF)
FOR CONTINUATION SEE DETAIL BD ZONE 55B
SPLICE IN THIS AREA

MANUFACTURING OPERATIONS
UNLESS OTHERWISE SPECIFIED
NOTES CHECKED √ APPLY TO THIS DWG.

PART NUMBER AND ALL OTHER MARKINGS IN REGION MARKED ⊠ USE BOTH SIDES IF NECESSARY.	
FILLET AND INSIDE CORNER RADII TOLERANCES .016R TO .062R ± .010 .063R TO .250R ± .015 OVER .250R ± .030	
DEPTH SHOWN FOR TAPPED HOLES IS FULL THDS. 2-3 IMP THDS. BEYOND PERMISSIBLE.	
EXTERNAL THREAD LENGTH SHOWN INCLUDES 2 IMPERFECT THREADS MAX.	
DO NOT CADMIUM PLATE & PAINT HOLES OR SURFACES MARKED WITH DOUBLE ASTERISK.	
MISMATCH STEP OF ± .005 PERMISSIBLE DUE TO CHANGE OF CUTTERS AT INSIDE INTERSECTING SURFACES.	
DIAMETERS MARKED MUST BE CONCENTRIC WITHIN FULL INDICATOR READING	
HOLES MUST BE KEPT FREE OF CHROME PLATING SOLUTION.	
ALL DIMENSIONS SHOWN TO BE MET AFTER CADMIUM PLATING. THICKNESS OF PLATE .0003 MIN. TO .0005 MAX. MIN. THICKNESS TO BE .0002 ON THREADED AREAS. NO ALLOWANCE FOR PLATING IN HOLES	
125 √ SURFACE ROUGHNESS INCLUDING REAMED HOLES PER MIL-STD-10	
200 √ FOR ALL DRILLED HOLES	
REMOVE ALL BURRS. BREAK ALL EDGES .015-.031	
INSPECTION INFORMATION MINIMUM PERMISSIBLE AVERAGE EDGE DISTANCE MARKED IS	
SYMBOL √ DENOTES SURFACE TO BE MACHINED	
UNLESS OTHERWISE SPECIFIED TOLERANCE ON FLANGES IS ± 1/32	
LENGTHS OF AN, NAS & MS AL ALY RIVETS SHORTER THAN 1 INCH ARE NOT SPECIFIED.	
TOLERANCE ON LOFTED DELINEATIONS IS	

DWG SIZE 34 X 99

PRINTING INFO ONLY
FULL SIZE SHEET AREA (36 X 109) = 27.0 SQ. FT.
1/2 SIZE SHEET AREA (1/4 OF FULL) = 7.0 S. FT.

PRINT TRIM LINE

D
C
B
A

LDW280-52607AB

LDW280 52607A

03/03

NAS 9-1100

CODE IDENT NO. 26512
LDW280-52607 SHEET 8

GRUMMAN AIRCRAFT ENGRG CORP., BETHPAGE, L. I., NEW YORK

MODEL OR END ITEM	SIZE	CODE IDENT NO.		
LM	J	26512	LDW280-52607	A
	SCALE 1/4		SHEET 8.00	

REVISIONS

FOR CONTINUATION OF REVISIONS SEE SHEET 1.15

CHANGE LTR	ITEM NO.	SHEET NO.	ZONE	GRUMMAN INFO ONLY	DET SPEC	CLASS I	CLASS II	ENGRG ORDER	DESCRIPTION	EFFECTIVITY	DISPOSITION OF EXISTING PARTS		CHANGED BY AND DATE	ENGRG APPD	GOVT APPD
											REWORK	SCRAP			
	30	2.00					✓		ADDED: GS550C-08S8(3), AN960D8L(3), GT535U-8(A/R) FOR -3,-5,-7,-9 ASSY DELETED: GB11J-3-2(4) MS35206-245(3) AN960D10L(8) MS21042L3(4) LDW280M16125(4)	LM-2(32)	✓		J. H. FARRELL 3/20/67	JS JW	CHUCK IFF 4-14-67
A	31	1.00							ADDED SH 1.10,1.11, 1.12, 1.13, 1.14, 2.01, 8.00 REVISED SH 1 OF 15 WAS SH 1 OF 7. REVISED LAST DASH NO. USED -9 WAS -1 REVISED LAST SECT. LTR. USED BC WAS AV.						
B	1	4.00	7B 7C 8B					B 1	REVISED GA2681D(1) (REF) WAS GA2681D(REF), GA2683D(3) (REF) WAS GA2683D(REF), GA2682D(2) (REF) WAS GA2682D(REF).	LM-2(32)	✓		J. H. FARRELL 6/16/67	JS	
			8B						ADDED (1), (2) & (3) TO PICTURE OF VIBRATION AMPLIFIERS.						
	2	7.00	50C					B 2	ADDED CLAMPS AND REROUTED 21772-1AD(REF).						
	3	5.00	20A					B 3	ROTATED CLAMP AND REROUTED CABLES 51717(REF) THRU 51720(REF), 51726(REF) THRU 51729(REF).						
		7.00	49B						REMOVED CLAMP AND REROUTED 51717(REF) THRU 51720(REF).						
	4	4.00	6C 5C					B 4	REROUTED 51993-1(REF) AND REVISED 51605-1(REF), 51995-1(REF) WAS 51605-1(REF), 51993-1(REF), 51995-1(REF).						
		5.00	20A						REROUTED 51720-1(REF).						
	5	4.00	8D					B 5 LCD 1077	RELOCATED CLAMPS AND REROUTED 21647-1 AA,AC (REF) AND 21647-1 AB(REF).						
		6.00	29A 29B						RELOCATED P1375 (20A108) AND P1374 (20A109) (REF).						
			28B 29B						ADDED CLAMP AND REROUTED 52857-1 CR(REF).						
			29B						ADDED CLAMP, SECT. CUT FOR EXISTING SECT. AL-AL. AND NAS43DD3-16.						
			28A						REROUTED 52857-1 AF (REF).						
			27B 27C						REROUTED 510774-001 (REF) AND ADDED NAS43DD3-16(3).						
			31C						REMOVED CLAMPS (2) AND REROUTED CABLES THRU EXISTING ADJACENT CLAMPS.						

CHG APPROVED

LTR	GROUP LDR	VEH DES INT	STRUCTURES	STRUCTURES	WEIGHTS						
A	J.WOLF JS	J.WOLF	WJH F.B. 4/10/67								
B	JS	7/6	Seep. 1.16								

GRUMMAN AIRCRAFT ENGRG CORP., BETHPAGE, L. I., NEW YORK

SIZE	CODE IDENT NO.		
B	26512	LDW280-52607	B

SCALE NONE

SHEET 1.14

(B)

ENG 77.16 3-66

01

NAS 9-1100

REVISIONS FOR CONTINUATION OF REVISIONS SEE SHEET 1.16

CHANGE LTR	ITEM NO.	SHEET NO.	ZONE	GRUMMAN INFO ONLY	DET SPEC	CLASS I	CLASS II	ENGRG ORDER	DESCRIPTION	EFFECTIVITY	DISPOSITION OF EXISTING PARTS REWORK	DISPOSITION OF EXISTING PARTS SCRAP	CHANGED BY AND DATE	ENGRG APPD	GOVT APPD
B		6.00	31B					B5 LCD 1077	ADDED CLAMP AND REROUTED 52652-1 BV,BW,BX(REF), 52857-1 CU,CV(REF), 52972-1 AC (REF).	LM-2(32)	✓		J. H. FARRELL 6/21/67		
		5.00	20A						RELOCATED CLAMP & REROUTED PIGTAILS FROM 10MT52 & 10MT7 (REF).						
		7.00	47B						ADDED GT11J-BR08-10 TERM INSTL.						
	6	6.00	29B					B6	REVISED EO B5 ADDING NAS43DD3-16.						
		4.00	7A						ROTATED CLAMP AND REROUTED 51612-1(REF), 51716-1(REF), 52531-1(REF)						
	7	4.00	7D					B7 LCD 1077	REMOVED OLD PICTURE OF PIPES AND ADDED NEW PICTURE OF PIPES. ADDED CLAMPS AND REROUTED 28654-1 CA,CB,CS,CT (REF). ADDED GT11J-BR08-10 TERMINAL INSTL.						
	8	4.00	9D 10D					B8	ADDED ROUTING FOR LSC370-250-5 (REF) & ADDED SECT. BD-BD.						
		4.00 6.00	10D 33A 33B				✓		REROUTED 21647-1 AF(REF) AND 28654-1 CY,CZ (REF) ADDED CLAMPS AND ROUTING FOR LSC370-400(REF).						
		6.00	32B						ADDED CLAMP AND REROUTED 28654-1 AA(REF).						
	9	2.00						LCD 1077	REVISED B/M IN ACCORDANCE WITH EO B5,B6, & B7. ON -1 INSTL. ADDED NAS43DD3-32(3), NAS43DD3-16(5), GT11J-BR08-10(2). GC500S-2(2), GC500S-4W(2), GB511J-08-2(2), AN960D8L(4), MS21042L08(2).						
	10	6.00	29B 30A					LCD1078	ADDED SECTION BL-BL.						
	11	6.00	32B						ADDED HDW.						
	12	5.00	19A						REF EO B4 REROUTED 51720-1 (REF), 52652-1CB (REF).						
	13	7.00	47C						ADDED: LSC380-00602-07 (SEE NOTE 15) MS20995NC32(SEE NOTE 16).						
	14	7.00	47B						ADDED: GT11J-BR08-12(2) TERM. INSTL.						

CHG APPROVED

LTR	GROUP LDR	VEH DES INT	STRUCTURES	STRUCTURES	WEIGHTS
B	Jwby	Jap 7/6	Seep 1.16		

GRUMMAN AIRCRAFT ENGRG CORP., BETHPAGE, L. I., NEW YORK

SIZE	CODE IDENT NO.		
B	26512	LDW280-52607	B

SCALE NONE SHEET 1.15

ENG 77.10 3-66

01 NAS 9-1100

REVISIONS FOR CONTINUATION OF REVISIONS SEE SHEET ______

CHANGE LTR	ITEM NO.	SHEET NO.	ZONE	GRUMMAN INFO ONLY	DET SPEC	CLASS I	CLASS II	ENGRG ORDER	DESCRIPTION	EFFECTIVITY	DISPOSITION OF EXISTING PARTS REWORK	DISPOSITION OF EXISTING PARTS SCRAP	CHANGED BY AND DATE	ENGRG APPD	GOVT APPD
B	15	7.00	42A				✓	LCD1078	ADDED: CABLES 510787-001(REF), 510787-002(REF), LSC360-603-209(REF), LSC360-603-301(REF), AND IDENTITIES 20 TC 125 TO 20 TC 133(REF), 20A111 THRU 20A120(REF). ADDED SECT. BJ-BJ & DETAIL BH.	LM-2(32)	✓				
	16	NOTED							ADDED: HDW IN 39C,42B,19B,4B.						
	17	5.00	19B						ADDED: LSC360-603-209 FROM 20TC131 TO 20A118 (REF).						
	18	5.00	19B 19D						ADDED: SECT. BK-BK.						
	19	7.00	48A 51C						ADDED: (SEE NOTE 15) MS2099NC32 (SEE NOTE 16).						
	20	4.00 6.00	5C 24B 24C						ADDED: LSC360-630-209(REF) WITH ASSOC IDENTITIES.						
	21	6.00	25B						ADDED: STRUCTURAL BOND (SEE NOTE 5).						
	22	4.00 6.00	6C 26B 26C						ADDED: 510774-002(REF) WITH ASSOC. IDENTITIES.						
	23	6.00	28B						ADDED: LSC360-603-209(REF) WITH ASSOC. IDENTITY						
	24	3.00 3.01							ADDED: NOTES 15,16,17, DELETED NOTE 7, REVISED NOTE 5.						
	25	2.00 2.01							REVISED B/M IN ACCORDANCE WITH B11, B13, B14, B16. ON-1 INSTL. ADDED: GC500S-2(1), GC500S-4W(1), GB11J-08-2(1), AN960D8L(2), LSC380-00602-07(1), MS21042L08(1), GT11J-BR08-12(2), MS20995NC32(A/R), NAS43DD3-32(6), LDW280M11243-13(1), AN503-6-4(1), AN960D6L(2), MS21042L06(1).						
	26	1.00							ADDED: SH 1.15, 1.16. REVISED SH 1 OF 17 WAS SH 1 OF 15. REVISED LAST SECT LTR BL WAS BC.						

CHG APPROVED

LTR	GROUP LDR	VEH DES INT	STRUCTURES	STRUCTURES	WEIGHTS
B		7/6	7/13/67		

GRUMMAN AIRCRAFT ENGRG CORP., BETHPAGE, L. I., NEW YORK

SIZE	CODE IDENT NO.		
B	26512	LDW280-52607	B

SCALE NONE

SHEET 1.16

ENG 77.16 3-66

01

NAS 9-1100

REVISIONS

CHANGE LTR	ITEM NO.	SHEET NO.	ZONE	GRUMMAN INFO ONLY PRIOR TO EVENT	DET SPEC	CLASS I	CLASS II	ENGRG ORDER	DESCRIPTION	EFFECTIVITY	DISPOSITION OF EXISTING PARTS REWORK	DISPOSITION OF EXISTING PARTS SCRAP	CHANGED BY AND DATE	ENGRG APPD	GOVT APPD
C	1	4.00	2B 13D	I			✓	EO C1 LCD 1078	ADDED CLAMPS (8) PER LPC 280-23 TO SECTS T-T, U-U, V-V & W-W	LM2	✓		K. NELSON 11-22-67		
	2	4.00 2.00	6C 8C					EO C2 LCD 1244	ON-1 REROUTED 51993-1(REF) 51995-1(REF) CABLES. RELOCATED CLAMPS (5). ADDED GT11J-BR08-10 TERM INSTL.						
	3	4.00 6.00	4A 31A					EOC3 LCD 1594	ON-1 INSTL ADDED 28654-1DL, IN VIEW D-D ADDED CABLE ASSY 28654-1DL (REF, P1592 (REF)						
	4	6.00	31A					EOC4 LCD 1594	REF EO C3 ON-1 INSTL REROUTED 28654-1DL & RELOCATED CLAMP.						
	5	7.00	50B					EO C5/LCD 1078	ON-1 INSTL ADDED SECT BM-BM						
	6	6.00 2.00	28B			✓		EOC6 LCD 1299	ON-1 INSTL ADDED 10MT83(REF) AMBIENT He TANK(REF), STRUCTURAL BOND(SEE NOTE 5) 52639(REF) SPLICE 10MT83 TO 52639 IN THIS AREA, J566(REF), GB511J-04-2(4), AN960D4L(8), MS21042L04(4)						
	7	3.01					✓	EOC7/LCD 1863	ADDED NOTE #18		NOT	REQD			
	8	7.00	38B					EOC8	ON-1 F/D ADDED EXISTING FLUID LINE (REF)		✓				
	9	7.00 2.00 2.01 3.00 3.01	50B					EOC9 LCD 1819	ON-1 INSTL IN F/D REMOVED AN4-4A(1), AN960DD416(10), MS21042L4(5), GN511L-0420(12) (SEE NOTE 9), MS21043-4(12)(SEE NOTE 8). IN B/M DELETED AN960D416L(10), MS21042L4(5), AN4-4A(1), AN4-5A(4), NOTES 8, 9 & 14						
	10	4.00 7.00 2.00	6B 44A 49C	E		✓		EOC10 LCD 1767	ON-1 INSTL ADDED 52703(REF), NAS43DD3-48(8), J567(REF), LSC390-8-8 (REF), SECT BN-BN, NAS43 DD3-64						

CHG APPROVED

LTR	GROUP LDR	VDI			STRUCTURES	STRUCTURES			
D									

FOR CONTINUATION OF REVISIONS SEE SHEET ______

ENG 77.3 5-65

GRUMMAN AIRCRAFT ENGRG CORP, BETHPAGE, L. I., NEW YORK

SIZE	CODE IDENT NO.		
B	26512	LDW 280-52607	D
SCALE NONE			SHEET 1.17

01

NAS 9-1100

REVISIONS

CHANGE LTR	ITEM NO.	SHEET NO.	ZONE	GRUMMAN INFO ONLY PRIOR TO EVENT	DET SPEC	CLASS I	CLASS II	ENGRG ORDER	DESCRIPTION	EFFECTIVITY	DISPOSITION OF EXISTING PARTS		CHANGED BY AND DATE	ENGRG APPD	GOVT APPD
											REWORK	SCRAP			
D	1	7.00	49C 50C				✓	EO D1	ON-1 REROUTED 28065 & 28605 & ADDED CLAMPS(2) PER LPC 280-23	LM2	✓		K. NELSON 11-22-67		
	2	4.00 5.00 6.00 7.00	SEE DESCRIPTION	P		✓		EOD2 LCD 2223 LCD 1767 LCD 2187 CCA 745	ON-1 INSTL SH4 ZONES 1B, 1C, 11B, 11D, 12D, 12A, 13A DELETED SPLICE 52652-1 BN TO 2S12 THRU 2S19 IN THIS AREA (SEE NOTE 4) ZONES 2B, 13A DELETED SPLICE 28654-1 BA TO 2S18, 28654-1 BG TO 2S16 IN THIS AREA (SEE NOTE 4) ZONES 2C, 11C, 13B, 13D DELETED CONTINUATION CALLOUT. ZONES 2B, 2C, 11B, 11D, 12A, 12D, 13A, 13D DELETED 2S12 THRU 2S19. IN VIEW V-V DELETED 52857-1CX (REF), 52652-1BN(REF). IN VIEW U-U DELETED 52652-1CA TO 1S15(REF), 52652-1CA(REF). IN VIEW V-V ADDED CAP & STOW 52857AS, AX(REF). IN VIEW W-W ADDED CAP & STOW, 52857AR, AW, CY(REF). IN VIEW U-U ADDED CAP & STOW 52857AT, BC(REF), 28654 BA (REF). IN VIEW T-T ADDED CAP & STOW 52652 AT, CB(REF), 52857 AN, AP, AU, AV, BD, BE (REF), 28654 BG(REF). IN VIEW OF UPPER DECK ADDED 52857DA. ZONE 17A DELETED 52652-1CA(REF). ZONE 22B DELETED 52857-1CX(REF), 52652-1 BN (REF). ZONE 19B DELETED HDW. NAS43DD3-32(4). ZONE 31A DELETED 52652-1BN(REF). 52857 CU (REF) WAS 52857-1CU TO 1S18 & 1S16 FROM J1421(REF). ZONE 29B DELETED 52652-1BN(REF). 52857 BV(REF) WAS 52857-1BV FROM J1420 TO 1S15 (+Y) & 1S17(+Z) (REF). ZONE 50A ADDED HDW. ZONE 46A DELETED LEADER, ADDED CAP & STOW 52652 BN(REF), ADDED 52857 DA, DELETED 51776-1AB. SH 5 & 7 DELETED 51717 THRU 51720-1 & 51726 THRU 51729-1.						

CHG APPROVED	LTR	GROUP LDR	VDI			STRUCTURES	STRUCTURES			
	D									

FOR CONTINUATION OF REVISIONS SEE SHEET ______

GRUMMAN AIRCRAFT ENGRG CORP, BETHPAGE, L. I., NEW YORK

SIZE	CODE IDENT NO.		
B	26512	LDW280-52607	D
SCALE	NONE		SHEET 1.18

ENG 77.3 5-65

01

NAS 9-1100

REVISIONS

CHANGE LTR	ITEM NO.	SHEET NO.	ZONE	GRUMMAN INFO ONLY PRIOR TO EVENT	DET SPEC	CLASS I	CLASS II	ENGRG ORDER	DESCRIPTION	EFFECTIVITY	DISPOSITION OF EXISTING PARTS		CHANGED BY AND DATE	ENGRG APPD	GOVT APPD
											REWORK	SCRAP			
D	2	5.00 7.00 7.00 8.00	16D 49A 49B	P		✓		EO D2 (CONT'D)	DELETED SECTIONS BK-BK, AR-AR, Z-Z. DELETED SECTIONS AB-AB, AH-AH SH 4, 5 & 6 DELETED 52652-1BN(REF) & ASSOCIATED HDW. IN B/M SH 2 ADDED GT11J-BR08-10(1), DELETED NAS43DD3-16(8), NAS43DD3-24(12), NAS43DD3-32(7), -3, -5, -7 & 9 INSTL. SH 4, 5, 6, 7 DELETED ALL DASH NOS. FROM THE REF CABLE CALLOUTS. ADDED SECT BP-BP. CANCELLED SH & DELETED -3, -5, -7, -9 INSTL	LM 2	✓		K. NELSON 11-22-67		
	3	2.00/7.00	50B				✓	EO D3	ON -1 ADDED GB511J-06, NAS21042-L06, AN960D-06						
	4	6.00	32B					EO D4	CANCELLED BY EO D7						
	5	6.00	32B					EO D5	CANCELLED BY EO D7						
	6	7.00 2.00	50B 47A 45A 46A	E		✓		EO D6 LCD 2223 CCA 745	ON -1 INSTL REMOVED 52857BZ(REF), MOVED 6GA CABLE FROM TERM 10 TO TERM 9, ADDED 52857DB(REF) DELETED NAS43DD3-24(3). REMOVED C/A 21966(REF) FROM DETAIL M, C/A 21964(REF) FROM DETAIL N, C/A 21956(REF) FROM DETAIL P & C/A 21952(REF) FROM DETAIL Q, ADDED SECTION BR-BR (TYP 3 PLACES)						
	7						✓	EO D7	CANCELS EO D4 & EO D5						
	8	7.00 2.00	50B						REF. EO D3: GB511J-06-2 WAS GB511-06, MS21042L06 WAS NAS21042-L-06, AN960D6L(2) WAS AN960D-06						
	9	6.00 7.00 3.01	31B 31C 32A 50A 45B 40A					LCD 1078	ADDED SECT BU-BU & SECT BS-BS ADDED DETAIL BT & REVISED CABLE ROUTING IN SECT BM-BM ADDED NOTE 19		✓				
		1.00							DELETED SH 8, ADDED SH 1.17, 1.18 & 1.19 LAST SECT LTR USED BU WAS BL SH 1 OF 19 WAS SH 1 OF 17						

CHG APPROVED

LTR	GROUP LDR	VDI			STRUCTURES	STRUCTURES
D					12/15/67	

FOR CONTINUATION OF REVISIONS SEE SHEET

GRUMMAN AIRCRAFT ENGRG CORP, BETHPAGE, L. I., NEW YORK

SIZE B
CODE IDENT NO. 26512
LDW280-52607
D
SCALE NONE
SHEET 1.19

ENG 77.3 5-65

01

NAS 9-1100

QTY PER ASSEMBLY							CODE IDENT	PART NO.	I&T	NOMENCLATURE OR DESCRIPTION	MATERIAL	GOVT SPEC	COML SPEC	STOCK SIZE	PROCESS SYM	FINISH NO.	ZONE
A CL						-1											
						1		AN503-6-4	E	BOLT	STD PART						
						1		LDW280M11243	E	SPACER	SEE DWG						
						1		LSC380-00602-07	E	JACK BHD ADPT	SEE NOTE 17						
					SEE	NOTES		MS21266	E	GROMMET, PLASTIC	STD PART						
						↑		MS21042L	E	NUT, SELF LOCKING	↑						
								MS20995NC32	E	WIRE, LOCK	↓						
								AN960D	E	WASHER	STD PART						
								GT835K	E	TAPE, LACING	GRUMMAN STD						
								GT835C	E	TAPE, INSULATING	↑						
								GC830G	E	SLEEVE							
						↓		GC500S	E	CLAMP	↓						
					SEE	NOTE 5		GB511J	E	BOLT	GRUMMAN STD						

SYM OR NO.	PROCESS OR FINISH	GRUMMAN SPEC OR MILITARY SPEC	SYM OR NO.	PROCESS OR FINISH	GRUMMAN SPEC OR MILITARY SPEC	SYM OR NO.	PROCESS OR FINISH	GRUMMAN SPEC OR MILITARY SPEC

I & T: IDENTIFICATION AND TRACEABILITY IN ACCORDANCE WITH :
NONE

GRUMMAN AIRCRAFT ENGRG CORP, BETHPAGE, L. I., NEW YORK

SIZE	CODE IDENT NO.		
B	26512	LDW280-52607	D
SCALE NONE		SHEET 2.01	D

ENG 77.2 7-65

01

NAS 9-1100

LDW280-52607 E

MODEL OR END ITEM	NEXT ASSY	MODULE OR SER NO.	REQD PER MODULE OR END ITEM
PART NO.		GAEC SCH NO.	

MODEL OR END ITEM	NEXT ASSY	MODULE OR SER NO.	REQD PER MODULE OR END ITEM
PART NO.		GAEC SCH NO.	

MODEL OR END ITEM	NEXT ASSY	MODULE OR SER NO.	REQD PER MODULE OR END ITEM
LM	LDW280-52508	LM 2 (32)	1
PART NO. LDW280-52607-1		GAEC SCH NO. 50-1	

MAY BE REDRAWN ON PRODUCTION FORMAT (5)

SH REV STATUS: FOR DESCRIPTION OF REV SEE SUBQ SH

SHEET	1.00	1.10	1.11	1.12	1.13	1.14	1.15	1.16	
REV	E	A	A	A	A	B	B	B	
SHEET	2.00	2.01	300	3.01	4.00	5.00	6.00	7.00	~~8.00~~
REV	E	D	E	E	E	E	E	E	~~A~~
SHEET	1.17	1.18	1.19	1.20	1.21				
REV	D	D	D	E	E				

LAST SECT LTR USED BV

LAST DASH NO. USED -9

GRUMMAN REL CODE INFO DE

PRIM NO. 227

JK/001

MP-16E 1/24/8

UNLESS OTHERWISE SPECIFIED DIMENSIONS ARE IN INCHES.

TOLERANCE UNLESS SPECIFIED FRACTIONS - DECIMALS - ANGLES

— — —

ORIG DWG AUTH

DETAIL SPEC REQUIREMENT

CLASS II ENGRG CHANGE

CLASS I ENGRG CHANGE

CONTRACT NO. NAS 9-1100

LINE ITEM #1

DOCUMENTATION TYPE II

DRAWN BY P. Eberle 10/29/66

LAYOUT BY P. Eberle 10/29/66

CHECKED BY

GP LEADER 11/15/66

VEH DES INT J. Pusateri 11/15/66

STRUCTURES 11/23/66

STRUCTURES

WEIGHTS

RELIABILITY

PROJ ENGR R.M. Carbee 11-23-66

REL GROUP 11-29-66

GRUMMAN AIRCRAFT ENGRG CORP
BETHPAGE, L. I., NEW YORK

LINES INSTALLATION
ELECTRONIC DESCENT STAGE

SIZE B

CODE IDENT NO. 26512

LDW280-52607 E

SCALE NONE

SHEET 1.00 OF 21

ENG 77.1 12-65

CDC 11-10-66 THIS IS AN ORIGINAL DRAWING

01

NAS 9-1100

REVISIONS

FOR CONTINUATION OF REVISIONS SEE SHEET 1.21

CHANGE LTR	ITEM NO.	SHEET NO.	ZONE	GRUMMAN INFO ONLY PRIOR TO EVENT	DET SPEC	CLASS I	CLASS II	ENGRG ORDER	DESCRIPTION	EFFECTIVITY	DISPOSITION OF EXISTING PARTS: REWORK	DISPOSITION OF EXISTING PARTS: SCRAP	CHANGED BY AND DATE	ENGRG APPD	GOVT APPD
									ADDED SH 1.20 & 1.21, LAST SECT LTR USED "BV" WAS "BU" SH 1 OF 21 WAS SH 1 OF 19.						
E	1	3.01, 7.00	42B				✓	EO E1	ADDED VIEW BV-BV & NOTE 20	LM-2	✓		D. JACOBSON 1-15-68		
	2	5.00, 6.00 7.00	20C 31A 50A 44B 47B	S				EO E2 LCD 1078	REROUTED -21743AB (REF) & -52857CD (REF) & ADDED CLAMP REROUTED -52857C:) & ROTATED CLAMP GTHJ-BR08-10 TERM INSTL WAS GTIIJ-BR08-10 TERM INSTL (FAR SIDE) IN SECT BP-BP, RELOCATED CLAMP. DELETED 52652BN & CLAMPS						
	3	7.00	50B					EO E3	REMOVED DR # 28 (.139-.145) & 7/8 DIM (2) PLACES						
	4	7.00	49B	E				EO E4, LCD 1078	REROUTED CABLE 52652AN (REF)						
	5	7.00	40A					EO E5	IN SECT BM-BM REROUTED CABLES						
	6	7.00, 2.00	45A 46A 47A						IN DETAILS M, N, P & Q DELETED MS21043-4(8) (REF E.O. C9 DWG CORRECTION).	NOT REQD	NOT	REQD			
		5.00	20D 19C 19B 17A 17D 22B						DELETED: CALLOUT 51727 TO P453 (REF) & CABLE 52652BN (REF) DELETED PICTURE OF BKTS, LDW 280-18038 (REF) & GB11D (REF). DELETED SECT. INDICATOR BK-BK (REF E.O. D2 DWG CORR) ADDED GC500AA CLAMPS (REF E.O. D2 DWG CORRECTION) DELETED SECT. INDICATOR Z-Z (2 PLACES) & SPLICE NOTE & CONTINUATION NOTE (REF EO D2 DWG CORRECTION)						
		4.00	10B 13C 3B 11B 11C 13B 2B 2C 13D						DELETED PICTURE OF CABLE 52857AS, AX & CX (REF) & REMOVED "A". DELETED PICTURE OF CABLE 52857AR, AW & CY (REF) & RELOCATED CAP & STOW POINT FOR 52857CY (REF) (REF E.O. D2 DWG CORR) DELETED PICTURE OF CABLES 52652CB, AT (REF); 52857AN, AP, AU, AV & BD (REF) (REF EO D2 DWG CORRECTION) DELETED PICTURE OF CABLES, 52857AT, BC (REF) & 52652CA (REF) RELOCATED CAP & STOW POINT FOR 28654BG (REF) & 52857BE (REF), (REF EOD2 DWG CORR). DELETED PICTURE OF CABLE 52857BE (REF) ADDED CONTINUATION NOTE (REF EOD2 DWG CORRECTION)						

CHG APPROVED

LTR	GROUP LDR	VDI		STRUCT	STRUCT	WTS.				
E	SEE 1.21	—		—	—					

GRUMMAN AIRCRAFT ENGRG CORP., BETHPAGE, L. I., NEW YORK

SIZE	CODE IDENT NO.		
B	26512	LDW 280-52607	E (E)
SCALE NONE			SHEET 1.20

ENG 77.16 3-66

01

NAS 9-1100

REVISIONS

FOR CONTINUATION OF REVISIONS SEE SHEET ______

CHANGE LTR	ITEM NO.	SHEET NO.	ZONE	GRUMMAN INFO ONLY PRIOR TO EVENT	DET SPEC	CLASS I	CLASS II	ENGRG ORDER	DESCRIPTION	EFFECTIVITY	DISPOSITION OF EXISTING PARTS		CHANGED BY AND DATE	ENGRG APPD	APPD
											REWORK	SCRAP			
E	6	6.00	30A 28A 31B 29B 28C 25B 27B				✓		DELETED PICTURE OF CLAMP (17) PLACES (REF E.O. D2 DWG CORR) DELETED PICTURES OF CABLES 52652BN (REF) ADDED: "BOND WIRES ONTO TANK." TO EXISTING CALLOUT (REF E.O. C6 DWG CORRECTION)	NOT REQD	NOT	REQD	D. JACOBSON 1-15-68		1-22-68
	7	3.00		E			✓	LCD1078 Ⓔ	ADDED "MIN" TO NOTE 11.	LM-2	✓				

CHG APPROVED

LTR	GROUP LDR	VDI	STRUCTURE	Structure	Wts
E	Jwolf 1/15/68	1/15/68	1/16/68	1/16	

GRUMMAN AIRCRAFT ENGRG CORP., BETHPAGE, L. I., NEW YORK

SIZE	CODE IDENT NO.		
B	26512	LDW280-52607	E Ⓔ
SCALE NONE			SHEET 1.21

ENG 77.16 3-66

01

NAS 9-1100

	QTY PER ASSEMBLY -1	CODE IDENT	PART NO.	I&T	NOMENCLATURE OR DESCRIPTION	MATERIAL	GOVT SPEC	COML SPEC	STOCK SIZE	PROCESS SYM	FINISH NO.	ZONE
	1		LSC390-19-211	E	DUST CAP	SEE DWG						
	3		GB511J-06-2	E	BOLT	GRUMMAN STD						
	A/R		MS20995NC32	E	SAFETY WIRE	STD PART						
	3		GS550C-0858	E	SCREW	GRUMMAN STD						
	4		GB511J-08-2	E	BOLT	GRUMMAN STD						
	11		AN960D8L	E	WASHER	STD PART						
	22		GT11J-BR08-12	E	TERMINAL INSTL	GRUMMAN STD						
	9		GT11J-BR08-10	E	TERMINAL INSTL	GRUMMAN STD						
	152		AN960D4L	E	WASHER	STD PART						
	8		NAS43DD3-48	E	SPACER TUBE	STD PART						
	4		MS21042L08	E	NUT	STD PART						
	76		GB511J-04-2	E	BOLT	GRUMMAN STD						
	76		MS21042L04	E	NUT	STD PART						
	A/R		GT535U-8	E	TAPE	GRUMMAN STD						
	6		MS21042L06	E	NUT	STD PART						
	11		AN960D6L	E	WASHER	STD PART						
	3		NAS43DD3-40	E	SPACER TUBE	STD PART						
	16		NAS43DD3-32	E	↕	↕						
	4		NAS43DD3-64	E	↕	↕						
	8		NAS43DD3-16	E	SPACER TUBE	STD PART						
	1		LDW390-52014-1	E	AREA INSTL	SEE DWG						
A			LDW280-52607-1	E	LINES INSTL							
CL	-1											

CL = CLEANLINESS LEVEL / LSP14-0011

SYM OR NO.	PROCESS OR FINISH	GRUMMAN SPEC OR MILITARY SPEC	SYM OR NO.	PROCESS OR FINISH	GRUMMAN SPEC OR MILITARY SPEC	SYM OR NO.	PROCESS OR FINISH	GRUMMAN SPEC OR MILITARY SPEC

I & T: IDENTIFICATION AND TRACEABILITY IN ACCORDANCE WITH : NONE

GRUMMAN AIRCRAFT ENGRG CORP, BETHPAGE, L. I., NEW YORK

SIZE	CODE IDENT NO.		
B	26512	LDW280-52607	E (E)
SCALE NONE			SHEET 2.00

ENG 77.2 7-65

01

NAS 9-1100

NOTES:

1. ALL CONNECTOR NUMBERS SHALL BE PLACED ON STRUCTURE ADJACENT TO THE RESPECTIVE CONNECTOR BY RUBBER STAMP PER LSP-14-002 TYPE VII CLASS 2 3/16 HIGH LETTERS.
2. PRIOR TO ASSEMBLY OF GT11F TERMINAL INSTALLATION, FINISH STRUCTURE IN ACCORDANCE WITH LSP390-001, PAR 3.10.
3. AFTER ASSEMBLY OF THE GT11F TERMINAL INSTALLATION AND THE ADDITION OF ALL TERMINAL LUGS REQUIRED, BRUSH COAT THE ENTIRE ASSEMBLY WITH EPON 919. MIX EPON 919 PER LSP14-14.201.
4. FOR SPLICE NUMBERS SEE DRAWING LDW 390-52014 (SHEET 8).
5. SELECTION AND INSTALLATION OF LINE CLAMPS, CLAMP ATTACHING HARDWARE, TAPE, ANTI CHAFE SLEEVE, GROMMETS, LOCKWIRE & STRUCTURAL BONDING SHALL BE IN ACCORDANCE WITH LPC280-23. EXCEPT AS NOTED
6. ALL CABLE CALLOUTS ARE PREFIXED BY LDW 390-. FOR PRIME CALLOUTS SEE LDW390-52014.
7. ~~BOND WIRES TO SURFACE WITH MIL-A-5090D (TYPE I EPON 934A AND CURING AGENT 934B).~~
8. ~~FOR ECA NO.1 & NO.2 TORQUE MS21043-4 NUTS TO 60±5 INCH POUNDS.~~
9. ~~FOR BATTERIES NO. 1, 2, 3 & 4 TORQUE GN511L-0420 NUTS TO 20±5 INCH POUNDS.~~
10. GROUND ALL N4 GROUND WIRES TO NEAREST GROUND STUD FROM CONNECTORS AND TERMINALS (SEE SHEETS 4, 5, 6 & 7).
11. TAPE WIRES TO OUTRIGGERS AND LANDING LEGS USING GT535U-8 TAPE EVERY 6 INCHES. TAPE ACROSS BUNDLE TO EXTEND 1 1/2 INCHES MIN ON EACH SIDE
12. SUBSTITUTION OF NAS1132V-✱, AN525-832R-✱ AND AN525-832-✱ SCREWS FOR THE GB511J-08-✱ BOLT AND NAS1133V-✱, AN525-10R-✱ AND AN525-10-✱ SCREWS FOR THE GB511J-3-✱ BOLT IS PERMISSIBLE.
13. MS21919WDH CLAMPS AND GC500S CLAMPS ARE INTERCHANGEABLE AND EITHER MAY BE USED IN THIS INSTL.

GRUMMAN AIRCRAFT ENGRG CORP., BETHPAGE, L. I., NEW YORK			
SIZE B	CODE IDENT NO. 26512	LDW280-52607	E
SCALE NONE		SHEET 3.00	

ENG 73.1 6-64

01

NAS 9-1100

NOTES (CONTINUED):

~~14. UPON INSTALLATION OF TERMINAL LUGS ON BATTERIES, ECA'S AND CIRCUIT BREAKERS IMMEDIATELY CONFORMAL COAT AS FOLLOWS:~~

~~a. APPLY PRIMER PER LSP-14-14201. CARE MUST BE TAKEN NOT TO APPLY TOO HEAVY A COAT OF PRIMER.~~

~~b. AFTER ALLOWING A MINIMUM OF 30 MINUTES DRYING TIME FOR PRIMER, MIX (EC1663A/B) SEALANT COMPOUND PER LSP-14-14201 & APPLY FIRST COATING OVER ALL EXPOSED SURFACES.~~

~~c. AFTER FIRST COATING CURES, APPLY SECOND & THIRD COAT OF SAME SEALANT COMPOUND, ALLOWING 24 HOURS CURING TIME BETWEEN COATS PER LSP-14-14201.~~

~~NOTE: CARE MUST BE TAKEN THAT EACH COAT COMPLETELY COVERS PRECEEDING COAT & ANY EXPOSED PRIMER.~~

15. TORQUE LSC380-00602-07, J1168, J1164 TO 27-33 INCH POUNDS.
16. SAFETY WIRE IN ACCORDANCE WITH MS33540.
17. COMMERCIAL PART, SEE SPECIFICATION CONTROL DRAWING BEFORE ORDERING.
18. ALL SPLICES OR BUNDLE OF SPLICES IN ENGINE COMPARTMENT SHALL BE WRAPPED WITH A HELICAL WRAP OF ALUMINUM TAPE USING GT835J-8 OR -4 (MYSTIC 7402). WRAP TO EXTEND 2" PAST LAST SPLICE ON EITHER SIDE. 25% MINIMUM OVERLAP OF TAPE IS REQUIRED.
19. ALL RECEPTACLES MOUNTED IN ACCORDANCE WITH THIS DRAWING ARE TO HAVE KEYWAYS POSITIONED IN THE +X OR +Z DIRECTION, UNLESS OTHERWISE SPECIFIED.
20. APPLY 3M SERIES VELVET COATING TO BRACKET PER LSP14-4503, 1/2" x 1/4" APPROX. FOR COLORS SEE VIEW BV-BV. COLOR PART NO'S.: GREY-# 401-B2, YELLOW-# 401-F1, WHITE-# 401-A10, RED-# 403-D10, BLACK-# 403-C10. FOR COLOR CODING WITH TWO (2) COLORS USE 1/4" x 1/4" DIM. SIDE BY SIDE.

GRUMMAN AIRCRAFT ENGRG CORP., BETHPAGE, L. I., NEW YORK			
SIZE B	CODE IDENT NO. 26512	LDW280-52607	E
SCALE NONE		SHEET 3.01	

ENG 73.1 6-64

01

NAS 9-1100

01/05

NAS 9-1100

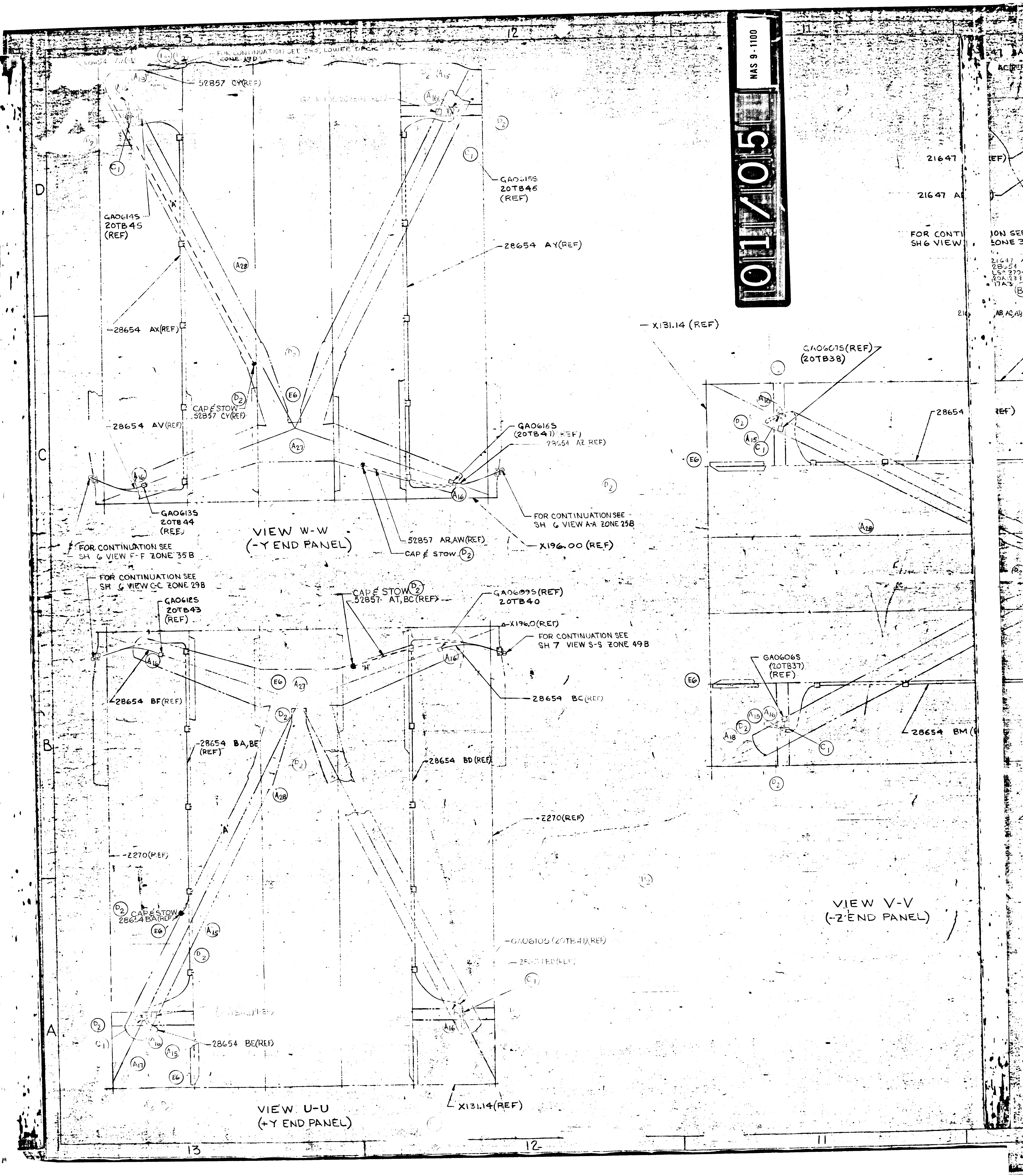

13
12
11
D
C
B
A
FOR CONTINUATION SEE SH 5, LOWER DECK ZONE 47D
52857 CY(REF)
GA0614S
20TB45
(REF)
GA0615S
20TB46
(REF)
28654 AY(REF)
28654 AX(REF)
CAP & STOW 52857 CY(REF)
28654 AV(REF)
GA0616S
(20TB41)(REF)
28654 AZ REF)
GA0613S
20TB44
(REF)
FOR CONTINUATION SEE SH 6 VIEW A-A ZONE 25B
VIEW W-W
(-Y END PANEL)
52857 AR,AW(REF)
CAP & STOW
X196.00 (REF)
FOR CONTINUATION SEE SH 6 VIEW F-F ZONE 35B
FOR CONTINUATION SEE SH 6 VIEW C-C ZONE 29B
GA0612S
20TB43
(REF)
CAP & STOW
52857 AT,BC (REF)
GA0609S(REF)
20TB40
X196.0(REF)
FOR CONTINUATION SEE SH 7 VIEW S-S ZONE 49B
'H'
28654 BF(REF)
28654 BC(REF)
28654 BA,BE (REF)
28654 BD (REF)
'A'
2270(REF)
CAP & STOW 28654 BA(REF)
GA0610S (20TB41)(REF)
28654 BE(REF)
VIEW U-U
(+Y END PANEL)
X131.14(REF)
X131.14 (REF)
GA0607S(REF)
(20TB38)
28654
GA0606S
(20TB37)
(REF)
28654 BM
VIEW V-V
(-Z END PANEL)
21647
21647 A
FOR CONTI
SH6 VIEW
ON SE
ZONE 3
AB,AC,AD
A15
A16
A17
A18
A27
A28
C1
D2
E6

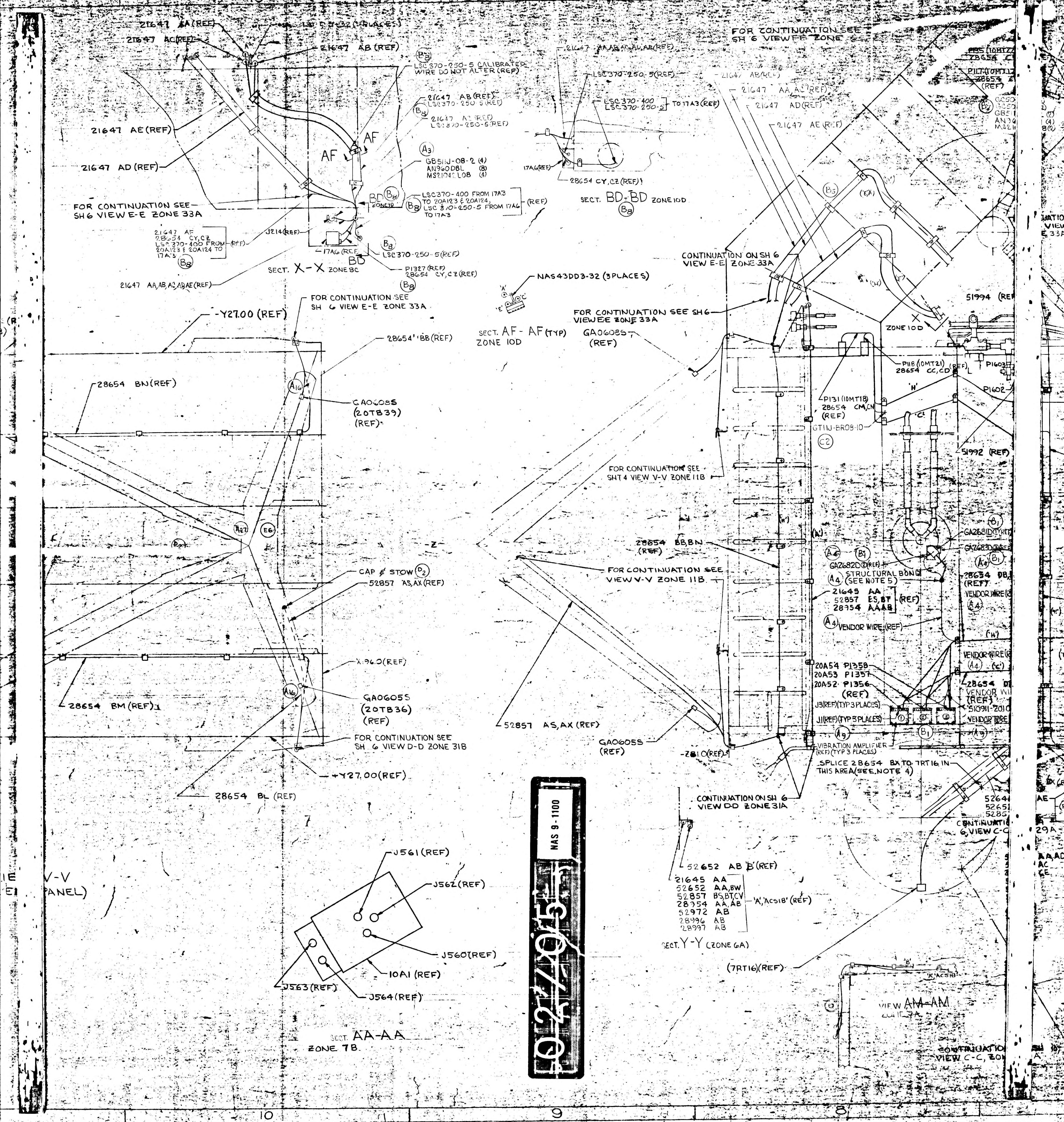
21647 AA(REF)
LSC 370-250-5 CALIBRATED WIRE DO NOT ALTER (REF)
21647 AC(REF)
21647 AB (REF)
21647 AB (REF)
LSC370-250-5(REF)
21647 AE(REF)
21647 AD (REF)
AF
AF
GB511J-08-2 (4)
AN960D8L (8)
MS21042L08 (4)
LSC370-400 FROM 17A3 TO 20A123 & 20A124, LSC 370-250-5 FROM 17A6 TO 17A3 (REF)
FOR CONTINUATION SEE SH6 VIEW E-E ZONE 33A
21647 AF
28654 CY,CZ
LSC 370-400 FROM 20A123 & 20A124 TO 17A3 (REF)
J214(REF)
17A6(REF)
LSC370-250-5(REF)
P1327(REF)
28654 CY,CZ(REF)
SECT. X-X ZONE 8C
21647 AA,AB,AC,AD,AE(REF)
FOR CONTINUATION SEE SH 6 VIEWFF ZONE
LSC370-250-5(REF)
LSC370-400
LSC370-250-5 TO 17A3(REF)
21647 AB(REF)
21647 AA,AC(REF)
21647 AD(REF)
21647 AE(REF)
17A6(REF)
28654 CY,CZ(REF)
SECT. BD-BD ZONE 10D
NAS43DD3-32 (3PLACES)
CONTINUATION ON SH 6 VIEW E-E ZONE 33A
FOR CONTINUATION SEE SH6 VIEW E-E ZONE 33A
GA06085 (REF)
SECT. AF-AF(TYP) ZONE 10D
ZONE 10D
51994 (REF)
-Y27.00 (REF)
FOR CONTINUATION SEE SH 6 VIEW E-E ZONE 33A
28654 BB (REF)
28654 BN(REF)
GA06085 (20TB39) (REF)
P118 (10MT21) 28654 CC,CD(REF)
P1603
P1602
P131 (10MT18) 28654 CM,CN (REF)
GT11J-BR08-10
51992 (REF)
FOR CONTINUATION SEE SHT 4 VIEW V-V ZONE 11B
-Z-
28654 BB,BN (REF)
FOR CONTINUATION SEE VIEW V-V ZONE 11B
CAP & STOW
52857 AS,AX(REF)
GA2682D(REF)
STRUCTURAL BOND (SEE NOTE 5)
21645 AA
52857 ES,BT (REF)
28354 AA,AB
VENDOR WIRE(REF)
28654 DB
VENDOR WIRE
X-96.0(REF)
GA06055 (20TB36) (REF)
28654 BM (REF)
FOR CONTINUATION SEE SH 6 VIEW D-D ZONE 31B
+Y27.00(REF)
28654 BL (REF)
52857 AS,AX (REF)
GA06055 (REF)
-Z81.0(REF)
20A54 P1358
20A53 P1357
20A52 P1356
(REF)
J3(REF)(TYP 3 PLACES)
J1(REF)(TYP 3 PLACES)
VIBRATION AMPLIFIER (REF)(TYP 3 PLACES)
SPLICE 28654 BX TO 7RT16 IN THIS AREA(SEE NOTE 4)
28654
VENDOR WIRE
510911-201
VENDOR WIRE
CONTINUATION ON SH 6 VIEW DD ZONE 31A
CONTINUATION SH 6, VIEW C-C
52652 AB 'B'(REF)
21645 AA
52652 AA,BW
52857 BS,BT,CV
28354 AA,AB
52972 AB
28996 AB
28997 AB
'A','AC518'(REF)
SECT. Y-Y (ZONE 6A)
(7RT16)(REF)
VIEW AM-AM
CONTINUATION VIEW C-C, ZONE
J561(REF)
J562(REF)
J560(REF)
10A1 (REF)
J563(REF)
J564(REF)
SECT. AA-AA ZONE 7B.
V-V PANEL)
10
9
8

02/05

NAS 9-1100

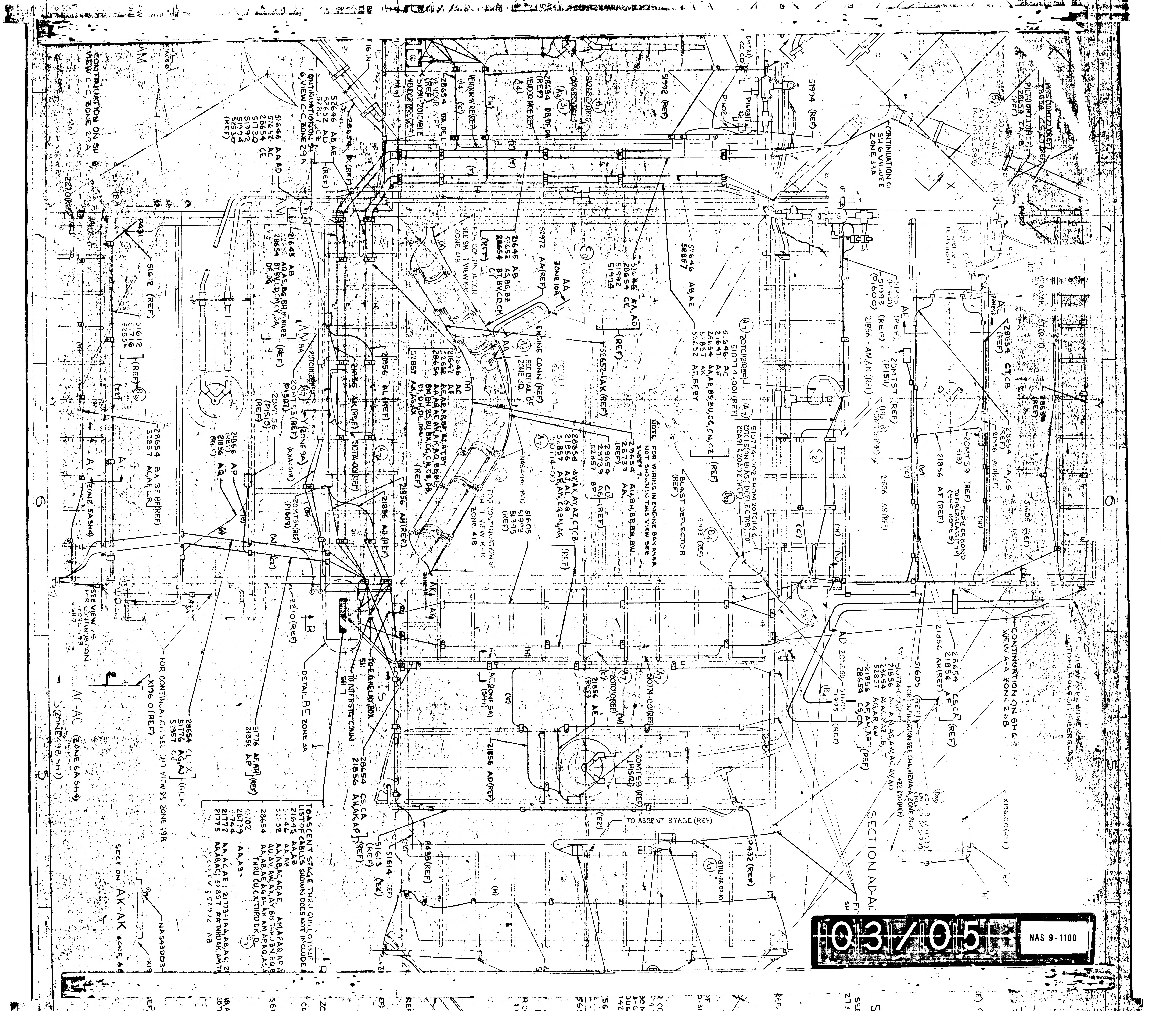
CONTINUATION ON SH 6 VIEW C-C, ZONE 29A
CONTINUATION ON SH 6 VIEW A-A ZONE 26B
SECTION AD-AD
SECTION AC-AC (ZONE 6A SH4)
SECTION AK-AK
ENGINE CONN (REF)
BLAST DEFLECTOR
TO ASCENT STAGE (REF)
DETAIL BE ZONE 3A
TO EXPLOSIVE DEVICES RELAY BOX
TO INTERSTG CONN
FOR CONTINUATION SEE SH 7 VIEW K-K ZONE 41B
FOR CONTINUATION SEE SH 7 VIEW SS ZONE 19B
TO ASCENT STAGE THRU QUILL OT INE LIST OF CABLES SHOWN DOES NOT INCLUDE
X196.0 (REF)
NAS43DD3
P431
P432 (REF)
P433 (REF)
51612 (REF)
51613 (REF)
51614
51605 (REF)
51606 (REF)
51992 (REF)
51994 (REF)
51993 (REF)
28654 CT,CB
21856 AM,AN (REF)
21856 AD (REF)
21856 AS (REF)
21856 AF (REF)
21856 AR (REF)
22652 -1AK (REF)
22710 (REF)
51074-001 (REF)

03/05

NAS 9-1100

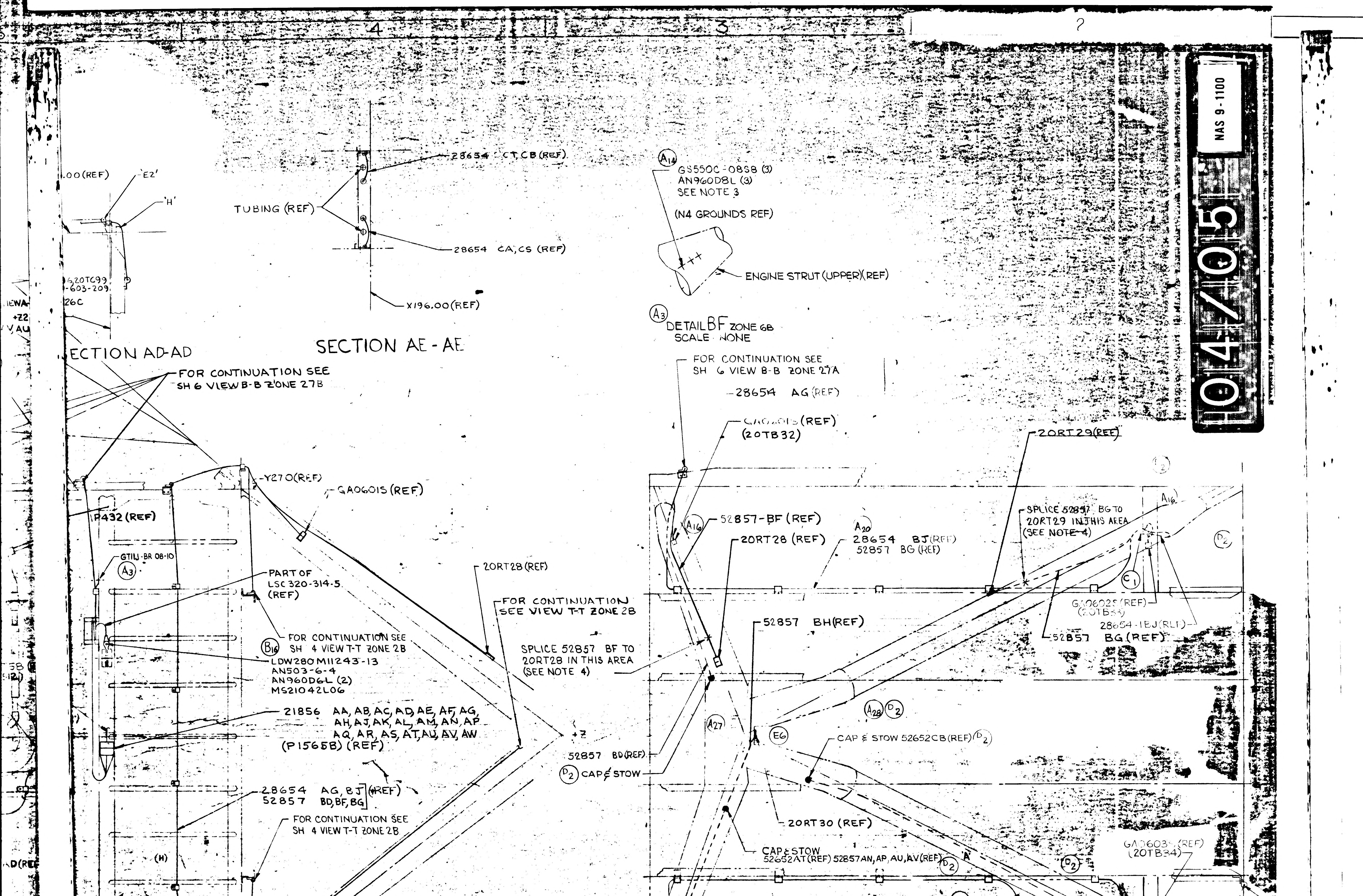
.00 (REF)
'E2'
'H'
520TC99
-603-209
26C
TUBING (REF)
28654 CT,CB (REF)
28654 CA,CS (REF)
X196.00 (REF)
SECTION AE - AE
ECTION AD-AD
FOR CONTINUATION SEE SH 6 VIEW B-B ZONE 27B
A14
GS550C-08S8 (3)
AN960D8L (3)
SEE NOTE 3
(N4 GROUNDS REF)
ENGINE STRUT (UPPER) (REF)
A3
DETAIL BF ZONE 6B
SCALE NONE
FOR CONTINUATION SEE SH 6 VIEW B-B ZONE 27A
28654 AG (REF)
GA0601S (REF)
(20TB32)
20RT29 (REF)
Y270 (REF)
GA0601S (REF)
P432 (REF)
GTIU-BR 08-10
A3
PART OF LSC320-314-5 (REF)
B16
FOR CONTINUATION SEE SH 4 VIEW T-T ZONE 2B
LDW280M11243-13
AN503-6-4
AN960D6L (2)
MS21042L06
21856 AA, AB, AC, AD, AE, AF, AG, AH, AJ, AK, AL, AM, AN, AP, AQ, AR, AS, AT, AU, AV, AW
(P1565B) (REF)
28654 AG, BJ (REF)
52857 BD, BF, BG
FOR CONTINUATION SEE SH 4 VIEW T-T ZONE 2B
(H)
P433 (REF)
E2
51614 (REF)
51613 ('E2')
(REF)
(REF)
Y270 (REF)
Z281.0 (REF)
20RT28 (REF)
FOR CONTINUATION SEE VIEW T-T ZONE 2B
SPLICE 52857 BF TO 20RT28 IN THIS AREA (SEE NOTE 4)
+Z
52857 BD (REF)
D2
CAP & STOW
GA0604S
(20TB35)
(REF)
A16
52857-BF (REF)
20RT28 (REF)
A20
28654 BJ (REF)
52857 BG (REF)
SPLICE 52857 BG TO 20RT29 IN THIS AREA (SEE NOTE 4)
A16
D2
C1
GA0602S (REF)
(20TB34)
28654-1EJ (RLI)
52857 BG (REF)
52857 BH (REF)
A28
D2
A27
E6
CAP & STOW 52652CB (REF) D2
20RT30 (REF)
CAP & STOW
52652AT (REF) 52857AN, AP, AU, AV (REF) D2
GA0603S (REF)
(20TB34)
D2
A17
A16
E6
A19
CAP & STOW
28654 BG, BK (REF)
52857 BE (REF)
D2
C1
A16
D2
28654 AW (REF)
FOR CONTINUATION SEE SH 7 VIEW R-R ZONE 47B
VIEW T-T
(+Z END PANEL)
R (SH7 ZONE 47B)
ENT STAGE THRU GUILLOTINE
CABLES SHOWN DOES NOT INCLUDE ASCENT CABLES
AA, AB
AA, AB
AA, AB, AC, AD, AE, AM, AP, AQ, AR, AS, AT
AU, AV, AW, AX, AY, BB THRU BN, BQ, BW, BR, BS, BT, BU, BY
AA, AB, AE, AG, AH, AK, AM, AP, AQ, AS, AU
THRU CU, CX, THRU DK, DL
C3
AA, AB
AA, AC, AE ; 21773-1 AA, AB, AC; 21774-1 AB, AC
AA, AB, AC; 52857 ~~AA~~ THRU AK, AM THRU BV, CB THRU CJ,
CK, CR, CU, CV ; 52972 AB
(REF)
A3
A13
LDW280M16125 (REF)
LSC320-309-3-1 (REF)
LDW390-52014-1
A12
NAS43DD3-16
X196.0 (REF)
SECTION AK-AK ZONE 6B
DETAIL BE ZONE 6B
SCALE: NONE
W
W
V
V
T
T
FWD
U
U
FOR ENGNG REF ONLY
(VIEW LOOKING DOWN)
SCALE: NONE
4
3
2

04/05

NAS 9-1100

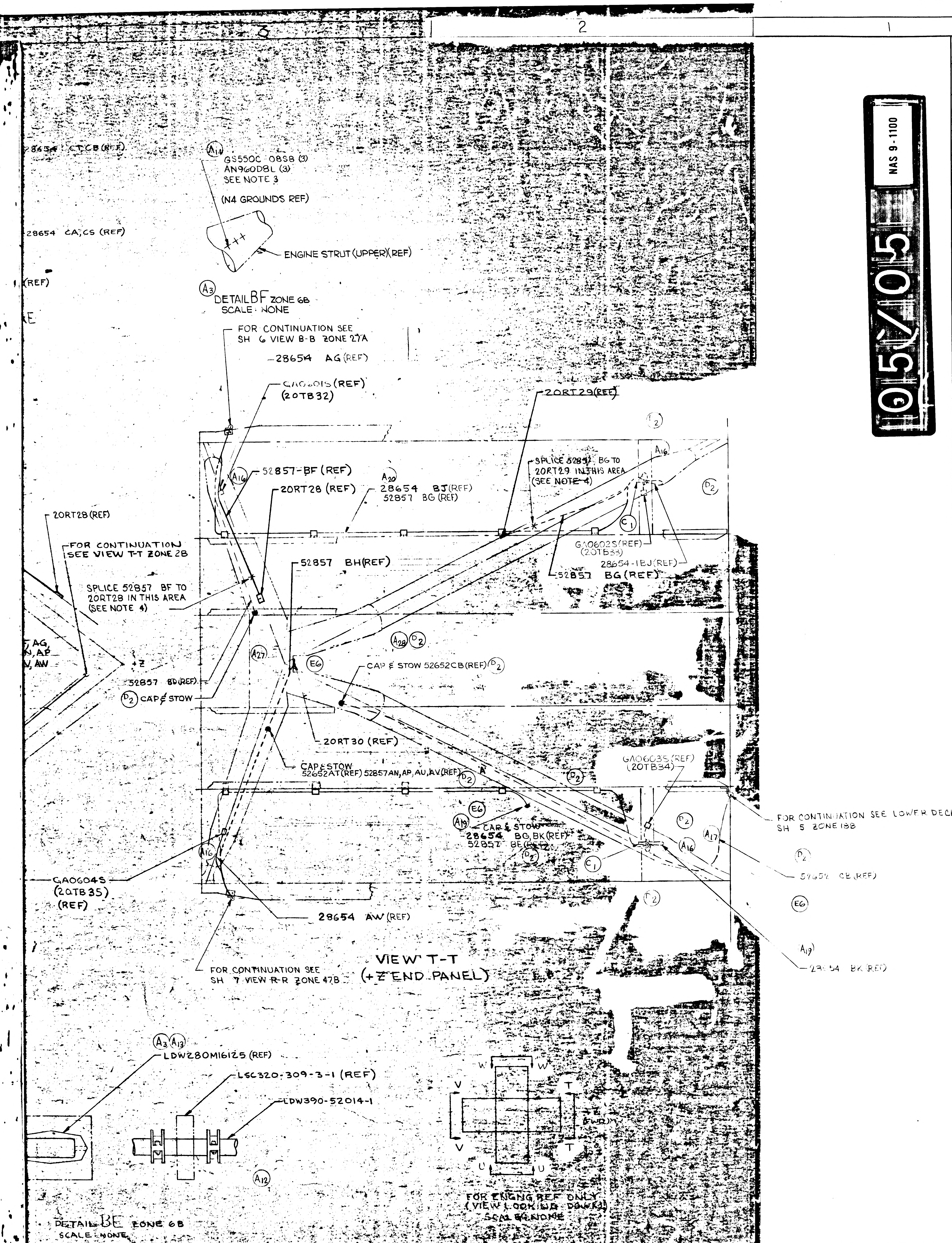
28654 CT,CB (REF)
28654 CA,CS (REF)
(REF)
(A14)
GS550C 08S8 (3)
AN960D8L (3)
SEE NOTE 3
(N4 GROUNDS REF)
ENGINE STRUT (UPPER)(REF)
(A3) DETAIL BF ZONE 6B
SCALE: NONE
FOR CONTINUATION SEE
SH 6 VIEW B-B ZONE 27A
28654 AG (REF)
GA0601S (REF)
(20TB32)
(A16)
52857-BF (REF)
20RT28 (REF)
A20
28654 BJ (REF)
52857 BG (REF)
20RT29 (REF)
SPLICE 52857 BG TO
20RT29 IN THIS AREA
(SEE NOTE 4)
D2
C1
A16
GA0602S (REF)
(20TB33)
28654-1BJ (REF)
52857 BG (REF)
20RT28 (REF)
FOR CONTINUATION
SEE VIEW T-T ZONE 2B
SPLICE 52857 BF TO
20RT28 IN THIS AREA
(SEE NOTE 4)
52857 BH (REF)
AG,
AP
AW
+Z
52857 BD (REF)
D2 CAP & STOW
A27
E6
A28 D2
CAP & STOW 52652CB (REF) D2
20RT30 (REF)
CAP & STOW
52652AT (REF) 52857AN, AP, AU, AV (REF) D2
A
D2
GA0603S (REF)
(20TB34)
FOR CONTINUATION SEE LOWER DECK
SH 5 ZONE 18B
E6
A19
CAR & STOW
28654 BG, BK (REF)
52857 BE (REF)
D2
C1
A16
A17
D2
52652 CB (REF)
E6
A19
28654 BK (REF)
D2
A16
GA0604S
(20TB35)
(REF)
28654 AW (REF)
FOR CONTINUATION SEE
SH 7 VIEW R-R ZONE 47B
VIEW T-T
(+Z END PANEL)
A3 A13
LDW280M16125 (REF)
LSC320-309-3-1 (REF)
LDW390-52014-1
A12
DETAIL BE ZONE 6B
SCALE: NONE
W
W
V
V
T
T
U
U
+Z (FWD)
FOR ENGNG REF ONLY
(VIEW LOOKING DOWN)
SCALE: NONE
3
2
1
A
B
C
D

05/05

NAS 9-1100

MANUFACTURING OPERATIONS UNLESS OTHERWISE SPECIFIED NOTES CHECKED √ APPLY TO THIS DWG.	
PART NUMBER AND ALL OTHER MARKINGS IN REGION MARKED ▭ USE BOTH SIDES IF NECESSARY.	
FILLET AND INSIDE CORNER RADII TOLERANCES .016R TO .062R ± .010 .063R TO .250R ± .015 OVER .250R ± .030	
DEPTH SHOWN FOR TAPPED HOLES IS FULL THDS. 2-3 IMP THDS. BEYOND PERMISSIBLE.	
EXTERNAL THREAD LENGTH SHOWN INCLUDES 2 IMPERFECT THREADS MAX.	
DO NOT CADMIUM PLATE & PAINT HOLES OR SURFACES MARKED WITH DOUBLE ASTERISK.	
MISMATCH STEP OF ± .005 PERMISSIBLE DUE TO CHANGE OF CUTTERS AT INSIDE INTERSECTING SURFACES.	
DIAMETERS MARKED MUST BE CONCENTRIC WITHIN FULL INDICATOR READING	
HOLES MUST BE KEPT FREE OF CHROME PLATING SOLUTION.	
ALL DIMENSIONS SHOWN TO BE MET AFTER CADMIUM PLATING. THICKNESS OF PLATE .0003 MIN. TO .0005 MAX. MIN. THICKNESS TO BE .0002 ON THREADED AREAS. NO ALLOWANCE FOR PLATING IN HOLES	
125 √ SURFACE ROUGHNESS INCLUDING REAMED HOLES PER MIL-STD-10	
200 √ FOR ALL DRILLED HOLES	
REMOVE ALL BURRS. BREAK ALL EDGES .015-.031	
INSPECTION INFORMATION MINIMUM PERMISSIBLE AVERAGE EDGE DISTANCE MARKED IS	
SYMBOL √ DENOTES SURFACE TO BE MACHINED	
UNLESS OTHERWISE SPECIFIED TOLERANCE ON FLANGES IS ± 1/32	
LENGTHS OF AN, NAS & MS AL ALY RIVETS SHORTER THAN 1 INCH ARE NOT SPECIFIED.	
TOLERANCE ON LOFTED DELINEATIONS IS	

DWG SIZE 40 X

PRINTING INFO ONLY
FULL SIZE SHEET AREA (42 X) 40.5 SQ. FT.
1/2 SIZE SHEET AREA (1/4 OF FULL) 10.0 SQ. FT.

PRINT TRIM LINE

	GRUMMAN AIRCRAFT ENGRG CORP., BETHPAGE, L. I., NEW YORK			
	SIZE K	CODE IDENT NO. 26512	LDW280-52607	E
MODEL OR END ITEM	SCALE 1/4		SHEET 4	

LDW280-52607 E

LDW280-52607 E

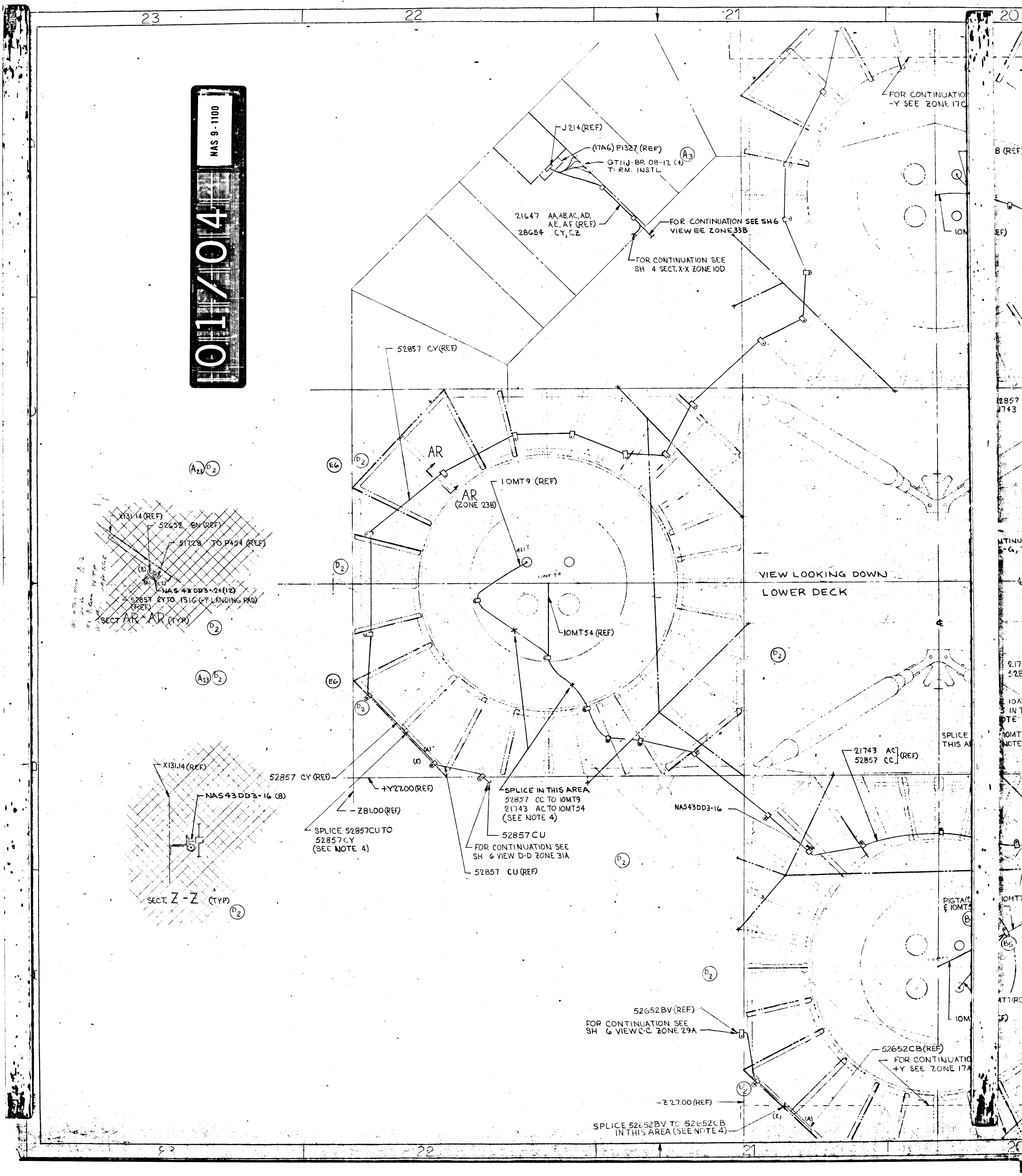

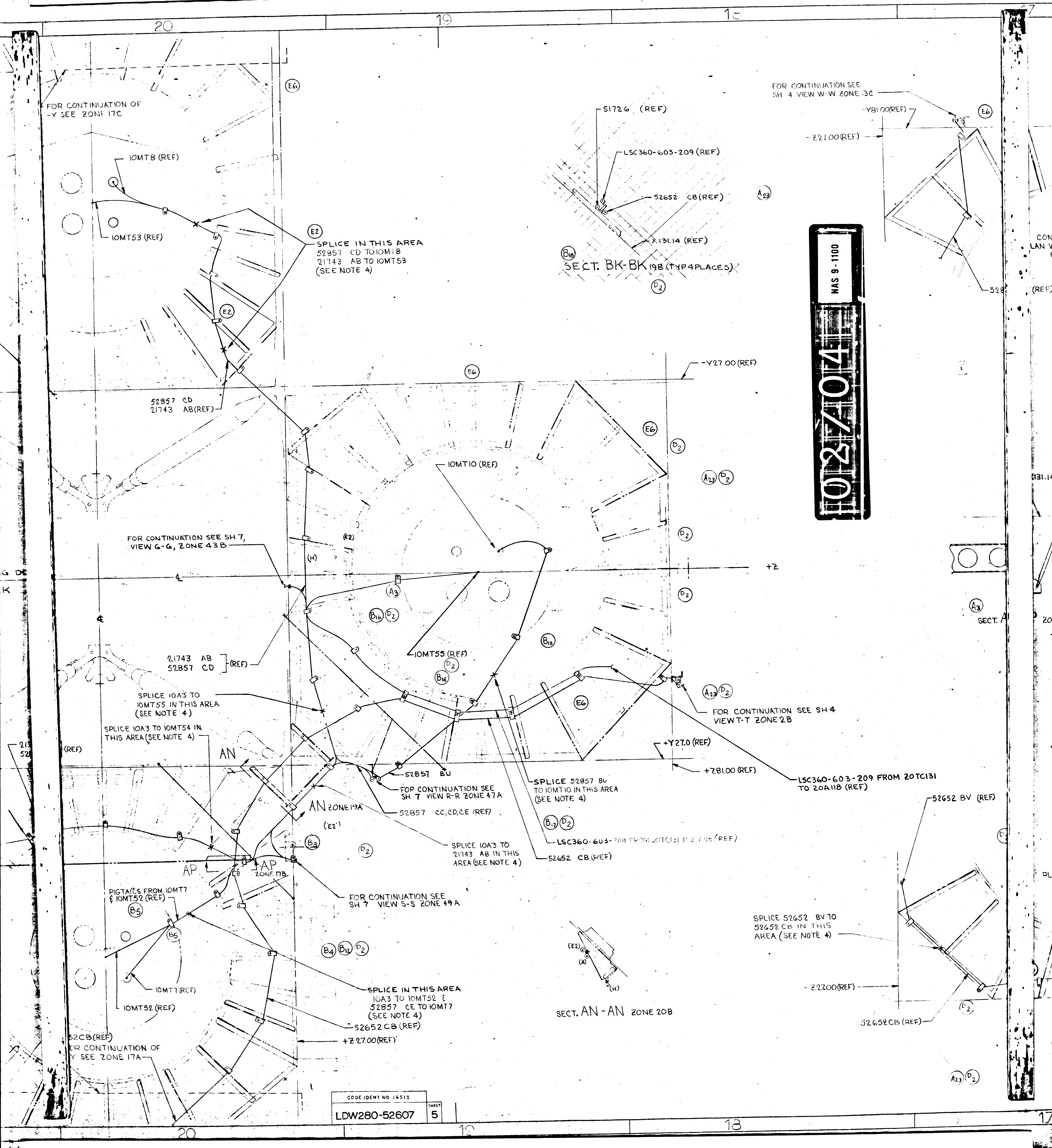

20
19
18
17
FOR CONTINUATION OF -Y SEE ZONE 17C
10MT8 (REF)
10MT53 (REF)
SPLICE IN THIS AREA 52857 CD TO 10MT8 21743 AB TO 10MT53 (SEE NOTE 4)
E2
E6
52857 CD 21743 AB (REF)
S1726 (REF)
LSC360-603-209 (REF)
52652 CB (REF)
X131.14 (REF)
SECT. BK-BK 19B (TYP 4 PLACES)
B18
D2
A23
FOR CONTINUATION SEE SH 4 VIEW W-W ZONE 3C
-Y81.00 (REF)
-Z27.00 (REF)
02/04
NAS 9-1100
-Y27.00 (REF)
10MT10 (REF)
FOR CONTINUATION SEE SH 7, VIEW G-G, ZONE 43B
(E2)
(H)
+Z
A3
B16
21743 AB 52857 CD (REF)
10MT55 (REF)
SPLICE 10A3 TO 10MT55 IN THIS AREA (SEE NOTE 4)
SPLICE 10A3 TO 10MT54 IN THIS AREA (SEE NOTE 4)
(REF)
AN
52857 BU
FOR CONTINUATION SEE SH 7 VIEW R-R ZONE 47A
AN ZONE 19A
(E2')
52857 CC, CD, CE (REF)
SPLICE 52857 BU TO 10MT10 IN THIS AREA (SEE NOTE 4)
B17
LSC360-603-209 FROM 20TC131 TO 20A118 (REF)
52652 CB (REF)
SPLICE 10A3 TO 21743 AB IN THIS AREA (SEE NOTE 4)
FOR CONTINUATION SEE SH 4 VIEW T-T ZONE 2B
+Y27.0 (REF)
+Z81.00 (REF)
52652 BV (REF)
B3
AP
AP ZONE 17B
FOR CONTINUATION SEE SH 7 VIEW S-S ZONE 49 A
PIGTAILS FROM 10MT7 & 10MT52 (REF)
B5
B4
B12
10MT7 (REF)
10MT52 (REF)
SPLICE IN THIS AREA 10A3 TO 10MT52 & 52857 CE TO 10MT7 (SEE NOTE 4)
52652 CB (REF)
+Z27.00 (REF)
52CB (REF)
OR CONTINUATION OF Y SEE ZONE 17A
(E2)
(A)
(H)
SECT. AN-AN ZONE 20B
SPLICE 52652 BV TO 52652 CB IN THIS AREA (SEE NOTE 4)
-Z27.00 (REF)
52652 CB (REF)
SECT.
CODE IDENT NO 14512
LDW280-52607
SHEET 5

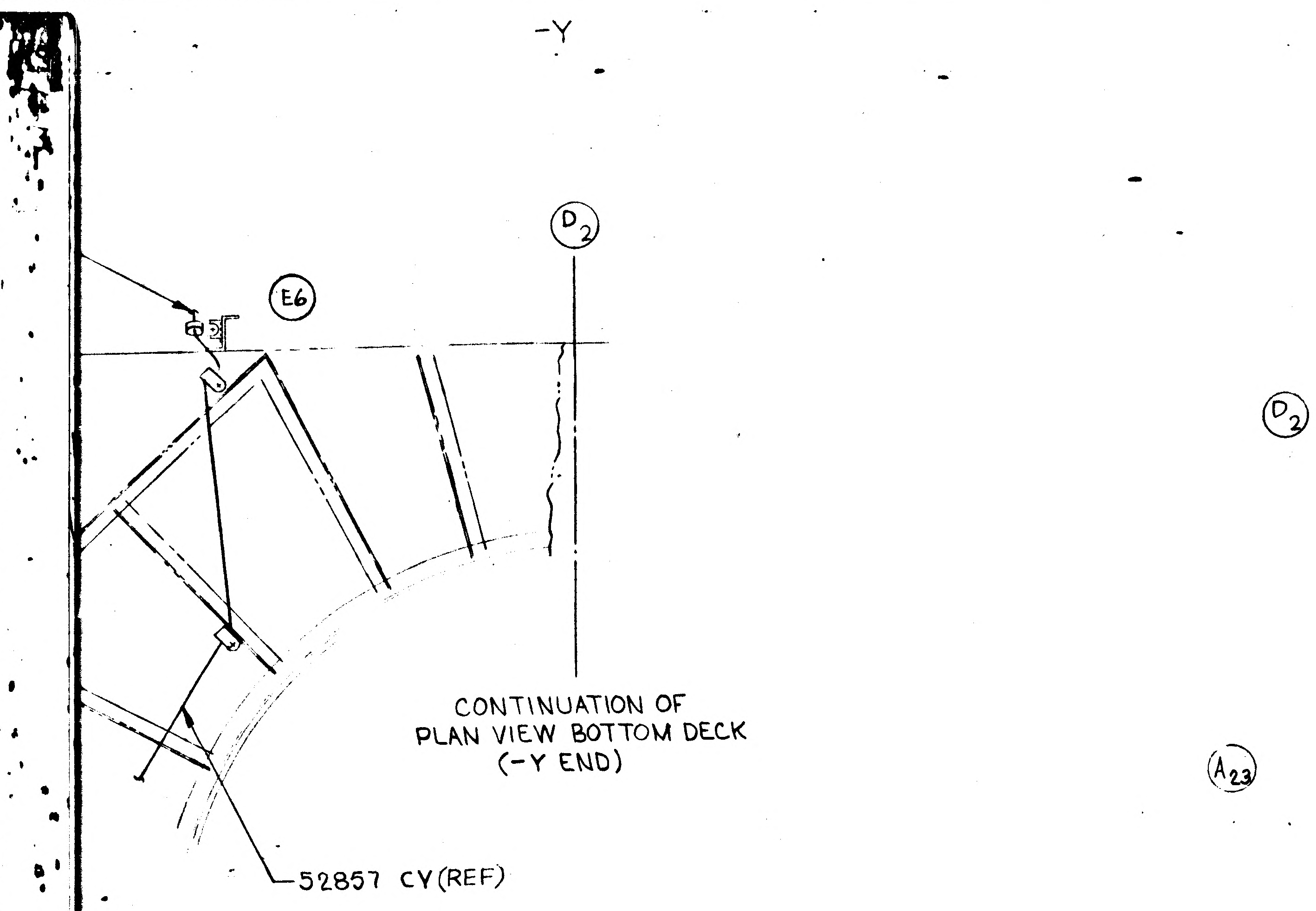
-Y
D2
E6
CONTINUATION OF
PLAN VIEW BOTTOM DECK
(-Y END)
52857 CY(REF)
D2
A23

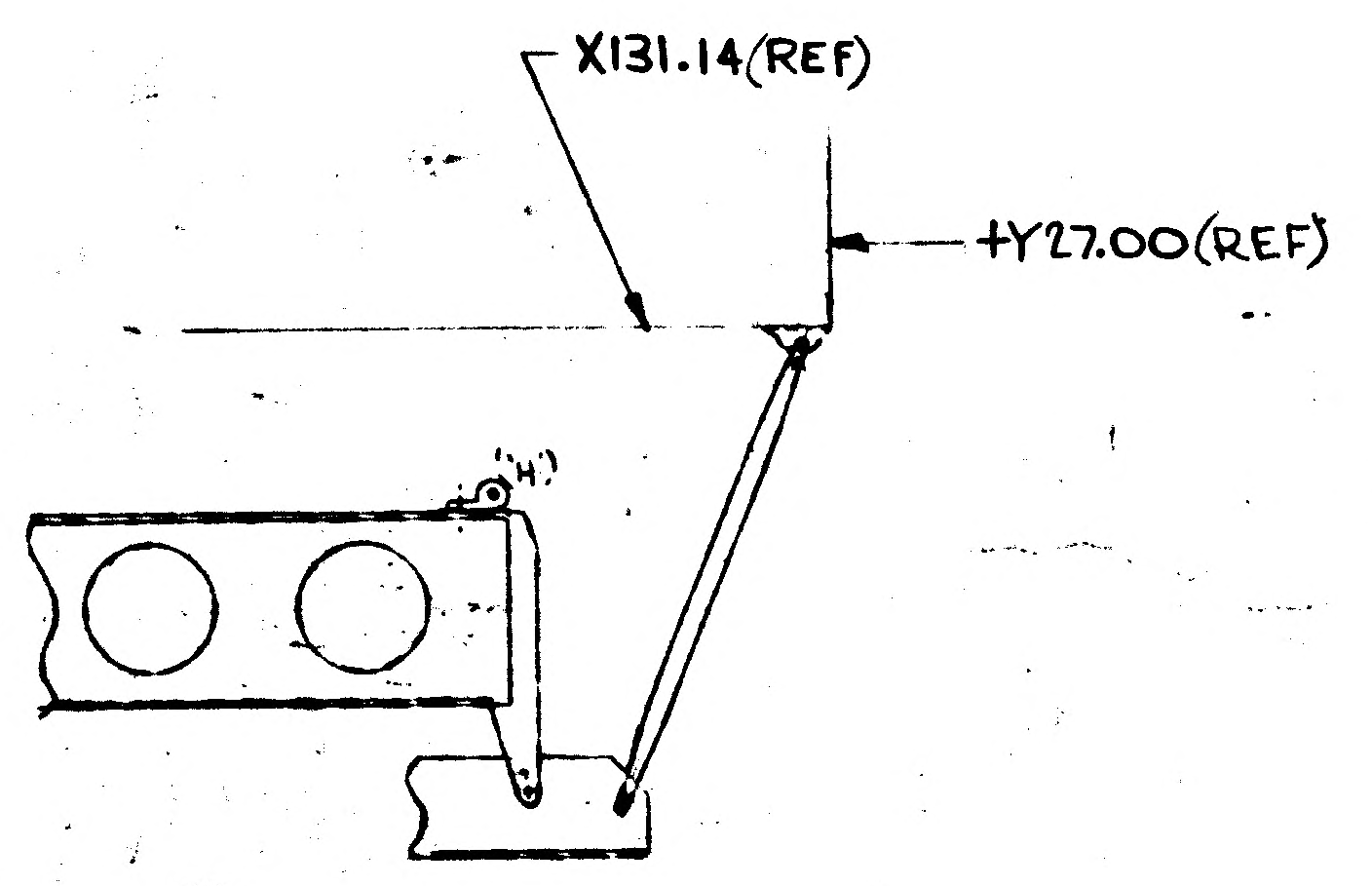
X131.14(REF)
+Y27.00(REF)
A3

SECT. AP-AP ZONE 20B

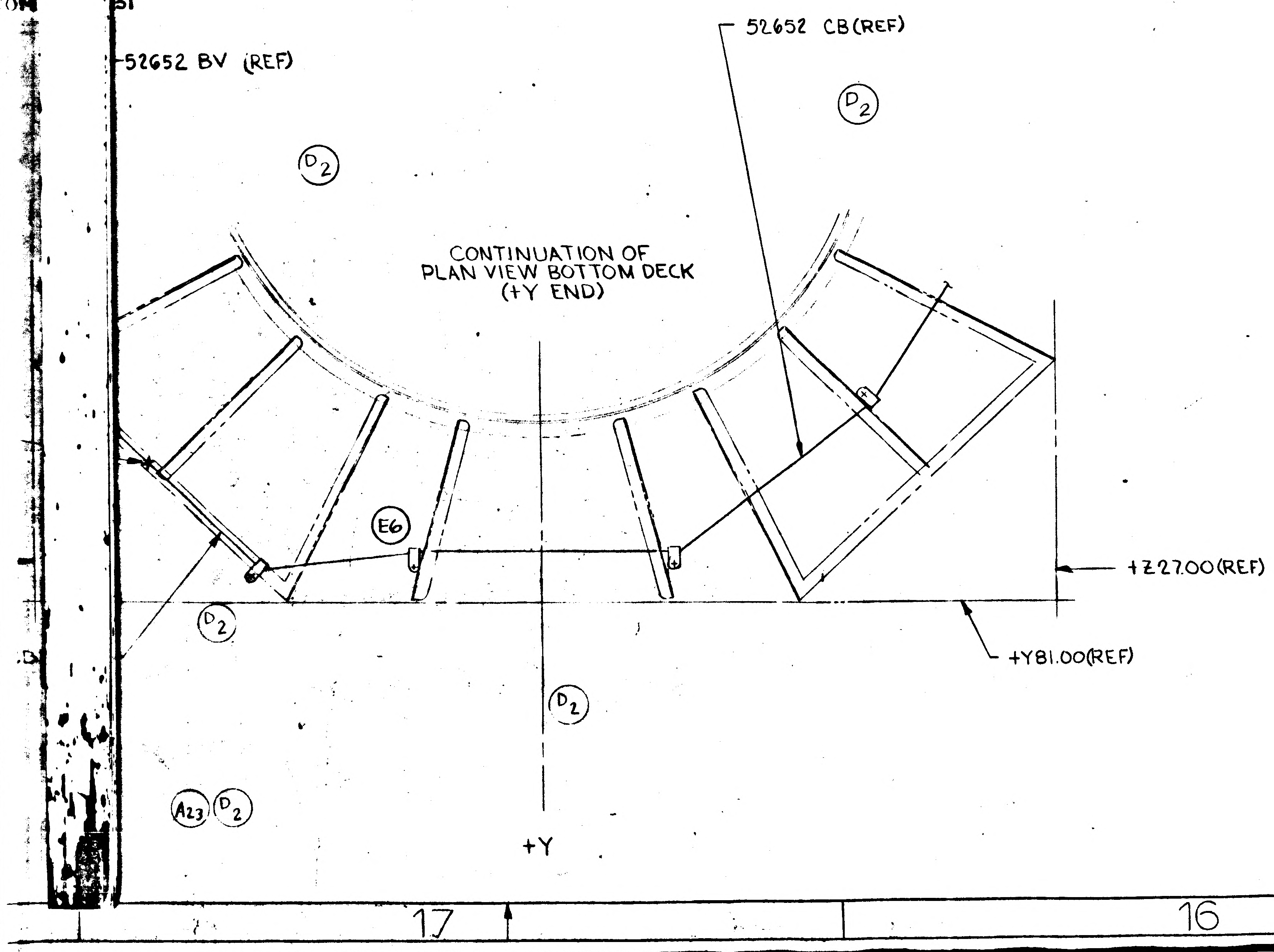
52652 BV (REF)
52652 CB(REF)
D2
D2
CONTINUATION OF
PLAN VIEW BOTTOM DECK
(+Y END)
E6
+Z27.00(REF)
+Y81.00(REF)
D2
D2
A23
D2
+Y

CODE IDENT NO. 26512
LDW280-52607
SHEET 5

03/04
NAS 9-1100

SIZE K
12

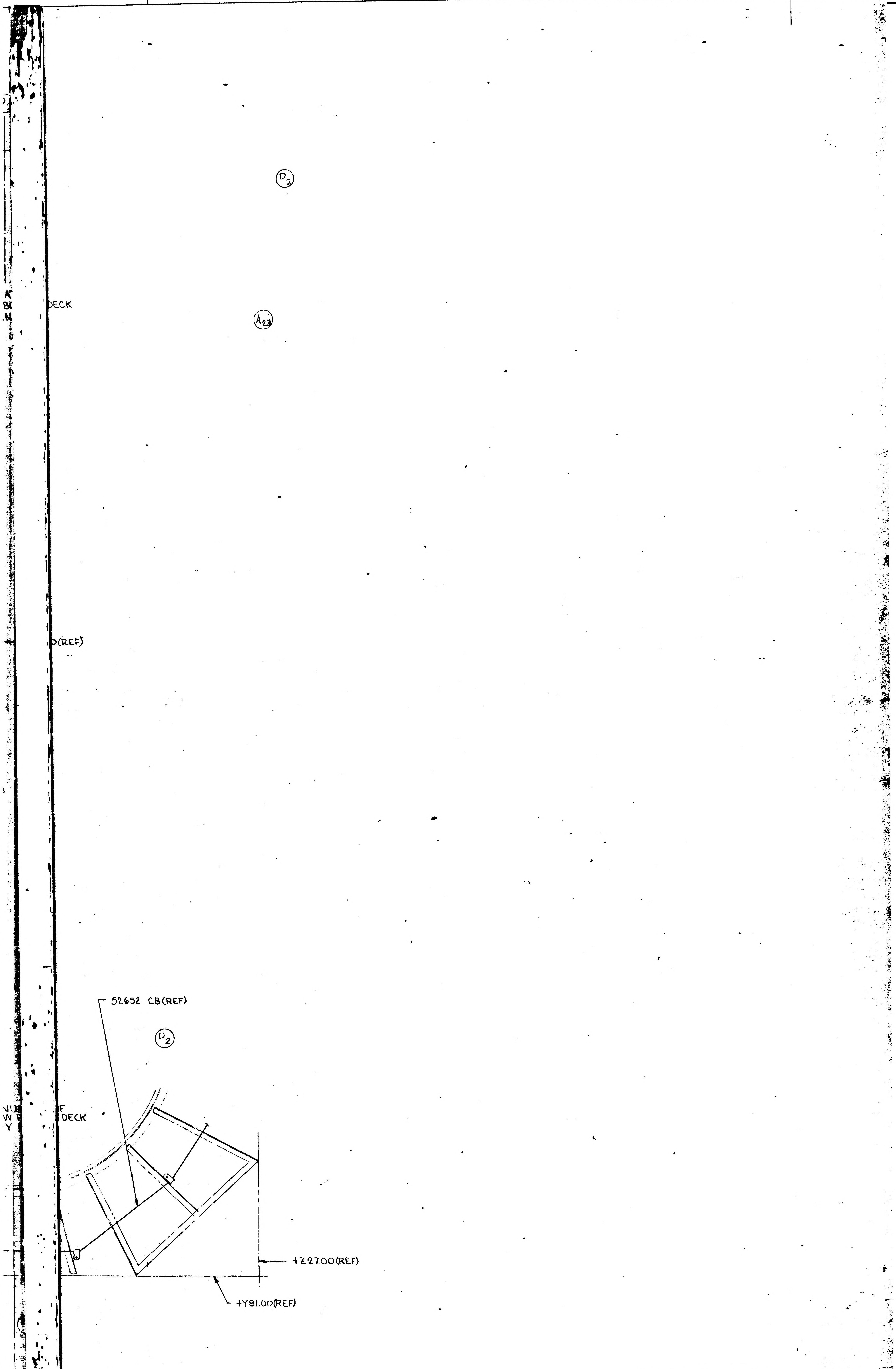

MANUFACTURING OPERATIONS UNLESS OTHERWISE SPECIFIED NOTES CHECKED √ APPLY TO THIS DWG.	
PART NUMBER AND ALL OTHER MARKINGS IN REGION MARKED ⊠ USE BOTH SIDES IF NECESSARY.	
FILLET AND INSIDE CORNER RADII TOLERANCES .016R TO .062R ± .010 .063R TO .250R ± .015 OVER .250R ± .030	
DEPTH SHOWN FOR TAPPED HOLES IS FULL THDS. 2-3 IMP THDS. BEYOND PERMISSIBLE.	
EXTERNAL THREAD LENGTH SHOWN INCLUDES 2 IMPERFECT THREADS MAX.	
DO NOT CADMIUM PLATE & PAINT HOLES OR SURFACES MARKED WITH DOUBLE ASTERISK.	
MISMATCH STEP OF ± .005 PERMISSIBLE DUE TO CHANGE OF CUTTERS AT INSIDE INTERSECTING SURFACES.	
DIAMETERS MARKED MUST BE CONCENTRIC WITHIN FULL INDICATOR READING	
HOLES MUST BE KEPT FREE OF CHROME PLATING SOLUTION.	
ALL DIMENSIONS SHOWN TO BE MET AFTER CADMIUM PLATING. THICKNESS OF PLATE .0003 MIN. TO .0005 MAX. MIN. THICKNESS TO BE .0002 ON THREADED AREAS. NO ALLOWANCE FOR PLATING IN HOLES	
125 √ SURFACE ROUGHNESS INCLUDING REAMED HOLES PER MIL-STD-10	
200 √ FOR ALL DRILLED HOLES	
REMOVE ALL BURRS. BREAK ALL EDGES .015-.031	
INSPECTION INFORMATION MINIMUM PERMISSIBLE AVERAGE EDGE DISTANCE MARKED IS	
SYMBOL √ DENOTES SURFACE TO BE MACHINED	
UNLESS OTHERWISE SPECIFIED TOLERANCE ON FLANGES IS ± 1/32	
LENGTHS OF AN, NAS & MS AL ALY RIVETS SHORTER THAN 1 INCH ARE NOT SPECIFIED.	
TOLERANCE ON LOFTED DELINEATIONS IS	

DWG SIZE 40 X 00

PRINTING INFO ONLY

FULL SIZE SHEET AREA (42 X 54)= 31.5 SQ. FT.

1/2 SIZE SHEET AREA (1/4 OF FULL)= 8.0 SQ. FT.

PRINT TRIM LINE

04/04 NAS 9-1100

LDW280-52607E

LDW280-52607E

CODE IDENT NO. 26512	SHEET
LDW280-52607	5

	GRUMMAN AIRCRAFT ENGRG CORP., BETHPAGE, L. I., NEW YORK			
	SIZE K	CODE IDENT NO. 26512	LDW280-52607	E
MODEL OR END ITEM	SCALE		SHEET 5	

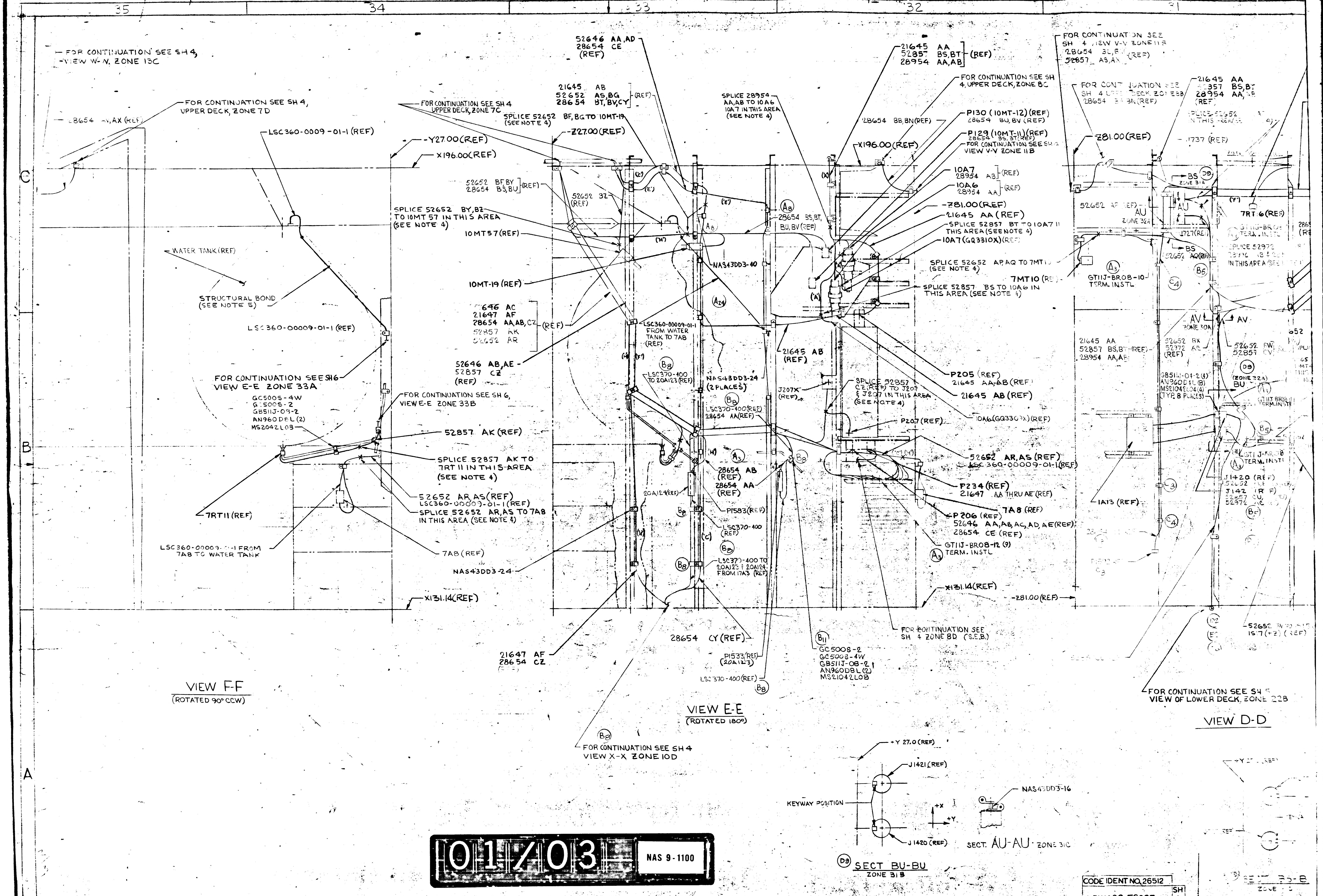
35
34
33
32
31
C
B
A
FOR CONTINUATION SEE SH 4, VIEW W-W, ZONE 13C
FOR CONTINUATION SEE SH 4, UPPER DECK, ZONE 7D
28654 AV,AX (REF)
LSC360-0009-01-1 (REF)
Y27.00 (REF)
X196.00 (REF)
WATER TANK (REF)
STRUCTURAL BOND (SEE NOTE 5)
LSC360-00009-01-1 (REF)
FOR CONTINUATION SEE SH 6 VIEW E-E ZONE 33A
FOR CONTINUATION SEE SH 6, VIEW E-E ZONE 33B
GC500S-4W
GC500S-2
GB51IJ-09-2
AN960DEL (2)
MS2042L08
52857 AK (REF)
SPLICE 52857 AK TO 7RT11 IN THIS AREA (SEE NOTE 4)
52652 AR,AS (REF)
LSC360-00009-01-1 (REF)
SPLICE 52652 AR,AS TO 7A8 IN THIS AREA (SEE NOTE 4)
7RT11 (REF)
7A8 (REF)
LSC360-00009-01-1 FROM 7A8 TO WATER TANK
NAS43DD3-24
X131.14 (REF)
52646 AA,AD
28654 CE
(REF)
21645 AB
52652 AS,BG
28654 BT,BV,CY
(REF)
FOR CONTINUATION SEE SH 4 UPPER DECK, ZONE 7C
SPLICE 52652 BF,BG TO 10MT-19 (SEE NOTE 4)
Z27.00 (REF)
52652 BF,BY
28654 BS,BU (REF)
52652 32 (REF)
SPLICE 52652 BY,BZ TO 10MT 57 IN THIS AREA (SEE NOTE 4)
10MT57 (REF)
10MT-19 (REF)
21646 AC
21647 AF
28654 AA,AB,CZ
52857 RK
52652 AR
(REF)
52646 AB,AE
52857 CZ
(REF)
NAS43DD3-40
LSC360-00009-01-1 FROM WATER TANK TO 7A8 (REF)
LSC370-400 TO 20A123 (REF)
NAS43DD3-24 (2 PLACES)
LSC370-400 (REF)
28654 AA (REF)
28654 AB (REF)
28654 AA (REF)
20A124 (REF)
P1583 (REF)
LSC370-400 (REF)
LSC370-400 TO 20A123 / 20A124 FROM 17A3 (REF)
21645 AB (REF)
J207X (REF)
SPLICE 52857 CZ (REF) TO J207 & J207 IN THIS AREA (SEE NOTE 4)
SPLICE 28954 AA,AB TO 10A6 10A7 IN THIS AREA (SEE NOTE 4)
28654 BS,BT, BU,BV (REF)
A8
A24
B8
A3
C
H
E
X
21645 AA
52857 BS,BT
28954 AA,AB
(REF)
FOR CONTINUATION SEE SH 4, UPPER DECK, ZONE 8C
28654 BB,BN (REF)
P130 (10MT-12) (REF)
28654 BU,BV (REF)
P129 (10MT-11) (REF)
28654 BS,BT (REF)
FOR CONTINUATION SEE SH 4 VIEW V-V ZONE 11B
X196.00 (REF)
10A7
28954 AB (REF)
10A6
28954 AA (REF)
Z81.00 (REF)
21645 AA (REF)
SPLICE 52857 BT TO 10A7 IN THIS AREA (SEE NOTE 4)
10A7 (GQ3310X) (REF)
SPLICE 52652 AP,AQ TO 7MT10 (SEE NOTE 4)
7MT10 (REF)
SPLICE 52857 BS TO 10A6 IN THIS AREA (SEE NOTE 4)
P205 (REF)
21645 AA,AB (REF)
21645 AB (REF)
10A6 (GQ3309X) (REF)
P207 (REF)
52652 AR,AS (REF)
LSC360-00009-01-1 (REF)
P234 (REF)
21647 AA THRU AE (REF)
7A8 (REF)
P206 (REF)
52646 AA,AB,AC,AD,AE (REF)
28654 CE (REF)
GT11J-BR08-12 (9) TERM. INSTL
X131.14 (REF)
Z81.00 (REF)
FOR CONTINUATION SEE SH 4 ZONE 8D (S.E.B.)
28654 CY (REF)
21647 AF
28654 CZ
P1533 (REF) (20A123)
LSC370-400 (REF)
B11
GC5008-2
GC5008-4W
GB51IJ-08-2
AN960D8L (2)
MS21042L08
FOR CONTINUATION SEE SH 4 VIEW X-X ZONE 10D
FOR CONTINUATION SEE SH 4 VIEW V-V ZONE 11B
28654
52857 AS,AX (REF)
FOR CONTINUATION SEE SH 4 UPPER DECK, ZONE 8B
28654 BB,BN (REF)
21645 AA
52857 BS,BT
28954 AA,AB
(REF)
SPLICE 52652 IN THIS AREA
Z81.00 (REF)
1737 (REF)
BS
ZONE 31B
D9
52652 AP (REF)
AU
ZONE 32A
AJ
J727 (REF)
7RT6 (REF)
GT11J-BR08 TERM. INSTL
SPLICE 52972 IN THIS AREA
BS
52652 AQ (REF)
B5
A3
GT11J-BR08-10 TERM. INSTL
C4
AV
ZONE 30A
AV
21645 AA
52857 BS,BT (REF)
28954 AA,AB
52652 BX
52972 AZ
(REF)
52652
52857
GB51IJ-01-2 (8)
AN960D1L (8)
MS21042L04 (8)
(TYP. 8 PLACES)
D9
(ZONE 32A)
BU
A1
GT11J-BR08 TERM. INSTL
B5
GT11J-BR08 TERM. INSTL
J1420 (REF)
J1421 (REF)
52652
52857
52972
B5
1A13 (REF)
C3
C4
52652 AV
15.7 (+Z) (REF)
FOR CONTINUATION SEE SH 5 VIEW OF LOWER DECK, ZONE 22B
+Y 27.0 (REF)
J1421 (REF)
KEYWAY POSITION
+X
+Y
J1420 (REF)
NAS43DD3-16
+Y (REF)

VIEW F-F
(ROTATED 90° CCW)

VIEW E-E
(ROTATED 180°)

VIEW D-D

SECT. AU-AU ZONE 31C

D9 SECT BU-BU
ZONE 31B

SECT BS-B
ZONE

01/03

NAS 9-1100

CODE IDENT NO. 26512	
LDW280-52607	SH 6

VIEW D-D
VIEW C-C
(ROTATED 90°CCW)
VIEW B-B
(ROTATED 180°)
SECT BS-BS
ZONE 31C
SECT. AV-AV ZONE 3 B
SECT. BL-BL 29B
SECT. AW-AW ZONE 29B
SECTION AL-AL ZONE 29B
(TYP 2 PLACES)
SECT AX-AX ZONE 2
52652 AD(REF)
21645 AA
357 BS,BT
28954 AA,AB
52652 AE,AG,AJ,AK,AP,
28654 BB,BL,BM,BN,BX
52857 AS,AX
(REF)
SPLICE IN THIS AREA
(SEE NOTE 4)
52652 AG,AJ,AK (REF)
FOR CONTINUATION SEE SH 4, VIEW OF UPPER DECK, ZONE 7B
X196.00(REF)
52652 AF,AH
52972 AA
(REF)
Z27.00(REF)
FOR CONTINUATION SEE SH7 VIEW J-J ZONE 40C
NAS43DD3-32(2 PLACES)
52652-1AQ (REF)
Z81.00(REF)
7RT16(REF)
28654 BX
(REF)
SPLICE 52972 AA AB & 28997 AB & 28997 AB IN THIS AREA (SEE NOTE 4)
AV
ZONE 30A
52652 AB(REF)
52652 BW,
52857 CV
SPLICE 28654 AQ TO 10MT47
52652 BJ,BT TO 10MT45,10MT56 IN THIS AREA (SEE NOTE 4)
BU
(ZONE 32A)
21645 AA
52652 AA,AF,AH,BJ
52857 BS,BT,CV
28954 AA,AB
52972 AA,AB
28997 AB
(REF)
10MT45(REF)
10MT56(REF)
52652 AC(REF)
FROM P174-TO J737(REF)
52652 BH,BU(REF)
FOR CONTINUATION SEE VIEW C-C,ZONE 29B
52652 BJ,BT(REF)
HELIUM TANK(REF)
SPLICE:
28654 AE TO 10MT48 & 28654 AK TO 10MT50 & 28654-1AH TO 10MT49, IN THIS AREA. (SEE NOTE 4)
J1420 (REF)
J142 (REF)
28654 AE,AH,AK
(REF)
10MT48(REF)
10MT50(REF)
X131.14(REF)
52652 BV TO 1S15(+Y) & 1S17(-Z) (REF)
10MT49(REF)
52652 BV(REF)
FOR CONTINUATION SEE SH 5, VIEW OF LOWER DECK, ZONE 22B
1A13 (REF)
FOR CONTINUATION SEE SH 4, UPPER DECK, ZONE 7B
('H')
52857 AC(REF)
+Y 27.00 (REF)
P565
(REF)
51716 (REF)
52531 (REF)
FOR CONTINUATION SEE SH4, UPPER DECK, ZONE 7A
+Y81.00(REF)
X196.00(REF)
LDW280-52608(REF)
J566(REF) 28654 BA,BE,BF(REF)
FOR CONTINUATION SEE SH 4, VIEW U-U, ZONE 13A
(E2)
52531 (REF)
52530 (REF)
51730 (REF)
10MT59
(REF)
P1620 TO P1607A
(REF)
P1619 TO P1607B
(REF)
52530 (REF)
(E2)
52530 (REF)
52652 BS(REF)
AMBIENT He TANK(REF)
BOND WIRES ONTO TANK
3 PLACES
SEE NOTE 5
10MT47(REF)
51730 (REF)
52652 BH
BU(REF)
51716 (REF)
SPLICE 52652 BH,BU TO 10MT45,10MT56 IN THIS AREA (SEE NOTE 4)
10MT56(REF)
10MT45
(REF)
NAS43DD3-16
P1374 (REF)
(20A109)
HELIUM TANK (REF)
NAS43DD3-16(3)
52857 CR(REF)
52857 AF,CR(REF)
LSC 360-603-209
FROM 20TC93 TO 20A108
FROM 20TC97 TO 20A109
(REF)
X131.14(REF)
FOR CONTINUATION SEE SH 5, LOWER DECK, ZONE 21A
52857 AF(REF)
NAS43DD3-16
P461
51130 (REF)
P460(REF)
51716 (REF)
P1375
(20A108)(REF)
52857BV
LSC 360-603-209 (REF)
AW
ZONE 29A
BL
(ZONE 30A)
AL
(ZONE 28A)
FOR CONTINUATION SEE SH4, UPPER DECK, ZONE 5C
51613 ('E2') (REF)
P432 (REF)
FOR CONTINUATION SEE SH4 VIEW T-T ZONE 3B
21856 AA,AB,AC,AE,AG,AJ,AL,AN,AQ,AS,AT,AU,AV,AW (REF)
X196.00(REF)
+Z27.00(REF)
28654 AG,BJ
52857 BF,BG (REF)
GE51N-04-2(4)
AN960 D4L(8)
MS 21043L04(4)
510774-001
(REF)
AX
ZONE 27A
NAS43DD3-16(3)
+20A95(REF)
P1367(REF)
21856 AA
(REF)
510774-001(REF)
21856 AD,AF,AH,AK,AM,AP,AR, (REF)
21856 AB
(REF)
P1368
(20A94)
(REF)
510774-001(REF)
21856 AF,AM
(REF)
21856 AT(REF)
21856 A
(REF)
P1366 (REF)
(20A96)
+Z81.00(REF)
X131.14(REF)
Z27.0(REF)
Z27.0(REF)
+Y27.0(REF)
NAS43DD3-16(REF)
J737(REF)
KEYWAY POSITION
+X
+Y

CODE IDENT NO. 26512
LDW280-52607
SH 6

02/031

NAS 9-1100

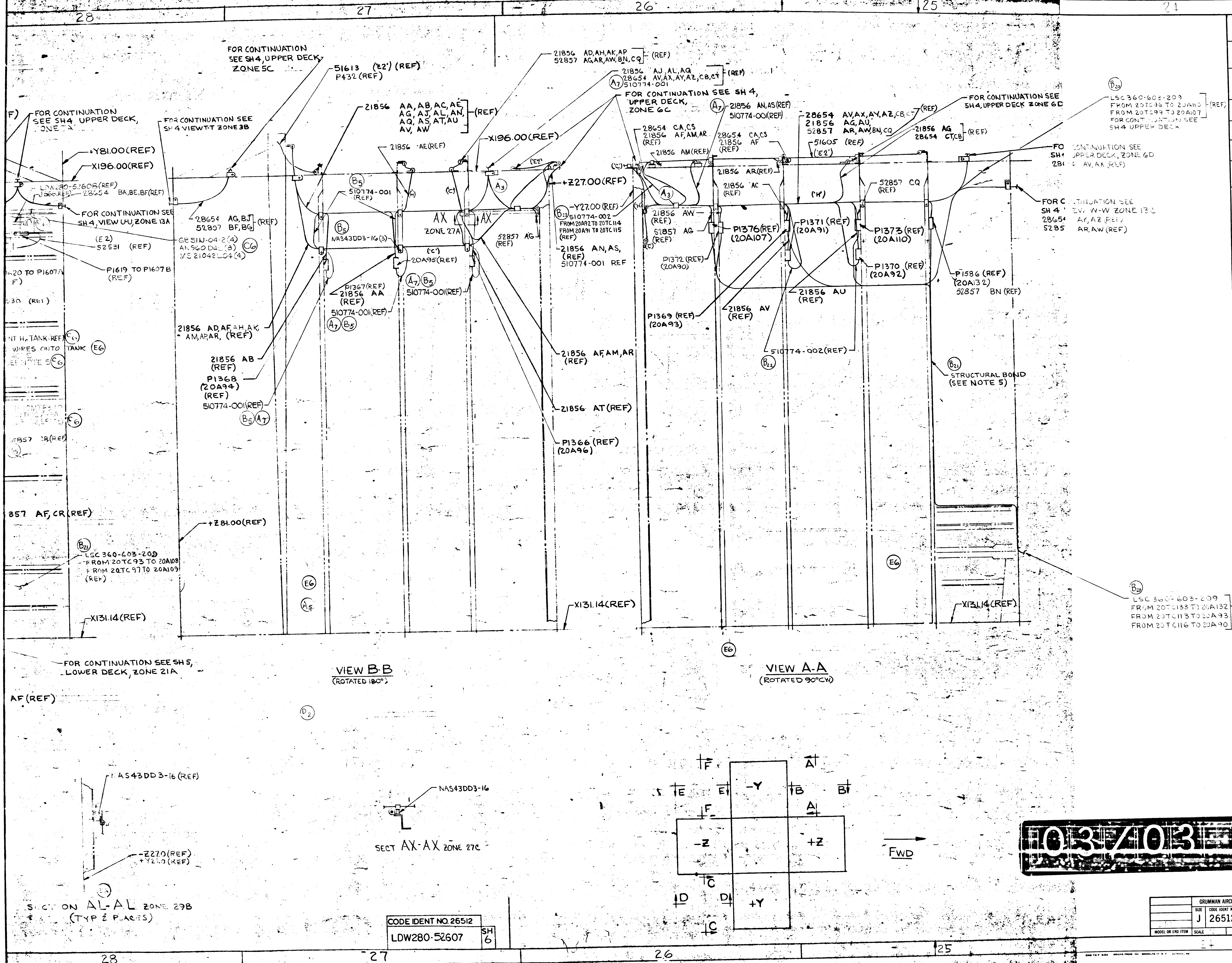
28
27
26
25
24
FOR CONTINUATION SEE SH4, UPPER DECK, ZONE 5C
51613 ('E2') (REF)
P432 (REF)
21856 AD,AH,AK,AP
52857 AG,AR,AW,BN,CQ (REF)
21856 AJ,AL,AQ
28654 AV,AX,AY,AZ,CB,CT (REF)
A7 510774-001
FOR CONTINUATION SEE SH 4, UPPER DECK, ZONE 6C
FOR CONTINUATION SEE SH4, UPPER DECK ZONE 6D
B20 LSC 360-603-209
FROM 20TC96 TO 20A110
FROM 20TC99 TO 20A107 (REF)
FOR CONTINUATION SEE SH4 UPPER DECK
FOR CONTINUATION SEE SH4 UPPER DECK, ZONE 1A
FOR CONTINUATION SEE SH4 VIEW T-T ZONE 3B
21856 AA,AB,AC,AE, AG,AJ,AL,AN, AQ,AS,AT,AU AV,AW (REF)
21856 AE(REF)
X196.00(REF)
+Y81.00(REF)
-X196.00(REF)
LDW280-52608(REF)
28654 BA,BE,BF(REF)
FOR CONTINUATION SEE SH4, VIEW U-U, ZONE 13A
28654 AG,BJ
52857 BF,BG (REF)
(E2)
52531 (REF)
GE51N-04-2(4)
AN960D4L(8)
MS21042L04(4)
C6
P1619 TO P1607B (REF)
B5
510774-001 (REF)
B5
NAS43DD3-16(3)
AX
ZONE 27A
AX
('C')
('H')
A3
+Z27.00(REF)
B23
-Y27.00(REF)
510774-002
FROM 20A92 TO 20TC114
FROM 20A91 TO 20TC115 (REF)
52857 AG (REF)
20A95(REF)
A7 B5
510774-001(REF)
P1367(REF)
21856 AA (REF)
510774-001(REF)
A7 B5
21856 AN,AS, (REF)
510774-001 REF
A7 21856 AN,AS(REF)
510774-001(REF)
28654 CA,CS
21856 AF,AM,AR (REF)
28654 CA,CS
21856 AF (REF)
21856 AM(REF)
28654 AV,AX,AY,AZ,CB,CT (REF)
21856 AG,AU
52857 AR,AW,BN,CQ
21856 AG
28654 CT,CB (REF)
51605 (REF)
('E2')
FOR CONTINUATION SEE SH4 UPPER DECK, ZONE 6D
28654 AV,AX (REF)
21856 AR(REF)
21856 AC (REF)
('H')
52857 CQ (REF)
A3
21856 AW (REF)
52857 AG (REF)
P1376(REF) (20A107)
P1371 (REF) (20A91)
P1373(REF) (20A110)
FOR CONTINUATION SEE SH4 VIEW W-W ZONE 13C
28654 AY,AZ (REF)
52857 AR,AW(REF)
P1372(REF) (20A90)
P1370 (REF) (20A92)
P1586 (REF) (20A132)
52857 BN (REF)
21856 AU (REF)
P1369 (REF) (20A93)
21856 AV (REF)
510774-002(REF)
B22
B21
STRUCTURAL BOND (SEE NOTE 5)
21856 AD,AF,AH,AK, AM,AP,AR, (REF)
21856 AB (REF)
P1368 (20A94) (REF)
510774-001(REF)
B5 A7
21856 AF,AM,AR (REF)
21856 AT(REF)
P1366 (REF) (20A96)
P1620 TO P1607A
F)
530 (REF)
HT H2 TANK(REF) C6
WIRES ONTO TANK E6
E6
C6
52857 CR(REF)
52857 AF,CR(REF)
+Z81.00(REF)
B23
LSC 360-603-209
FROM 20TC93 TO 20A108
FROM 20TC97 TO 20A109 (REF)
E6
A5
X131.14(REF)
X131.14(REF)
E6
X131.14(REF)
B20
LSC 360-603-209
FROM 20TC133 TO 20A132
FROM 20TC113 TO 20A93 (REF)
FROM 20TC116 TO 20A90
E6
FOR CONTINUATION SEE SH5, LOWER DECK, ZONE 21A
AF (REF)
VIEW B-B
(ROTATED 180°)
VIEW A-A
(ROTATED 90°CW)
D2
NAS43DD3-16 (REF)
-Z27.0(REF)
+Y27.0(REF)
SECTION AL-AL ZONE 29B
(TYP 2 PLACES)
NAS43DD3-16
SECT AX-AX ZONE 27C
F
A
E
E
-Y
B
B
F
A
-Z
+Z
C
D
D
+Y
C
FWD
LDW280-52607 E
LDW280-52607 E

03/03

NAS 9-1100

CODE IDENT NO. 26512	SH
LDW280-52607	6

GRUMMAN AIRCRAFT ENGRG CORP., BETHPAGE, L. I., NEW YORK

SIZE	CODE IDENT NO.		
J	26512	LDW280-52607	E

MODEL OR END ITEM
SCALE
SHEET

DWG SIZE 34 X
PRINTING INFO ONLY
FULL SIZE SHEET AREA (36 X) = SQ. FT.
PRINT TRIM LINE

MANUFACTURING OPERATIONS

UNLESS OTHERWISE SPECIFIED NOTES CHECKED √ APPLY TO THIS DWG.

PART NUMBER AND ALL OTHER MARKINGS IN REGION MARKED ⊠ USE BOTH SIDES IF NECESSARY.	
FILLET AND INSIDE CORNER RADII TOLERANCES .016R TO .062R ± .010 .063R TO .250R ± .015 OVER .250R ± .030	
DEPTH SHOWN FOR TAPPED HOLES IS FULL THDS. 2-3 IMP THDS. BEYOND PERMISSIBLE.	
EXTERNAL THREAD LENGTH SHOWN INCLUDES 2 IMPERFECT THREADS MAX.	
DO NOT CADMIUM PLATE & PAINT HOLES OR SURFACES MARKED WITH DOUBLE ASTERISK.	
MISMATCH STEP OF ± .005 PERMISSIBLE DUE TO CHANGE OF CUTTERS AT INSIDE INTERSECTING SURFACES.	
DIAMETERS MARKED MUST BE CONCENTRIC WITHIN FULL INDICATOR READING	
HOLES MUST BE KEPT FREE OF CHROME PLATING SOLUTION.	
ALL DIMENSIONS SHOWN TO BE MET AFTER CADMIUM PLATING. THICKNESS OF PLATE .0003 MIN. TO .0005 MAX. MIN. THICKNESS TO BE .0002 ON THREADED AREAS. NO ALLOWANCE FOR PLATING IN HOLES	
125 √ SURFACE ROUGHNESS INCLUDING REAMED HOLES PER MIL-STD-10	
200 √ FOR ALL DRILLED HOLES	
REMOVE ALL BURRS. BREAK ALL EDGES .015-.031	
INSPECTION INFORMATION MINIMUM PERMISSIBLE AVERAGE EDGE DISTANCE MARKED IS	
SYMBOL √ DENOTES SURFACE TO BE MACHINED	
UNLESS OTHERWISE SPECIFIED TOLERANCE ON FLANGES IS ± 1/32	
LENGTHS OF AN, NAS & MS AL ALY RIVETS SHORTER THAN 1 INCH ARE NOT SPECIFIED.	
TOLERANCE ON LOFTED DELINEATIONS IS	

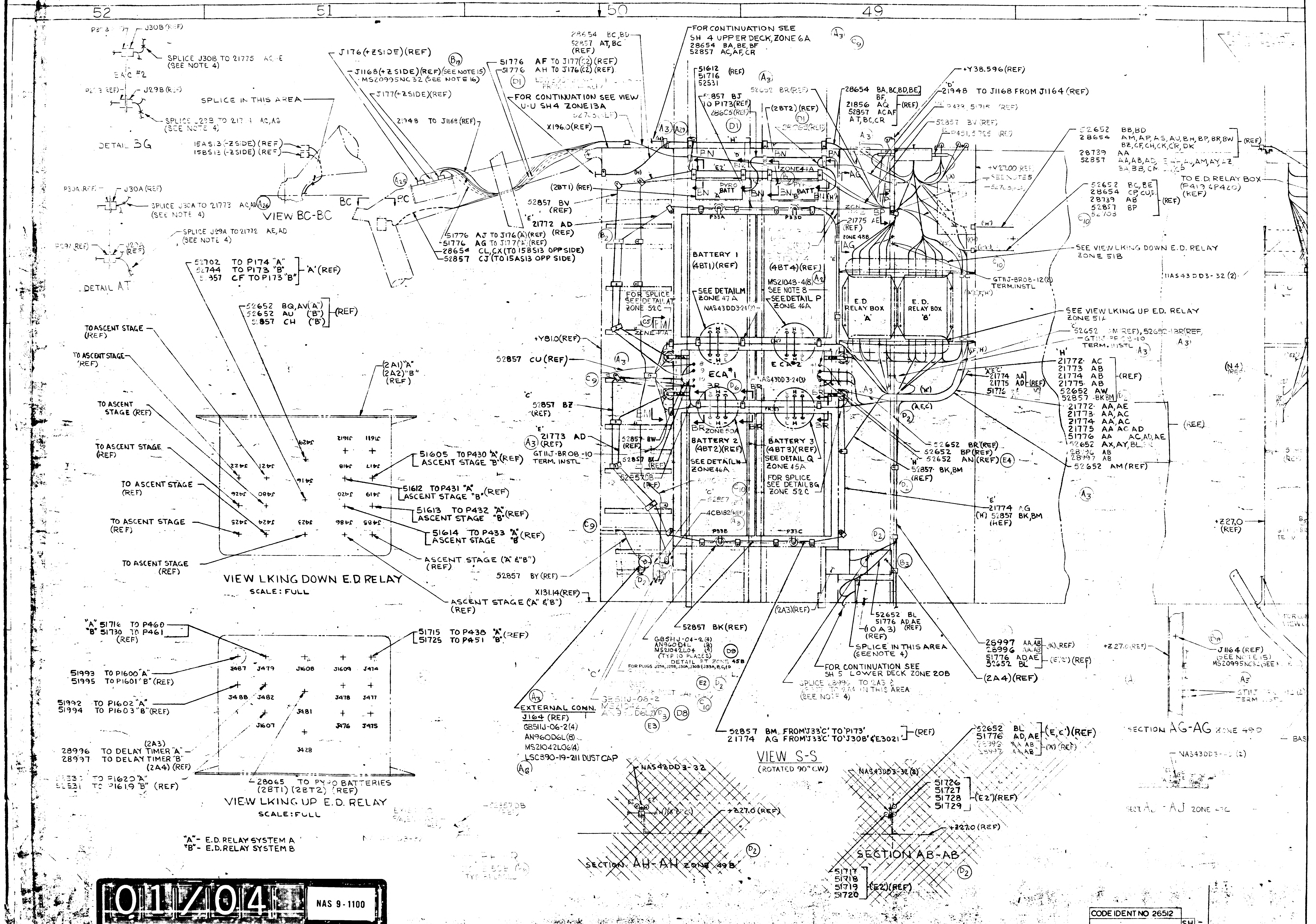
52
51
50
49
VIEW BC-BC
DETAIL 3G
DETAIL AT
SPLICE J30B TO 21775 AC,AE (SEE NOTE 4)
SPLICE J29B TO 21773 AC,AG (SEE NOTE 4)
SPLICE J30A TO 21773 AC,AD (SEE NOTE 4)
SPLICE J29A TO 21772 AE,AD (SEE NOTE 4)
SPLICE IN THIS AREA
15AS13 (-Z SIDE) (REF)
15BS13 (-Z SIDE) (REF)
J176 (+Z SIDE) (REF)
J1168 (+Z SIDE) (REF) (SEE NOTE 15)
MS20995NC32 (SEE NOTE 16)
J177 (-Z SIDE) (REF)
21948 TO J1168 (REF)
51776 AF TO J177 (C2) (REF)
51776 AH TO J176 (C2) (REF)
FOR CONTINUATION SEE VIEW U-U SH4 ZONE 13A
X196.0 (REF)
51776 AJ TO J176 (A) (REF)
51776 AG TO J177 (A) (REF)
28654 CL,CX (TO 15BS13 OPP SIDE)
52857 CJ (TO 15AS13 OPP SIDE)
(2BT1) (REF)
52857 BV (REF)
21772 AD (REF)
28654 BC,BD
52857 AT,BC (REF)
FOR CONTINUATION SEE SH 4 UPPER DECK, ZONE 6A
28654 BA,BE,BF
52857 AC,AF,CR
51612
51716 (REF)
52531
52857 BJ
10 P173 (REF)
(2BT2) (REF)
28654 BA,BC,BD,BE,BF
21856 AQ
52857 AC,AF,AT,BC,CR (REF)
+Y38.596 (REF)
21948 TO J1168 FROM J1164 (REF)
PYRO BATT
ZONE 41A
+Y27.00 (REF) SEE NOTE 5
BATTERY 1 (4BT1) (REF)
SEE DETAIL M ZONE 47A
NAS43DD3-24
(4BT4) (REF)
MS21043-4 (8)
SEE NOTE 8
SEE DETAIL P ZONE 46A
21775 AE (REF)
ZONE 48B
E.D. RELAY BOX 'A'
E.D. RELAY BOX 'B'
52652 BB,BD
28654 AM,AP,AS,AU,BH,BP,BR,BW,BZ,CF,CH,CK,CR,DK (REF)
28739 AA
52857 AA,AB,AD,AM,AY,BZ,BA,BB,CM
TO E.D. RELAY BOX (P419 & P420) (REF)
52652 BC,BE
28654 CP,CU
28739 AB (REF)
52857 BP
SEE VIEW LKING DOWN E.D. RELAY ZONE 51B
GT11J-BR08-12 (2) TERM. INSTL
11AS43DD3-32 (2)
SEE VIEW LKING UP E.D. RELAY ZONE 51A
52652 AM (REF), 52652 BR (REF)
GT11J-BR08-10 TERM. INSTL
FOR SPLICE SEE DETAIL AT ZONE 52C
+Y81.0 (REF)
52857 CU (REF)
ECA #1
ECA #2
NAS43DD3-24 (3)
52857 BZ (REF)
21773 AD (REF)
GT11J-BR08-10 TERM. INSTL
52857 BW
52857 BK
52857 DB (REF)
BATTERY 2 (4BT2) (REF)
SEE DETAIL N ZONE 46A
BATTERY 3 (4BT3) (REF)
SEE DETAIL Q ZONE 45A
FOR SPLICE SEE DETAIL BQ ZONE 52C
4CB182 (REF)
21772 AC
21773 AB
21774 AB (REF)
21775 AB
52652 AW
52857 BK,BM
21774 AA
21775 AD (REF)
51776
21772 AA,AE
21773 AA,AC
21774 AA,AC
21775 AA,AC,AD
51776 AA AC,AD,AE (REF)
52652 AX,AY,BL
28996 AB
28997 AB
52652 AM (REF)
52652 BR (REF)
52652 BP (REF)
52652 AN (REF)
52857 BK,BM (REF)
21774 AG
52857 BK,BM (REF)
+Z27.0 (REF)
52857 BY (REF)
X131.14 (REF)
52857 BK (REF)
(2A3) (REF)
52652 BL
51776 AD,AE (REF)
(10A3) (REF)
SPLICE IN THIS AREA (SEE NOTE 4)
FOR CONTINUATION SEE SH 5 LOWER DECK ZONE 20B
SPLICE 28996 TO 2A3 & 28997 TO 2A4 IN THIS AREA (SEE NOTE 4)
28997 AA,AB
28996 AA,AB
51776 AD,AE
52652 BL
(2A4) (REF)
GB51J-04-2 (4)
AN960D4L (8)
MS21042L04 (8) (TYP 10 PLACES)
DETAIL FT ZONE 45B
FOR PLUGS J29A, J29B, J30A, J30B & J33A, B, C, D
EXTERNAL CONN.
J164 (REF)
GB51J-06-2 (4)
AN960D6L (8)
MS21042L06 (4)
LSC390-19-211 DUST CAP
52857 BM FROM J33C TO P173
21774 AG FROM J33C TO J308 & E3021 (REF)
VIEW S-S (ROTATED 90° CW)
52652 BL
51776 AD,AE (E,C') (REF)
NAS43DD3-32
+Z27.0 (REF)
SECTION AH-AH ZONE 49B
NAS43DD3-32 (2)
51726
51727
51728 (E2') (REF)
51729
SECTION AB-AB
51717
51718
51719 (E2') (REF)
51720
SECTION AG-AG ZONE 49D
NAS43DD3-32 (2)
SECT AJ-AJ ZONE 47C
J1164 (REF) (SEE NOTE 15)
MS20995NC32 (SEE NOTE 16)
GT11J-BR08-12 (2) TERM. INSTL
+Z27.0 (REF)
(N4) (REF)
TO ASCENT STAGE (REF)
52702 TO P174 "A"
52744 TO P173 "B" 'A' (REF)
52857 CF TO P173 "B"
52652 BQ,AV ("A")
52652 AU ("B") (REF)
52857 CH ("B")
(2A1) "A"
(2A2) "B" (REF)
51605 TO P430 "A" ASCENT STAGE "B" (REF)
51612 TO P431 "A" ASCENT STAGE "B" (REF)
51613 TO P432 "A" ASCENT STAGE "B" (REF)
51614 TO P433 "A" ASCENT STAGE "B" (REF)
ASCENT STAGE ("A" & "B") (REF)
J422 J421 J429 J1612 J1611
J426 J480 J418 J417
J426 J480 J416 J420 J419
J425 J424 J423 J486 J485
VIEW LKING DOWN E.D RELAY
SCALE: FULL
"A" 51716 TO P460
"B" 51730 TO P461 (REF)
51715 TO P438 "A"
51725 TO P451 "B" (REF)
51993 TO P1600 "A"
51995 TO P1601 "B" (REF)
51992 TO P1602 "A"
51994 TO P1603 "B" (REF)
J487 J479 J1608 J1609 J414
J488 J482 J478 J477
J1607 J481 J476 J475
J428
28996 TO DELAY TIMER "A" (2A3)
28997 TO DELAY TIMER "B" (2A4) (REF)
51530 TO P1620 "A"
51531 TO P1619 "B" (REF)
28065 TO PYRO BATTERIES (2BT1) (2BT2) (REF)
VIEW LKING UP E.D. RELAY
SCALE: FULL
"A" - E.D. RELAY SYSTEM A
"B" - E.D. RELAY SYSTEM B

01/04 NAS 9-1100

CODE IDENT NO 26512

LDW280-52607 SH 7

48
47
46
45
44
FOR CONTINUATION SEE LDW280-52357 (REF)
+Z38.483 (REF)
+Z65.906 (REF)
LSC380-00602-07 (SEE NOTE 15)
MS20995NC32 (SEE NOTE 16)
FOR CONTINUATION SEE SH 4, UPPER DECK, ZONE 5B
NAS43DD3-32
28654 AG, BJ
52857 ED, BF, BG
(REF)
51613
51614 (REF)
P433 (REF)
+Z81.00 (REF)
X1960 (REF)
FOR CONTINUATION SEE SH 4 VIEW T-T ZONE 2B
TO E.D. RELAY BOX (P419 & P420) (REF)
NAS43DD3-32
GT11J-BR08-12 (2) TERM. INSTL
GT11J-BR08-12 (2) TERM. INSTL
VIEW LKING DOWN E.D. RELAY
VIEW LKING UP E.D. RELAY
NAS43DD3-32 (2)
AJ
AJ
52652 AT
52857 BH, BE, AN, AP, AU, AY
28654 AW, BG, BK
(REF)
52857 BR (REF)
52857 BU, CC, CD, CE (REF)
52652 BM (REF)
SPLICE 52857 BR TO 10A3 IN THIS AREA (SEE NOTE 4)
SPLICE 52652 BM TO 10A3 IN THIS AREA (SEE NOTE 4)
+Z27.0 (REF)
GT11J-BR08-10 TERM. INSTL
21543 (D) TO P1149 (REF)
(2316) (REF) FOR CONTINUATION SEE SH 4 VIEW T-T ZONE 2B, VIEW U-U, ZONE 13 A, VIEW V-V, ZONE 11 B, VIEW W-W, ZONE 13 C (REF)
FOR CONTINUATION SEE VIEW G-G, ZONE 42 B
FOR CONTINUATION SEE SH 5, LOWER DECK ZONE 19B
FOR CONTINUATION SEE SH 4, VIEW T-T, ZONE 2B
+Z27.0 (REF)
J184 (REF) (SEE NOTE 15)
MS20995NC32 (SEE NOTE 16)
GT11J-BR08-12 (2) TERM. INSTL
SECTION AG-AG ZONE 49D
BASE HEAT SHIELD (REF)
VIEW R-R
NAS43DD3-40 (2)
SECTION AJ-AJ ZONE 47C
20A111 (REF)
20A119 (REF)
+Z27.0 (REF)
LOWER ENGINE STRUT (REF)
510787-001 (REF)
LSC360-603-301 (REF)
TO 20TC124 & 20TC132 (REF)
+Y27.0 (REF)
GIMBAL RING (REF)
GC500S-28W (2)
GC500S-3 (2)
GB511J-08-2 (2)
AN960D8L (4)
MS21042L08 (2)
ENGINE (REF)
DETAIL BH 42B
J33A (REF)
J33D (REF)
J29A (REF)
J30A (REF)
KEYWAY POSITION
KEYWAY POSITION
J30B (REF)
J29B (REF)
KEYWAY POSITION
J33B (REF)
J33C (REF)
DETAIL BT
ZONE 50A
SPLICE 52857 AY TO 20RT BTN THIS AREA (SEE NOTE 4)
(1A7) (REF)
1716B ACTUATOR (REF)
(20RT 31) (REF)
510787-001 FROM 20TC12 H (REF)
LSC361-60_-301 FROM
Y27.0 (REF)
COLOR-GREY (SEE NOTE 20)
COLOR-YELLOW (SEE NOTE 20)
COLOR-WHITE (SEE NOTE 20)
COLOR RED (SEE NOTE 20)
COLOR-BLACK (SEE NOTE 20)
COLOR-BLACK/GREY (SEE NOTE 20)
COLOR-BLK/YEL (SEE NOTE 20)
COLOR-RED/WHT (SEE NOTE 20)
COLOR-BLK/WHT (SEE NOTE 20)
COLOR-BLK/RED (SEE NOTE 20)
1381
1566
1382
1567
1380
1383
1388
1384
1385
1386
VIEW BV-BV ZONE 42B
C, H (REF)
A3 (REF)
SECTION BP-BP ZONE 49C
FOR CONTINUATION SEE SH 5 LOWER DECK
21955 (REF)
21644 (REF)
21641 (REF)
21642 (REF)
21963 (REF)
21965 (REF)
21643 (REF)
21961 (REF)
BATT 1
ECA 1
BATT 4
ECA 2
BATT 2
BATT 3
DETAIL M ZONE 50B SCALE: NONE
DETAIL N ZONE 50B SCALE: NONE
DETAIL P ZONE 49B SCALE: NONE
DETAIL Q ZONE 49B SCALE: NONE
NAS43DD3-48
A3
E2
C
SECTION BN-BN ZONE 49C
43

02/04 NAS 9-1100

CODE IDENT NO. 26512
LDW280-52607
SH 7

43
42
41
40
39
+Z27.0 (REF)
ENGINE STRUT (REF)
Y27.0 (REF)
28654 CU
28739 AB
52857 BP
52703 C10
TO ENGINE ALONG STRUT FROM P172, P173 (REF)
28654 AU, BH, BP, BR, BW
28739 AA
TO ENGINE ALONG STRUT FROM P172, P173 (REF)
28654 CK TO ENGINE STRUT FROM P172 TO 20MT65 (REF) (20TB22)
52652 BB
28654 AS, CH, DK
52857 BA, AZ
(REF)
28654 CH (REF) TO ENGINE STRUT
52652 BD
28654 AM, AP, BZ, CF, CR
52857 AA, AB, AD, AE, AH, AJ, AM, BB, CM, CN, CP
(REF)
NAS43DD3-32 (2)
+Z27.0 (REF)
X196.0 (REF)
±Z0.0 (REF)
(10MT-13) (REF)
-Z27.0 (REF)
X196.0 (REF)
+Y27.0 (REF)
SPLICE 28654 AS TO 10MT-13 IN THIS AREA (SEE NOTE 4)
FOR CONTINUATION SEE SH 4, UPPER DECK, ZONE 7B
FOR CONTINUATION SEE SH 6, VIEW D-D, ZONE 30C
FOR CONTINUATION SEE SH 7 VIEW R-R ZONE
52857 AY (REF)
52857 AA TO P1566
AB P1567
AD P1382
AE P1383
AH P1388
AJ P1380
AM P1381
CM P1384
CN P1385
CP P1386
(REF)
SPLICE 52857 AY TO 20RT-BTTN THIS AREA (SEE NOTE 4)
(1A7) (REF)
J716B ACTUATOR (REF)
NAS43DD3-32
P1380 (REF) (20A113)
P1383 (REF) (20A115)
P1388 (REF) (20A112)
P1384 (REF) (20A116)
LOWER ENGINE STRUT (REF)
ZONE 45A
BV
FOR CONTINUATION SEE DETAIL BH 44C
(20RT-31) (REF)
P1381 (REF) (20A111)
P1386 (REF) (20A118)
P1385 (REF) (20A117)
BJ 43A
P1567 (REF) (20A120)
NAS43DD3-32
510787-001 FROM 20TC124 (REF)
STRUCTURAL BOND SEE NOTE 5
LSC360-603-301 FROM 20TC132 (REF)
P1382 (REF) (20A114)
+Y27.0 (REF)
X131.14 (REF)
+Z27.0 (REF)
-Y27.0 (REF)
±Y0.0 (REF)
P1566 (REF) (20A119)
FOR CONTINUATION SEE SH LOWER DECK
FROM 20TC125 TO 20A112 (510787-001)
20TC126 20A113 (510787-002)
20TC127 20A114 (510787-001)
20TC128 20A115 (510787-001)
20TC129 20A116 (510787-001)
20TC130 20A117 (510787-001)
20TC131 20A118 (LSC360-603-209)
FROM 20TC133 TO 20A120 (LSC360-603-301)
(REF)
EXISTING PIPE
+Z27.0 (REF)
BASE HEAT SHIELD (REF)
SECT. BJ-BJ 42B
VIEW G-G
(ROTATED 90° CCW)
NAS43DD3-32 (2)
52652 AK (REF)
52972 AA (REF)
28654 DK (REF)
SPLICE 52652 BB TO 10MT16 AND 52857 AZ TO 20RT-32 IN THIS AREA (SEE NOTE 4)
28654 DJ (REF)
(1A6) P716A (REF)
52652 BB
52857 AZ
(REF)
J716A ACTUATOR (REF)
P119 (10MT-23) (REF)
(20RT-32) (REF)
(10MT-16) (REF)
SPLICE 52652 BC TO 10MT16 IN THIS AREA (SEE NOTE 4)
52652 BC, BE
28654 CP, DJ
(REF)
X131.14 (REF)
VIEW K-K
(ROTATED 180°)
GC500S-4W
GC500S-2
GB511-C3-2
AN960D8L (2)
MS21042-08
28654 CH TO ENGINE STRUT FROM P172 TO 20MT-68 (20TB25) (REF)
52857 BA (REF)
52652 AG, AJ (REF)
52652 AF, AH (REF)
±Y0.0 (REF)
-Y27.0 (REF)
X196.0
SPLICE 52857 BA TO 20RT-33 IN THIS AREA (SEE NOTE 4)
52652 AJ (REF)
10MT-1 (REF)
52652 AH (REF)
J716A
52652 AF, AG (REF) FROM P737
52652 BE
28654 CP
(REF)
(20RT-33) (REF)
X131.14
VIEW J-J
(ROTATED 90° CW)
BATTERY (TYP)
ECA (TYP)
BATTERY (TYP)
SECT BM-BM C5 D5 E5
ZONE 50B

CODE IDENT NO. 26512
LDW280-52607
SH 7

03/04 NAS 9-1100

CODE IDENT NO. 26512
LDW280-52607
SH 7

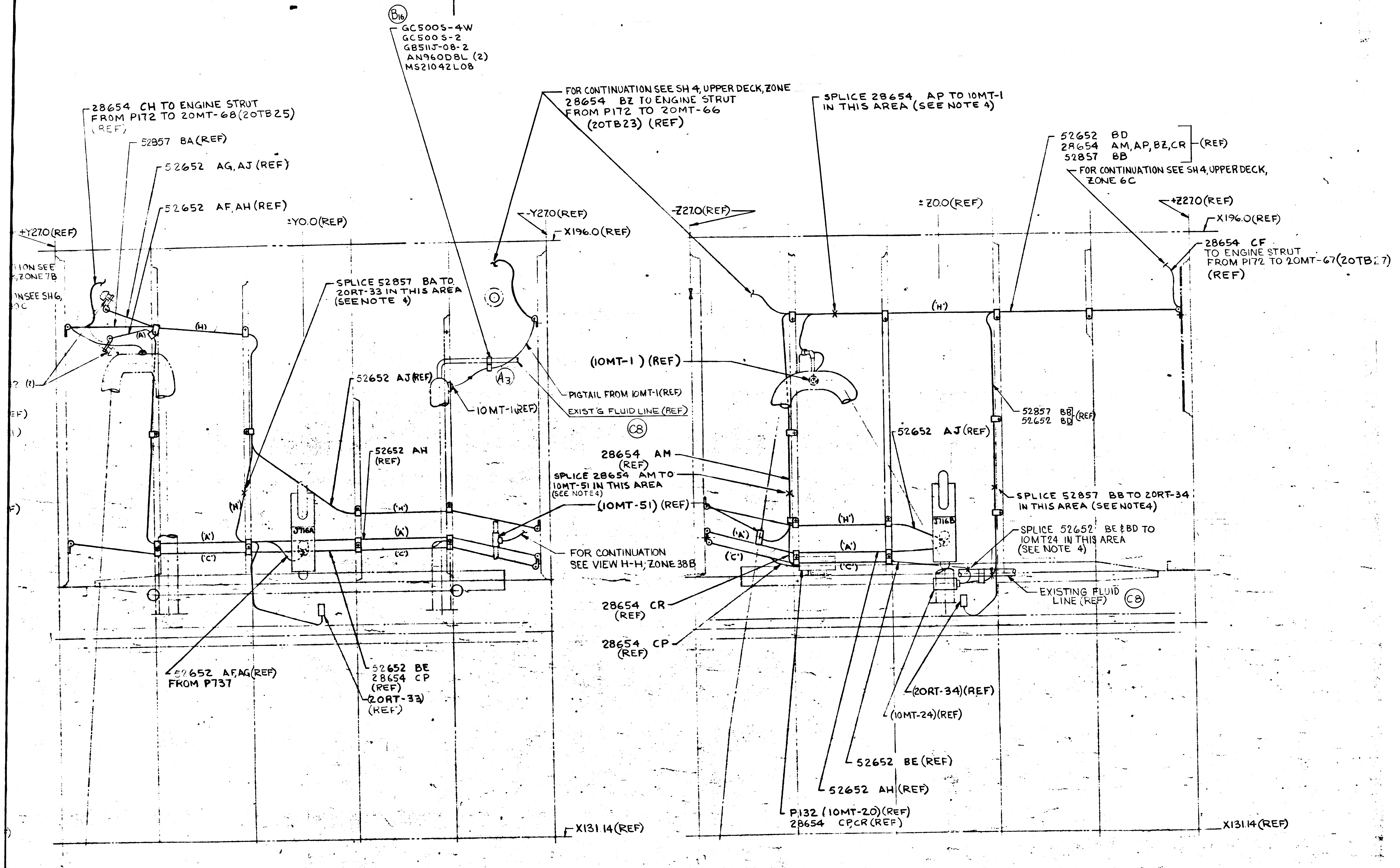

(B16)
GC500S-4W
GC500S-2
GB511J-08-2
AN960D8L (2)
MS21042L08
28654 CH TO ENGINE STRUT FROM P172 TO 20MT-68(20TB25) (REF)
52857 BA(REF)
52652 AG, AJ (REF)
52652 AF, AH (REF)
+Y27.0(REF)
±Y0.0(REF)
-Y27.0(REF)
X196.0(REF)
SPLICE 52857 BA TO 20RT-33 IN THIS AREA (SEE NOTE 4)
(H)
(A)
(2)
52652 AJ(REF)
10MT-1(REF)
(A3)
PIGTAIL FROM 10MT-1(REF)
EXIST'G FLUID LINE (REF)
(C8)
52652 AH (REF)
('H')
('A')
('C')
J716A
FOR CONTINUATION SEE VIEW H-H, ZONE 38B
52652 AF,AG(REF) FROM P737
52652 BE
28654 CP
(REF)
20RT-33)
(REF)
X131.14(REF)
FOR CONTINUATION SEE SH 4, UPPER DECK, ZONE
28654 BZ TO ENGINE STRUT FROM P172 TO 20MT-66 (20TB23) (REF)
-Z27.0(REF)
SPLICE 28654 AP TO 10MT-1 IN THIS AREA (SEE NOTE 4)
±Z0.0(REF)
52652 BD
28654 AM, AP, BZ, CR
52857 BB
(REF)
FOR CONTINUATION SEE SH 4, UPPER DECK, ZONE 6C
+Z27.0(REF)
X196.0(REF)
28654 CF TO ENGINE STRUT FROM P172 TO 20MT-67(20TB27) (REF)
('H')
(10MT-1) (REF)
52857 BB
52652 BD
(REF)
52652 AJ(REF)
28654 AM (REF)
SPLICE 28654 AM TO 10MT-51 IN THIS AREA (SEE NOTE 4)
(10MT-51) (REF)
SPLICE 52857 BB TO 20RT-34 IN THIS AREA (SEE NOTE4)
J716B
SPLICE 52652 BE & BD TO 10MT24 IN THIS AREA (SEE NOTE 4)
EXISTING FLUID LINE (REF)
(C8)
28654 CR (REF)
28654 CP (REF)
(20RT-34)(REF)
(10MT-24)(REF)
52652 BE (REF)
52652 AH (REF)
P132 (10MT-20)(REF)
28654 CP,CR (REF)
X131.14(REF)

VIEW J-J
(ROTATED 90° CW)

VIEW H-H

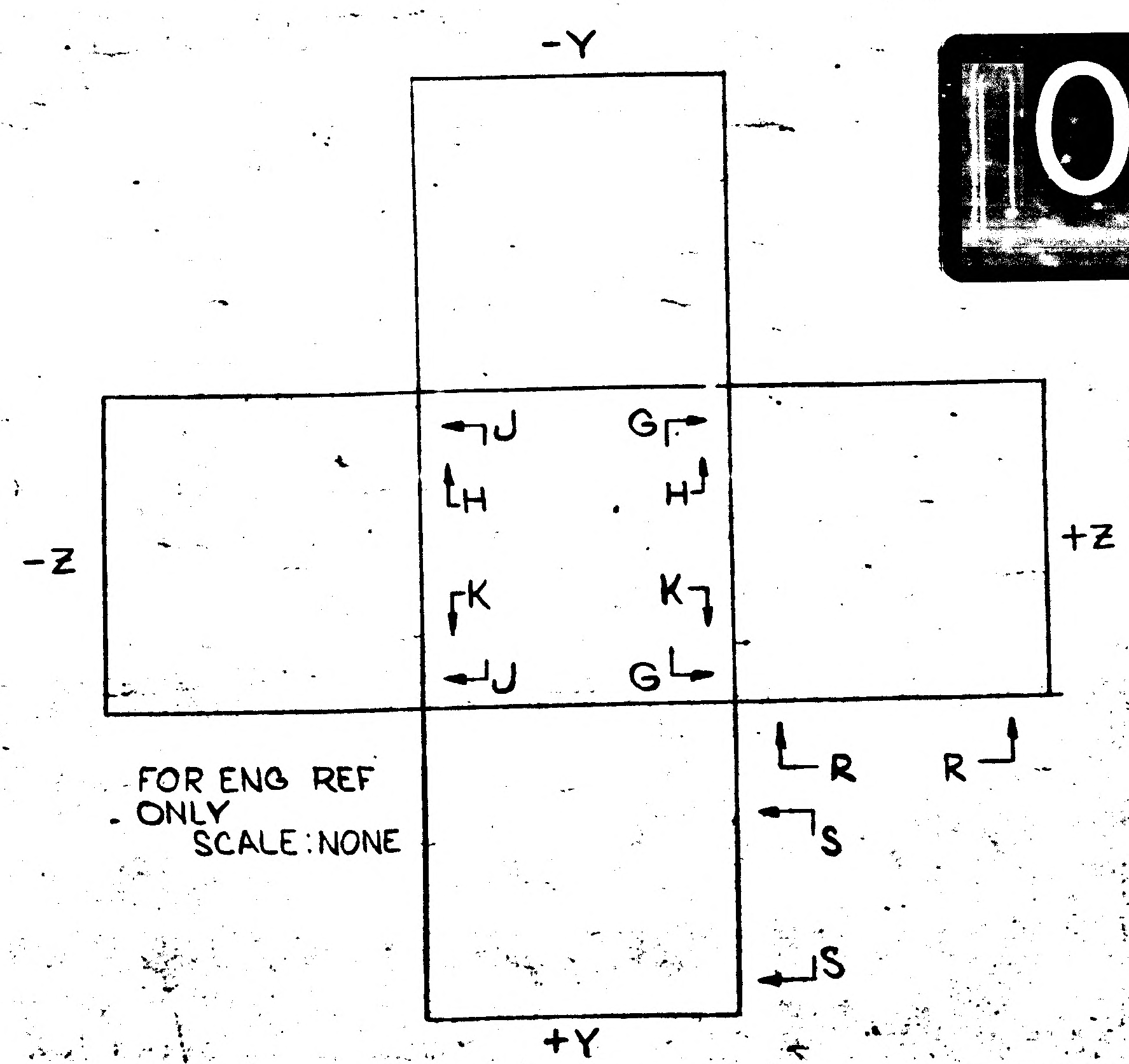

-Y
+Y
-Z
+Z
J
G
H
H
K
K
J
G
R
R
S
S

FOR ENG REF ONLY
SCALE: NONE

04/04 NAS 9-1100

MANUFACTURING OPERATIONS
UNLESS OTHERWISE SPECIFIED
NOTES CHECKED √ APPLY TO THIS DWG.

PART NUMBER AND ALL OTHER MARKINGS IN REGION MARKED USE BOTH SIDES IF NECESSARY.

FILLET AND INSIDE CORNER RADII TOLERANCES
.016R TO .062R ± .010
.063R TO .250R ± .015
OVER .250R ± .030

DEPTH SHOWN FOR TAPPED HOLES IS FULL THDS. 2-3 IMP THDS. BEYOND PERMISSIBLE.

EXTERNAL THREAD LENGTH SHOWN INCLUDES 2 IMPERFECT THREADS MAX.

DO NOT CADMIUM PLATE & PAINT HOLES OR SURFACES MARKED WITH DOUBLE ASTERISK.

MISMATCH STEP OF ± .005 PERMISSIBLE DUE TO CHANGE OF CUTTERS AT INSIDE INTERSECTING SURFACES.

DIAMETERS MARKED MUST BE CONCENTRIC WITHIN FULL INDICATOR READING

HOLES MUST BE KEPT FREE OF CHROME PLATING SOLUTION.

ALL DIMENSIONS SHOWN TO BE MET AFTER CADMIUM PLATING. THICKNESS OF PLATE .0003 MIN. TO .0005 MAX. MIN. THICKNESS TO BE .0002 ON THREADED AREAS. NO ALLOWANCE FOR PLATING IN HOLES

125 SURFACE ROUGHNESS INCLUDING REAMED HOLES PER MIL-STD-10

200 FOR ALL DRILLED HOLES

REMOVE ALL BURRS. BREAK ALL EDGES .015-.031

INSPECTION INFORMATION MINIMUM PERMISSIBLE AVERAGE EDGE DISTANCE MARKED IS

SYMBOL √ DENOTES SURFACE TO BE MACHINED

UNLESS OTHERWISE SPECIFIED TOLERANCE ON FLANGES IS ± 1/32

LENGTHS OF AN, NAS & MS AL ALY RIVETS SHORTER THAN 1 INCH ARE NOT SPECIFIED.

TOLERANCE ON LOFTED DELINEATIONS IS

DWG SIZE 34 X

PRINTING INFO ONLY
FULL SIZE SHEET AREA (36 X) = 43.0 SQ. FT.
1/2 SIZE SHEET AREA (1/4 OF FULL) = 10.5 SQ. FT.

PRINT TRIM LINE

LDW280-52607E

LDW280-52607E

	GRUMMAN AIRCRAFT ENGRG CORP., BETHPAGE, L. I., NEW YORK			
	SIZE J	CODE IDENT NO. 26512	LDW280-52607	E
LM MODEL OR END ITEM	SCALE 1		SHEET 7	

CODE IDENT NO 26512	
LDW280 52607	SH 7

ENG 32.1 REV 3-65

GRUMMAN AIRCRAFT ENGINEERING CORP.
CODE IDENT NO. 26512
ENGINEERING ORDER

DWG. NO. LEO 280
EO NO. 377
CONTROL INFO NO. LDW 280A - 3703

TO THE FOLLOWING INSTALLATIONS ADD NOTE * (* USE NEXT AVAIL NO)

DWG NO.	CHANGE No
LDW280-28357 ✓	A2
LDW 280-28360 ✓	A1
LDW280-51357 ✓	A4
LDW280-51358 ✓	A1
LDW280-51359 ✓	A1
LDW280-51360 ✓	A2
LDW280-51607 ✓	A5

DWG NO.	CHANGE. NO.
LDW280-52357 ✓	B3
LDW280-52358 ✓	A2
LDW280-52359 ✓	A4
LDW280-52360 ✓	A3
LDW280-52607 ✓	A1
LDW280-53357	A1
LDW280-53358	A1
LDW280-53359	A1
LDW280-53360	A1

* MS21919WDH CLAMPS & GC500S CLAMPS ARE INTERCHANGEABLE & EITHER MAY BE USED IN THIS INSTL.

DETAIL SPEC REQ ☐ CL II ENGRG CHG ☐ CL I ENGRG CHG ☐

REASON FOR EO: TO ALLOW MANUFACTURING TO SWITCH OVER TO THE REVISED ELECTRONIC CLAMP.

DESCRIPTION OF EO: TO SH 3 ADDED NOTE *

GAEC EO RELEASE: FR 12/2

MODEL	PROCURING ACTIVITY NO.	GAEC UNIT NO.	SUB CONTR UNIT NO.
LM		LTA-8 (18)	LM-3 (33)
		LM-1 (31)	
		LM-2 (32)	

DRAWING CHANGE REQD: REVISE DWG	RECORD EO	DISPOSITION OF PARTS: REWORK	SCRAP
✓		NOT	REQD

		SUPPORT	RELIAB. GROUP	GROUP LEADER	STRESS GROUP	LIAISON ENGRG	PROJ ENGRG	GOVT
APPROVED BY		—	—	—				
DATE	11/22/6						11-29-66	11-29-66
1	VD1							

PRIORITY: C
DRAWING TITLE: LINES INSTL. - ELEC.
DRAWING NO.: LEO 280
EO NO.: 377

ISSUED BY C.H. COHEN X7033 SECTION EQUIP LINES GROUP NO. 332 PL 35

01

NAS 9-1100

B

ENG 32.2 REV 3-65

GRUMMAN AIRCRAFT ENGINEERING CORP.
CODE IDENT NO. 26512
ENGINEERING ORDER

DWG NO. LDW280-52607	EO NO. A2
CONTROL INFO NO. LDW280A4768	

IN B/M: (ADD) 12 (REQD) GN511L-0420 (P/N) E (I&T) NUT (NOMEN) GRUMMAN STD (MATL)

MS21043-4 NUT 20 REQD (WAS) 32 REQD

IN NOTES:

9. FOR BATTERIES NO. 1, 2, 3 & 4 TORQUE GN511L-0420 NUTS TO 20±5 INCH POUNDS.

(WAS)

9. FOR BATTERIES NO. 1, 2, 3 & 4 TORQUE MS21043-4 NUTS TO 20±5 INCH POUNDS.

IN F/D
ON SH 7, ZONES 45A, 46A, 47A

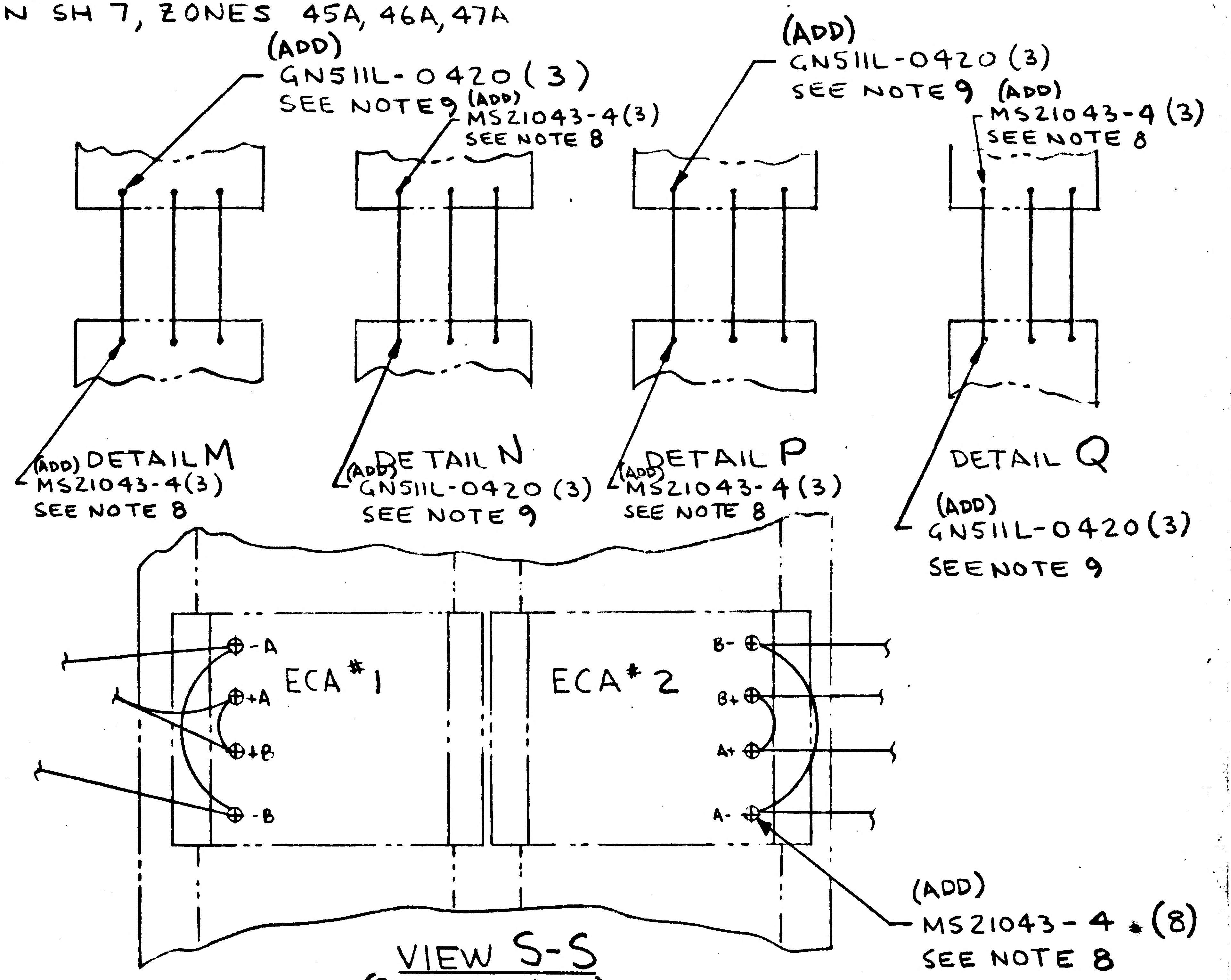
(ADD)
GN511L-0420 (3)
SEE NOTE 9
(ADD)
MS21043-4(3)
SEE NOTE 8
(ADD)
GN511L-0420 (3)
SEE NOTE 9
(ADD)
MS21043-4 (3)
SEE NOTE 8
(ADD) DETAIL M
MS21043-4(3)
SEE NOTE 8
(ADD) DETAIL N
GN511L-0420 (3)
SEE NOTE 9
(ADD) DETAIL P
MS21043-4 (3)
SEE NOTE 8
DETAIL Q
(ADD)
GN511L-0420 (3)
SEE NOTE 9
-A
+A
+B
-B
ECA #1
ECA #2
B-
B+
A+
A-
(ADD)
MS21043-4 (8)
SEE NOTE 8

VIEW S-S
(ROTATED 90° CW)

LDW280-52607-1 INSTL

5

DETAIL SPEC REQ		CL II ENGRG CHG	✓	CL I ENGRG CHG									
REASON FOR EO: BATTERY TERMINAL STUDS HAVE NON-STANDARD THREADS					DESCRIPTION OF EO: IN F/D ADDED GN511L-0420 (12), MS21043-4(20), IN B/M ADD GN511L-0420, MS21043-4(20) WAS(32), REVISED NOTE 9 TORQUE GN511L-0420 NUTS (WAS) TORQUE MS21043-4 NUTS							GAEC EO RELEASE	1/17/67
MODEL	EFFECTIVITY				DRAWING CHANGE REQD		DISPOSITION OF PARTS		APPROVED BY	JW	—	—	—
	PROCURING ACTIVITY NO.	GAEC UNIT NO.	SUB CONTR UNIT NO.		✓ REVISE DWG	RECORD EO	✓ REWORK	SCRAP	DATE	1/10/67			
LM		LM-2 (32)							1	VDI	SUPPORT	RELIAB GROUP	GROUP LEADER
					PRIORITY: C	DRAWING TITLE: LINES INSTALLATION ELECTRONIC DESCENT STAGE					DRAWING NO.: LDW280-52607		EO NO.: A2

APPROVED BY	1/10/67 (STRESS GROUP)
	(LIAISON ENGRG)
	1-10-67 (PROJ ENGRG)

ISSUED BY R. EBERLE X:441 SECTION EQUIP LINES (VDI) GROUP NO. 332 PL 5

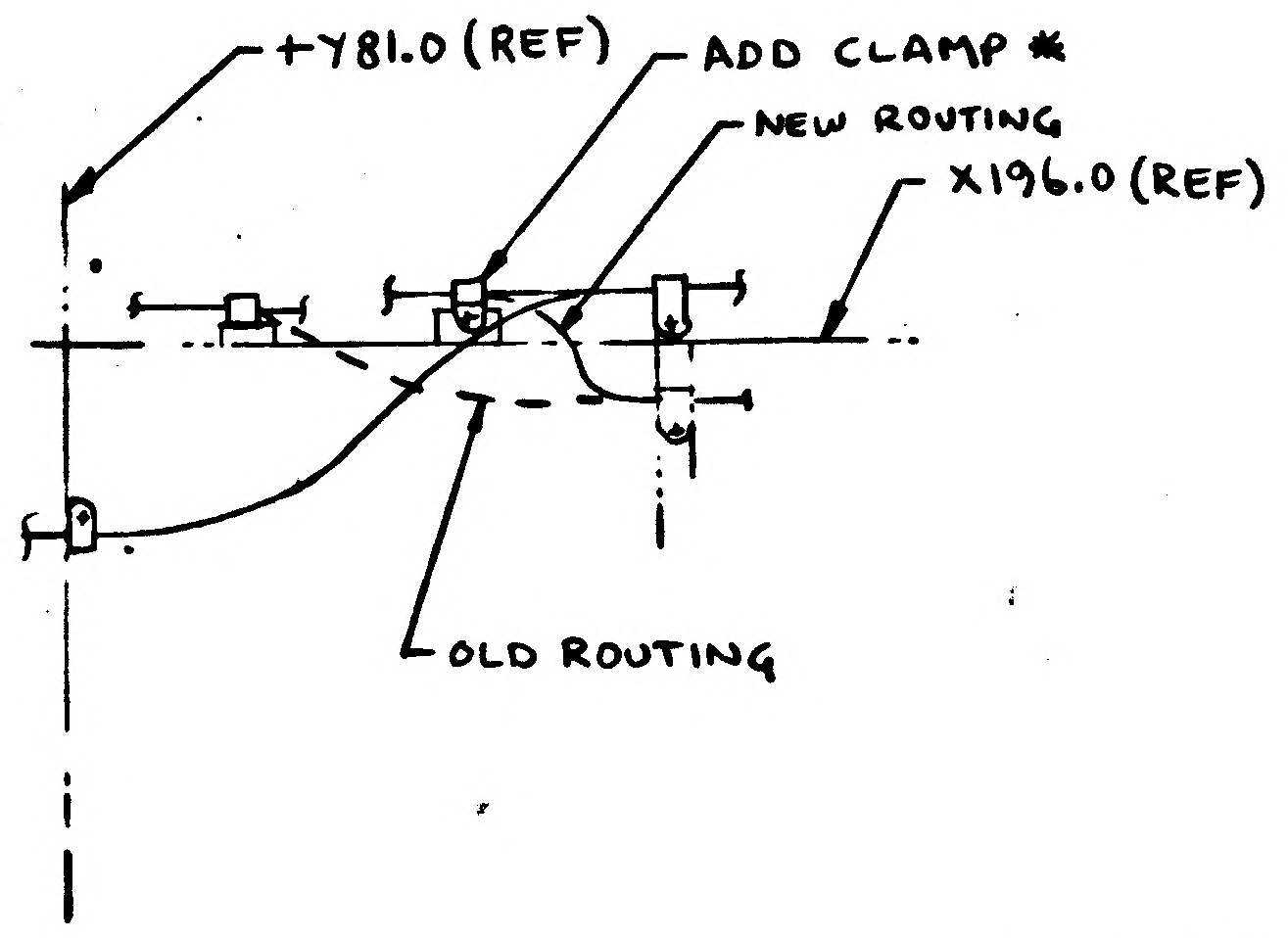
+Y81.0 (REF)
ADD CLAMP *
NEW ROUTING
X196.0 (REF)
OLD ROUTING

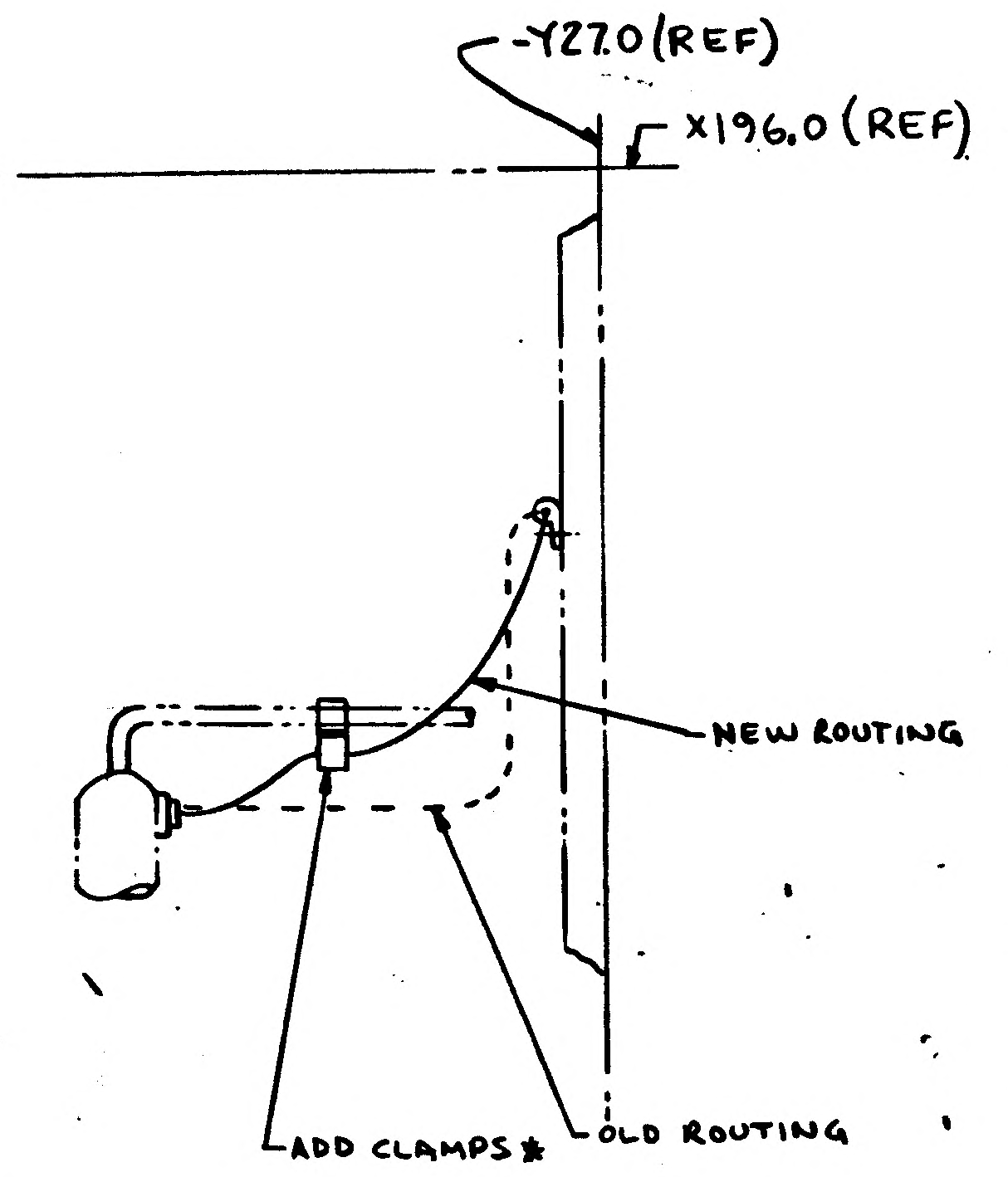
-Y27.0 (REF)
X196.0 (REF)
NEW ROUTING
ADD CLAMPS *
OLD ROUTING

VIEW J-J
(ROTATED 90° CW)

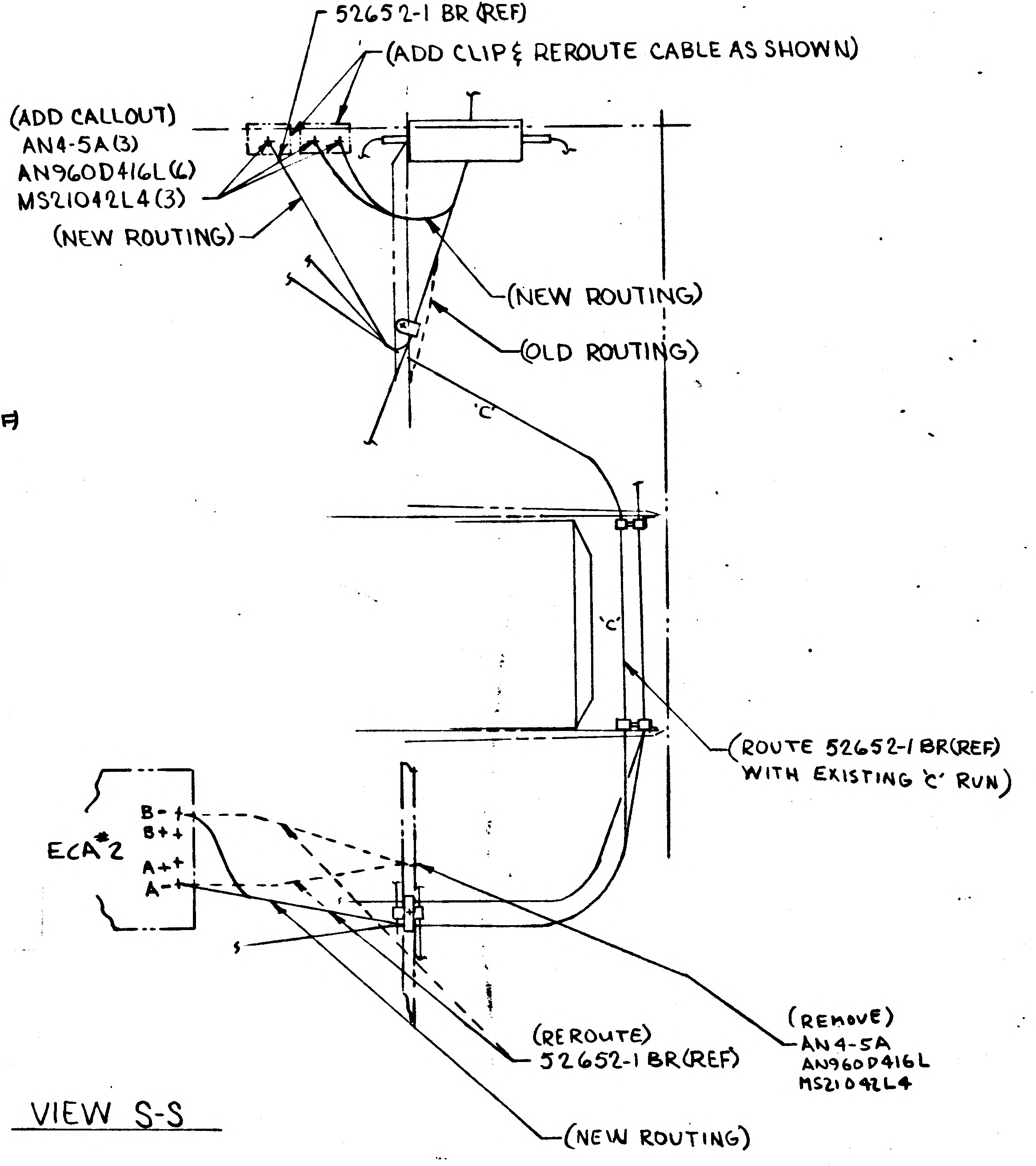
(ADD CALLOUT)
52652-1 BR (REF)
(ADD CLIP & REROUTE CABLE AS SHOWN)
(ADD CALLOUT)
AN4-5A (3)
AN960D416L (6)
MS21042L4 (3)
(NEW ROUTING)
(NEW ROUTING)
(OLD ROUTING)
'C'
'C'
(ROUTE 52652-1 BR (REF)
WITH EXISTING 'C' RUN)
ECA *2
B-
B+
A+
A-
(REROUTE)
52652-1 BR (REF)
(REMOVE)
AN4-5A
AN960D416L
MS21042L4
(NEW ROUTING)

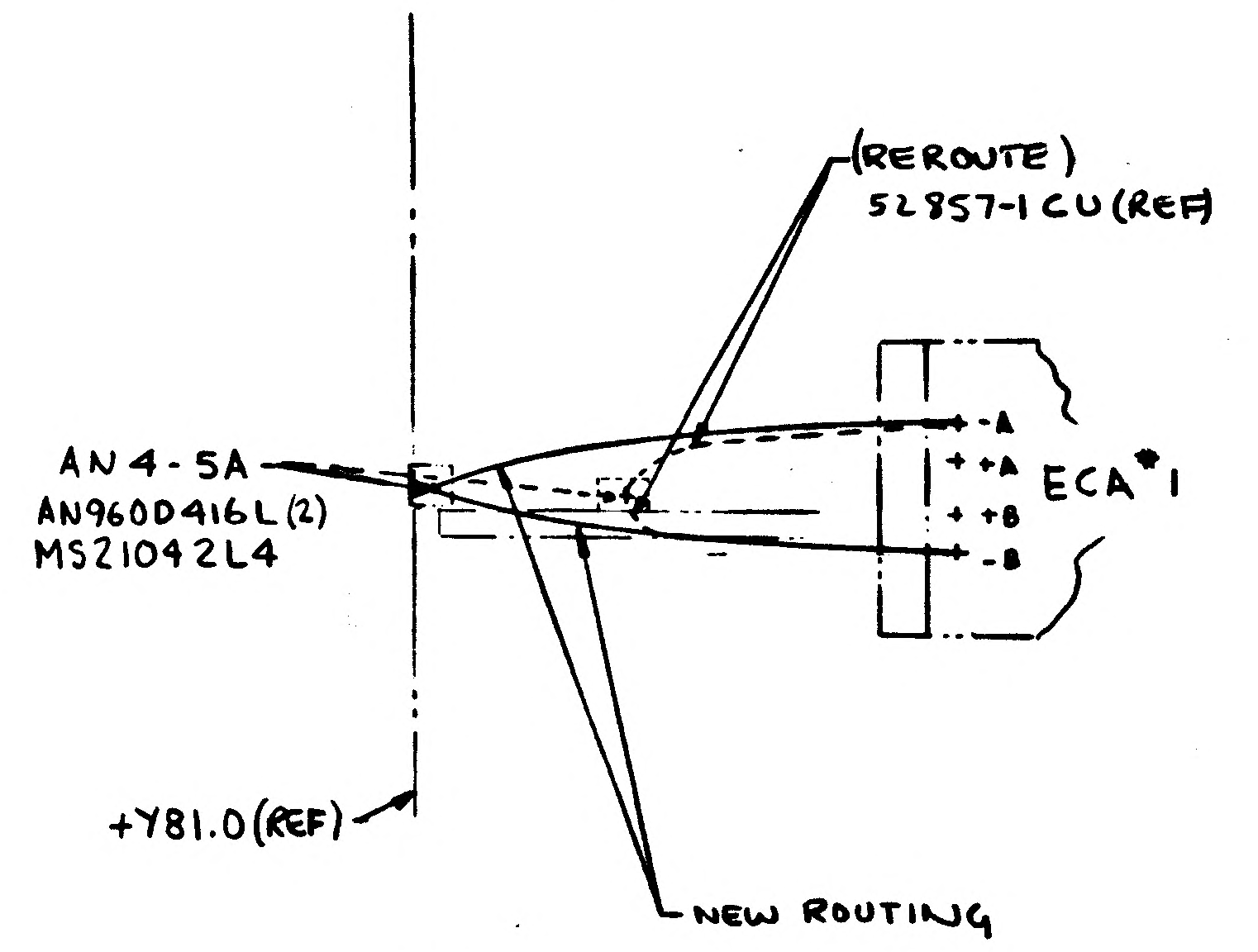
(REROUTE)
52857-1 CU (REF)
AN4-5A
AN960D416L (2)
MS21042L4
-A
+A
+B
-B
ECA *1
+Y81.0 (REF)
NEW ROUTING

VIEW S-S

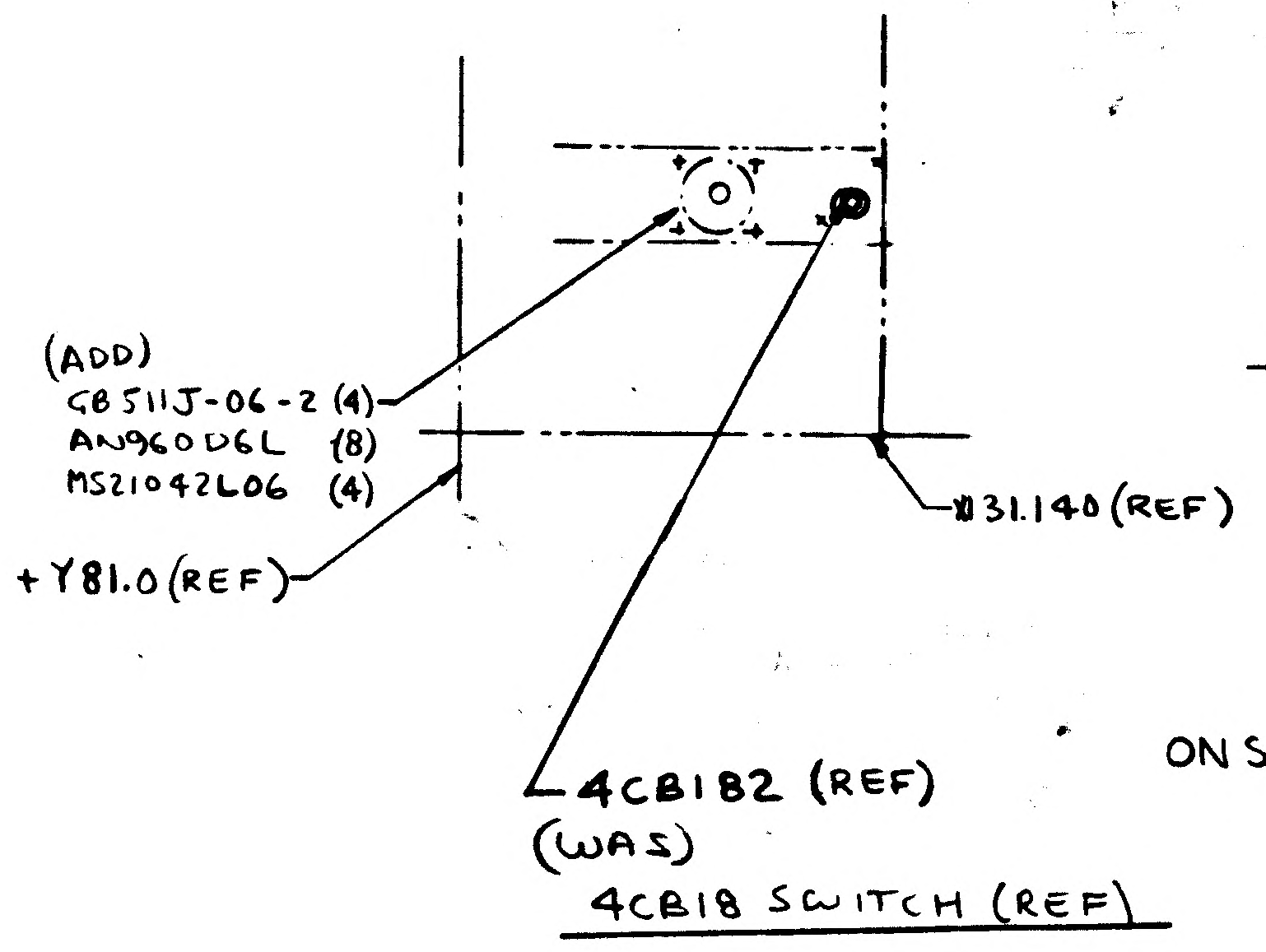
(ADD)
CB511J-06-2 (4)
AN960D6L (8)
MS21042L06 (4)
+Y81.0 (REF)
Ø31.140 (REF)
4CB182 (REF)
(WAS)
4CB18 SWITCH (REF)

ON SHT 7 SECT. AG-AG REMOVE CALLOUT AN4-5A (2)
AN960D416L (4)
MS21042L4 (2)

SHEET 7

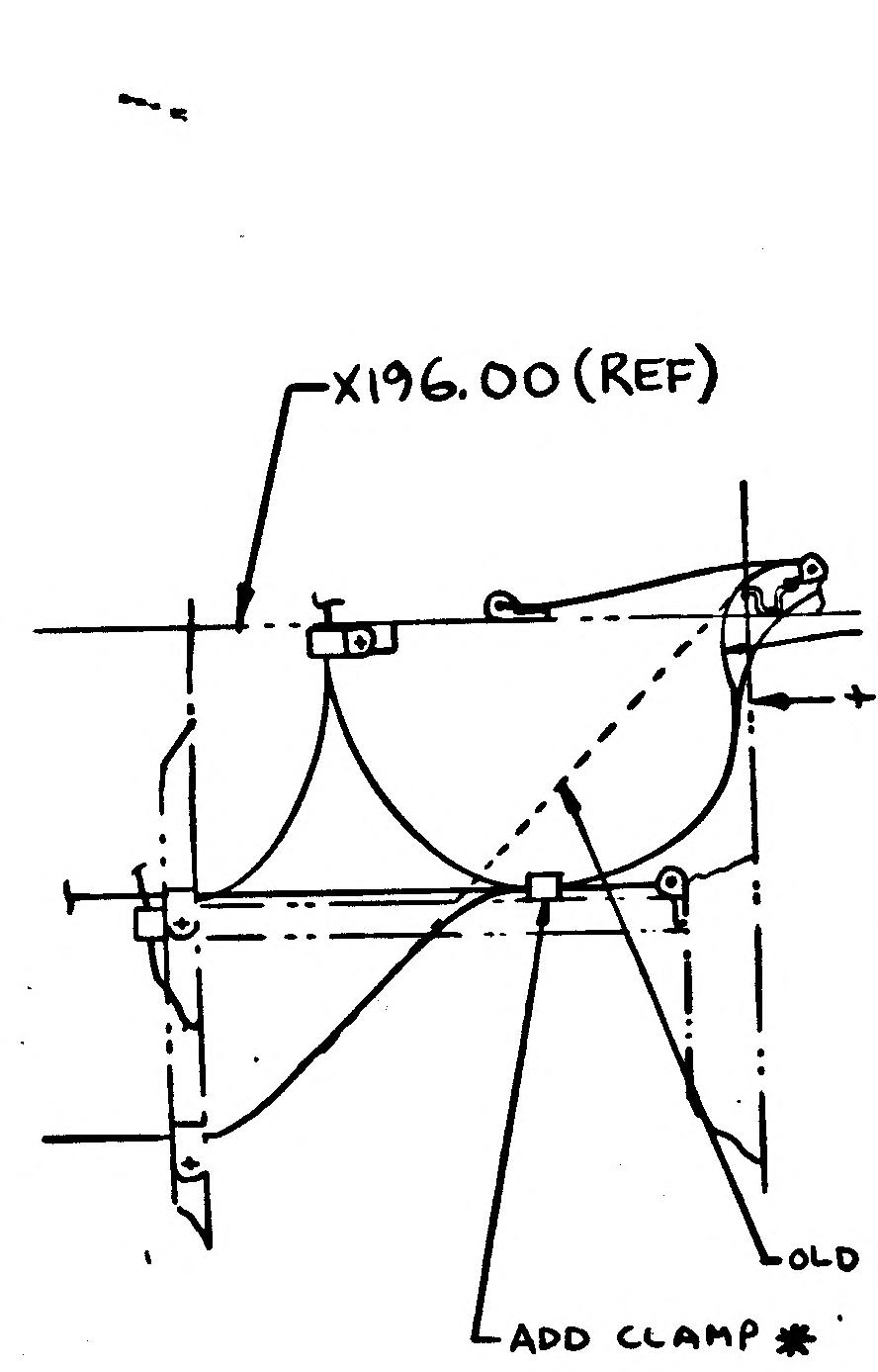
X196.00 (REF)
NEW ROUTING
+Z27.00 (REF)
OLD ROUTING
ADD CLAMP *

VIEW B-B
(ROTATED 180°)

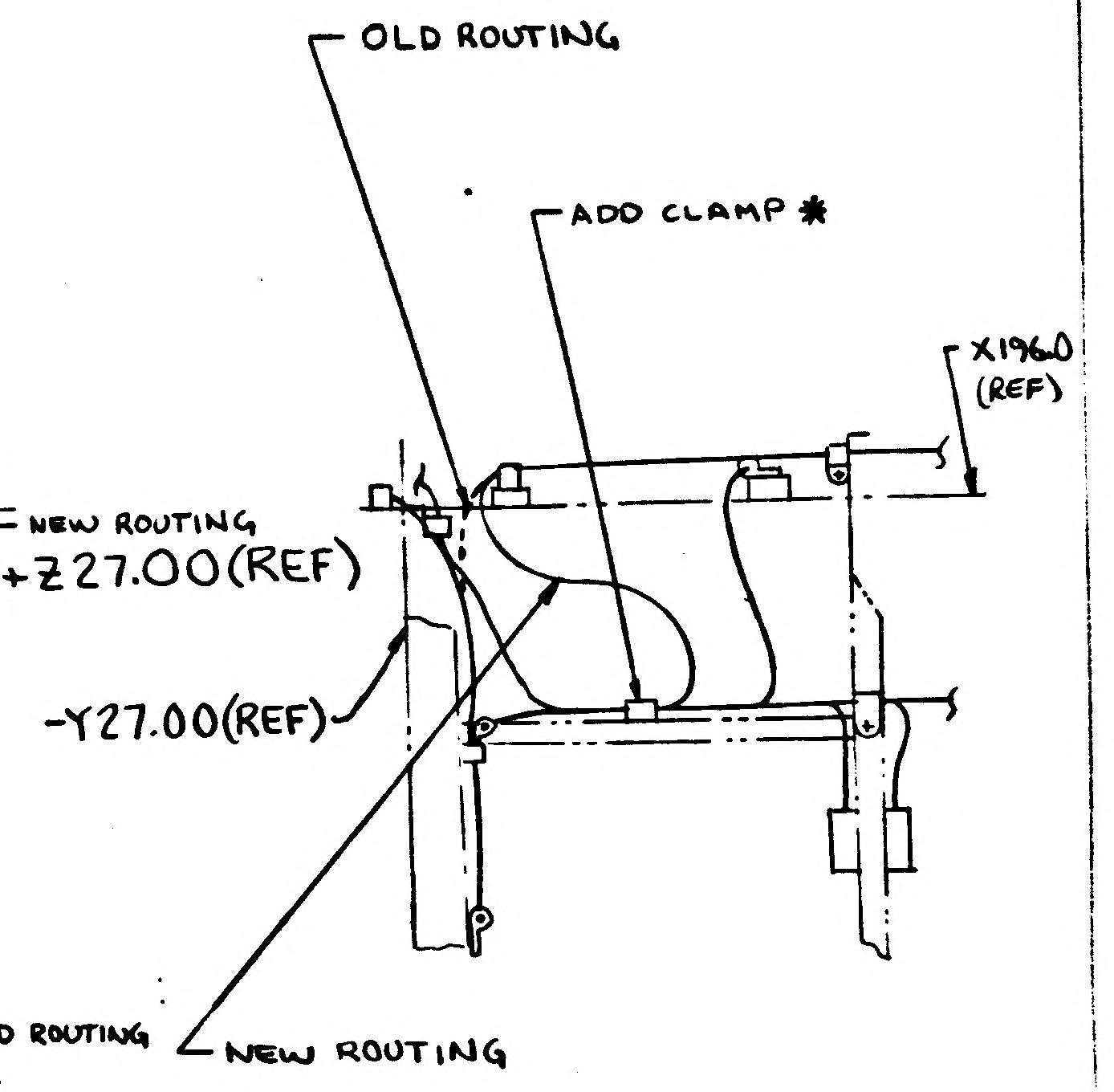
OLD ROUTING
ADD CLAMP *
X196.0 (REF)
-Y27.00 (REF)
NEW ROUTING

VIEW A-A
(ROTATED 90° CW)

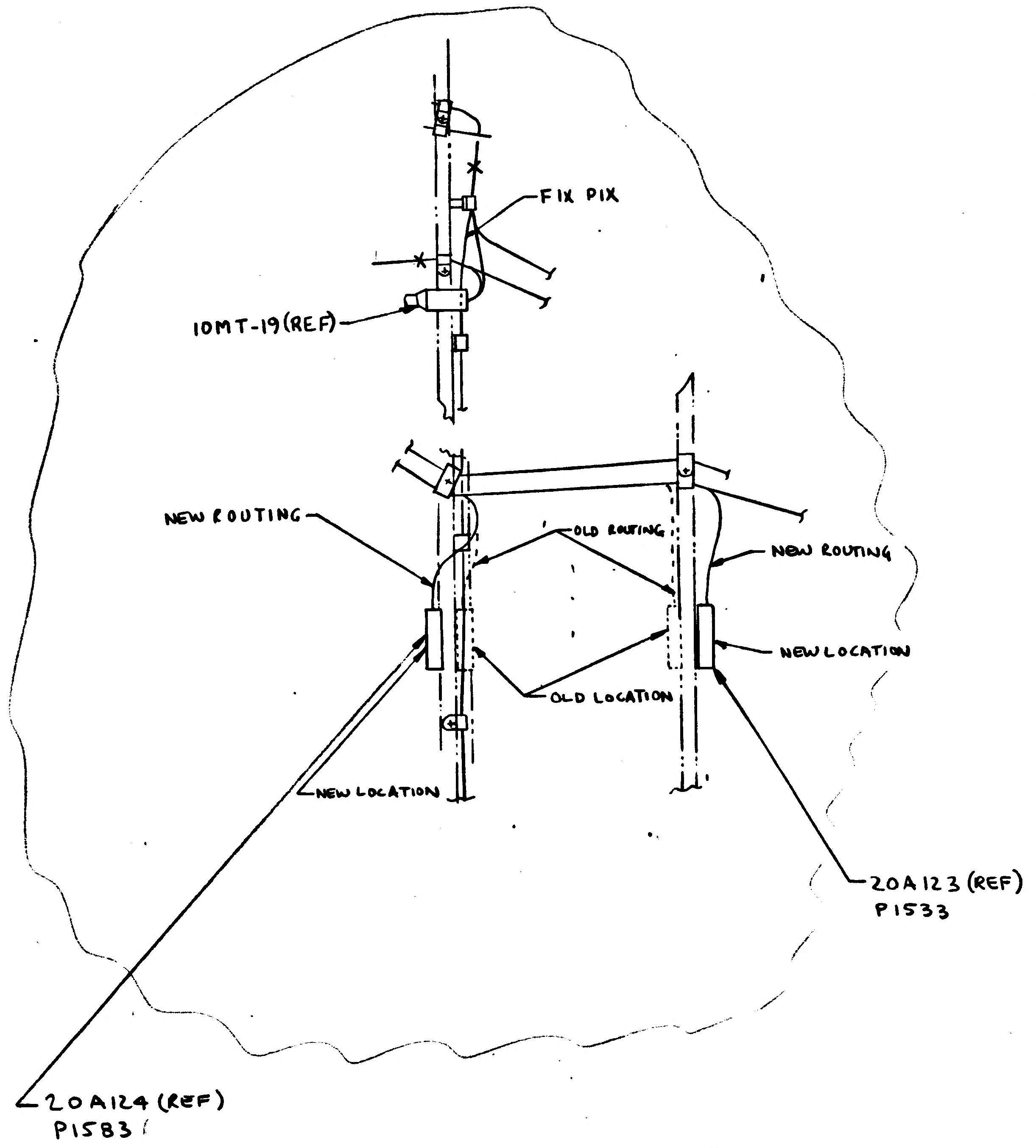
FIX PIX
10MT-19 (REF)
NEW ROUTING
OLD ROUTING
NEW ROUTING
NEW LOCATION
OLD LOCATION
NEW LOCATION
20A123 (REF)
P1533
20A124 (REF)
P1583

VIEW E-E
(ROTATED 180°)

SHEET 6

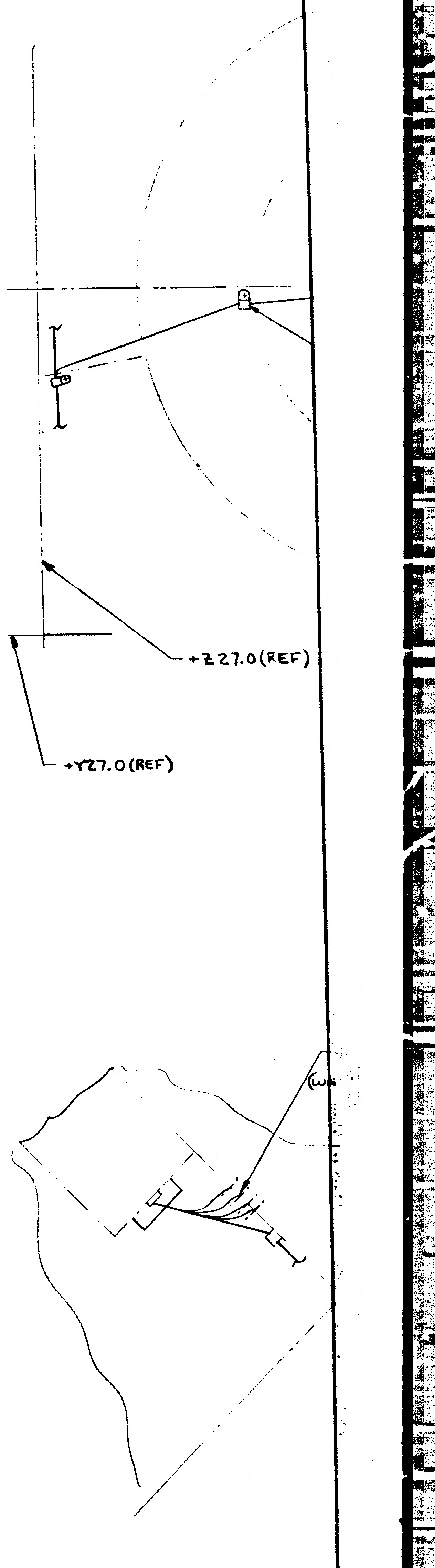
+Z27.0 (REF)
+Y27.0 (REF)

IN ZONE 17B REMOVED

01/03 NAS 9-1100

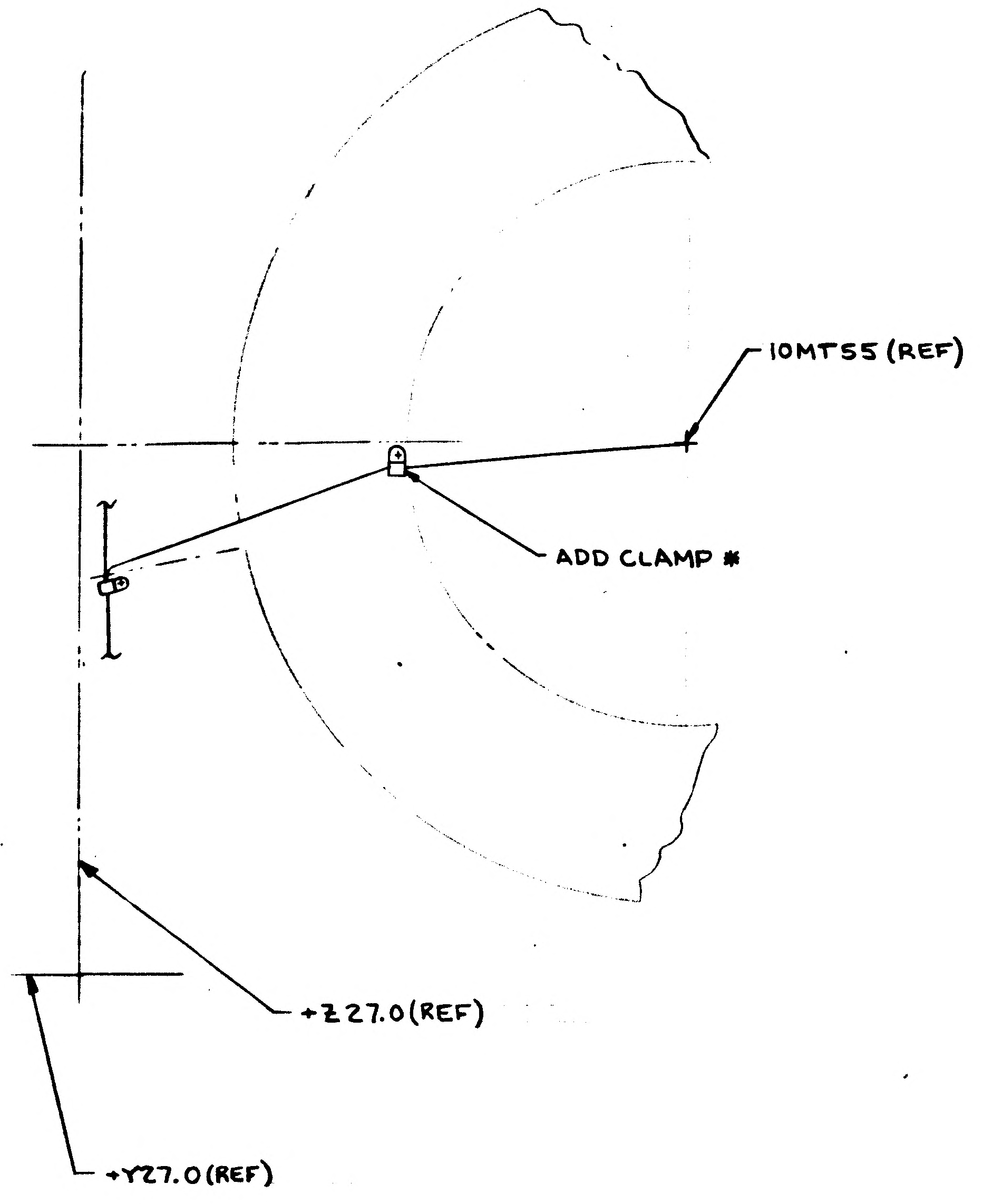

10MT55 (REF)
ADD CLAMP *
+Z27.0(REF)
+Y27.0(REF)

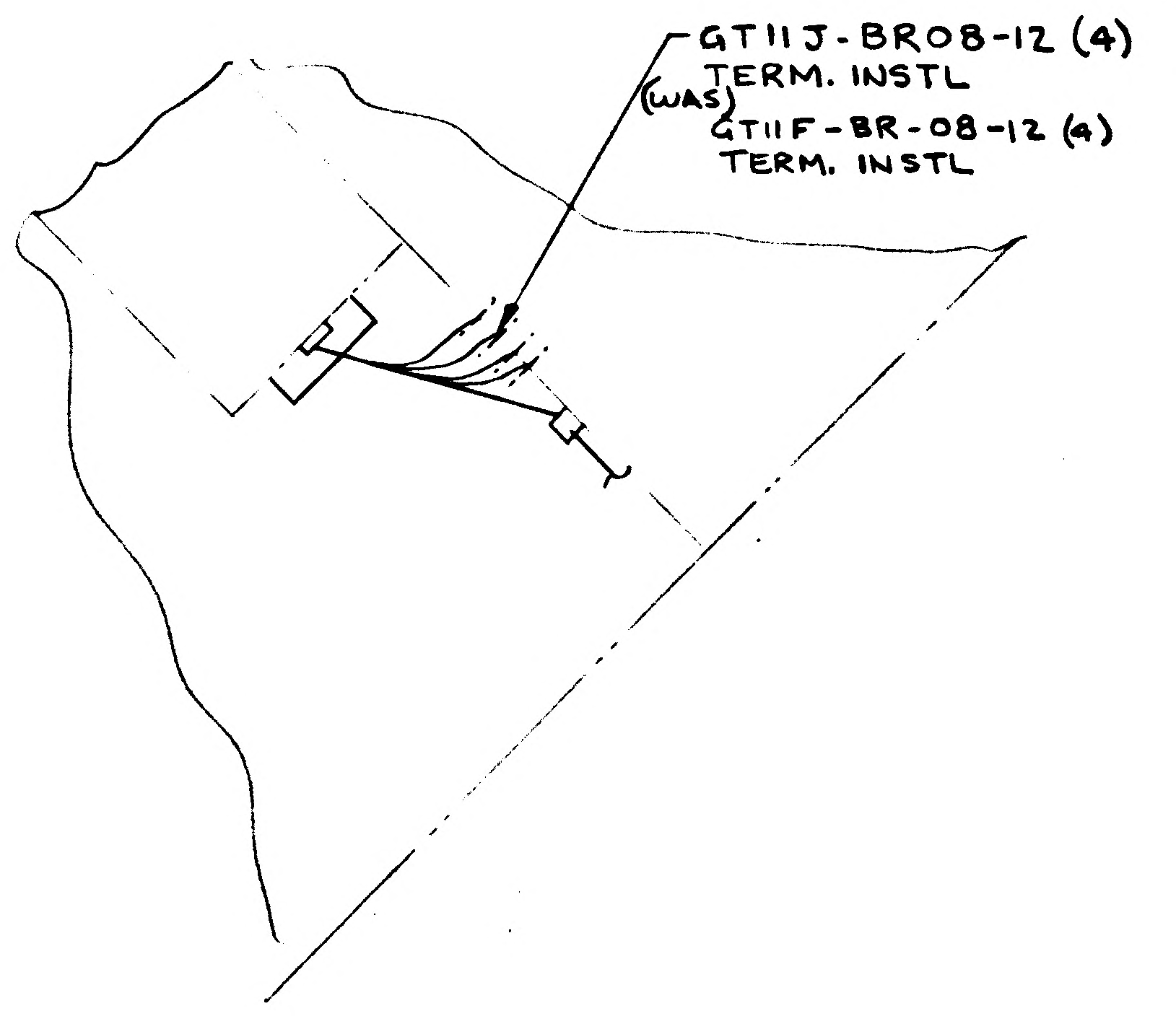

GT11J-BR08-12 (4)
TERM. INSTL
(WAS)
GT11F-BR-08-12 (4)
TERM. INSTL

IN ZONE 17B REMOVED SECTION AP-AP

SHEET 5

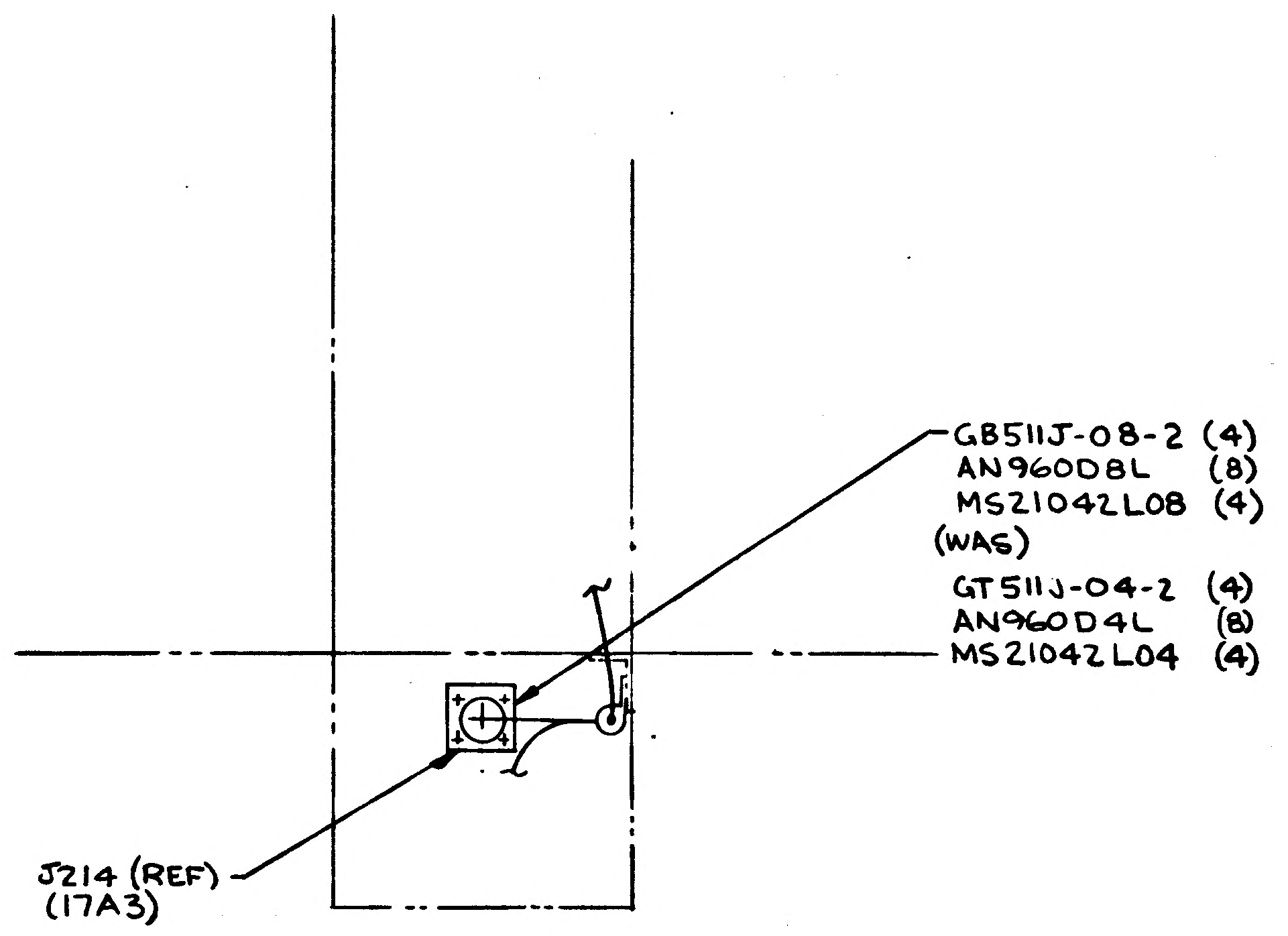

GB511J-08-2 (4)
AN960D8L (8)
MS21042L08 (4)
(WAS)
GT511J-04-2 (4)
AN960D4L (8)
MS21042L04 (4)
J214 (REF)
(17A3)

SECT X-X ZONE 8C

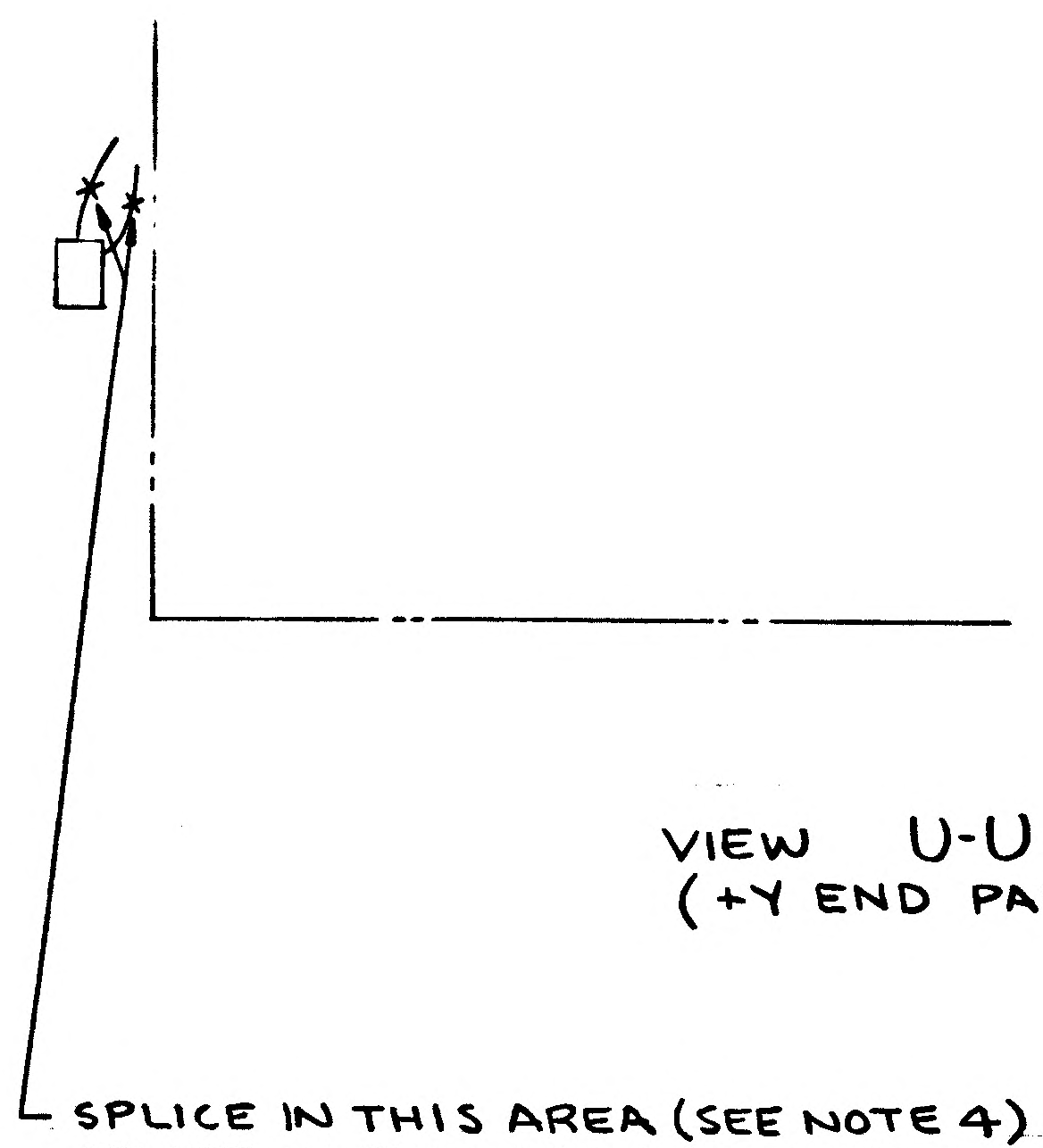

SPLICE IN THIS AREA (SEE NOTE 4) (WAS)
SPLICE IN THIS AREA (SEE NOTE 11)

VIEW U-U
(+Y END PANEL)

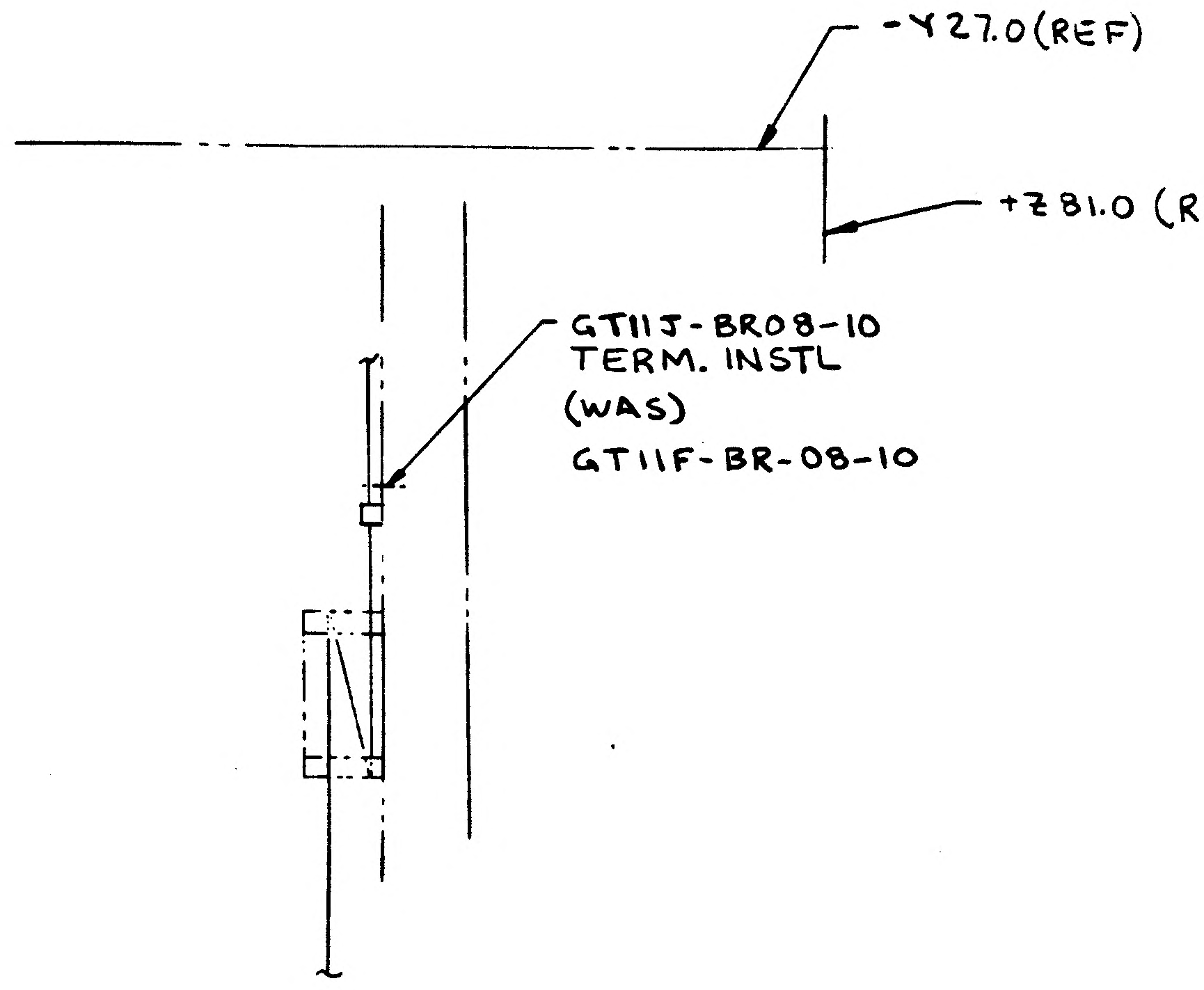

-Y27.0(REF)
+Z81.0 (REF)
GT11J-BR08-10
TERM. INSTL
(WAS)
GT11F-BR-08-10

IN ZONE 5C

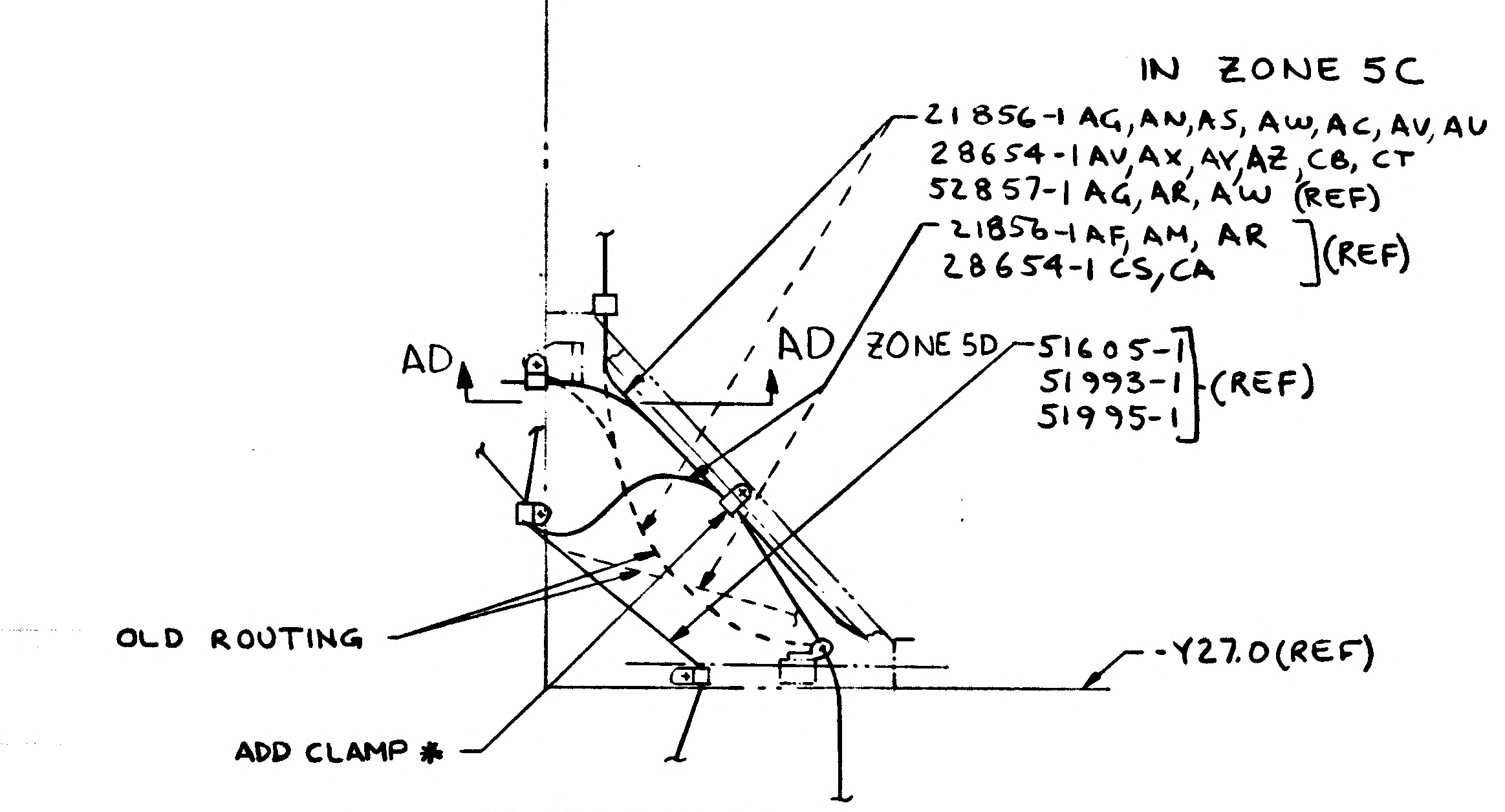

+Z27.0(REF)
21856-1 AG, AN, AS, AW, AC, AV, AU
28654-1 AV, AX, AY, AZ, CB, CT
52857-1 AG, AR, AW (REF)
21856-1 AF, AM, AR
28654-1 CS, CA
(REF)
AD
AD
ZONE 5D
51605-1
51993-1
51995-1
(REF)
OLD ROUTING
ADD CLAMP *
-Y27.0(REF)

IN ZONE 6C
ADD CLAMP & REROUTED WIRING AS SHOWN

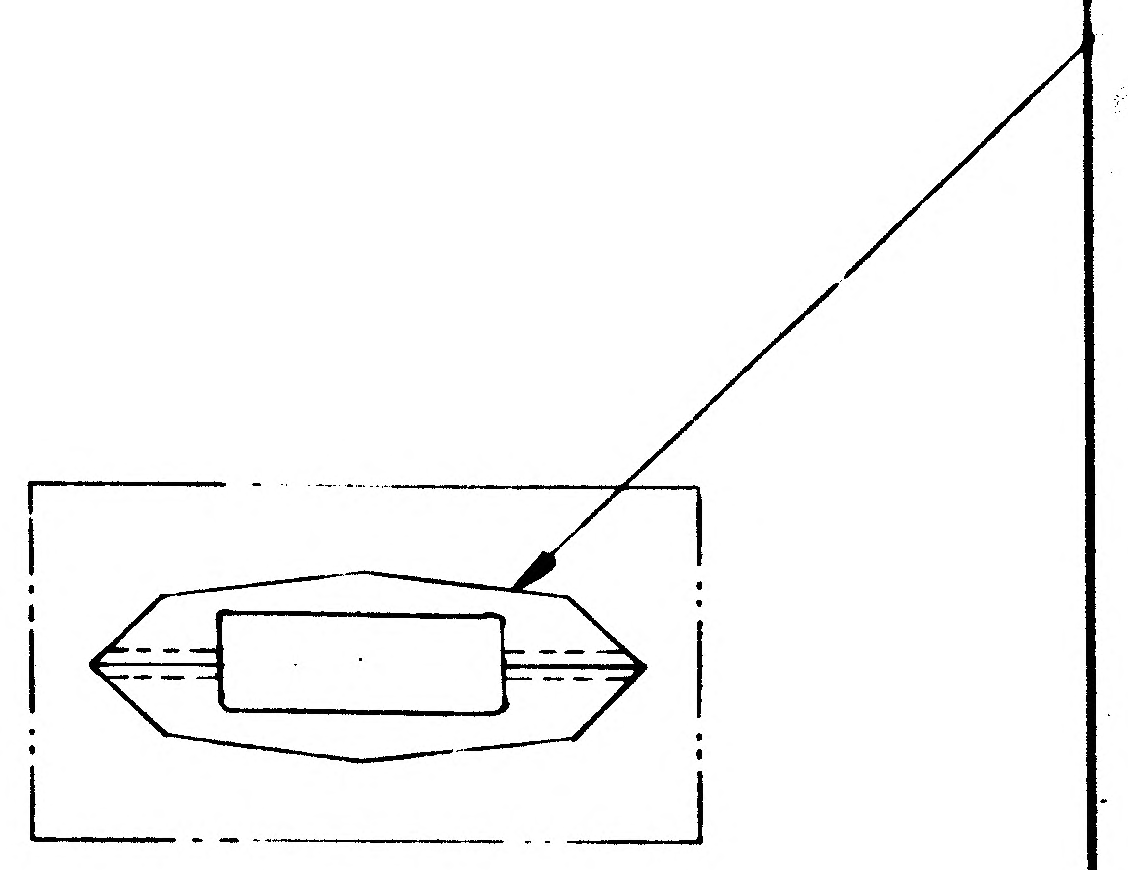

DETAIL AU ZONE
SCALE: NONE

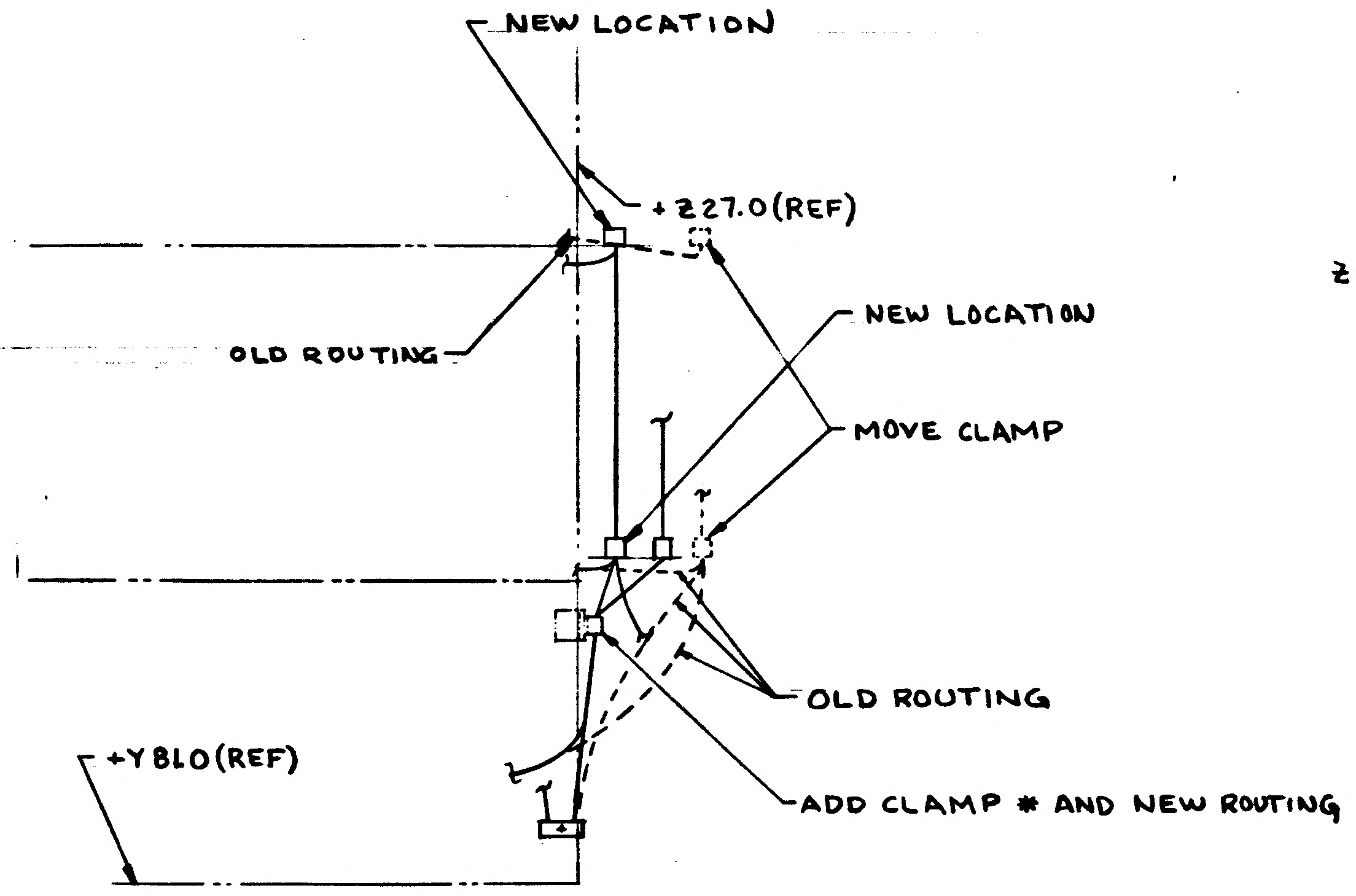

NEW LOCATION
+Z27.0(REF)
OLD ROUTING
NEW LOCATION
MOVE CLAMP
OLD ROUTING
ADD CLAMP * AND NEW ROUTING
+Y81.0(REF)

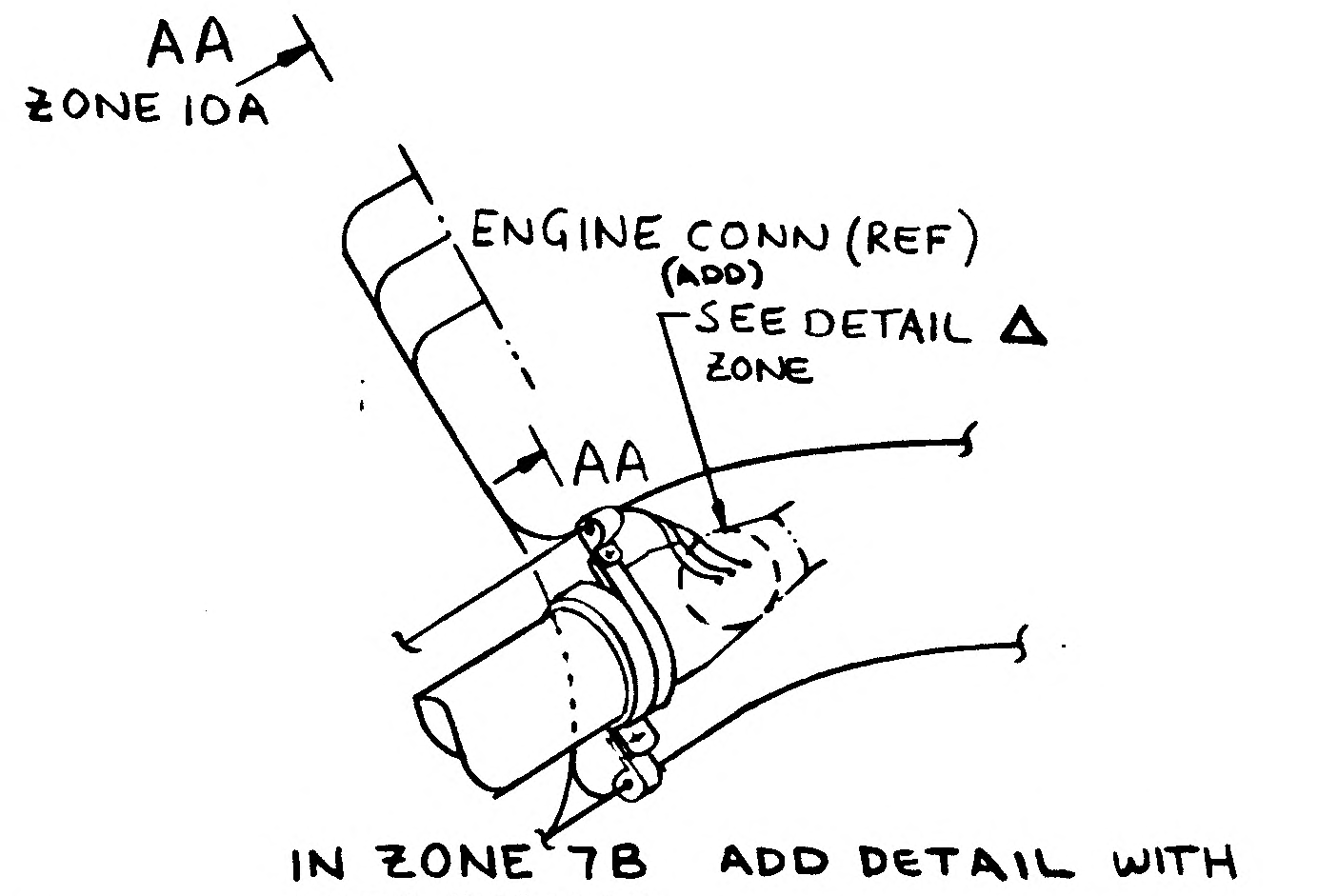

AA
ZONE 10A
ENGINE CONN (REF)
(ADD)
SEE DETAIL Δ
ZONE
AA

IN ZONE 7B ADD DETAIL WITH
WIRE CHANGE

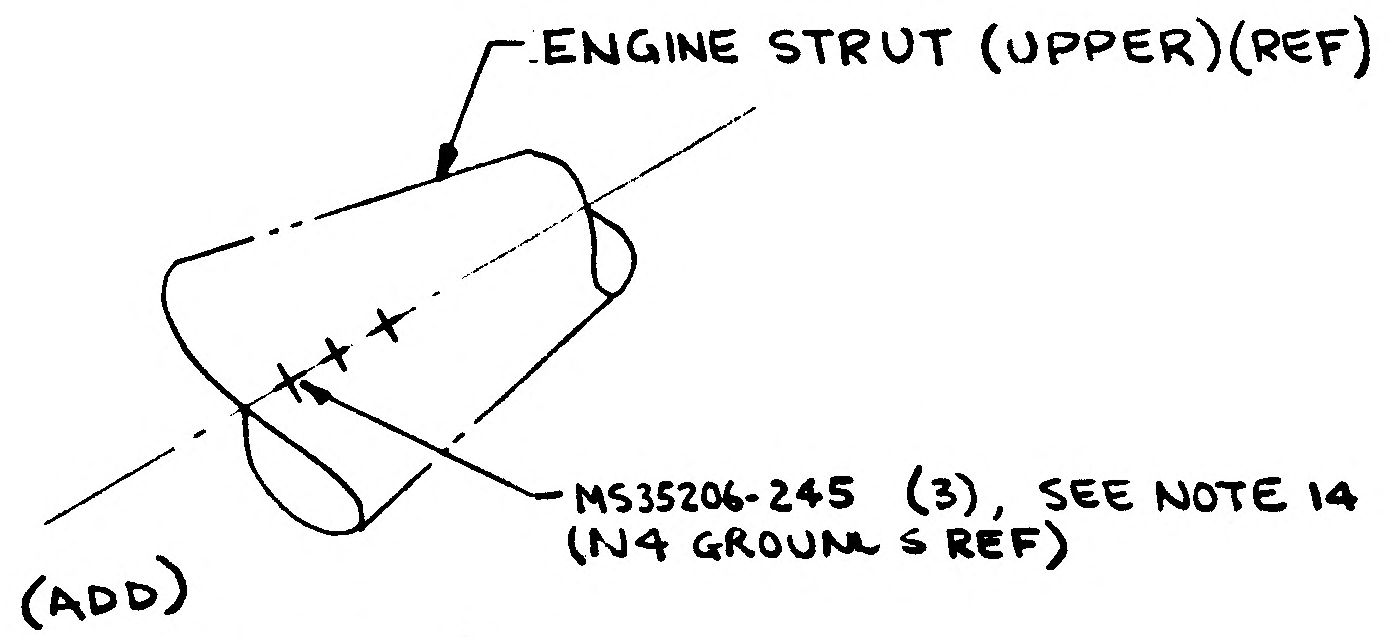

ENGINE STRUT (UPPER)(REF)
MS35206-245 (3), SEE NOTE 14
(N4 GROUND S REF)

(ADD)
DETAIL Δ ZONE
SCALE: NONE

SHEET 4

DESCRIPTION OF E.O.

ON ALL SHEETS GT11F-BR-0

ALL SPLICE IN THIS AREA C

* ALL CLAMP INSTL. PER LA

ON SH 4: SECT X-X; GB511J-08-2 (

INDETAIL AU; LDW280M16125-1 (

ON SH 7: IN VIEW S-S RELOCATE

AN960D6L (8), MS21042

DETAIL SPEC REQD		CLASS II ENGRG CHG

REASON FOR EO

TO CORRECT DRAWING
ENGINEERING ERROR
RELOCATION OF ELEC G

MODEL	EFFECTIVITY PROCURING ACT. NO.	GAEC UNIT NO.
LM		LM-

1441

ISSUED BY R. EBERLE SECTION E

ENG 32.3 REV 3-65

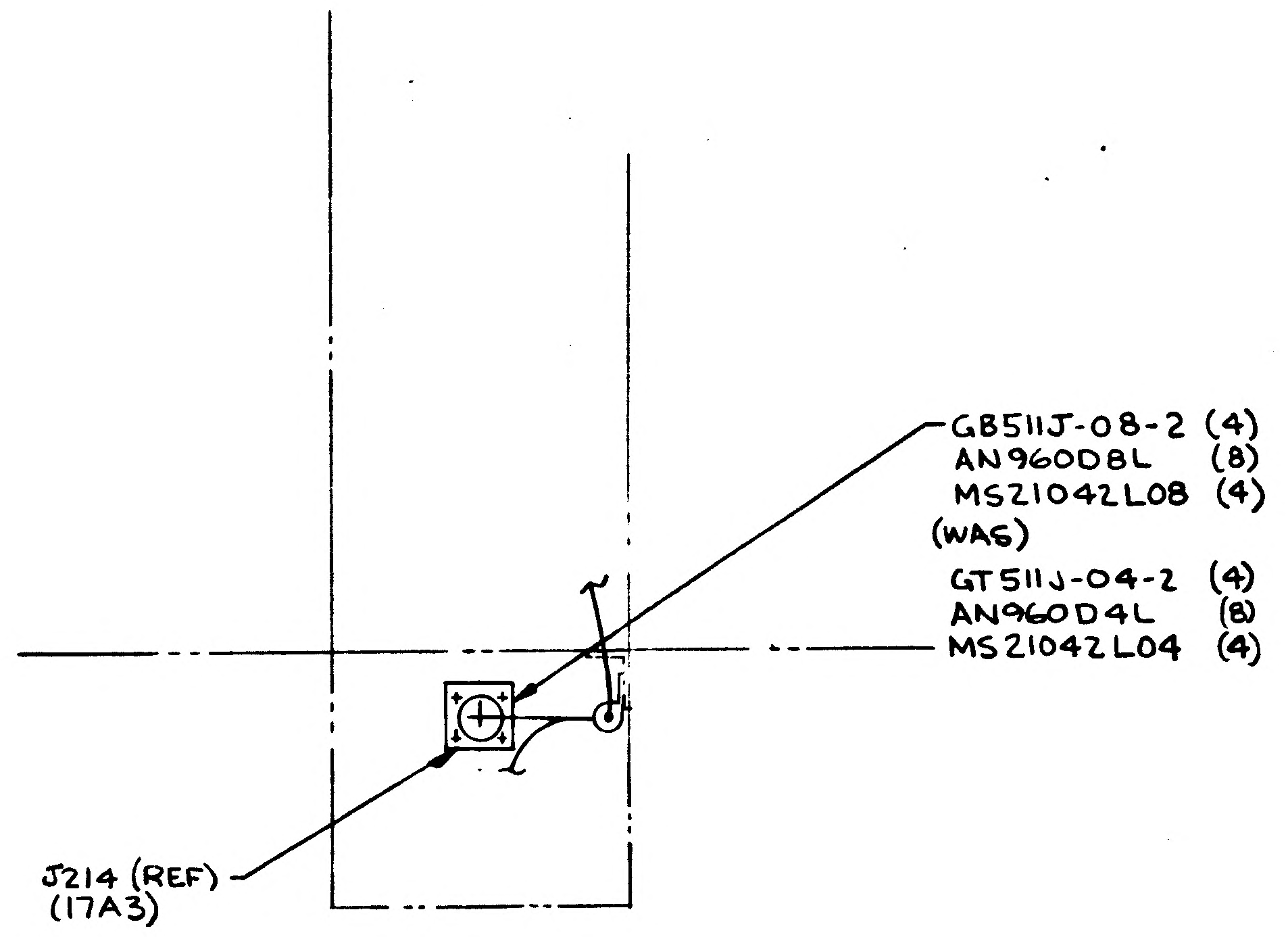
GB511J-08-2 (4)
AN960D8L (8)
MS21042L08 (4)
(WAS)
GT511J-04-2 (4)
AN960D4L (8)
MS21042L04 (4)
J214 (REF)
(17A3)

SECT X-X ZONE 8C

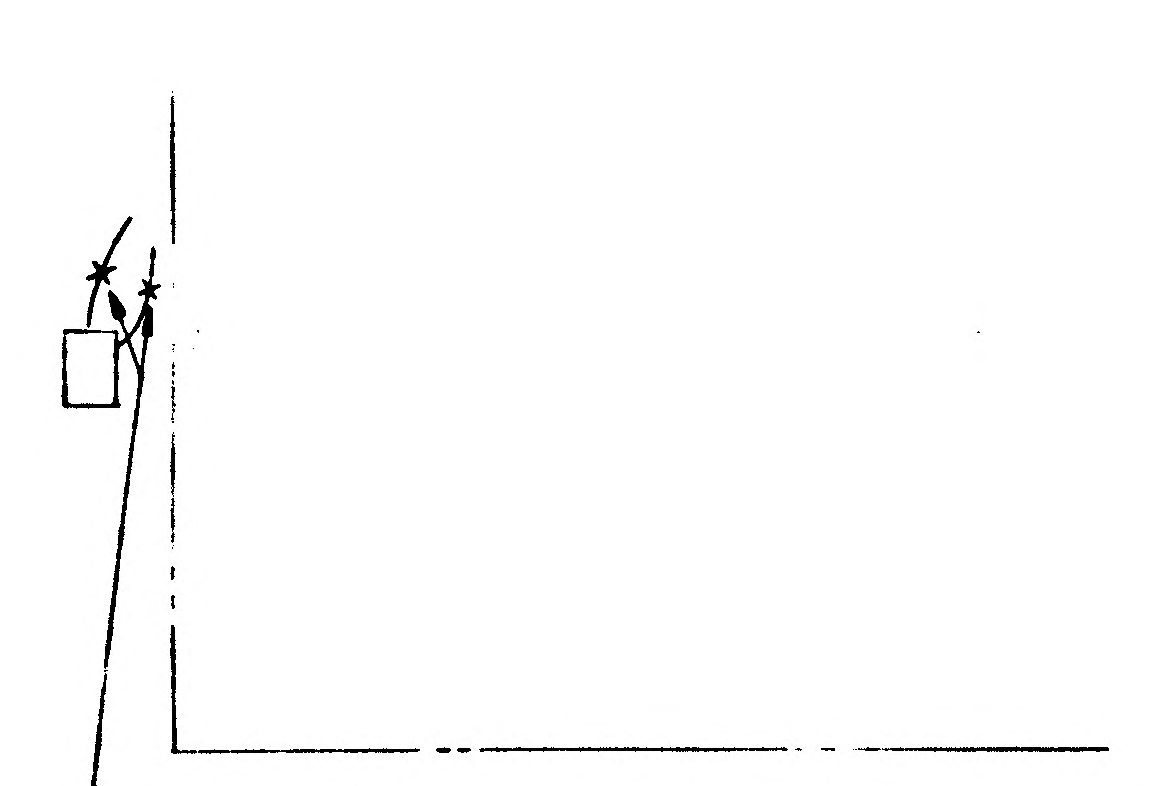

VIEW U-U
(+Y END PANEL)

SPLICE IN THIS AREA (SEE NOTE 4) (WAS)
SPLICE IN THIS AREA (SEE NOTE 11)

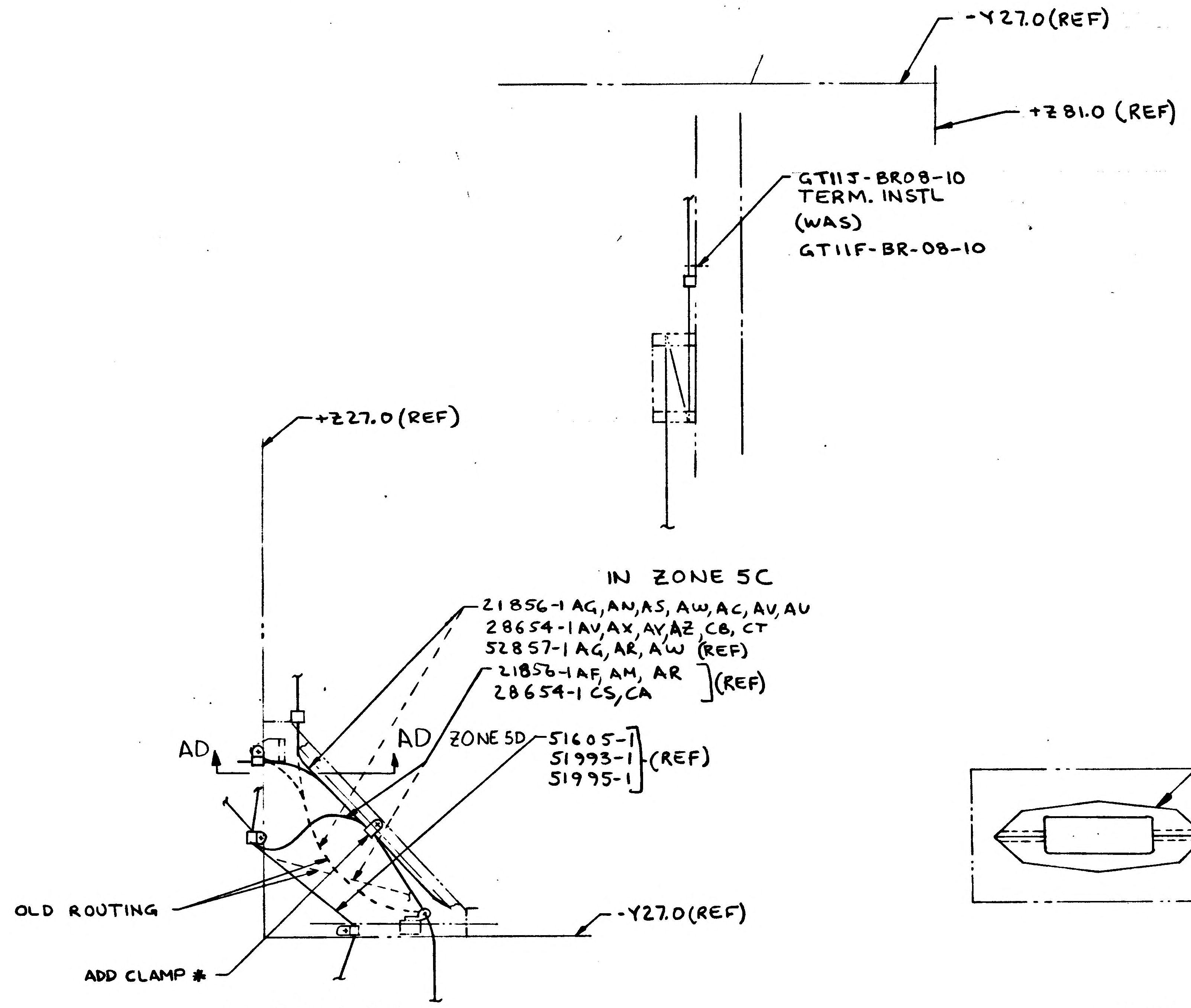
-Y27.0(REF)
+Z81.0 (REF)
GT11J-BR08-10
TERM. INSTL
(WAS)
GT11F-BR-08-10
+Z27.0(REF)
21856-1 AG, AN, AS, AW, AC, AV, AU
28654-1 AV, AX, AY, AZ, CB, CT
52857-1 AG, AR, AW (REF)
21856-1 AF, AM, AR
28654-1 CS, CA
(REF)
AD
AD
ZONE 5D
51605-1
51993-1
51995-1
(REF)
OLD ROUTING
-Y27.0(REF)
ADD CLAMP *

IN ZONE 5C

IN ZONE 6C
ADD CLAMP & REROUTED WIRING AS SHOWN

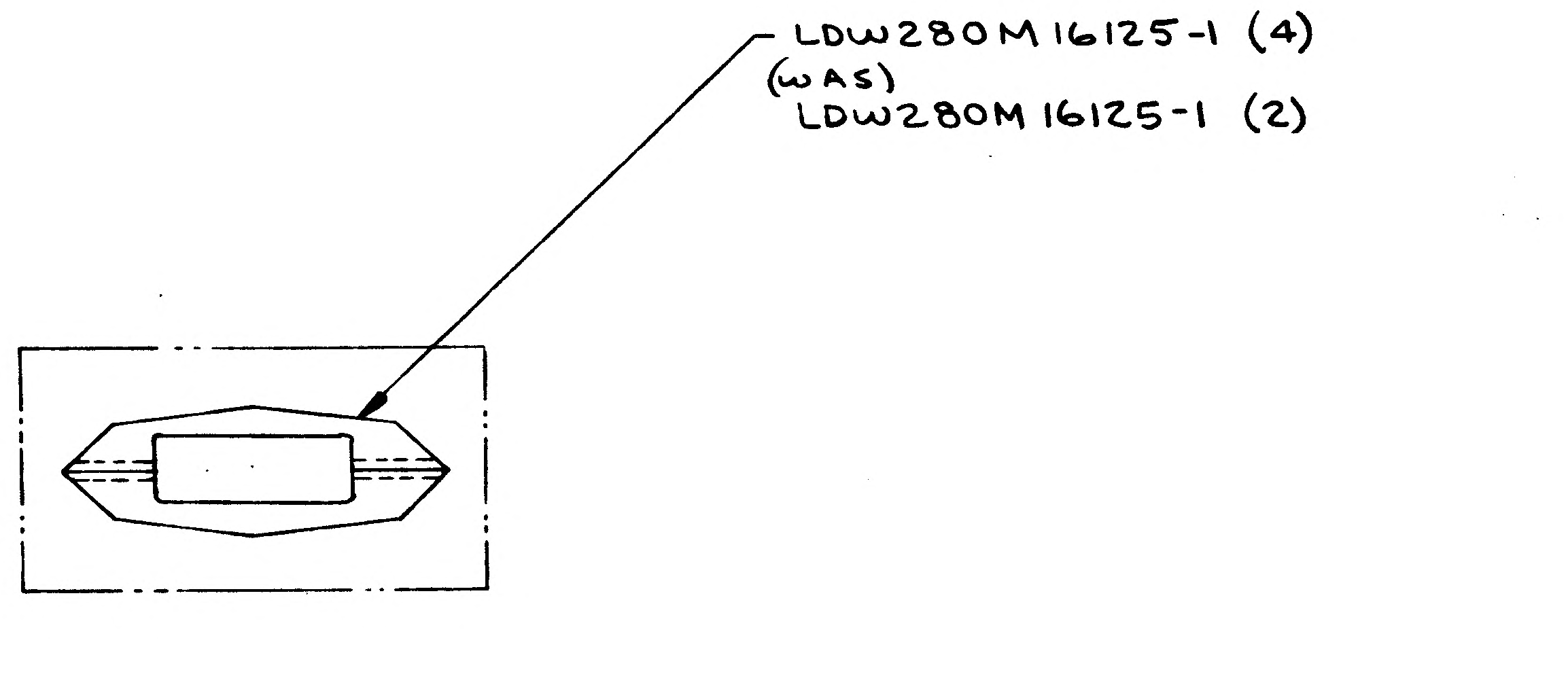
LDW280M16125-1 (4)
(WAS)
LDW280M16125-1 (2)

DETAIL AU ZONE 6B
SCALE: NONE

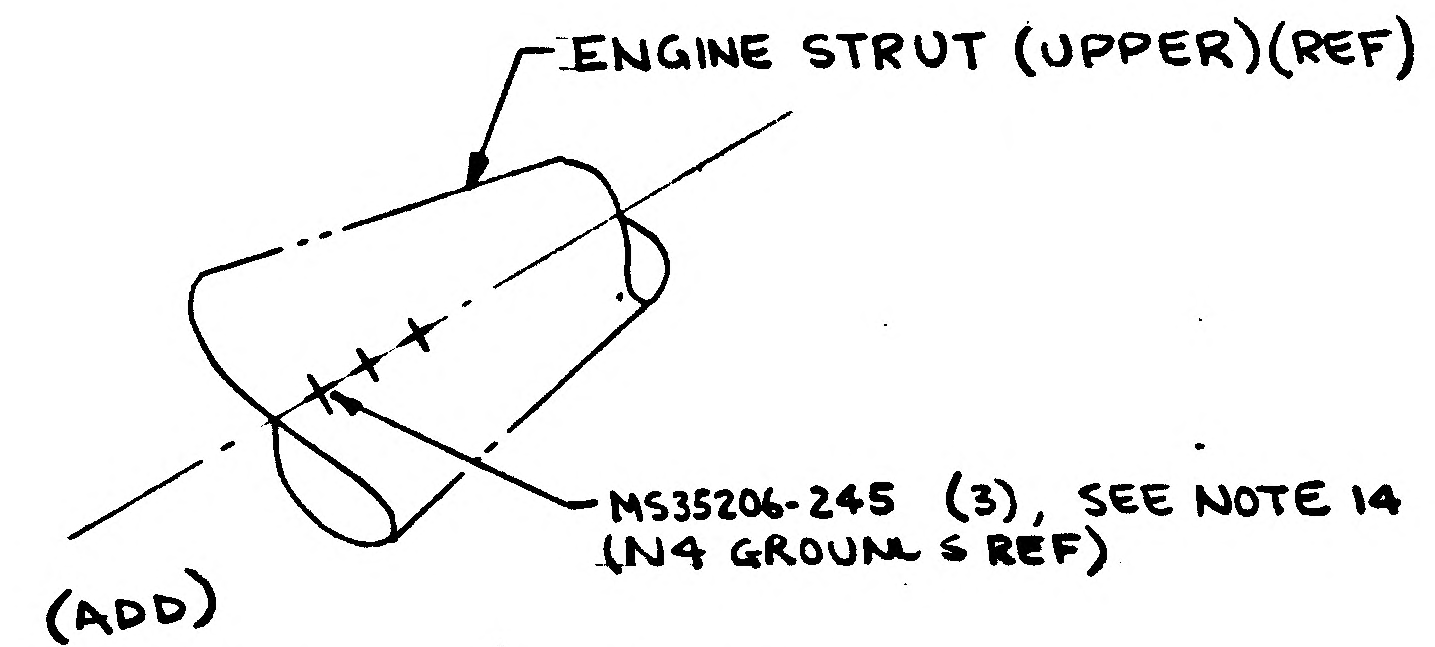
ENGINE STRUT (UPPER)(REF)
MS35206-245 (3), SEE NOTE 14
(N4 GROUNDS REF)

(ADD)
DETAIL Δ ZONE
SCALE: NONE

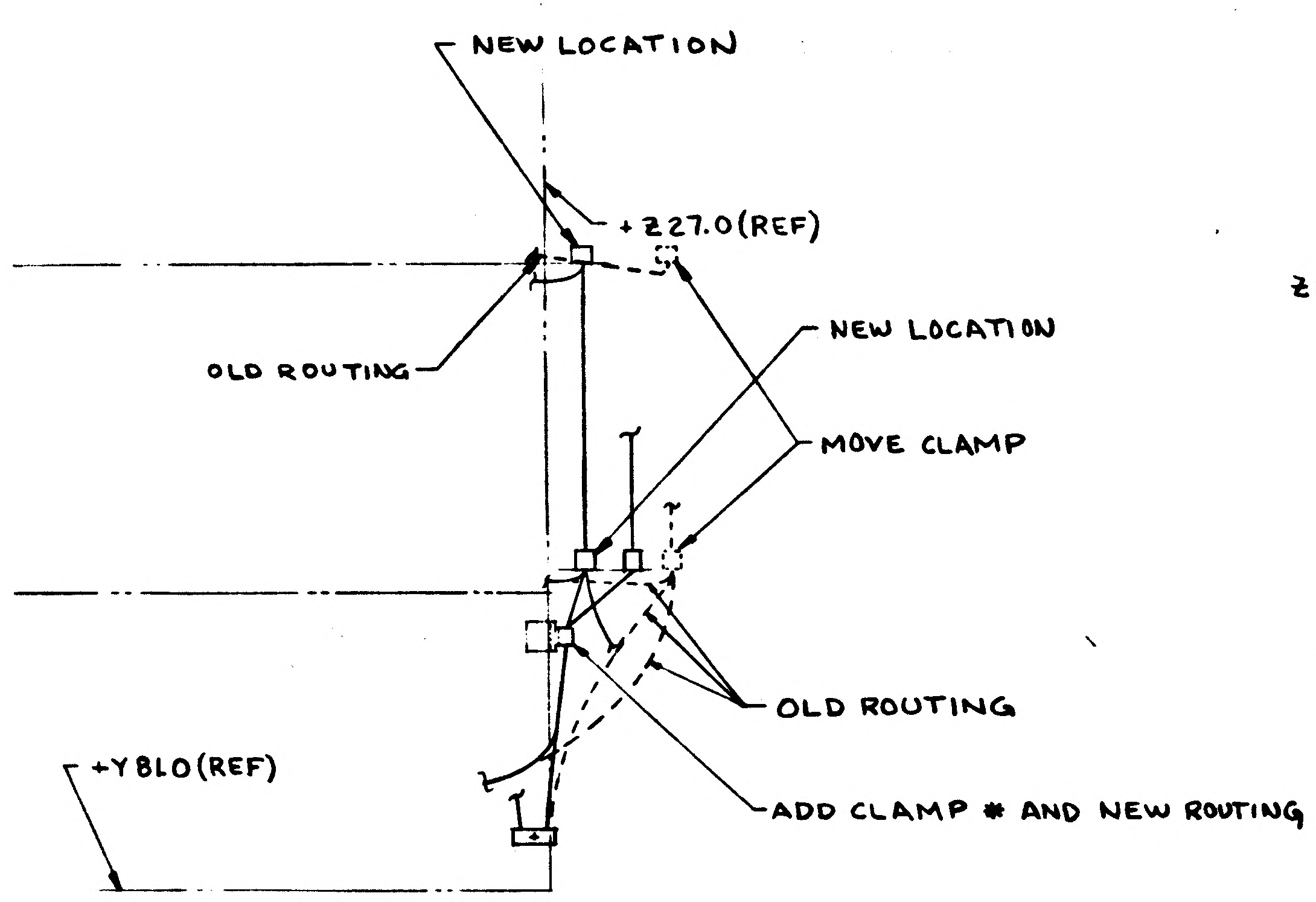
NEW LOCATION
+Z27.0(REF)
OLD ROUTING
NEW LOCATION
MOVE CLAMP
OLD ROUTING
+Y8L0(REF)
ADD CLAMP * AND NEW ROUTING

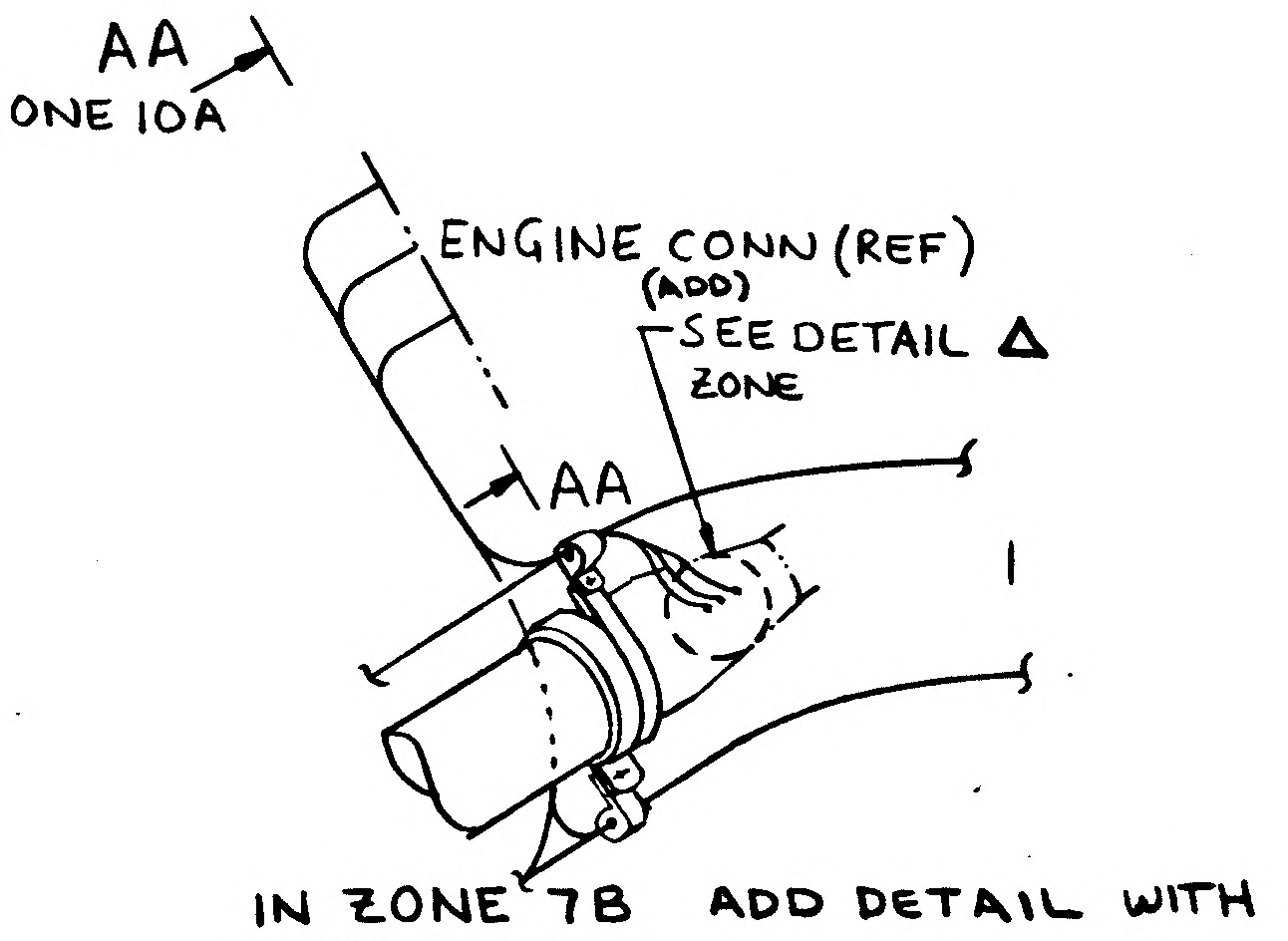
AA
ZONE 10A
ENGINE CONN (REF)
(ADD)
SEE DETAIL Δ
ZONE
AA

IN ZONE 7B ADD DETAIL WITH
WIRE CHANGE

DESCRIPTION OF E.O.

ON ALL SHEETS GT11F-BR-08-12 SHOULD READ GT11J-BR08-12 TERM INSTL

ALL SPLICE IN THIS AREA CALLOUTS SHOULD READ (SEE NOTE 4) NOT (SEE NOTE 11)

* ALL CLAMP INSTL. PER LPC 280-23 (REF)

ON SH 4: SECT X-X; GB511J-08-2 (4), AN960D8L (8), MS21042L08(4) WAS GB511J-04-2 (4), AN960D4L (8) MS21042L04(4)
INDETAIL AU; LDW280M16125-1 (4) WAS (2) ADDED DETAIL Δ & MS35206-245(3)
ON SH 7: IN VIEW S-S RELOCATED BATTERY GROUNDS WITH ASSOC HARDWARE. ADDED GB511J-06-2 (4),
AN960D6L (8), MS21042L06 (4)

SHEET 4

(5)

DETAIL SPEC REQD		CLASS II ENGRG CHG	✓	CLASS I ENGRG CHG		LAV 390-386			CONTROL INFO NO. LDW280A4872		
REASON FOR EO TO CORRECT DRAWING DUE TO ENGINEERING ERROR & RELOCATION OF ELEC GROUNDS				DESCRIPTION OF EO SEE ABOVE					GRUMMAN EO RELEASE VE 1/18/17		
MODEL	EFFECTIVITY PROCURING ACT. NO.	GAEC UNIT NO.	SUB CONTR UNIT NO.	DRAWING REVISION REQD	DISPOSITION OF PARTS	BY / DATE			GROUP LEADER	STRESS GROUP	LIAISON ENGRG / PROJ ENGR / ~~GOVT~~
LM		LM-2(32)		✓ REVISE DWG / RECORD EO	✓ REWORK / SCRAP	1/13/67 / 1 VDI	SUPPORT	RELIAB GROUP	1/13/67	1/13/67	1/13/67 / 1/17/67
				PRIORITY C	DRAWING TITLE LINES INSTALLATION ELECTRONIC DESCENT STAGE				ENGINEERING ORDER DRAWING NO. LDW280-52607	EO NO. A3	
ISSUED BY R. EBERLE X1441	SECTION EQUIP LINES	GROUP NO. 332	PL 35	CODE IDENT NO. 26512	GRUMMAN AIRCRAFT ENGINEERING CORP BETHPAGE, L. I., N. Y.						

ENG 30.3 REV 3-66

03/03 NAS 9-1100

ENG 32 - REV 3-65 8

GRUMMAN AIRCRAFT ENGINEERING CORP.
CODE IDENT NO. 26512
ENGINEERING ORDER

DWG NO LDW2(…) 52607		EO NO. A4
CONTROL INFO NO. LDW280A5120		

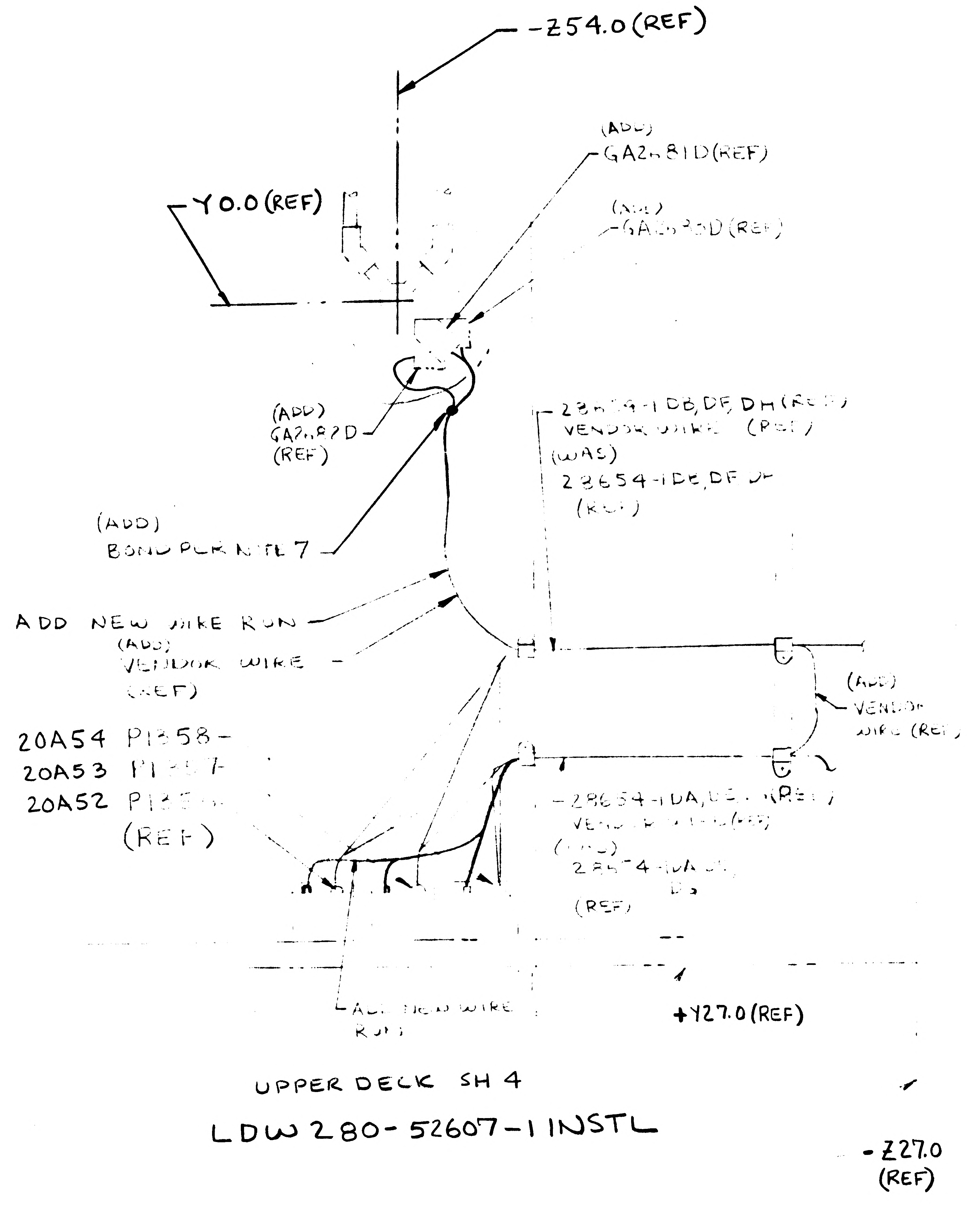
-Z54.0 (REF)
Y0.0 (REF)
(ADD) GA2681D (REF)
(ADD) GA2682D (REF)
(ADD) GA2682D (REF)
(ADD) BOND PER NOTE 7
ADD NEW WIRE RUN
(ADD) VENDOR WIRE (REF)
20A54 P1358-
20A53 P1357-
20A52 P1356-
(REF)
-28654-1DB, DF, DH (REF)
VENDOR WIRE (REF)
(WAS)
28654-1DE, DF, DH
(REF)
(ADD) VENDOR WIRE (REF)
-28654-1DA, DC, DG (REF)
VENDOR WIRE (ADD)
(WAS)
28654-1DA, DC
DG
(REF)
ADD NEW WIRE RUN
+Y27.0 (REF)
-Z27.0 (REF)

UPPER DECK SH 4

LDW280-52607-1 INSTL

DETAIL SPEC REQ		CL II ENGRG CHG	✓	CL I ENGRG CHG	

REASON FOR EO: PROVIDE SUPPORT FOR VENDOR WIRING

FOR-1
ADDED VENDOR WIRE ROUTE FROM GA2681D,
GA2682D & GA2683D TO 20A52, 20A53 & 20A54.
ADDED BONDING TO VENDOR WIRE.

MODEL	PROCURING ACTIVITY NO.	GAEC UNIT NO.	SUBCONTR UNIT NO.
LM		LM-2 (32)	

DRAWING CHANGE REQD: ✓
DISPOSITION OF PARTS: ✓
APPROVED BY: [illegible] 1/23/67
1 VDI
1-23-67 1/23/67
1-23-67 1/24/67
GAEC C EO RELEASE FK 1/24/67
5
PRIORITY: C
LINES INSTALLATION [illegible]
DRAWING: LDW280-52607
EO NO.: A4

ISSUED BY [illegible] X1441 [illegible]

01
NAS 9-1100

ENG 32.2 REV 3-65

GRUMMAN AIRCRAFT ENGINEERING CORP.
CODE IDENT NO. 26512
ENGINEERING ORDER EMF

DWG NO. LDW280-52607		EO NO. A5
CONTROL INFO NO. LDW280A-5244		

ON SHT 6 VIEW B-B ZONE 27B RELOCATE CLAMP & REROUTE LDW390-52652-1BN CABLE AS SHOWN IN PICTURE BELOW.

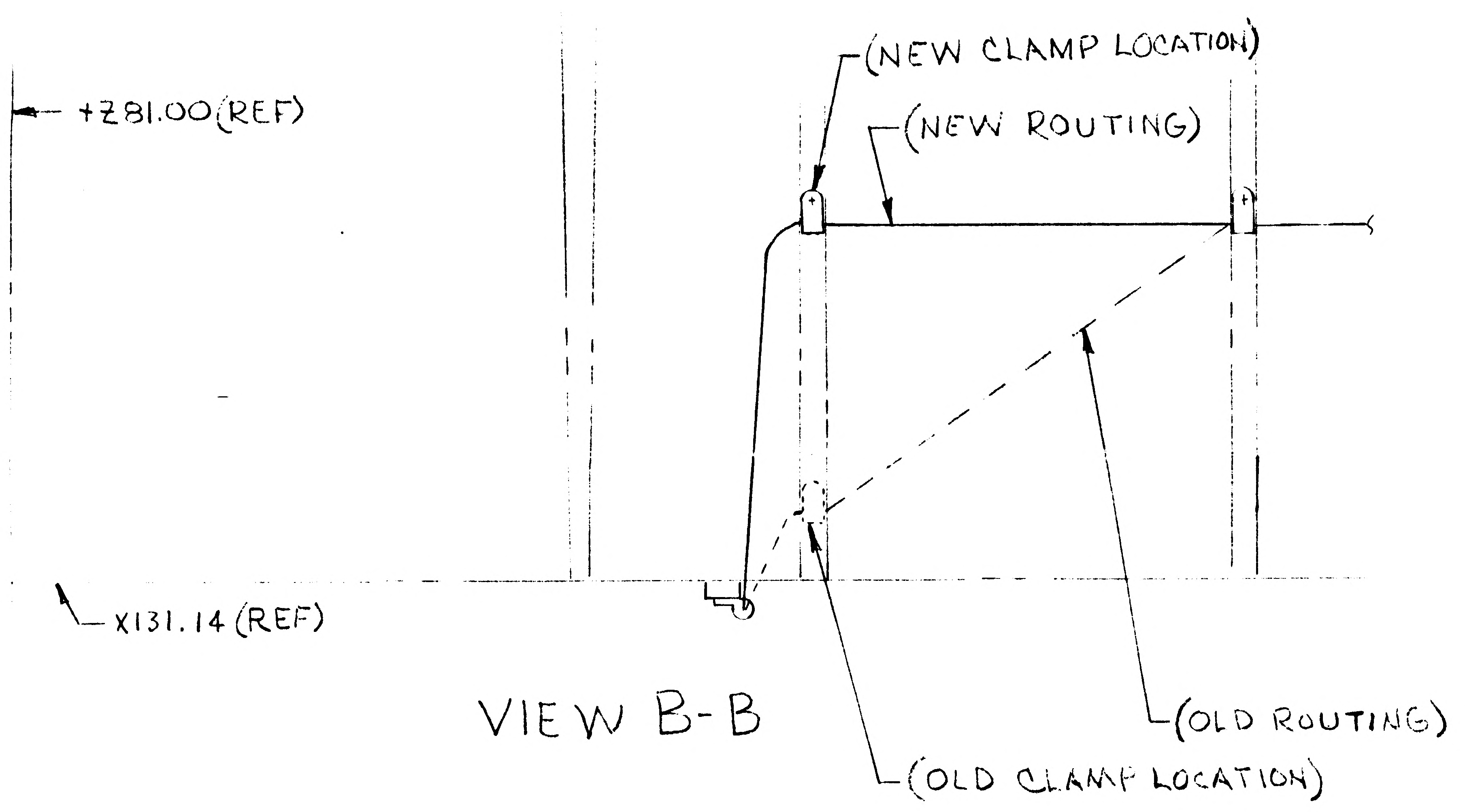

VIEW B-B

LDW280-52607 -1 INSTL

THIS E.O. COVERS EXISTING CONFIG.

DETAIL SPEC REQ		CL II ENGRG CHG ✓	CL I ENGRG CHG	5

REASON FOR EO: DRAWING ERROR

DESCRIPTION OF EO: ON SHT 6 VIEW B-B ZONE 27B RELOCATED CLAMP & REROUTED CABLE LDW 390-52652-1 BN

GAEC EO RELEASE: C FR 1/26/67

MODEL	PROCURING ACTIVITY NO.	GAEC UNIT NO.	SUB CONTR UNIT NO.
LM		NOT REQD	

DRAWING CHANGE REQD		DISPOSITION OF PARTS		
REVISE DWG	RECORD EO	REWORK	SCRAP	
✓		NOT REQD		

APPROVED BY				JW/CHC					
DATE 1/24/67				1/24/67	1/24/67		1/26/67	1/26/67	
6	VDI	SUPPORT	RELIAB GROUP	GROUP LEADER	STRESS GROUP	LIAISON ENGRG	PROJ ENGRG		GOVT

PRIORITY	DRAWING TITLE	DRAWING NO	EO NO.
E	LINES INSTALLATION ELECTRONIC DESCENT STAGE	LDW280-52607	A5

ISSUED BY J FARRELL X1441 SECTION VDI (EQUIP LINES) GROUP NO. 332 PL 35

01 NAS 9-1100

GRUMMAN AIRCRAFT ENGINEERING CORP.
CODE IDENT NO. 26512
ENGINEERING ORDER

ENG 321 REV 3 65

DWG NO. LDW280-52607		EO NO. A6	
CONTROL INFO NO. LDW280A5329			

ON-1

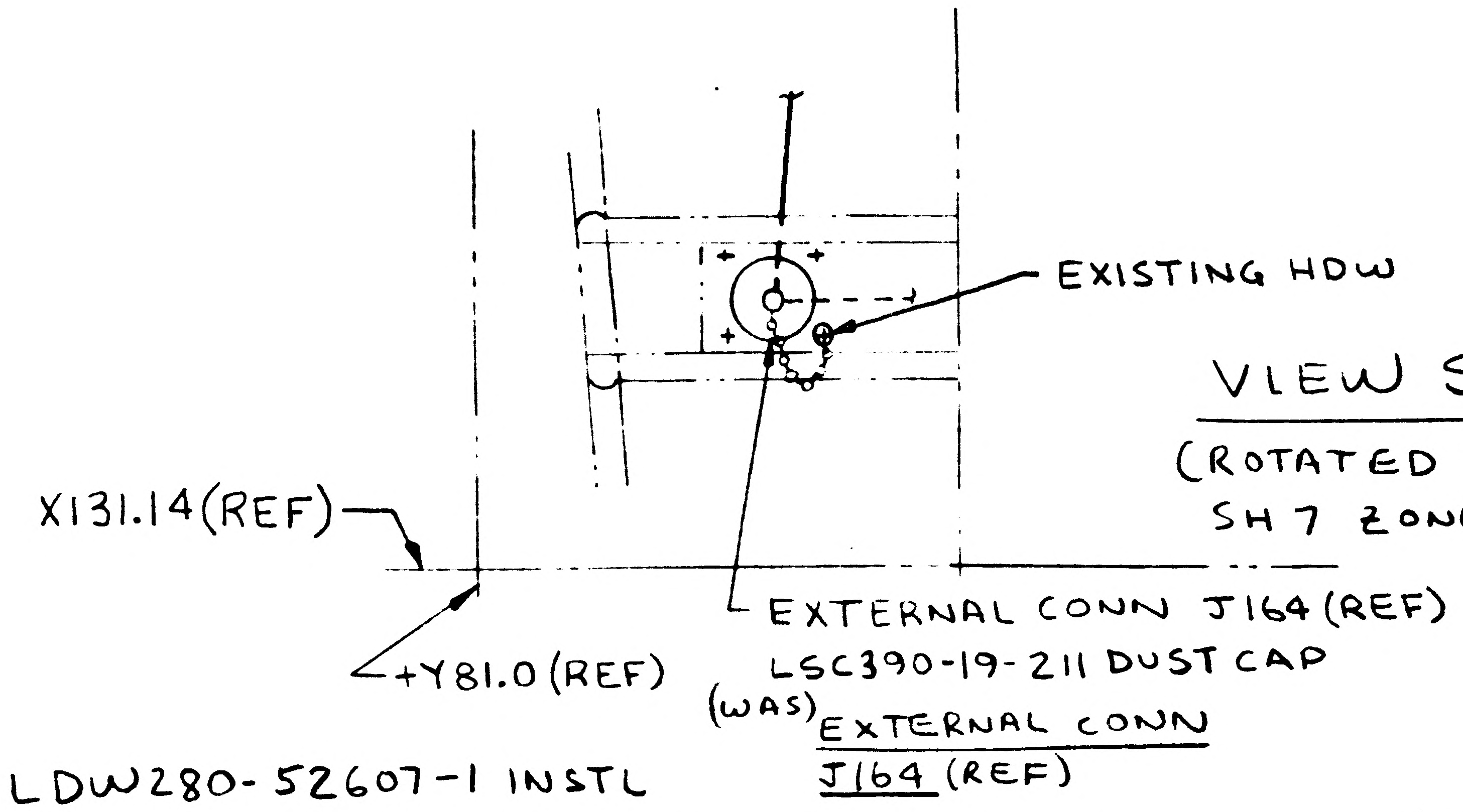
EXISTING HDW
X131.14 (REF)
+Y81.0 (REF)
EXTERNAL CONN J164 (REF)
LSC390-19-211 DUST CAP
(WAS) EXTERNAL CONN J164 (REF)

VIEW S-S
(ROTATED 90° CW)
SH 7 ZONE 50B

LDW280-52607-1 INSTL

5

DETAIL SPEC REQ	☐	CL II ENGRG CHG	☑	CL I ENGRG CHG	☐

REASON FOR EO	DESCRIPTION OF EO	GAEC EO RELEASE
ADDITION OF DUST CAP FOR CONNECTOR	ON-1 INSTL ADDED LSC390-19-211 DUST CAP	2/6/67

MODEL	EFFECTIVITY: PROCURING ACTIVITY NO.	GAEC UNIT NO	SUB CONTR UNIT NO
LM		LM-2 (32)	

DRAWING CHANGE REQD: REVISE DWG	RECORD EO	DISPOSITION OF PARTS: REWORK	SCRAP	APPROVED BY / DATE		SUPPORT	RELIAB GROUP	GROUP LEADER	STRESS GROUP	LIAISON ENGRG	PROJ ENGRG	~~GOVT~~
✓		✓		1	VDI			—	W			
								—	2/2/67		2-3-67	2/4/67

PRIORITY	DRAWING TITLE	DRAWING NO	EO NO
C	LINES INSTL ELECTRONIC D/S	LDW280-52607	A6

ISSUED BY R. EBERLE x7033 SECTION VDI (EQUIP LINES) GROUP NO. 332 PL 35

01 NAS 9-1100

01
NAS 9-1100

ENG 32.2 REV 3-65

GRUMMAN AIRCRAFT ENGINEERING CORP
CODE IDENT NO. 26512
ENGINEERING ORDER

NO. LDW280-52607 | EO NO. A7
CONTROL INFO NO. LDW280A[illegible]

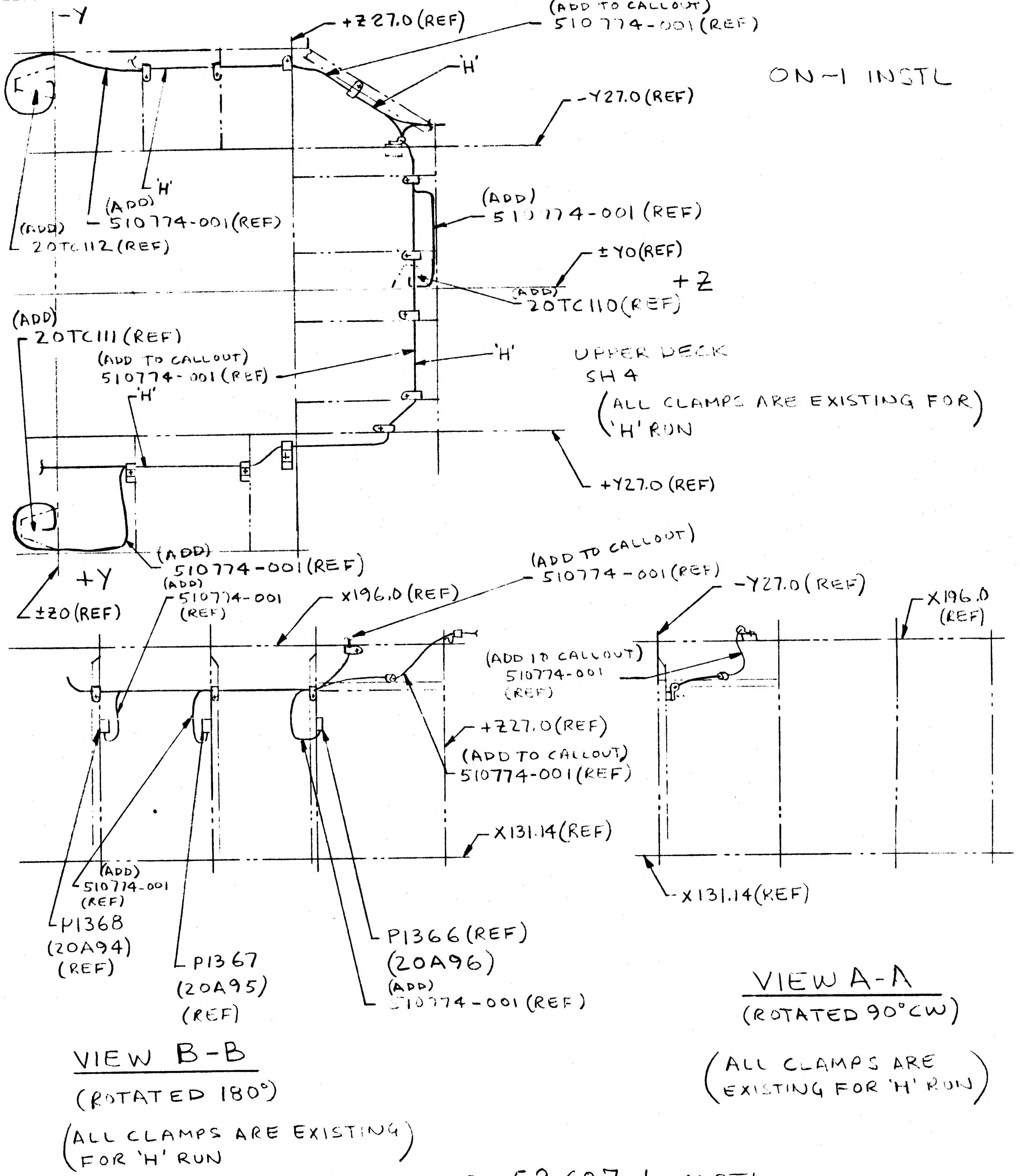
ON-1 INSTL
-Y
+Z27.0(REF)
(ADD TO CALLOUT) 510774-001(REF)
'H'
-Y27.0(REF)
(ADD) 510774-001(REF)
'H'
(ADD) 20TC112(REF)
(ADD) 511774-001(REF)
±Y0(REF)
+Z
(ADD) 20TC110(REF)
(ADD) 20TC111(REF)
(ADD TO CALLOUT) 510774-001(REF)
'H'
'H'
UPPER DECK SH 4
(ALL CLAMPS ARE EXISTING FOR 'H' RUN)
+Y27.0(REF)
+Y
±Z0(REF)
(ADD) 510774-001(REF)
(ADD) 510774-001 (REF)
X196.0(REF)
(ADD TO CALLOUT) 510774-001(REF)
-Y27.0(REF)
X196.0 (REF)
(ADD TO CALLOUT) 510774-001 (REF)
+Z27.0(REF)
(ADD TO CALLOUT) 510774-001(REF)
X131.14(REF)
X131.14(REF)
(ADD) 510774-001 (REF)
P1368 (20A94) (REF)
P1367 (20A95) (REF)
P1366(REF) (20A96)
(ADD) 510774-001 (REF)
VIEW A-A
(ROTATED 90°CW)
(ALL CLAMPS ARE EXISTING FOR 'H' RUN)
VIEW B-B
(ROTATED 180°)
(ALL CLAMPS ARE EXISTING FOR 'H' RUN

LDW280-52607-1 INSTL

NOTE: WORK ACCOMPLISHED (5)

DETAIL SPEC REQ		CL II ENGRG CHG ✓	CL I ENGRG CHG									
REASON FOR EO: ADDITION OF INSTRUMENT WIRING				DESCRIPTION OF EO: ON-1 INSTL ADDED 510774-001(REF), 20TC110(REF), 20TC111 (REF), 20TC112(REF)								GAEC EO RELEASE 2/6/7
MODEL	EFFECTIVITY: PROCURING ACTIVITY NO	GAEC UNIT NO	SUB CONTR UNIT NO.	DRAWING CHANGE REQD		DISPOSITION OF PARTS		APPROVED BY / DATE		— / —	2/3/67	2/3/67 / 2/6/67
LM		LM-2(32)		REVISE DWG ✓	RECORD EO	REWORK ✓	SCRAP	1	VDI	SUPPORT	RELIAB GROUP	GROUP LEADER	STRESS GROUP	LIAISON ENGRG	PROJ ENGRG
				PRIORITY: C	DRAWING TITLE: LINES INSTL ELECT D/S					DRAWING NO. LDW280-52607		EO NO. A7

ISSUED BY [illegible] SECTION [illegible] (EQUIP LINES) GROUP NO. 332 P. 35

01 NAS 9-1100

ENG 32.2 REV 3-65

GRUMMAN AIRCRAFT ENGINEERING CORP
CODE IDENT NO. 26512
ENGINEERING ORDER

LDW280-52607 EO NO. A8
CONTROL INFO NO. LDW280A5358

ON-1

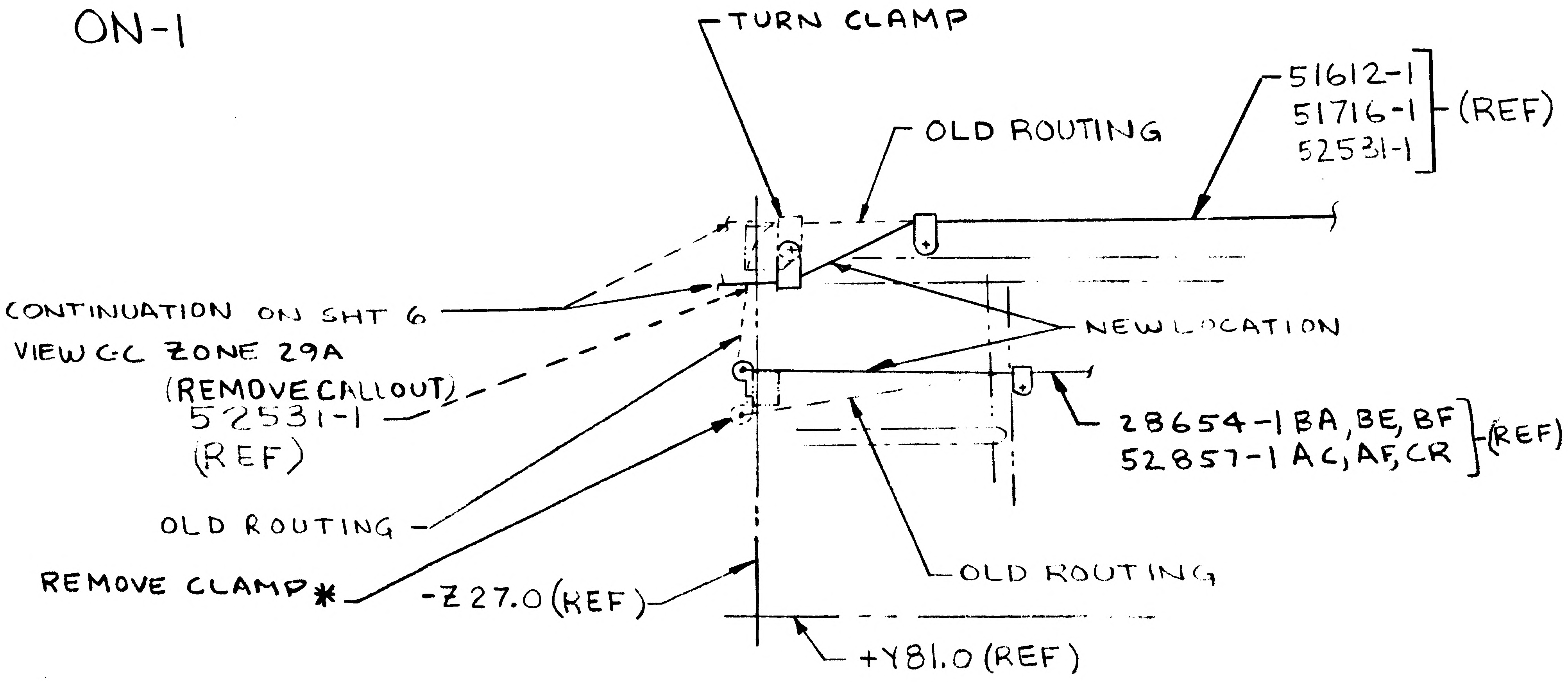
TURN CLAMP
OLD ROUTING
51612-1
51716-1
52531-1
(REF)
CONTINUATION ON SHT 6
VIEW GC ZONE 29A
NEW LOCATION
(REMOVE CALLOUT)
52531-1
(REF)
28654-1BA,BE,BF
52857-1AC,AF,CR
(REF)
OLD ROUTING
REMOVE CLAMP*
-Z27.0 (REF)
OLD ROUTING
+Y81.0 (REF)

UPPER DECK, SH4, ZONE 7A

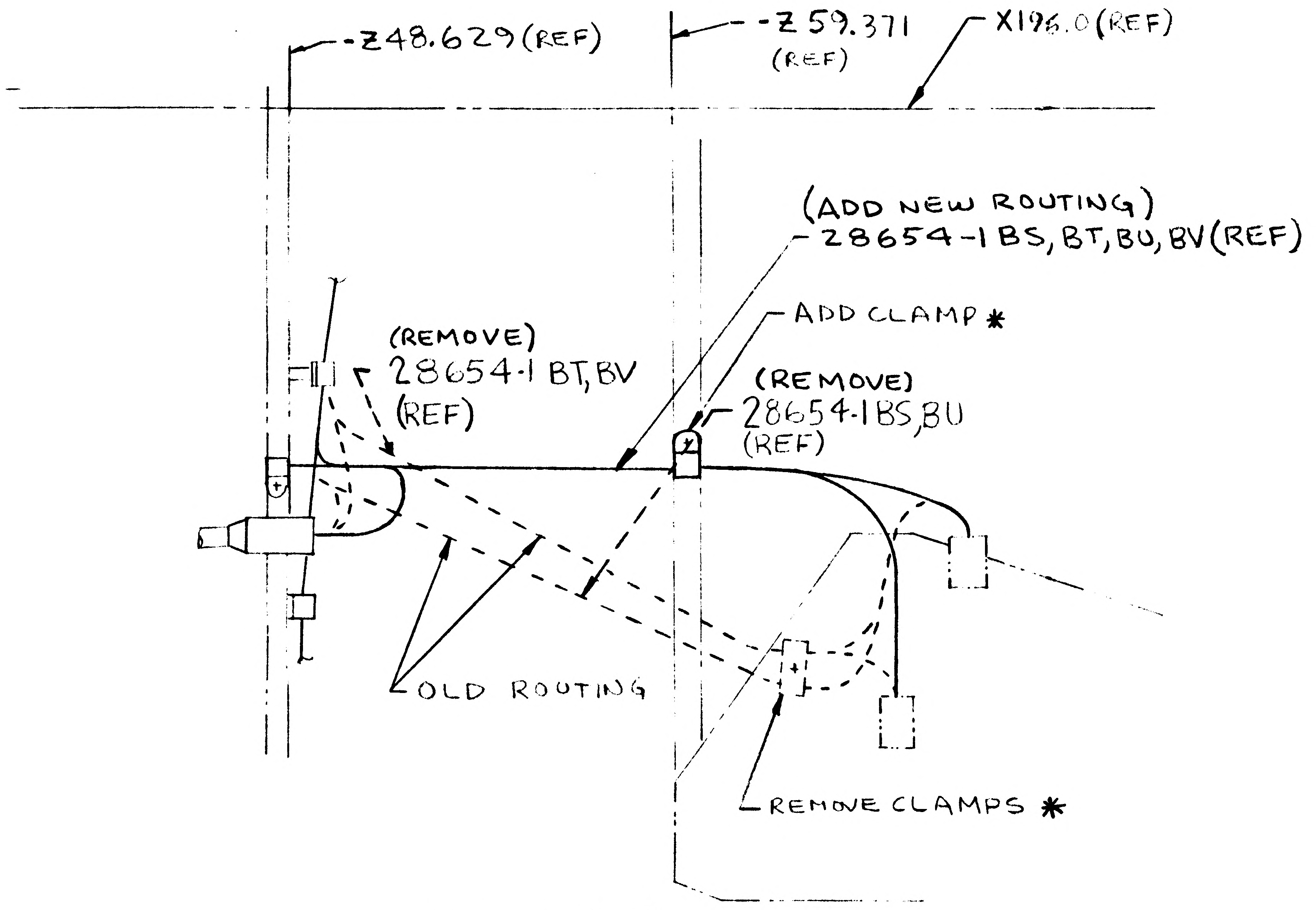
-Z48.629 (REF)
-Z59.371 (REF)
X196.0 (REF)
(ADD NEW ROUTING)
28654-1BS,BT,BU,BV(REF)
ADD CLAMP*
(REMOVE)
28654-1BT,BV
(REF)
(REMOVE)
28654-1BS,BU
(REF)
OLD ROUTING
REMOVE CLAMPS *

VIEW E-E
(ROTATED 180°)
SH 6, ZONE 33C

* GC500S CLAMPS PER
LPC 280-23

NOTE: WORK ACCOMPLISHED (5)

DETAIL SPEC REQ ☐ CL II ENGRG CHG ✓ CL I ENGRG CHG ☐

REASON FOR EO: REROUTED WIRING TO PREVENT CHAFING

DESCRIPTION OF EO: ON-1 REROUTED 28654-1BS, BT, BU, BV(REF), 52531-1(REF), 28654-1BA,BE,BF, 52857-1AC, AF, CR(REF) RELOCATED CLAMPS *

GAEC EO RELEASE: C 2/6/7

MODEL	PROCURING ACTIVITY NO	GAEC UNIT NO	SUB CONTR UNIT NO
LM		LM-2(32)	

DRAWING CHANGE REQD: REVISE DWG ✓ RECORD EO
DISPOSITION OF PARTS: REWORK ✓ SCRAP

		VD1	SUPPORT	RELIAB. GROUP	GROUP LEADER	STRESS GROUP	LIAISON ENGRG	PROJ ENGRG
APPROVED BY			–	–	JW/CLC			
DATE	1	2/2/67			2-2-67		2-3-67	2/4/67

PRIORITY: C
DRAWING TITLE: LINES INSTL ELEC D/S
DRAWING NO. LDW280-52607
EO NO. A8

ISSUED BY REBERLE X 7033 SECTION VD1 (EQUIP LINES) GROUP NO. 332 P. 35

ENG 32.1 REV 3-65

GRUMMAN AIRCRAFT ENGINEERING CORP.
CODE IDENT NO. 26512

ENGINEERING ORDER

DWG NO LDW280-52607	EO NO. A9
CONTROL INFO NO. LDW280A5286	

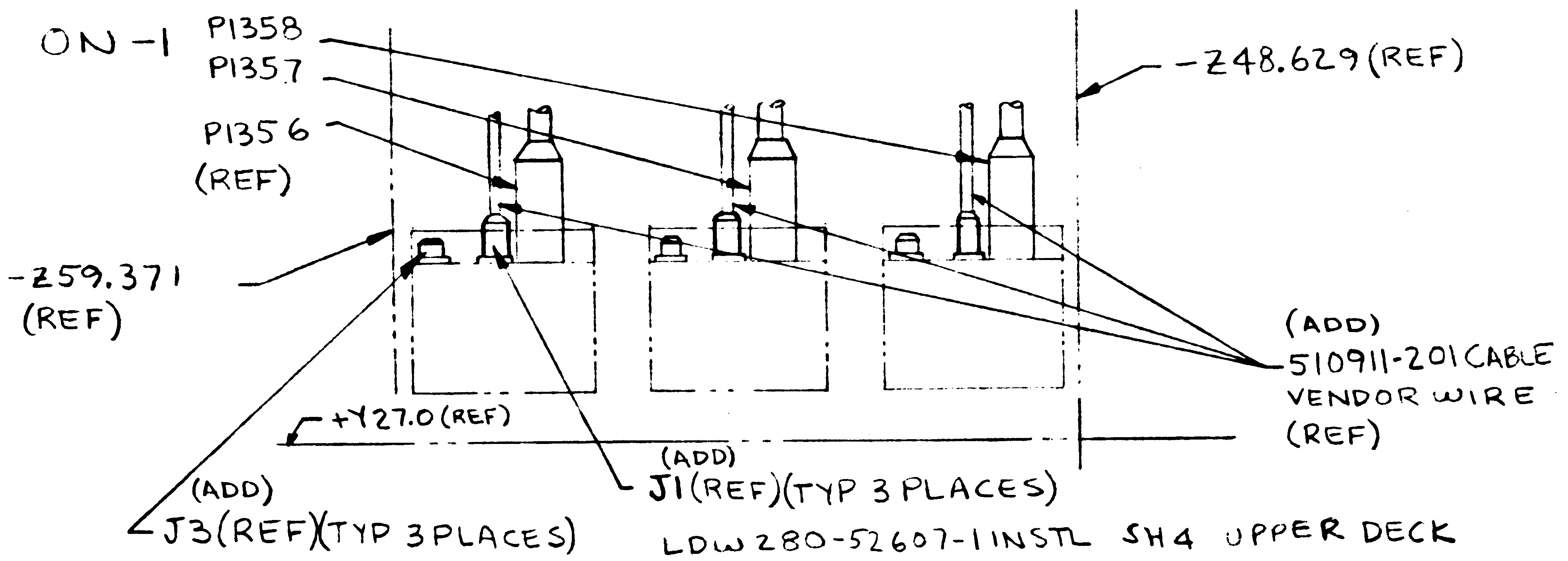
ON-1
P1358
P1357
P1356
(REF)
-Z48.629 (REF)
-Z59.371
(REF)
+Y27.0 (REF)
(ADD)
510911-201 CABLE
VENDOR WIRE
(REF)
(ADD)
J1 (REF) (TYP 3 PLACES)
(ADD)
J3 (REF) (TYP 3 PLACES)

LDW 280-52607-1 INSTL SH4 UPPER DECK

(5)

DETAIL SPEC REQ	☐	CL II ENGRG CHG	☑	CL I ENGRG CHG	☐

REASON FOR EO: CLARIFICATION FOR CONNECTING PLUGS

DESCRIPTION OF EO: ON-1 ADDED J1 (REF) (TYP 3 PLACES), J3 (REF) (TYP 3 PLACES), 510911-201 (GFE) CABLE VENDOR WIRE (REF)

GAEC EO RELEASE: C 2/6/7

MODEL	EFFECTIVITY		
	PROCURING ACTIVITY NO.	GAEC UNIT NO	SUB CONTR UNIT NO
LM		LM-2 (32)	

DRAWING CHANGE REQD		DISPOSITION OF PARTS		APPROVED BY								
✓		✓		DATE	1/27/67			1-27-67	1/27/67		2-3-67	2/4/67
REVISE DWG	RECORD EO	REWORK	SCRAP	1	VDI	SUPPORT	RELIAB GROUP	GROUP LEADER	STRESS GROUP	LIAISON ENGRG	PROJ ENGRG	

PRIORITY	DRAWING TITLE	DRAWING NO	EO NO
C	LINES INSTALLATION ELECTRONIC DESCENT STAGE	LDW280-52607	A9

ISSUED BY R. EBERLE X1441 SECTION VDI (EQUIP LINES) GROUP NO. 332 PL 35

01 NAS 9-1100

C

ENG 32.1 REV 3-63

GRUMMAN AIRCRAFT ENGINEERING CORP.
CODE IDENT NO. 26512
ENGINEERING ORDER

*

DWG NO. LDW280-52607 | EO NO. B1
CONTROL INFO NO. LDW280A 5569

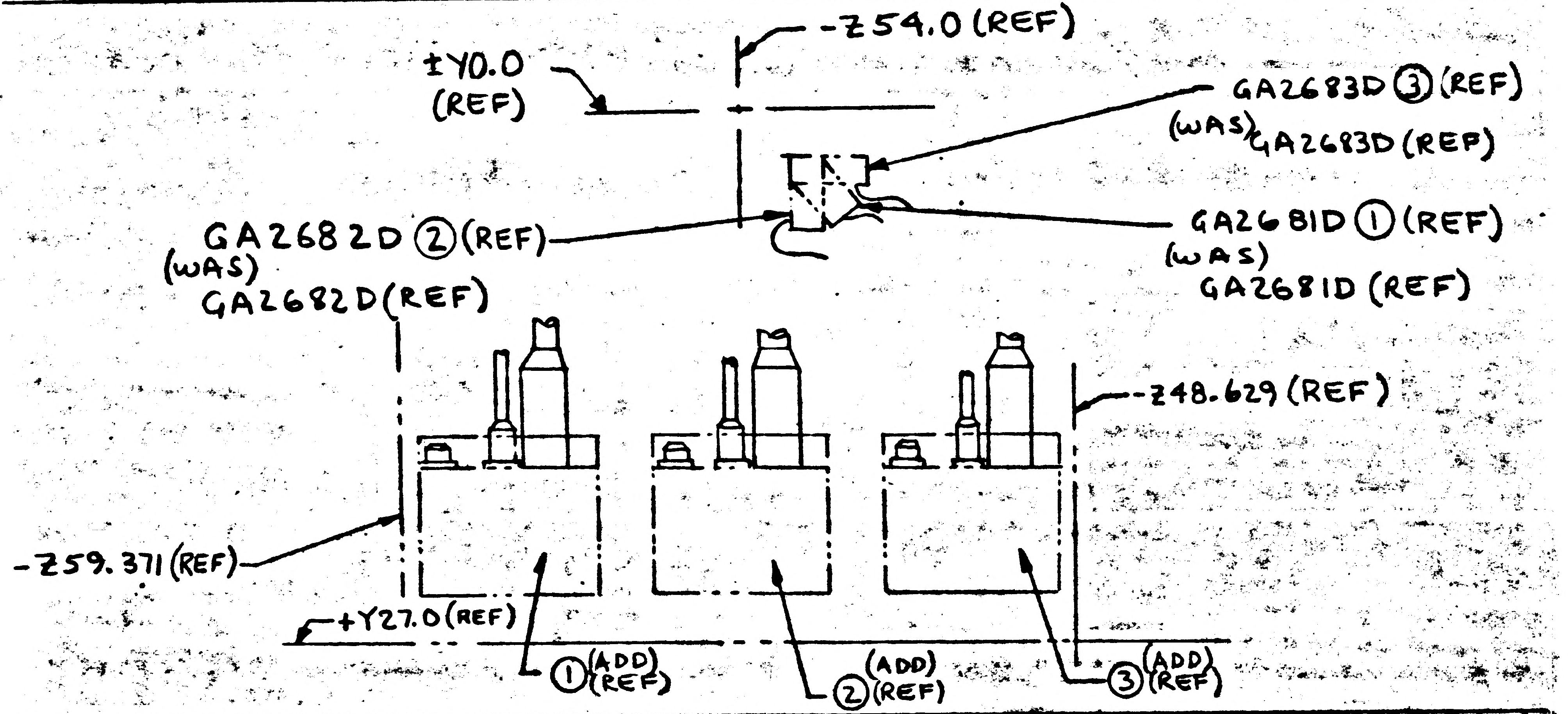

-Z54.0 (REF)
±Y0.0 (REF)
GA2683D ③ (REF)
(WAS) GA2683D (REF)
GA2682D ② (REF)
(WAS) GA2682D (REF)
GA2681D ① (REF)
(WAS) GA2681D (REF)
-Z48.629 (REF)
-Z59.371 (REF)
+Y27.0 (REF)
① (ADD) (REF)
② (ADD) (REF)
③ (ADD) (REF)

DETAIL SPEC REQ ☐ | CL II ENGRG CHG ☑ | CL I ENGRG CHG ☐

REASON FOR EO: IDENTIFICATION OF PARTS TO INSURE PROPER HOOK UP

DESCRIPTION OF EO: ON -1 INSTL ADDED ①, ② & ③ TO PICTURE, GA2681D ① (REF) WAS GA2681D (REF), GA2682 ② (REF) WAS GA2682D (REF) GA2683D ③ (REF) WAS GA2683D (REF)

C/ⓔ GAEC C EO RELEASE: FR 2/23/7

MODEL	PROCURING ACTIVITY NO.	GAEC UNIT NO.	SUB CONTR UNIT NO.
LM		LM-2 (32)	

DRAWING CHANGE REQD		DISPOSITION OF PARTS		APPROVED BY									
✓		NOT	REQD	DATE	2/16/67			2/16/67	2/17/67		2/21/67	2/22/67
REVISE DWG	RECORD EO	REWORK	SCRAP	6	VD1	SUPPORT	RELIAB GROUP	GROUP LEADER	STRESS GROUP	LIAISON ENGRG	PROJ ENGRG	GOVT

PRIORITY: C
DRAWING TITLE: LINES INSTL ELEC D/S
DRAWING NO.: LDW280-52607
EO NO.: B1

ISSUED BY R. EBERLE X7033 SECTION VD1 (EQUIP LINES) GROUP NO. 332 PL35

B

ENG 32.2 REV 3-65

GRUMMAN AIRCRAFT ENGINEERING CORP.
CODE IDENT NO. 26512
ENGINEERING ORDER

DWG. NO. LDW280-52607 | EO NO. B2
CONTROL INFO NO. LM-S- 11892

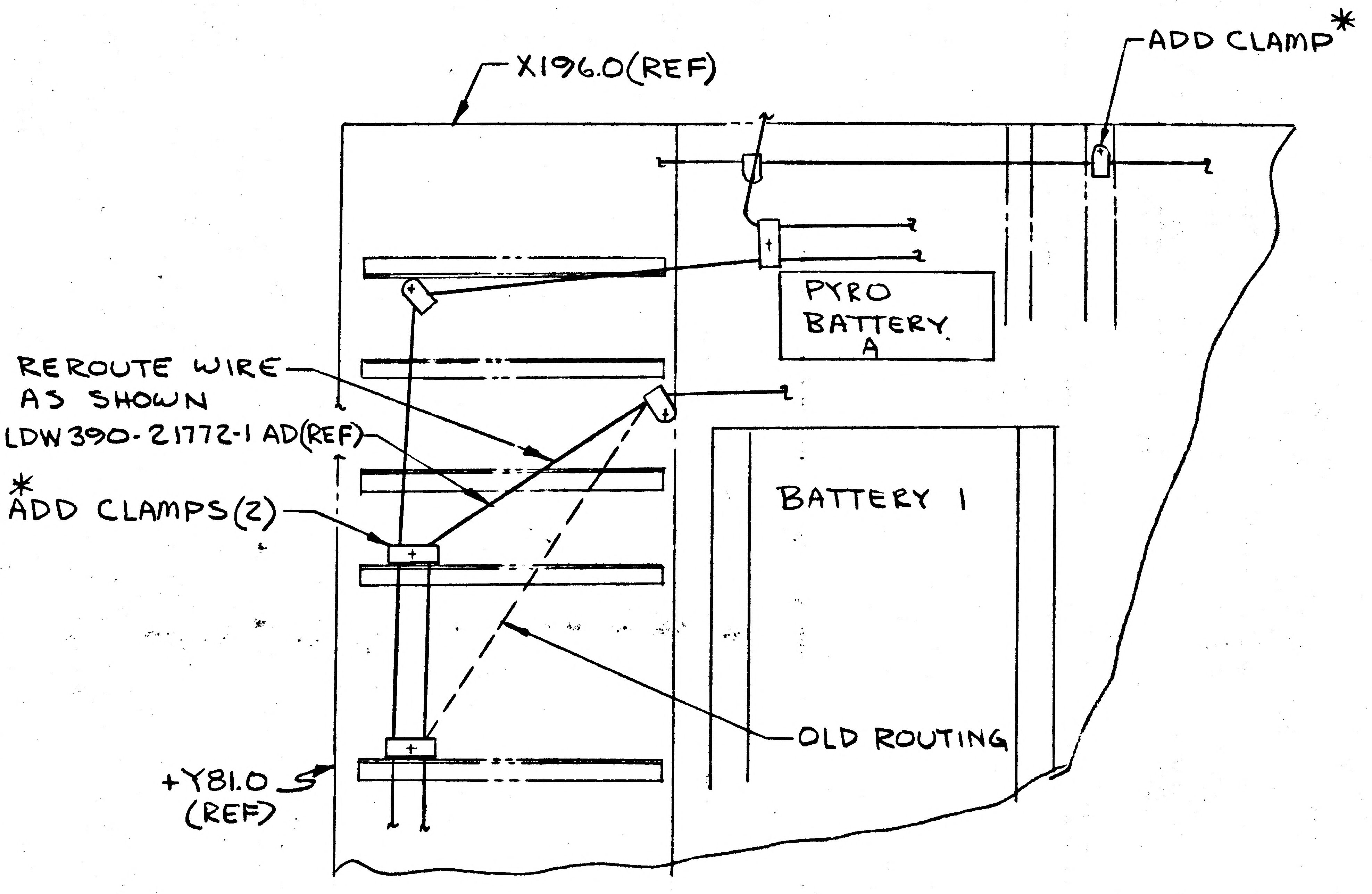

X196.0(REF)
ADD CLAMP*
PYRO BATTERY A
REROUTE WIRE AS SHOWN LDW390-21772-1 AD(REF)
*ADD CLAMPS(2)
BATTERY 1
OLD ROUTING
+Y81.0 (REF)

VIEW S-S
ZONE 49A SH7
LDW280-52607-1 INSTL

RELEASED BY LIAISON

*ALL CLAMP INSTL PER LPC280-23(REF)

DETAIL SPEC REQ		CL II ENGRG CHG		CL I ENGRG CHG	

REASON FOR EO: TO PROVIDE SUPPORT FOR WIRING

DESCRIPTION OF EO: ON-1 ADDED 3 CLAMPS AND REROUTED WIRES

GAEC EO RELEASE C

MODEL	PROCURING ACTIVITY NO.	GAEC UNIT NO.	SUB CONTR UNIT NO.
LM		LM-2 (32)	

DRAWING CHANGE REQD: REVISE DWG	RECORD EO	DISPOSITION OF PARTS: REWORK	SCRAP
✓		✓	

APPROVED BY	WT			~		CH	RMC	
DATE	2/24/67			~	2/25/67	2-25	3-2-67	2-27-67
1	VD1	SUPPORT	RELIAB. GROUP	GROUP LEADER	STRESS GROUP	LIAISON ENGRG	PROJ ENGRG	GOVT

PRIORITY	DRAWING TITLE	DRAWING NO.	EO NO.
C	LINES INSTALLATION DESCENT STAGE-ELECTRONICS	LDW280-52607	B2

ISSUED BY Tom Bianchi (7033) SECTION VD1 GROUP NO. 332 PL 35

01 NAS 9-1100

01

NAS 9-1100

B

ENG 32.2 REV 3-65

GRUMMAN AIRCRAFT ENGINEERING CORP.
CODE IDENT NO. 26512
ENGINEERING ORDER

DWG. NO.	LDW280-52607	EO NO.	B3
CONTROL INFO NO.	LM5-12489		

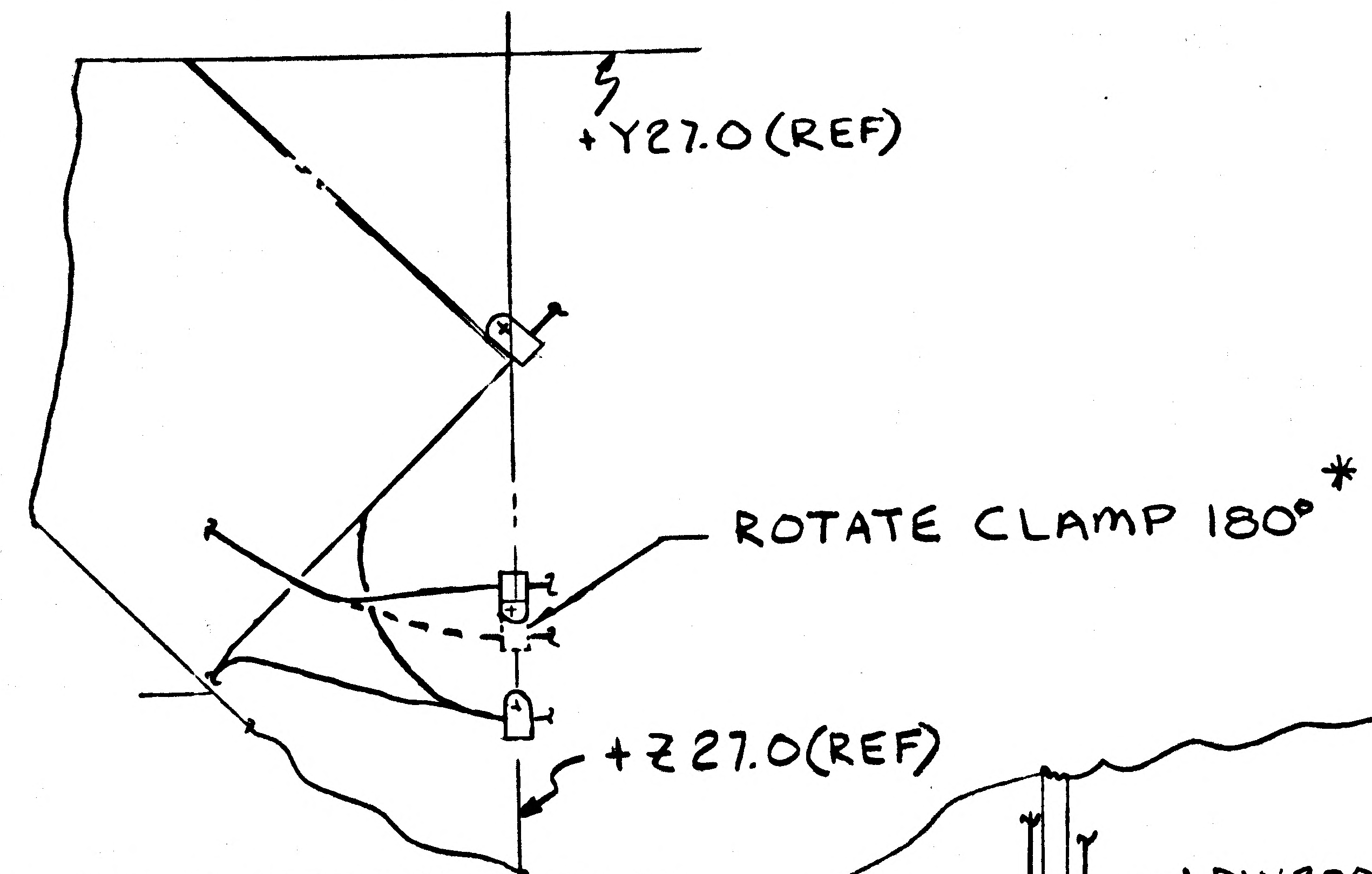
+Y27.0 (REF)
ROTATE CLAMP 180° *
+Z27.0 (REF)

VIEW OF BOTTOM DECK
SHS ZONE 20A

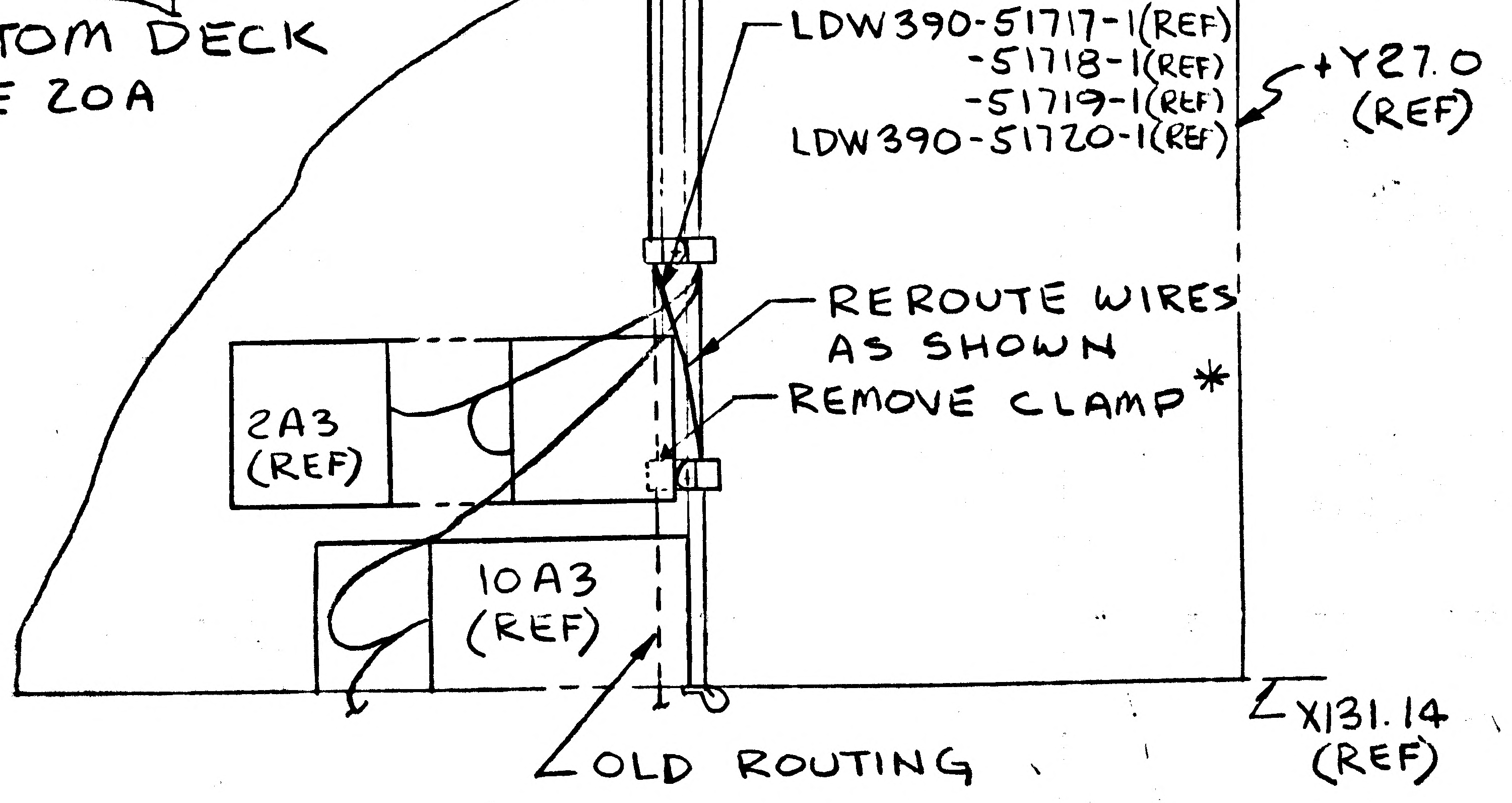
LDW390-51717-1 (REF)
-51718-1 (REF)
-51719-1 (REF)
LDW390-51720-1 (REF)
+Y27.0 (REF)
REROUTE WIRES AS SHOWN
REMOVE CLAMP *
2A3 (REF)
10A3 (REF)
OLD ROUTING
X131.14 (REF)

VIEW S-S
(SH7 ZONE 49A)

*ALL CLAMP INSTL PER LPC280-23 (REF)

RELEASED BY LIAISON

DETAIL SPEC REQ		CL II ENGRG CHG		CL I ENGRG CHG	

REASON FOR EO	DESCRIPTION OF EO	GAEC EO RELEASE
TO PREVENT CHAFING	ON-1 REROUTED CABLES	Ⓟ C

MODEL	PROCURING ACTIVITY NO.	GAEC UNIT NO.	SUB CONTR UNIT NO.	DRAWING CHANGE REQD: REVISE DWG	RECORD EO	DISPOSITION OF PARTS: REWORK	SCRAP
LM		LM-2 (32)		✓		✓	

APPROVED BY					PJB	CH	RWC	
DATE					2/25/67	2-25	3-2-67	2-27-67
1	VDI	SUPPORT	RELIAB. GROUP	GROUP LEADER	STRESS GROUP	LIAISON ENGRG	PROJ ENGRG	GOVT

PRIORITY	DRAWING TITLE	DRAWING NO.	EO NO.
C	LINES INSTALLATION ELECTRICAL DESCENT STAGE	LDW280-52607	B3

ISSUED BY Tom Bianchi (7033)
SECTION VDI
GROUP NO. 332 PL 35

B

ENG 32.2 REV 3-65

GRUMMAN AIRCRAFT ENGINEERING CORP.
CODE IDENT NO. 26512
ENGINEERING ORDER

DWG. NO. LDW 280-52607		EO NO. B4
CONTROL INFO NO. LM-5-14003			

ON-1 ASSY

SHEET 4 – ZONE 6D, 6E

REROUTE C/A 51993-1 AS SHOWN:

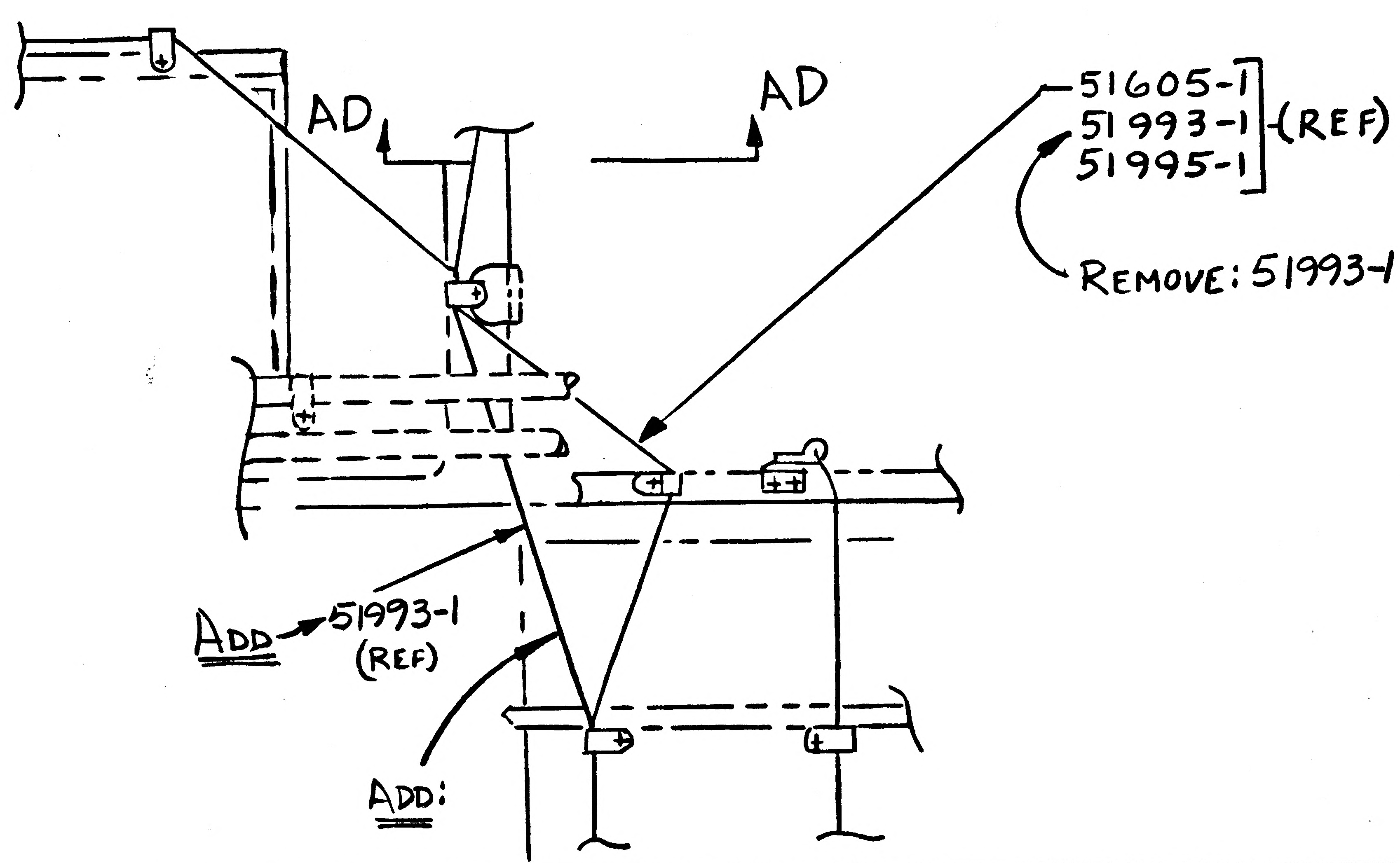
AD
AD
51605-1
51993-1
51995-1
(REF)
REMOVE: 51993-1
ADD
51993-1 (REF)
ADD:

SHEET 5.– ZONE 20A, 20B.

REROUTE C/A 51720-1 TO P459 AS SHOWN:

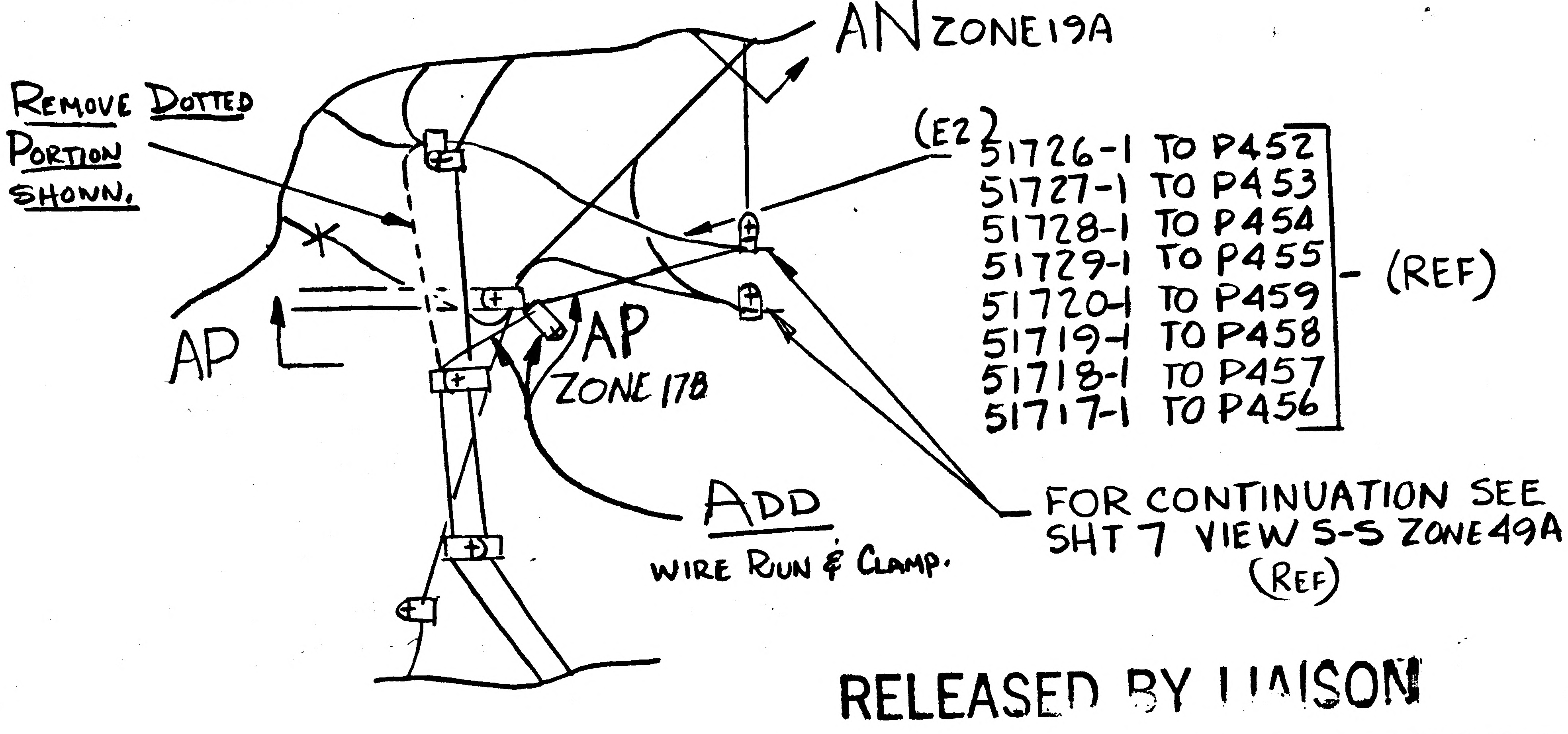
AN ZONE 19A
REMOVE DOTTED PORTION SHOWN.
(E2)
51726-1 TO P452
51727-1 TO P453
51728-1 TO P454
51729-1 TO P455
51720-1 TO P459
51719-1 TO P458
51718-1 TO P457
51717-1 TO P456
(REF)
AP
AP ZONE 17B
ADD WIRE RUN & CLAMP.
FOR CONTINUATION SEE SHT 7 VIEW S-S ZONE 49A (REF)

RELEASED BY LIAISON

DETAIL SPEC REQ		CL II ENGRG CHG		CL I ENGRG CHG		5

REASON FOR EO: REROUTE OF C/A 51993-1 & 51720 NEEDED. CABLES SHORT.

DESCRIPTION OF EO: ON-1 ASSY SHEET 4. REROUTED C/A 51993-1. SHEET 5 - REROUTED C/A 51720-1

GAEC EO RELEASE: JK

MODEL	PROCURING ACTIVITY NO.	GAEC UNIT NO.	SUB CONTR UNIT NO.
LM		LM-2 (52)	

DRAWING CHANGE REQD		DISPOSITION OF PARTS		APPROVED BY	JW	—	—	—	DV	CR	RMC	
✓		✓		DATE	3/21/67				3/8/67	3-8-67	3-10-67	3-8-67
REVISE DWG	RECORD EO	REWORK	SCRAP	1	VDI	SUPPORT	RELIAB. GROUP	GROUP LEADER	STRESS GROUP	LIAISON ENGRG	PROJ ENGRG	GOVT

PRIORITY	DRAWING TITLE	DRAWING NO.	EO NO.
C	LINES INSTALLATION- ELECT. DESCENT STAGE	LDW280-52607	B4

ISSUED BY C. RISSLAND X6216 SECTION VDI GROUP NO.____ PL____

01 NAS 9-1100

01

NAS 9-1100

ENG ~~RE~~B RELEASED BY LIAISON

GRUMMAN AIRCRAFT ENGINEERING CORP.
CODE IDENT NO. 26512
ENGINEERING ORDER

DWG. NO. LDW280-52607		EO NO. B5	
CONTROL INFO NO. LM5-12555			

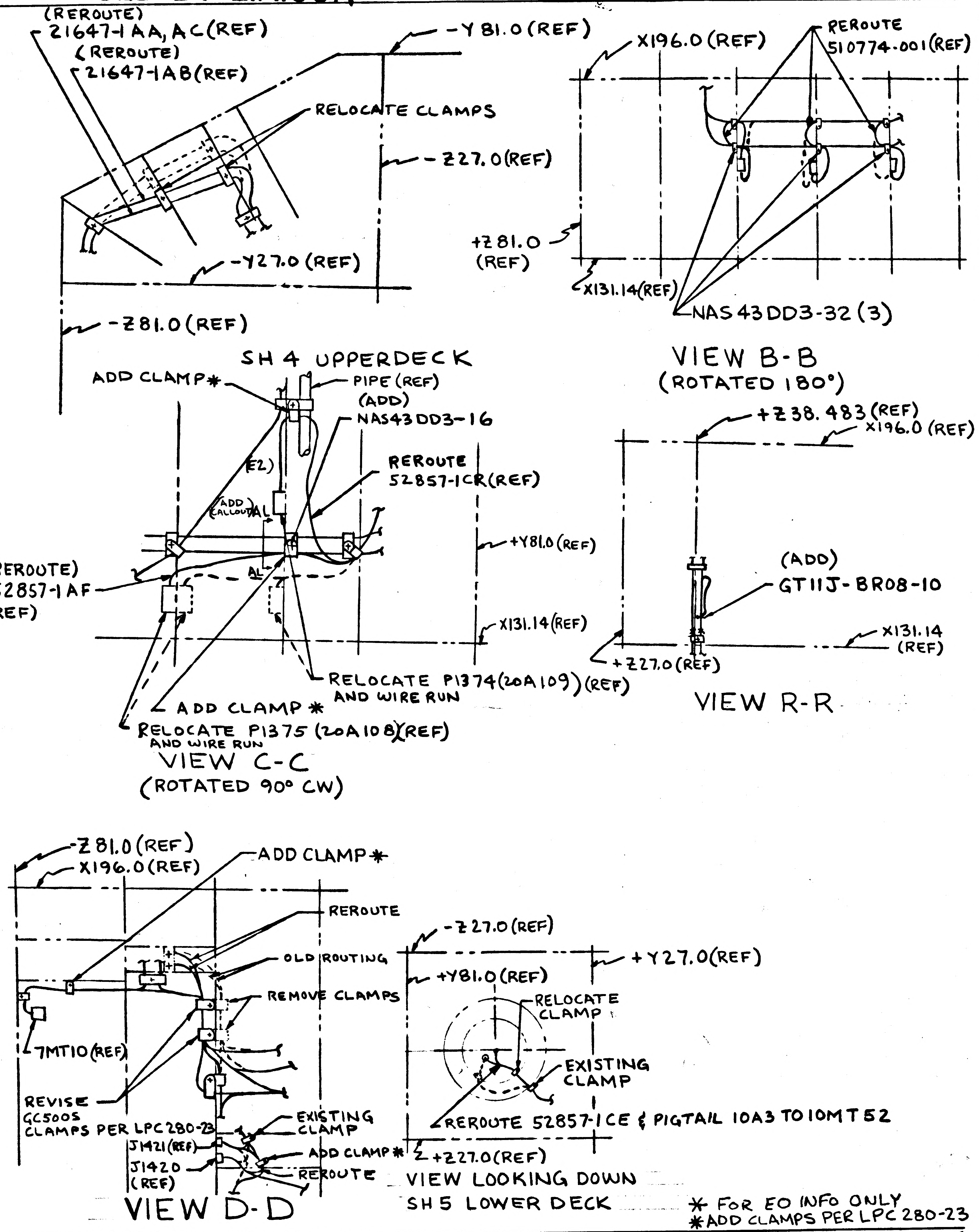
(REROUTE)
21647-1AA, AC (REF)
(REROUTE)
21647-1AB (REF)
-Y81.0 (REF)
RELOCATE CLAMPS
-Z27.0 (REF)
+Z81.0 (REF)
-Y27.0 (REF)
-Z81.0 (REF)
X196.0 (REF)
REROUTE
510774-001 (REF)
X131.14 (REF)
NAS43DD3-32 (3)
VIEW B-B
(ROTATED 180°)
SH 4 UPPERDECK
ADD CLAMP*
PIPE (REF)
(ADD)
NAS43DD3-16
(ADD CALLOUT)
REROUTE
52857-1CR (REF)
+Y81.0 (REF)
(REROUTE)
52857-1AF
(REF)
X131.14 (REF)
RELOCATE P1374 (20A109) (REF)
AND WIRE RUN
ADD CLAMP*
RELOCATE P1375 (20A108) (REF)
AND WIRE RUN
VIEW C-C
(ROTATED 90° CW)
+Z38.483 (REF)
X196.0 (REF)
(ADD)
GT11J-BR08-10
X131.14
(REF)
+Z27.0 (REF)
VIEW R-R
-Z81.0 (REF)
-X196.0 (REF)
ADD CLAMP*
REROUTE
OLD ROUTING
REMOVE CLAMPS
7MT10 (REF)
REVISE
GC500S
CLAMPS PER LPC280-23
J1421 (REF)
J1420
(REF)
EXISTING
CLAMP
ADD CLAMP*
REROUTE
VIEW D-D
-Z27.0 (REF)
+Y27.0 (REF)
+Y81.0 (REF)
RELOCATE
CLAMP
EXISTING
CLAMP
REROUTE 52857-1CE & PIGTAIL 10A3 TO 10MT52
+Z27.0 (REF)
VIEW LOOKING DOWN
SH 5 LOWER DECK

* FOR EO INFO ONLY
*ADD CLAMPS PER LPC 280-23

DETAIL SPEC REQ	☐	CL II ENGRG CHG	☒	CL I ENGRG CHG	☐	LCR 1077								5
REASON FOR EO REROUTE WIRES AND ADD SPACERS TO PREVENT CHAFING				DESCRIPTION OF EO ON-INSTL REMOVED CLAMPS RELOCATED CLAMPS REROUTED 21647-1AA,AB,AC,(REF),510774-001(REF),52857-1CR,AF,CE (REF), PIGTAIL 10A3 TO 10MT52, WIRE FROM WATER TANK TO 7A8, ADDED CLAMPS *, NAS43DD3-32 (3) NAS43DD3-16, GT11J-BR08-10										GAEC EO RELEASE JK
MODEL	EFFECTIVITY PROCURING ACTIVITY NO.	GAEC UNIT NO.	SUB CONTR UNIT NO.	DRAWING CHANGE REQD		DISPOSITION OF PARTS		APPROVED BY	WT			JFJ	CH	RWC (EW)
								DATE	3-8-67			3-8-67	3-7-67	3-10-67
LM		LM-2 (32)		✓ REVISE DWG	RECORD EO	✓ REWORK	SCRAP	1	VDI	SUPPORT	RELIAB. GROUP	GROUP LEADER	STRESS GROUP	LIAISON ENGRG
				PRIORITY C	DRAWING TITLE LINES INSTALLATION ELECTRONIC DESCENT STAGE						DRAWING NO. LDW280-52607			EO NO. B5

PROJ ENGRG 3.8.67 ~~GOVT~~

ISSUED BY R. EBERLE X7033 SECTION VDI (EQUIP LINES) GROUP NO. 332 PL. 35

β *

ENG 32.2 REV 3-66

GRUMMAN AIRCRAFT ENGINEERING CORP.
CODE IDENT NO. 26512
ENGINEERING ORDER

DWG. NO. LDW280-52607		EO NO. B6	
CONTROL INFO NO. LM-5-14014			

THIS IS A REVISION TO EO B5

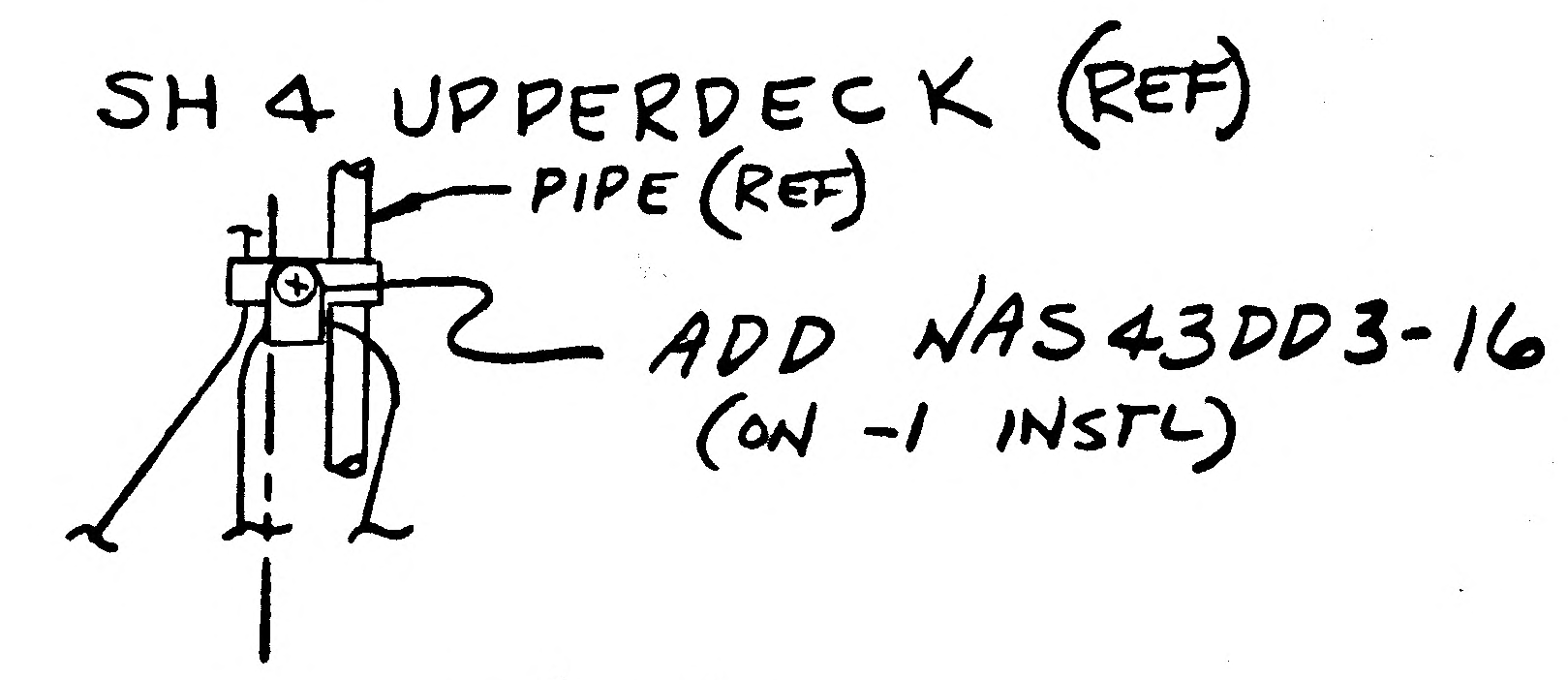

SH 4 UPPERDECK (REF)
PIPE (REF)
ADD NAS43DD3-16
(ON -1 INSTL)

VIEW C-C (REF)
(ROTATED 90° CW)

THIS IS A REVISION TO EO AB

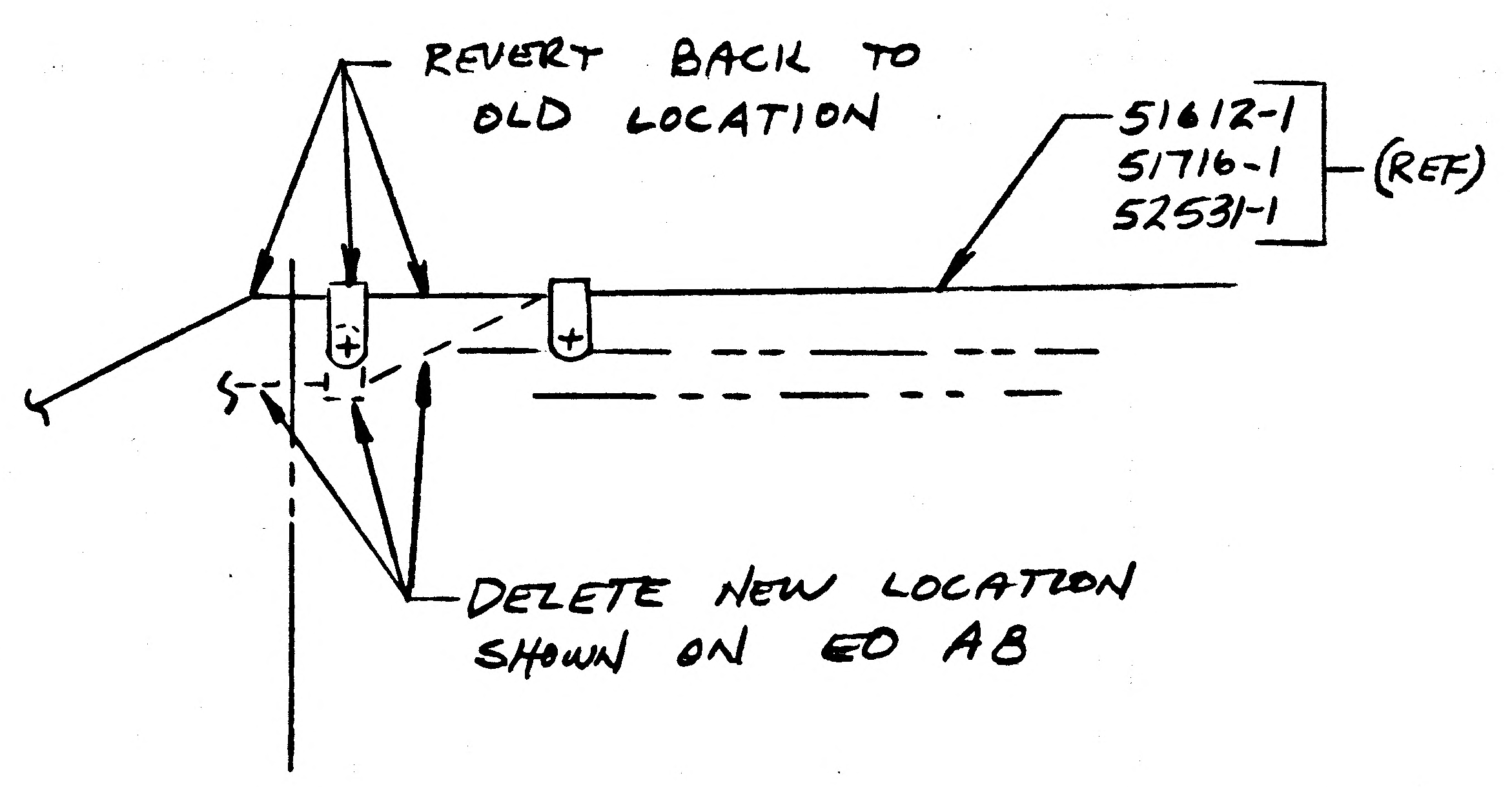

REVERT BACK TO OLD LOCATION
51612-1
51716-1
52531-1
(REF)
DELETE NEW LOCATION SHOWN ON EO AB

DETAIL SPEC REQ		CL II ENGRG CHG		CL I ENGRG CHG		

REASON FOR EO: TO PREVENT CHAFING

DESCRIPTION OF EO:
ON -1
(REF EO B5) ADDED NAS43DD3-16
(REF EO AB) REVERTED BACK TO ORIGINAL ROUTING ON 51612-1, 51716-1, & 52531-1

GAEC EO RELEASE: JK

MODEL	PROCURING ACTIVITY NO.	GAEC UNIT NO.	SUB CONTR UNIT NO.
LM		LM-2(32)	

DRAWING CHANGE REQD		DISPOSITION OF PARTS	
REVISE DWG	RECORD EO	REWORK	SCRAP
✓		✓	

			SUPPORT	RELIAB. GROUP	GROUP LEADER	STRESS GROUP	LIAISON ENGRG	PROJ ENGRG	GOVT
APPROVED BY						JF	EW	RMc	el
DATE	1					3-11-67	3/11/67	3-11-67	3-11-67

PRIORITY	DRAWING TITLE	DRAWING NO.	EO NO.
C	LINES INSTALLATION ELECTRONIC DESCENT STAGE	LDW280-52607	B6

ISSUED BY LIAISON EV BERGEMAN SECTION VDI (EQUIP LINES) GROUP NO. 332 PL 35

01

NAS 9-1100

RELEASED ~~BY~~ LIAISON

ENG 32.2 REV 3-65

GRUMMAN AIRCRAFT ENGINEERING CORP.
CODE IDENT NO. 26512
ENGINEERING ORDER

DWG. NO. LDW280-52607
EO NO. B7
CONTROL INFO NO. LM5 -11982

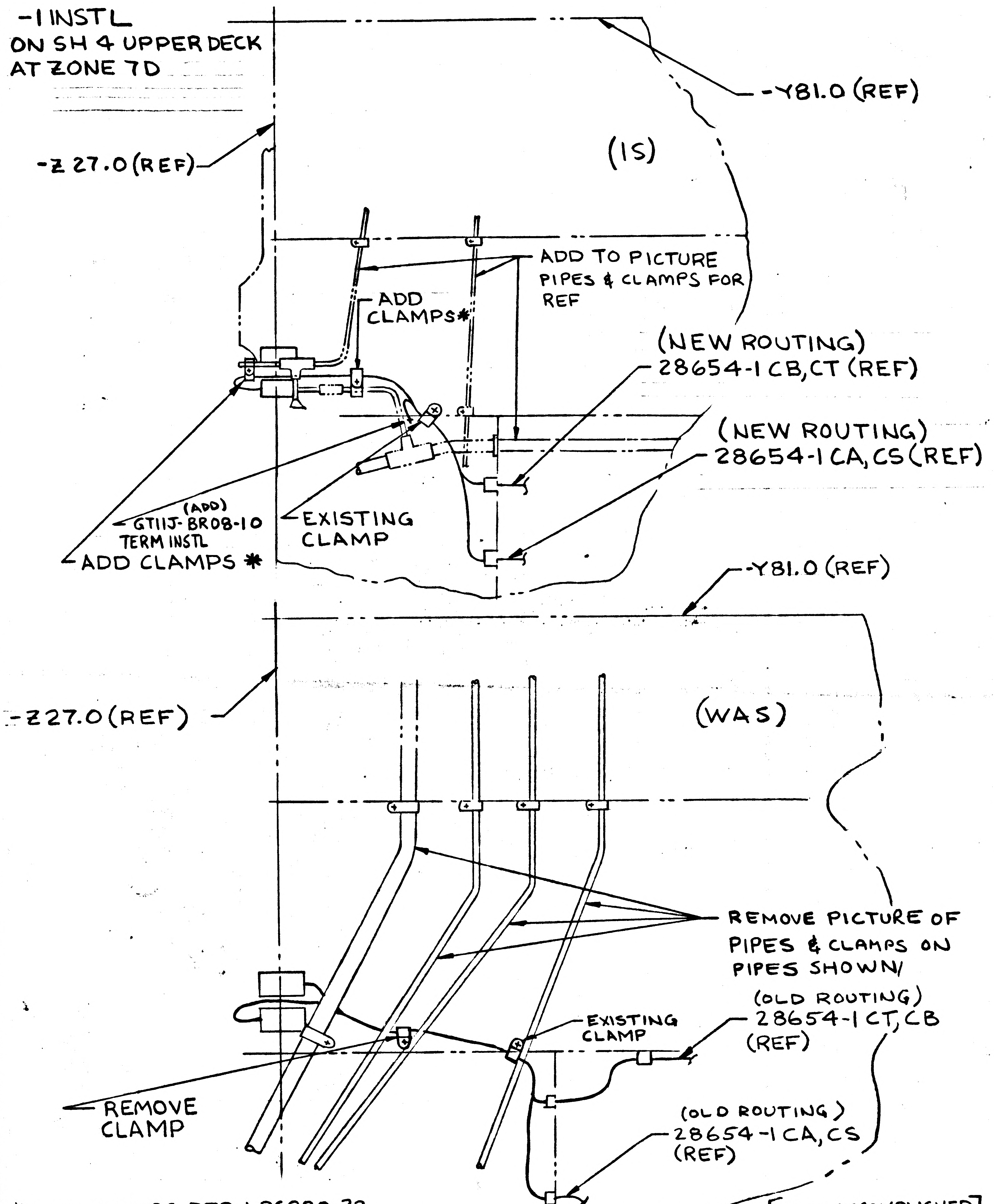

-1 INSTL
ON SH 4 UPPER DECK
AT ZONE 7D
-Y81.0 (REF)
-Z 27.0 (REF)
(IS)
ADD TO PICTURE PIPES & CLAMPS FOR REF
ADD CLAMPS*
(NEW ROUTING) 28654-1CB, CT (REF)
(NEW ROUTING) 28654-1CA, CS (REF)
(ADD) GT11J-BR08-10 TERM INSTL
EXISTING CLAMP
ADD CLAMPS *
-Y81.0 (REF)
-Z27.0 (REF)
(WAS)
REMOVE PICTURE OF PIPES & CLAMPS ON PIPES SHOWN
EXISTING CLAMP
(OLD ROUTING) 28654-1CT, CB (REF)
REMOVE CLAMP
(OLD ROUTING) 28654-1CA, CS (REF)

*ADD CLAMPS PER LPC280-23

WORK ACCOMPLISHED

DETAIL SPEC REQ	☐	CL II ENGRG CHG	☒	CL I ENGRG CHG	☐	LCR19-1077									5

REASON FOR EO: REROUTED EXISTING WIRES TO PREVENT CHAFING

DESCRIPTION OF EO: ON-1INSTL ZONE 7D SH4 ADDED PICTURE OF CLAMPS, REVISED WIRE ROUTING FOR 28654-1 CA, CS (REF) & 28654-1CB, CT (REF) REMOVED CLAMP, ADDED GT11J-BR08-10 TERM INSTL

GAEC EO RELEASE: JK

MODEL	PROCURING ACTIVITY NO.	GAEC UNIT NO.	SUB CONTR UNIT NO.
LM		LM-2 (32)	

DRAWING CHANGE REQD: REVISE DWG ✓ RECORD EO
DISPOSITION OF PARTS: REWORK ✓ SCRAP

APPROVED BY	WT			~			WP	
DATE	3/10/67			~	3-14-67	3-14-67	3-10-67	3/14/67
/	VDI	SUPPORT	RELIAB. GROUP	GROUP LEADER	STRESS GROUP	LIAISON ENGRG	PROJ ENGRG	~~GOVT~~

PRIORITY: C
DRAWING TITLE: LINES INSTALLATION ELECTRONIC DESCENT STAGE
DRAWING NO.: LDW280-52607
EO NO.: B7

ISSUED BY R.EBERLE, ROSADO x6522 SECTION VDI (EQUIP LINES) GROUP NO. 332 PL____

01
NAS 9-1100

* B

ENG 32.2 REV 3-65

GRUMMAN AIRCRAFT ENGINEERING CORP.
CODE IDENT NO. 26512
ENGINEERING ORDER

DWG. NO. LDW280-52607
EO NO. B8
CONTROL INFO NO. LM 5 - 13099

ON-1

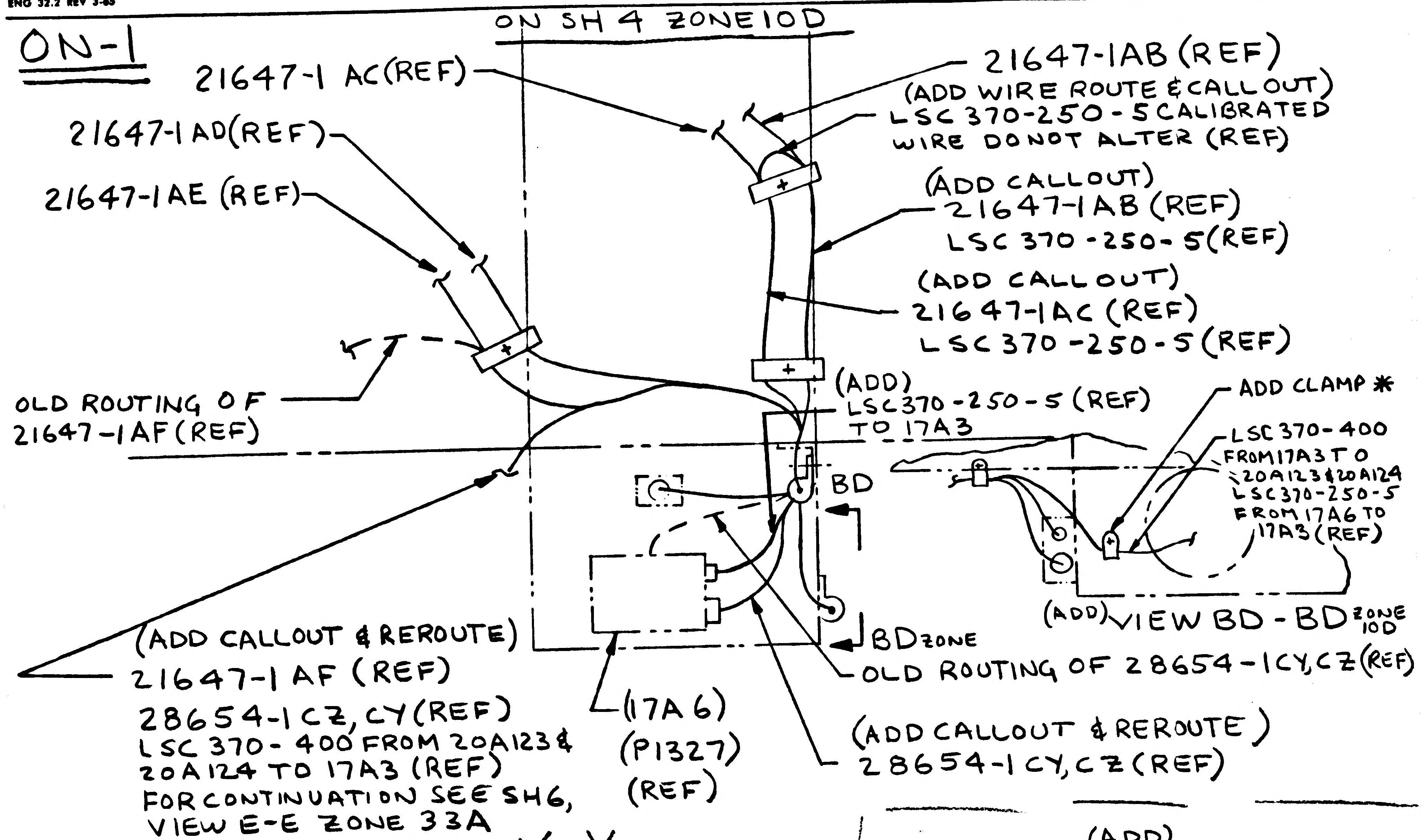
ON SH 4 ZONE 10D
21647-1 AC(REF)
21647-1 AD(REF)
21647-1 AE (REF)
21647-1AB (REF)
(ADD WIRE ROUTE & CALLOUT)
LSC 370-250-5 CALIBRATED WIRE DO NOT ALTER (REF)
(ADD CALLOUT)
21647-1AB (REF)
LSC 370-250-5(REF)
(ADD CALLOUT)
21647-1AC (REF)
LSC 370-250-5 (REF)
(ADD)
LSC370-250-5 (REF)
TO 17A3
OLD ROUTING OF 21647-1AF(REF)
BD
ADD CLAMP ✱
LSC 370-400 FROM 17A3 TO 20A123 & 20A124
LSC370-250-5 FROM 17A6 TO 17A3 (REF)
(ADD) VIEW BD-BD ZONE 10D
BD ZONE
OLD ROUTING OF 28654-1CY,CZ(REF)
(ADD CALLOUT & REROUTE)
21647-1 AF (REF)
28654-1CZ, CY(REF)
LSC 370-400 FROM 20A123 & 20A124 TO 17A3 (REF)
FOR CONTINUATION SEE SH6, VIEW E-E ZONE 33A
(17A6)
(P1327)
(REF)
(ADD CALLOUT & REROUTE)
28654-1CY,CZ(REF)

SECT X-X ZONE 8C

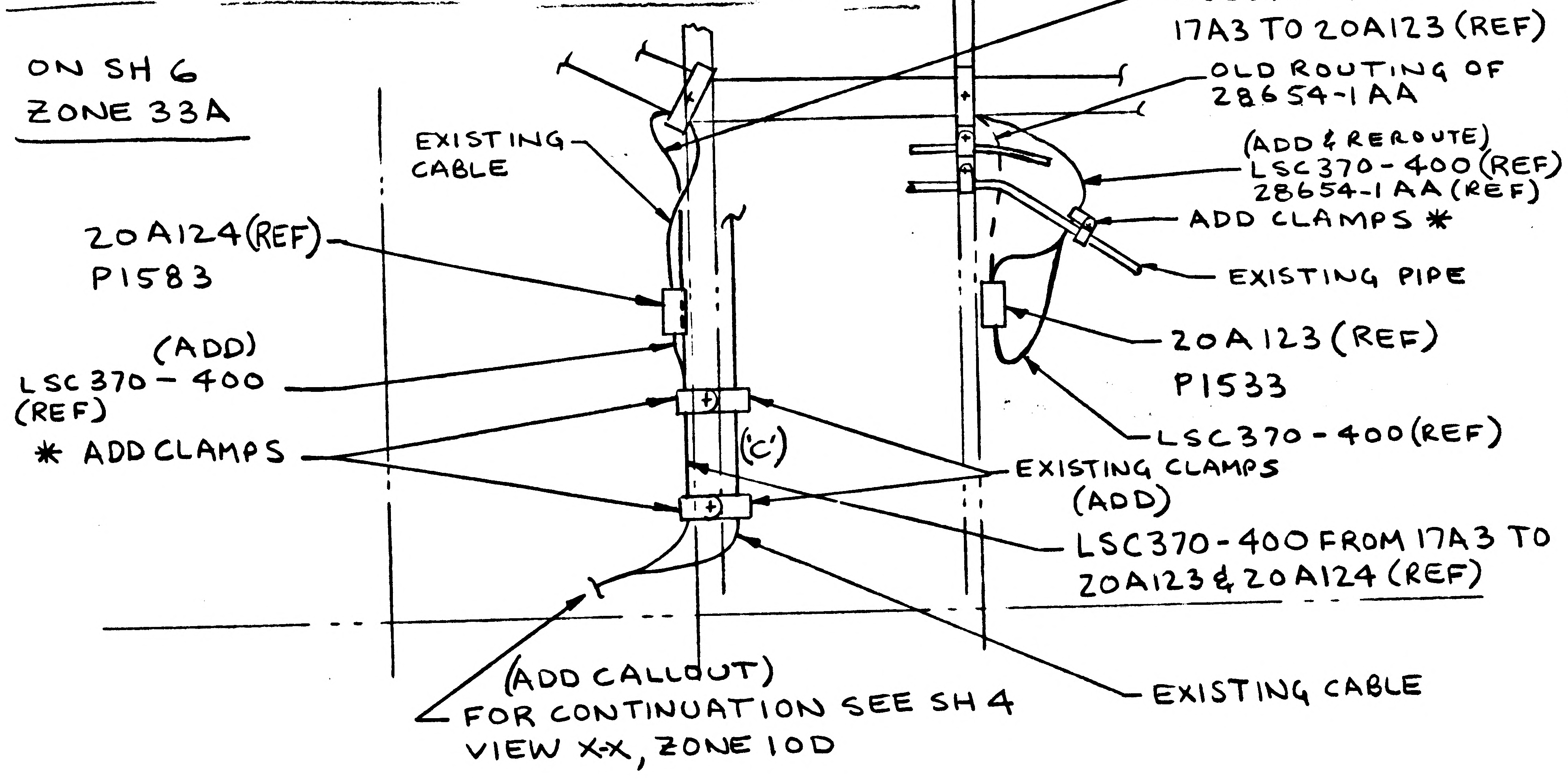
ON SH 6
ZONE 33A
EXISTING CABLE
20A124(REF)
P1583
(ADD)
LSC370-400
(REF)
✱ ADD CLAMPS
(C)
(ADD)
LSC370-400 FROM 17A3 TO 20A123 (REF)
OLD ROUTING OF 28654-1AA
(ADD & REROUTE)
LSC370-400 (REF)
28654-1AA (REF)
ADD CLAMPS ✱
EXISTING PIPE
20A123 (REF)
P1533
LSC370-400(REF)
EXISTING CLAMPS
(ADD)
LSC370-400 FROM 17A3 TO 20A123 & 20A124 (REF)
(ADD CALLOUT)
FOR CONTINUATION SEE SH 4
VIEW X-X, ZONE 10D
EXISTING CABLE

VIEW E-E
(ROTATED 180°)

RELEASED BY LIAISON

✱ ADD CLAMPS PER LPC280-23

DETAIL SPEC REQ	☐	CL II ENGRG CHG	☒	CL I ENGRG CHG	☐		GAEC EO RELEASE C

REASON FOR EO	DESCRIPTION OF EO	GAEC EO RELEASE
ADDITION OF INSTRUMENTATION CABLES	ON-1 NOTED	JK —

MODEL	PROCURING ACTIVITY NO.	GAEC UNIT NO.	SUB CONTR UNIT NO.	DRAWING CHANGE REQD: REVISE DWG	RECORD EO	DISPOSITION OF PARTS: REWORK	SCRAP
LM		LM-2 (32)		✓		✓	

				GROUP LEADER	STRESS GROUP	LIAISON ENGRG	PROJ ENGRG	~~GOVT~~
APPROVED BY	WT			~	MBF	CH	RMC	[illegible]
DATE	4/4/67			~	4/4/67	4-4-67	4-7-67	4/5/67
1	VDI	SUPPORT	RELIAB. GROUP					

PRIORITY C
DRAWING TITLE LINES INSTALLATION ELECTRONIC DESCENT STAGE
DRAWING NO. LDW280-52607
EO NO. B8

ISSUED BY R. EBERLE, ROSADO 6522
SECTION VDI (EQUIP LINES)
GROUP NO. 332
PL 5

01
NAS 9-1100

ENG 32.2 REV 3-65

GRUMMAN AIRCRAFT ENGINEERING CORP.
CODE IDENT NO. 26512
ENGINEERING ORDER

DWG. NO. LDW280-52607		EO NO. C1
CONTROL INFO NO. LDW280A7136		

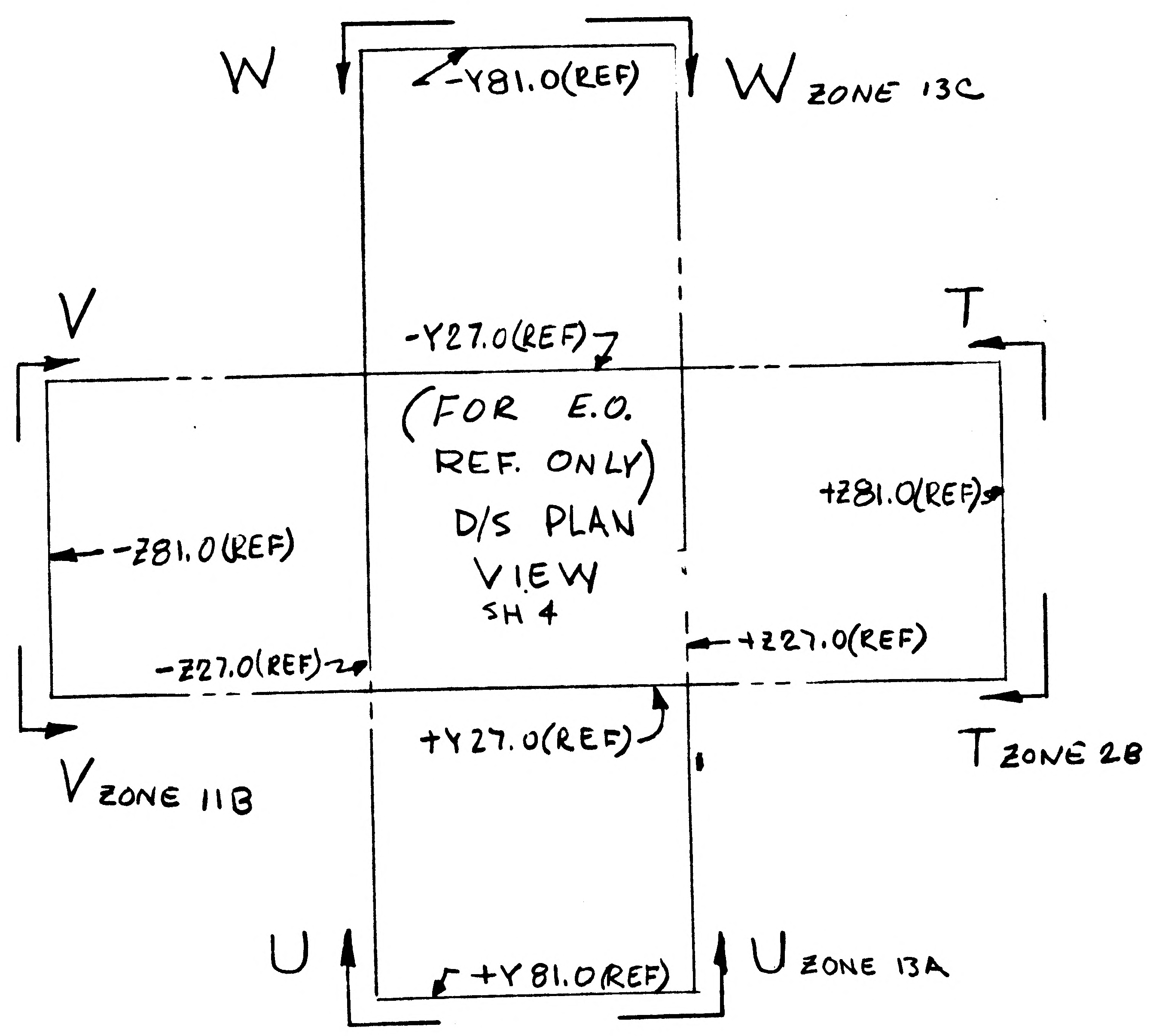

W
-Y81.0(REF)
W ZONE 13C
V
-Y27.0(REF)
T
(FOR E.O. REF. ONLY) D/S PLAN VIEW SH 4
-Z81.0(REF)
+Z81.0(REF)
-Z27.0(REF)
+Z27.0(REF)
+Y27.0(REF)
V ZONE 11B
T ZONE 2B
U
+Y81.0(REF)
U ZONE 13A

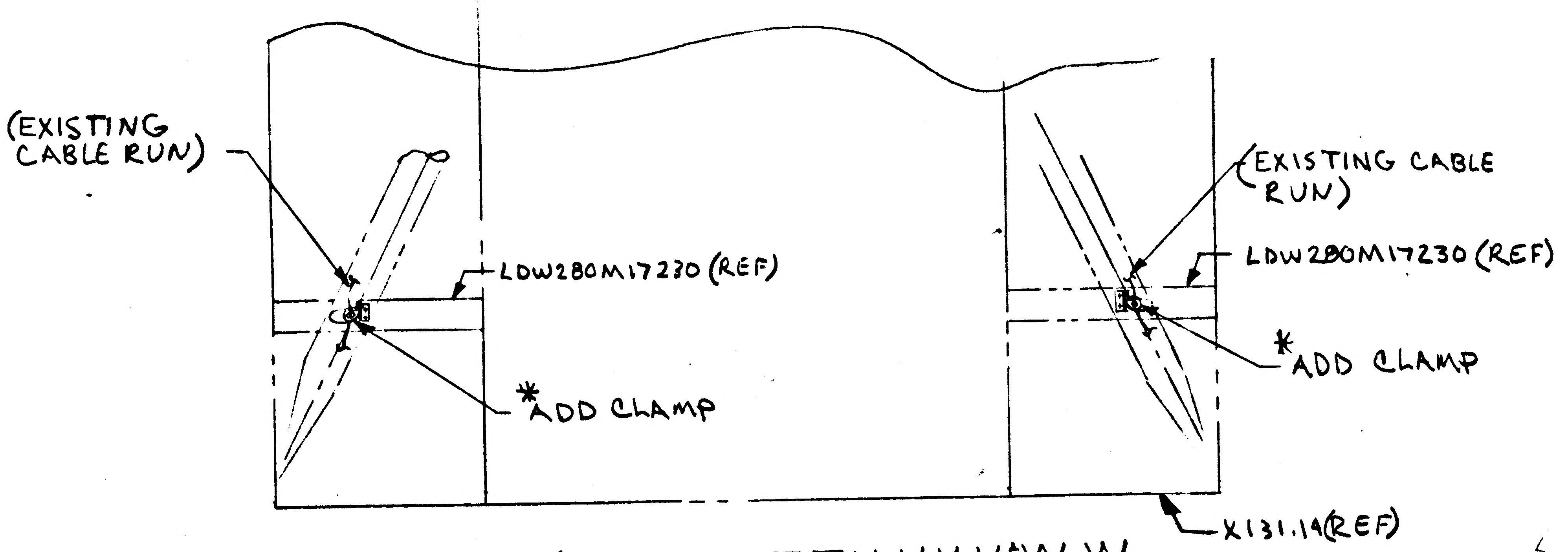

(EXISTING CABLE RUN)
LDW280M17230 (REF)
*ADD CLAMP
(EXISTING CABLE RUN)
LDW280M17230 (REF)
*ADD CLAMP
X131.14(REF)

ON-1 SH4 (TYP) SECT. T-T, U-U, V-V, & W-W

*GC500S CLAMPS TO BE INSTALLED PER LPC280-23

DETAIL SPEC REQ		CL II ENGRG CHG ✓	CL I ENGRG CHG	LCD 1078	5
REASON FOR EO: TO ADD ADDITIONAL CABLE SUPPORT			DESCRIPTION OF EO: NOTED		GAEC C EO RELEASE: K 6/6/7

MODEL	PROCURING ACTIVITY NO.	GAEC UNIT NO.	SUB CONTR UNIT NO.
LM		LM-2(32)	

DRAWING CHANGE REQD: REVISE DWG	RECORD EO	DISPOSITION OF PARTS: REWORK	SCRAP	APPROVED BY / DATE			SUPPORT	RELIAB. GROUP	GROUP LEADER	STRESS GROUP	LIAISON ENGRG	PROJ ENGRG	~~GOVT~~
✓		✓		JaP 5/26/67	1	VDI			JW 5/23/67	WH 5/26/67		Dam 5/27/67	JPJ 6/5/67

PRIORITY	DRAWING TITLE	DRAWING NO.	EO NO.
C	LINES INSTL - ELECTRONIC DESCENT STAGE	LDW280-52607	C1

ISSUED BY J FARRELL X1153 SECTION VDI/EQUIP LINES GROUP NO. 332 PL25

01

NAS 9-1100

ENG 32.2 REV 3-65

GRUMMAN AIRCRAFT ENGINEERING CORP.
CODE IDENT NO. 26512
ENGINEERING ORDER

DWG. NO. LDW280-52607
EO NO. C1
CONTROL INFO NO. LDW280A7789

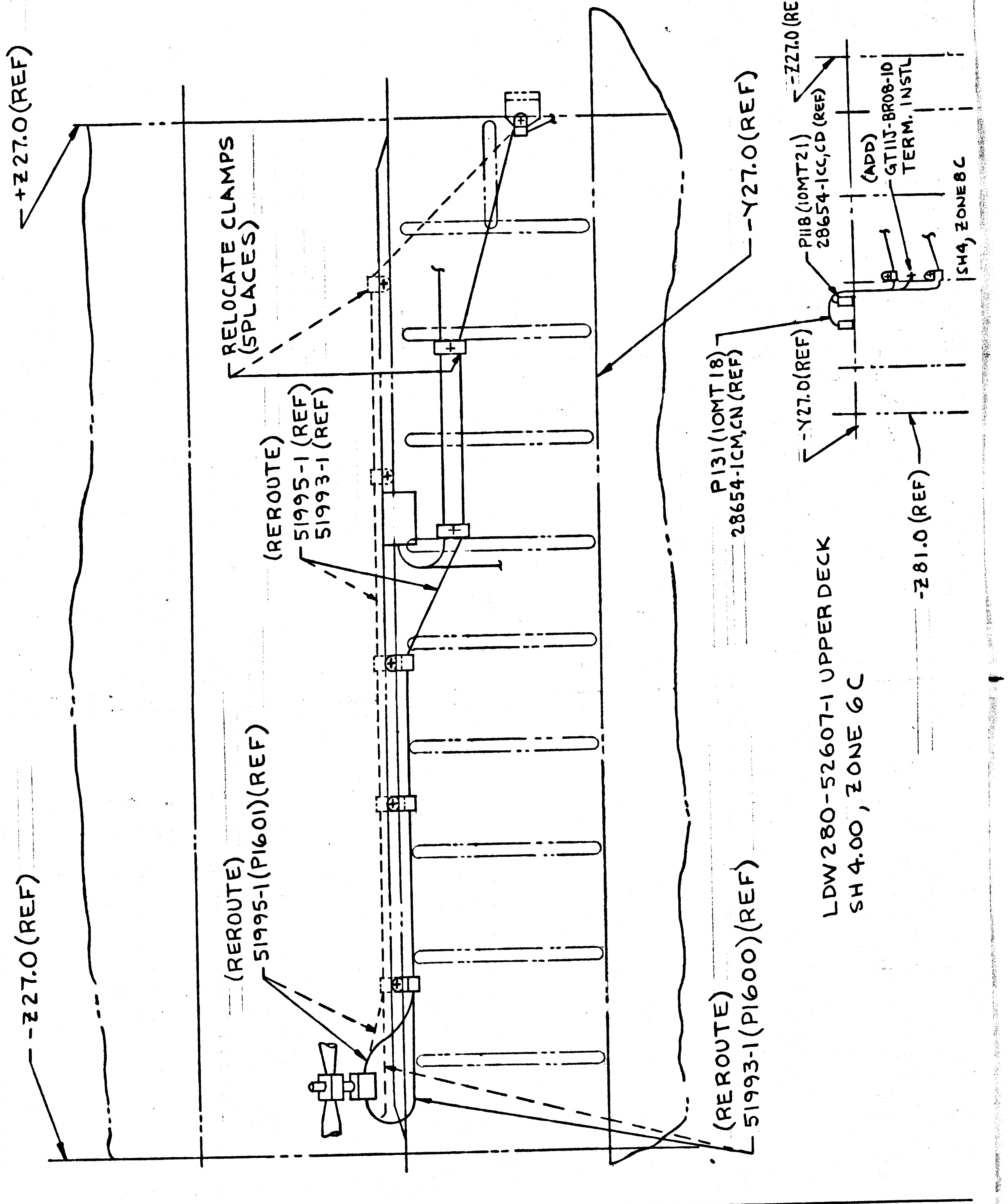
+Z27.0(REF)
RELOCATE CLAMPS (5PLACES)
(REROUTE)
51995-1 (REF)
51993-1 (REF)
(REROUTE)
51995-1(P1601)(REF)
-Z27.0(REF)
-Y27.0(REF)
P131(10MT18)
28654-1CM,CN (REF)
(REROUTE)
51993-1(P1600)(REF)
-Z27.0 (REF)
P118(10MT21)
28654-1CC,CD (REF)
(ADD)
GT11J-BR08-10
TERM. INSTL
SH4, ZONE 8C
-Y27.0(REF)
-Z81.0 (REF)
LDW280-52607-1 UPPER DECK
SH 4.00, ZONE 6C

DETAIL SPEC REQ	☐	CL II ENGRG CHG	☒	CL I ENGRG CHG	☐	LCD1244	5

REASON FOR EO: REROUTE WIRING TO PROVIDE CLEARANCE

DESCRIPTION OF EO: ON-1 REROUTED 51993-1(REF), 51995-1(REF) CABLES TO RELOCATED CLAMPS(5), ADDED GT11J-BR08-10 TERM. INSTL (1)

GAEC EO RELEASE: JL 7-3-67

MODEL	EFFECTIVITY: PROCURING ACTIVITY NO.	GAEC UNIT NO.	SUB CONTR UNIT NO.
LM		LM-2 (32)	

DRAWING CHANGE REQD: REVISE DWG ✓ RECORD EO
DISPOSITION OF PARTS: REWORK ✓ SCRAP

	VDI	SUPPORT	RELIAB. GROUP	GROUP LEADER	STRESS GROUP	LIAISON ENGRG	PROJ ENGRG	GOVT
APPROVED BY	Jap			JW	EP			
DATE	7/1/67			7/1/67	7/1		7/1/67	7-1-67

PRIORITY: C
DRAWING TITLE: LINES INSTL ELECTRONIC DESCENT STAGE
DRAWING NO.: LDW280-52607
EO NO.: C2

ISSUED BY R.EBERLE X1153 6-29-67 SECTION VDI (EQUIP LINES) GROUP NO. 332 PL 25

01
NAS 9-1100

ENG 32.2 REV 3-65

GRUMMAN AIRCRAFT ENGINEERING CORP.
CODE IDENT NO. 26512
ENGINEERING ORDER *

DWG. NO. LDW280-52607
EO NO. C2
CONTROL INFO NO. LDW280A7789

EO NUMBER UPPER RH
CORNER WAS C1

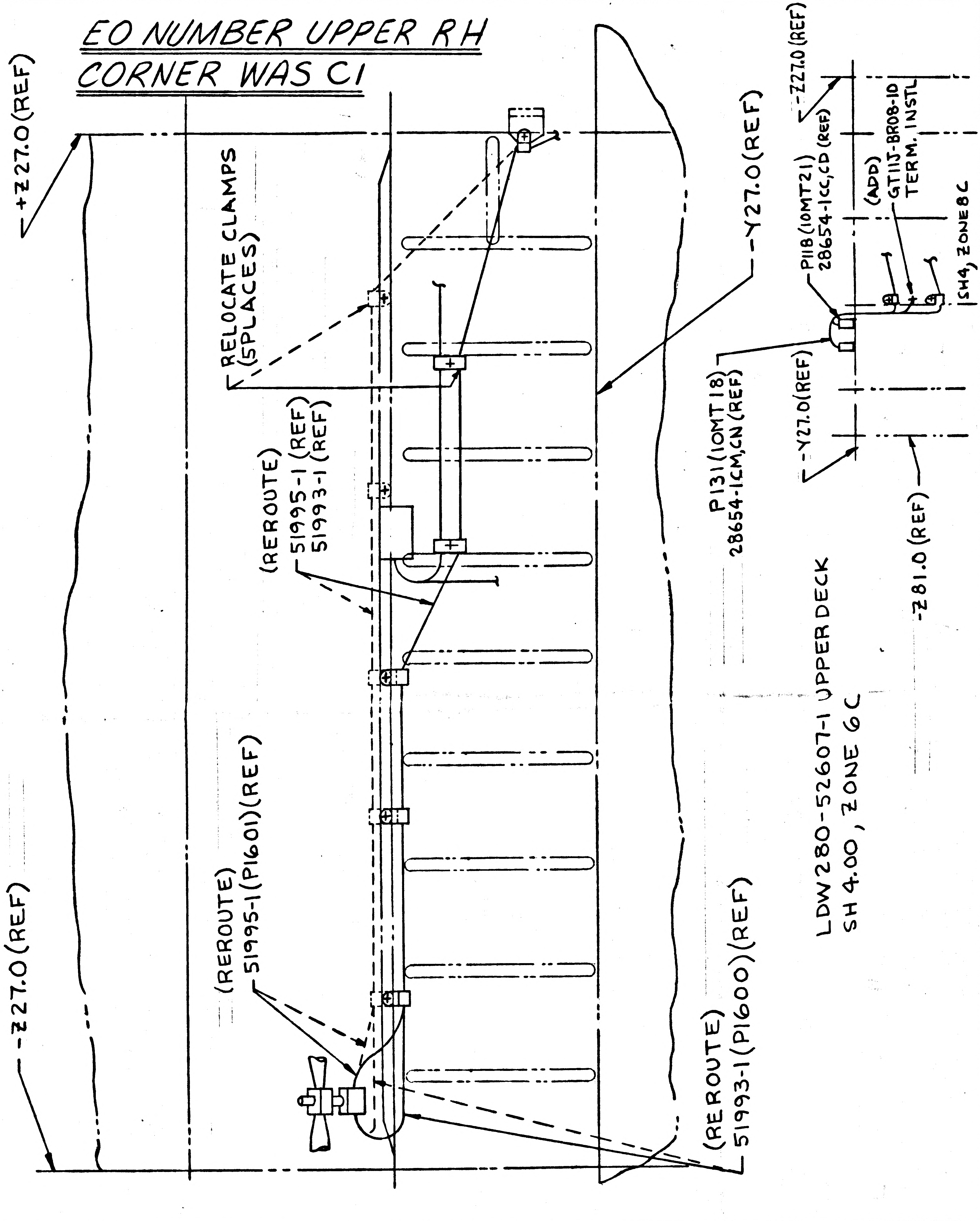
+Z27.0(REF)
RELOCATE CLAMPS
(5PLACES)
(REROUTE)
51995-1 (REF)
51993-1 (REF)
(REROUTE)
51995-1(P1601)(REF)
-Z27.0(REF)
Y27.0(REF)
P131(10MT18)
28654-1CM,CN(REF)
-Y27.0(REF)
P118(10MT21)
28654-1CC,CD (REF)
(ADD)
GT11J-BR08-10
TERM. INSTL
SH4, ZONE 8C
-Z27.0(REF)
-Z81.0(REF)
LDW280-52607-1 UPPER DECK
SH 4.00, ZONE 6C
(REROUTE)
51993-1(P1600)(REF)

DETAIL SPEC REQ	☐	CL II ENGRG CHG ☒	CL I ENGRG CHG ☐	LCD1244 5

REASON FOR EO: REROUTE WIRING TO PROVIDE CLEARANCE

DESCRIPTION OF EO: ON-1 REROUTED 51993-1(REF), 51995-1(REF) CABLES RELOCATED CLAMPS(5), ADDED GT11J-BR08-10 TERM. INSTL (1)

GAEC EO RELEASE: JL 7-3-67

MODEL	PROCURING ACTIVITY NO.	GAEC UNIT NO.	SUB CONTR UNIT NO.
LM		LM-2 (32)	

DRAWING CHANGE REQD: REVISE DWG	RECORD EO	DISPOSITION OF PARTS: REWORK	SCRAP
✓		✓	

	VDI	SUPPORT	RELIAB. GROUP	GROUP LEADER	STRESS GROUP	LIAISON ENGRG	PROJ ENGRG	GOVT
APPROVED BY	JaP			JW	EP			
DATE	7/1/67			7/1/67	7/1		7/1/67	7-1-67

PRIORITY: C

DRAWING TITLE: LINES INSTL ELECTRONIC DESCENT STAGE

DRAWING NO. LDW280-52607

EO NO. C2

ISSUED BY R.EBERLE X1153 6-29-67 SECTION VDI (EQUIP LINES) GROUP NO. 332 PL 25

01 NAS 9-1100

01

NAS 9-1100

ENG 32.2 REV 3-65

GRUMMAN AIRCRAFT ENGINEERING CORP.
CODE IDENT NO. 26512
ENGINEERING ORDER

DWG. NO. LDW280-52607 | EO NO. C3
CONTROL INFO NO. LDW280A-7861

ON-1 INSTL IN F/D PLAN VIEW TOP DECK SHEET 4 ZONE 4A TO CABLE CALLOUT TO ASCENT STAGE ADD REF CABLE ASSY 28654-1 DL.

ON-1 INSTL IN F/D VIEW D-D SHEET 6 ZONE 31 B

ADD REF CABLE ASSY 28654-1 DL AS SHOWN

ADD CLAMPS PER LPC 280-23

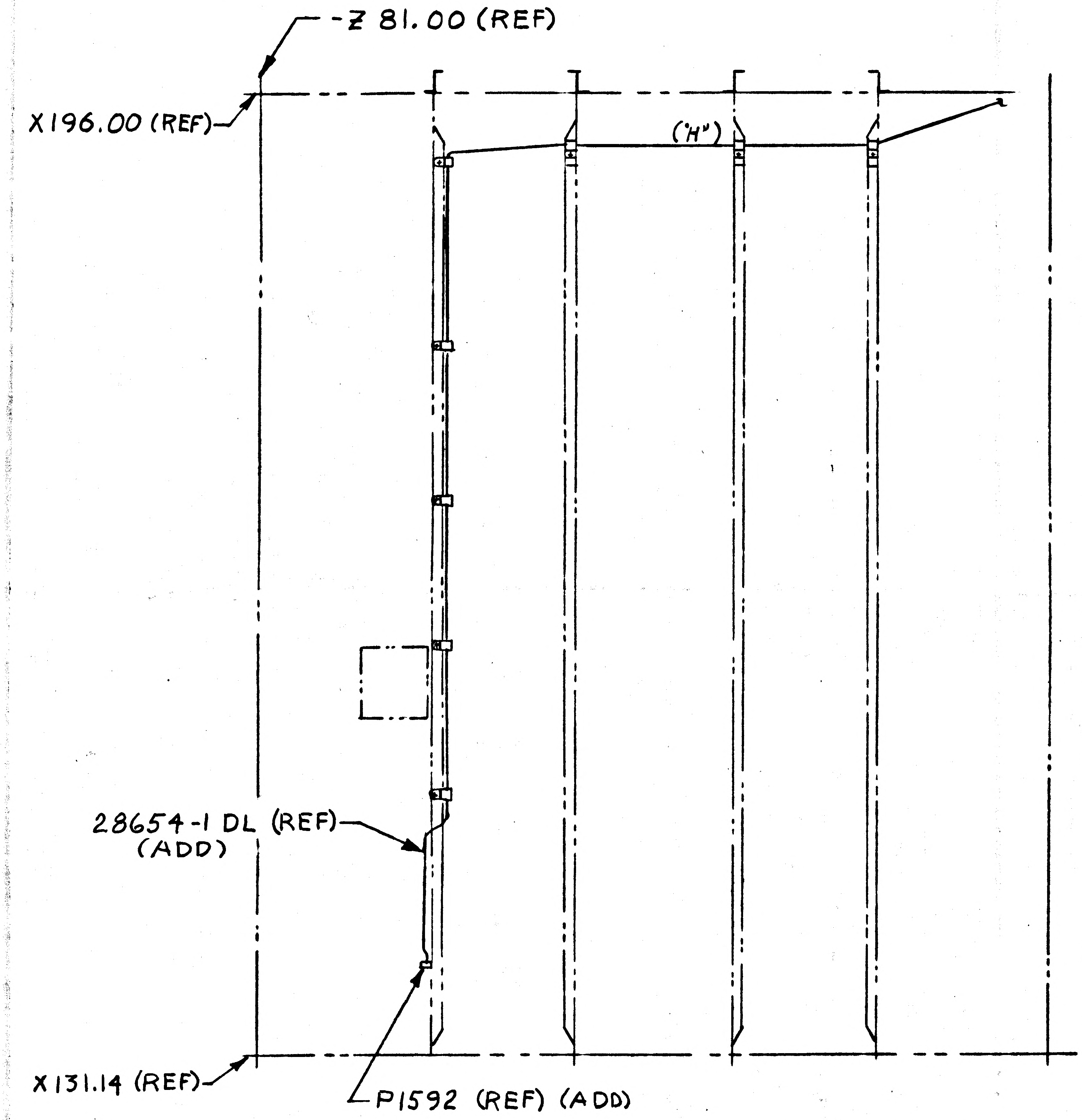

VIEW D-D (REF)
SH 6.00 ZONE 31 A

FOR EO REF ONLY: ALL C/A ARE PREFIXED BY LDW390 & ARE REF ONLY

DETAIL SPEC REQ ☐	CL II ENGRG CHG ☒	CL I ENGRG CHG ☐	LCD 1594		5

REASON FOR EO: TO PROVIDE LM-2 WITH CAPABILITY FOR UNMANNED (LM-1) MISSION

DESCRIPTION OF EO: ON-1 INSTL IN F/D PLAN VIEW TOP DECK TO CABLE CALLOUT TO A/S ADDED 28654-1 DL. IN VIEW D-D ADDED CABLE ASSY 28654-1 DL(REF) P1592(REF)

GAEC EO RELEASE: JK 7/25/7 C

MODEL	PROCURING ACTIVITY NO.	GAEC UNIT NO.	SUB CONTR UNIT NO.
LM		LM-2(32)	

DRAWING CHANGE REQD: REVISE DWG ✓ | RECORD EO
DISPOSITION OF PARTS: REWORK ✓ | SCRAP

	VDI	SUPPORT	RELIAB. GROUP	GROUP LEADER	STRESS GROUP	LIAISON ENGRG	PROJ ENGRG	~~COMM~~
APPROVED BY				JW				
DATE	7/20/67			7/20/67	7/2		7/2	7-25-67

PRIORITY: C
DRAWING TITLE: LINES INSTL ELECTRONIC DESCENT STAGE
DRAWING NO. LDW280-52607
EO NO. C3

7-27-67
ISSUED BY HUGH RYAN X 1392 7-20-67 SECTION VDI (EQUIP LINES) GROUP NO. 332 PL 25

01

NAS 9-1100

ENG 32.2 REV 3-65

GRUMMAN AIRCRAFT ENGINEERING CORP.
CODE IDENT NO. 26512
ENGINEERING ORDER

DWG. NO.	LDW280-52607	EO NO.	C4
CONTROL INFO NO.	LDW280A8286		

THIS E.O. REVISES E.O. C3.

ON-1 INSTL REROUTE 28654-1 DL(REF) & RELOCATE CLAMP

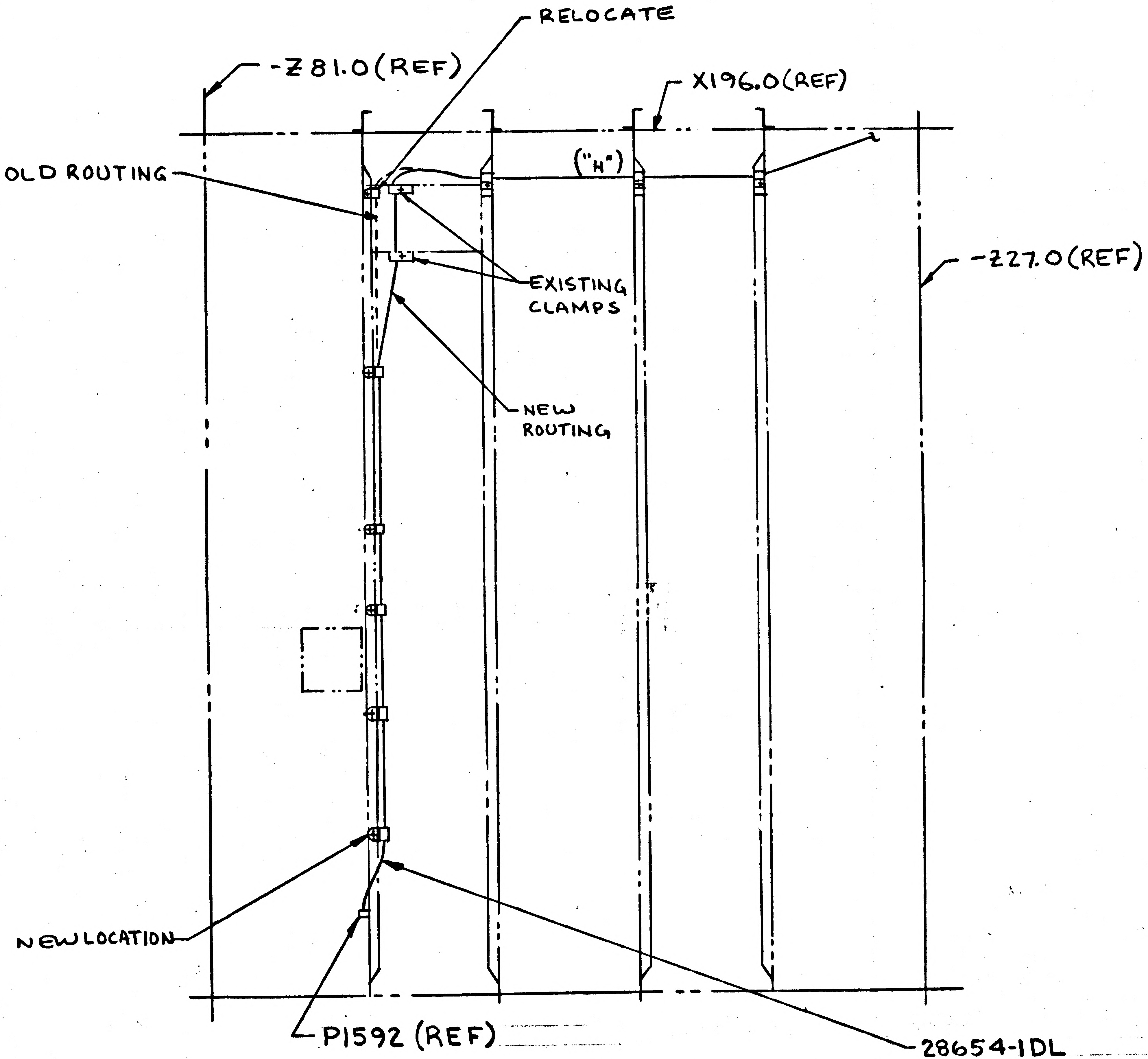
RELOCATE
-Z81.0(REF)
X196.0(REF)
("H")
OLD ROUTING
EXISTING CLAMPS
-Z27.0(REF)
NEW ROUTING
NEW LOCATION
P1592 (REF)
28654-1DL (REF)

VIEW D-D (REF)
(SH 6.00 ZONE 31A)

DETAIL SPEC REQ	☐	CL II ENGRG CHG	☒	CL I ENGRG CHG	☐	LCD 1594

REASON FOR EO: REVISE E.O. C3 AS ORIGINAL CLAMPING WAS INADEQUATE

DESCRIPTION OF EO: REF EO C3 ON-1 INSTL REROUTED 28654-1 DL & RELOCATED CLAMP

Ⓡ GAEC EO RELEASE: C JK 8/2/7

MODEL	EFFECTIVITY: PROCURING ACTIVITY NO.	GAEC UNIT NO.	SUB CONTR UNIT NO.
LM		LM-2(32)	

DRAWING CHANGE REQD: REVISE DWG	RECORD EO	DISPOSITION OF PARTS: REWORK	SCRAP
✓		✓	

	VDI	SUPPORT	RELIAB. GROUP	GROUP LEADER	STRESS GROUP	LIAISON ENGRG	PROJ ENGRG	~~CUST~~
APPROVED BY								
DATE	7/29/67			7/29/67	7/31/67		8/1/67	8-1-67

PRIORITY	DRAWING TITLE	DRAWING NO.	EO NO.
C	LINES INSTL ELECTRONIC DESCENT	LDW280-52607	C4

7/31 ISSUED BY R. EBERLE X1153 SECTION VDI(EQUIP LINES) GROUP NO. 332 PL 25

GRUMMAN AIRCRAFT ENGINEERING CORP.
CODE IDENT NO. 26512
ENGINEERING ORDER *

ENG 22.3 REV 3-65

B

DWG. NO.	LDW280-52607	EO NO.	C5
CONTROL INFO NO.	LDW280A 8305		

ON-1 INSTL

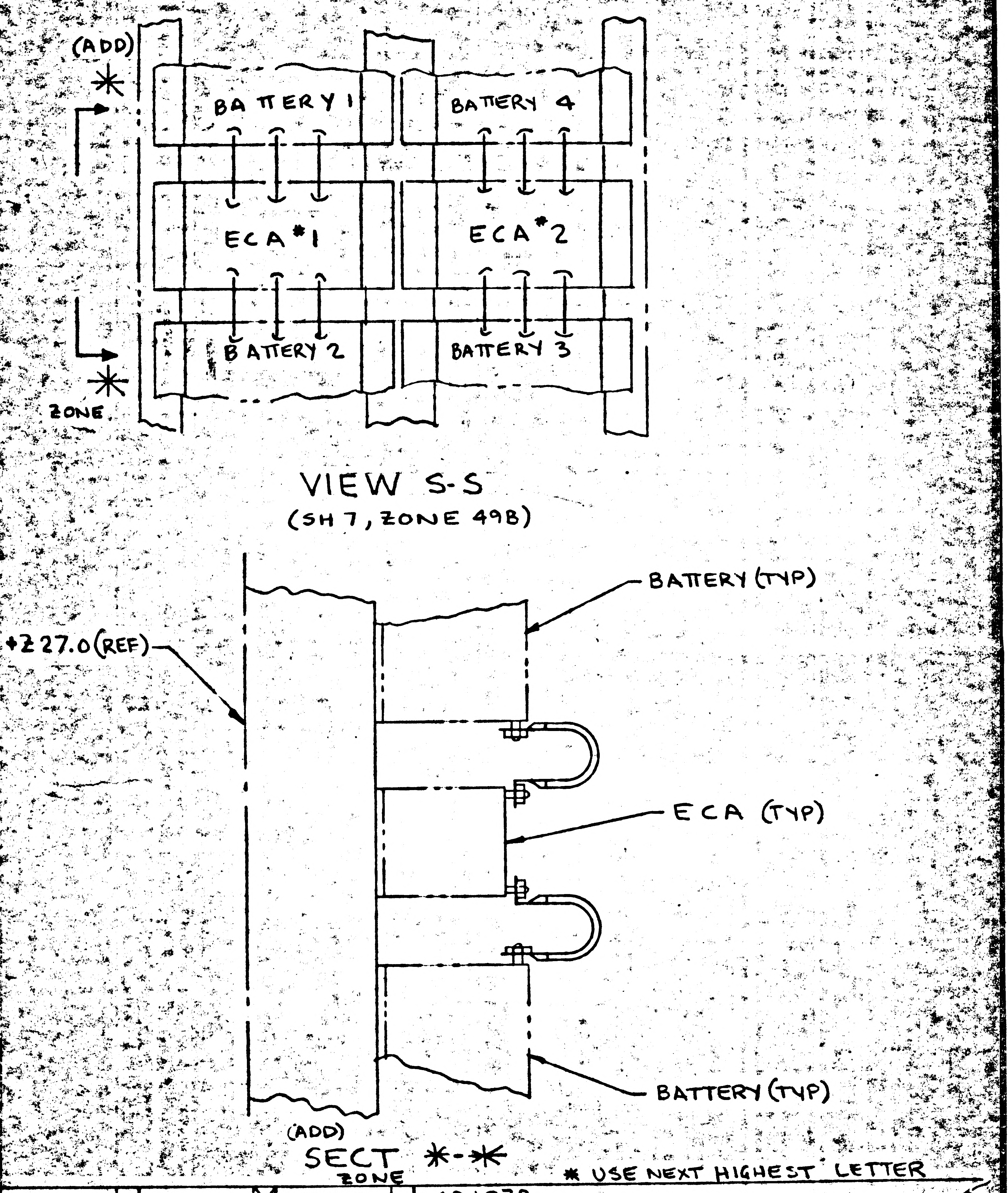
(ADD)
*
ZONE
*
BATTERY 1
BATTERY 4
ECA #1
ECA #2
BATTERY 2
BATTERY 3
+227.0 (REF)
BATTERY (TYP)
ECA (TYP)
BATTERY (TYP)

VIEW S-S
(SH 7, ZONE 49B)

(ADD)
SECT *-*
ZONE

* USE NEXT HIGHEST LETTER

DETAIL SPEC REQ	☐	CL II ENGRG CHG	☒	CL I ENGRG CHG	☐	LCD 1078

REASON FOR EO: SHOW EXACT INSTL OF JUMPER CABLES

DESCRIPTION OF EO: ON-1 INSTL ADDED SECTION * - *

GAEC EO RELEASE: ® JK 8/2/5

MODEL	PROCURING ACTIVITY NO.	GAEC UNIT NO.	SUB CONTR UNIT NO.
LM		LM-2(32)	

DRAWING CHANGE REQD		DISPOSITION OF PARTS	
REVISE DWG	RECORD EO	REWORK	SCRAP
✓		✓	

		SUPPORT	RELIAB. GROUP	GROUP LEADER	STRESS GROUP	LIAISON ENGRG	PROJ ENGRG	
APPROVED BY	VDI			CKG				
DATE	7/26/67			7/31/67	8/1/67		8/1/67	8-2-67

PRIORITY: C

DRAWING TITLE: LINES INSTALLATION ELECTRONIC DESCENT STAGE

DRAWING NO.: LDW280-52607

EO NO.: C5

8/3
ISSUED BY R.EBERLE X1153

SECTION VDI (EQUIP LINES) GROUP NO. 332 25

01

NAS 9-1100

ENG 32.2 REV 3-65

B

GRUMMAN AIRCRAFT ENGINEERING CORP.
CODE IDENT NO. 26512
ENGINEERING ORDER

DWG. NO. LDW280-52607		EO NO.	C6
CONTROL INFO NO. LDW280A 7236			

ON-1:

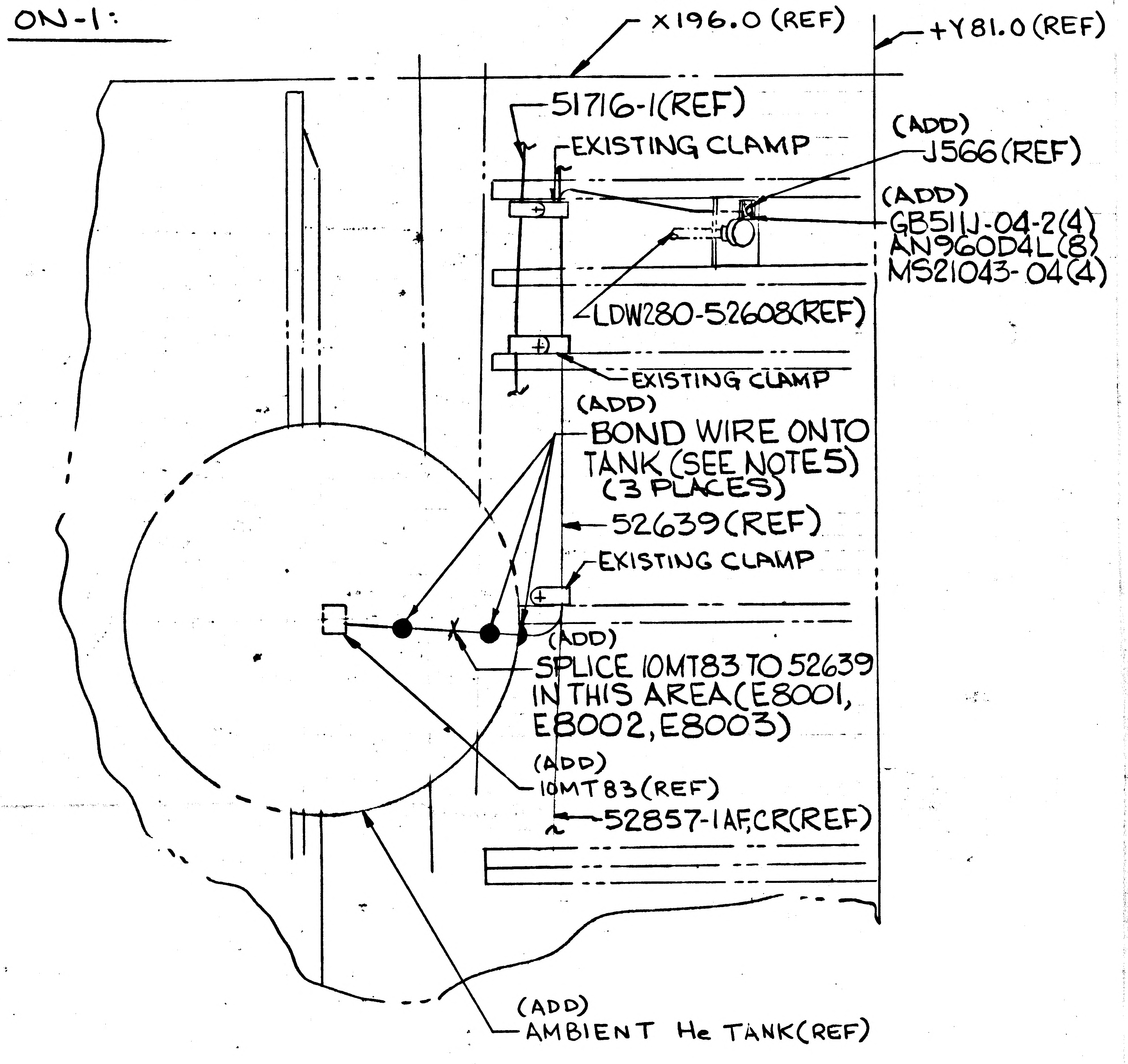

X196.0 (REF)
+Y81.0 (REF)
51716-1(REF)
EXISTING CLAMP
(ADD)
J566(REF)
(ADD)
GB511J-04-2(4)
AN960D4L(8)
MS21043-04(4)
LDW280-52608(REF)
EXISTING CLAMP
(ADD)
BOND WIRE ONTO TANK (SEE NOTE 5) (3 PLACES)
52639(REF)
EXISTING CLAMP
(ADD)
SPLICE 10MT83 TO 52639 IN THIS AREA (E8001, E8002, E8003)
(ADD)
10MT83(REF)
52857-1AF,CR(REF)
(ADD)
AMBIENT He TANK(REF)

VIEW C-C
(SH 6, ZONE 28B)

-1 INSTL

EO REF ONLY: ALL C/A ARE PREFIXED BY LDW390 & ARE REF ONLY

DETAIL SPEC REQ		CL II ENGRG CHG		CL I ENGRG CHG	✓	LCD1299 ok

REASON FOR EO	DESCRIPTION OF EO	® GAEC EO RELEASE
ADD CABLE ROUTING FOR NEW XDUCER	ON-1 INSTL ADDED: 10MT83(REF), AMBIENT He TANK(REF), STRUCTURAL BOND (SEE NOTE 5), 52639 (REF), SPLICE 10MT83 TO 52639 IN THIS AREA, J566(REF), GB511J-04-2(4), AN960D4L(8), MS21043-04(4)	JK 8/5/7

MODEL	PROCURING ACTIVITY NO.	GAEC UNIT NO.	SUB CONTR UNIT NO.	DRAWING CHANGE REQD: REVISE DWG	RECORD EO	DISPOSITION OF PARTS: REWORK	SCRAP
LM		LM-2(32)		✓		✓	

	VDI	SUPPORT	RELIAB. GROUP	GROUP LEADER	STRESS GROUP	LIAISON ENGRG	PROJ ENGRG	~~GOVT~~
APPROVED BY	JAP			JW			RB	
DATE	8/3/67			8/3/67	8/4/67		8/4/67	8-5-67

PRIORITY	DRAWING TITLE	DRAWING NO.	EO NO.
C	LINES INSTALLATION ELECTRONIC DESCENT STAGE	LDW280-52607	C6

7/24
ISSUED BY R.EBERLE X1153 7-21-67 SECTION VDI (EQUIP LINES) GROUP NO. 332 PL 25

01 NAS 9-1100

ENG 32.1 REV 3-65

GRUMMAN AIRCRAFT ENGINEERING CORP.
CODE IDENT NO. 26512
ENGINEERING ORDER

DWG. NO. LEO-280
EO NO. 676
CONTROL INFO NO. LDW280A-8054

ON SH3 OF THE FOLLOWING DWGS.

DWG No	EFF	CHG NO.
✓ LDW280-52359	LM-2(32)	E2
✓ LDW280-53359	LM-3(33)	D1
✓ LDW280-54359	LM-4(34) TO LM-15(45	A6

DWG No.	EFF	CHG No.
✓ LDW280-52607	LM-2(32)	C7
LDW280-53607	LM-3(33)	C4
LDW280-54607	LM-4(34) TO LM-15(45	B4

ADD THE FOLLOWING NOTE

* ALL SPLICES OR BUNDLE OF SPLICES IN ENGINE COMPARTMENT SHALL BE WRAPPED WITH A HELICAL WRAP OF ALUMINIUM TAPE USING GT835J-8 OR-4 (MYSTIC 7402). WRAP TO EXTEND 2" PAST LAST SPLICE ON EITHER SIDE. 25% MIN OVERLAP OF TAPE IS REQD.

*USE NEXT AVAILABLE NUMBER

DETAIL SPEC REQ ☐ CL II ENGRG CHG ✓ CL I ENGRG CHG ☐ LCD 1863 5 C

REASON FOR EO: TO PROTECT SPLICES IN ENGINE AREAS

DESCRIPTION OF EO: ON SH 3 ADDED NOTE

GAEC EO RELEASE: JK 8/10/7

MODEL	PROCURING ACTIVITY NO.	GAEC UNIT NO.	SUB CONTR UNIT NO.
LM		SEE ABOVE	

DRAWING CHANGE REQD: ✓ REVISE DWG ☐ RECORD EO
DISPOSITION OF PARTS: NOT REWORK REQ'D SCRAP

APPROVED BY		SUPPORT	RELIAB GROUP	GROUP LEADER	STRESS GROUP	LIAISON ENGRG	PROJ ENGRG	
DATE	7/17/67 VD1			7/17/67	7-19		7/10	8-9-67

PRIORITY: C
DRAWING TITLE: LINES INSTALLATIONS
DRAWING NO.: LEO-280
EO NO.: 676

ISSUED BY Tom BIANCHI (1392) SECTION EQUIP LINES (VDI) GROUP NO. 332 PL 25

01 NAS 9-1100

B

ENG 32.1 REV 3-65

GRUMMAN AIRCRAFT ENGINEERING CORP.
CODE IDENT NO. 26512
ENGINEERING ORDER

DWG NO. LDW280-52607		EO NO. C8
CONTROL INFO NO. LM-5- 16027		

ON -1 F/D

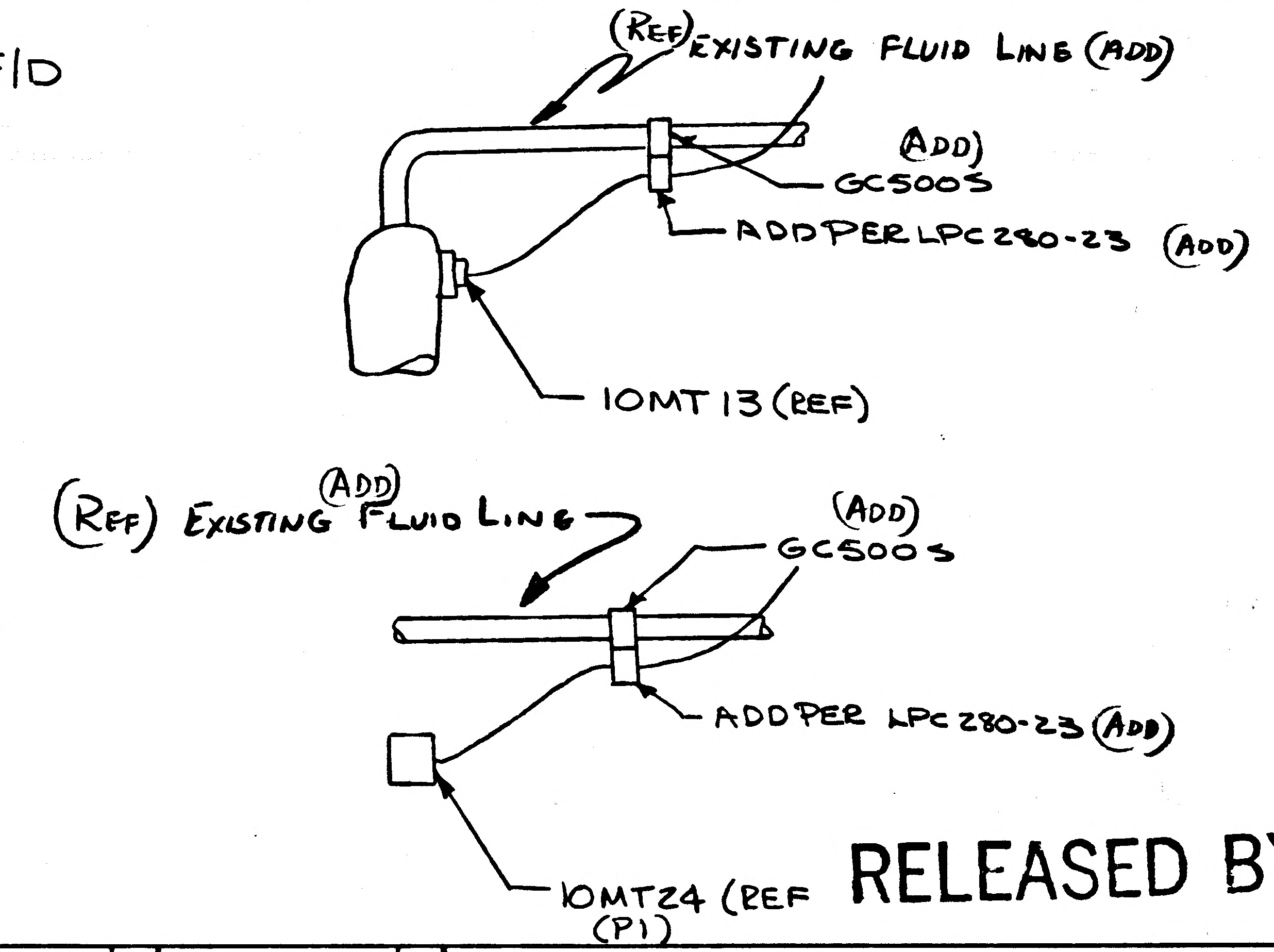

(REF) EXISTING FLUID LINE (ADD)
(ADD)
GC500S
ADD PER LPC 280-23 (ADD)
10MT13 (REF)
(REF) EXISTING (ADD) FLUID LINE
(ADD)
GC500S
ADD PER LPC 280-23 (ADD)
10MT24 (REF
(P1)

RELEASED BY LIAISON

DETAIL SPEC REQ	☐	CL II ENGRG CHG	✓	CL I ENGRG CHG	☐	5

REASON FOR EO

INSUFFICIENT CLAMPING
WIRE CHAFING

DESCRIPTION OF EO

ON -1
ADDED: REF EXISTING FLUID LINES (2PLS)
ADDED: CLAMPS GC500S (2PLS)
ADDED: ADD PER LPC 280-23 (2PLS)

GAEC EO RELEASE: JK

MODEL	EFFECTIVITY: PROCURING ACTIVITY NO.	GAEC UNIT NO.	SUB CONTR UNIT NO.
LM		LM-2(32)	

DRAWING CHANGE REQD: ✓ REVISE DWG ☐ RECORD EO

DISPOSITION OF PARTS: ✓ REWORK ☐ SCRAP

APPROVED BY	Jef			—	JJ	CR	WRB	
DATE	8/23/67			—	8-17-67	8/18/67	8/23/67	8/19/67
8/18/67	VDC	SUPPORT	RELIAB. GROUP	GROUP LEADER	STRESS GROUP	LIAISON ENGRG	PROJ ENGRG	~~GOVT~~

PRIORITY	DRAWING TITLE	DRAWING NO.	EO NO.
C5	LINES INSTALLATION ELECTRONIC DESCENT STAGE	LDW280-52607	C8

ISSUED BY LIAISON (H. BABCOCK) SECTION VD1 GROUP NO. 280 PL 5

01

NAS 9-1100

ENG 32.1 REV 3-65 B

GRUMMAN AIRCRAFT ENGINEERING CORP.
CODE IDENT NO. 26512
ENGINEERING ORDER

DWG. NO. LDW280-52607 | EO NO. C9
CONTROL INFO NO. LDW280A8408

ON-1 INSTL IN F/D SH 7.00 REMOVE CALLOUTS:

ZONE 49-C	AN4-5A(3)	ZONE 50-B	AN4-4A	AN4-5A
	AN960D416L(6)		AN960D416L(2)	AN960D416L(2)
	MS21042L4(3)		MS21042L4	MS21042L4

ZONE 47-A DETAIL M
ZONE 46-A DETAIL N
ZONE 46-A DETAIL P
ZONE 45-A DETAIL Q
GN511L-0420(3) (SEE NOTE 9)
MS21043-4(3) (SEE NOTE 8)

ON-1 INSTL IN B/M
SH 2.00 DELETE AN4-4A(1), AN4-5A(4), AN960D416L(10), MS21042L4(5), GN511L-0420(12), MS21043-4(12)
SH 3.00 DELETE NOTES 8, 9 & 14

DETAIL SPEC REQ	☐	CL II ENGRG CHG	☑	CL I ENGRG CHG	☐	LCD 1819

REASON FOR EO: TRANSFER OF INFO FROM EQUIP LINES DWG TO EPS DWGS

DESCRIPTION OF EO: ON-1 INSTL IN F/D REMOVED AN4-4A(1), AN4-5A(4), AN960D416L(10), MS21042L4(5), GN511L-0420(12) (SEE NOTE 9), MS21043-4(12) (SEE NOTE 8), IN B/M DELETED AN960D416L(10), MS21042L4(5), AN4-4A(1), AN4-5A(4), NOTES 8, 9 & 14

GAEC EO RELEASE: JK 9/5/67

MODEL	EFFECTIVITY		
	PROCURING ACTIVITY NO.	GAEC UNIT NO.	SUB CONTR UNIT NO.
LM		LM-2(32)	

DRAWING CHANGE REQD		DISPOSITION OF PARTS									
✓		✓		APPROVED BY							
				DATE	8/28/67			8/29/67	8/29/67		8/30/67	8-30-67
REVISE DWG	RECORD EO	REWORK	SCRAP		VDI	SUPPORT	RELIAB. GROUP	GROUP LEADER	STRESS GROUP	LIAISON ENGRG	PROJ ENGRG	

PRIORITY	DRAWING TITLE	DRAWING NO.	EO NO.
C	LINES ELECTRONIC INSTL DESCENT STAGE	LDW280-52607	C9

8-31-67
ISSUED BY J. DEVITA X 1153 (8/26/67) SECTION EQUIP LINES (VDI) GROUP NO. 332 PL 25

01

NAS 9-1100

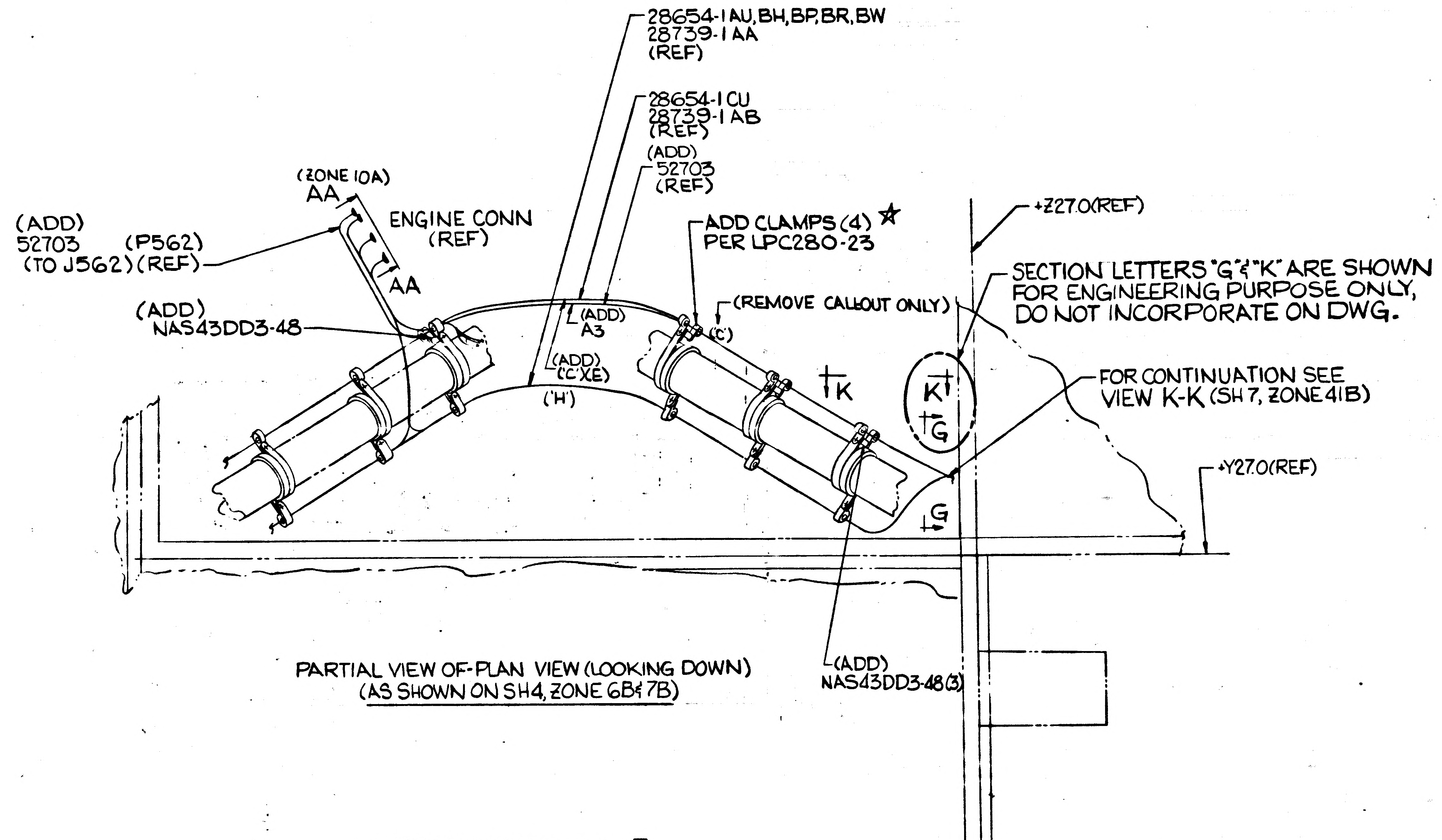
28654-1AU,BH,BP,BR,BW
28739-1AA
(REF)
28654-1CU
28739-1AB
(REF)
(ADD)
52703
(REF)
(ZONE 10A)
AA
ENGINE CONN
(REF)
(ADD)
52703
(TO J562)
(P562)
(REF)
AA
(ADD)
NAS43DD3-48
(ADD)
A3
(ADD)
(C'XE)
(H)
ADD CLAMPS (4) ☆
PER LPC280-23
(REMOVE CALLOUT ONLY)
(C)
+Z27.0(REF)
SECTION LETTERS "G" & "K" ARE SHOWN FOR ENGINEERING PURPOSE ONLY, DO NOT INCORPORATE ON DWG.
K
K
G
G
FOR CONTINUATION SEE VIEW K-K (SH 7, ZONE 41B)
+Y27.0(REF)
(ADD)
NAS43DD3-48(3)

PARTIAL VIEW OF-PLAN VIEW (LOOKING DOWN)
(AS SHOWN ON SH4, ZONE 6B & 7B)

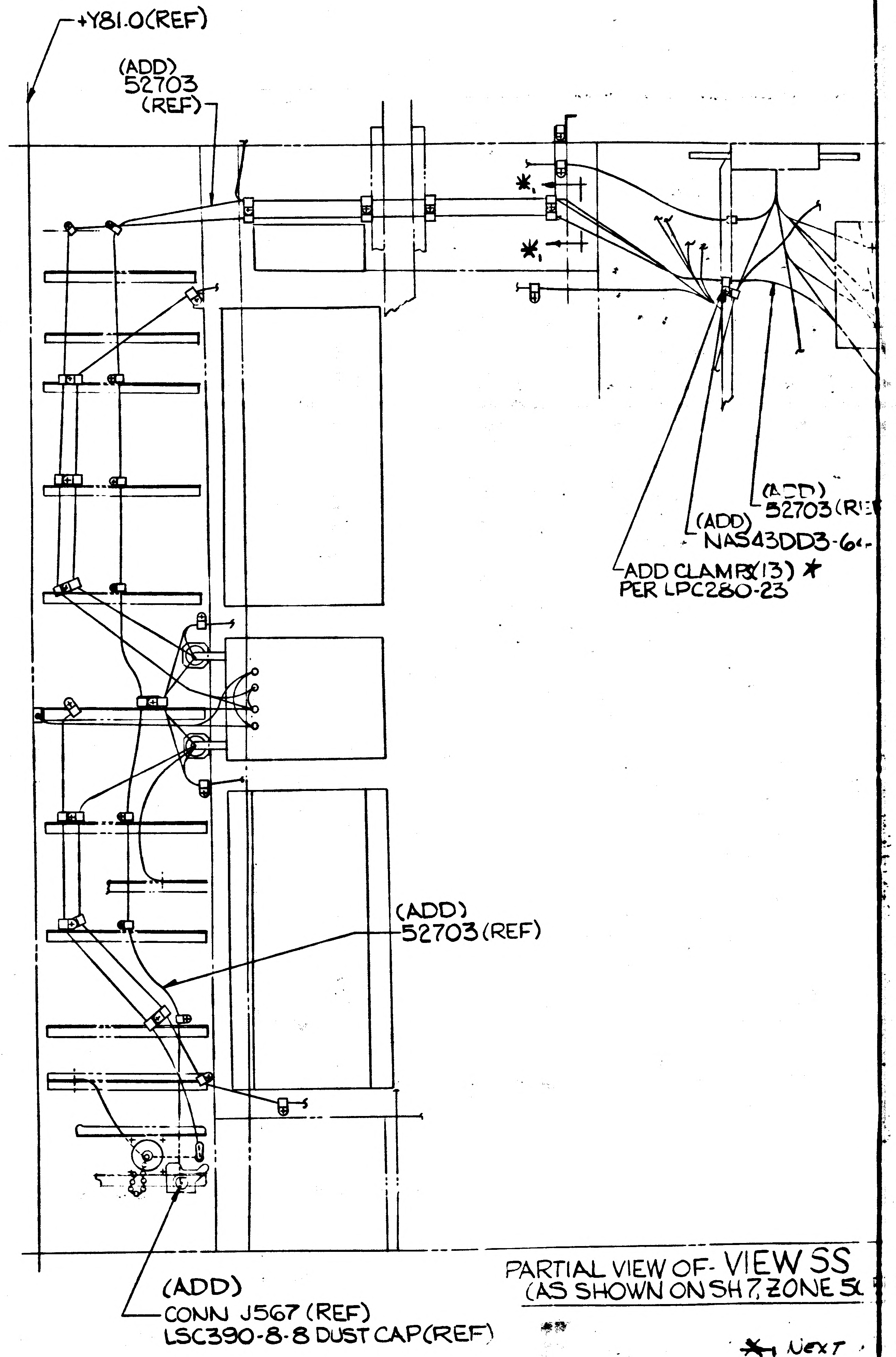
+Y81.0(REF)
(ADD)
52703
(REF)
*
*
(ADD)
52703(R
(ADD)
NAS43DD3-6
ADD CLAMPS(13) *
PER LPC280-23
(ADD)
52703(REF)
(ADD)
CONN J567 (REF)
LSC390-8-8 DUST CAP(REF)

PARTIAL VIEW OF- VIEW SS
(AS SHOWN ON SH 7, ZONE 5

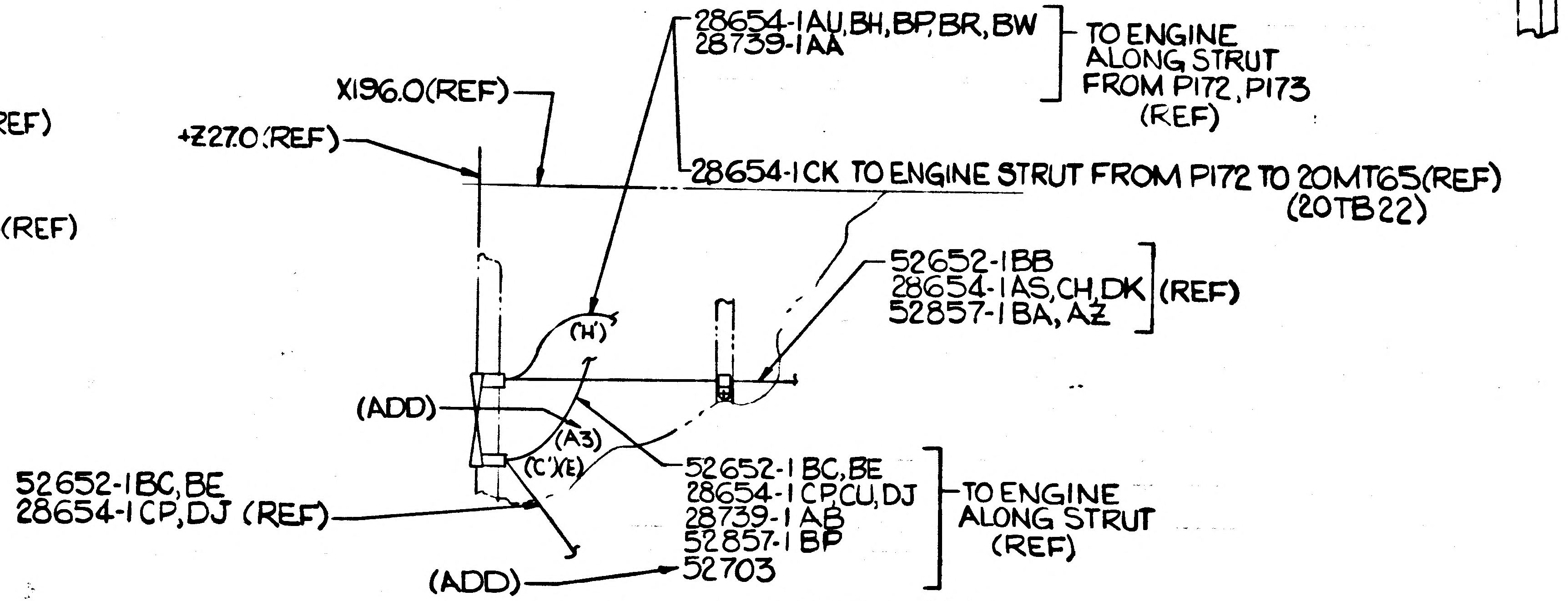
28654-1AU,BH,BP,BR,BW
28739-1AA
TO ENGINE ALONG STRUT FROM P172, P173 (REF)
X196.0(REF)
+Z27.0(REF)
28654-1CK TO ENGINE STRUT FROM P172 TO 20MT65(REF) (20TB22)
52652-1BB
28654-1AS,CH,DK
52857-1BA, AZ
(REF)
(H)
(ADD)
(A3)
(C'XE)
52652-1BC,BE
28654-1CP,DJ (REF)
52652-1BC,BE
28654-1CP,CU,DJ
28739-1AB
52857-1BP
52703
TO ENGINE ALONG STRUT (REF)
(ADD)

PARTIAL VIEW OF- VIEW K-K
(AS SHOWN ON SH 7, ZONE 41B)

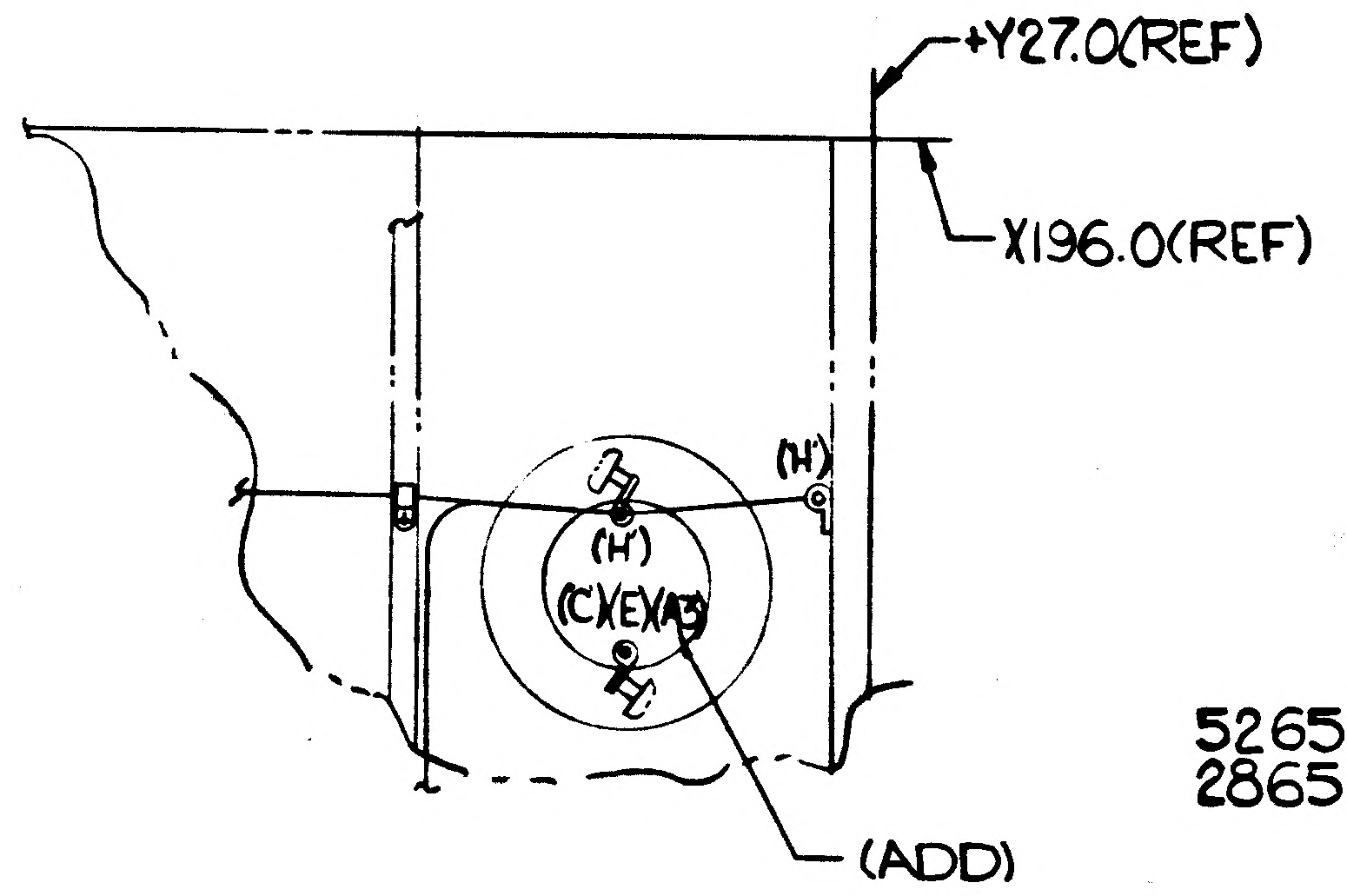
+Y27.0(REF)
X196.0(REF)
(H)
(H)
(C'XE)(A3)
(ADD)

PARTIAL VIEW OF- VIEW G-G
(AS SHOWN ON SH 7, ZONE 43B)

★ NEXT

★ GC500

DETAIL SPEC REQD		CLASS II ENGRG CHG	

REASON FOR EO

TO TEST REDUNDANCY OF
DESCENT STAGE ENGINE
ACTUATOR & PREVALVES.

MODEL	EFFECTIVITY PROCURING ACT. NO.	EFFECTIVITY GAEC UNIT NO.
LM		LM-2 (5-1)

9/23 53
ISSUED BY P.J. MARTELLO SECTION EQUIP

ENG 32.3 REV 3-66

01/02 NAS 9-1100

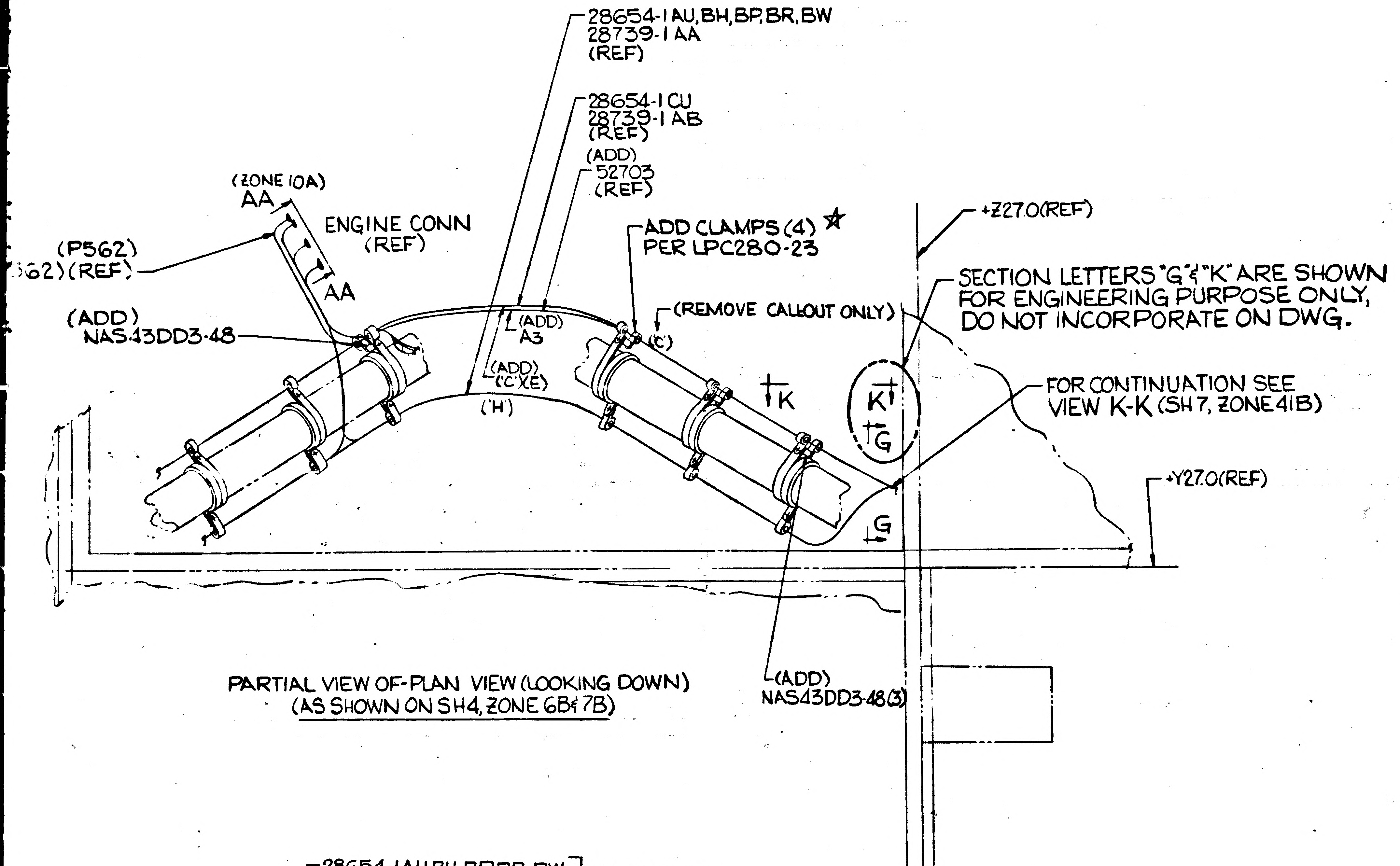
28654-1AU, BH, BP, BR, BW
28739-1AA
(REF)
28654-1CU
28739-1AB
(REF)
(ADD)
52703
(REF)
(ZONE 10A)
AA
ENGINE CONN
(REF)
(P562)
562)(REF)
AA
(ADD)
NAS43DD3-48
(ADD)
A3
(ADD)
('C')(E)
('H')
ADD CLAMPS (4) ☆
PER LPC280-23
(REMOVE CALLOUT ONLY)
('C')
+Z27.0(REF)
SECTION LETTERS "G" & "K" ARE SHOWN FOR ENGINEERING PURPOSE ONLY, DO NOT INCORPORATE ON DWG.
K
K
G
G
FOR CONTINUATION SEE VIEW K-K (SH 7, ZONE 41B)
+Y27.0(REF)
(ADD)
NAS43DD3-48(8)

PARTIAL VIEW OF- PLAN VIEW (LOOKING DOWN)
(AS SHOWN ON SH 4, ZONE 6B & 7B)

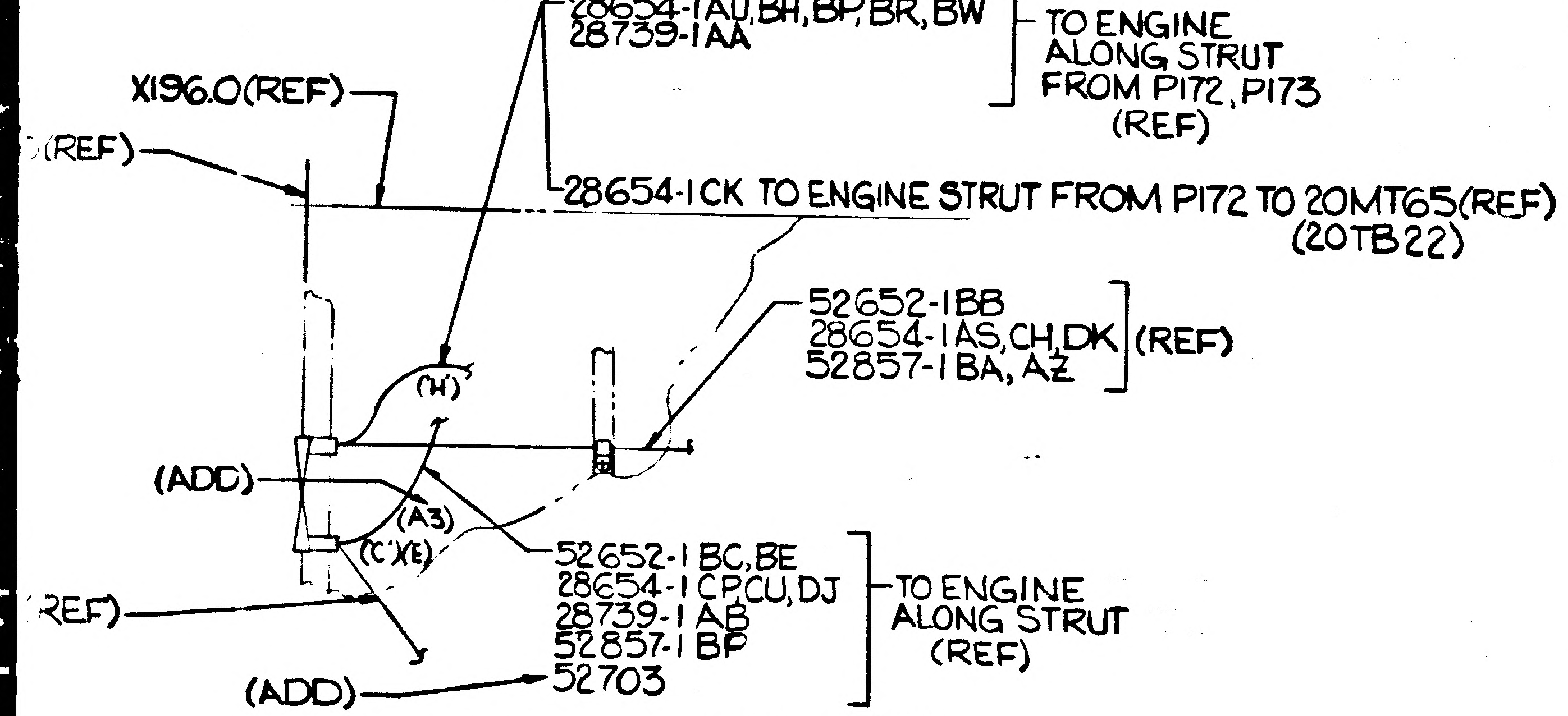
28654-1AU, BH, BP, BR, BW
28739-1AA
TO ENGINE ALONG STRUT FROM P172, P173 (REF)
X196.0(REF)
(REF)
28654-1CK TO ENGINE STRUT FROM P172 TO 20MT65(REF) (20TB22)
52652-1BB
28654-1AS, CH, DK
52857-1BA, AZ
(REF)
('H')
(ADD)
(A3)
('C')(E)
(REF)
(ADD)
52652-1BC, BE
28654-1CP, CU, DJ
28739-1AB
52857-1BP
52703
TO ENGINE ALONG STRUT (REF)

PARTIAL VIEW OF - VIEW K-K
(AS SHOWN ON SH 7, ZONE 41B)

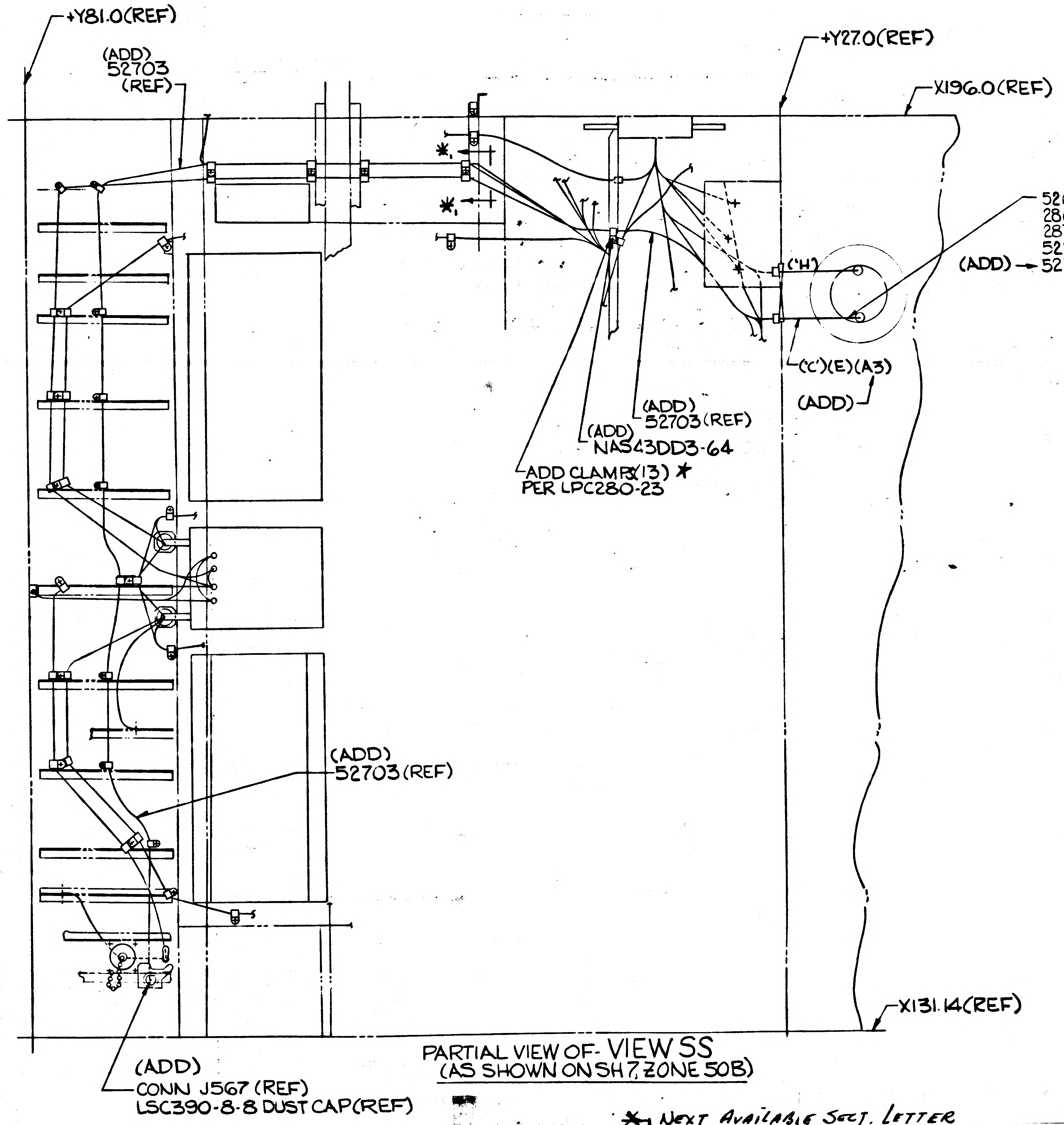
+Y81.0(REF)
(ADD)
52703
(REF)
*1
*1
+Y27.0(REF)
X196.0(REF)
52652-1BC, BE
28654-1CP, CU, DJ
28739-1AB
52857-1BP
(REF)
(ADD) 52703
('H')
('C')(E)(A3)
(ADD)
(ADD)
52703(REF)
(ADD)
NAS43DD3-64
ADD CLAMPS (13) ★
PER LPC280-23
(ADD)
52703(REF)
X131.14(REF)
(ADD)
CONN J567 (REF)
LSC390-8-8 DUST CAP(REF)

PARTIAL VIEW OF- VIEW SS
(AS SHOWN ON SH 7, ZONE 50B)

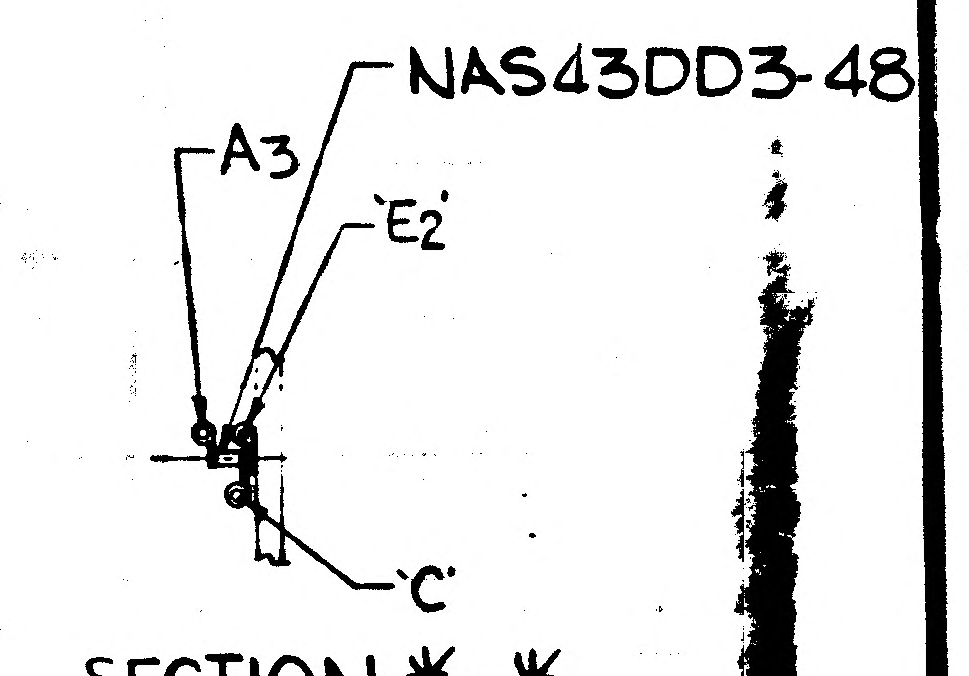
NAS43DD3-48
A3
'E2'
'C'

SECTION *1-*1
(TYP 4 PLACES)

FULL SIZE AREA (30X60) • 12.5 SQ FT
1/2 SIZE SHEET AREA (1/4 OF F''') 3.1 SQ FT

*1 NEXT AVAILABLE SECT. LETTER
★ GC500AA CLAMPS INSTALLED / LPC 280-23

DETAIL SPEC REQD		CLASS II ENGRG CHG		CLASS I ENGRG CHG	✓ LCD 1767
CONTROL INFO NO. LDW280A-7926					

REASON FOR EO: TO TEST REDUNDANCY OF THE DESCENT STAGE ENGINE THROTTLE ACTUATOR & PREVALVES.

DESCRIPTION OF EO: (ON-1 INSTL) ADDED: 52703 (REF), NAS43DD3-48(8), J567(REF), LSC390-8-8(REF), SECT-*1-*1, NAS43DD3-64

GRUMMAN EO RELEASE: JK 9/25/67

MODEL	PROCURING ACT. NO.	GAEC UNIT NO.	SUB CONTR UNIT NO.
LM		LM-2 (32)	

DRAWING REVISION REQD: REVISE DWG ✓ | RECORD EO
DISPOSITION OF PARTS: REWORK ✓ | SCRAP

		SUPPORT	RELIAB GROUP	GROUP LEADER	STRESS GROUP	LIAISON ENGRG	PROJ ENGR	
BY	JAS			JW				
DATE	9/23/67			9/16/67	9/25/67		9/23/67	9-25-67
EXT	VDI							

PRIORITY: C
DRAWING TITLE: LINES INSTL ELECTRONIC DESCENT STAGE
ENGINEERING ORDER
DRAWING NO. LDW280-52607
EO NO. C10

9/23 X1153
ISSUED BY P.J. MARTELLO SECTION EQUIP. LINES (VDI) GROUP NO. 332 PL 25
CODE IDENT NO. 26512
GRUMMAN AIRCRAFT ENGINEERING CORP
BETHPAGE, L. I., N. Y.

ENG 38.3 REV 3-65

02/02 NAS 9-1100

ENG 32.2 REV 3-65

GRUMMAN AIRCRAFT ENGINEERING CORP.
CODE IDENT NO. 26512
ENGINEERING ORDER *

DWG. NO. LDW 280-52607		EO NO. D1	
CONTROL INFO NO. LM5-13634			

RELEASED BY LIAISON

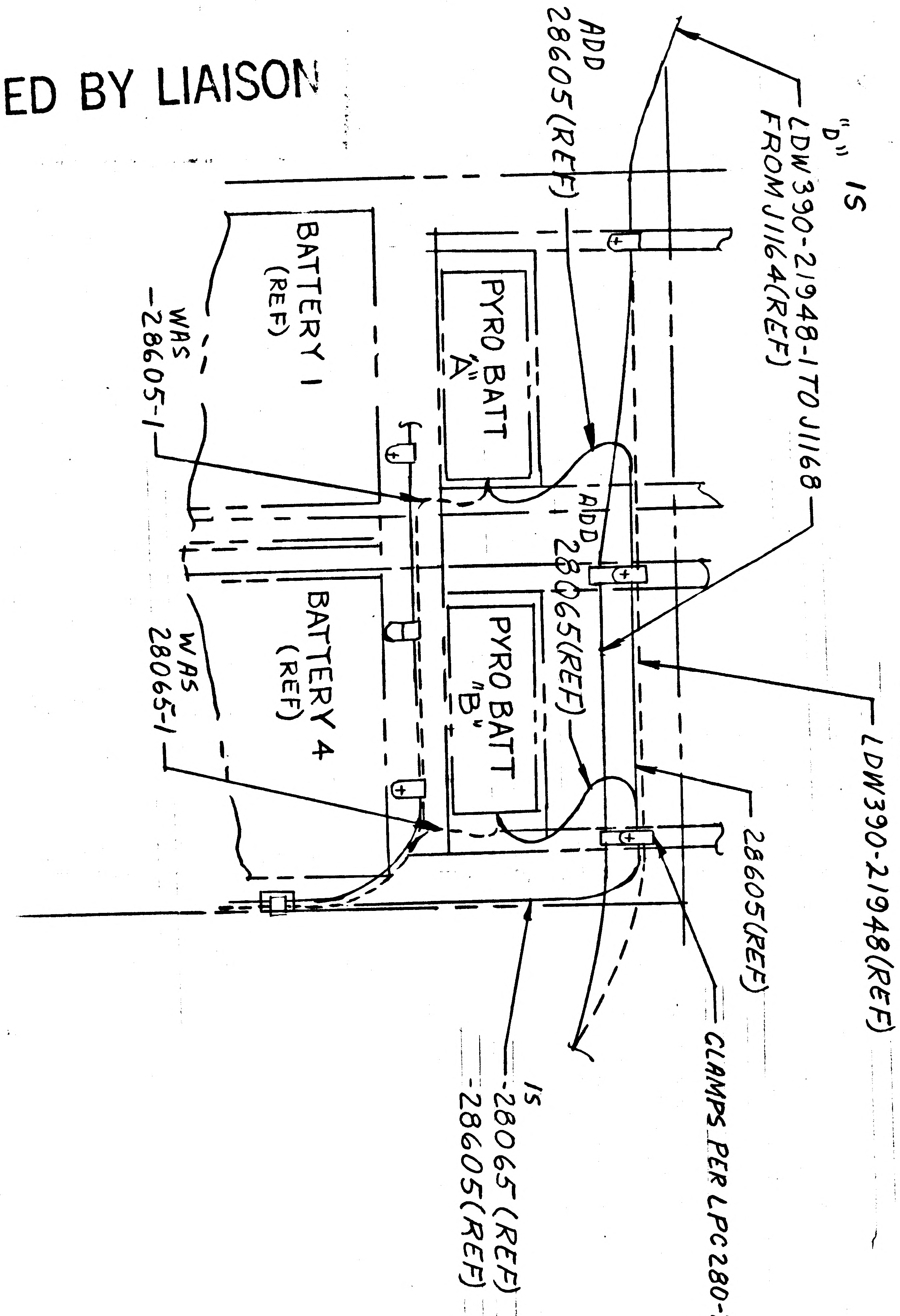

"D" IS
LDW390-21948-1 TO J1168
FROM J1164 (REF)
WAS
LDW390-21948 (REF)
28605 (REF)
CLAMPS PER LPC 280-23 (2)
ADD
28605 (REF)
ADD
28065 (REF)
IS
-28065 (REF)
-28605 (REF)
PYRO BATT "A"
PYRO BATT "B"
BATTERY 1 (REF)
BATTERY 4 (REF)
WAS
-28605-1
WAS
28065-1

VIEW S-S
ROTATED 90° CW
SH 7 ZONE 49 (REF)

DASH NUMBERS ARE PREFIXED BY
LDW390 AND ARE (REF) ONLY

DETAIL SPEC REQ		CL II ENGRG CHG	✓	CL I ENGRG CHG		5

REASON FOR EO	DESCRIPTION OF EO	GAEC EO RELEASE
TO CLEAR NEW STRUCT	ON-1 REROUTED LDW390-28065 & -28605 & ADDED CLAMPS PER LPC 280-23 (2)	JK

MODEL	EFFECTIVITY		
	PROCURING ACTIVITY NO.	GAEC UNIT NO.	SUB CONTR UNIT NO.
LM		LM 2 (32)	

DRAWING CHANGE REQD		DISPOSITION OF PARTS		APPROVED BY								
✓		✓		DATE	10/28/67			10 28	9-30-67	9-29-67	10/28/67	9-30-67
REVISE DWG	RECORD EO	REWORK	SCRAP	VD1	VD1	SUPPORT	RELIAB. GROUP	GROUP LEADER	STRESS GROUP	LIAISON ENGRG	PROJ ENGRG	

PRIORITY	DRAWING TITLE	DRAWING NO.	EO NO.
C	LINES INSTALLATION ELECTRONIC-DESCENT STAGE	LDW280-52607	D1

ISSUED BY ROSADO x86454 SECTION EQUIP LINES GROUP NO. 332 PL 5

01

NAS 9-1100

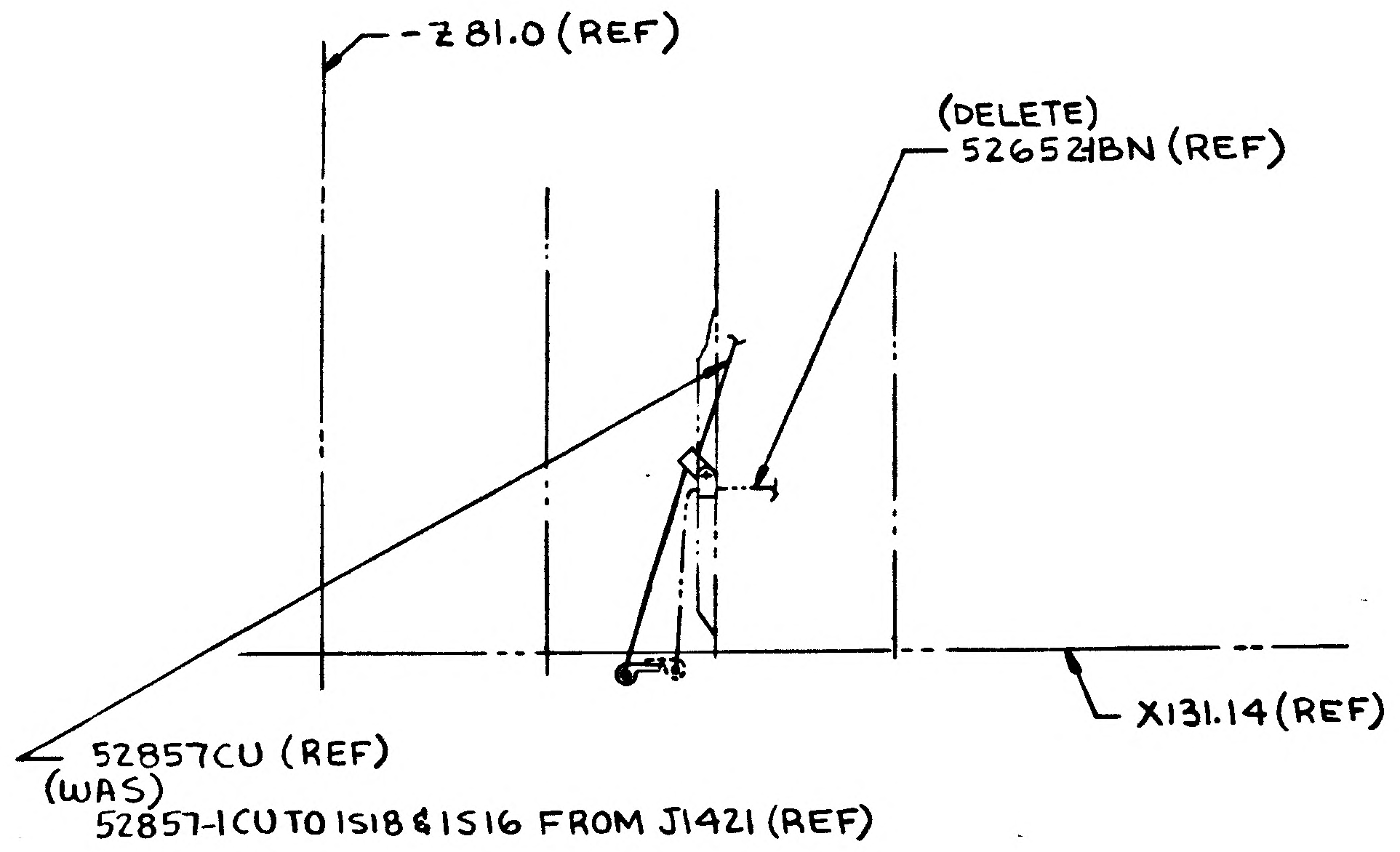
-Z81.0 (REF)
(DELETE)
52652-1BN (REF)
X131.14 (REF)
52857CU (REF)
(WAS)
52857-1CU TO 1S18 & 1S16 FROM J1421 (REF)

VIEW D-D
(SH 6, ZONE 31A)

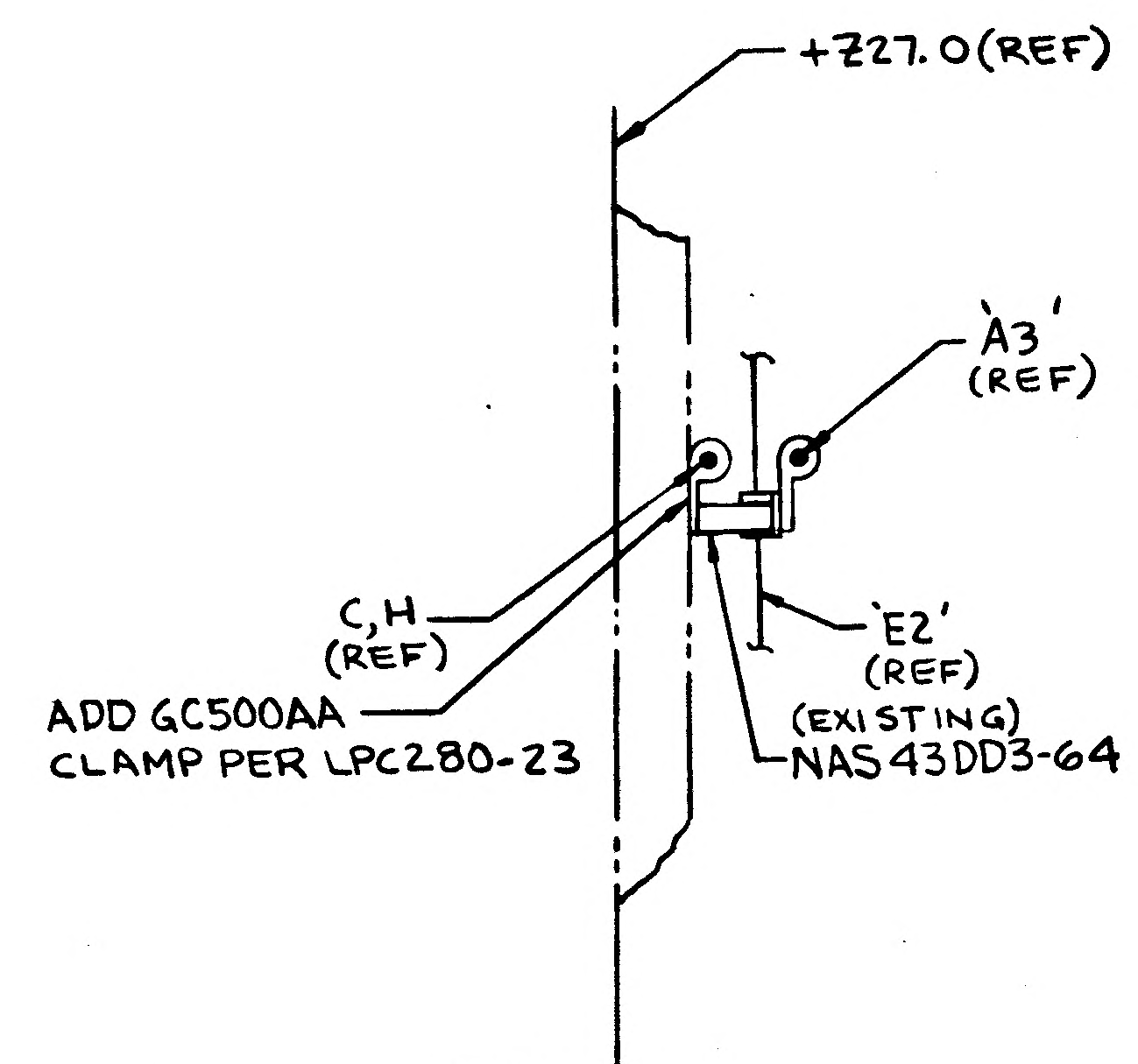
+Z27.0 (REF)
'A3'
(REF)
C,H
(REF)
ADD GC500AA
CLAMP PER LPC280-23
'E2'
(REF)
(EXISTING)
NAS43DD3-64

(ADD)
SECT. *-*

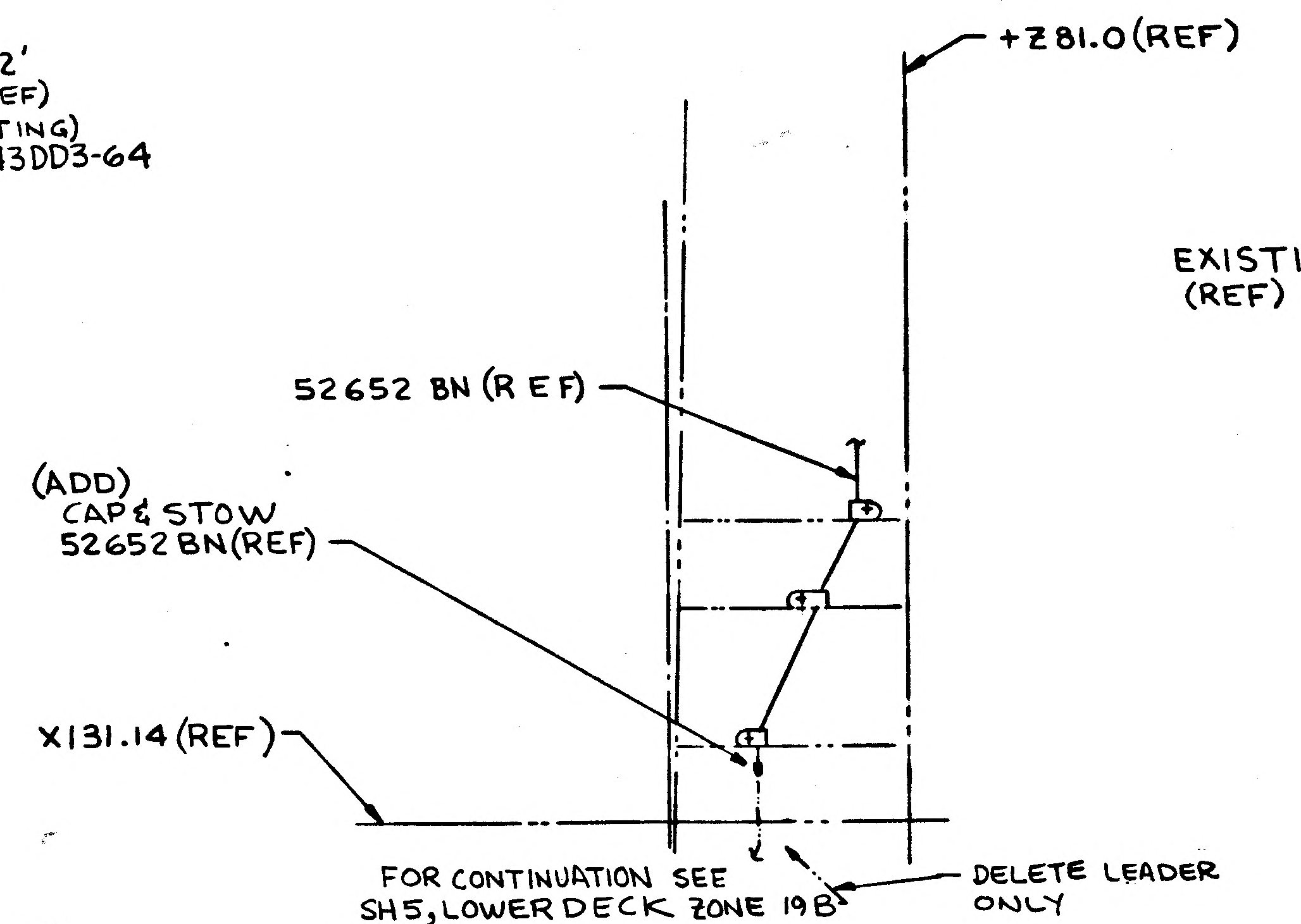
+Z81.0 (REF)
52652 BN (REF)
(ADD)
CAP & STOW
52652 BN (REF)
X131.14 (REF)
FOR CONTINUATION SEE
SH5, LOWER DECK ZONE 19B
DELETE LEADER
ONLY

VIEW R-R
(SH7, ZONE 47B)

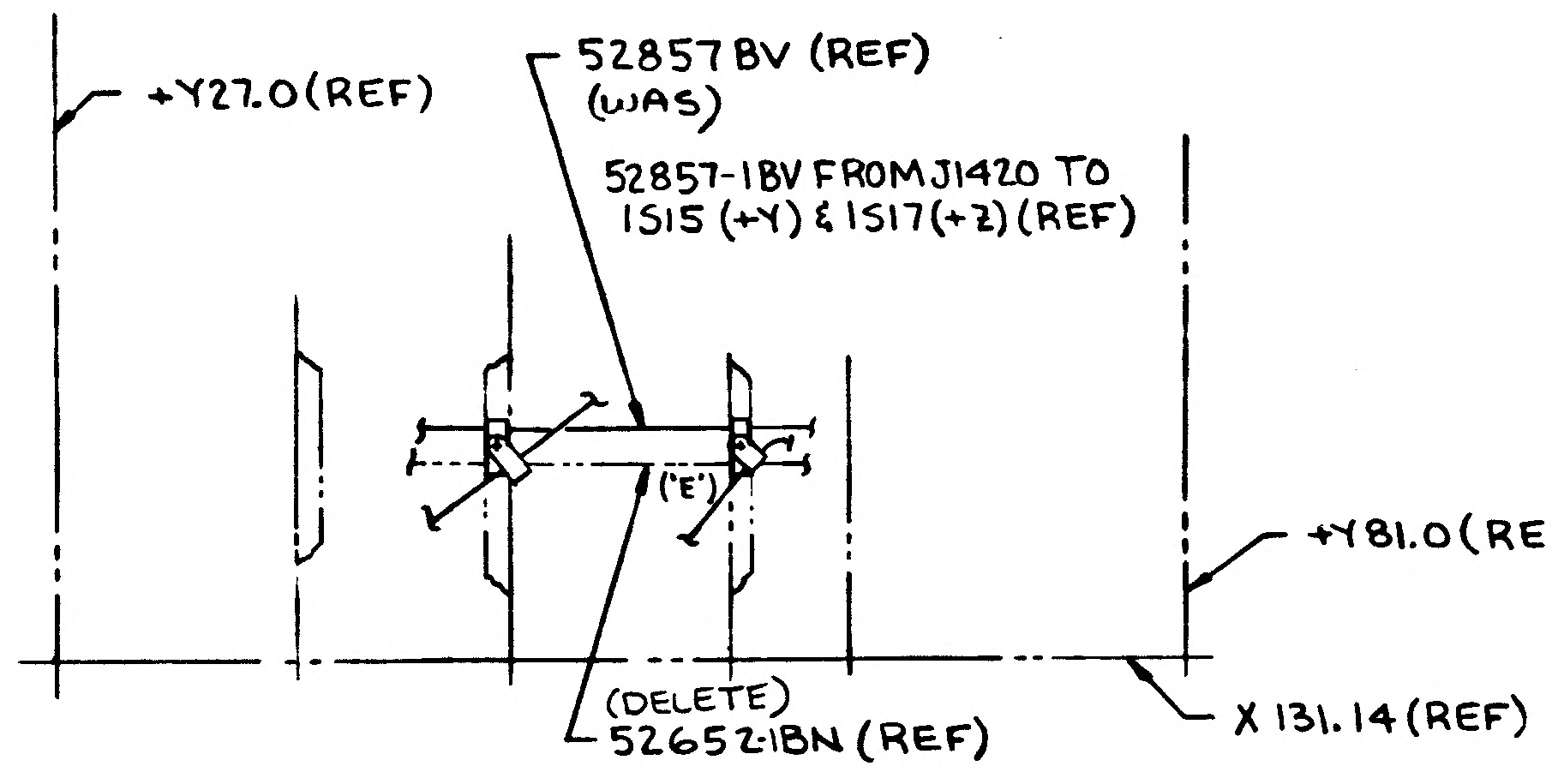
+Y27.0 (REF)
52857BV (REF)
(WAS)
52857-1BV FROM J1420 TO
1S15 (+Y) & 1S17 (+Z) (REF)
('E')
+Y81.0 (REF)
(DELETE)
52652-1BN (REF)
X 131.14 (REF)

VIEW C-C
(ROTATED 90° CCW)
(SH 6, ZONE 29A)

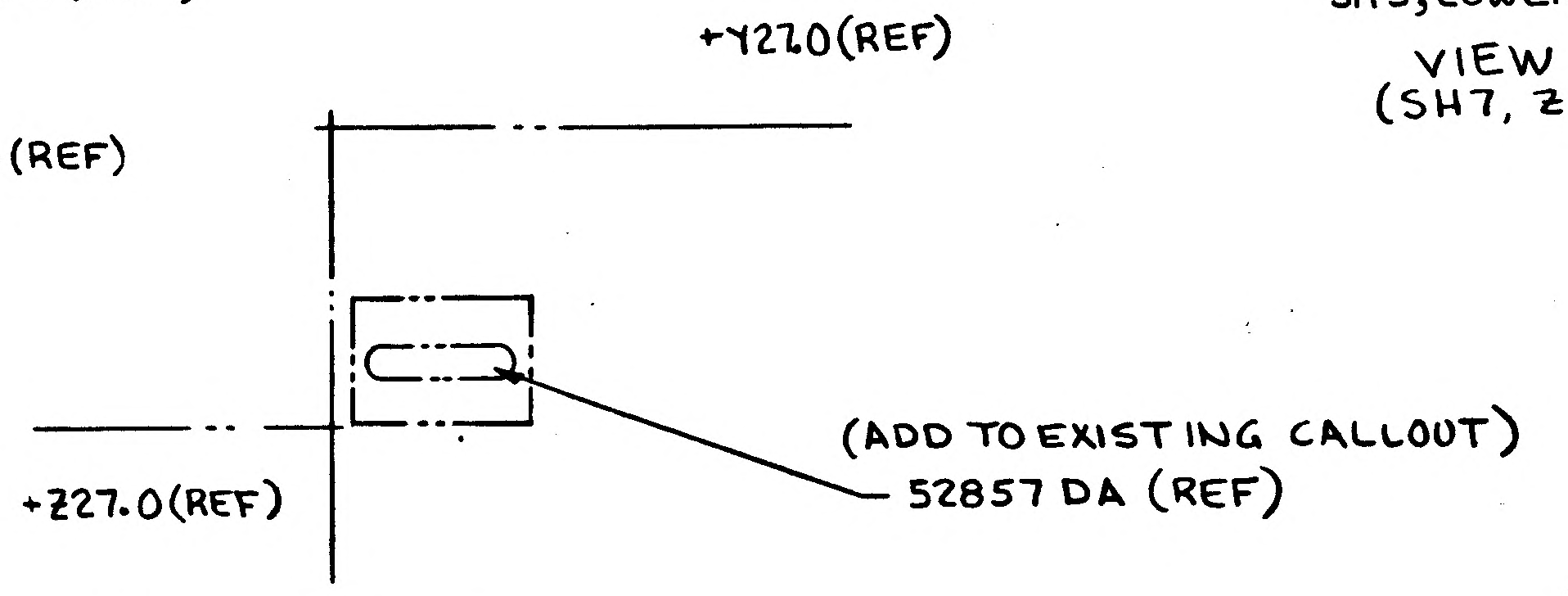
+Y27.0 (REF)
+Z27.0 (REF)
(ADD TO EXISTING CALLOUT)
52857 DA (REF)

VIEW OF UPPER DECK
(SH 4, ZONE 6A)

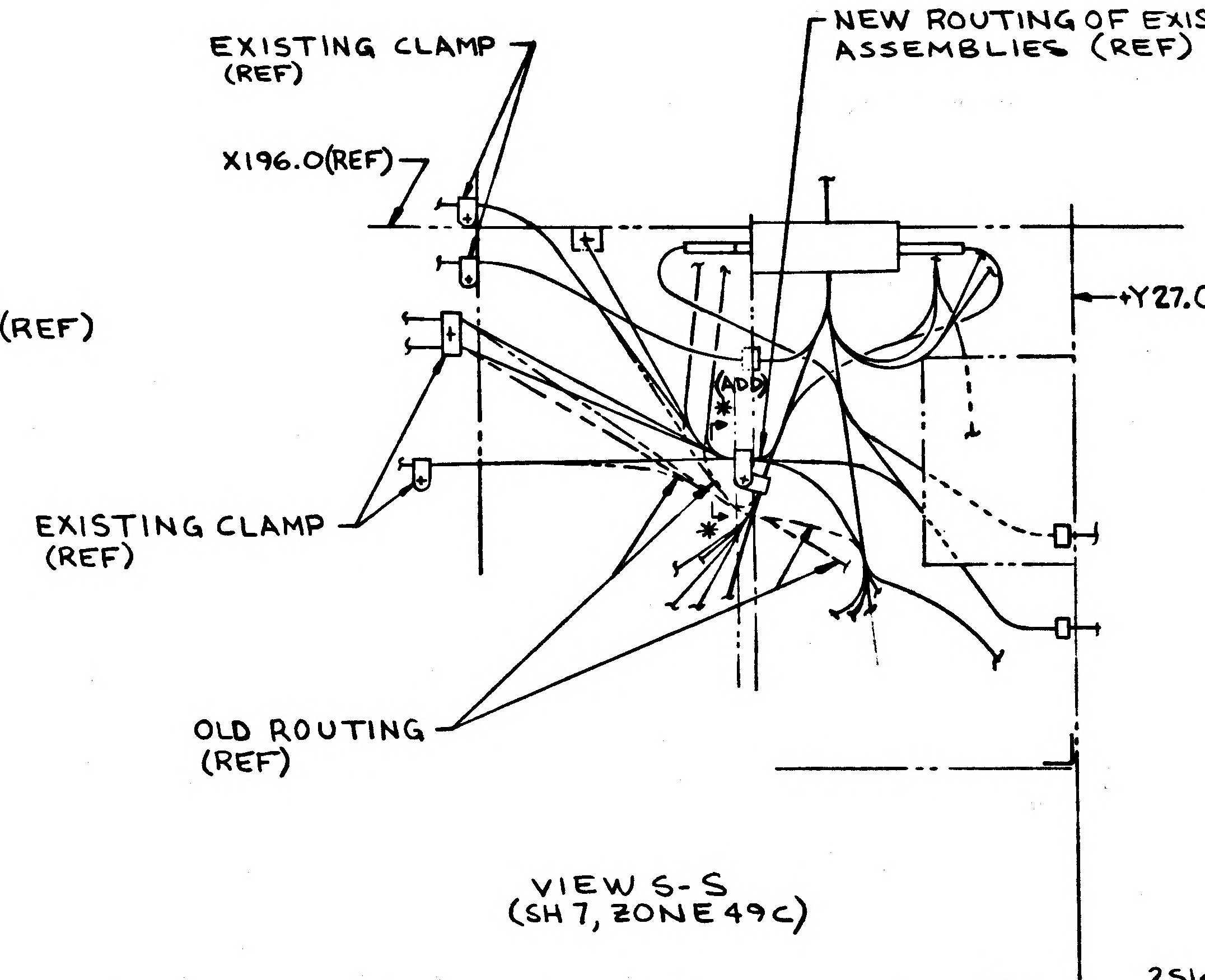
EXISTING CLAMP
(REF)
NEW ROUTING OF EXISTING CABLE
ASSEMBLIES (REF)
X196.0 (REF)
+Y27.0 (REF)
(ADD)
EXISTING CLAMP
(REF)
OLD ROUTING
(REF)

VIEW S-S
(SH 7, ZONE 49C)

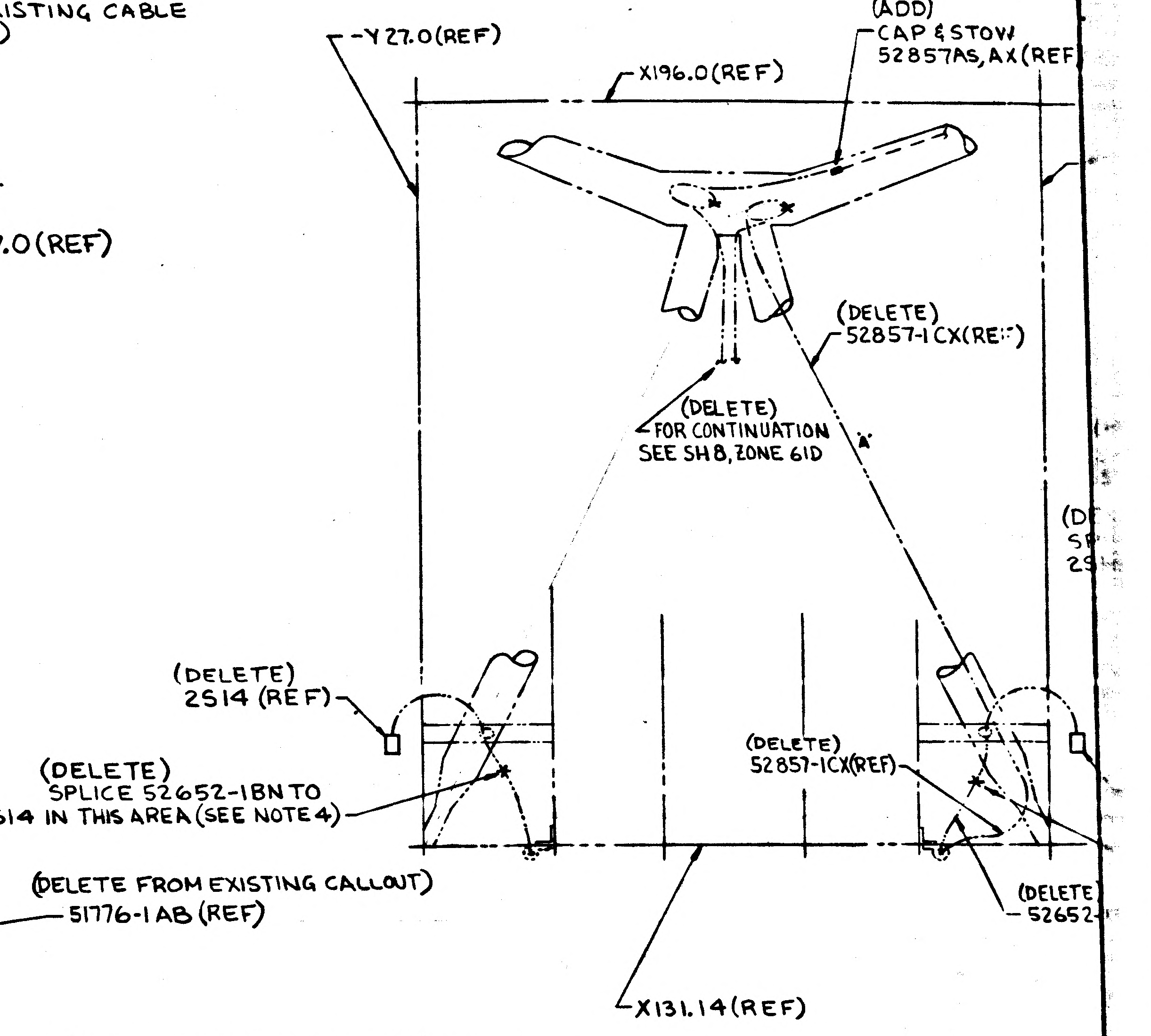
-Y27.0 (REF)
X196.0 (REF)
(ADD)
CAP & STOW
52857AS, AX (REF
(DELETE)
52857-1CX (RE
(DELETE)
FOR CONTINUATION
SEE SH 8, ZONE 61D
(DELETE)
2S14 (REF)
(DELETE)
SPLICE 52652-1BN TO
2S14 IN THIS AREA (SEE NOTE 4)
(DELETE)
52857-1CX (REF)
(DELETE)
52652
X131.14 (REF)

VIEW V-V
(-Z END PANEL)
(SH4, ZONE 11B)

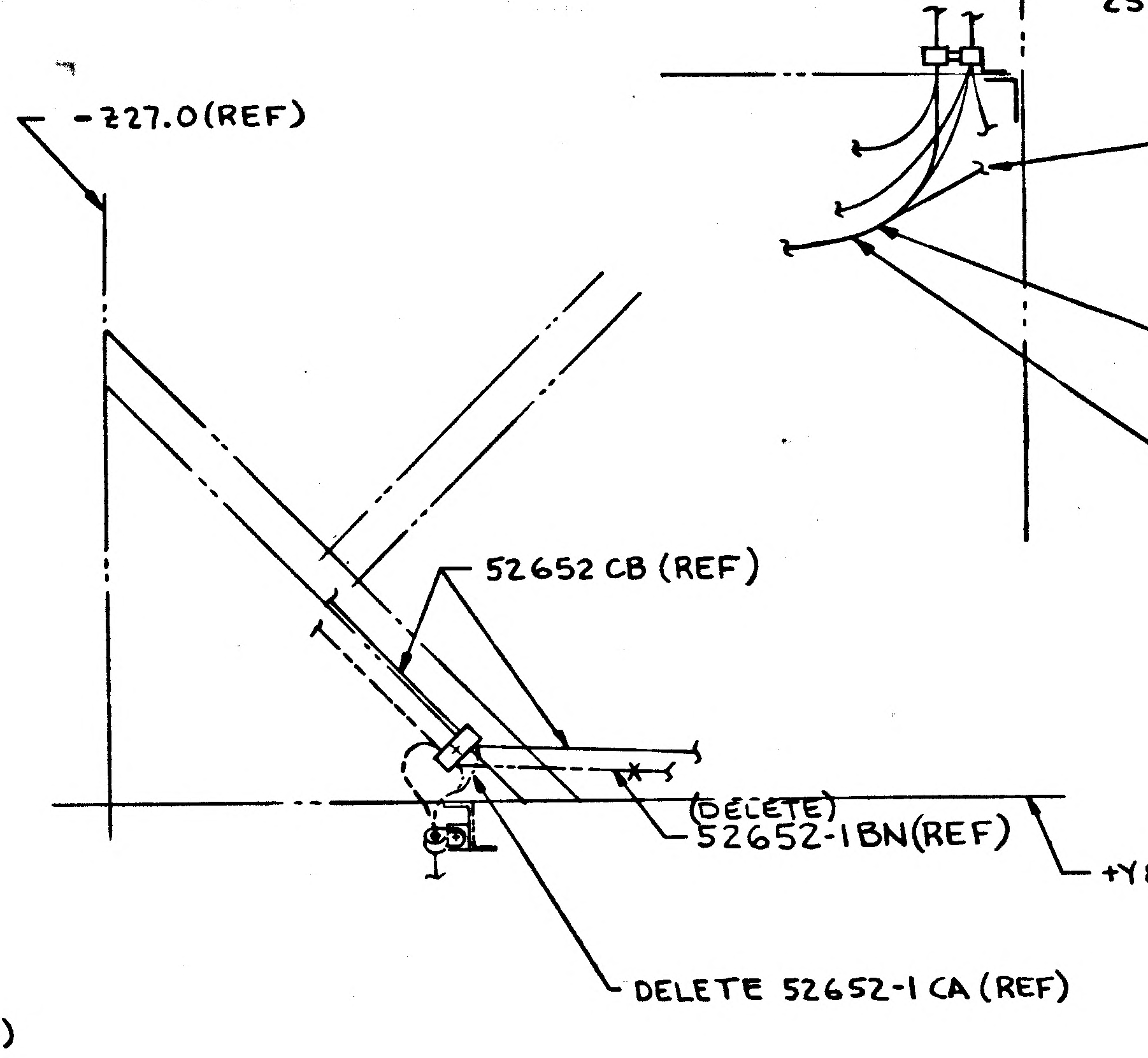
(DELETE FROM EXISTING CALLOUT)
51776-1AB (REF)
(ADD TO EXISTING CALLOUT)
52857 DA (REF)
52652-1AM (REF)
-Z27.0 (REF)
52652 CB (REF)
(DELETE)
52652-1BN (REF)
+Y81.0 (REF)
DELETE 52652-1 CA (REF)

CONTINUATION OF PLAN VIEW BOTTOM DECK
(+Y END)
(SH 5, ZONE 17A)

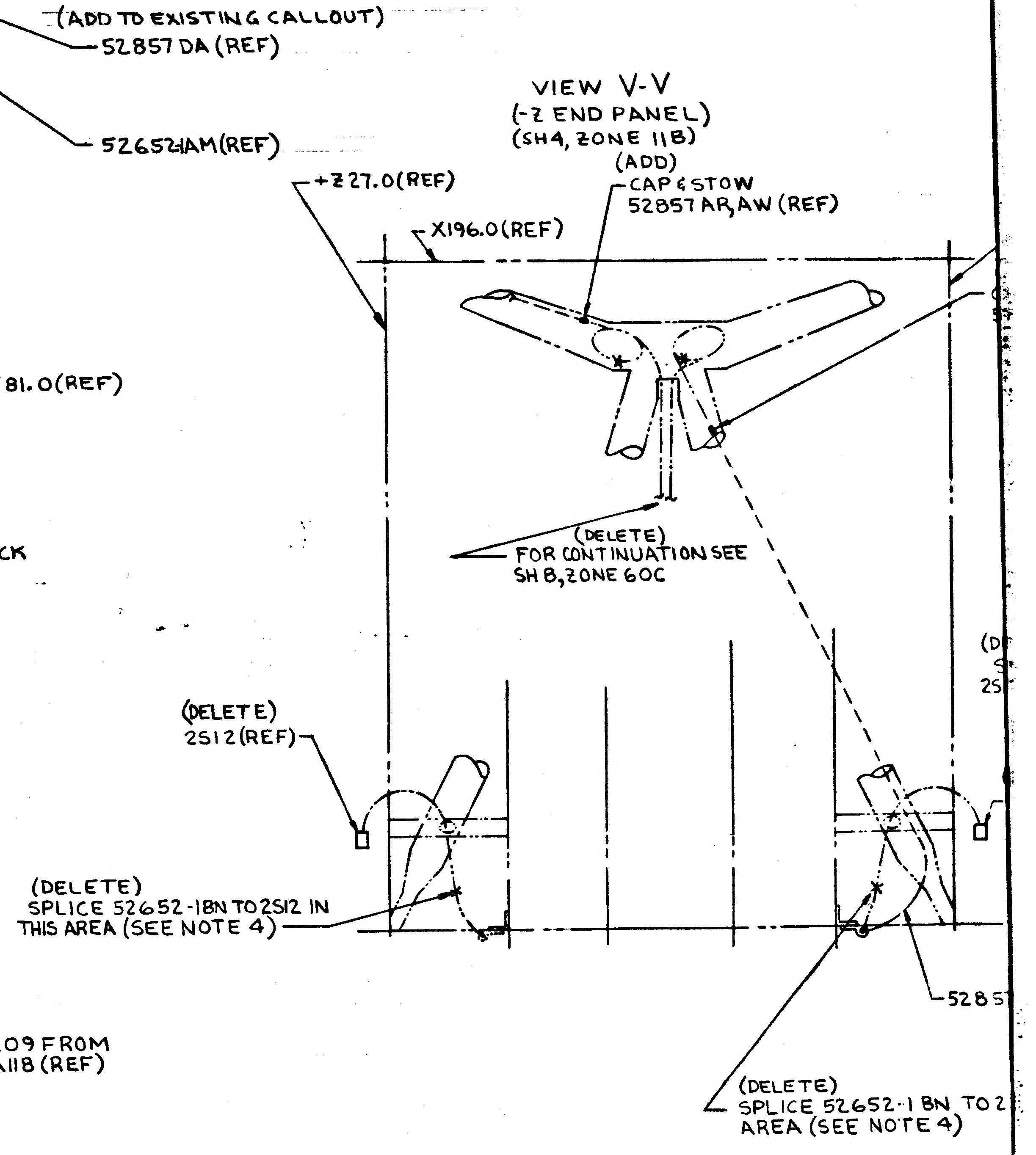
(ADD)
CAP & STOW
52857 AR, AW (REF)
+Z27.0 (REF)
X196.0 (REF)
(DELETE)
FOR CONTINUATION SEE
SH 8, ZONE 60C
(DELETE)
2S12 (REF)
(DELETE)
SPLICE 52652-1BN TO 2S12 IN
THIS AREA (SEE NOTE 4)
5285
(DELETE)
SPLICE 52652-1 BN TO 2
AREA (SEE NOTE 4)

VIEW W-W
(-Y END PANEL)
(SH 4, ZONE 12C)

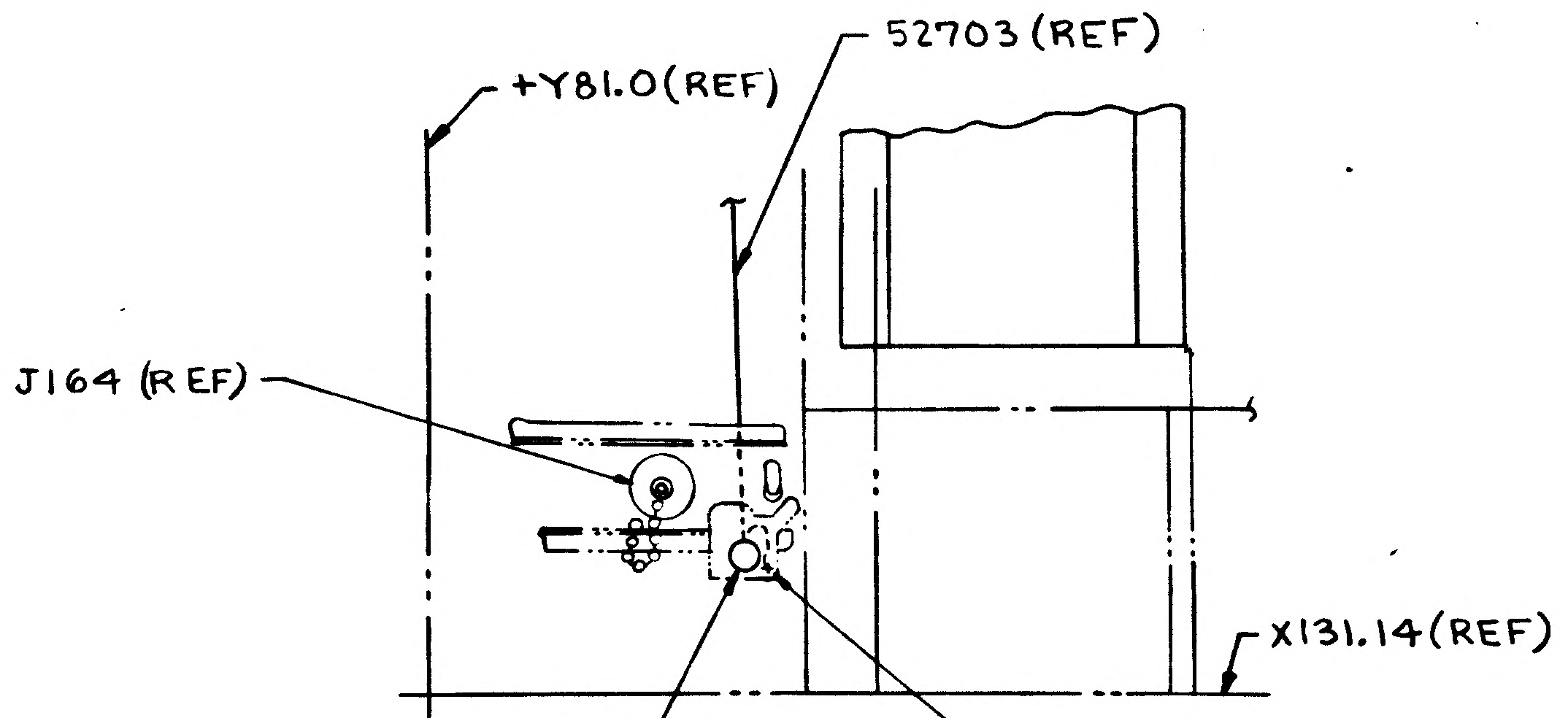
+Y81.0 (REF)
52703 (REF)
J164 (REF)
X131.14 (REF)
J567 (REF)
(ADD)
GT11J-BR08-10
TERM. INSTL
(FAR SIDE)

VIEW S-S
(ROTATED 90° CW)
(SH 7, ZONE 49A)

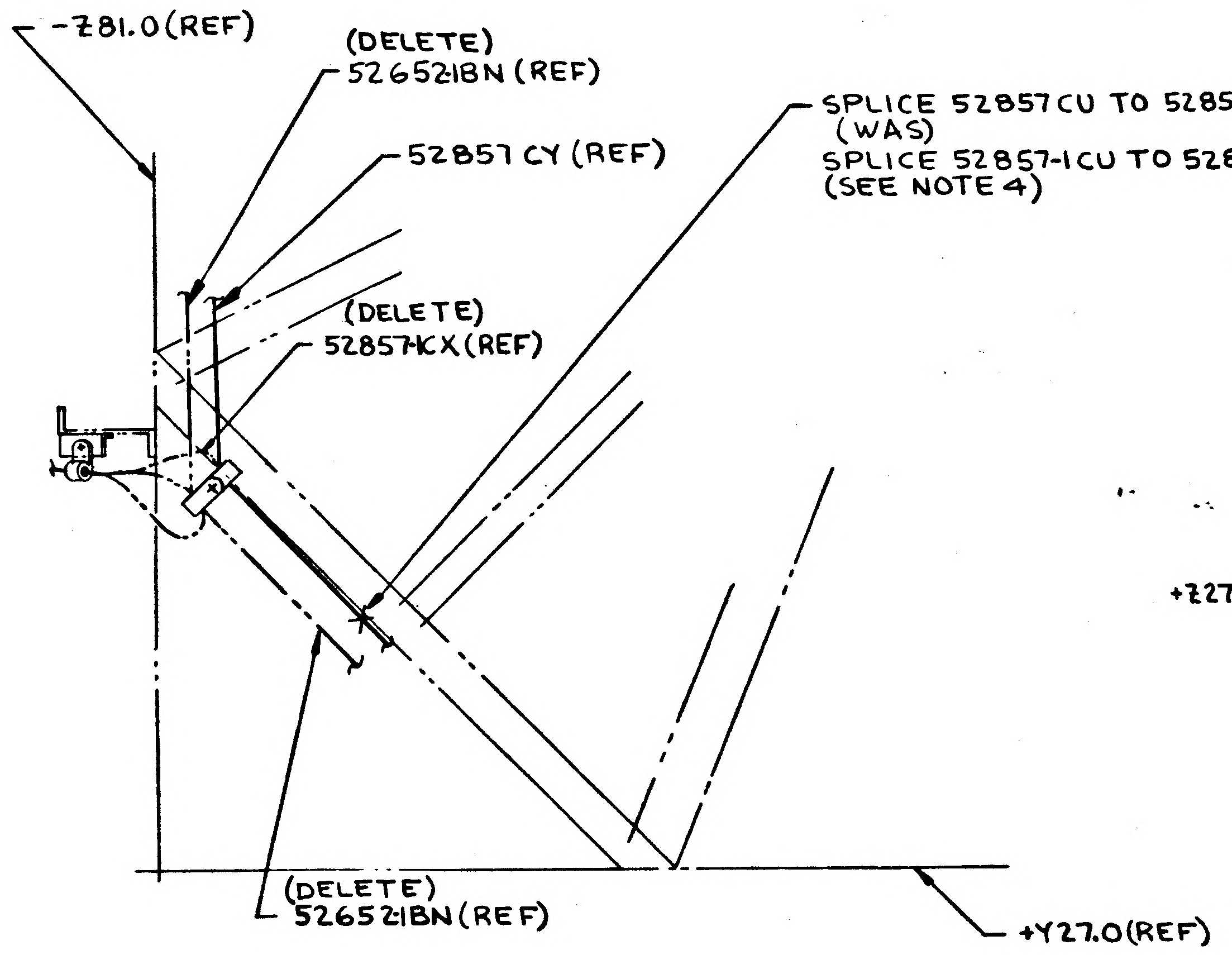
-Z81.0 (REF)
(DELETE)
52652-1BN (REF)
52857 CY (REF)
(DELETE)
52857-1CX (REF)
SPLICE 52857CU TO 52857CY (SEE NOTE 4)
(WAS)
SPLICE 52857-1CU TO 52857-1CX & CY
(SEE NOTE 4)
(DELETE)
52652-1BN (REF)
+Y27.0 (REF)

VIEW LOOKING DOWN
LOWER DECK
(SH5, ZONE 19B)

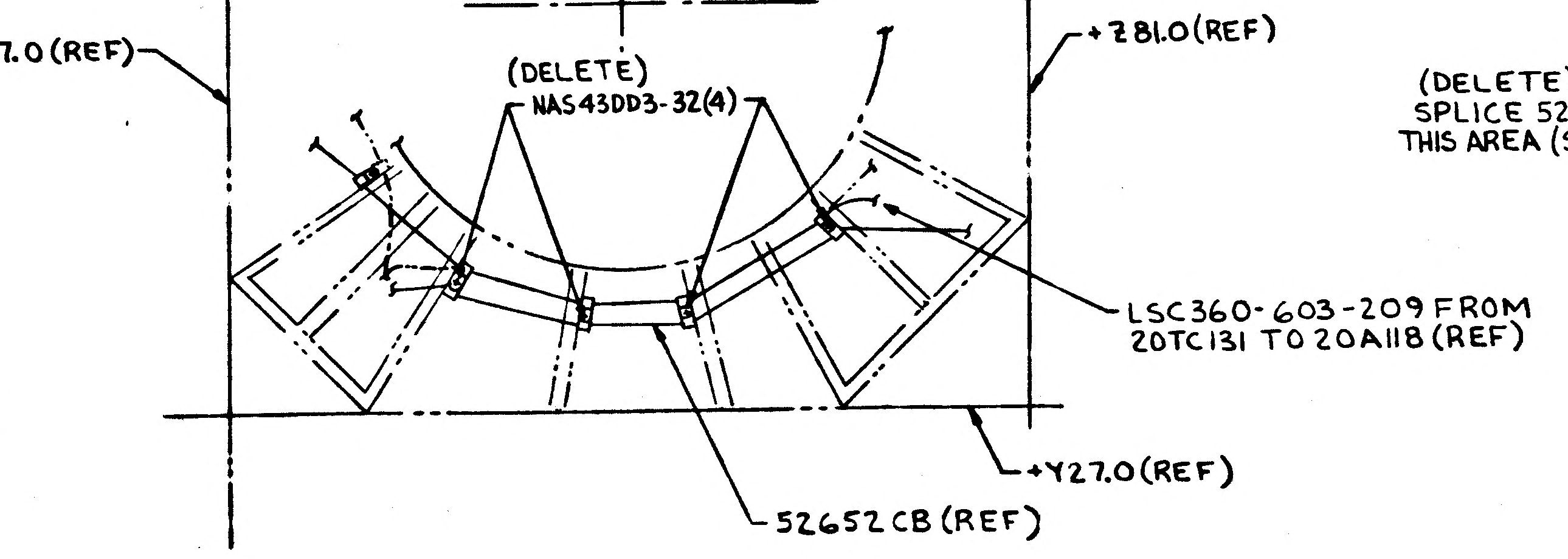
+Z27.0 (REF)
(DELETE)
NAS43DD3-32 (4)
+Z81.0 (REF)
LSC360-603-209 FROM
20TC131 TO 20A118 (REF)
+Y27.0 (REF)
52652 CB (REF)

VIEW LOOKING DOWN
LOWER DECK
(SH5, ZONE 19B)

01/02 NAS 9-1100

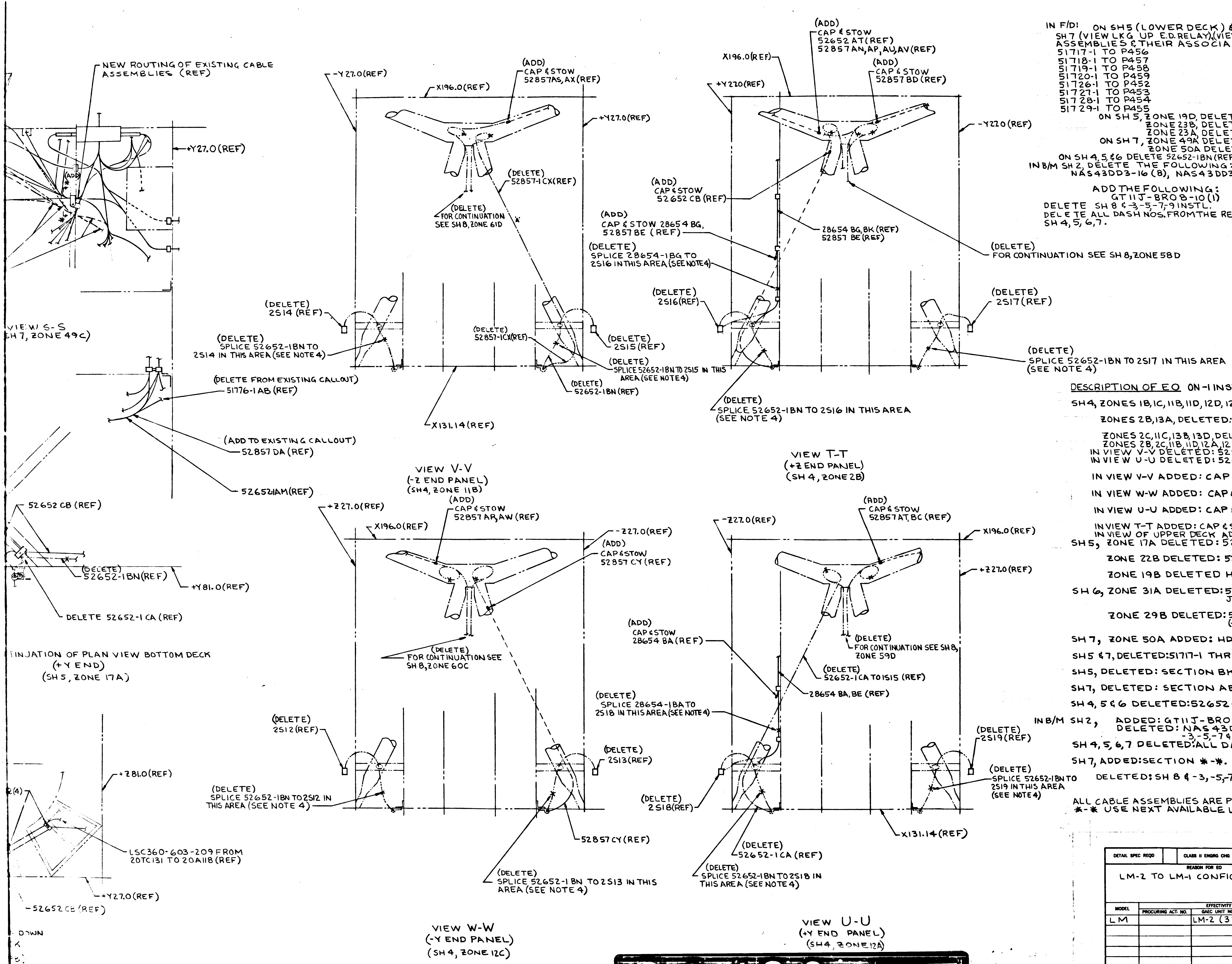
NEW ROUTING OF EXISTING CABLE ASSEMBLIES (REF)
+Y27.0 (REF)
(ADD)
(DELETE FROM EXISTING CALLOUT)
51776-1AB (REF)
(ADD TO EXISTING CALLOUT)
52857 DA (REF)
52652-1AM(REF)
52652 CB (REF)
(DELETE)
52652-1BN(REF)
+Y81.0(REF)
DELETE 52652-1 CA (REF)
+Z81.0(REF)
(4)
LSC360-603-209 FROM 20TC131 TO 20A118 (REF)
+Y27.0(REF)
-52652 CB (REF)
DOWN
-Y27.0(REF)
X196.0(REF)
(ADD)
CAP & STOW
52857AS, AX(REF)
+Y27.0(REF)
(DELETE)
52857-1CX(REF)
(DELETE)
FOR CONTINUATION SEE SH 8, ZONE 61D
(DELETE)
2S14 (REF)
(DELETE)
SPLICE 52652-1BN TO 2S14 IN THIS AREA (SEE NOTE 4)
(DELETE)
52857-1CX(REF)
(DELETE)
2S15 (REF)
(DELETE)
SPLICE 52652-1BN TO 2S15 IN THIS AREA (SEE NOTE 4)
(DELETE)
52652-1BN (REF)
X131.14(REF)
X196.0(REF)
+Y22.0(REF)
(ADD)
CAP & STOW
52652 AT(REF)
52857AN, AP, AU, AV(REF)
(ADD)
CAP & STOW
52857 BD (REF)
-Y22.0 (REF)
(ADD)
CAP & STOW
52652 CB (REF)
(ADD)
CAP & STOW 28654 BG,
52857 BE (REF)
28654 BG, BK (REF)
52857 BE (REF)
(DELETE)
SPLICE 28654-1BG TO 2S16 IN THIS AREA (SEE NOTE 4)
(DELETE)
FOR CONTINUATION SEE SH 8, ZONE 58D
(DELETE)
2S16(REF)
(DELETE)
2S17(REF)
(DELETE)
SPLICE 52652-1BN TO 2S17 IN THIS AREA (SEE NOTE 4)
(DELETE)
SPLICE 52652-1BN TO 2S16 IN THIS AREA (SEE NOTE 4)
+Z27.0(REF)
X196.0(REF)
(ADD)
CAP & STOW
52857 AR, AW (REF)
-Z27.0(REF)
(ADD)
CAP & STOW
52857 CY (REF)
(DELETE)
FOR CONTINUATION SEE SH 8, ZONE 60C
(DELETE)
2S12(REF)
(DELETE)
SPLICE 52652-1BN TO 2S12 IN THIS AREA (SEE NOTE 4)
(DELETE)
2S13(REF)
52857 CY (REF)
(DELETE)
SPLICE 52652-1 BN TO 2S13 IN THIS AREA (SEE NOTE 4)
-Z27.0(REF)
(ADD)
CAP & STOW
52857 AT, BC (REF)
X196.0(REF)
+Z27.0(REF)
(ADD)
CAP & STOW
28654 BA (REF)
(DELETE)
FOR CONTINUATION SEE SH 8, ZONE 59D
(DELETE)
52652-1CA TO 1S15 (REF)
28654 BA, BE (REF)
(DELETE)
SPLICE 28654-1BA TO 2S18 IN THIS AREA (SEE NOTE 4)
(DELETE)
2S19(REF)
(DELETE)
SPLICE 52652-1BN TO 2S19 IN THIS AREA (SEE NOTE 4)
(DELETE)
2S18(REF)
(DELETE)
52652-1CA (REF)
(DELETE)
SPLICE 52652-1BN TO 2S18 IN THIS AREA (SEE NOTE 4)
X131.14(REF)

VIEW S-S
H 7, ZONE 49C)

TINUATION OF PLAN VIEW BOTTOM DECK
(+Y END)
(SH 5, ZONE 17A)

VIEW V-V
(-Z END PANEL)
(SH4, ZONE 11B)

VIEW T-T
(+Z END PANEL)
(SH 4, ZONE 2B)

VIEW W-W
(-Y END PANEL)
(SH 4, ZONE 12C)

VIEW U-U
(+Y END PANEL)
(SH4, ZONE 12A)

IN F/D: ON SH5 (LOWER DECK) &
SH 7 (VIEW LKG UP E.D. RELAY), (VIEW S-S) REMOVE THE FOLLOWING CABLE ASSEMBLIES & THEIR ASSOCIATED HDW FROM THE DRAWING
51717-1 TO P456
51718-1 TO P457
51719-1 TO P458
51720-1 TO P459
51726-1 TO P452
51727-1 TO P453
51728-1 TO P454
51729-1 TO P455
ON SH 5, ZONE 19D, DELETE SECT. BK-BK
ZONE 23B, DELETE SECT. AR-AR
ZONE 23A, DELETE SECT. Z-Z
ON SH 7, ZONE 49A DELETE SECT. AB-AB
ZONE 50A DELETE SECT. AH-AH.
ON SH 4, 5, & 6 DELETE 52652-1BN (REF) & ASSOCIATED HDW.
IN B/M SH 2, DELETE THE FOLLOWING:
NAS43DD3-16 (8), NAS43DD3-24 (12), NAS43DD3-32(7)

ADD THE FOLLOWING:
GT11J-BR08-10 (1)
DELETE SH 8 & -3, -5, -7, -9 INSTL.
DELETE ALL DASH NOS. FROM THE REF CABLE ASSY CALLOUT ON SH 4, 5, 6, 7.

PRINTING INFO ONLY
FULL SIZE SHEET (30×84)* 17.5 SQ FT
1/2 SIZE SHEET AREA (1/4 OF FULL)* 4.5 SQ FT

DESCRIPTION OF EO ON -1 INSTL IN F/D;

SH4, ZONES 1B, 1C, 11B, 11D, 12D, 12A, 13A, DELETED: SPLICE 52652-1BN TO 2S12, THRU 2S19 IN THIS AREA (SEE NOTE 4).
ZONES 2B, 13A, DELETED: SPLICE 28654-1BA TO 2S18, 28654-1BG TO 2S16 IN THIS AREA (SEE NOTE 4).
ZONES 2C, 11C, 13B, 13D, DELETED: CONTINUATION CALLOUT.
ZONES 2B, 2C, 11B, 11D, 12A, 12D, 13A, 13D, DELETED: 2S12 THRU 2S19.
IN VIEW V-V DELETED: 52857-1CX (REF), 52652-1BN (REF)
IN VIEW U-U DELETED: 52652-1CA TO 1S15 (REF), 52652-1 CA (REF).

IN VIEW V-V ADDED: CAP & STOW 52857AS, AX (REF)

IN VIEW W-W ADDED: CAP & STOW 52857AR, AW, CY (REF)

IN VIEW U-U ADDED: CAP & STOW 52857AT, BC (REF), 28654 BA (REF)

IN VIEW T-T ADDED: CAP & STOW 52652 AT, CB (REF), 52857AN, AP, AU, AV, BD, BE (REF), 28654 BG (REF).
IN VIEW OF UPPER DECK ADDED 52857DA.
SH5, ZONE 17A DELETED: 52652-1CA (REF).

ZONE 22B DELETED: 52857-1CX(REF), 52652-1BN (REF).

ZONE 19B DELETED HDW: NAS43DD3-32(4).

SH 6, ZONE 31A DELETED: 52652-1BN (REF), 52857 CU(REF) WAS 52857-1CU TO 1S18 & 1S16 FROM J1421(REF).

ZONE 29B DELETED: 52652-1BN(REF), 52857 BV (REF) WAS 52857-1BV FROM J1420 TO 1S15 (+Y) & 1S17 (+Z)(REF).

SH 7, ZONE 50A ADDED: HDW; ZONE 46A DELETED: LEADER; ADDED: CAP & STOW 52652 BN(REF). ADDED 52857 DA, DELETED: 51776-1AB.
SH5 & 7, DELETED: 51717-1 THRU 51720-1 & 51726 THRU 51729-1.

SH5, DELETED: SECTION BK-BK, AR-AR, Z-Z.

SH7, DELETED: SECTION AB-AB, AH-AH.

SH 4, 5 & 6 DELETED: 52652-1BN (REF) & ASSOCIATED HDW.

IN B/M SH2, ADDED: GT11J-BR08-10 (1)
DELETED: NAS43DD3-16 (8), NAS43DD3-24 (12), NAS43DD3-32 (7), -3, -5, -7 & 9 INSTL.
SH 4, 5, 6, 7 DELETED: ALL DASH NOS. FROM THE REF CABLE ASSY CALLOUT.

SH7, ADDED: SECTION ✱-✱.

DELETED: SH 8 & -3, -5, -7 & -9 INSTL.

ALL CABLE ASSEMBLIES ARE PREFIXED BY LDW390:
✱-✱ USE NEXT AVAILABLE LETTERS.

B

DETAIL SPEC REQD		CLASS II ENGRG CHG		CLASS I ENGRG CHG	✓	LCD 2223(CCA745), 1767, 2187	CONTROL INFO NO. LDW2[illegible]0A9582
REASON FOR EO LM-2 TO LM-1 CONFIGURATION				DESCRIPTION OF EO SEE ABOVE			GRUMMAN EO RELEASE JK 10/25

MODEL	EFFECTIVITY PROCURING ACT. NO.	EFFECTIVITY GAEC UNIT NO.	EFFECTIVITY SUB CONTR UNIT NO.
LM		LM-2 (32)	

DRAWING REVISION REQD: REVISE DWG	RECORD EO	DISPOSITION OF PARTS: REWORK	SCRAP	BY / DATE	SUPPORT	RELIAB GROUP	GROUP LEADER	STRESS GROUP	LIAISON ENGRG	PROJ ENGR	
✓		✓		10/18/67 VDI			10/17/67	10/18/67		10/24/67	10-25-67

PRIORITY	DRAWING TITLE	ENGINEERING ORDER DRAWING NO.	EO NO.
C	LINES INSTALLATION ELECTRONIC DESCENT STAGE	LDW280-[illegible]2607	D2

10/16 X1153 ISSUED BY R. EBERLE	SECTION VDI (EQUIP LINES) GROUP NO. 332 PL 25	CODE IDENT NO. 26512	GRUMMAN AIRCRAFT ENGINEERING CORP BETHPAGE, L. I., N. Y.

ENG 32.3 REV 3-65

02/02 NAS 9-1100

ENG 32.1 REV 3-65

GRUMMAN AIRCRAFT ENGINEERING CORP.
CODE IDENT NO. 26512
ENGINEERING ORDER

DWG. NO. LDW280-52607
EO NO. D3
CONTROL INFO NO. LMS-17205

ON-1, ADD MTG HOLE AND HARDWARE AS SHOWN

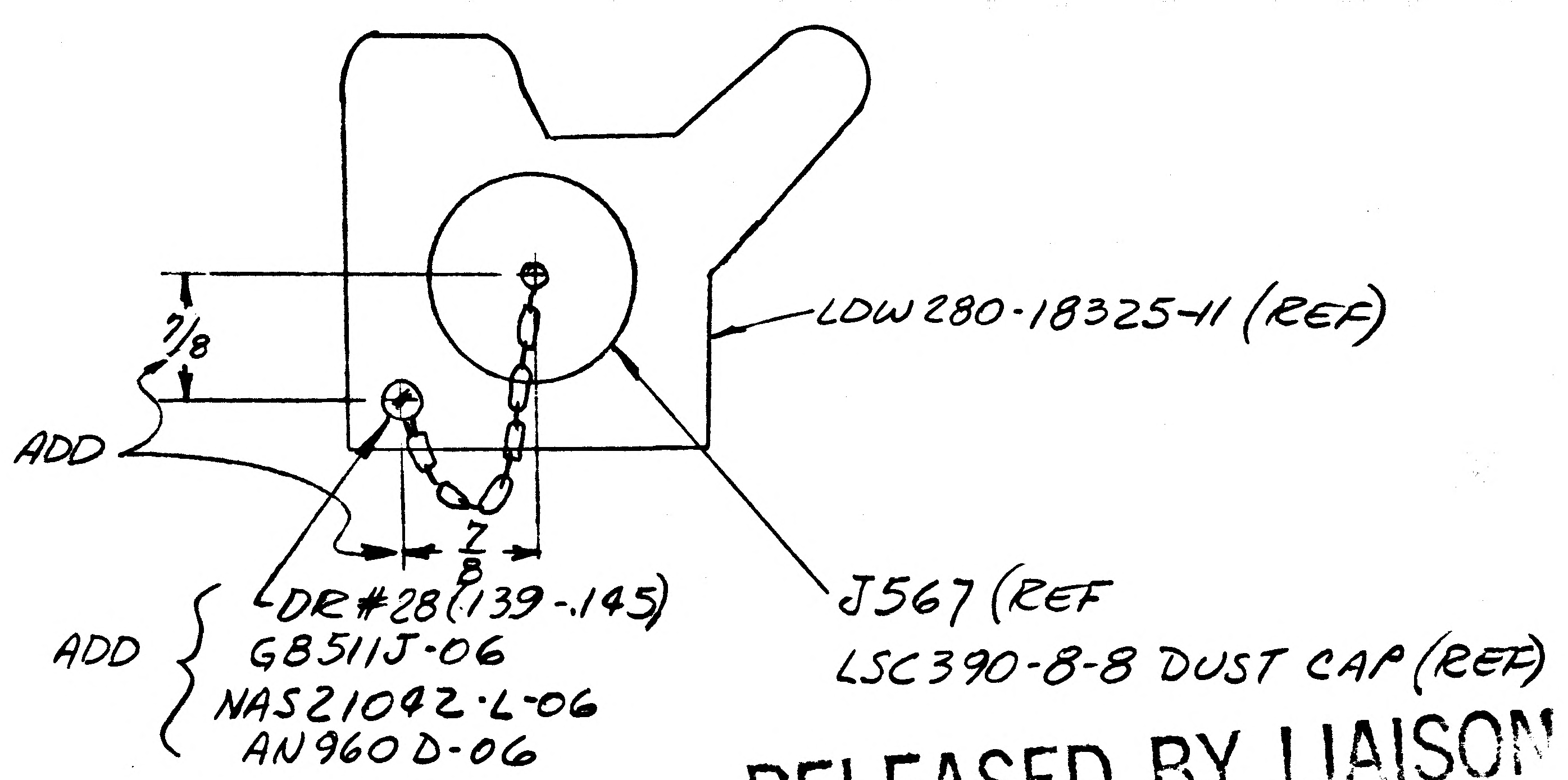
LDW280-18325-11 (REF)
7/8
ADD
7/8
DR #28 (.139-.145)
ADD
GB511J-06
NAS21042-L-06
AN960D-06
J567 (REF
LSC390-8-8 DUST CAP (REF)

RELEASED BY LIAISON

DETAIL SPEC REQ	☐	CL II ENGRG CHG	☑	CL I ENGRG CHG	☐	5

REASON FOR EO: PROVIDE MTG HARDWARE AND HOLE FOR DUST CAP CHAIN

DESCRIPTION OF EO: ON-1, ADDED GB511J-06, NAS21042-L06 + AN960D-06 AND # 28 MOUNTING HOLE

GAEC C EO RELEASE: JK

MODEL	EFFECTIVITY PROCURING ACTIVITY NO.	GAEC UNIT NO.	SUB CONTR UNIT NO.
LM		LM 2 (32)	

DRAWING CHANGE REQD: REVISE DWG ✓ RECORD EO
DISPOSITION OF PARTS: REWORK ✓ SCRAP

APPROVED BY								
DATE	11/4/67			—	10-30-67	10-27-67	11/4/67	10 30 67
	VDI	SUPPORT	RELIAB. GROUP	GROUP LEADER	STRESS GROUP	LIAISON ENGRG	PROJ ENGRG	~~QUFF~~

PRIORITY: C
DRAWING TITLE: LINES INSTALLATION ELEC D/S
DRAWING NO.: LDW280-52607
EO NO.: D3

ISSUED BY LIAISON J. PICCIOTTI SECTION EQUIP LINES GROUP NO. 332 PL 25

01

NAS 9-1100

ENG 32.1 REV 3-65

GRUMMAN AIRCRAFT ENGINEERING CORP.
CODE IDENT NO. 26512
ENGINEERING ORDER

DWG. NO. LDW280 52607
EO NO. D4
CONTROL INFO NO. LM 5-14737

RELEASED BY LIAISON

ON-1
ON - SH 6.00 ZONE B32, ADD CLAMPING AS SHOWN.

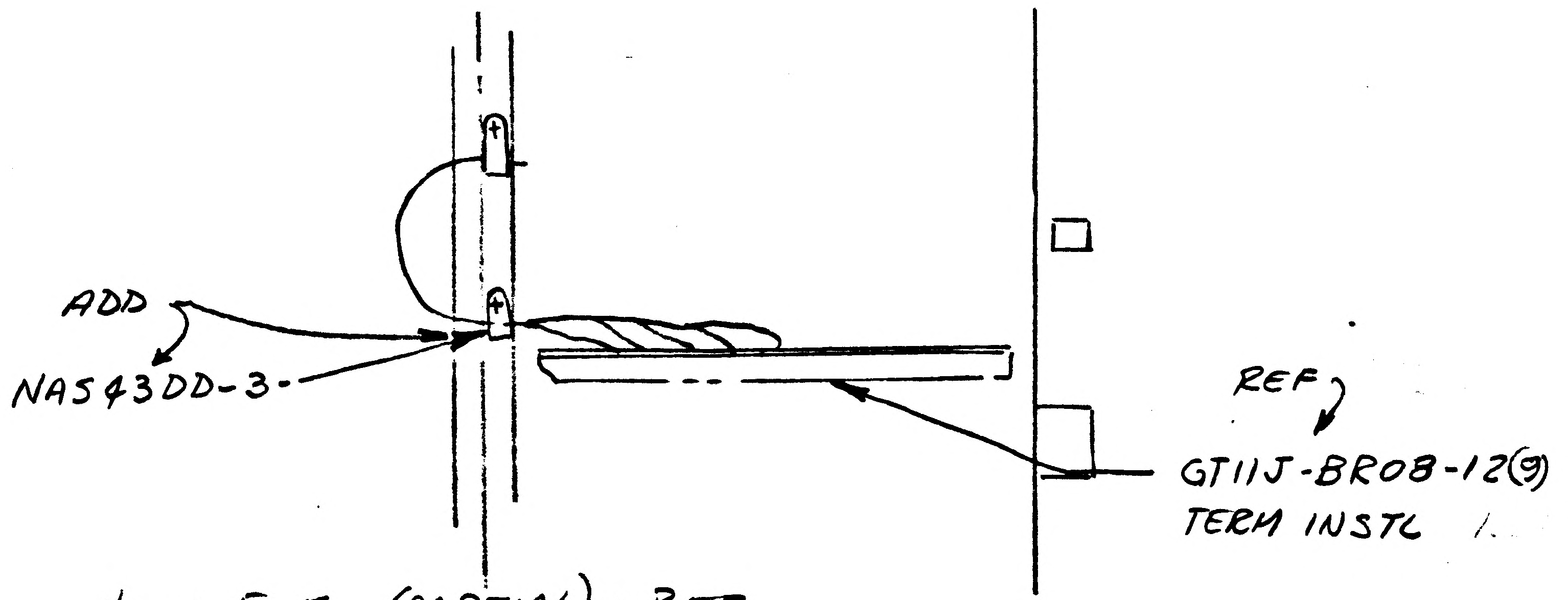

VIEW E-E (PARTIAL) ← REF

DETAIL SPEC REQ	☐	CL II ENGRG CHG	✓	CL I ENGRG CHG	☐

5

REASON FOR EO: CLAMPING NECESSARY TO PREVENT CHAFING

DESCRIPTION OF EO: ON-1 ADDED NAS 43DD-3 TO F/O & B/M

GAEC EO RELEASE: JK

MODEL	EFFECTIVITY		
	PROCURING ACTIVITY NO.	GAEC UNIT NO.	SUB CONTR UNIT NO.
LM		LM 2(32)	

DRAWING CHANGE REQD		DISPOSITION OF PARTS	
REVISE DWG	RECORD EO	REWORK	SCRAP
✓		✓	

	APPROVED BY	SUPPORT	RELIAB. GROUP	GROUP LEADER	STRESS GROUP	LIAISON ENGRG	PROJ ENGRG	~~GOVT~~
				—	JF	CH	WRB	
DATE	11/1/67			—	10-30-67	10-27-67	11/1/67	10-30-67
	VD1							

PRIORITY: C
DRAWING TITLE: LINES INSTALLATION ELEC D/S
DRAWING NO.: LDW280-52607
EO NO.: D4

ISSUED BY LIAISON J. PICCIOTTI X86755 SECTION VD1 GROUP NO. 280 PL 5

01 NAS 9-1100

ENG 32.1 REV 3-65

GRUMMAN AIRCRAFT ENGINEERING CORP.
CODE IDENT NO. 26512
ENGINEERING ORDER *

DWG. NO. LDW280-52607		EO NO. D5
CONTROL INFO NO. LM-5-14765		

THIS IS A REVISION OF EO "D-4"

ON-1

NAS43DD-3 S/B GC500AA-4

RELEASED BY LIAISON

DETAIL SPEC REQ		CL II ENGRG CHG	✓	CL I ENGRG CHG		5

REASON FOR EO: CLAMPING NECESSARY TO PREVENT CHAFING

REFERENCE EO D4 DESCRIPTION OF EO
ON-1 GC500AA-4 WAS NAS43DD-3

(B) GAEC EO RELEASE C
JK

MODEL	EFFECTIVITY: PROCURING ACTIVITY NO.	GAEC UNIT NO.	SUB CONTR UNIT NO.
LM		LM-2(32)	

DRAWING CHANGE REQD: REVISE DWG	RECORD EO	DISPOSITION OF PARTS: REWORK	SCRAP
✓		✓	

	VDI	SUPPORT	RELIAB. GROUP	GROUP LEADER	STRESS GROUP	LIAISON ENGRG	PROJ ENGRG	[illegible]
APPROVED BY				—	JFJ	CR		
DATE	11/2/67			—	11-1-67	11-1-67	11/2/67	11-1-67

PRIORITY	DRAWING TITLE	DRAWING NO.	EO NO.
C	LINES INSTALLATION ELEC. D/S	LDW280-52607	D5

ISSUED BY LIAISON (H. BABCOCK) x 86755 SECTION VDI GROUP NO. 280 PL 5

01

NAS 9-1100

GRUMMAN AIRCRAFT ENGINEERING CORP. CODE IDENT NO. 26512 **ENGINEERING ORDER**	DWG. NO. LDW280-52607	EO NO. D6	
	CONTROL INFO NO. LDW280B-0255		

ENG 32.2 REV 3-65

01

NAS 9-1100

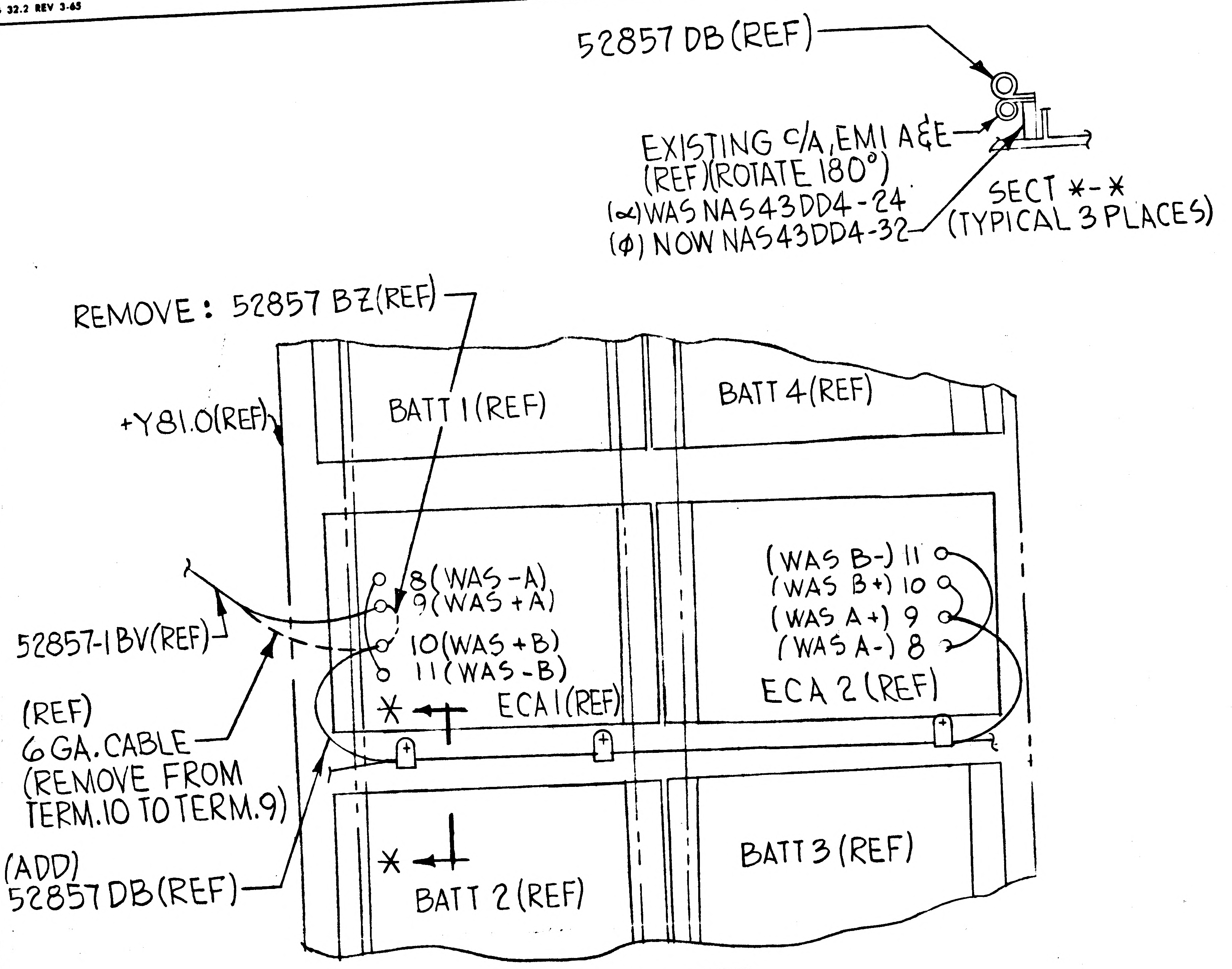
52857 DB (REF)
EXISTING C/A, EMI A&E (REF)(ROTATE 180°)
(∝) WAS NAS43DD4-24
(ϕ) NOW NAS43DD4-32
SECT *-* (TYPICAL 3 PLACES)
REMOVE: 52857 BZ (REF)
+Y81.0 (REF)
BATT 1 (REF)
BATT 4 (REF)
8 (WAS -A)
9 (WAS +A)
10 (WAS +B)
11 (WAS -B)
ECA 1 (REF)
(WAS B-) 11
(WAS B+) 10
(WAS A+) 9
(WAS A-) 8
ECA 2 (REF)
52857-1BV (REF)
(REF) 6 GA. CABLE (REMOVE FROM TERM. 10 TO TERM. 9)
(ADD) 52857 DB (REF)
*
*
BATT 2 (REF)
BATT 3 (REF)

VIEW S-S

LDW280-52607-1INSTL
(SH 7.00 ZONE 50B)

IN DETAIL M, SH 7.00 ZONE 47A, DELETE CABLE ASSY 21966 (REF)

IN DETAIL N, SH 7.00 ZONE 46A, DELETE CABLE ASSY 21964 (REF)

IN DETAIL P, SH 7.00 ZONE 46A, DELETE CABLE ASSY 21956 (REF)

IN DETAIL Q, SH 7.00 ZONE 45A, DELETE CABLE ASSY 21962 (REF)

DESCRIPTION OF EO (CONT)

DELETED NAS43DD4-24(3) FROM F/D & B/M ADDED NAS43DD4-32(3) TO F/D & B/M ROTATED EXISTING C/A, EMI A & C, CLAMP BY 180°, 3 PLACES ADDED CLAMP, 3 PLACES. REMOVED C/A 21966 (REF) FROM DET M, C/A 21964 (REF) FROM DET N, C/A 21956 (REF) FROM DET P & C/A 21952 (REF) FROM DET Q.

(∝) DELETE FROM B/M
(ϕ) ADD TO B/M
* NEXT AVAILABLE SECTION LTR
CLAMP PER LPC 280-23

DETAIL SPEC REQ ☐	CL II ENGRG CHG ☐	CL I ENGRG CHG ✓	LCD 2223 CCA 745		5
REASON FOR EO: NOT NECESSARY FOR UNMANNED MISSION			DESCRIPTION OF EO: ON -1INSTL REMOVED 52857 BZ (REF). MOVED 6 GA. CABLE FROM TERM. 10 TO TERM. 9 ADDED 52857 DB (REF).		GAEC EO RELEASE: JK 11/6/67

MODEL	PROCURING ACTIVITY NO.	GAEC UNIT NO.	SUB CONTR UNIT NO.	DRAWING CHANGE REQD: REVISE DWG	RECORD EO	DISPOSITION OF PARTS: REWORK	SCRAP
LM		LM2(32)		✓		✓	

APPROVED BY		SUPPORT	RELIAB. GROUP	GROUP LEADER	STRESS GROUP	LIAISON ENGRG	PROJ ENGRG	
JAP				JW 11/3/67	11/3/67		11/3/67	11-4-67
DATE 11/3/67								
E	VDI							

PRIORITY	DRAWING TITLE	DRAWING NO.	EO NO.
C	LINES INSTALLATION - ELECTRONIC DESCENT STAGE	LDW280-52607	D6

11/4
ISSUED BY H. HELLER (X1154) (11-1-67)   SECTION VDI (EQUIP LINES   GROUP NO. 332   PL 25

ENG 32.1 REV 3-65

GRUMMAN AIRCRAFT ENGINEERING CORP.
CODE IDENT NO. 26512
ENGINEERING ORDER

DWG. NO. LDW280-52607 | EO NO. D7
CONTROL INFO NO. LM-5-14823

CANCEL EOs D4 & D5

RELEASED BY LIAISON

DETAIL SPEC REQ		CL II ENGRG CHG	✓	CL I ENGRG CHG	

REASON FOR EO: ACCOMPLISHED ON PIRR TAG B4889 -(05-0664)

DESCRIPTION OF EO: CANCELLED EO D4 & D5

Ⓡ GAEC EO RELEASE: 5 JK

MODEL	EFFECTIVITY: PROCURING ACTIVITY NO.	GAEC UNIT NO.	SUB CONTR UNIT NO.
LM		LM 2(32)	

DRAWING CHANGE REQD: REVISE DWG	RECORD EO	DISPOSITION OF PARTS: REWORK	SCRAP
✓		✓	

		SUPPORT	RELIAB. GROUP	GROUP LEADER	STRESS GROUP	LIAISON ENGRG	PROJ ENGRG	~~GOVT~~
APPROVED BY				—				
DATE	11/14/67 VDI			—	11-9-67	11-9-67	11/14/67	11-9-67

PRIORITY	DRAWING TITLE	DRAWING NO.	EO NO.
C	LINES, INSTALLATION ELEC D/S	LDW280-52607	D7

ISSUED BY LIAISON J. PICCIOTTI X86755 SECTION VDI GROUP NO. 280 PL 5

01

NAS 9-1100

ENG 32.2 REV 3-65

B

GRUMMAN AIRCRAFT ENGINEERING CORP.
CODE IDENT NO. 26512
ENGINEERING ORDER

DWG. NO.	LDW280-52607	EO NO.	E1
CONTROL INFO NO.	LM-5-14860		

01

NAS 9-1100

ON-1 F/D SH.700 ZONE B-42 & 43

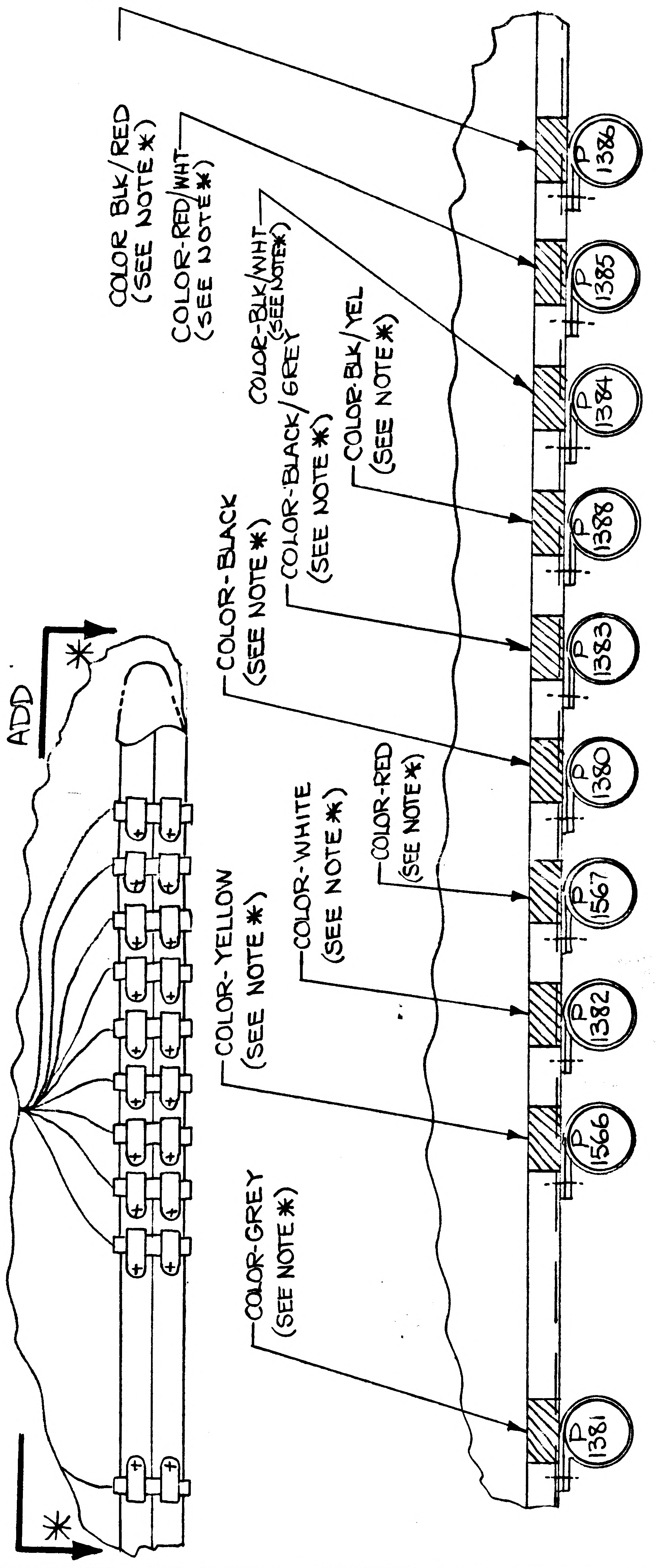
ADD
✱
✱
COLOR BLK/RED (SEE NOTE ✱)
COLOR-RED/WHT (SEE NOTE ✱)
COLOR-BLK/WHT (SEE NOTE ✱)
COLOR-BLACK/GREY (SEE NOTE ✱)
COLOR-BLK/YEL (SEE NOTE ✱)
COLOR-BLACK (SEE NOTE ✱)
COLOR-YELLOW (SEE NOTE ✱)
COLOR-WHITE (SEE NOTE ✱)
COLOR-RED (SEE NOTE ✱)
COLOR-GREY (SEE NOTE ✱)
P 1386
P 1385
P 1384
P 1388
P 1383
P 1380
P 1567
P 1382
P 1566
P 1381

(ADD) VIEW ✱✱

RELEASED BY LIAISON

IN NOTES (ADD)

NOTE ✱. APPLY 3M SERIES 400 VELVET COATING TO BRACKET PER LSP14-4503, ½" X ¼" APPROX. FOR COLORS SEE VIEW ✱✱. COLOR PART NO'S: GREY-*401-B2, YELLOW-*401-F1, WHITE-*401-A10, RED-*403-D10, BLACK-*403-C10. FOR COLOR CODING WITH TWO(2) COLORS USE ¼"X¼" DIM. SIDE BY SIDE.

✱ = NEXT AVAILABLE NOTE NUMBER.
✱✱ = NEXT AVAILABLE VIEW LTR.

RELEASED BY LIAISON

DETAIL SPEC REQ	CL II ENGRG CHG ✓	CL I ENGRG CHG		
REASON FOR EO: COLOR CODING REQ'D TO AVOID MISMATING OF CONNECTORS	DESCRIPTION OF EO: ON-1 ADDED VIEW ✱✱ & NOTE ✱			GAEC EO RELEASE (5) JC

MODEL	PROCURING ACTIVITY NO.	GAEC UNIT NO.	SUB CONTR UNIT NO.	DRAWING CHANGE REQD: REVISE DWG	RECORD EO	DISPOSITION OF PARTS: REWORK	SCRAP
LM		LM-2(32)		✓		✓	

APPROVED BY	JAB			—	JFF	JFF	JAP	
DATE	12/2/67				11-18-67	11-18-67	12/2/67	11/18/67
	VD1	SUPPORT	RELIAB. GROUP	GROUP LEADER	STRESS GROUP	LIAISON ENGRG	PROJ ENGRG	~~CONT~~

PRIORITY	DRAWING TITLE	DRAWING NO.	EO NO.
C	LINES INSTALLATION ELECTRONIC DESCENT STAGE	LDW280-52607	E1

ISSUED BY LIAISON (H. BABCOCK) x9491 SECTION VD1 GROUP NO. 280 PL 5

01 NAS 9-1100

B

ENG 32.2 REV 3-65

GRUMMAN AIRCRAFT ENGINEERING CORP.
CODE IDENT NO. 26512
ENGINEERING ORDER

DWG. NO. LDW280-52607 | EO NO. E2
CONTROL INFO NO. LDW280B0383

ON-1

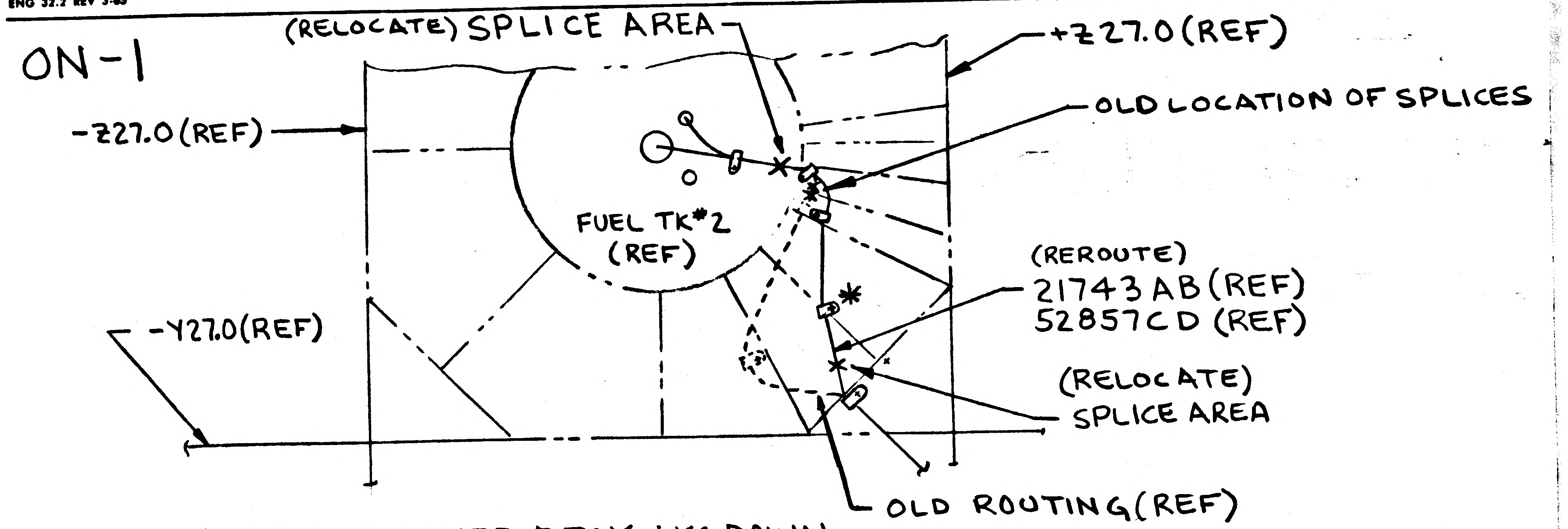
(RELOCATE) SPLICE AREA
+Z27.0 (REF)
-Z27.0 (REF)
OLD LOCATION OF SPLICES
FUEL TK #2 (REF)
(REROUTE)
21743AB (REF)
52857CD (REF)
-Y27.0 (REF)
(RELOCATE)
SPLICE AREA
*
OLD ROUTING (REF)

VIEW OF LOWER DECK LKG DOWN
(SH 5, ZONE 20C)

THIS IS A REVISION OF E.O. D2

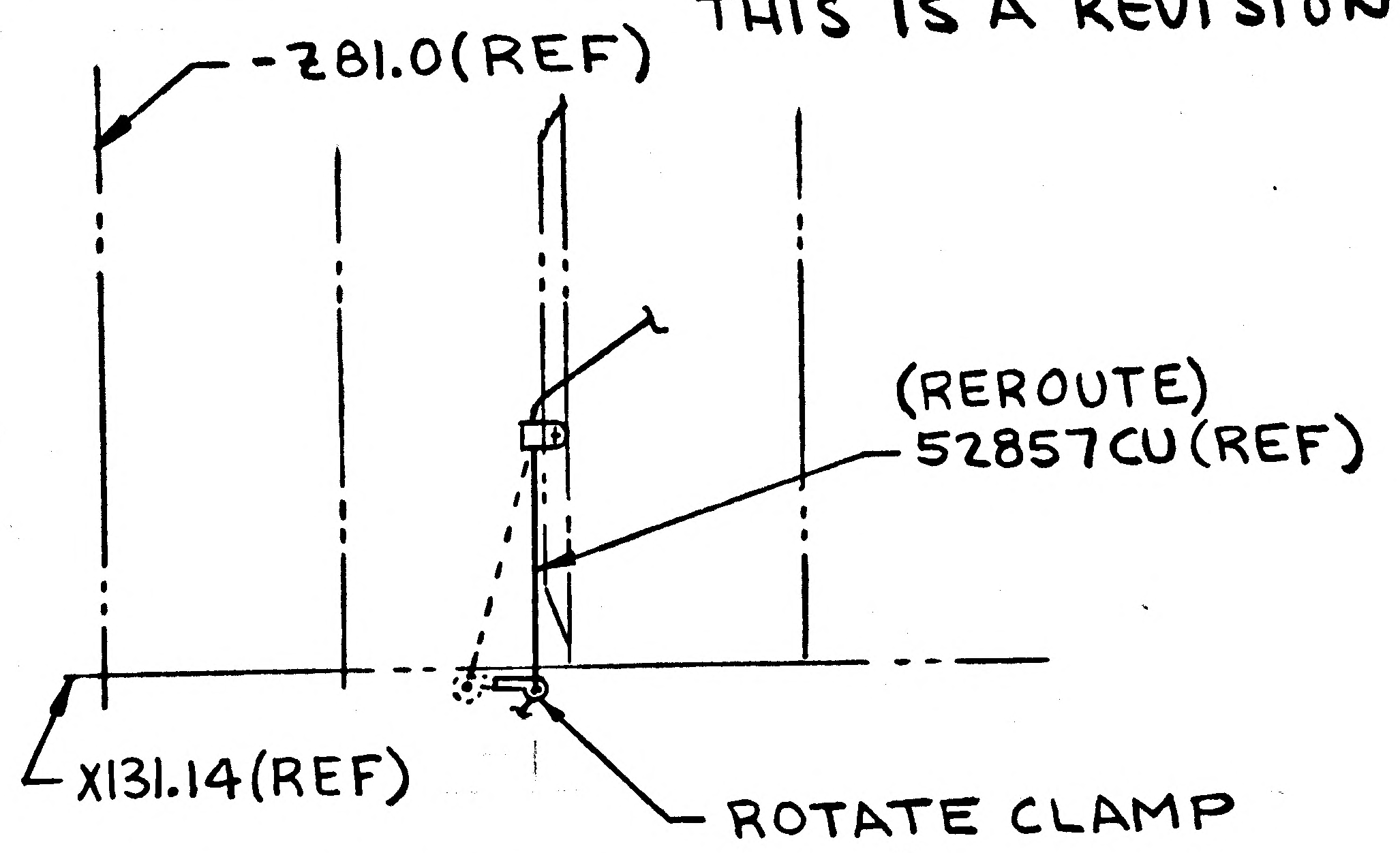
-Z81.0 (REF)
(REROUTE)
52857CU (REF)
X131.14 (REF)
ROTATE CLAMP

VIEW D-D (SH 6, ZONE 31A)

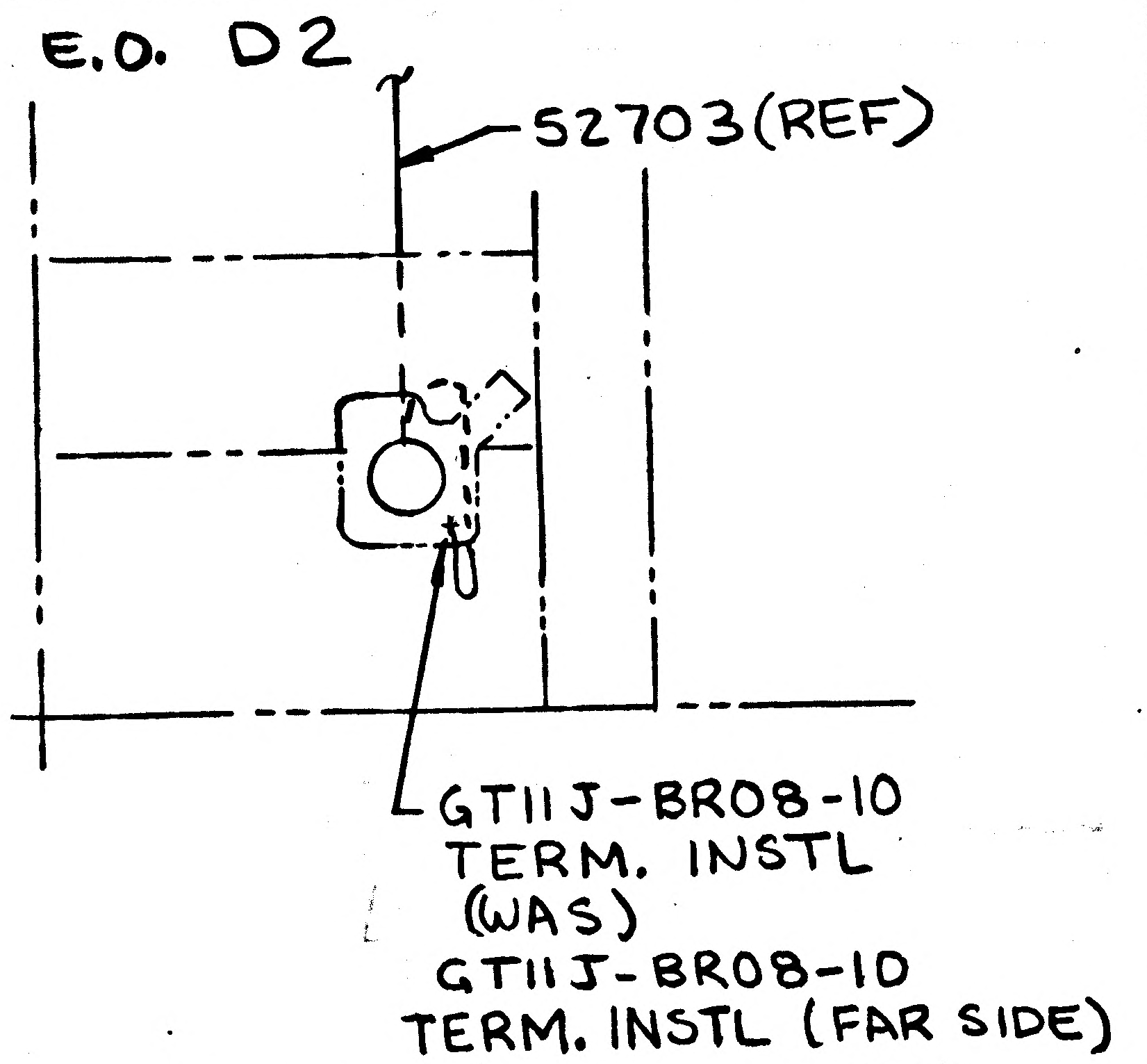
52703 (REF)
GT11J-BR08-10
TERM. INSTL
(WAS)
GT11J-BR08-10
TERM. INSTL (FAR SIDE)

VIEW S-S (SH7, ZONE 50B)

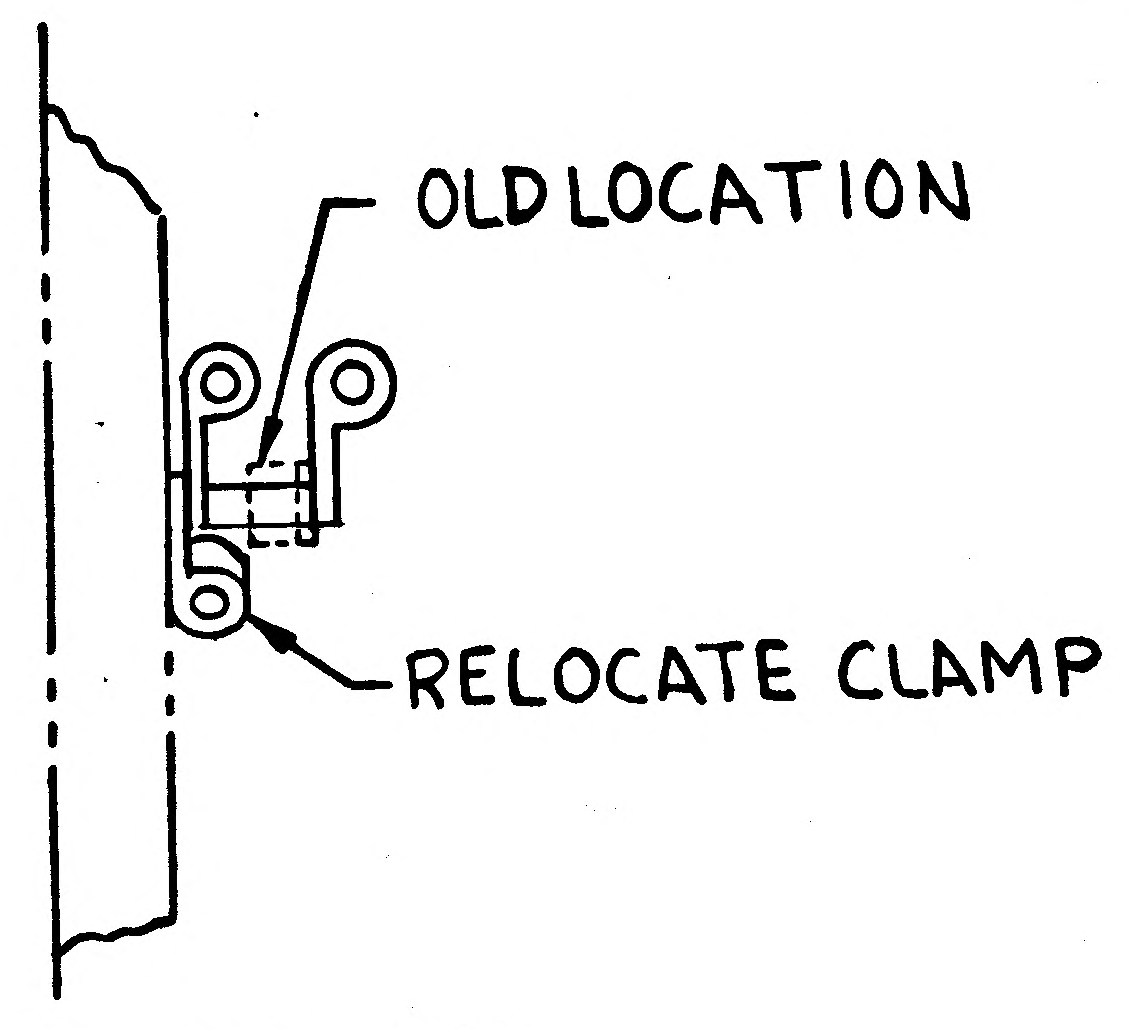
OLD LOCATION
RELOCATE CLAMP

SECT BP-BP
(SH7, ZONE 44B)

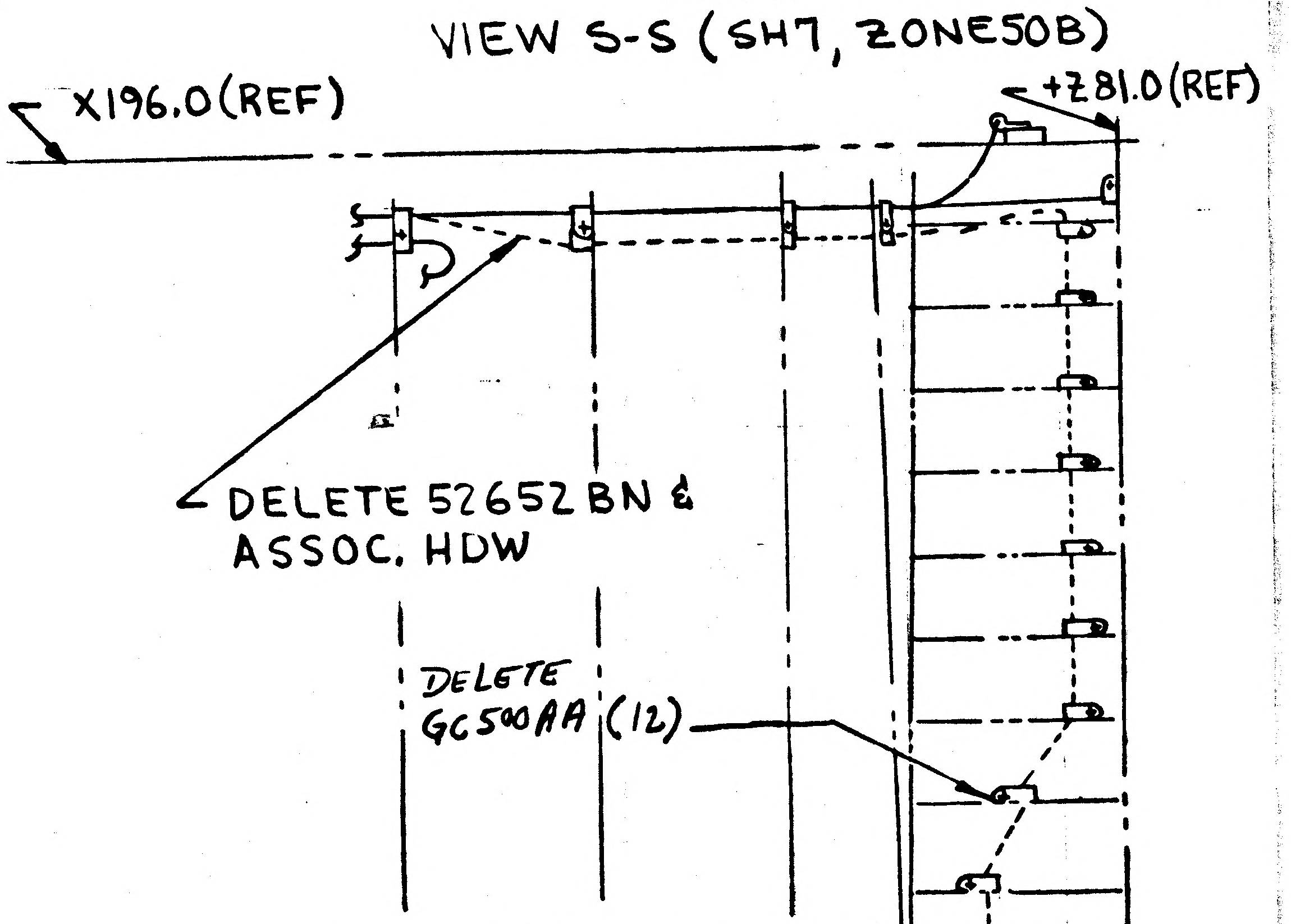
X196.0 (REF)
+Z81.0 (REF)
DELETE 52652BN & ASSOC. HDW
DELETE GC500AA (12)

VIEW R-R (SH7, ZONE 47B)

*INSTALL GC500AA CLAMP PER LPC280-23

DETAIL SPEC REQ	☐	CL II ENGRG CHG	☑	CL I ENGRG CHG	☐	LCD1078

REASON FOR EO	DESCRIPTION OF EO	GAEC EO RELEASE
PREVENT CHAFING & REMOVAL OF EXCESS WIRE	ON-1 ADDED GC500AA (1), REROUTED 21743AB, 52857CU (REF) DELETED 52652BN & GC500AA (12)	JK 11/21/67

MODEL	PROCURING ACTIVITY NO.	GAEC UNIT NO.	SUB CONTR UNIT NO.
LM		LM-2 (32)	

DRAWING CHANGE REQD		DISPOSITION OF PARTS										
REVISE DWG	RECORD EO	REWORK	SCRAP	APPROVED BY	JRS						JAP	Betti
✓		✓		DATE	11/16/67			11/16/67	11/18/67		11/20/67	11-21-67
				S	VDI	SUPPORT	RELIAB. GROUP	GROUP LEADER	STRESS GROUP	LIAISON ENGRG	PROJ ENGRG	

PRIORITY	DRAWING TITLE	DRAWING NO.	EO NO.
C	LINES INSTL ELECTRONIC DESCENT STAGE	LDW280-52607	E2

11/29
ISSUED BY R. EBERLE X1153 SECTION VDI (EQUIP LINES) GROUP NO. 332 PL 25
#W.P. 45

GRUMMAN AIRCRAFT ENGINEERING CORP.
CODE IDENT NO. 26512
ENGINEERING ORDER

ENG 32.1 REV 3-65

DWG. NO. LDW280-52607		EO NO. E3	
CONTROL INFO NO. LM5-13669			

ON-1 REF EO D3

REMOVE $\frac{7}{8}$ DIM (2) PLACES & DRILL # 28 (.139-.145)

RELEASED BY LIAISON

EXISTING HOLE LEFT OPEN.

DETAIL SPEC REQ	☐	CL II ENGRG CHG	☑	CL I ENGRG CHG	☐

REASON FOR EO: DIM & DRILL NOT REQ'D. ON INSTL., IS CALLED OUT ON DETAIL.

DESCRIPTION OF EO: ON-1 REMOVED DR # 28 (.139-145) & $\frac{7}{8}$ DIM 2PLACES

GAEC EO RELEASE: C

MODEL	EFFECTIVITY: PROCURING ACTIVITY NO.	GAEC UNIT NO.	SUB CONTR UNIT NO.
LM		LM 2 (3?)	

DRAWING CHANGE REQD: REVISE DWG	RECORD EO	DISPOSITION OF PARTS: REWORK	SCRAP
✓		✓	

	VDI	VDI	SUPPORT	RELIAB. GROUP	GROUP LEADER	STRESS GROUP	LIAISON ENGRG	PROJ ENGRG	~~GOVT~~
APPROVED BY	Jap				—	JFJ	CH	Jap	
DATE	11/27/67				—	11-21-67	11-21-67	11/21/67	11-22-67

PRIORITY	DRAWING TITLE	DRAWING NO.	EO NO.
C	LINES INSTAL. ELECTRONIC DESCENT STAGE	LDW280-52607	E3

ISSUED BY ROSADO 8645N SECTION EQUIP LINES GROUP NO. 332 PL 5

01

NAS 9-1100

B

ENG 32.1 REV 3-65

GRUMMAN AIRCRAFT ENGINEERING CORP.
CODE IDENT NO. 26512
ENGINEERING ORDER

DWG. NO. LDW280-52607
EO NO. E4
CONTROL INFO NO. LDW280B0500

ON-1 INSTL:

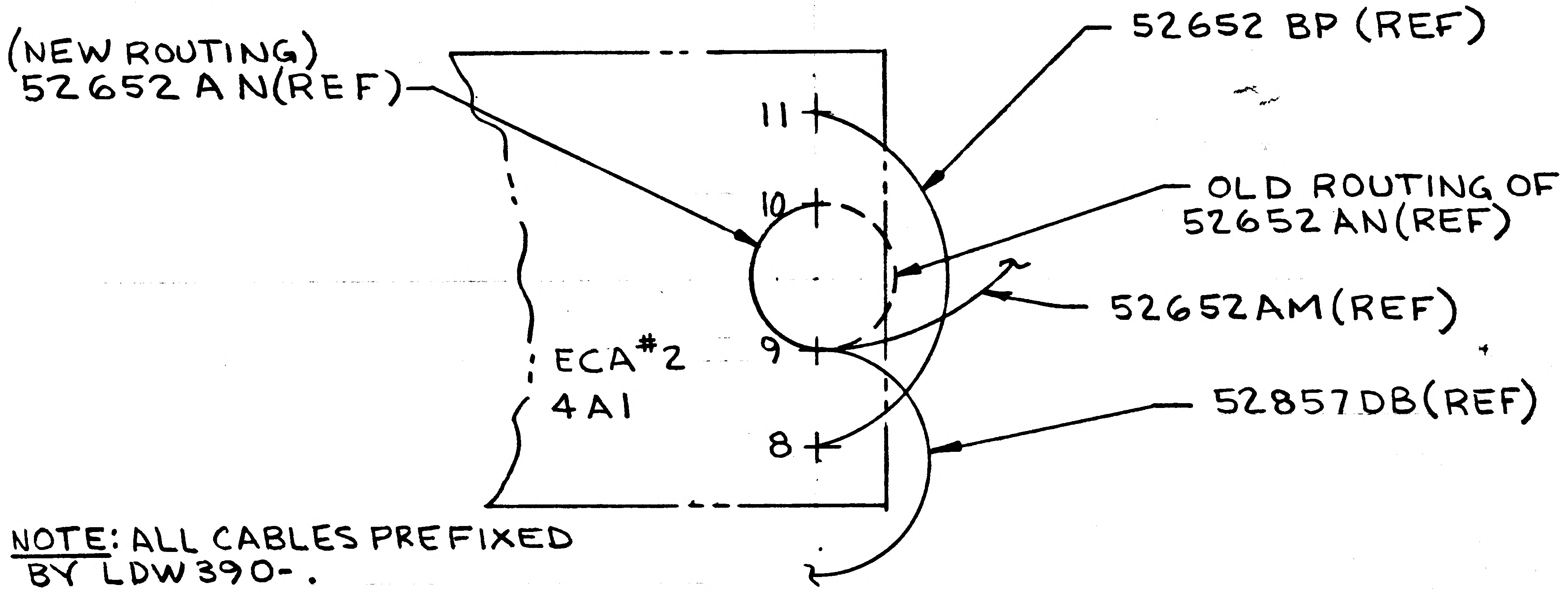
(NEW ROUTING)
52652 AN (REF)
52652 BP (REF)
11
10
OLD ROUTING OF 52652 AN (REF)
52652 AM (REF)
9
ECA #2
4A1
52857 DB (REF)
8

NOTE: ALL CABLES PREFIXED BY LDW390-.

PART OF VIEW S-S (SH 7, ZONE 50B)

DETAIL SPEC REQ		CL II ENGRG CHG	✓	CL I ENGRG CHG	LCD 1078

REASON FOR EO: TO PERMIT INSTL OF TERM. LUGS

DESCRIPTION OF EO: ON-1 REROUTED CABLE 52652 AN (REF)

GAEC EO RELEASE

MODEL	PROCURING ACTIVITY NO.	GAEC UNIT NO.	SUB CONTR UNIT NO.
LM		LM-2 (32)	

DRAWING CHANGE REQD		DISPOSITION OF PARTS	
REVISE DWG	RECORD EO	REWORK	SCRAP
✓		✓	

APPROVED BY	JRS			JW	WJH		JP	JRF
DATE	11/20/67			11/20/67	11/21/67		11/21/67	11/30/67
E	VDI	SUPPORT	RELIAB. GROUP	GROUP LEADER	STRESS GROUP	LIAISON ENGRG	PROJ ENGRG	~~GOVT~~

PRIORITY	DRAWING TITLE	DRAWING NO.	EO NO.
C	LINES INSTALLATION ELECTRONIC DESCENT STAGE	LDW280-52607	E4

12/04
ISSUED BY R. EBERLE-X1153-(11-20-67)
SECTION VDI (EQUIP LINES
GROUP NO. 332
PL 25

01

NAS 9-1100

B

ENG 32.1 REV 3-65

GRUMMAN AIRCRAFT ENGINEERING CORP.
CODE IDENT NO. 26512

ENGINEERING ORDER

DWG. NO. LDW-280-52607
EO NO. E5
CONTROL INFO NO. LM5- 14988

ON -1 ASSY SHT. 7 ZONE A-40
CHANGE SECT "BM - BM" AS SHOWN.

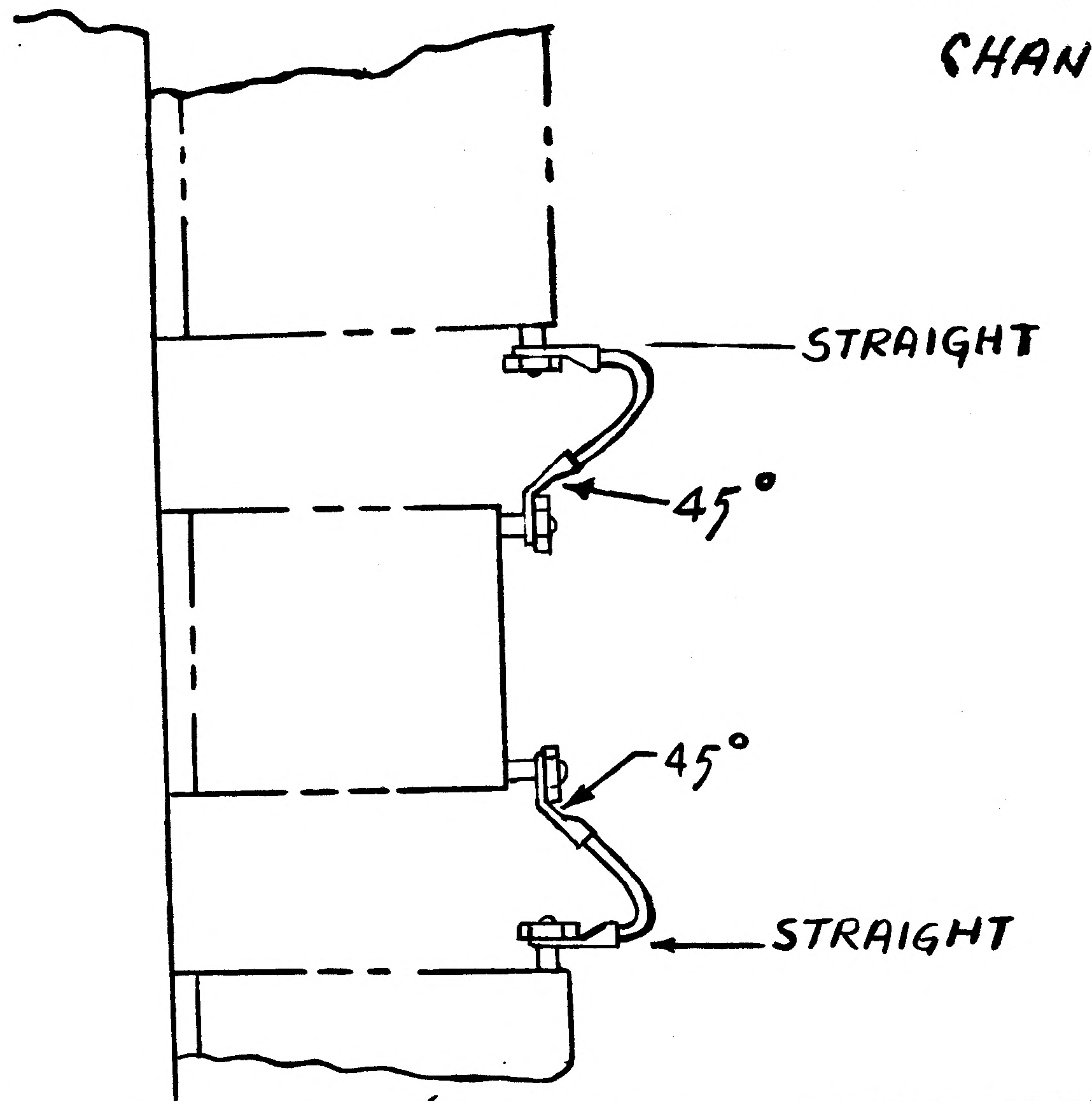

RELEASED BY LIAISON

DETAIL SPEC REQ		CL II ENGRG CHG	✓	CL I ENGRG CHG	

REASON FOR EO: INCORRECT ROUTING of CABLES

DESCRIPTION OF EO: ON -1 ASSEMBLY IN F/D SHOWED CORRECT ROUTING of CABLE

GAEC EO RELEASE: (5) C JK

MODEL	EFFECTIVITY		
	PROCURING ACTIVITY NO.	GAEC UNIT NO.	SUB CONTR UNIT NO.
LM		LM-2 (32)	

DRAWING CHANGE REQD		DISPOSITION OF PARTS	
REVISE DWG	RECORD EO	REWORK	SCRAP
✓		✓	

APPROVED BY	JAP			—	JFJ	CR	JAP	
DATE	1/10/68			—	1-5-67	1-5-67	1/10/68	1/6/68
	VDI	SUPPORT	RELIAB. GROUP	GROUP LEADER	STRESS GROUP	LIAISON ENGRG	PROJ ENGRG	

PRIORITY: C

DRAWING TITLE: LINES INSTALLATION ELECTRONIC DECENT STAGE

DRAWING NO.: LDW 280-52607

EO NO.: E5

ISSUED BY LIAISON I. DAVIS H. BABCOCK X86755 SECTION VDI GROUP NO. 280 PL 5

Q 1
NAS 9-1100

01

NAS 9-1100

B

ENG 32.2 REV 3-65

GRUMMAN AIRCRAFT ENGINEERING CORP.
CODE IDENT NO. 26512
ENGINEERING ORDER

DWG. NO. LDW280-52607	EO NO. F1
CONTROL INFO NO. LM5-13767	

IN F/D & B/M ON-1 INSTL ADD:

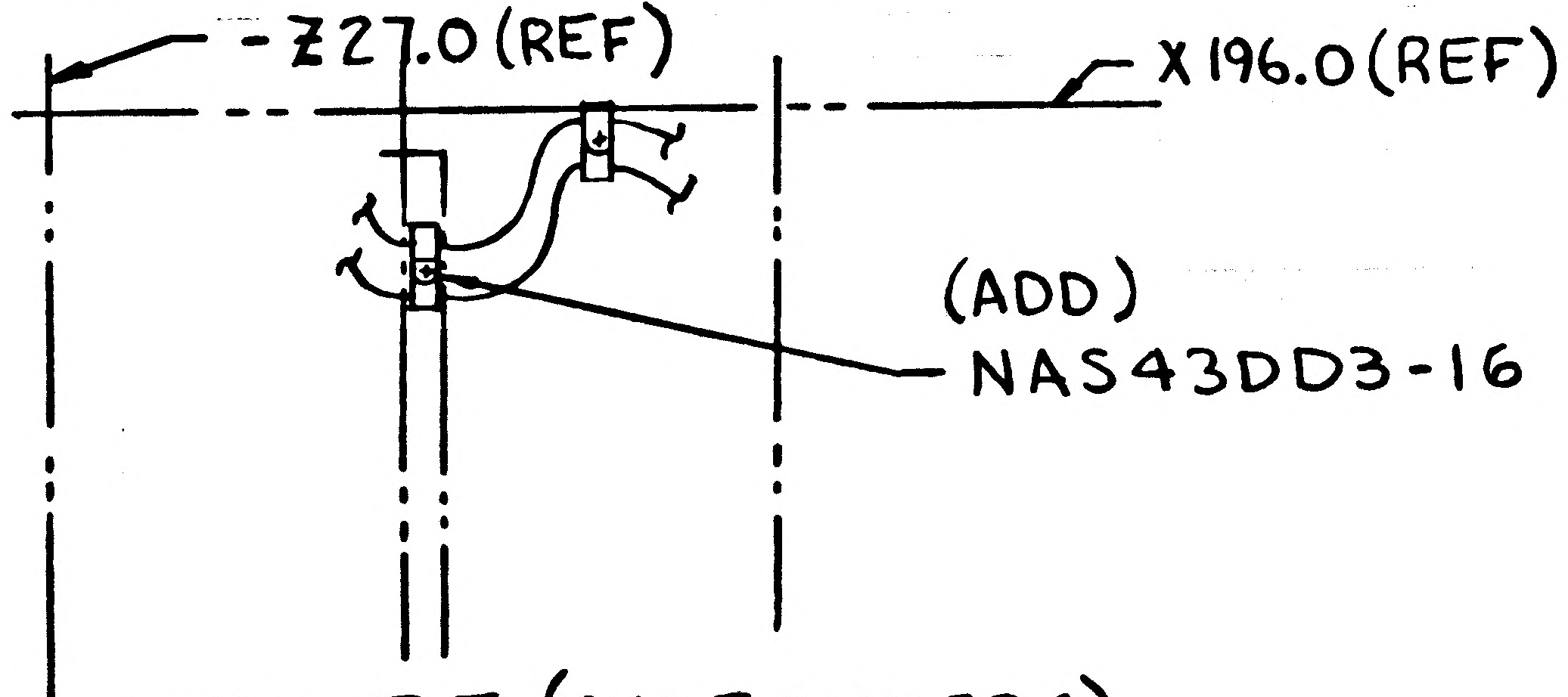

-Z27.0 (REF)
X196.0 (REF)
(ADD)
NAS43DD3-16

VIEW E-E (SH6, ZONE 33C)

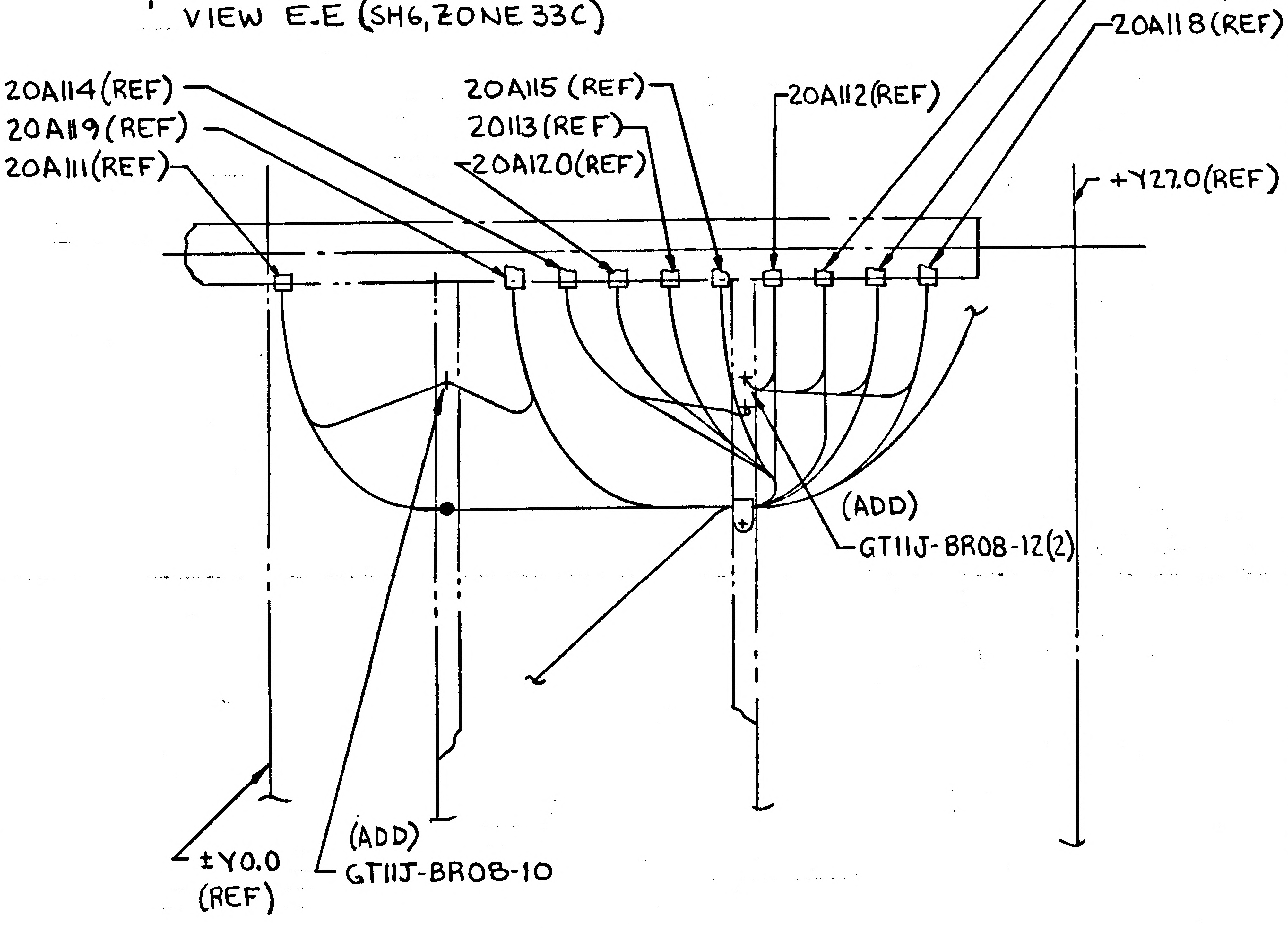

20A116 (REF)
20A117 (REF)
20A118 (REF)
20A114 (REF)
20A119 (REF)
20A111 (REF)
20A115 (REF)
20113 (REF)
20A120 (REF)
20A112 (REF)
+Y27.0 (REF)
(ADD)
GT11J-BR08-12(2)
±Y0.0
(REF)
(ADD)
GT11J-BR08-10

VIEW G-G
(SH 7, ZONE 42B)

RELEASED BY LIAISON

DETAIL SPEC REQ		CL II ENGRG CHG	✓	CL I ENGRG CHG	

REASON FOR EO: PROVIDE GROUNDS FOR INSTRUMENTATION	DESCRIPTION OF EO: IN F/D & B/M ON -1 INSTL ADDED: NAS43DD3-16 (1) & GT11J-BR08-12 (2), GT11J-BR08-10 (1)

(5)

GAECC EO RELEASE: VC

MODEL	PROCURING ACTIVITY NO.	GAEC UNIT NO.	SUB CONTR UNIT NO.	DRAWING CHANGE REQD: REVISE DWG	RECORD EO	DISPOSITION OF PARTS: REWORK	SCRAP
LM		LM-2 (32)		✓		✓	

APPROVED BY				—		CR		
DATE	1/17/68			—	12-68	1968	1/68	1/13/68
—	VDI	SUPPORT	RELIAB. GROUP	GROUP LEADER	STRESS GROUP	LIAISON ENGRG	PROJ ENGRG	~~GOVT~~

PRIORITY	DRAWING TITLE	DRAWING NO.	EO NO.
C	LINES INSTALLATION ELECTRONIC DESCENT STAGE	LDW280-52607	F1

ISSUED BY R. EBERLE X1153 SECTION VDI (EQUIP LINES) GROUP NO. 332 PL 25

RELEASED BY LIAISO

ENG 32.1 REV 3-65

GRUMMAN AIRCRAFT ENGINEERING CORP.
CODE IDENT NO. 26512
ENGINEERING ORDER

DWG. NO. LDW280-52607		EO NO. F2	
CONTROL INFO NO. LM-5-13802			

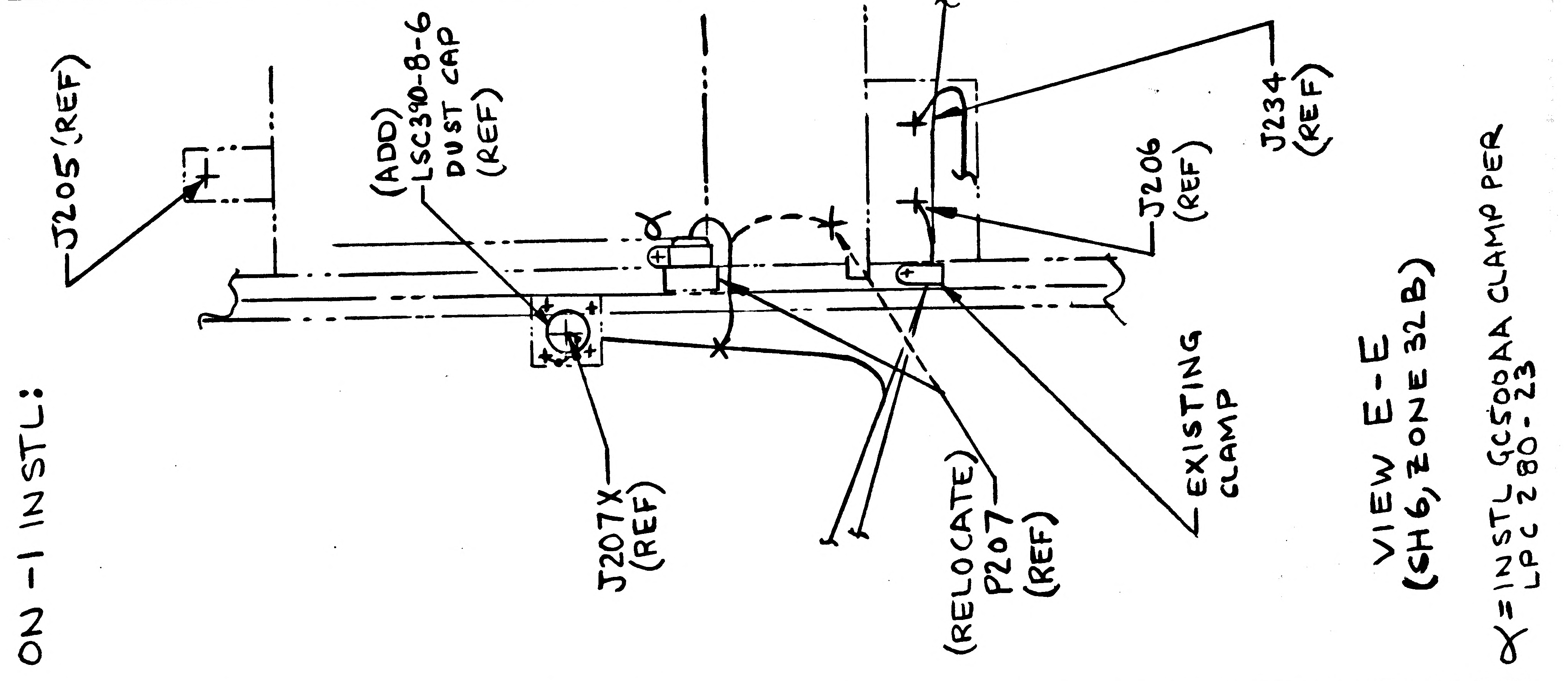
ON-1 INSTL:
J205 (REF)
(ADD) LSC390-8-6 DUST CAP (REF)
J207X (REF)
(RELOCATE) P207 (REF)
J206 (REF)
J234 (REF)
EXISTING CLAMP
VIEW E-E (SH6, ZONE 32B)
γ = INSTL GC500AA CLAMP PER LPC 280-23
γ

DETAIL SPEC REQ	☐	CL II ENGRG CHG	☒	CL I ENGRG CHG	☐

REASON FOR EO: PROVIDE SUPT FOR IDLE CONNECTOR

DESCRIPTION OF EO: ON-1 INSTL: RELOCATED P207(REF); ADDED: GC500AA(1) LSC390-8-6 DUST CAP (REF)

GAEC EO RELEASE ⑤

MODEL	EFFECTIVITY		
	PROCURING ACTIVITY NO.	GAEC UNIT NO.	SUB CONTR UNIT NO.
LM		LM-2 (32)	

DRAWING CHANGE REQD		DISPOSITION OF PARTS	
✓ REVISE DWG	RECORD EO	✓ REWORK	SCRAP

APPROVED BY								
DATE	2/10/68			2-13	2/3/68	2-2-68	2/10/68	2/2/68
	VDI	SUPPORT	RELIAB. GROUP	GROUP LEADER	STRESS GROUP	LIAISON ENGRG	PROJ ENGRG	

PRIORITY: C

DRAWING TITLE: LINES INSTALLATION ELECTRONIC DESCENT STAGE

DRAWING NO.: LDW280-52607

EO NO.: F2

ISSUED BY R. EBERLE X1153 SECTION VDI (EQUIP LINES) GROUP NO. 332 PL 5

01
NAS 9-1100

GRUMMAN AIRCRAFT ENGINEERING CORP.
CODE IDENT NO. 26512
ENGINEERING ORDER

DWG. NO. LDW280-52607 | EO NO. F3
CONTROL INFO NO. LM-5-13807

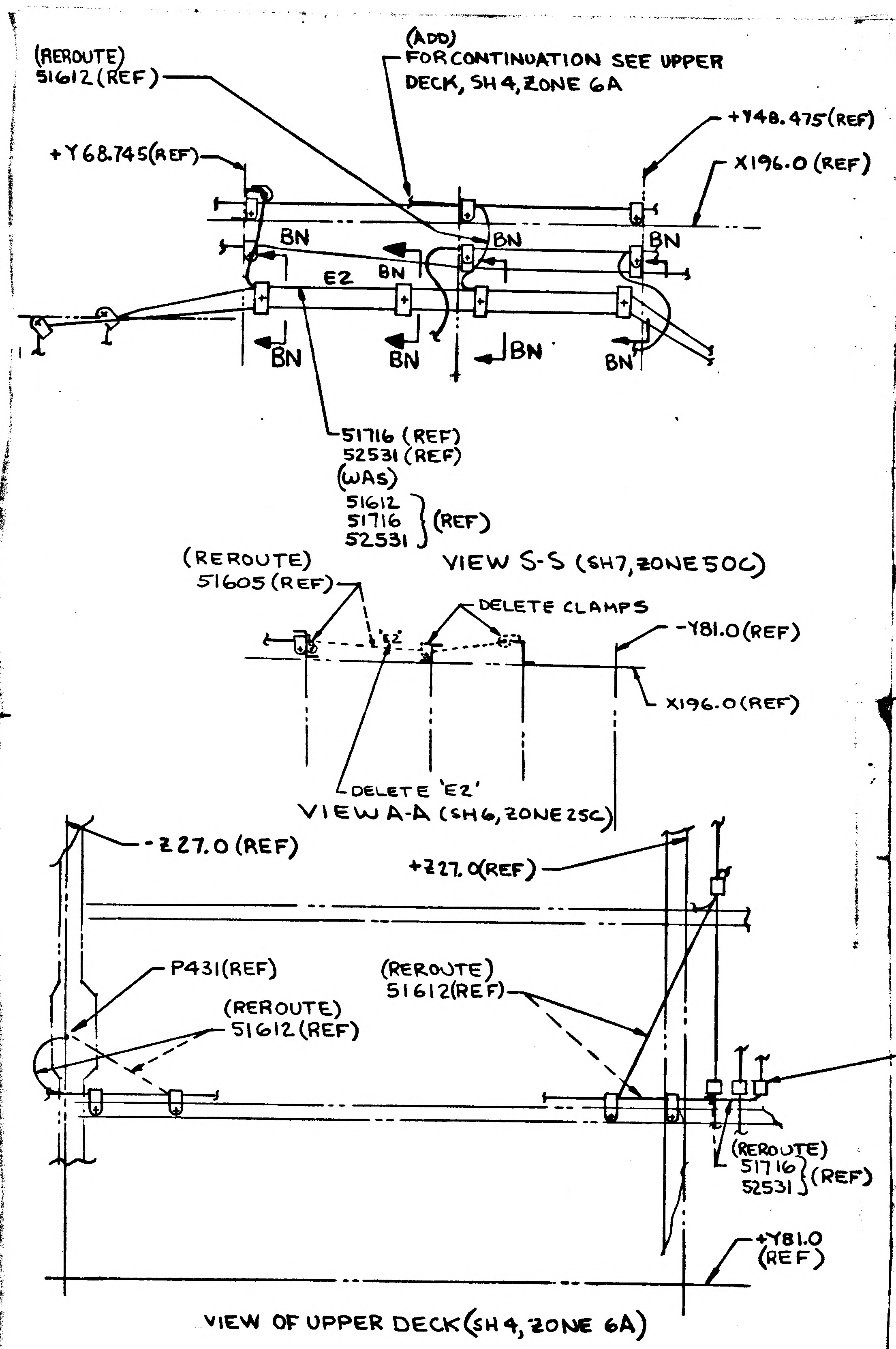
(REROUTE)
51612 (REF)
(ADD)
FOR CONTINUATION SEE UPPER DECK, SH 4, ZONE 6A
+Y48.475 (REF)
+Y68.745 (REF)
X196.0 (REF)
BN
E2
51716 (REF)
52531 (REF)
(WAS)
51612
51716
52531
(REF)
VIEW S-S (SH 7, ZONE 50C)
(REROUTE)
51605 (REF)
DELETE CLAMPS
-Y81.0 (REF)
X196.0 (REF)
DELETE 'E2'
VIEW A-A (SH 6, ZONE 25C)
-Z27.0 (REF)
+Z27.0 (REF)
P431 (REF)
(REROUTE)
51612 (REF)
(REROUTE)
51612 (REF)
ADD PICTURE OF CLAMP
(REROUTE)
51716
52531
(REF)
+Y81.0 (REF)
VIEW OF UPPER DECK (SH 4, ZONE 6A)

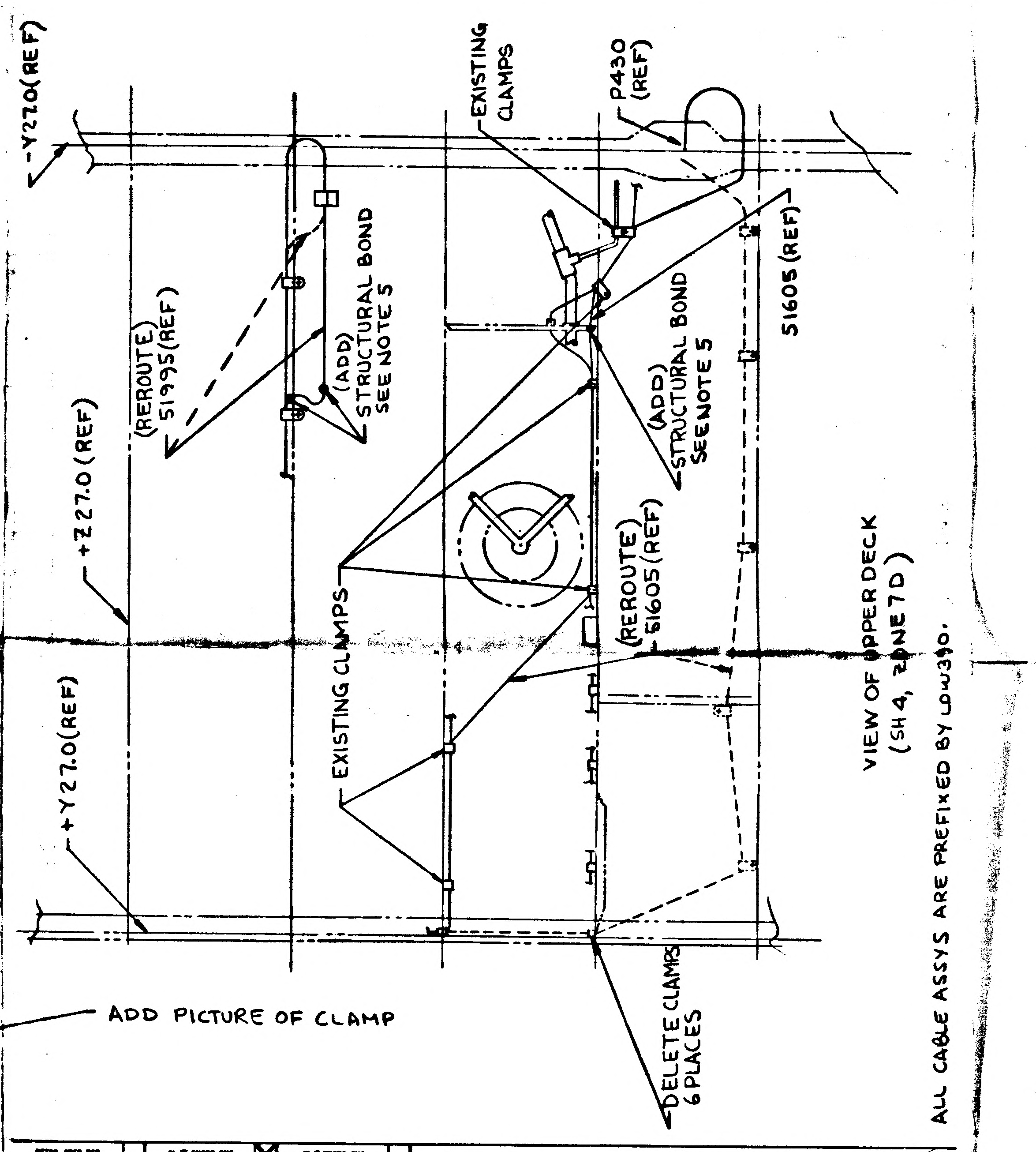
-Y27.0 (REF)
EXISTING CLAMPS
P430 (REF)
(REROUTE)
51995 (REF)
(ADD)
STRUCTURAL BOND
SEE NOTE 5
(ADD)
STRUCTURAL BOND
SEE NOTE 5
51605 (REF)
+Z27.0 (REF)
(REROUTE)
51605 (REF)
EXISTING CLAMPS
+Y27.0 (REF)
DELETE CLAMPS
6 PLACES
VIEW OF UPPER DECK
(SH 4, ZONE 7D)

ALL CABLE ASSYS ARE PREFIXED BY LDW390.

DETAIL SPEC REQ ☐ CL II ENGRG CHG ☒ CL I ENGRG CHG ☐

REASON FOR EO: TO INCREASE LENGTH OF CABLE

DESCRIPTION OF EO: ON-1 INSTL
REROUTED 51605 (REF), 51995 (REF), 51612 (REF) ADDED STRUCTURAL BOND SEE NOTE 5 (3 PLACES) DELETED CLAMPS 6 PLACES

GAEC EO RELEASE C (5)

MODEL	PROCURING ACTIVITY NO.	GAEC UNIT NO.	SUB CONTR UNIT NO.
LM		LM-2 (32)	

DRAWING CHANGE REQD: REVISE DWG ✓ RECORD EO
DISPOSITION OF PARTS: REWORK ✓ SCRAP

APPROVED BY								
DATE	2-12-68	2/9/68			2-12-68	2-14-68	2-12-68	2-14-68
		SUPPORT VDI	RELIAB. GROUP	GROUP LEADER	STRESS GROUP	LIAISON ENGRG	PROJ ENGRG	

PRIORITY: C
DRAWING TITLE: LINES INSTALLATION ELECTRONIC DESCENT STAGE
DRAWING NO. LDW280-52607
EO NO. F3

ISSUED BY REBERLE X1153 ROSADO 86454 SECTION VDI (EQUIP LINES) GROUP NO. 332 PL 5

01
NAS 9-1100

ENG 32.2 REV 3-65 RELEASED BY LIAISON

GRUMMAN AIRCRAFT ENGINEERING CORP.
CODE IDENT NO. 26512
ENGINEERING ORDER

DWG. NO. LDW280 52607		EO NO. F5
CONTROL INFO NO. LM-5-13817		

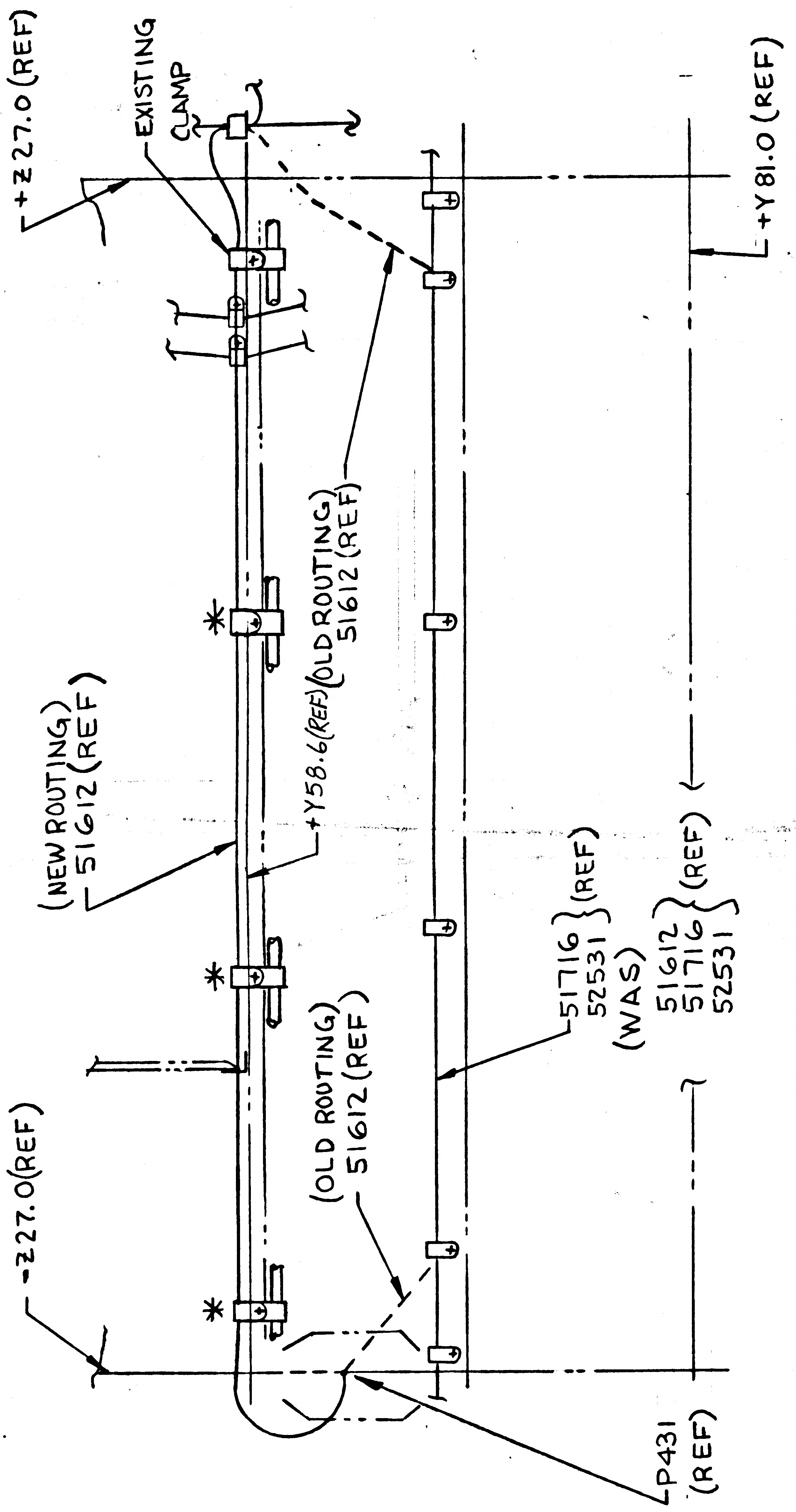
+Z27.0 (REF)
EXISTING CLAMP
+Y81.0 (REF)
(NEW ROUTING) 51612 (REF)
+Y58.6 (REF)
(OLD ROUTING) 51612 (REF)
*
*
*
(OLD ROUTING) 51612 (REF)
51716 52531 } (REF) (WAS)
51612 51716 52531 } (REF)
-Z27.0 (REF)
P431 (REF)

ON LDW280-52607-1 INSTL
VIEW OF UPPER DECK
(SH4, ZONE 6A

* INSTALL GC500AA CLAMPS PER LPC280-23.

DETAIL SPEC REQ	☐	CL II ENGRG CHG	☒	CL I ENGRG CHG	☐	(5)

REASON FOR EO	DESCRIPTION OF EO	GAEC EO RELEASE
REROUTED WIRES TO GAIN LENGTH	ON-1 INSTL; REROUTED 51612 (REF) & ADDED GC500AA CLAMPS (3)	J/C

MODEL	EFFECTIVITY: PROCURING ACTIVITY NO.	GAEC UNIT NO.	SUB CONTR UNIT NO.
LM		LM-2 (32)	

DRAWING CHANGE REQD		DISPOSITION OF PARTS	
REVISE DWG	RECORD EO	REWORK	SCRAP
✓		✓	

APPROVED BY								
DATE	2-12-68	2/13/68		2/16	2-13-68	2-13-68	2-12-68	2/13/68
	5/C&T	SUPPORT	RELIAB. GROUP	GROUP LEADER	STRESS GROUP	LIAISON ENGRG	PROJ ENGRG	

PRIORITY	DRAWING TITLE	DRAWING NO.	EO NO.
C	LINES INSTALLATION ELECTRONIC DESCENT STAGE	LDW280-52607	F5

ISSUED BY R. EBERLE X1153

SECTION VDI (EQUIP LINES) GROUP NO. 332 PL 5

01

NAS 9-1100

REVISIONS FOR CONTINUATION OF REVISIONS SEE SHEET ______

CHANGE LTR	ITEM NO.	SHEET NO.	ZONE	GRUMMAN INFO ONLY	DET SPEC	CLASS I	CLASS II	ENGRG ORDER	DESCRIPTION	EFFECTIVITY	DISPOSITION OF EXISTING PARTS		CHANGED BY AND DATE	ENGRG APPD	GOVT APPD
											REWORK	SCRAP			
	1	2.00,5.00, 6.00	13B 24B				✓	E.O. A1	FOR-3 ASSY IN FLD & B/M REMOVED LDW280-17388-470DSH-6 ADDED LDW280-17388-485DSH-6. ADDED SH 1.10	LM-2(32)	✓		L. BITTNER 2-15-67		
	2	2.02,2.05, 4.00	5A 6B 8A				✓	E.O. A2	ON-3 ASSY IN FLD & B/M REMOVED LDW280-17388-363V-12 TUBE, (2) LDW280P16218-1 ADDED (1) LDW280-17388-1503 ASSY, (1) LDW280P16218-11, (1) LDW280P16218-13						
	3	2.05,3.00 6.00	24C 25B					E.O. A3	ON-1 IN FLD & B/M REMOVED LDW270M10003-1(2) ADDED LDW270M10014-11 & -57 NOTE 11e WAS INSTALL NEW ORIFICES LDW270M10003 (FUEL SIDE) & LDW270M10014 (OXIDIZER SIDE)						
	4	2.00,2.02, 2.04,5.00	A13 A16 B16				✓	E.O. A4	ON-3 IN FLD & B/M DELETED (1) LDW280-17388-267DSH-8 TUBE, ADDED (1) LDW280-17388-611DSH-8 TUBE, (1) LDW280-17388-613DSH-8 TUBE, (2) LSC269-218-8 UNION REVISED DETAILS ON SH 5 TO AGREE						
	5	2.05,3.00 3.01,6.00	B26 C24					E.O. A5	REF E.O. A3 ON-1 IN FLD & B/M REMOVED LDW270M10003-1(2) ADDED GP10N-27 & -50, IN NOTE 11d GP10N-140 WAS LDW270M10003-1, IN NOTE 11e GP10N-27 WAS LDW270M10003, GP10N-50 WAS LDW270M10014 & ADDED NOTE 15						
	6	2.04, 5.00	11C 12A					E.O. A6	IN FLD & B/M REMOVED VENDOR SUPPLIED SHIPPING PLUG & SEAL FROM INSTRUMENTATION PRESSURE PORT IN +Y & +Z TANK LOWER COVER & REPLACED WITH LSC269-160-4(2), LSC269-112-4(2) & LSC269-113-4(2)						
	7	2.05, 2.06, 6.00	23B 23C 25B 27A 27B				✓	E.O. A7	RELOCATED LINES, ADDED CLAMPS & REMOVED CLAMPS TO PROVIDE CLAMPING IN VIEW OF-Z27 WALL & B/M FOR-1 ADDED (2) NAS43DD3-8 SPACERS. IN VIEW OF-Y27 WALL & B/M FOR-1 ADDED (1) NAS43DD3-16 SPACER -465DSH-8 REF WAS-264 FOR-1 IN FLD & B/M ADDED (6) AN960D716 WASHERS, (4) AN960D916 WASHERS, REMOVED (3) AN960D716L WASHERS, (4) AN960D916L WASHERS						
	8	3.01					✓	E.O. A8	ADDED NOTE 16						
	9	2.04,3.01,6	23B,[illegible]					E.O. A9	ON-1 ADDED LSC269-229-4(4) CAPS & INSTL NOTE 17 ADDED ½ DIM (2 PLACES)						
	10	2.06,4.00	6B,8A					E.O. A10	ON-1 REMOVED GC12A-24(2) & ADDED MS20470AD3(12) TO FLD & B/M				JG		

CHG APPROVED

LTR	GROUP LDR	VEH DES INT	STRUCTURES	STRUCTURES	WEIGHTS
A					

GRUMMAN AIRCRAFT ENGRG CORP., BETHPAGE, L. I., NEW YORK

SIZE	CODE IDENT NO.		
B	26512	LDW280-52608	A
SCALE NONE			SHEET 1.10

ENG 77.16 3-66

01

NAS 9-1100

REVISIONS FOR CONTINUATION OF REVISIONS SEE SHEET 1.12

CHANGE LTR	ITEM NO.	SHEET NO.	ZONE	GRUMMAN INFO ONLY	DET SPEC	CLASS I	CLASS II	ENGRG ORDER	DESCRIPTION	EFFECTIVITY	DISPOSITION OF EXISTING PARTS		CHANGED BY AND DATE	ENGRG APPD	GOVT APPD
											REWORK	SCRAP			
B	1	2.06 4.00	6B 8A				✓	EO B1	(ON-1) MS20470A3 (12) WAS MS20470AD3 (12)	LM-2(32)	✓		H.J. RYAN 10-16-67		
	2	3.00					✓	EO B2 LCD 1078 LEO280-563	REVISED NOTE 4 (45-48 IN LBS) WAS (32-35 IN LBS)		NOT	REQD			
	3	2.05					✓	EO B3	ADDED LDW280-17848-11 TO -3 ASSY						
	4						✓	EO B4 LCD 1078 LEO280-581	CANCELED BY EO C9						
	5	2.01 4.00	4C				✓	EO B5 LCD 1078	(ON-3) REMOVED: LDW280-17388-340DSH-4 ADDED: LDW280-17388-638DSH-4			✓			
	6	2.00, 2.02 2.03, 2.04 4.00	5C 7C				✓	EO B6 LCD1514	(ON-3) DELETED LSC269-234-15, -234-24, LDW280-17388-165DSH-10, -460DSH-4, -453DSH-12. ADDED REF CALLOUT LDW270-51309 & LSC 269-200-4 & -640 DSH-4		✓				
	7	2.06 5.00	11B 12A 12B 14B				✓	EO B7 LCD 1894	(ON-1) ADDED GB511T-3H3 (64) & REMOVED NAS673V3H (64)						
	8						✓	EOB8 LCD 1894 LEO280-660	CANCELED BY EO C9						
	9	2.00, 2.03 2.04, 2.05 2.06, 2.07 5.00, 6.00	12B 13B 23B 25B 26B				✓	EO B9 LCD 1843	(ON-1) ADDED: -650DSO-4 THRU -652 DSO-4, 653DSF-4 THRU -655DSF-4, LSC269-224-4 (5), LSC269-227-4 (2), GB511J-08-2 (16), AN960D8L (16), LDW280-52983-1 & -3. REMOVED -155DSF-4 (1), -138DSO-4 (1), -447DSO-4 & -481DSF-4.						
	10	2.04, 2.06 2.07 5.00 6.00	12B 23B 26A				✓	EO B10 LCD 1843 Ⓡ	(ON-1) ADDED: -657DSO-4, LSC269-224-4 & LSC269-226-4 DELETED: LSC 269-227-4, GB511J-08-2 (8), AN960D8L (8). ADDED SECT AF-AF						

CHG APPROVED

LTR	GROUP LDR	VDI	STRUCTURES	STRUCTURES
B	SEE SH 1.12	~	~	~

GRUMMAN AIRCRAFT ENGRG CORP., BETHPAGE, L. I., NEW YORK

SIZE	CODE IDENT NO.		
B	26512	LDW280-52608	C
SCALE NONE			SHEET 1.11

ENG 77.16 3-66

01

NAS 9-1100

REVISIONS

FOR CONTINUATION OF REVISIONS SEE SHEET ____

CHANGE LTR	ITEM NO.	SHEET NO.	ZONE	GRUMMAN INFO ONLY	DET SPEC	CLASS I	CLASS II	ENGRG ORDER	DESCRIPTION	EFFECTIVITY	DISPOSITION OF EXISTING PARTS REWORK	DISPOSITION OF EXISTING PARTS SCRAP	CHANGED BY AND DATE	ENGRG APPD	~~[illegible]~~ APPD
C	1						✓	LEO280-669	CANCELED BY EO C9	LM-2 (32)	NOT	REQD	H.J. RYAN 10-16-67		
	2					✓		LEO 280-677 LCD 1894	CANCELED BY EO C7						
	3					✓		EO C3 LCD 1935	CANCELED BY EO C10						
	4	3.00					✓	LEO280-679	REVISED NOTE 5 (LPC280-22) WAS (LPC280-23)						
	5					✓		EO C5 LCD 1935	CANCELED BY EO C10						
	6						✓	LEO280-683	CANCELED BY EO C9						
	7					✓		EO C7 LEO280-688 LCD 1894	CANCELED EO C2						
	8					✓		EO C8 LCD 1894 LCD 1892	CANCELED BY EO C9						
	9					✓		EO C9 LCD 1894	CANCELED EO B4, EO B8, EO C1, EO C6 & EO C8						
	10					✓		EO C10 LCD 1894	CANCELED EO C3 & EO C5						
	11			B		✓		LCD 1894	DELETED -1 CREATED -5 (-5 MAY BE MADE FROM -1)		✓				
	12	3.00, 3.01 3.02				✓		LCD 1894	ADDED NOTES 18 THRU 35 REMOVED NOTES 4, 8, 10, 11, 15, 28, 32		NOT	REQD			10-20-7
	13							BvC	SHEET 1 OF 19 WAS SHEET 1 OF 14. ADDED SHEETS 1.11, 1.12, 2.07, 3.02 & 7.00. LAST SECTION LETTER USED AM WAS T					10/17	

CHG APPROVED

LTR	GROUP LDR	VDI	STRUCTURES	STRUCTURES	MATERIALS
C	10/17/67	10/17	10/17	10/18	10/19

GRUMMAN AIRCRAFT ENGRG CORP., BETHPAGE, L. I., NEW YORK

SIZE	CODE IDENT NO.		
B	26512	LDW280-52608	C ⓒ
SCALE NONE		SHEET 1.12	

ENG 77.16 3-66

01

NAS 9-1100

CL	-15	-13	-9	-7	-5	-3	CODE IDENT	PART NO.	I&T	NOMENCLATURE OR DESCRIPTION	MATERIAL	GOVT SPEC	COML SPEC	STOCK SIZE	PROCESS SYM	FINISH NO.	ZONE
								LDW280-17388									
L						1		-452 DSH-12	E	TUBE	SEE DWG						
						1		-295 DSH-6									
						1		-275 DSH-4									
						1		-485 DSH-6									
						1		-471 DSH-6									
						1		-472 DSH-6									
						1		-468 DSH-8									
						1		-611 DSH-8									
						1		466 DSH-8									
						1		-265 DSH-8									
						1		-465 DSH-8									
						1		-263 DSH-8									
						1		-469 DSH-8									
						1		-467 DSH-8									
						1		-168 DSH-12									
L						1		-167 DSH-4									
J					1			-155 DSF-4									
					1			-149 DSD-4									
					1			-147 DSF-4									
					1			-146 DFF-4									
					1			-138 DSO-4									
J					1			-473 DOD-4		TUBE	SEE DWG						
								LDW280-17388									
J					1			LDW280-52608-15		LINE ASSY (WELDED)					W		26A
J					1			-13		LINE ASSY (WELDED)					W		23A
L						4		-11		TUBE	SEE NOTE 12						5B
J					1			-9		LINE ASSY (OXIDIZER)							11B
J					1			-7		LINE ASSY (FUEL)							13C
G								-5		LINES INSTL							11A
L								LDW280-52608-3	E	LINES INSTL							3A

QTY PER ASSEMBLY

CL = CLEANLINESS LEVEL / LSP-14-0011

SYM OR NO.	PROCESS OR FINISH	GRUMMAN SPEC OR MILITARY SPEC	SYM OR NO.	PROCESS OR FINISH	GRUMMAN SPEC OR MILITARY SPEC	SYM OR NO.	PROCESS OR FINISH	GRUMMAN SPEC OR MILITARY SPEC
						W	WELD (FUSION)	MIL-W-8611
						88	ANODIZE	LSP14-9030

I & T: IDENTIFICATION AND TRACEABILITY IN ACCORDANCE WITH : NONE

GRUMMAN AIRCRAFT ENGRG CORP, BETHPAGE, L. I., NEW YORK

SIZE	CODE IDENT NO.		
B	26512	LDW280-52608	C

SCALE NONE

SHEET 2.00

ENG 77.2 7-65

01

NAS 9-1100

								LDW280-17388									
L						1		-361DSH-10	E	TUBE	SEE DWG						
						1		-357DSH-4									
						1		-350DSH-10									
						1		-349DSH-4									
						1		-348DSH-10									
						1		-347DSH-4									
						1		-346 V-6									
						1		-345DSH-10									
						1		-341DSH-4									
						1		-638DSH-4									
						1		-336DSH-10									
						1		-335DSH-10									
						1		-334DSH-10									
						1		-333DSH-10									
						1		-332DSH-10									
						1		-331DSH-10									
						1		-330DSH-10									
						1		-329DSH-10									
						1		-328DSH-10									
						1		-327DSH-10									
						1		-326DSH-10									
						1		-325DSH-4									
						1		-324DSH-4									
						1		-323DSH-10									
						1		-322DSH-10									
						1		-321DSH-10									
						1		-320V-12									
						1		-319DSH-4									
L						1		-318DSH-4	E	TUBE	SEE DWG						
								LDW280-17388									
CL	-15	-13	-9	-7	-5	-3	CODE IDENT	PART NO.	I&T	NOMENCLATURE OR DESCRIPTION	MATERIAL	GOVT SPEC	COML SPEC	STOCK SIZE	PROCESS SYM	FINISH NO.	ZONE
QTY PER ASSEMBLY																	

SYM OR NO.	PROCESS OR FINISH	GRUMMAN SPEC OR MILITARY SPEC	SYM OR NO.	PROCESS OR FINISH	GRUMMAN SPEC OR MILITARY SPEC	SYM OR NO.	PROCESS OR FINISH	GRUMMAN SPEC OR MILITARY SPEC

I & T: IDENTIFICATION AND TRACEABILITY IN ACCORDANCE WITH : NONE

GRUMMAN AIRCRAFT ENGRG CORP, BETHPAGE, L. I., NEW YORK

SIZE	CODE IDENT NO.		
B	26512	LDW280-52608	C

SCALE NONE

SHEET 2.01

ENG 77.2 7-65

01

NAS 9-1100

CL	-15	-13	-9	-7	-5	-3	CODE IDENT	PART NO.	I&T	NOMENCLATURE OR DESCRIPTION	MATERIAL	GOVT SPEC	COML SPEC	STOCK SIZE	PROCESS SYM	FINISH NO.	ZONE
								LDW280-17388									
L						1		-311DSH-4	E	TUBE	SEE DWG						
						1		-312DSH-4									
						1		-395DSH-4									
L						1		-394DSH-8									
J					1			-475DSF-4									
L						1		-613DSH-8									
J					1			-391DSO-4									
					1			-388DFD-6									
					1			-387DFD-6									
					1			-386DFD-6									
					1			-385DFD-6									
					1			-384DFD-6									
					1			-383DFD-6									
					1			-382DFD-6									
J					1			-381DFD-6									
L						1		-375DSH-10									
L						1		-374DSH-10									
L						1		-373V-4									
J					1			-480DSC-4									
J					1			-478DSF-4									
J					1			-366DSF-4									
L						1		-364V-6		TUBE							
						1		-1503		ASSY							
						1		-362V-12		TUBE							
						1		-463DSH-4									
						1		-462DSH-4									
						1		-461DSH-4									
L						1		-640DSH-4	E	TUBE	SEE DWG						
								LDW280-17388									

QTY PER ASSEMBLY

SYM OR NO.	PROCESS OR FINISH	GRUMMAN SPEC OR MILITARY SPEC	SYM OR NO.	PROCESS OR FINISH	GRUMMAN SPEC OR MILITARY SPEC	SYM OR NO.	PROCESS OR FINISH	GRUMMAN SPEC OR MILITARY SPEC

I & T: IDENTIFICATION AND TRACEABILITY IN ACCORDANCE WITH : NONE

GRUMMAN AIRCRAFT ENGRG CORP, BETHPAGE, L. I., NEW YORK

SIZE	CODE IDENT NO.		
B	26512	LDW280-52608	C
SCALE NONE		SHEET 2.02	

ENG 77.2 7-65

01 NAS 9-1100

CL	-15	-13	-9	-7	-5	-3	CODE IDENT	PART NO.	I&T	NOMENCLATURE OR DESCRIPTION	MATERIAL	GOVT SPEC	COML SPEC	STOCK SIZE	PROCESS SYM	FINISH NO.	ZONE
								LDW280-17388									
J		1						-1509	E	WELDED ASSY	SEE DWG						
	1							-1508									
	1							-1507									
		1						-1506									
				1				-1505									
			1					-1504									
				1				-594									
J			1					-591									
L						1		-567									
L						1		-566		WELDED ASSY							
L						1		-484DSH-4		TUBE							
J					1			-483DSF-4									
J					1			-482DSF-4									
J				2				-662DSF-24									
L						1		-454 DSH-4									
J					1			-448DSO-4									
J			2					-663DSO-24									
L						1		-445DSH-4									
						1		-444DSH-4									
						1		-443DSH-4									
						1		-442DSH-4									
						1		-377 DSH-10									
						1		-376 DSH-10									
						1		-403 V-12									
						1		-402 V-12									
						1		-401DSH-10									
L						1		-400DSH-10									
J					1			-398DSF-4									
J					1			-479DSO-4	E	TUBE	SEE DWG						
								LDW280-17388									
	QTY PER ASSEMBLY																

SYM OR NO.	PROCESS OR FINISH	GRUMMAN SPEC OR MILITARY SPEC	SYM OR NO.	PROCESS OR FINISH	GRUMMAN SPEC OR MILITARY SPEC	SYM OR NO.	PROCESS OR FINISH	GRUMMAN SPEC OR MILITARY SPEC

I & T: IDENTIFICATION AND TRACEABILITY IN ACCORDANCE WITH : NONE

GRUMMAN AIRCRAFT ENGRG CORP, BETHPAGE, L. I., NEW YORK

SIZE	CODE IDENT NO.		
B	26512	LDW280-52608	C
SCALE NONE			SHEET 2.03

ENG 77.2 7-65

01

NAS 9-1100

CL	-15	-13	-9	-7	-5	-3	CODE IDENT	PART NO.	I&T	NOMENCLATURE OR DESCRIPTION	MATERIAL	GOVT SPEC	COML SPEC	STOCK SIZE	PROCESS SYM	FINISH NO.	ZONE
L					1	1		LSC269-252-3	E	TEE	SEE NOTE 6						
						2		-252-2									
						1		-234-18									
						2		-234-24									
						1		-234-17									
						4		204-10									
						2		-234-13									
						2		-234-2									
						2		-222-4									
						3		-222-8									
						1		-222-6		TEE							
					1			-227-4		ELBOW							
					2			-200-32		UNION							
					2			-160-4		PLUG							
					2			-113-4		SEAL							
					1	5		-226-4		ELBOW							
						1		-221-6									
						2		-220-8									
						8		-203-10									
						2		-202-10									
					2			-202-4		ELBOW							
					2			-112-4		NUT							
					2			-206-16		UNION							
					2			-229-4		CAP							
					17	16		-224-4		UNION							
						10		-218-8									
						3		-218-6									
						1		-218-4									
						4		-200-12									
						4		-200-10									
L					6	2		LSC269-200-4	E	UNION	SEE NOTE 6						

QTY PER ASSEMBLY

SYM OR NO.	PROCESS OR FINISH	GRUMMAN SPEC OR MILITARY SPEC	SYM OR NO.	PROCESS OR FINISH	GRUMMAN SPEC OR MILITARY SPEC	SYM OR NO.	PROCESS OR FINISH	GRUMMAN SPEC OR MILITARY SPEC

I & T: IDENTIFICATION AND TRACEABILITY IN ACCORDANCE WITH : NONE

GRUMMAN AIRCRAFT ENGRG CORP, BETHPAGE, L. I., NEW YORK

SIZE	CODE IDENT NO.		
B	26512	LDW280-52608	C

SCALE NONE

SHEET 2.04

01 NAS 9-1100

CL	-15	-13	-9	-7	-5	-3	CODE IDENT	PART NO.	I&T	NOMENCLATURE OR DESCRIPTION	MATERIAL	GOVT SPEC	COML SPEC	STOCK SIZE	PROCESS SYM	FINISH NO.	ZONE
L						1		LDW360-52301-1	E	XDUCER INSTL	SEE DWG						
↑						1		LDW360-52299-1	↑	↑	↑						
						1		LDW360-52293-5									
						1		LDW360-52292-1									
						1		LDW360-52293-3									
					1			LDW360-52291-1									
						1		LDW360-52289-1		↓							
↓					2			LDW360-52251-3		XDUCER INSTL	↓						
L						1		LDW310-10026-1		SEAL	SEE DWG						
A					1			NAS43DD3-16		SPACER	STD PART						
A					2			NAS43DD3-8		SPACER	STD PART						
A					6			AN960D716		WASHER	STD PART						
A					1			LDW280-17890-11		STRAP	SEE DWG						
↑						1		LDW280-17848-21		BRACKET	↑						
↓						2		LDW280P17987-3		FAIRLEAD							
A						2		LDW280P17987-1		FAIRLEAD							
L						1		LDW280-16026-1		VENT RELIEF							
L						1		LDW280P16218-13		PORT							
L						1		LDW280P16218-11		PORT							
J					1			LDW280-52983-3		WELDED ASSY							
J					1			LDW280-52983-1		WELDED ASSY	↓						
A						1		LDW280-17848-11		DOUBLER	SEE DWG						
L					4	1		LSC269-118-6		SEAL	SEE NOTE 6						
J					2			LSC269-113-4		SEAL	↑						
J					1			LSC269-118-4		SEAL							
L						2		LSC269-231-7		CROSS							
↑						2		↑ -201-10		CROSS							
						4		-205-10		CAP							
						4		-254-2		UNION REDUCER							
↓						1		↓ -248-1	↓	UNION REDUCER	↓						
L					4	4		LSC269-228-4	E	TEE	SEE NOTE 6						
	QTY PER ASSEMBLY																

SYM OR NO.	PROCESS OR FINISH	GRUMMAN SPEC OR MILITARY SPEC	SYM OR NO.	PROCESS OR FINISH	GRUMMAN SPEC OR MILITARY SPEC	SYM OR NO.	PROCESS OR FINISH	GRUMMAN SPEC OR MILITARY SPEC

I & T: IDENTIFICATION AND TRACEABILITY IN ACCORDANCE WITH : NONE

GRUMMAN AIRCRAFT ENGRG CORP, BETHPAGE, L. I., NEW YORK

SIZE B

CODE IDENT NO. 26512

LDW280-52608 C

SCALE NONE

SHEET 2.05

ENG 77.2 7-65

01

NAS 9-1100

NOTES CONTINUED:

22. AFTER INITIAL INSTALLATION, EACH BOLT PATTERN MUST BE RETORQUED IN THE TIGHTENING DIRECTION AND IN SEQUENCE TO PRINT VALUES AT 72 HOUR INTERVALS. REPEAT TWICE, i.e., THE INITIAL INSTL PLUS TWO RETORQUES.
23. TIGHTEN NUT TO A TORQUE VALUE OF 225-250 FOOT LBS. (REF LDW280M16178 & LDW280M16179)
24. TORQUE COUPLING NUTS PER LSP14-17402.
25. LOCKWIRE PER MS33540.
26. ON LDW270M10066-11, LDW280M16179-11, LDW270M10065-11, LDW280M16178-11 AND AN106406 BOLTS. LUBRICATE **PER NOTE 21** ALL THREADS, BODY & FAYING SURFACES BEFORE INSTALLING WITH DUPONT PR-240AC PER LSM14-6004.
27. TORQUE NAS1003-4H BOLTS TO 45-48 INCH LBS; INSTALL BOLTS FINGER TIGHT & TORQUE IN SEQUENCE AS FOLLOWS:
    a. PHYSICAL LOCATION FOR START OF SEQUENCE (BOLT NO. 1) IS OPTIONAL.
    b. TORQUE ALL BOLTS PER SEQUENCE TO 15 INCH LB AND REPEAT SEQUENCE UNTIL BOLTS DO NOT TURN WHEN 15 INCH POUNDS IS APPLIED.
    c. REPEAT STEP (b.) APPLYING 30 INCH POUNDS.
    d. REPEAT STEP (b.) APPLYING 45-48 INCH LBS FOR FINAL TORQUE.
28. ~~TORQUE TO 70-75 INCH POUNDS. INSTALL BOLTS AS PER PARAGRAPHS (a), (b) AND (c) OF NOTE 27 ABOVE, THEN REPEAT STEP (b) APPLYING 70-75 INCH POUNDS FOR FINAL TORQUE.~~
29. STARTING AT ANY POINT, NUMBER THE BOLT POSITIONS CONSECUTIVELY FROM 1 THRU 40. TIGHTEN ALL BOLTS FINGER TIGHT. TIGHTEN 16 BOLTS 1/8 TURN PER BOLT IN THE SEQUENCE 1, 21, 11, 31, 6, 26, 16, 36, 9, 29, 19, 39, 4, 24, 14, 34 FROM FINGER-TIGHT POSITION. REPEAT SEQUENCE UNTIL 70 INCH POUND TORQUE IS ATTAINED & IS RETAINED ON ALL 16 BOLTS. TIGHTEN ALL REMAINING BOLTS FINGER TIGHT. TORQUE ALL BOLTS TO 200 INCH-LB IN THE SEQUENCE: 1, 21, 11, 31, 6, 26, 16, 36, 9, 29, 19, 39, 4, 24, 14, 34, 7, 27, 17, 37, 2, 22, 12, 32, 8, 28, 18, 38, 3, 23, 13, 33, 10, 30, 20, 40, 5, 25, 15, AND 35. REPEAT IN SAME SEQUENCE UNTIL TORQUE OF 210 INCH POUNDS IS MAINTAINED.
30. 6856200-12101 (BOLT), 6849963 (SEAL) - IS PART OF LSC280-4-67, -69, -71 & -73
31. TORQUE AN501AD10 TO 20-23 INCH LBS.
32. ~~LPC280-40 DOES NOT APPLY TO THESE "O" RINGS & GROOVES.~~
33. INSTALL ORIFICE PLATE LDW280M16191 WITH ELECTRO ETCHED PART NO. (FACING TOWARD ENGINE).
34. ON ASSEMBLY RECORD "A" & "B". AFTER ASSEMBLY & BEFORE WELDING RECORD DIM "C". TOLERANCE ON DIM "C" IS TO BE "A" + "B" + .005 MAX.
35. UPON INSTALLATION OF -7 & -9 ASSY INTO -5 INSTL APPLY SECONDARY SEALANT LED-520-34 (NITROSO) ON OXIDIZER COVER-TANK INTERFACE & LED-520-35 (VISTANEX) ON FUEL COVER-TANK INTERFACE PER LPC280-47. LED-520 IS AN INTERIM PROCUREMENT DOCUMENT.

GRUMMAN AIRCRAFT ENGRG CORP., BETHPAGE, L. I., NEW YORK			
SIZE B	CODE IDENT NO. 26512	LDW280-52608	C
SCALE		SHEET 3.02	

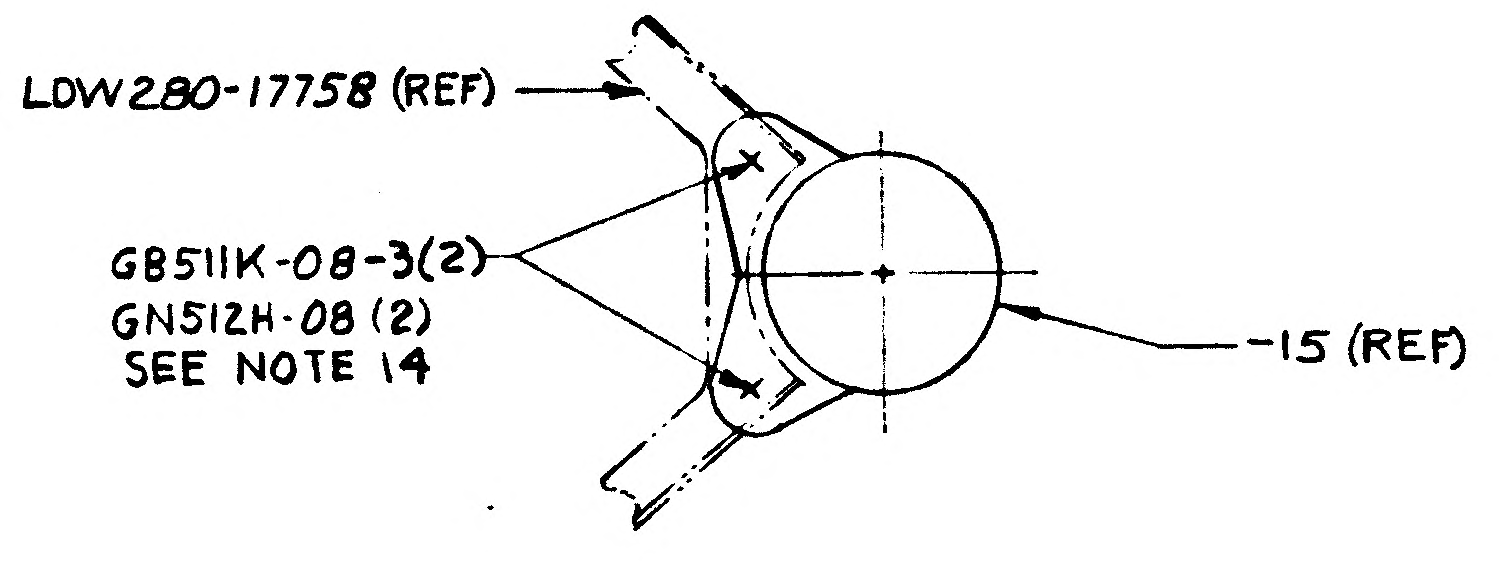
LDW280-17758 (REF)
GB511K-08-3(2)
GN512H-08 (2)
SEE NOTE 14
-15 (REF)

SECT AL-AL
ZONE 25B

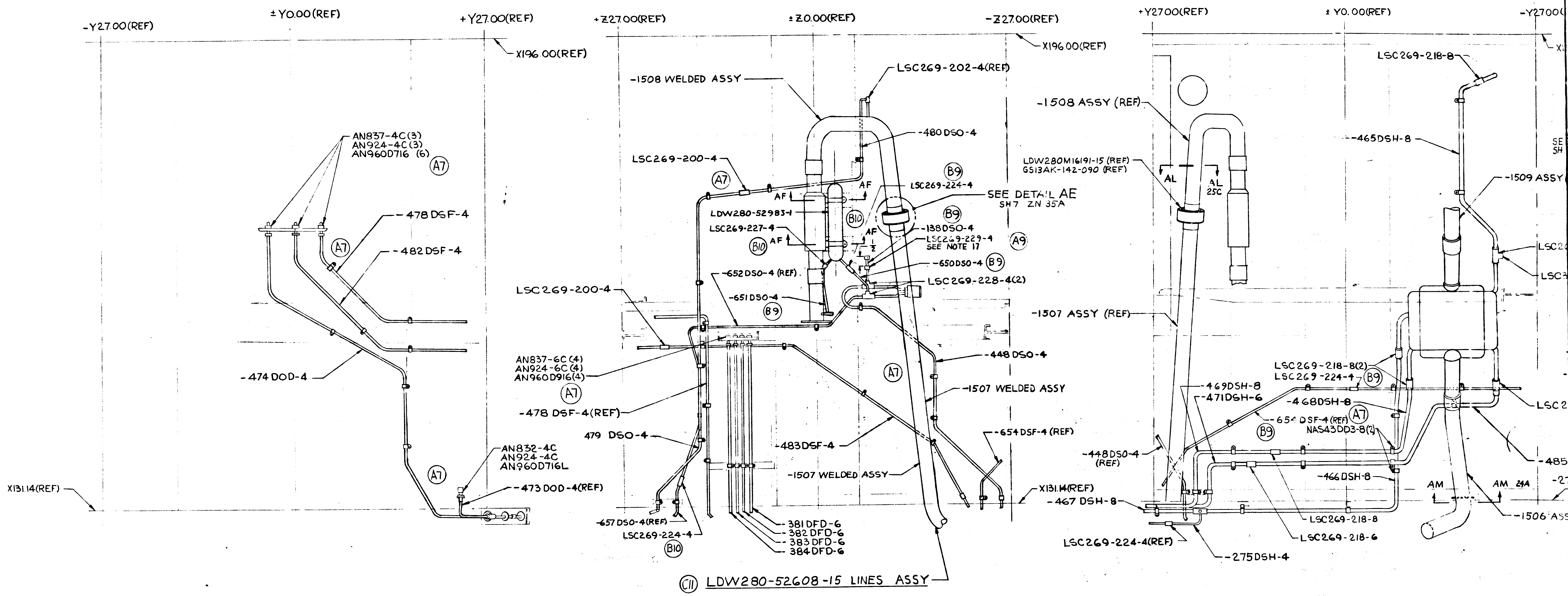
C
B
-Y27.00(REF)
±Y0.00(REF)
+Y27.00(REF)
X196.00(REF)
AN837-4C(3)
AN924-4C(3)
AN960D716 (6)
A7
-478 DSF-4
-482 DSF-4
-474 DOD-4
AN832-4C
AN924-4C
AN960D716L
-473 DOD-4(REF)
X131.14(REF)
+Z27.00(REF)
±Z0.00(REF)
-Z27.00(REF)
X196.00(REF)
-1508 WELDED ASSY
LSC269-202-4(REF)
-480 DSO-4
LSC269-200-4
B9
LSC269-224-4
SEE DETAIL AE
SH 7 ZN 35A
AF
LDW280-52983-1
LSC269-227-4
B10
-138 DSO-4
LSC269-229-4
SEE NOTE 17
A9
-650 DSO-4
-652 DSO-4 (REF)
-651 DSO-4
LSC269-228-4(2)
LSC269-200-4
-448 DSO-4
AN837-6C(4)
AN924-6C(4)
AN960D916(4)
-1507 WELDED ASSY
-478 DSF-4(REF)
479 DSO-4
-483 DSF-4
-654 DSF-4 (REF)
-1507 WELDED ASSY
X131.14(REF)
-657 DSO-4(REF)
LSC269-224-4
-381 DFD-6
-382 DFD-6
-383 DFD-6
-384 DFD-6
C11 LDW280-52608-15 LINES ASSY
+Y27.00(REF)
± Y0.00(REF)
-Y27.00(
-1508 ASSY (REF)
LSC269-218-8
-465 DSH-8
LDW280M16191-15 (REF)
GS13AK-142-090 (REF)
AL
AL 25C
-1509 ASSY
-1507 ASSY (REF)
LSC269-218-8(2)
LSC269-224-4
-469 DSH-8
-471 DSH-6
-468 DSH-8
-654 DSF-4 (REF)
NAS43DD3-8(2)
-448 DSO-4 (REF)
-466 DSH-8
AM
AM 24A
-485
-467 DSH-8
LSC269-218-8
LSC269-218-6
LSC269-224-4(REF)
-275 DSH-4
-1506 ASS

VIEW OF +Z27.00 WALL

VIEW OF +Y27.00 WALL

VIEW OF -Z27.00 WALL

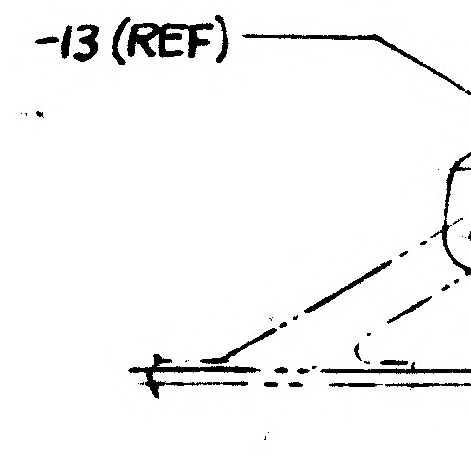

SEC

A

01/02 NAS 9-1100

CODE IDENT NO. 26512

LDW280-52608 SH 6

2/2

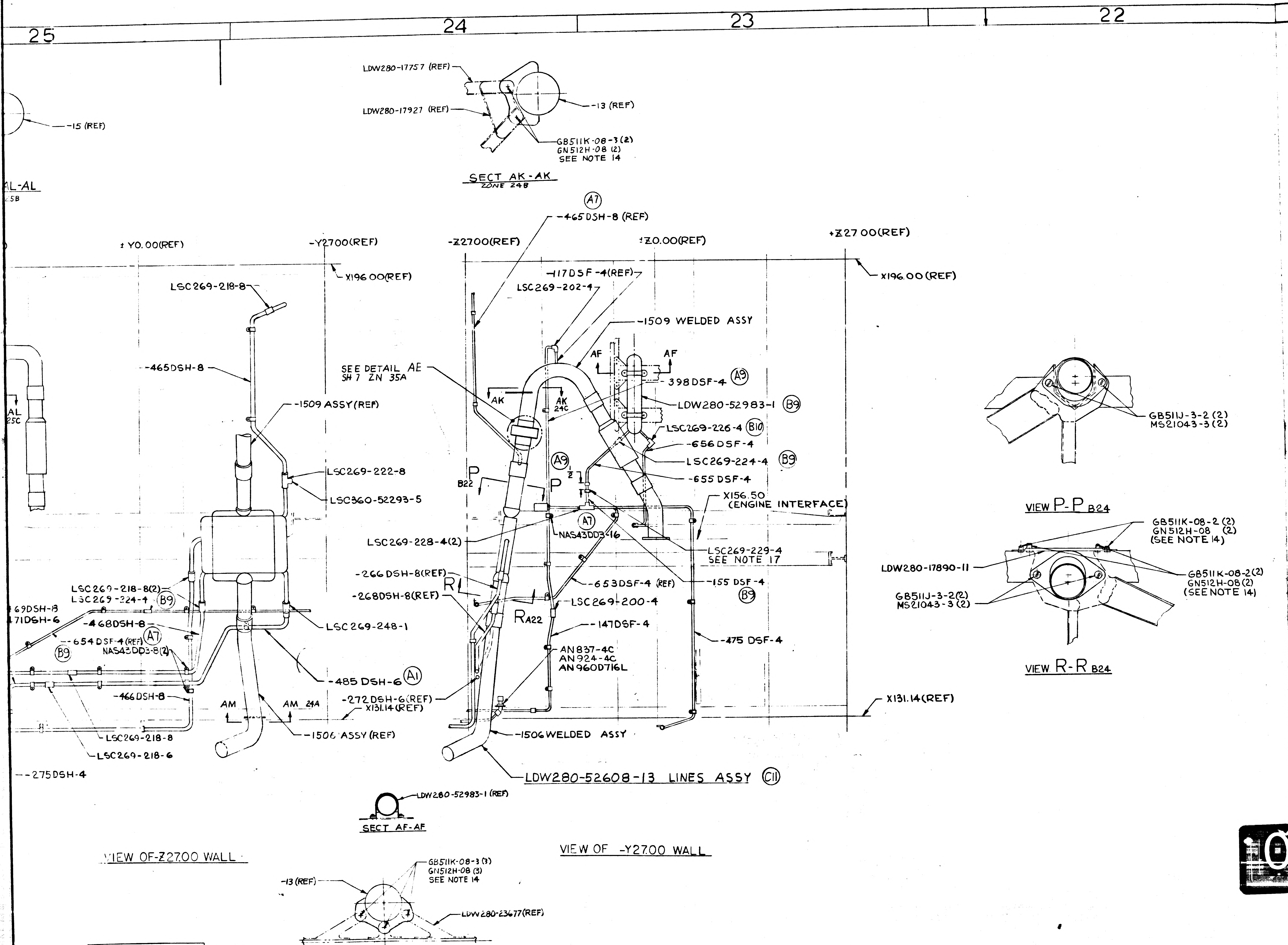
25
24
23
22
21
LDW280-17757 (REF)
LDW280-17927 (REF)
-13 (REF)
GB511K-08-3 (2)
GN512H-08 (2)
SEE NOTE 14
SECT AK-AK
ZONE 24B
-15 (REF)
AL-AL
25B
A7
-465 DSH-8 (REF)
± Y0.00(REF)
-Y27.00(REF)
-Z27.00(REF)
±Z0.00(REF)
+Z27.00(REF)
X196.00(REF)
X196.00(REF)
-117 DSF-4(REF)
LSC269-218-8
LSC269-202-4
-1509 WELDED ASSY
AF
AF
-465DSH-8
SEE DETAIL AE
SH 7 ZN 35A
-398 DSF-4
A9
-1509 ASSY(REF)
AK
AK
24C
LDW280-52983-1
B9
AL
25C
LSC269-226-4
B10
-656 DSF-4
A9
LSC269-224-4
B9
LSC269-222-8
P
B22
P
-655 DSF-4
LSC360-52293-5
X156.50
(ENGINE INTERFACE)
A7
LSC269-228-4(2)
NAS43DD3-16
LSC269-229-4
SEE NOTE 17
-266 DSH-8(REF)
R
-653DSF-4 (REF)
-155 DSF-4
B9
LSC269-218-8(2)
LSC269-224-4
B9
-268DSH-8(REF)
LSC269-200-4
69DSH-8
71DSH-6
RA22
-468DSH-8
LSC269-248-1
-147DSF-4
-654 DSF-4 (REF)
A7
-475 DSF-4
NAS43DD3-8(2)
B9
AN837-4C
AN924-4C
AN960D716L
-485 DSH-6
A1
X131.14(REF)
-466DSH-8
AM
AM 24A
-272 DSH-6(REF)
X131.14(REF)
LSC269-218-8
-1506 ASSY (REF)
-1506 WELDED ASSY
LSC269-218-6
-275DSH-4
LDW280-52608-13 LINES ASSY
C11
LDW280-52983-1 (REF)
SECT AF-AF
VIEW OF -Z27.00 WALL
VIEW OF -Y27.00 WALL
GB511K-08-3 (3)
GN512H-08 (3)
SEE NOTE 14
-13 (REF)
LDW280-23677(REF)
SECT AM-AM
ZONE 24B
GB511J-3-2 (2)
MS21043-3 (2)
VIEW P-P B24
GB511K-08-2 (2)
GN512H-08 (2)
(SEE NOTE 14)
LDW280-17890-11
GB511K-08-2(2)
GN512H-08(2)
(SEE NOTE 14)
GB511J-3-2(2)
MS21043-3 (2)
VIEW R-R B24

CODE IDENT NO. 26512	SH
LDW280-52608	6

02/02

NAS 9-1100

MANUFACTURING OPERATIONS

UNLESS OTHERWISE SPECIFIED
NOTES CHECKED √ APPLY TO THIS DWG.

PART NUMBER AND ALL OTHER MARKINGS IN REGION MARKED ⊠ USE BOTH SIDES IF NECESSARY.	
FILLET AND INSIDE CORNER RADII TOLERANCES .016R TO .062R ± .010 .063R TO .250R ± .015 OVER .250R ± .030	
DEPTH SHOWN FOR TAPPED HOLES IS FULL THDS. 2-3 IMP THDS. BEYOND PERMISSIBLE.	
EXTERNAL THREAD LENGTH SHOWN INCLUDES 2 IMPERFECT THREADS MAX.	
DO NOT CADMIUM PLATE & PAINT HOLES OR SURFACES MARKED WITH DOUBLE ASTERISK.	
MISMATCH STEP OF ± .005 PERMISSIBLE DUE TO CHANGE OF CUTTERS AT INSIDE INTERSECTING SURFACES.	
DIAMETERS MARKED MUST BE CONCENTRIC WITHIN FULL INDICATOR READING	
HOLES MUST BE KEPT FREE OF CHROME PLATING SOLUTION.	
ALL DIMENSIONS SHOWN TO BE MET AFTER CADMIUM PLATING. THICKNESS OF PLATE .0003 MIN. TO .0005 MAX. MIN. THICKNESS TO BE .0002 ON THREADED AREAS. NO ALLOWANCE FOR PLATING IN HOLES	
125 √ SURFACE ROUGHNESS INCLUDING REAMED HOLES PER MIL-STD-10	
200 √ FOR ALL DRILLED HOLES	
REMOVE ALL BURRS. BREAK ALL EDGES .015-.031	
INSPECTION INFORMATION MINIMUM PERMISSIBLE AVERAGE EDGE DISTANCE MARKED IS	
SYMBOL √ DENOTES SURFACE TO BE MACHINED	
UNLESS OTHERWISE SPECIFIED TOLERANCE ON FLANGES IS ± 1/32	
LENGTHS OF AN, NAS & MS AL ALY RIVETS SHORTER THAN 1 INCH ARE NOT SPECIFIED.	
TOLERANCE ON LOFTED DELINEATIONS IS	

DWG SIZE 28 X 84

PRINTING INFO ONLY
FULL SIZE SHEET AREA (30 X 86) = SQ. FT.
1/2 SIZE SHEET AREA (1/4 OF FULL) = SQ. FT.

PRINT TRIM LINE

C
B
A

LDW280-52608 C

LDW280-52608 C

	GRUMMAN AIRCRAFT ENGRG CORP., BETHPAGE, L. I., NEW YORK			
	SIZE H	CODE IDENT NO. 26512	LDW280-52608	C
LM MODEL OR END ITEM	SCALE		SHEET 6.00	

LDW280-52608 D

LMLK

MODEL OR END ITEM	NEXT ASSY	MODULE OR SER NO.	REQD PER MODULE OR END ITEM
LM	LDW280-52508	LM-2	1EA

PART NO. LDW280-52608-3 & -5

GAEC SCH NO. 501

5

SH REV STATUS: FOR DESCRIPTION OF REV SEE SUBQ SH

SHEET	1.00	2.00	2.01	2.02	2.03	2.04	2.05	2.06	2.07
REV	D	C	C	C	C	C	C	D	D
SHEET	3.00	3.01	3.02	4.00	5.00	6.00	7.00	3.03	2.08
REV	D	D	C	D	D	C	D	D	D
SHEET	1.10	1.11	1.12	1.13	1.14				
REV	A	C	C	D	D				

LAST SECT LTR USED AM

LAST DASH NO. USED -15

GRUMMAN REL INFO

PRIM NO.	JK (001)	
470	MP-1D	2/9/68

UNLESS OTHERWISE SPECIFIED DIMENSIONS ARE IN INCHES.

TOLERANCE UNLESS SPECIFIED FRACTIONS - DECIMALS — ANGLES

ORIG DWG AUTH

DETAIL SPEC REQUIREMENT

CLASS II ENGRG CHANGE

CLASS I ENGRG CHANGE

CONTRACT NO. NAS 9-1100

LINE ITEM 009

DOCUMENTATION TYPE II

DRAWN BY AV PURVINS

LAYOUT BY K. BIRKEL

CHECKED BY

GR LEADER [illegible] 10-14-66

VDI [illegible] 10/14

STRUCTURES [illegible] 10-14

STRUCTURES [illegible] 10-14

WEIGHTS

PROJ ENGR R.M. Carbee (E) 10-15

REL GROUP [illegible] 10/20/66

GRUMMAN AIRCRAFT ENGRG CORP
BETHPAGE, L. I., NEW YORK

LINES INSTALLATION
PROPULSION & PRESSURIZATION SYSTEM
DESCENT STAGE

SIZE B

CODE IDENT NO. 26512

LDW280-52608 D

SCALE NONE

SHEET 1.00 OF 23

7.1 12-65

01

NAS 9-1100

REVISIONS

FOR CONTINUATION OF REVISIONS SEE SHEET ______

CHANGE LTR	ITEM NO.	SHEET NO.	ZONE	GRUMMAN INFO ONLY PRIOR TO EVENT	DET SPEC	CLASS I	CLASS II	ENGRG ORDER	DESCRIPTION	EFFECTIVITY	DISPOSITION OF EXISTING PARTS REWORK	DISPOSITION OF EXISTING PARTS SCRAP	CHANGED BY AND DATE	ENGRG APPD	GOVT APPD
									ADDED SH 1.13, 1.14, 2.08 & 3.03 SH 1 OF 23 WAS SH 1 OF 19						
D	1	7.00	34C 34A 32A 30A	B		✓		EO D1 LCD 1894	IN DETAIL AJ " " AH VIEW AG-AG " Z-Z REMOVED CALLOUT .005 ALLOWABLE GAP AFTER ASSY	LM-2	✓		W. ROOS 1/20/68		
			33A 33C 31B 30B 36B						DELETED IN DETAIL V " " " Y 6849963 RACO SEAL (ON-7) (SEE NOTE 30) DELETED IN DETAIL U, 6849963 RACO SEAL (ON-9) (SEE NOTE 30) ADDED AN960C10L (4) DELETED IN DETAIL W, 6849963 RACO SEAL (ON-9) (SEE NOTE 30)						
		5.00	11B 12A 12C 14B						ADDED ON-5 6849963 RACO SEAL (4) (SEE NOTE 30)						
		2.06 2.07 2.08 3.01							ON-7 GS570M-2-224 (4) REQD WAS (2) REQD ON-9 GS570M-2-226 (4) REQD WAS (2) REQD ADDED AN960C10L (8) ON-7, (8) ON-9 6849963 RACD SEAL (4) ON-5 WAS (2) ON-7 & (2) ON-9 LDW280M16176-11 (4) ON-9 WAS (4) ON-7 LDW280M16177-11 (4) ON-7 WAS (4) ON-9 ADDED 6856183 ZERO "G" CAN (2) ON-7, (2) ON-9 ADDED AN501AD10-5 (16) ON-7, (16) ON-9 REVISED NOTE 19 "PLATES OF -7 & -9 ASSY" WAS "LDW280-17388 PLATES"						
	2	3.00		E			✓	LEO280-769/LCD1961	DELETED NOTE 7		NOT	REQD			
	3	2.07, 7.00	32A	S				LEO270-64	ON-1 & -3 LDW270M10066-13 WAS LDW270M10066-11		✓				
	4	4.00 5.00 2.06 2.08 3.03	9C 11B 12A 12C 14B			✓		EO D4 LCD 1894	ON-3 ADDED MS51957-41(8), AN960D8(8), SEE NOTE 37 ON-5 ADDED MS51957-41(8), SEE NOTE 38; LDW280M15564-11(14) MS20995NC32 (AS REQD, (SEE NOTE 25 & 36); NAS1351C4H6 (SEE NOTE 25 & 36) ADDED NOTES 36, 37 & 38.						

CHG APPROVED

LTR	GROUP LDR

GRUMMAN AIRCRAFT ENGRG CORP., BETHPAGE, L. I., NEW YORK

SIZE	CODE IDENT NO.		
B	26512	LDW280-52608	D (D)
SCALE NONE		SHEET 1.13	

ENG 77.16 3-66

01

NAS 9-1100

REVISIONS FOR CONTINUATION OF REVISIONS SEE SHEET ________

CHANGE LTR	ITEM NO.	SHEET NO.	ZONE	GRUMMAN INFO ONLY	DET SPEC	CLASS I	CLASS II	ENGRG ORDER	DESCRIPTION	EFFECTIVITY	DISPOSITION OF EXISTING PARTS REWORK	DISPOSITION OF EXISTING PARTS SCRAP	CHANGED BY AND DATE	ENGRG APPD	GOVT APPD
D	5	7.00 3.03	32A				✓	EO D5	BELOW CALLOUT LDW270M10066-13 ADDED SEE NOTE 39 ADDED NOTE 39	LM-2	NOT	REQD	W. ROOS 1/20/68		
	6	3.03						LEO280-816	ADDED NOTE 40		✓				
	7	2.07						EO D7	LDW270M10066-13 ON-7 WAS ON-1 & -3		NOT	REQD			

CHG APPROVED						
LTR	GROUP LDR	VDI		STRUCT	STRUCT	
D						

GRUMMAN AIRCRAFT ENGRG CORP., BETHPAGE, L. I., NEW YORK

SIZE	CODE IDENT NO.		
B	26512	LDW 280-52608	D
SCALE NONE			SHEET 1.14

Ⓓ

ENG 77.16 3-66

01 NAS 9-1100

CL	-15	-13	-9	-7	-5	-3	CODE IDENT	PART NO.	I&T	NOMENCLATURE OR DESCRIPTION	MATERIAL	GOVT SPEC	COML SPEC	STOCK SIZE	PROCESS SYM	FINISH NO.	ZONE
A					4			AN837-6C	E	ELBOW	STD PART						
↑					4			AN837-4C	↑	ELBOW	↑						
│					4			AN924-6C	│	NUT	│						
│					5			AN924-4C	│	NUT	│						
↓					4			AN960D916	│	WASHER	│						
A					2			AN960D716L	│	WASHER	│						
J			8	8				AN960C10L	│	WASHER	│						
J			8	8				NAS1198-4-4	│	RIVET	│						
J			AS REQD	AS REQD	AS REQD			MS20995C32	│	LOCKWIRE	│						
J			8	8				AN106406	│	BOLT	│						
L						1		AN815-4C	│	UNION	│						
A					1			AN832-4C	│	BLK. UNION	│						
A					3			NAS1097-DD5	│	RIVET	│						
A			32	32				NAS1003-4H	│	BOLT	│						
A					AS REQD			MS20470A 3	│	RIVET	│						
A					AS REQD			MS20995NC32	│	LOCKWIRE	│						
↑					6			MS20470AD3-3	│	RIVET	│						
│			8	8				MS171522	│	PIN	↓						
↓					4			MS21043-3	│	NUT	STD PART						
A						AS REQD		GT835M-8	│	TAPE	GRUMMAN STD						
L						2		GP11F-12	│	PLUG	↑						
L						2		GP11F-10	│	PLUG	│						
A					76			GN512H-08	│	NUT	│						
J			4					GS570M-2-226	│	SEAL	│						
J				4				GS570M-2-224	│	SEAL	│						
J	1	1						GS13AK-137-090	│	SEAL	│						
J	1	1						GS13AK-142-090	│	SEAL	│						
A					76			GB511K-08-3	│	BOLT	│						
↑						4		GB511J-3-2	│	↑	│						
↓						4		GB511J-3-21	↓	↓	↓						
A						4		GB511J-3-14	E	BOLT	GRUMMAN STD						

QTY PER ASSEMBLY

SYM OR NO.	PROCESS OR FINISH	GRUMMAN SPEC OR MILITARY SPEC	SYM OR NO.	PROCESS OR FINISH	GRUMMAN SPEC OR MILITARY SPEC	SYM OR NO.	PROCESS OR FINISH	GRUMMAN SPEC OR MILITARY SPEC

I & T: IDENTIFICATION AND TRACEABILITY IN ACCORDANCE WITH : NONE

GRUMMAN AIRCRAFT ENGRG CORP, BETHPAGE, L. I., NEW YORK

SIZE	CODE IDENT NO.		
B	26512	LDW280-52608	D

SCALE NONE

SHEET 2.06

ENG 77.2 7-65

01

NAS 9-1100

CL	-15	-13	-9	-7	-5	-3	CODE IDENT	PART NO.	I&T	NOMENCLATURE OR DESCRIPTION	MATERIAL	GOVT SPEC	COML SPEC	STOCK SIZE	PROCESS SYM	FINISH NO.	ZONE
A					132		73342	6856200-12101	E	BOLT	COMM. PART	(SEE NOTE 30)					
J				2			↑	6856186	↑	BAFFEL ASSY	↑	↑					
J			2				↓	6856185		BAFFEL ASSY	↓	↓					
J					4		73342	6849963		RACO SEAL	COMM. PART	(SEE NOTE 30)					
J			2	2			73342	6856183		ZERO "G" CAN	COMM PART	SEE NOTE 30					
A			1					LDW280-23621-5		SUPPORT INSTL	SEE DWG						
A				1				LDW280-23620-7		↕	↑						
A				1				LDW280-23619-5		SUPPORT INSTL							
J				4				LDW280M16193-13		GASKET							
↑			4					LDW280M16193-11		GASKET							
	1							LDW280M16191-19		ORIFICE PLATE							
		1						LDW280M16191-17		ORIFICE PLATE							
				2				LDW280M16179-11		NUT							
			2					LDW280M16178-11		NUT							
				4				LDW280M16177-11		WASHER							
			4					LDW280M16176-11		WASHER							
				1				LDW280M15566-16		COVER (FUEL -Y)							
				1				LDW280M15566-15		COVER (FUEL +Y)							
			1					LDW280M15565-16		COVER (OXID -Z)							
			1					LDW280M15565-15		COVER (OXID +Z)							
↓				2				LDW270M10066-13		NUT	↓						
J			2					LDW270M10065-11		NUT	SEE DWG						
A			1					LDW280-23622-5		SUPPORT INSTL	SEE DWG						
								LDW280-17328									
J					1			↑ -657DSO-4		TUBE	SEE DWG						
↑					1			-656DSF-4		↑	↑						
					1			-655DSF-4									
					1			-652DSO-4									
↓					1			-651DSO-4	↓	↓	↓						
J					1			↓ -650DSO-4	E	TUBE	SEE DWG						
								LDW280-17388									

QTY PER ASSEMBLY

SYM OR NO.	PROCESS OR FINISH	GRUMMAN SPEC OR MILITARY SPEC	SYM OR NO.	PROCESS OR FINISH	GRUMMAN SPEC OR MILITARY SPEC	SYM OR NO.	PROCESS OR FINISH	GRUMMAN SPEC OR MILITARY SPEC

I & T: IDENTIFICATION AND TRACEABILITY IN ACCORDANCE WITH : NONE

GRUMMAN AIRCRAFT ENGRG CORP, BETHPAGE, L. I., NEW YORK

SIZE	CODE IDENT NO.		
B	26512	LDW280-52608	D

(D)

SCALE NONE

SHEET 2.07

ENG 77.2 7-65

01

NAS 9-1100

CL	-15	-13	-9	-7	-5	-3	CODE IDENT	PART NO.	I&T	NOMENCLATURE OR DESCRIPTION	MATERIAL	GOVT SPEC	COML SPEC	STOCK SIZE	PROCESS SYM	FINISH NO.	ZONE
J					14			LDW280M15564-11	E	BOLT	SEE DWG						
J					1			NAS1351C4H6	E	BOLT	STD PART						
J					8	8		MS51957-41	E	SCREW	STD PART						
J						8		AN960D8	E	WASHER	STD PART						
J			16	16				AN501AD10	E	SCREW	STD PART						

QTY PER ASSEMBLY

SYM OR NO.	PROCESS OR FINISH	GRUMMAN SPEC OR MILITARY SPEC	SYM OR NO.	PROCESS OR FINISH	GRUMMAN SPEC OR MILITARY SPEC	SYM OR NO.	PROCESS OR FINISH	GRUMMAN SPEC OR MILITARY SPEC

I & T: IDENTIFICATION AND TRACEABILITY IN ACCORDANCE WITH :

GRUMMAN AIRCRAFT ENGRG CORP, BETHPAGE, L. I., NEW YORK

SIZE	CODE IDENT NO.		
B	26512	LDW280-52608	D Ⓓ
SCALE NONE		SHEET 2.08	

ENG 77.2 7-65

01

NAS 9-1100

NOTES:

1. SUBSTITUTION OF NAS1132V AND NAS1133V SCREWS FOR GB511J-08 AND GB511J-3 BOLTS IS PERMISSIBLE.

2. TUBE NUMBERS AND WELDED ASSY NUMBERS ARE DASH NUMBERS OF DWG LDW280-17388.

3. ENGINE OVERBOARD DRAIN LINES SHALL BE INSTALLED WITH A DOWNWARD PITCH AND SHALL BE FREE OF ENTRAPMENTS.

4. ~~TORQUE TANK BOLTS NAS673V3H TO 45-48 INCH POUNDS. LUBRICATE BOLT THREADS WITH DUPONT PR-240AC BEFORE INSTALLING. SAFETY WIRE PER MS33540.~~

5. SELECTION AND INSTALLATION OF LINE CLAMPS TO BE IN ACCORDANCE WITH LPC-280-22 EXCEPT AS NOTED.

6. COMMERCIAL PARTS, SEE SPECIFICATION CONTROL DRAWING BEFORE ORDERING.

~~7. BONDING SHALL BE IN ACCORDANCE WITH LSP 390-001.~~

~~8. ADD DUPONT PR240AC LUBRICANT ON ALL THREADED FITTINGS.~~

9. LSC269 (GAMAH) -100 SERIES CONNECTIONS PER LSP14-17402.

~~10. BRAZED CONNECTIONS PER LSP14 6303.~~

11. ~~PROCEDURE FOR INSTALLING ORIFICE PLATES IN DESCENT STAGE PROPELLANT LINES~~
    ~~a. LOOSEN SUPPORT CLAMP BETWEEN ORIFICE AND ENGINE.~~
    ~~b. REMOVE THE FOUR 1/4" RETAINING BOLTS SECURING THE ORIFICE PLATE AND TWO ORIFICE FLANGES (THREE (3) AN4C7A BOLTS AND ONE (1) AN174C7A BOLT)~~
    ~~c. ALTERNATELY ROTATE THE THREE (3) SPREADER BOLTS (AN4DD6A) UNTIL THE TWO ORIFICE FLANGES ARE SEPARATED APPROX 1/8".~~
    ~~NOTE: IF IT IS DEEMED NECESSARY TO REPLACE THE TWO TEFLON "O" RING SEALS IN THE ORIFICE FLANGES, INCREASE THE FLANGE SEPARATION TO PERMIT SEAL REMOVAL AND REPLACEMENT.~~
    ~~d. GRASP THE ORIFICE PLATE TAB AND LIFT UP APPROX 1/16" TO FREE THE PLATE FROM THE INDEX PIN INSTALLED IN LDW270M10004 FLANGE ASSY AND REMOVE GPION 140~~
    e. ~~INSTALL NEW ORIFICES GPION-27 (FUEL SIDE) & GPION-50 (OXIDIZER SIDE) (DASH NUMBER TO BE DETERMINED ON INSTL & ENGRG. NOTIFIED.), BY REVERSING PROCEDURE ABOVE. AFTER ALIGNING ORIFICE PLATE WITH INDEXING PIN, INSTALL THE CLOSE TOLERANCE AN174C7A BOLT BEFORE INSTALLING THE THREE (3) AN4C7A RETAINING BOLTS, TORQUE ALL FOUR (4) RETAINING BOLTS TO 70-80 INCH POUNDS~~

GRUMMAN AIRCRAFT ENGRG CORP., BETHPAGE, L. I., NEW YORK			
SIZE B	CODE IDENT NO. 26512	LDW280-52608	D
SCALE		SHEET 3.00	

ENG 73.1 6-64

01 NAS 9-1100

NOTES CONTINUED:

12. AFTER "COLD FLOW" CUT BACK LDW280-17388-374 DSH-10 THRU -377DSH-10 TO CREATE LDW280-52608-11, 4 PLACES.

13. AFTER BRAZING OPERATION IS COMPLETED WRAP ONE LAYER OF GT835M-8 TAPE (ALUMINIZED MYLAR) PER DETAIL S-S. OVER LAP ENDS 1/4 MIN.

14. INSTALL GB511K FASTENERS PER LSP-14-15306.

~~15. GP10N-27 IS IDENTICAL TO LDW270M10014-11, GP10N-50 IS IDENTICAL TO LDW270M10014-57, GP10N-140 IS IDENTICAL TO LDW270M10003-1~~

16. CONDUCT A 50 PSIG GASEOUS LEAK CHECK TO VERIFY INTEGRITY OF PROPULSION SYSTEM AS FOLLOWS:
    a) INSTALL A 0-100 PSI GAGE & SHUT OFF VALVE UPSTREAM OF THE LSC270-805-1 OXIDIZER FILL VENT DISCONNECT COUPLING & CONNECT TO HELIUM SUPPLY SOURCE
    b) OPEN SUPPLY VALVE UNTIL PRESSURE IN OXIDIZER SIDE OF SYSTEM READS 50 PSIG ± 1 PSIG CLOSE SHUT OFF VALVE & MONITOR GAGE TO ASSURE THERE IS NO PRESSURE DROP FOR A PERIOD OF 30 MINUTES
    c) AFTER SUCCESSFUL COMPLETION OF THE PRESSURE DECAY TEST ON SYSTEM OXIDIZER SIDE CONNECT GAGE & SHUT OFF VALVE UPSTREAM OF THE LSC270-804-1 FUEL FILL VENT DISCONNECT COUPLING & REPEAT STEPS a & b ABOVE ON THE PROPULSION SYSTEM FUEL SIDE

17. AFTER COLD FLOW I, CUT OFF AN FITTINGS & INSTALL LSC269-229-4 CAPS

18. INDUCTION BRAZE ALL LSC269-200 SERIES & -300 SERIES FITTINGS PER LSP14-6303

19. SHIM AS REQD USING 2024-T3 AL ALLOY SH, QQ-A-250/4, FIN 88. SHIM TO MATCH CONTOUR OF PLATES OF -7 & -9 ASSY., WITHIN ± 1/16

20. PROPELLENT BELLOWS ARE TO BE INSTALLED PER LEI 280-010

21. LUBRICANT SHALL BE APPLIED IN DROPLETS OF 3/32 ± 1/32 OF AN INCH IN DIAMETER AND 1/2 ± 1/8 OF AN INCH APART, MINIMUM OF 2 DROPLETS, ON SURFACE OR THREAD TO BE LUBRICATED.

GRUMMAN AIRCRAFT ENGRG CORP., BETHPAGE, L. I., NEW YORK			
SIZE B	CODE IDENT NO. 26512	LDW280-52608	D
SCALE		SHEET 3.01	

ENG 73.1 6-64

01 NAS 9-1100

NOTES CONTINUED;

36. INSTALL BOLTS PER LPC 280-47. TORQUE TO 15-20 IN-LBS & LOCKWIRE TO TANK COVER BOLTS

37. ON INSTALLATION APPLY SECONDARY SEALANT LSM 14-4106 (NITROSO) ON DIFFUSERS OF OXIDIZER TANKS AND LSM 14-1405 (VISTANEX) ON DIFFUSER OF FUEL TANKS PER LPC 280-46 AFTER PROCEDURE HAS BEEN ACCOMPLISHED, INSTALL MS 51957-41 SCREWS PER LPC 280-47 & TORQUE TO 15-20 IN. LBS

38 REMOVE MS 51957-41 SCREW PRIOR TO LEAK CHECK OF PRIMARY SEAL. AFTER LEAK CHECK HAS BEEN PERFORMED, RE-INSTALL SCREWS PER LPC 280-47, TORQUE TO 15-20 IN LBS

39 LDW 270M10066-11 MAY BE USED AS AN ALTERNATE PART ON -7

40 ANY TWO ADJACENT BOLTS MAY BE REMOVED, REINSTALLED AND TORQUED TO PRINT VALUES WITHOUT REPEATING THE 72 HRS TORQUE CYCLE.

GRUMMAN AIRCRAFT ENGRG CORP., BETHPAGE, L. I., NEW YORK

SIZE	CODE IDENT NO.		
B	26512	LDW 280-52608	D
SCALE		SHEET 3.03	

ENG 73.1 6-64

01

NAS 9-1100

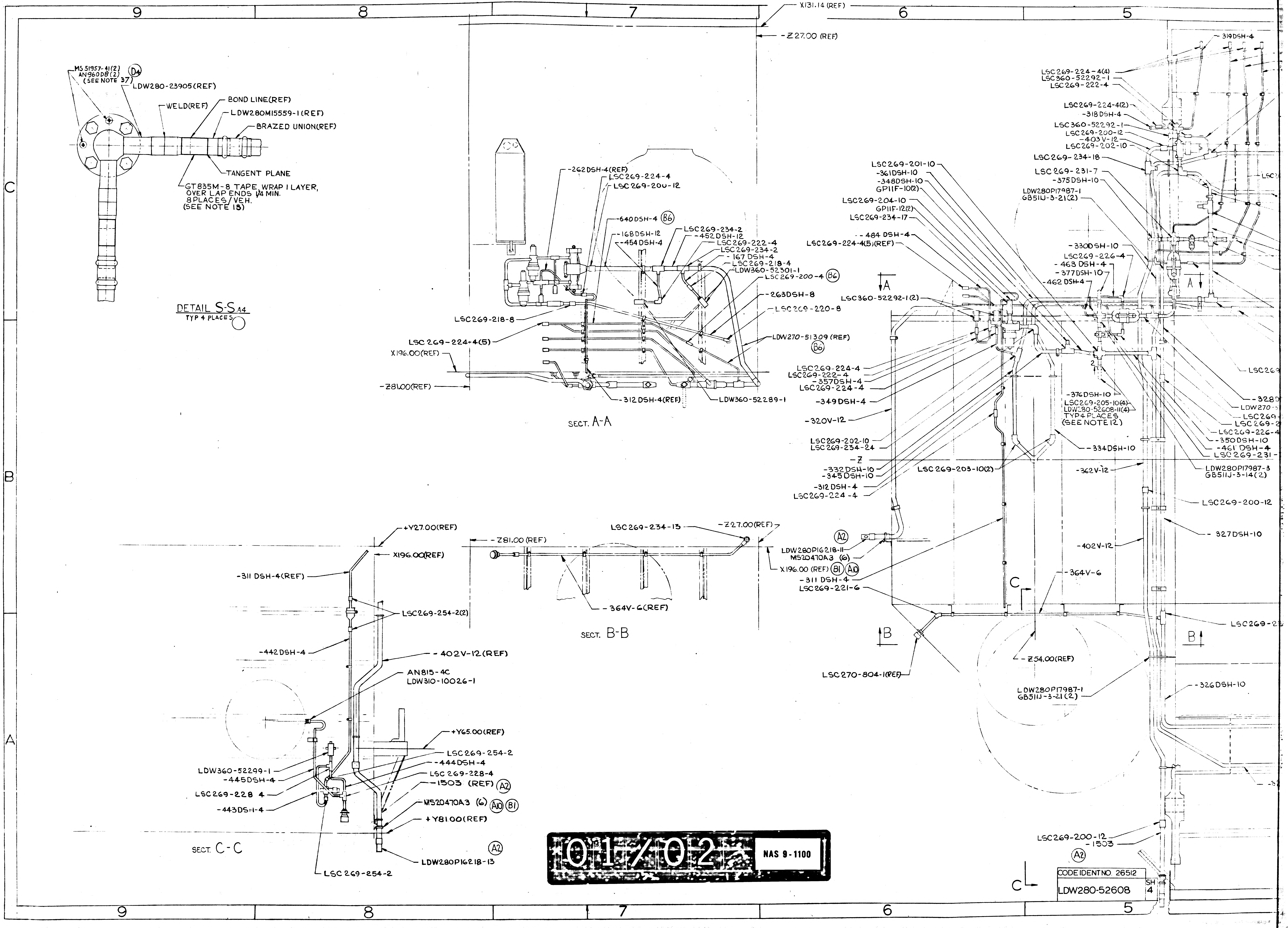

9
8
7
6
5
X131.14 (REF)
-Z27.00 (REF)
MS 51957-41(2)
AN960D8(2)
(SEE NOTE 37)
D4
LDW280-23905(REF)
WELD(REF)
BOND LINE(REF)
LDW280M15559-1(REF)
BRAZED UNION(REF)
TANGENT PLANE
GT835M-8 TAPE, WRAP 1 LAYER, OVER LAP ENDS 1/4 MIN. 8 PLACES/VEH. (SEE NOTE 13)
DETAIL S-S A4
TYP 4 PLACES
C
B
A
-262DSH-4(REF)
LSC269-224-4
LSC269-200-12
-640DSH-4 B6
-168DSH-12
-454DSH-4
LSC269-234-2
-452DSH-12
LSC269-222-4
LSC269-234-2
-167DSH-4
LSC269-218-4
LDW360-52301-1
LSC269-200-4 B6
-263DSH-8
LSC269-220-8
LDW270-51309 (REF)
B6
LSC269-218-8
LSC269-224-4(5)
X196.00(REF)
-Z81.00(REF)
-312DSH-4(REF)
LDW360-52289-1
SECT. A-A
-319DSH-4
LSC269-224-4(4)
LSC360-52292-1
LSC269-222-4
LSC269-224-4(2)
-318DSH-4
LSC360-52292-1
LSC269-200-12
-403V-12
LSC269-202-10
LSC269-234-18
LSC269-231-7
-375DSH-10
LDW280P17987-1
GB511J-3-21(2)
LSC269-201-10
-361DSH-10
-348DSH-10
GP11F-10(2)
LSC269-204-10
GP11F-12(2)
LSC269-234-17
-484DSH-4
LSC269-224-4(5)(REF)
-330DSH-10
LSC269-226-4
-463DSH-4
-377DSH-10
-462DSH-4
A
A
LSC360-52292-1(2)
LSC269-224-4
LSC269-222-4
-357DSH-4
LSC269-224-4
-349DSH-4
-320V-12
2
-376DSH-10
LSC269-205-10(4)
LDW280-52608-11(4)
TYP 4 PLACES
(SEE NOTE 12)
LSC269-202-10
LSC269-234-24
-Z
-332DSH-10
-345DSH-10
-312DSH-4
LSC269-224-4
LSC269-203-10(2)
-334DSH-10
-362V-12
LSC2
LSC269
-328D
LDW270-5
LSC269-
LSC269-2
LSC269-226-4
-350DSH-10
-461DSH-4
LSC269-231-
LDW280P17987-3
GB511J-3-14(2)
LSC269-200-12
-327DSH-10
-402V-12
A2
LDW280P16218-11
MS20470A3 (6)
X196.00 (REF) B1 A10
-311DSH-4
LSC269-221-6
-364V-6
C
B
B
LSC269-2
LSC270-804-1(REF)
-Z54.00(REF)
LDW280P17987-1
GB511J-3-21(2)
-326DSH-10
-5
LSC269-200-12
-1503
A2
C
+Y27.00(REF)
X196.00(REF)
-311DSH-4(REF)
LSC269-254-2(2)
-442DSH-4
-402V-12(REF)
AN815-4C
LDW310-10026-1
+Y65.00(REF)
LSC269-254-2
-444DSH-4
LSC269-228-4
-1503 (REF) A2
MS20470A3 (6) A10 B1
+Y81.00(REF)
A2
LDW280P16218-13
LSC269-254-2
LDW360-52299-1
-445DSH-4
LSC269-228 4
-443DSH-4
SECT. C-C
LSC269-234-13
-Z27.00(REF)
-Z81.00 (REF)
-364V-6(REF)
SECT. B-B
3/3

01/02

NAS 9-1100

CODE IDENT NO. 26512

LDW280-52608 SH 4

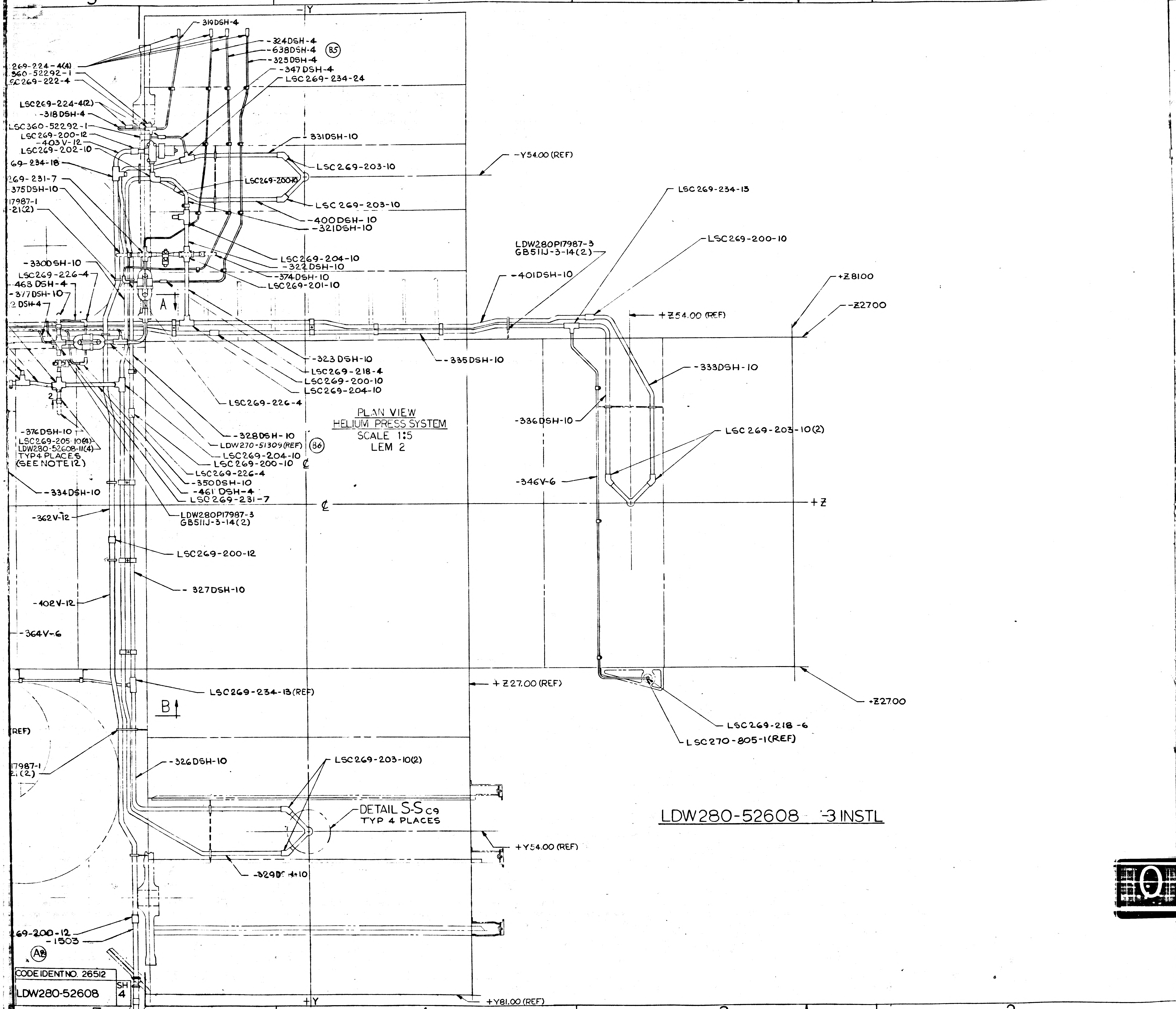
5
4
3
2
1
-Y
+Y
319DSH-4
-324DSH-4
-638DSH-4
B5
-325DSH-4
-347 DSH-4
LSC269-234-24
269-224-4(4)
360-52292-1
SC269-222-4
LSC269-224-4(2)
-318DSH-4
LSC360-52292-1
LSC269-200-12
-403V-12
LSC269-202-10
69-234-18
269-231-7
375DSH-10
17987-1
-21(2)
-331DSH-10
LSC269-203-10
LSC269-200-10
LSC 269-203-10
-400DSH-10
-321DSH-10
-Y54.00 (REF)
LSC269-234-13
LDW280P17987-3
GB51IJ-3-14(2)
LSC269-200-10
LSC269-204-10
-322DSH-10
-374DSH-10
LSC269-201-10
-330DSH-10
LSC269-226-4
-463 DSH-4
-377DSH-10
2 DSH-4
A
-401DSH-10
+Z54.00 (REF)
+Z8100
-Z2700
-323 DSH-10
LSC269-218-4
LSC269-200-10
LSC269-204-10
-335DSH-10
-333DSH-10
LSC269-226-4
PLAN VIEW
HELIUM PRESS SYSTEM
SCALE 1:5
LEM 2
-336DSH-10
LSC 269-203-10(2)
-376DSH-10
LSC269-205-10(4)
LDW280-52608-11(4)
TYP 4 PLACES
(SEE NOTE 12)
-328DSH-10
LDW270-51309(REF)
B6
LSC269-204-10
LSC269-200-10
℄
LSC269-226-4
-350DSH-10
-461 DSH-4
LSC269-231-7
-346V-6
-334DSH-10
℄
+Z
-362V-12
LDW280P17987-3
GB51IJ-3-14(2)
LSC269-200-12
-327DSH-10
-402V-12
-364V-6
+Z27.00 (REF)
LSC269-234-13(REF)
+Z27.00
B
LSC269-218-6
LSC270-805-1(REF)
(REF)
17987-1
2.(2)
-326DSH-10
LSC269-203-10(2)
DETAIL S-S C9
TYP 4 PLACES
+Y54.00 (REF)
-329D-10
269-200-12
-1503
A8
+Y81.00 (REF)
LDW280-52608 -3 INSTL

CODE IDENT NO. 26512
LDW280-52608
SH 4

MANUFACTURING OPERATIONS
UNLESS OTHERWISE SPECIFIED
NOTES CHECKED √ APPLY TO THIS DWG.

PART NUMBER
AND ALL OTHER MARKINGS
IN REGION MARKED ⊠
USE BOTH SIDES IF NECESSARY.

FILLET AND INSIDE CORNER
RADII TOLERANCES
.016R TO .062R ± .010
.063R TO .250R ± .015
OVER .250R ± .030

DEPTH SHOWN FOR TAPPED
HOLES IS FULL THDS. 2-3 IMP THDS.
BEYOND PERMISSIBLE.

EXTERNAL THREAD LENGTH
SHOWN INCLUDES
2 IMPERFECT THREADS MAX.

DO NOT CADMIUM PLATE & PAINT
HOLES OR SURFACES MARKED
WITH DOUBLE ASTERISK.

MISMATCH STEP OF ± .005
PERMISSIBLE DUE TO CHANGE
OF CUTTERS AT INSIDE
INTERSECTING SURFACES.

DIAMETERS MARKED
MUST BE CONCENTRIC WITHIN
FULL INDICATOR
READING

HOLES MUST BE KEPT FREE OF
CHROME PLATING SOLUTION.

ALL DIMENSIONS SHOWN TO BE MET
AFTER CADMIUM PLATING.
THICKNESS OF PLATE .0003 MIN.
TO .0005 MAX. MIN. THICKNESS TO
BE .0002 ON THREADED AREAS.
NO ALLOWANCE FOR PLATING IN
HOLES

$\sqrt{125}$ SURFACE ROUGHNESS
INCLUDING REAMED HOLES
PER MIL-STD-10

$\sqrt{200}$ FOR ALL DRILLED HOLES

REMOVE ALL BURRS.
BREAK ALL EDGES .015-.031

INSPECTION INFORMATION
MINIMUM PERMISSIBLE
AVERAGE EDGE DISTANCE
MARKED IS

SYMBOL ∱ DENOTES SURFACE
TO BE MACHINED

UNLESS OTHERWISE SPECIFIED
TOLERANCE ON FLANGES IS ± 1/32

LENGTHS OF AN, NAS & MS AL ALY
RIVETS SHORTER THAN 1 INCH ARE
NOT SPECIFIED.

TOLERANCE ON LOFTED
DELINEATIONS IS

DWG SIZE 34 X 90

PRINTING INFO ONLY
FULL SIZE SHEET AREA (36 X 100) 25.0 SQ. FT.
1/2 SIZE SHEET AREA (1/4 OF FULL) 6.2 SQ. FT.

PRINT TRIM LINE

C
B
A

LDW280-52608 D
LDW280-52608 D

02/02

NAS 9-1100

GRUMMAN AIRCRAFT ENGRG CORP., BETHPAGE, L. I., NEW YORK

LM	SIZE J	CODE IDENT NO. 26512	LDW280-52608	D. ⑥
MODEL OR END ITEM	SCALE			SHEET 4.00

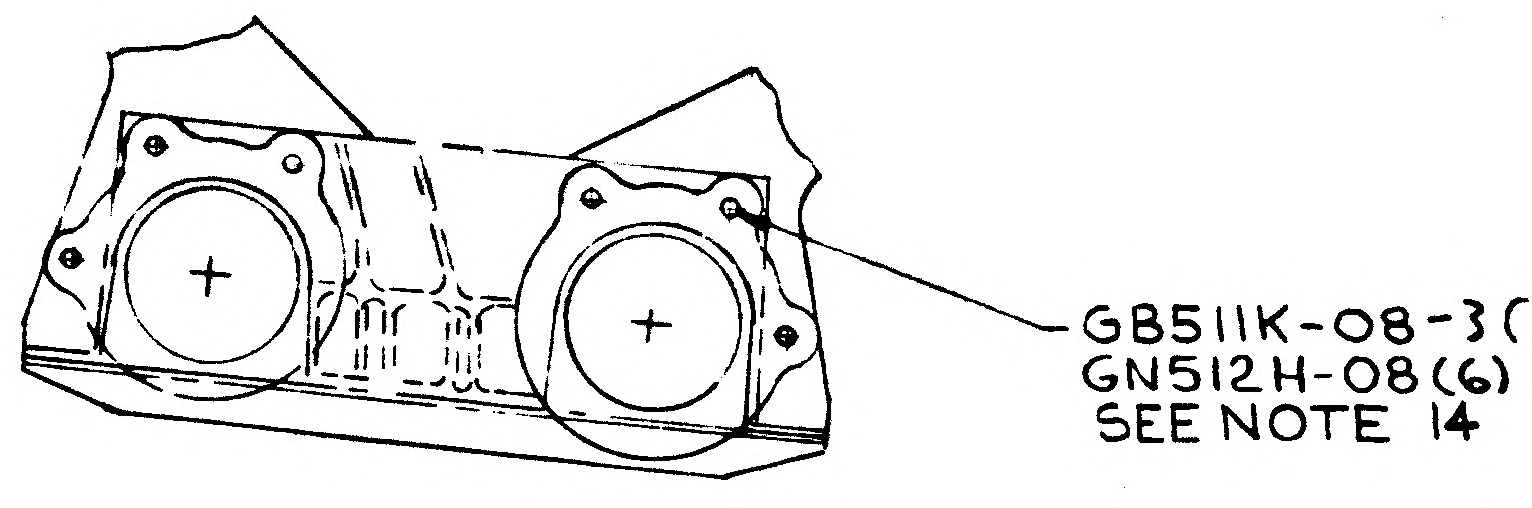
GB511K-08-3(6)
GN512H-08(6)
SEE NOTE 14

SECT. M-M B11

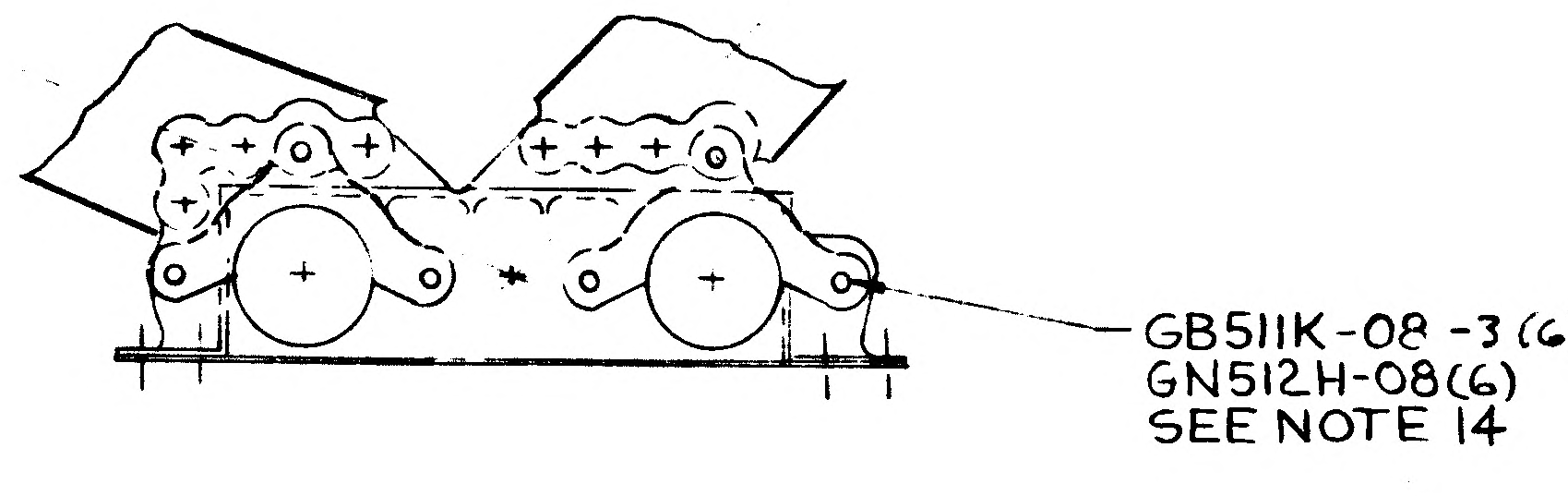
GB511K-08-3(6)
GN512H-08(6)
SEE NOTE 14

SECT. E-E C13

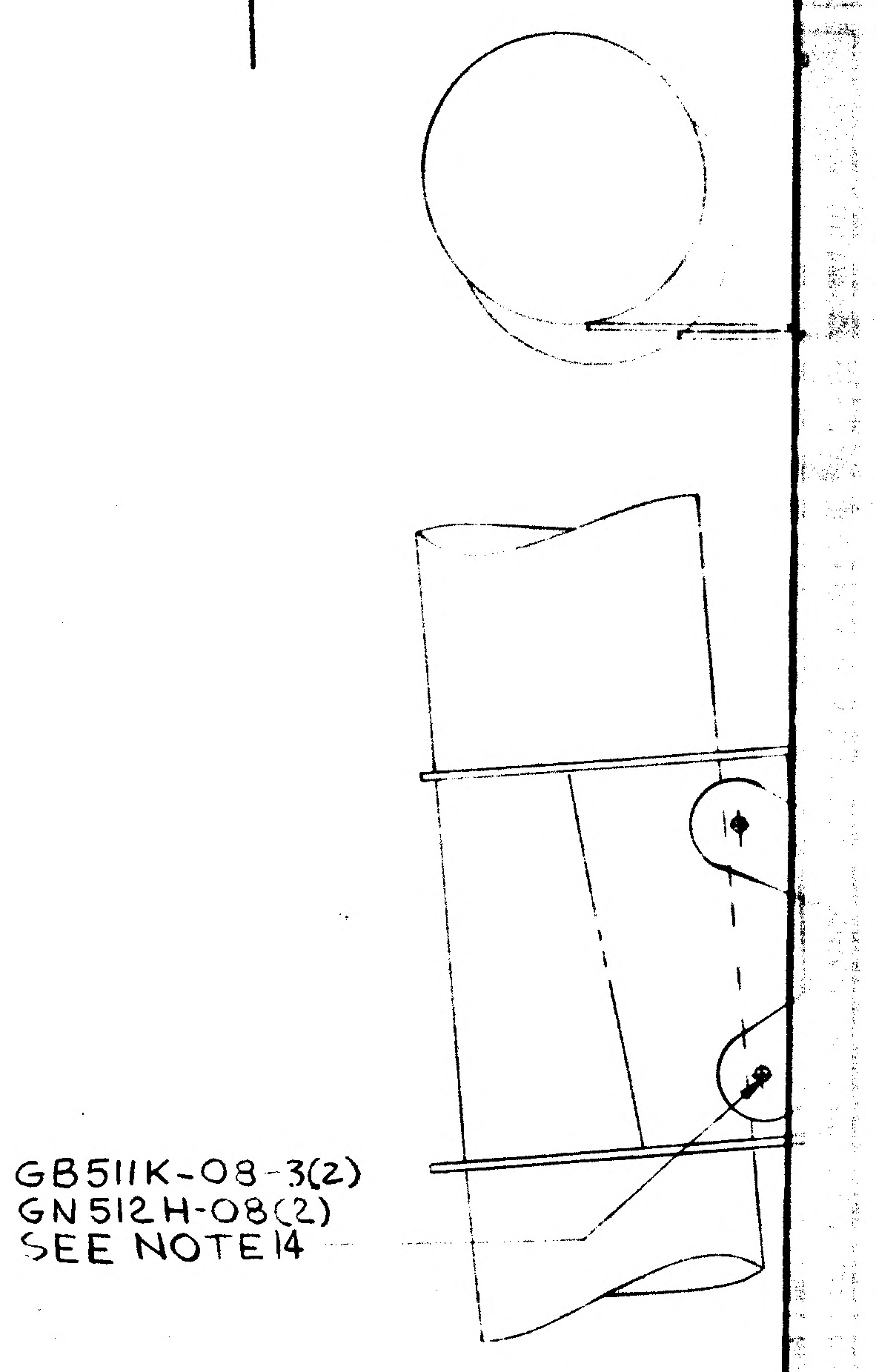
GB511K-08-3(2)
GN512H-08(2)
SEE NOTE 14

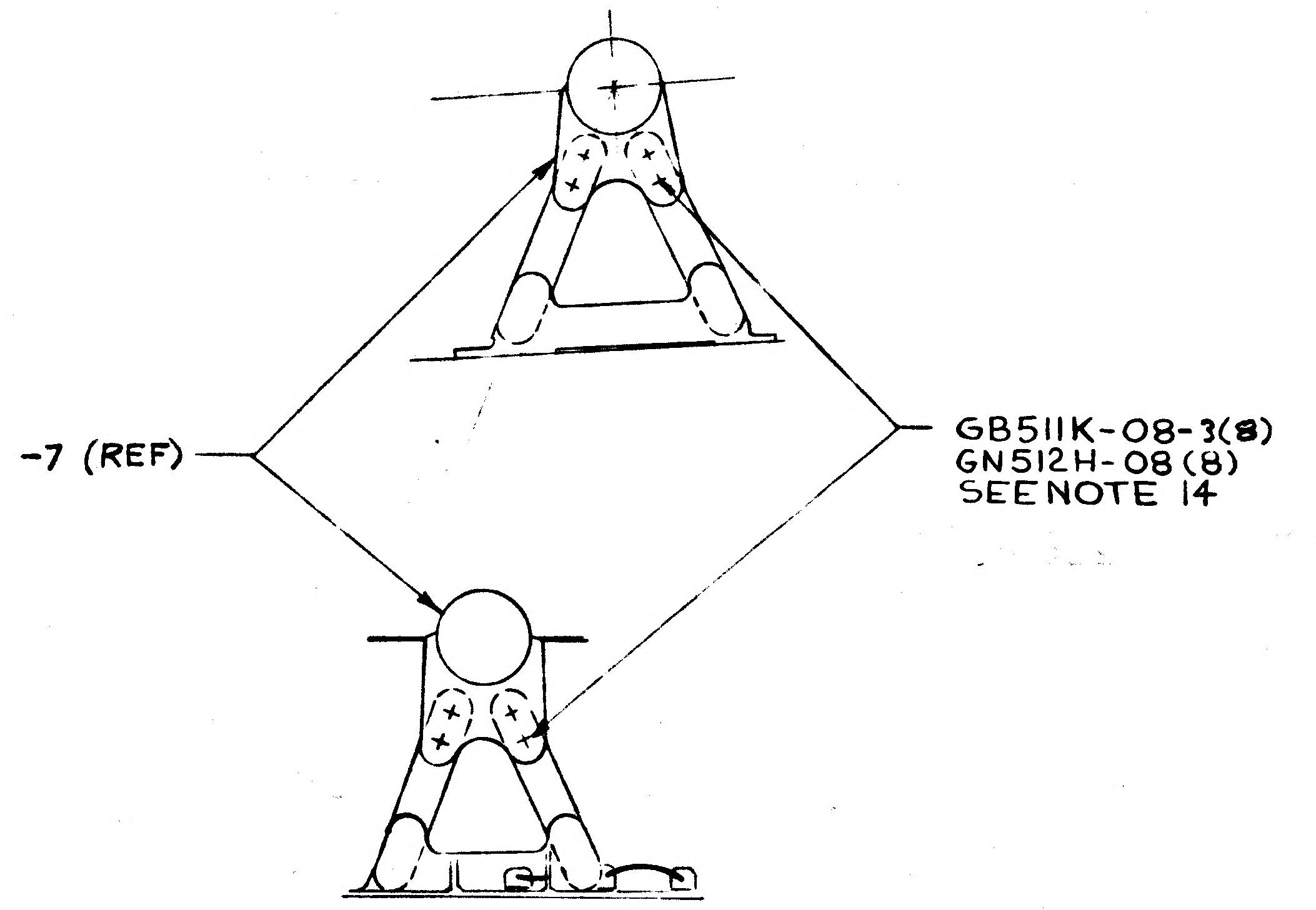
-7 (REF)
GB511K-08-3(8)
GN512H-08(8)
SEE NOTE 14

SECT. D-D A13, C12
TYP 2 PLACES

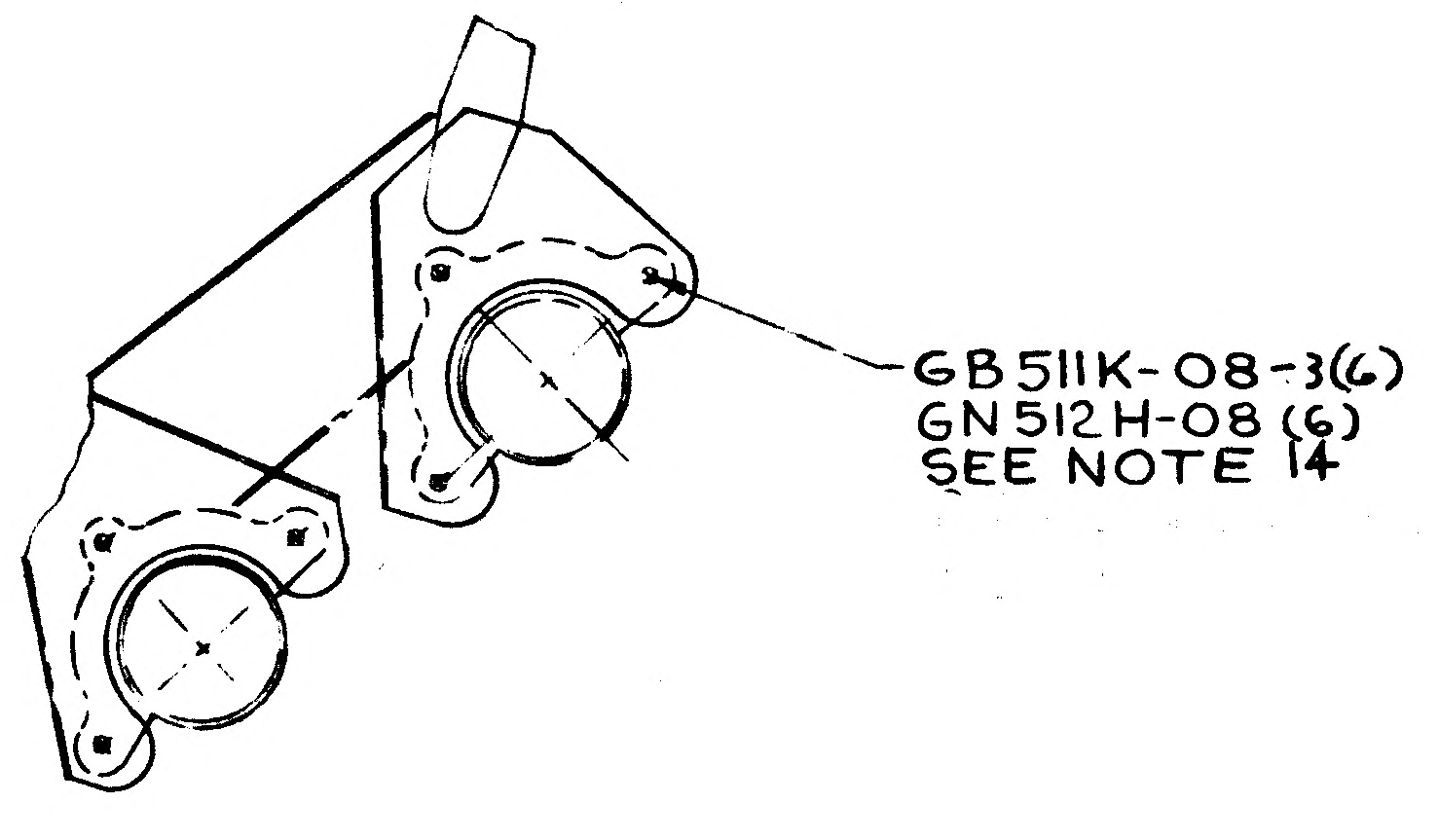
GB511K-08-3(6)
GN512H-08(6)
SEE NOTE 14

SECT. N-N A12

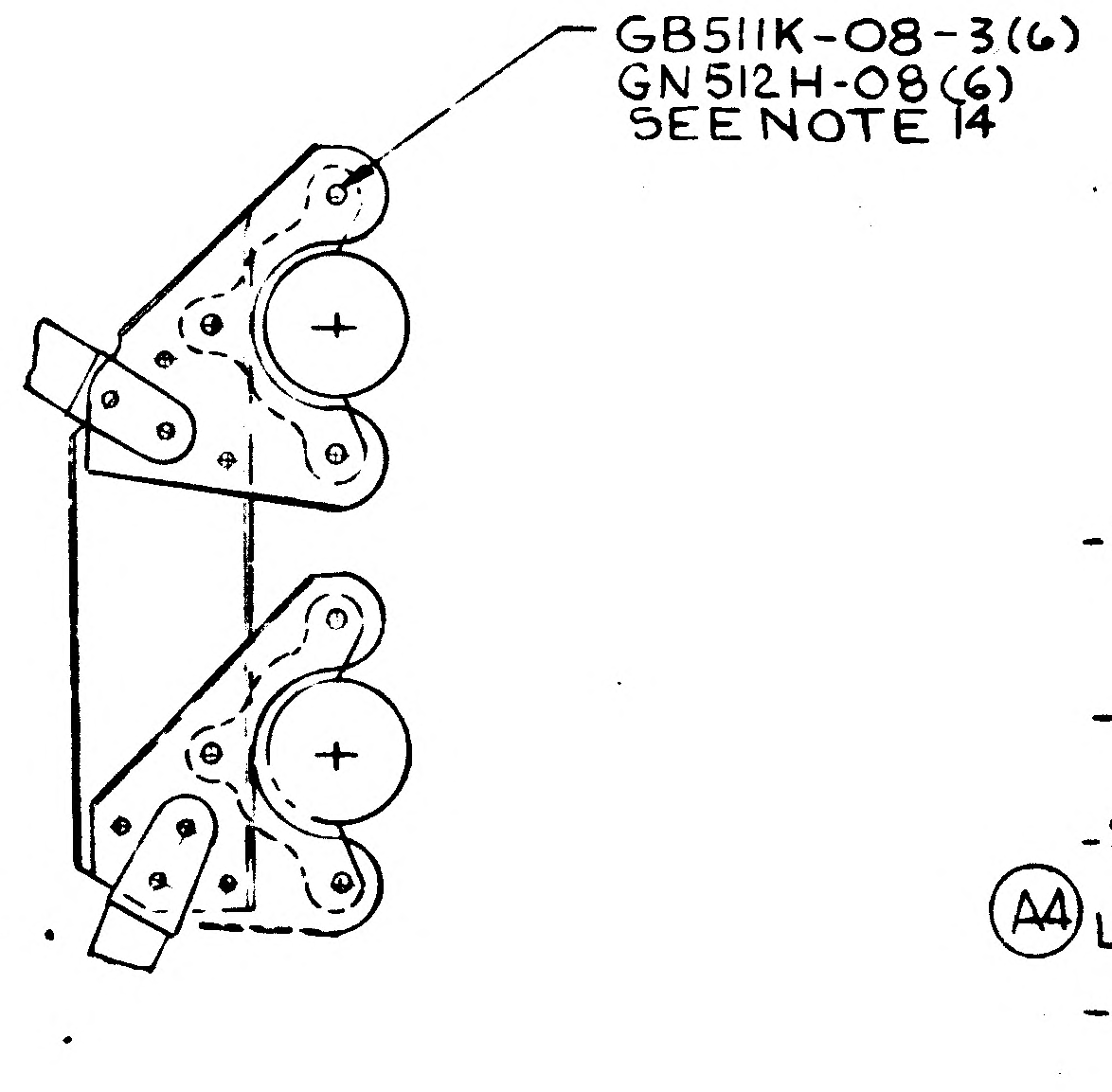
GB511K-08-3(6)
GN512H-08(6)
SEE NOTE 14

SECT. F-F C13

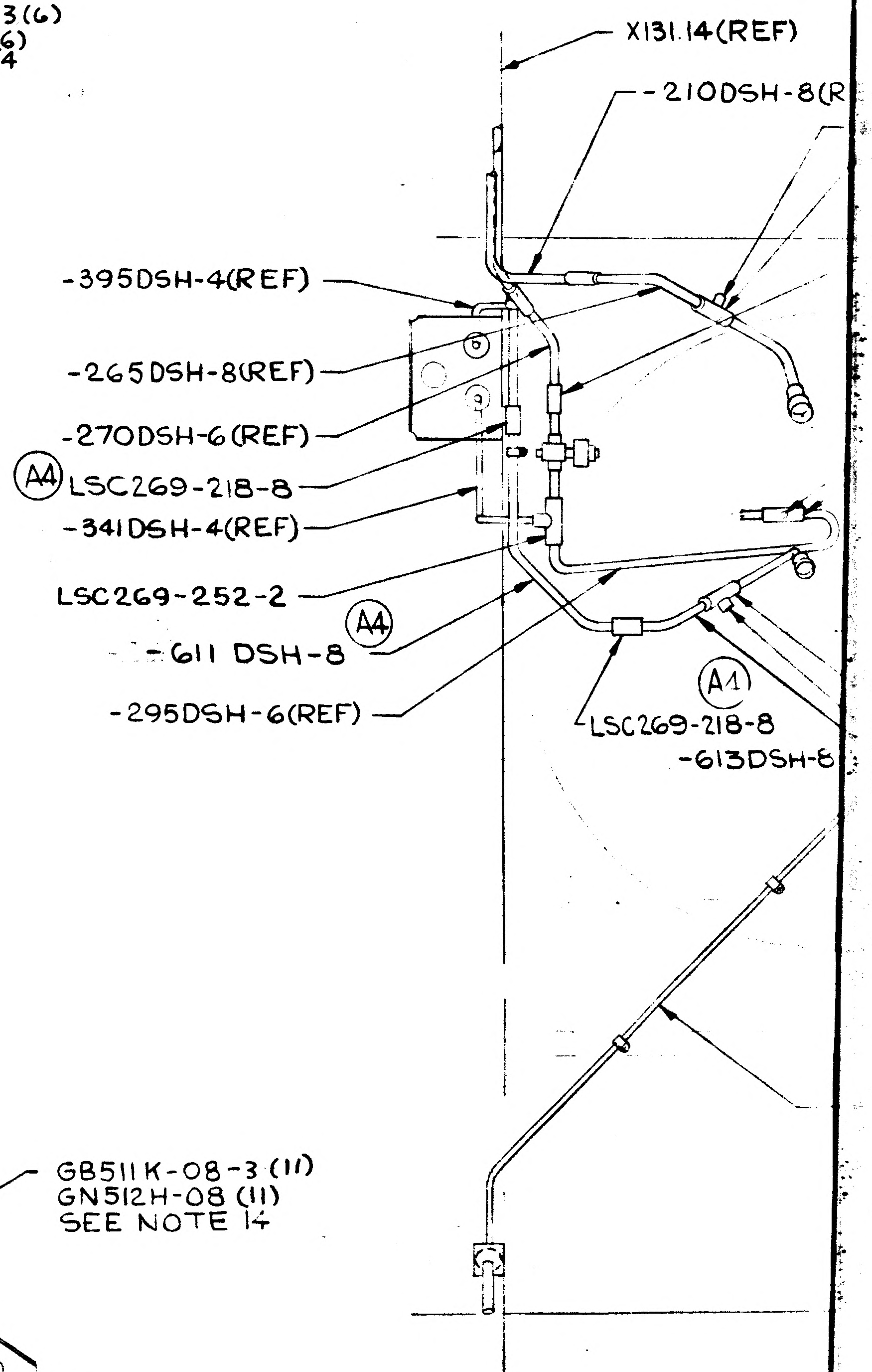
X131.14(REF)
-210DSH-8(R
-395DSH-4(REF)
-265DSH-8(REF)
-270DSH-6(REF)
A4
LSC269-218-8
-341DSH-4(REF)
LSC269-252-2
-611 DSH-8
A4
-295DSH-6(REF)
A1
LSC269-218-8
-613DSH-8

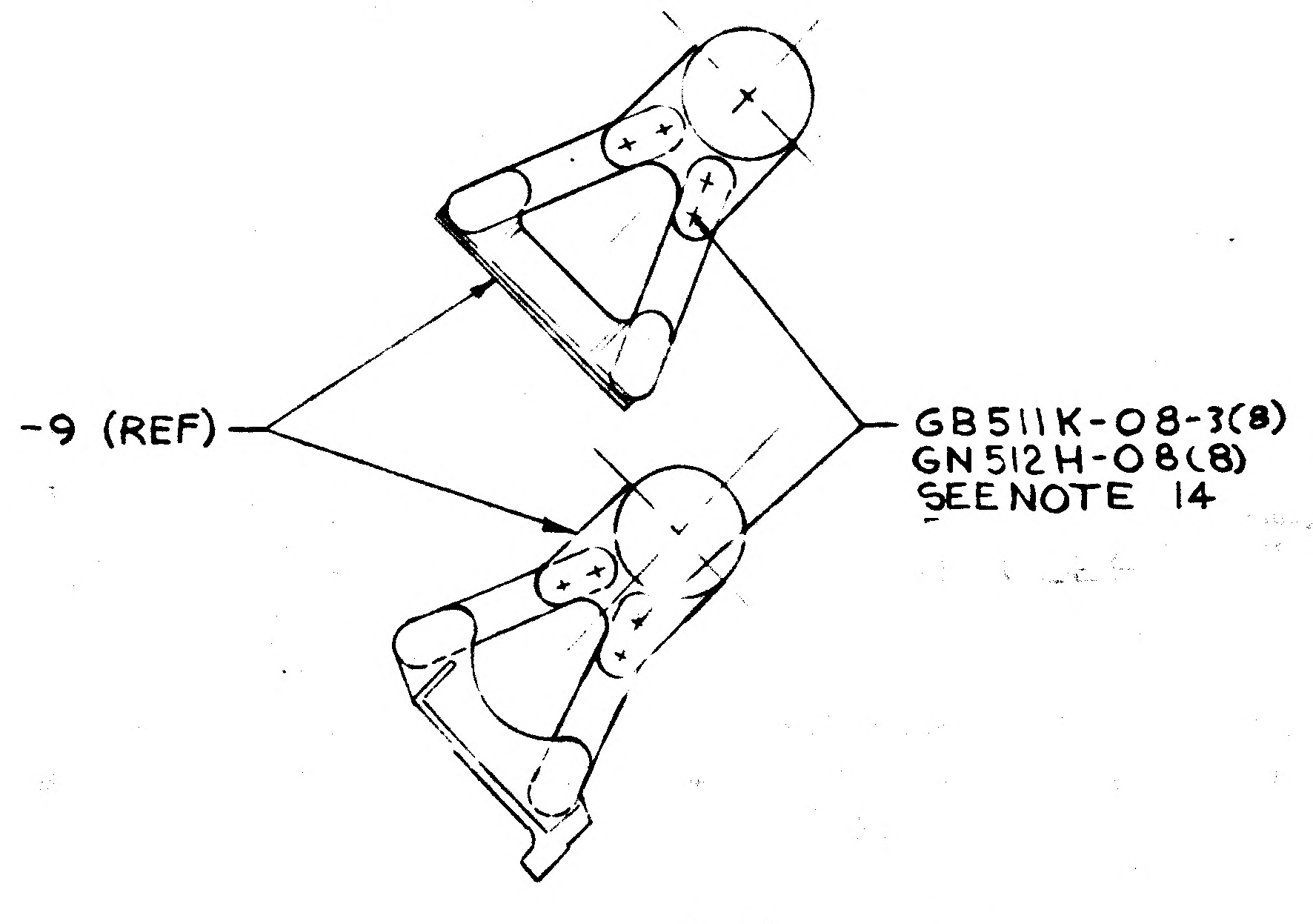
-9 (REF)
GB511K-08-3(8)
GN512H-08(8)
SEE NOTE 14

SECT. L-L B11, B13
TYP 2 PLACES

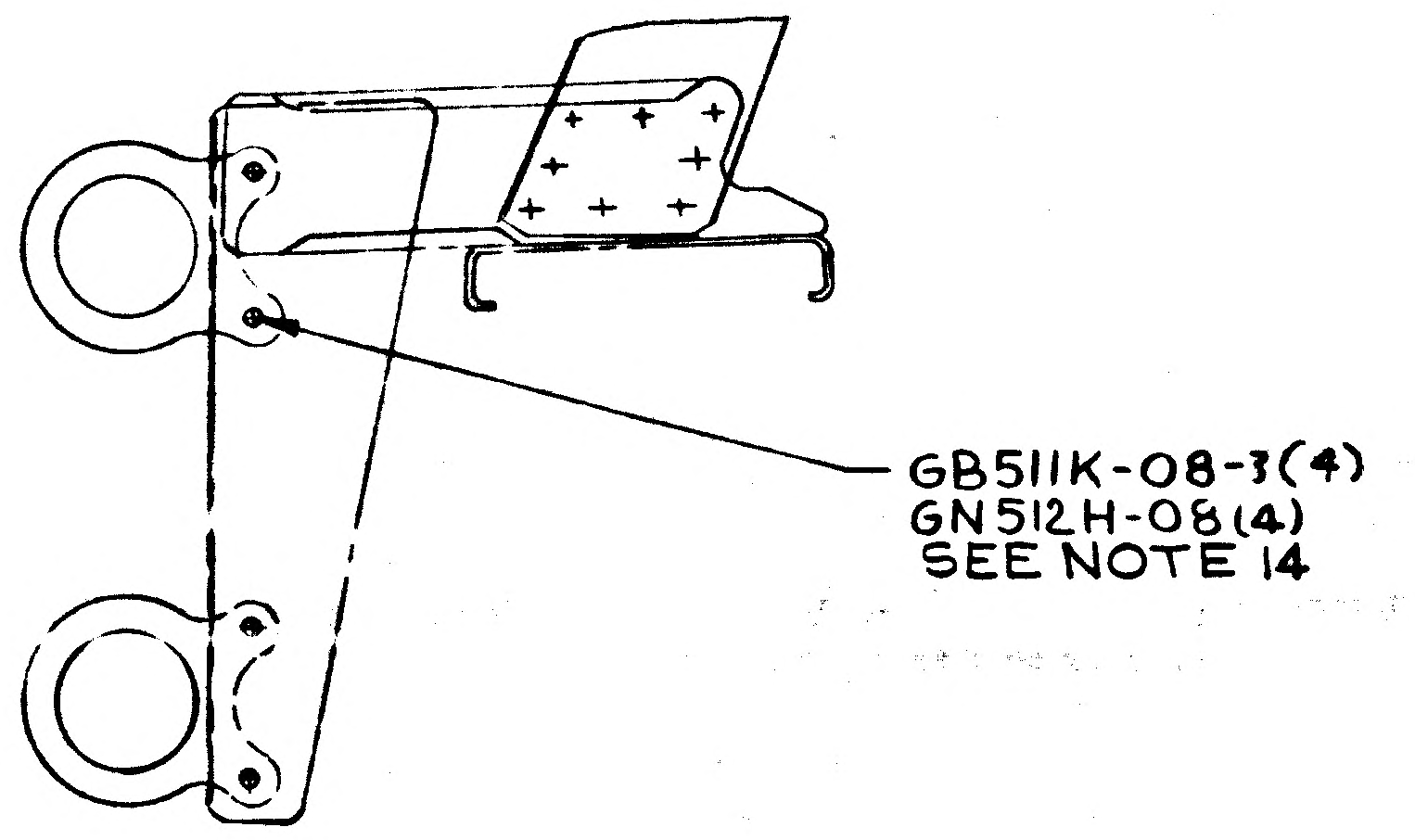
GB511K-08-3(4)
GN512H-08(4)
SEE NOTE 14

SECT. G-G A12, B13
TYP 2 PLACES

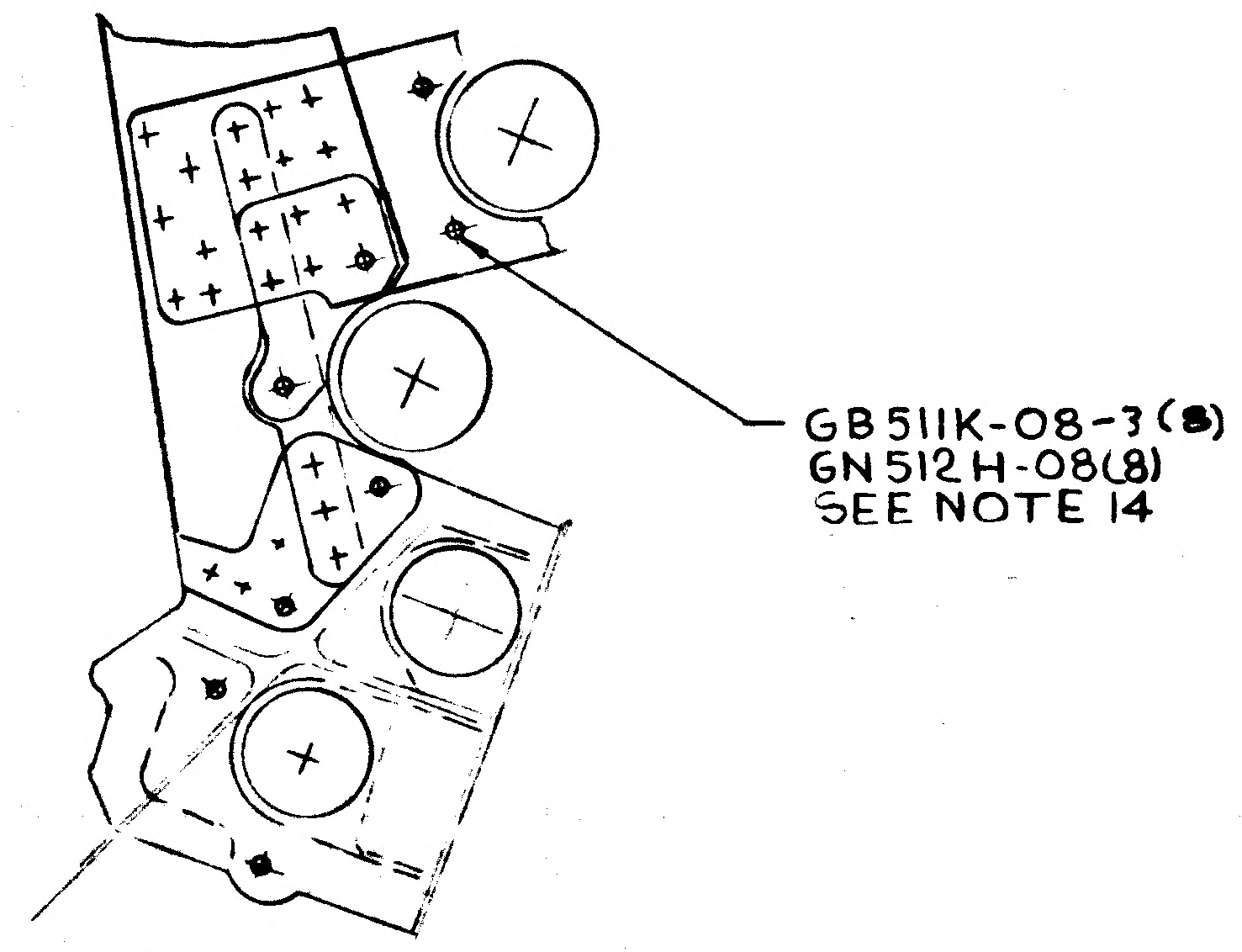
GB511K-08-3(8)
GN512H-08(8)
SEE NOTE 14

SECT. K-K B13

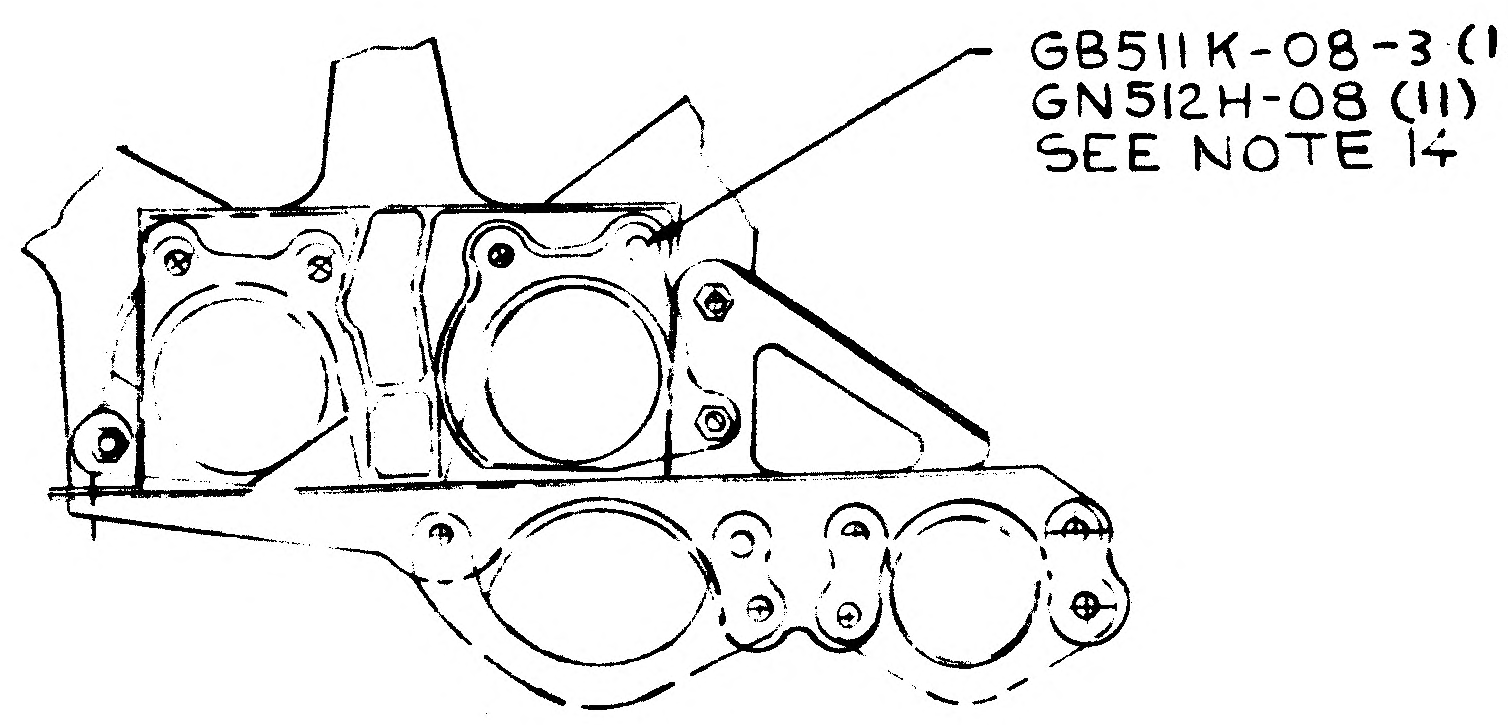
GB511K-08-3(11)
GN512H-08(11)
SEE NOTE 14

SECT. H-H B13

01/03
NAS 9-1100

CODE IDENT NO 26512
LDW280-52608
SH 5

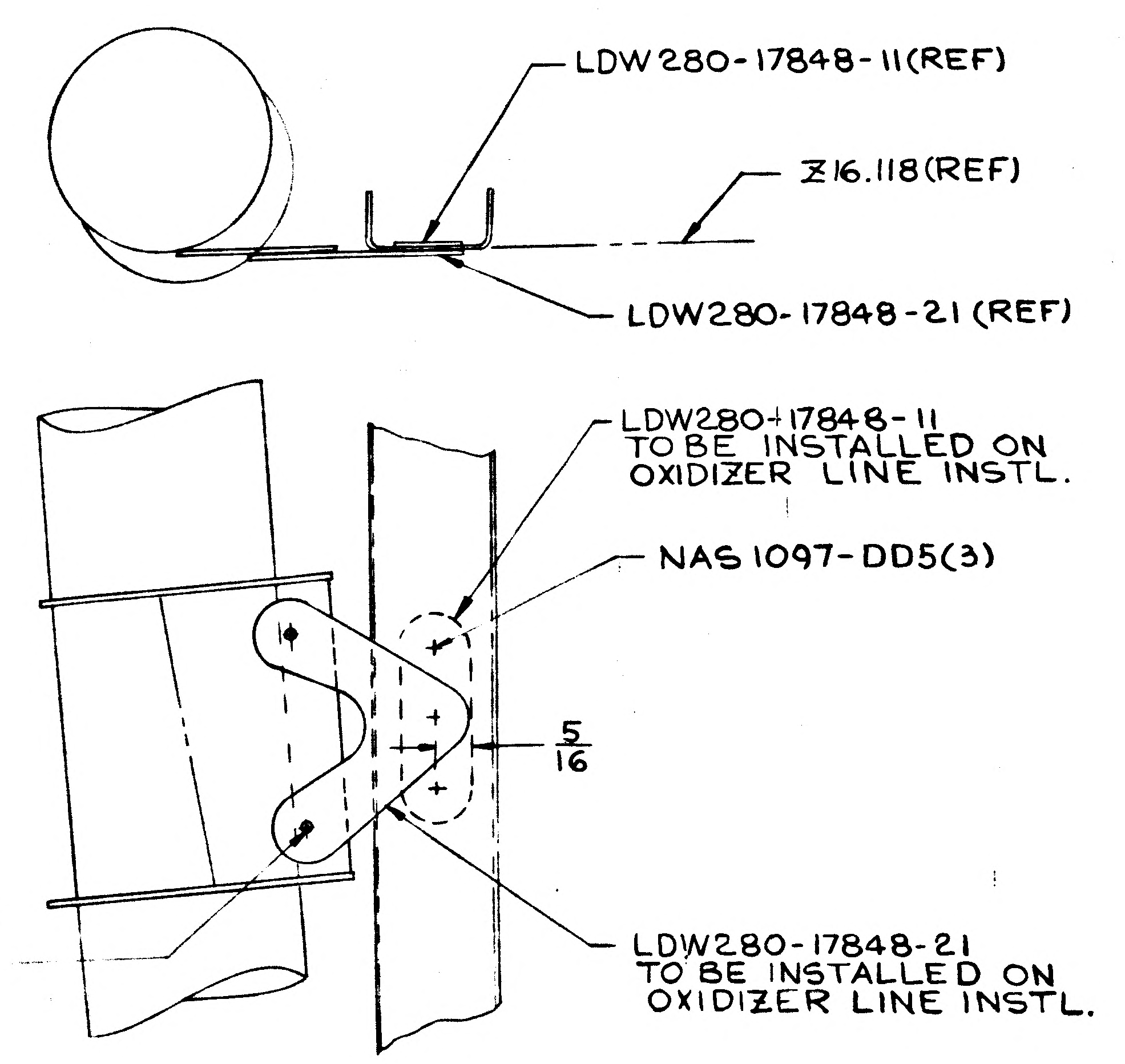
LDW280-17848-11(REF)
Z16.118(REF)
LDW280-17848-21 (REF)
LDW280-17848-11
TO BE INSTALLED ON
OXIDIZER LINE INSTL.
NAS 1097-DD5(3)
5/16
GB511K-08-3(2)
GN 512H-08(2)
SEE NOTE 14
LDW280-17848-21
TO BE INSTALLED ON
OXIDIZER LINE INSTL.

DETAIL J-J (ZONE B12)
(FULL SIZE)

08-3(6)
08(6)
TE 14

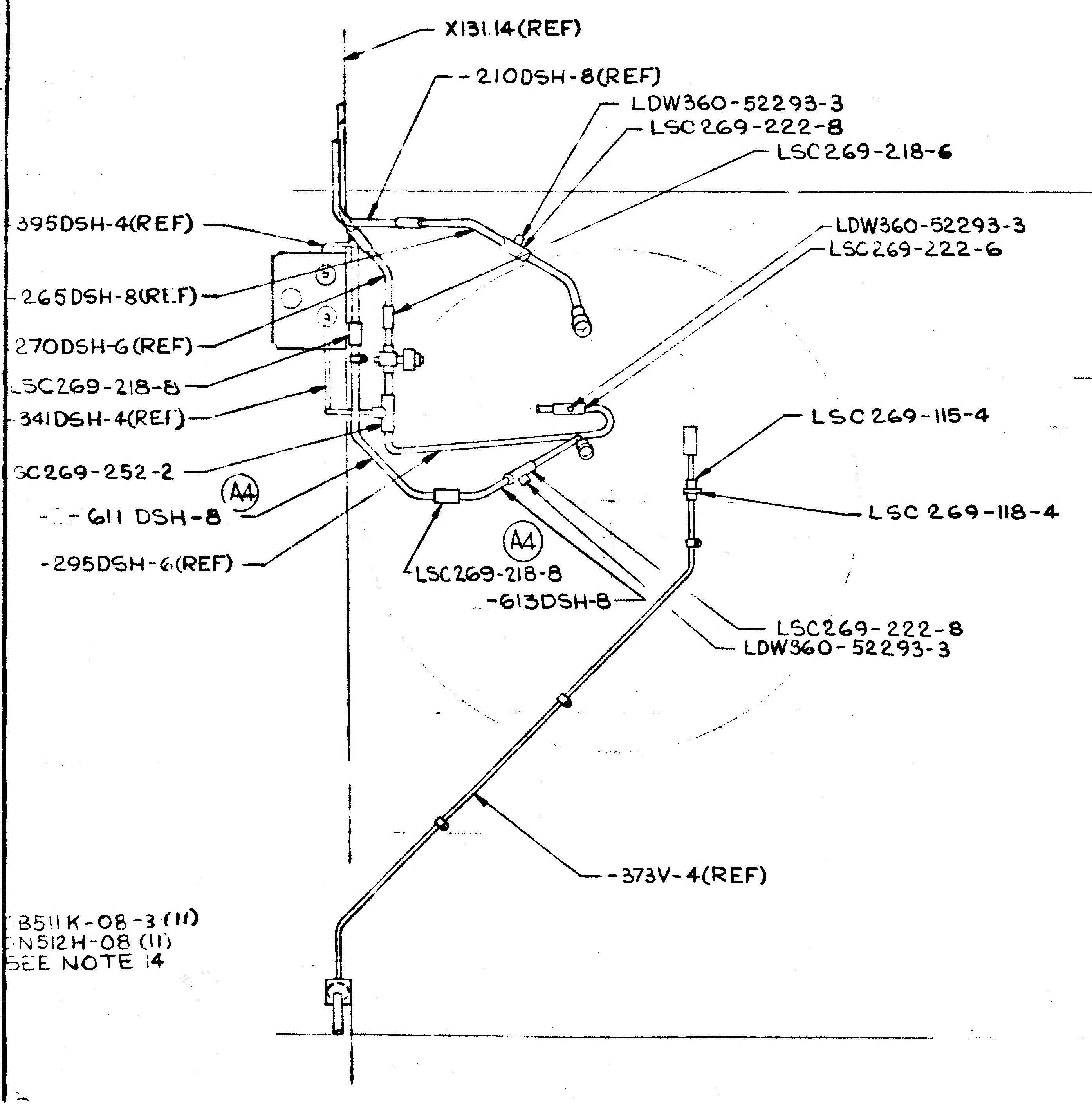
X131.14(REF)
-210DSH-8(REF)
LDW360-52293-3
LSC269-222-8
LSC269-218-6
395DSH-4(REF)
-265DSH-8(REF)
270DSH-6(REF)
LSC269-218-8
341DSH-4(REF)
LDW360-52293-3
LSC269-222-6
SC269-252-2
A4
-611 DSH-8
-295DSH-6(REF)
LSC269-218-8
A4
-613DSH-8
LSC269-115-4
LSC 269-118-4
LSC269-222-8
LDW360-52293-3
-373V-4(REF)
B511K-08-3 (11)
N512H-08 (11)
SEE NOTE 14

+Y2700(REF)

-Z8100

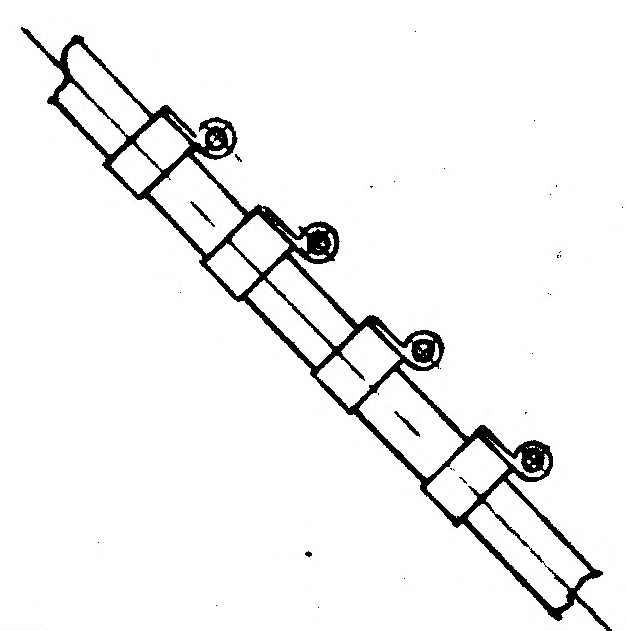

SECT. T-T A13
SCALE NONE

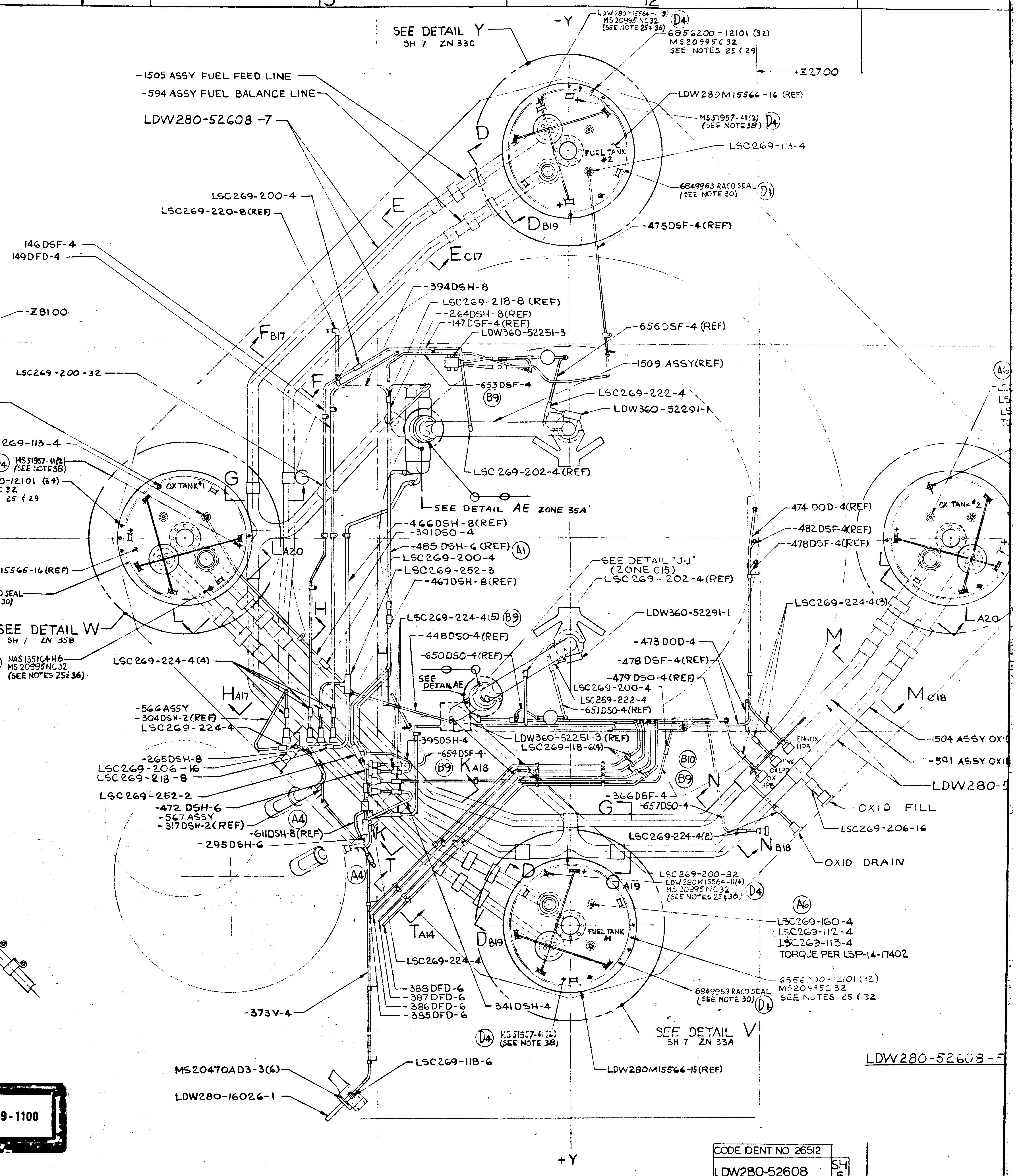
SEE DETAIL Y
SH 7 ZN 33C
-Y
LDW280M15564-11(3)
MS20995NC32
(SEE NOTE 25 & 36)
D4
6856200-12101 (32)
MS20995C32
SEE NOTES 25 & 29
+Z2700
-1505 ASSY FUEL FEED LINE
-594 ASSY FUEL BALANCE LINE
LDW280M15566-16 (REF)
MS51957-41(2)
(SEE NOTE 38)
D4
LDW280-52608-7
FUEL TANK #2
LSC269-113-4
D
6849963 RACO SEAL
(SEE NOTE 30)
D1
LSC269-200-4
LSC269-220-8(REF)
E
D B19
-475DSF-4(REF)
146DSF-4
149DFD-4
E C17
-394DSH-8
LSC269-218-8 (REF)
-264DSH-8(REF)
-147DSF-4(REF)
-656DSF-4 (REF)
LDW360-52251-3
F B17
-1509 ASSY(REF)
LSC269-200-32
F
-653DSF-4
B9
LSC269-222-4
LDW360-52291-1
D4
LDW280M15564-11(3)
MS 20995NC32
(SEE NOTES 25 & 36)
LSC269-113-4
D4
MS51957-41(2)
(SEE NOTE 38)
6856200-12101 (34)
MS20995C32
SEE NOTE 25 & 29
OX TANK #1
G
G
LSC 269-202-4(REF)
SEE DETAIL AE ZONE 35A
-Z
L A20
-466DSH-8
-391DSO-4
-485 DSH-6 (REF)
A1
LSC269-200-4
LSC269-252-3
-467DSH-8(REF)
LDW280M15565-16(REF)
D1
6849963 RACO SEAL
(SEE NOTE 30)
SEE DETAIL "J-J"
(ZONE C15)
LSC269-202-4(REF)
H
SEE DETAIL W
SH 7 ZN 35B
LSC269-224-4(5)
B9
-448DSO-4(REF)
LDW360-52291-1
-473 DOD-4
D4
NAS 1351C4H6
MS 20995NC32
(SEE NOTES 25 & 36)
LSC269-224-4(4)
-650DSO-4(REF)
SEE DETAIL AE
-478 DSF-4(REF)
-479 DSO-4(REF)
LSC269-200-4
LSC269-222-4
-651DSO-4(REF)
H A17
-566 ASSY
-304 DSH-2 (REF)
LSC269-224-4
-395DSH-4
-654DSF-4
K A18
B9
LDW360-52251-3 (REF)
LSC269-118-6(4)
B10
-265DSH-8
LSC269-206-16
LSC269-218-8
LSC269-252-2
-472 DSH-6
-567 ASSY
-317DSH-2(REF)
A4
-611DSH-8(REF)
-295DSH-6
-366DSF-4
B9
N
G
-657DSO-4
LSC269-224-4(2)
N B18
A4
L
T
T A14
D
G A19
LSC269-200-32
LDW280M15564-11(4)
MS 20995NC32
(SEE NOTES 25 & 36)
D4
A6
LSC269-160-4
LSC269-112-4
LSC269-113-4
TORQUE PER LSP-14-17402
FUEL TANK #1
D B19
LSC269-224-4
-388DFD-6
-387DFD-6
-386DFD-6
-385DFD-6
-341DSH-4
-373V-4
6856200-12101 (32)
MS20995C32
SEE NOTES 25 & 32
6849963 RACO SEAL
(SEE NOTE 30)
D1
D4
MS51957-41(2)
(SEE NOTE 38)
SEE DETAIL V
SH 7 ZN 33A
LDW280M15566-15(REF)
LSC269-118-6
MS20470AD3-3(6)
LDW280-16026-1
+Y
474 DOD-4(REF)
-482 DSF-4(REF)
-478DSF-4(REF)
OX TANK #2
L A20
LSC269-224-4(3)
M
M C18
-1504 ASSY OXI
-591 ASSY OXI
LDW280-5
ENG OX HPB
ENG OX LPD
OX HPB
OXID FILL
LSC269-206-16
OXID DRAIN
A6
LDW280-52608-5

02/03 NAS 9-1100

CODE IDENT NO 26512
LDW280-52608
SH 5

CODE IDENT NO 26512
LDW280-52608
SH 5

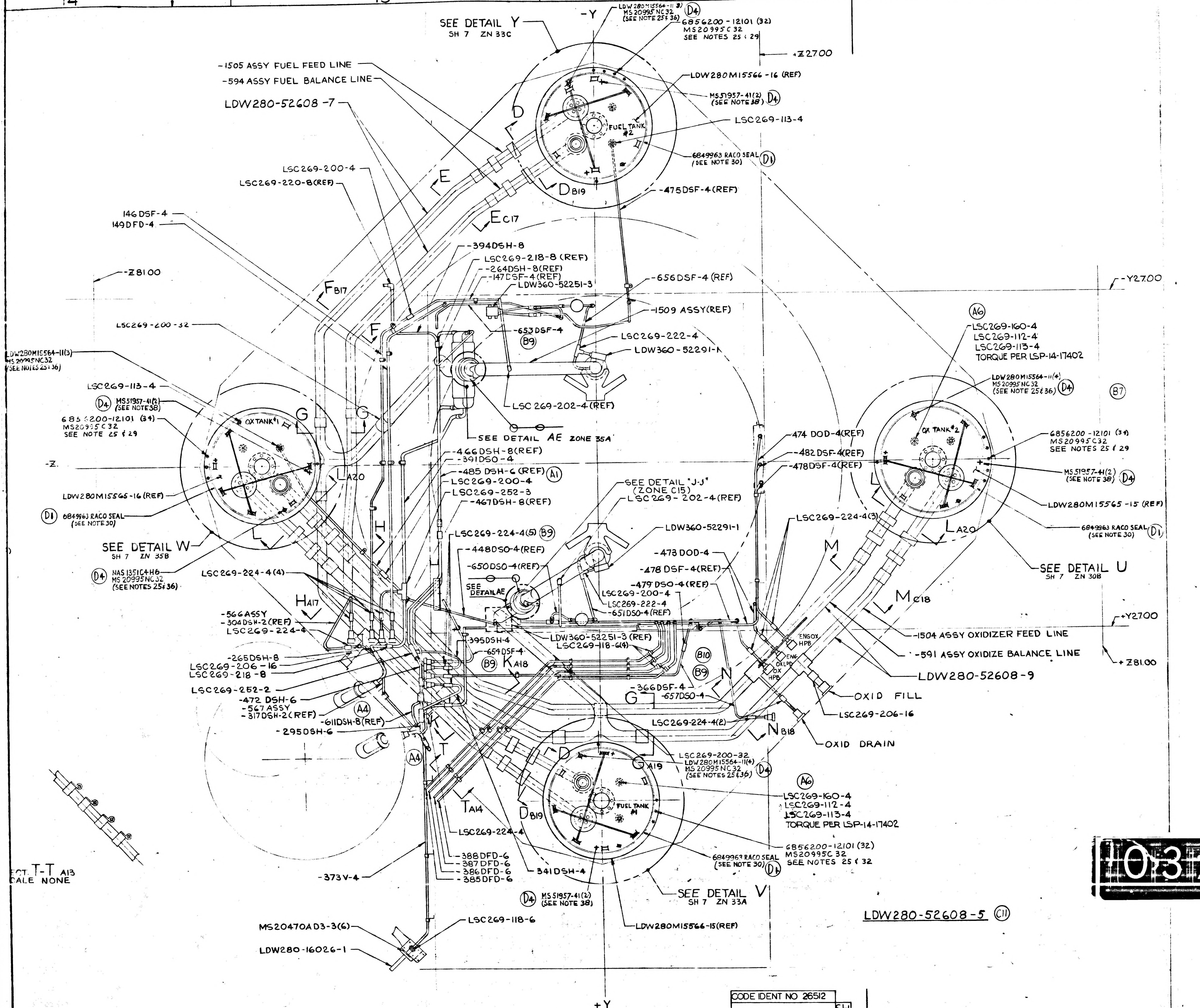
14
13
12
11
SEE DETAIL Y
SH 7 ZN 33C
-Y
LDW280M15564-11(3)
MS20995NC32
(SEE NOTE 25 & 36)
D4
6856200-12101 (32)
MS20995C32
SEE NOTES 25 & 29
+Z2700
-1505 ASSY FUEL FEED LINE
-594 ASSY FUEL BALANCE LINE
LDW280-52608-7
LDW280M15566-16 (REF)
MS51957-41(2)
(SEE NOTE 38)
D4
LSC269-113-4
FUEL TANK #2
6849963 RACO SEAL
(SEE NOTE 30)
D1
D
E
D B19
LSC269-200-4
LSC269-220-8(REF)
-475DSF-4(REF)
146DSF-4
149DFD-4
E C17
-394DSH-8
LSC269-218-8 (REF)
-264DSH-8(REF)
-147DSF-4(REF)
LDW360-52251-3
-Z81.00
-656DSF-4 (REF)
F B17
-1509 ASSY(REF)
LSC269-200-32
F
-653DSF-4
B9
LSC269-222-4
LDW360-52291-1
LDW280M15564-11(3)
MS20995NC32
(SEE NOTES 25 & 36)
LSC269-113-4
D4
MS51957-41(2)
(SEE NOTE 38)
6856200-12101 (34)
MS20995C32
SEE NOTE 25 & 29
G
OX TANK #1
G
LSC 269-202-4(REF)
SEE DETAIL AE ZONE 35A
-Z.
L A20
-466DSH-8(REF)
-391DSO-4
-485 DSH-6 (REF)
A1
LSC269-200-4
LSC269-252-3
-467DSH-8(REF)
LDW280M15565-16(REF)
D1
6849963 RACO SEAL
(SEE NOTE 30)
H
L
SEE DETAIL W
SH 7 ZN 35B
D4
NAS1351C4H6
MS20995NC32
(SEE NOTES 25 & 36)
LSC269-224-4(4)
LSC269-224-4(5)
B9
-448DSO-4(REF)
-650DSO-4(REF)
SEE DETAIL AE
SEE DETAIL "J-J"
(ZONE C15)
LSC269-202-4(REF)
LDW360-52291-1
-473DOD-4
-478DSF-4(REF)
-479DSO-4(REF)
LSC269-200-4
LSC269-222-4
-651DSO-4(REF)
-474DOD-4(REF)
-482DSF-4(REF)
-478DSF-4(REF)
-Y27.00
A6
LSC269-160-4
LSC269-112-4
LSC269-113-4
TORQUE PER LSP-14-17402
LDW280M15564-11(4)
MS20995NC32
(SEE NOTE 25 & 36)
D4
B7
OX TANK #2
6856200-12101 (34)
MS20995C32
SEE NOTES 25 & 29
MS51957-41(2)
(SEE NOTE 38)
D4
LDW280M15565-15 (REF)
6849963 RACO SEAL
(SEE NOTE 30)
D1
L A20
LSC269-224-4(3)
M
SEE DETAIL U
SH 7 ZN 30B
M C18
H A17
-566ASSY
-304DSH-2(REF)
LSC269-224-4
-395DSH-4
LDW360-52251-3 (REF)
LSC269-118-6(4)
+Y27.00
-1504 ASSY OXIDIZER FEED LINE
-591 ASSY OXIDIZE BALANCE LINE
+Z81.00
ENG OX HPB
ENG OX LPD
OX HPB
-265DSH-8
LSC269-206-16
LSC269-218-8
-654DSF-4
B9
K A18
B10
B9
N
LDW280-52608-9
LSC269-252-2
-472DSH-6
-567ASSY
-317DSH-2(REF)
A4
-611DSH-8(REF)
-366DSF-4
G
-657DSO-4
OXID FILL
LSC269-206-16
-295DSH-6
LSC269-224-4(2)
N B18
OXID DRAIN
A4
T
D
G A19
LSC269-200-32
LDW280M15564-11(4)
MS20995NC32
(SEE NOTES 25 & 36)
D4
A6
LSC269-160-4
LSC269-112-4
LSC269-113-4
TORQUE PER LSP-14-17402
T A14
D B19
FUEL TANK #1
LSC269-224-4
-388DFD-6
-387DFD-6
-386DFD-6
-385DFD-6
-341DSH-4
6856200-12101 (32)
MS20995C32
SEE NOTES 25 & 32
6849963 RACO SEAL
(SEE NOTE 30)
D1
SECT. T-T A13
SCALE NONE
-373V-4
D4
MS51957-41(2)
(SEE NOTE 38)
SEE DETAIL V
SH 7 ZN 33A
LDW280M15566-15(REF)
LDW280-52608-5
C11
MS20470AD3-3(6)
LSC269-118-6
LDW280-16026-1
+Y
14
13
12
11

10

C

B

A

MANUFACTURING OPERATIONS

UNLESS OTHERWISE SPECIFIED
NOTES CHECKED ✓ APPLY TO THIS DWG.

PART NUMBER
AND ALL OTHER MARKINGS
IN REGION MARKED ⊠
USE BOTH SIDES IF NECESSARY.

FILLET AND INSIDE CORNER
RADII TOLERANCES
.016R TO .062R ± .010
.063R TO .250R ± .015
OVER .250R ± .030

DEPTH SHOWN FOR TAPPED
HOLES IS FULL THDS. 2-3 IMP THDS.
BEYOND PERMISSIBLE.

EXTERNAL THREAD LENGTH
SHOWN INCLUDES
2 IMPERFECT THREADS MAX.

DO NOT CADMIUM PLATE & PAINT
HOLES OR SURFACES MARKED
WITH DOUBLE ASTERISK.

MISMATCH STEP OF ± .005
PERMISSIBLE DUE TO CHANGE
OF CUTTERS AT INSIDE
INTERSECTING SURFACES.

DIAMETERS MARKED
MUST BE CONCENTRIC WITHIN
FULL INDICATOR
READING

HOLES MUST BE KEPT FREE OF
CHROME PLATING SOLUTION.

ALL DIMENSIONS SHOWN TO BE MET
AFTER CADMIUM PLATING.
THICKNESS OF PLATE .0003 MIN.
TO .0005 MAX. MIN. THICKNESS TO
BE .0002 ON THREADED AREAS.
NO ALLOWANCE FOR PLATING IN
HOLES

125 √ SURFACE ROUGHNESS
INCLUDING REAMED HOLES
PER MIL-STD-10

200 √ FOR ALL DRILLED HOLES

REMOVE ALL BURRS.
BREAK ALL EDGES .015-.031

INSPECTION INFORMATION
MINIMUM PERMISSIBLE
AVERAGE EDGE DISTANCE
MARKED IS

SYMBOL √ DENOTES SURFACE
TO BE MACHINED

UNLESS OTHERWISE SPECIFIED
TOLERANCE ON FLANGES IS ± 1/32

LENGTHS OF AN, NAS & MS AL ALY
RIVETS SHORTER THAN 1 INCH ARE
NOT SPECIFIED.

TOLERANCE ON LOFTED
DELINEATIONS IS

DWG SIZE 34 X 110

PRINTING INFO ONLY
FULL SIZE SHEET AREA (36 X 120)= 30.0 SQ. FT.
1/2 SIZE SHEET AREA (1/4 OF FULL)= 7.5 SQ. FT.

PRINT TRIM LINE

LDW280-52608 D

LDW280-52608 D

103/03

NAS 9-1100

CODE IDENT NO 26512
LDW280-52608
SH 5

GRUMMAN AIRCRAFT ENGRG CORP., BETHPAGE, L. I., NEW YORK			
SIZE J	CODE IDENT NO. 26512	LDW280-52608	D
SCALE		SHEET 5.00	
LM	MODEL OR END ITEM		

(D)

10

36 35 34 33 32

01/02 **NAS 9-1100**

C

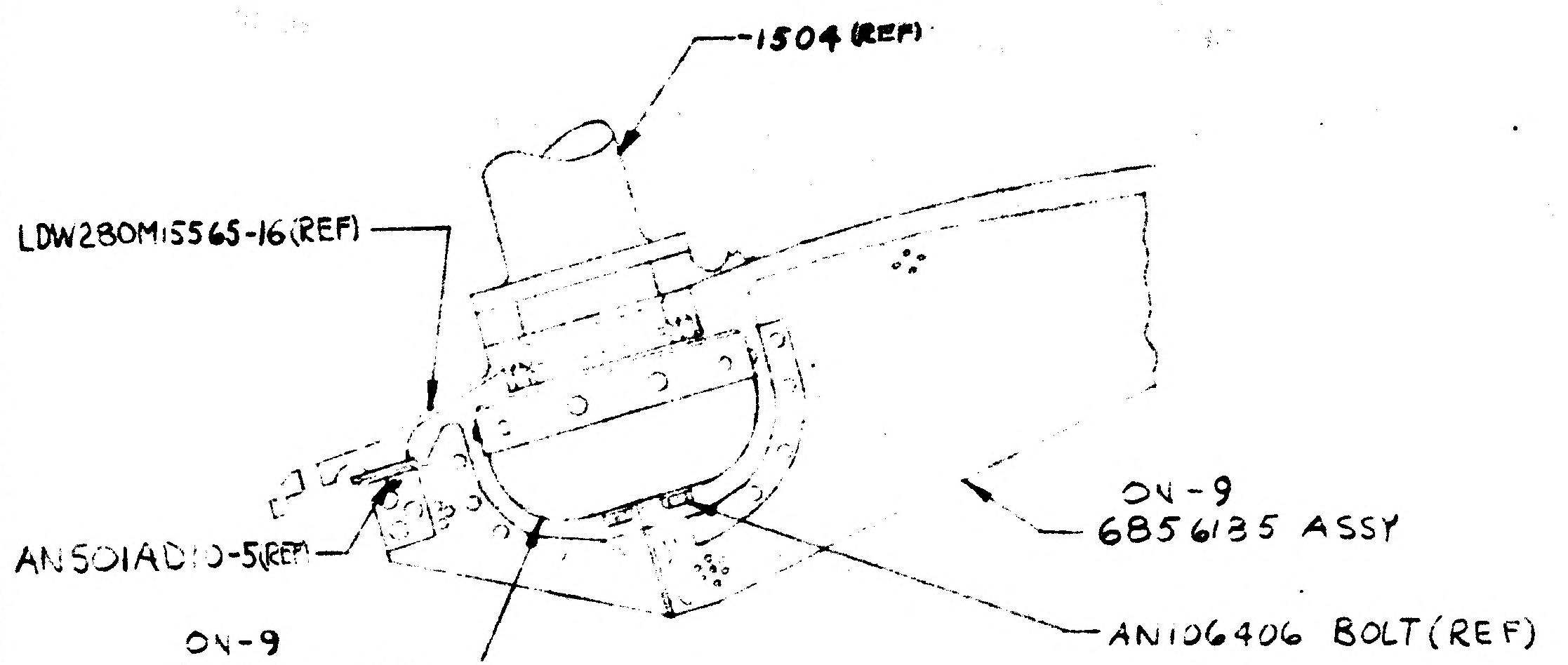
-1504 (REF)
LDW280M15565-16 (REF)
ON-9
6856135 ASSY
AN501AD10-5 (REF)
ON-9
6856183 ASSY
AN106406 BOLT (REF)

SECTION AD-AD
ZONE 36B

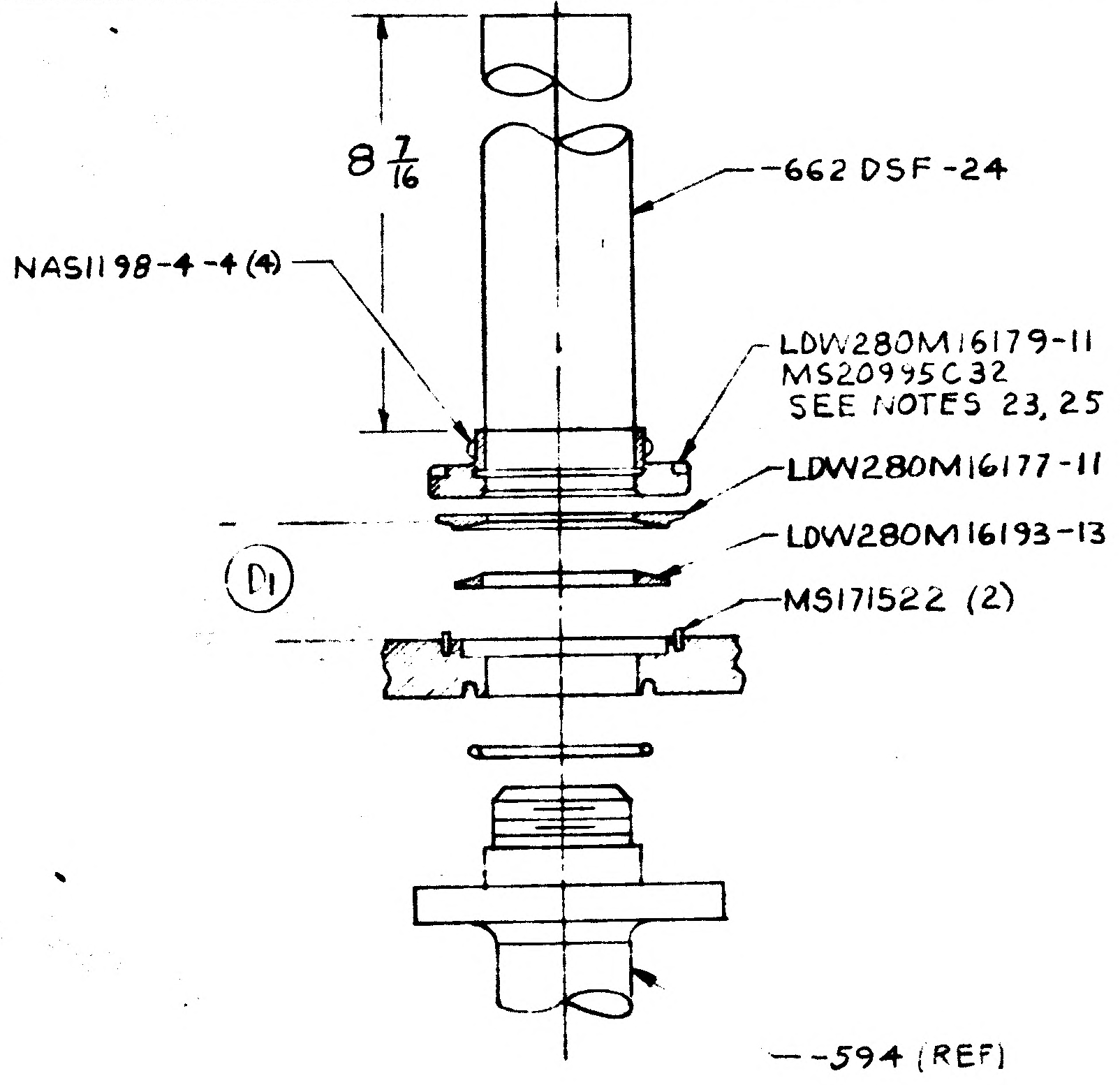
8 7/16
-662 DSF-24
NAS1198-4-4 (4)
LDW280M16179-11
MS20995C32
SEE NOTES 23, 25 & 26
LDW280M16177-11
LDW280M16193-13
MS171522 (2)
D1
-594 (REF)

DETAIL AJ
TYPICAL 2 PLACES ON -7
(ZONE 33A & 33C)
NO SCALE

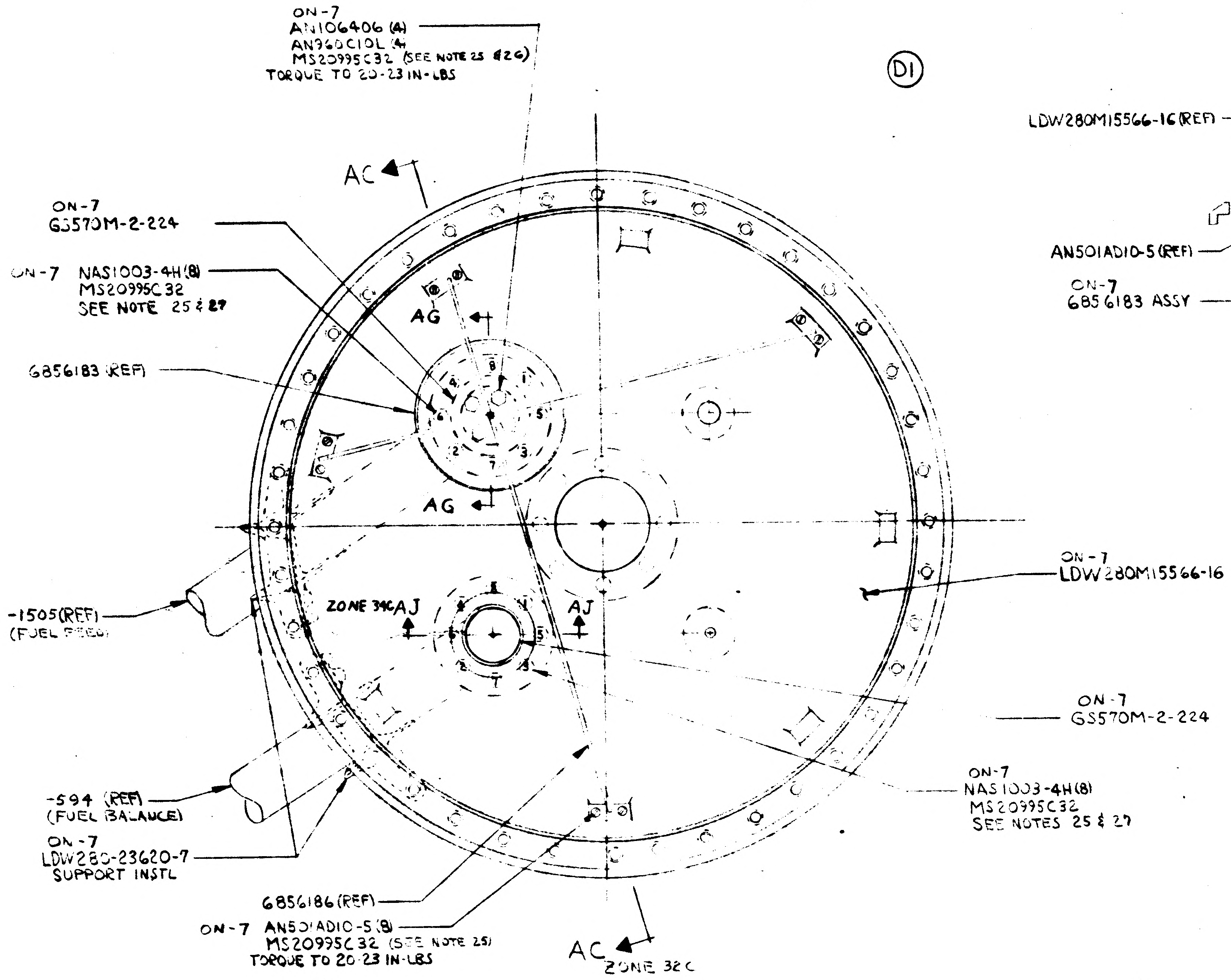
ON-7
AN106406 (4)
AN960C10L (4)
MS20995C32 (SEE NOTE 25 & 26)
TORQUE TO 20-23 IN-LBS
D1
AC
ON-7
GS570M-2-224
ON-7 NAS1003-4H (8)
MS20995C32
SEE NOTE 25 & 27
AG
6856183 (REF)
AG
-1505 (REF)
(FUEL FEED)
ZONE 34C AJ
AJ
ON-7
LDW280M15566-16 COVER (-Y)
ON-7
GS570M-2-224
-594 (REF)
(FUEL BALANCE)
ON-7
LDW280-23620-7
SUPPORT INSTL
ON-7
NAS1003-4H (8)
MS20995C32
SEE NOTES 25 & 27
6856186 (REF)
ON-7 AN501AD10-5 (8)
MS20995C32 (SEE NOTE 25)
TORQUE TO 20-23 IN-LBS
AC
ZONE 32C

DETAIL Y (-Y)
(VIEW LOOKING DOWN)
(SH 5.00 ZONE 2C)
HALF SIZE

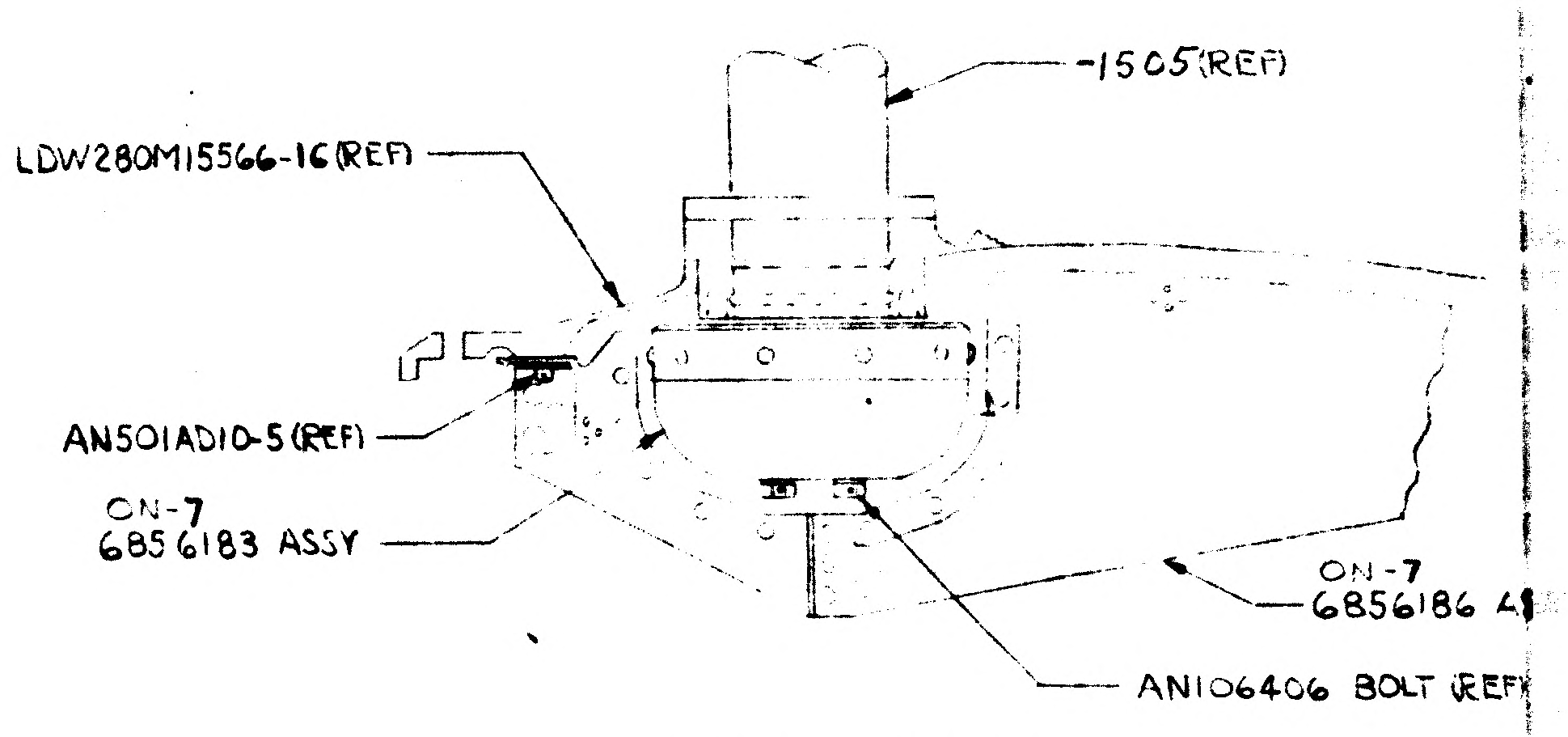
-1505 (REF)
LDW280M15566-16 (REF)
AN501AD10-5 (REF)
ON-7
6856183 ASSY
ON-7
6856186 A
AN106406 BOLT (REF)

SECTION AC-AC
(ZONE 33B)

B

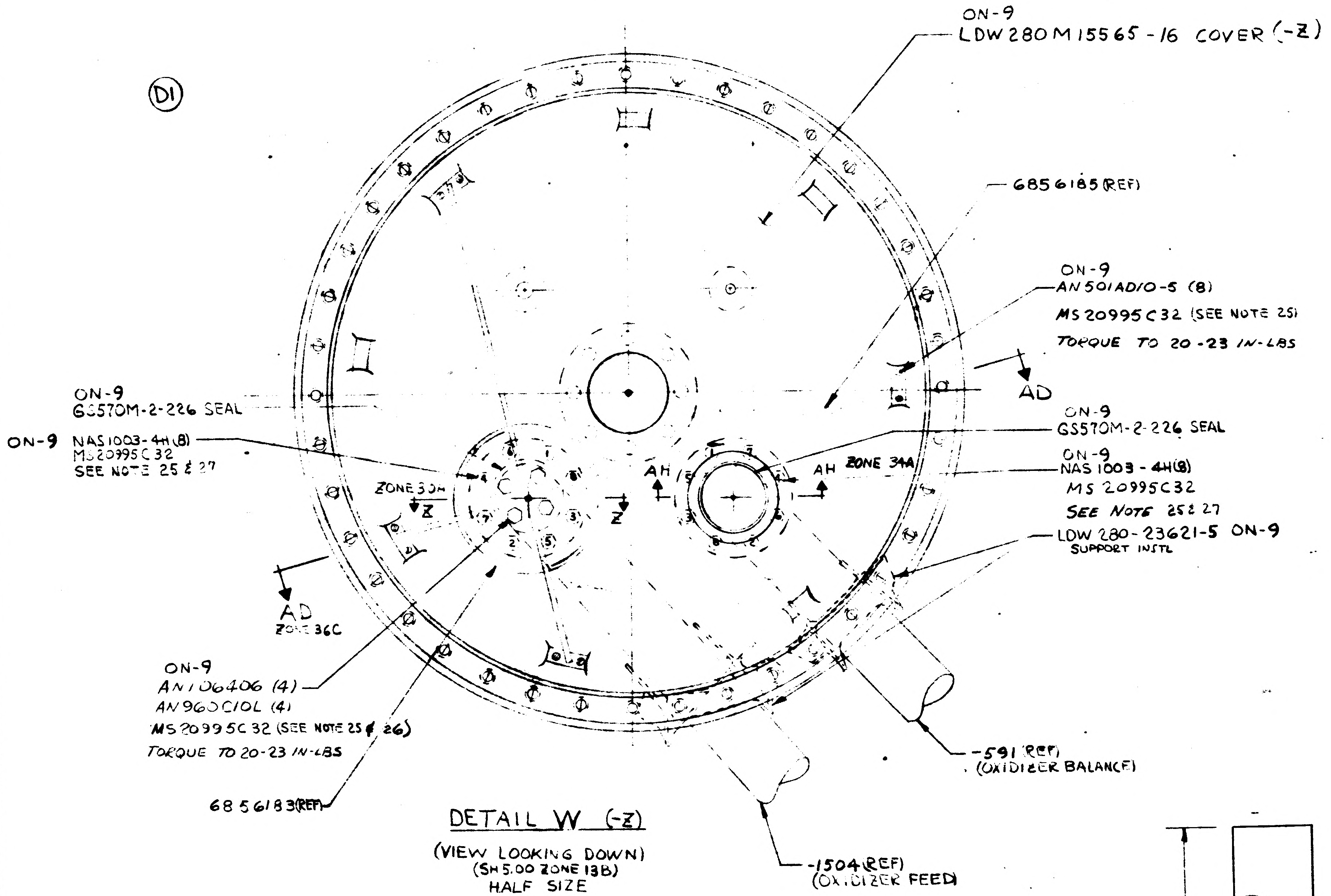
ON-9
LDW280M15565-16 COVER (-Z)
D1
6856185 (REF)
ON-9
AN501AD10-5 (8)
MS20995C32 (SEE NOTE 25)
TORQUE TO 20-23 IN-LBS
AD
ON-9
GS570M-2-226 SEAL
ON-9 NAS1003-4H (8)
MS20995C32
SEE NOTE 25 & 27
ZONE 33A
Z
Z
AH
AH
ZONE 34A
ON-9
GS570M-2-226 SEAL
ON-9
NAS1003-4H (8)
MS20995C32
SEE NOTE 25 & 27
LDW280-23621-5 ON-9
SUPPORT INSTL
AD
ZONE 36C
ON-9
AN106406 (4)
AN960C10L (4)
MS20995C32 (SEE NOTE 25 & 26)
TORQUE TO 20-23 IN-LBS
6856183 (REF)
-591 (REF)
(OXIDIZER BALANCE)
-1504 (REF)
(OXIDIZER FEED)

DETAIL W (-Z)
(VIEW LOOKING DOWN)
(SH 5.00 ZONE 13B)
HALF SIZE

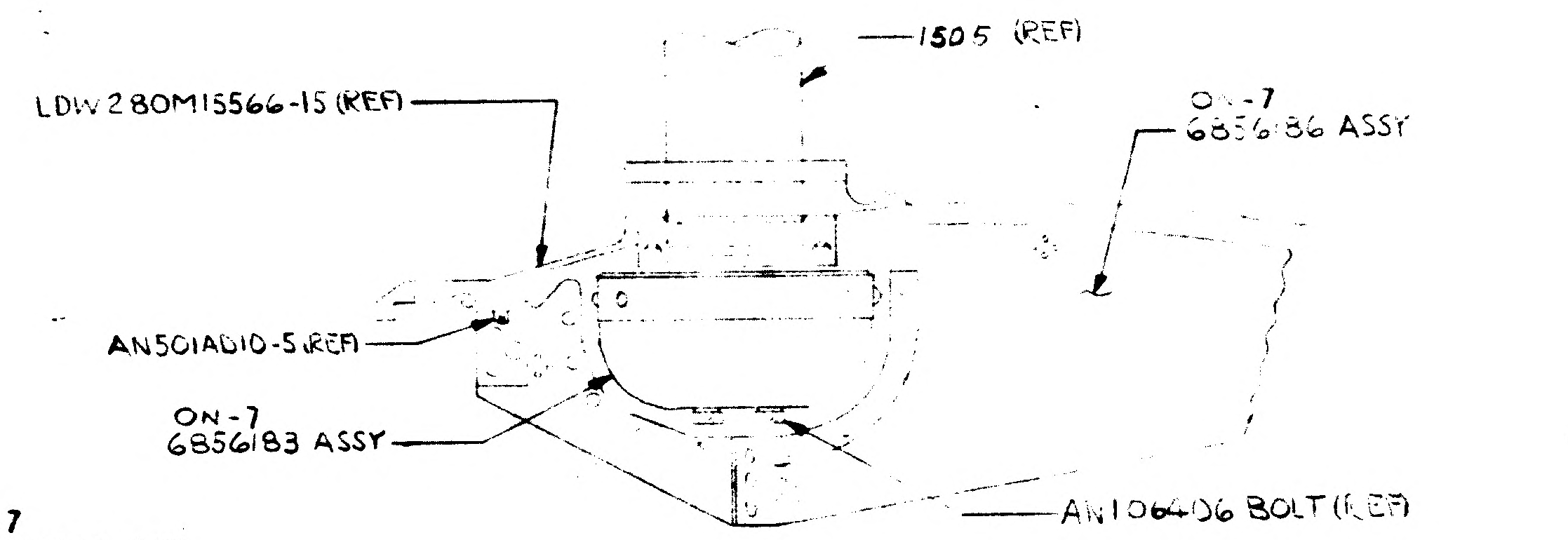
-1505 (REF)
LDW280M15566-15 (REF)
ON-7
6856186 ASSY
AN501AD10-5 (REF)
ON-7
6856183 ASSY
AN106406 BOLT (REF)

SECTION AA-AA
(ZONE 33A)

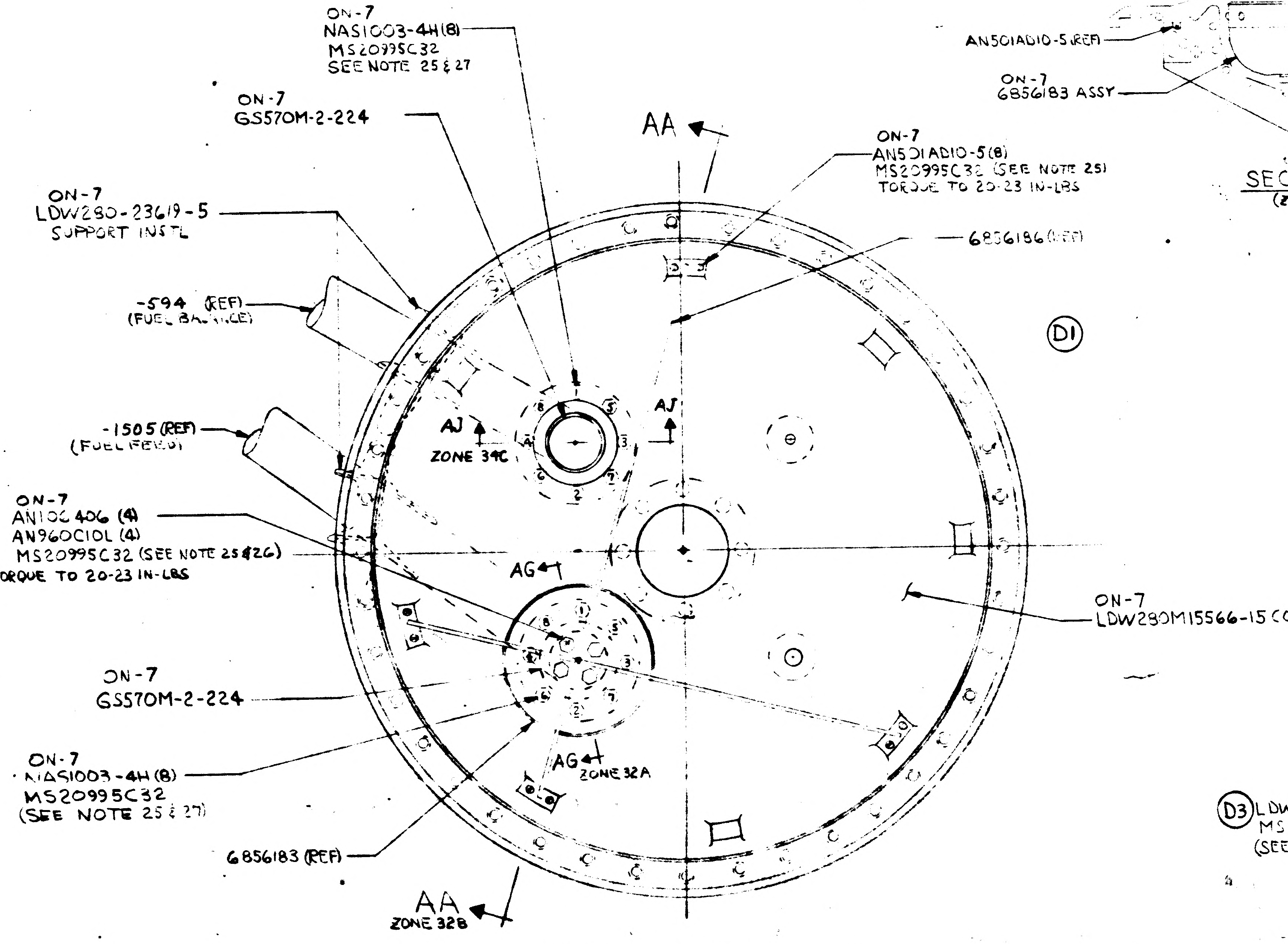
ON-7
NAS1003-4H (8)
MS20995C32
SEE NOTE 25 & 27
ON-7
GS570M-2-224
AA
ON-7
AN501AD10-5 (8)
MS20995C32 (SEE NOTE 25)
TORQUE TO 20-23 IN-LBS
ON-7
LDW280-23619-5
SUPPORT INSTL
6856186 (REF)
-594 (REF)
(FUEL BALANCE)
D1
-1505 (REF)
(FUEL FEED)
AJ
ZONE 34C
AJ
ON-7
AN106406 (4)
AN960C10L (4)
MS20995C32 (SEE NOTE 25 & 26)
TORQUE TO 20-23 IN-LBS
AG
ON-7
LDW280M15566-15 COVER (+Y)
ON-7
GS570M-2-224
AG
ZONE 32A
ON-7
NAS1003-4H (8)
MS20995C32
(SEE NOTE 25 & 27)
6856183 (REF)
AA
ZONE 32B

DETAIL V (+Y)
VIEW LOOKING DOWN
(SH 5.00 ZONE 12A)
HALF SIZE

A

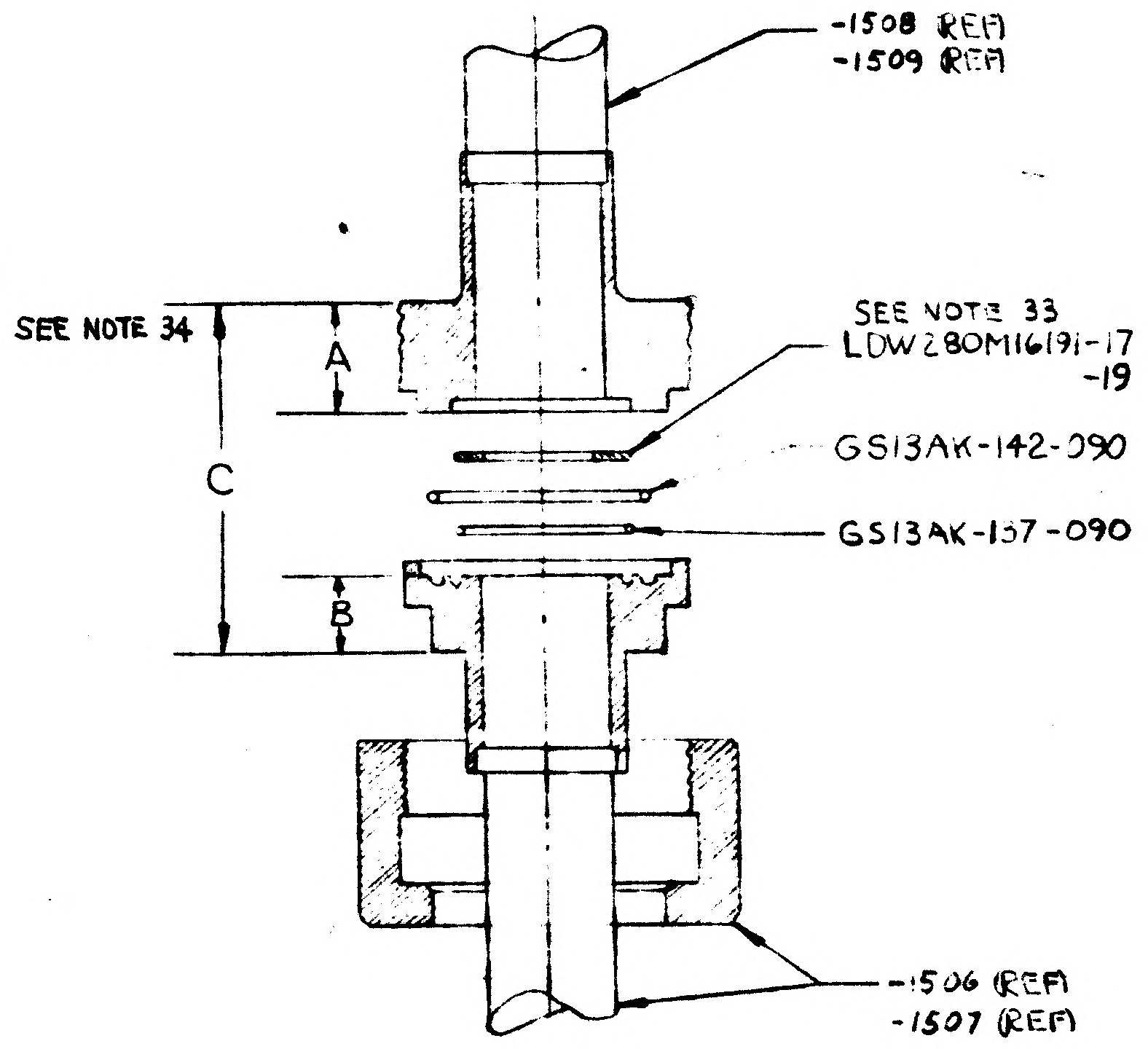
-1508 (REF)
-1509 (REF)
SEE NOTE 34
A
C
B
SEE NOTE 33
LDW280M16191-17 ON-13
-19 ON-15
GS13AK-142-090
GS13AK-137-090
-1506 (REF)
-1507 (REF)

DETAIL AE
(TYPICAL 2 PLACES ON -13 & -15)
(SH 5.00 ZONE 13A & 13C)
NO SCALE

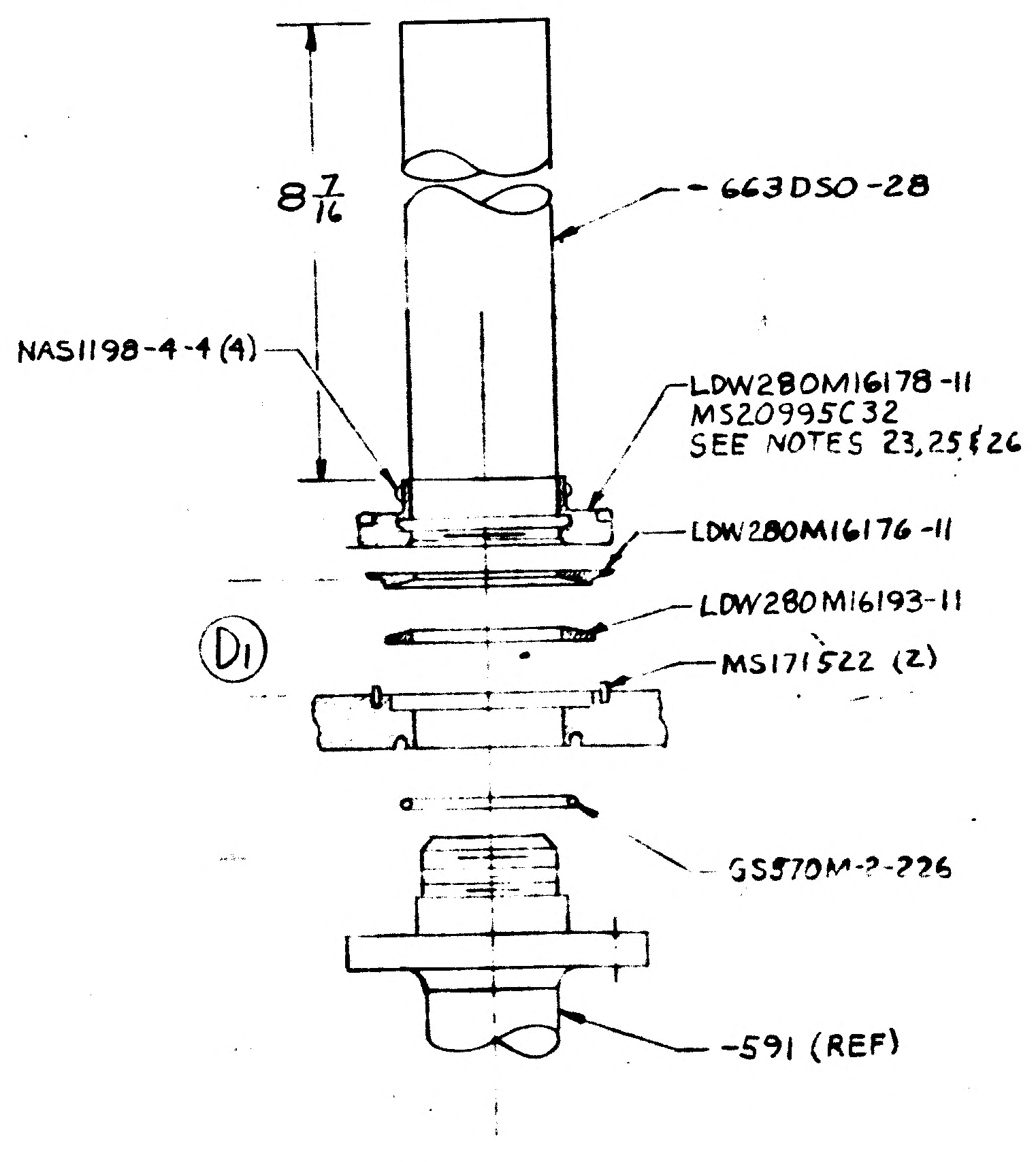
8 7/16
-663DSO-28
NAS1198-4-4 (4)
LDW280M16178-11
MS20995C32
SEE NOTES 23, 25 & 26
LDW280M16176-11
LDW280M16193-11
MS171522 (2)
D1
GS570M-2-226
-591 (REF)

DETAIL AH
(TYPICAL 2 PLACES ON -9)
(ZONE 35B & 31B)
NO SCALE

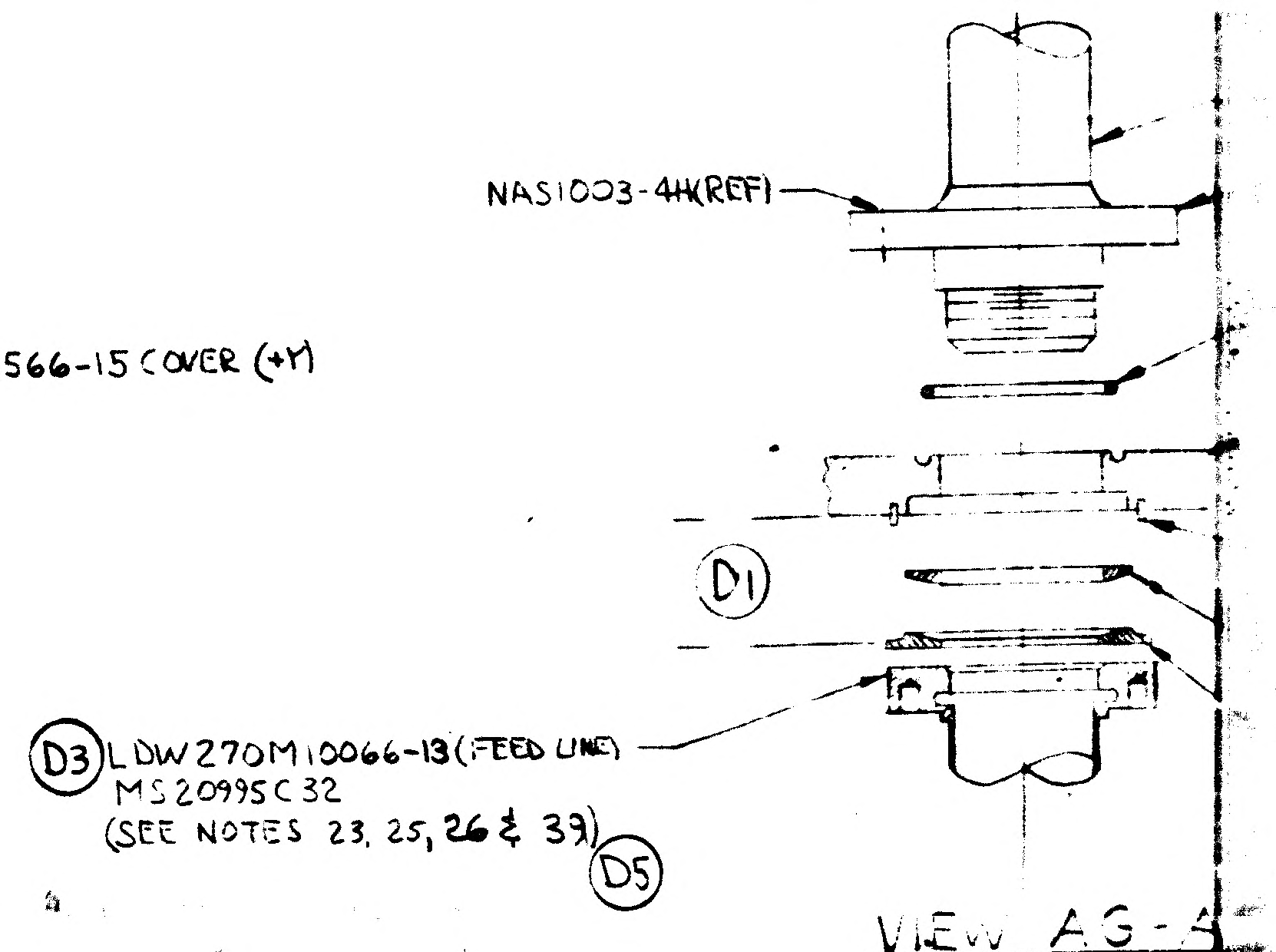
NAS1003-4H (REF)
D1
D3 LDW270M10066-13 (FEED LINE)
MS20995C32
(SEE NOTES 23, 25, 26 & 39)
D5

VIEW AG-A
(TYP 2 PLACES ON -7)
(ZONE 31A & 31C)

TYPICAL SECT THROUGH F
FUEL +Y, -Y TAN
NO SCALE

36 35 34 33 32

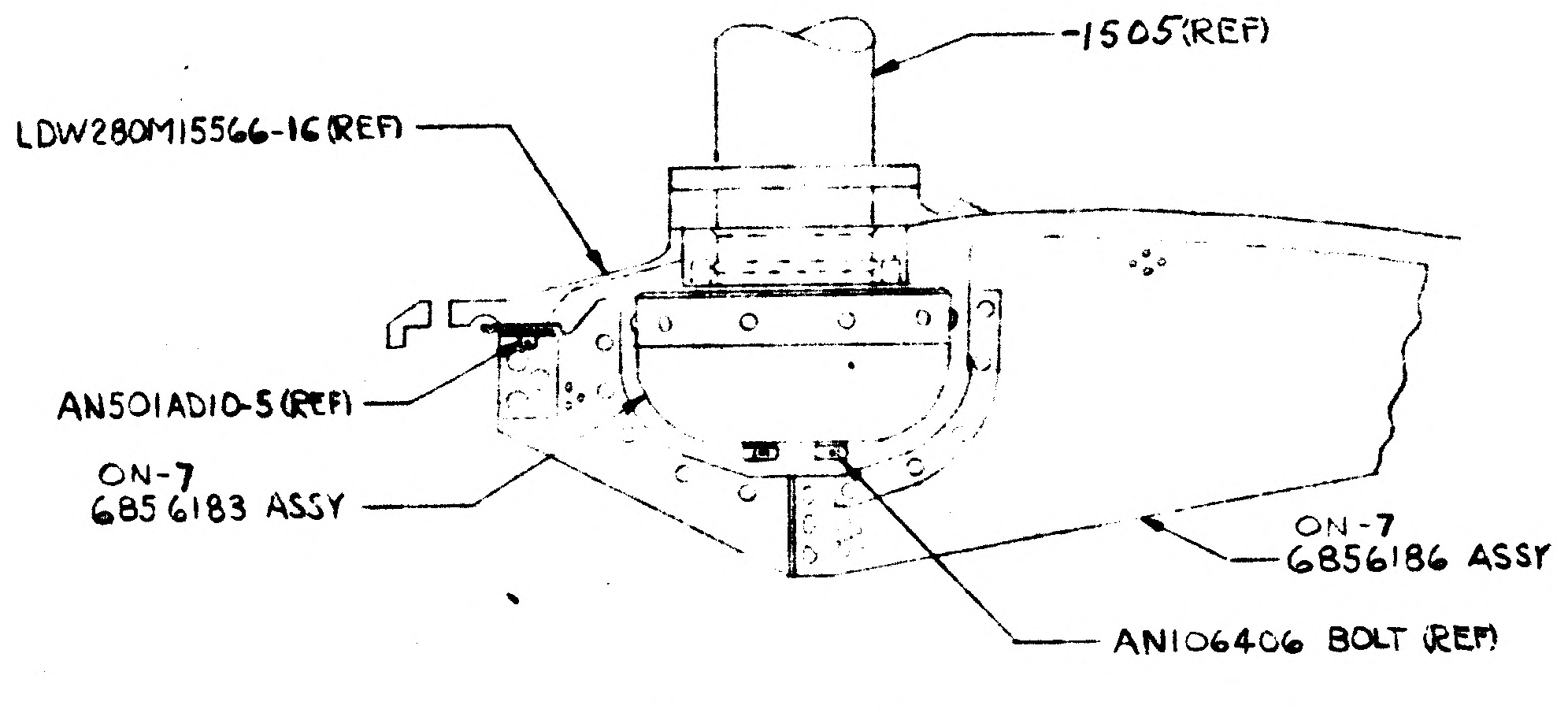

(D1)
-1505 (REF)
LDW280M15566-16 (REF)
AN501AD10-5 (REF)
ON-7
6856183 ASSY
ON-7
6856186 ASSY
AN106406 BOLT (REF)

SECTION AC-AC
(ZONE 33B)

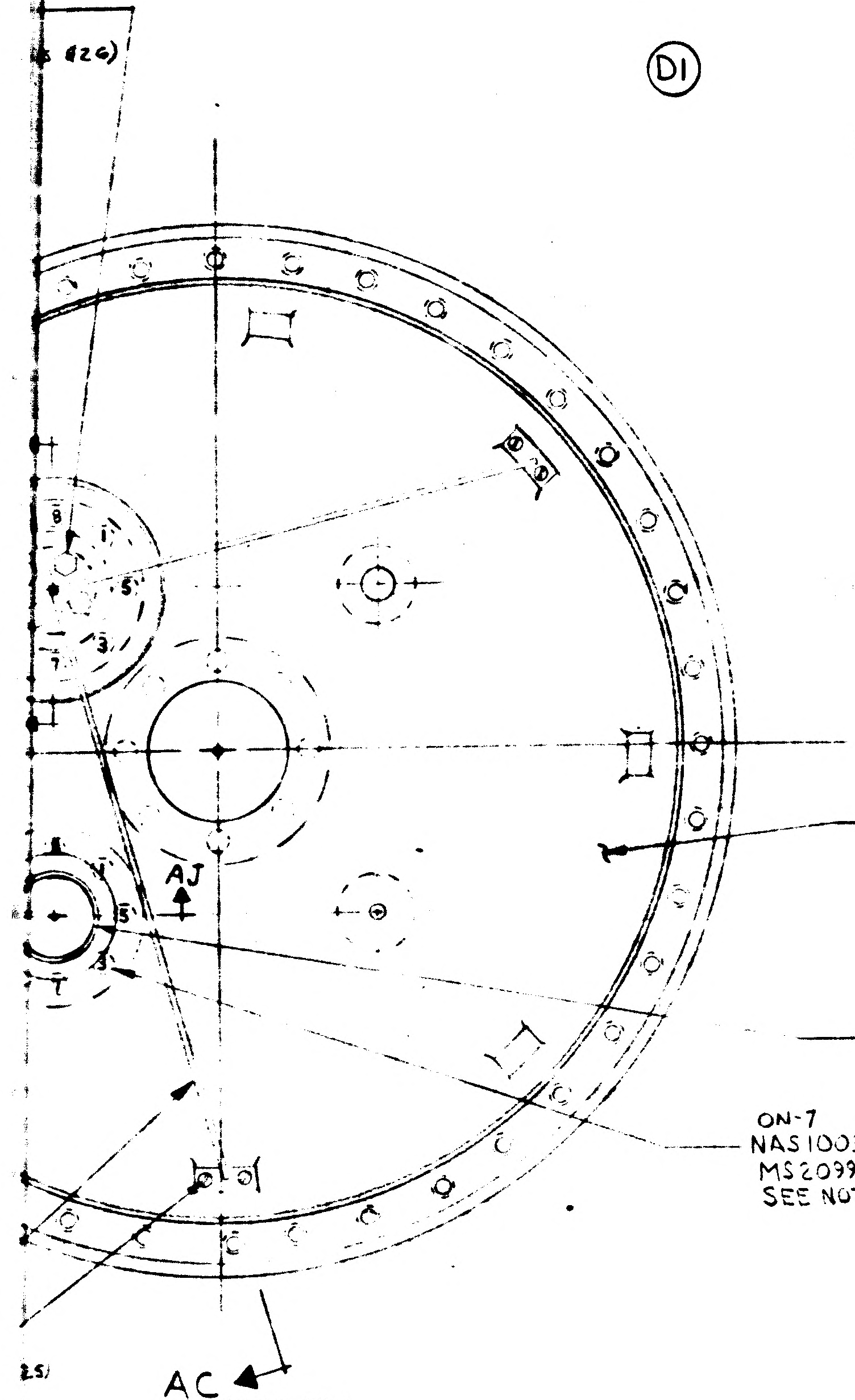

ON-7
LDW280M15566-16 COVER (-Y)
AJ
ON-7
GS570M-2-224
ON-7
NAS1003-4H(8)
MS20995C32
SEE NOTES 25 & 27
AC
ZONE 32C

DETAIL Y (-Y)
(VIEW LOOKING DOWN)
(SH 5.00 ZONE 2C)
HALF SIZE

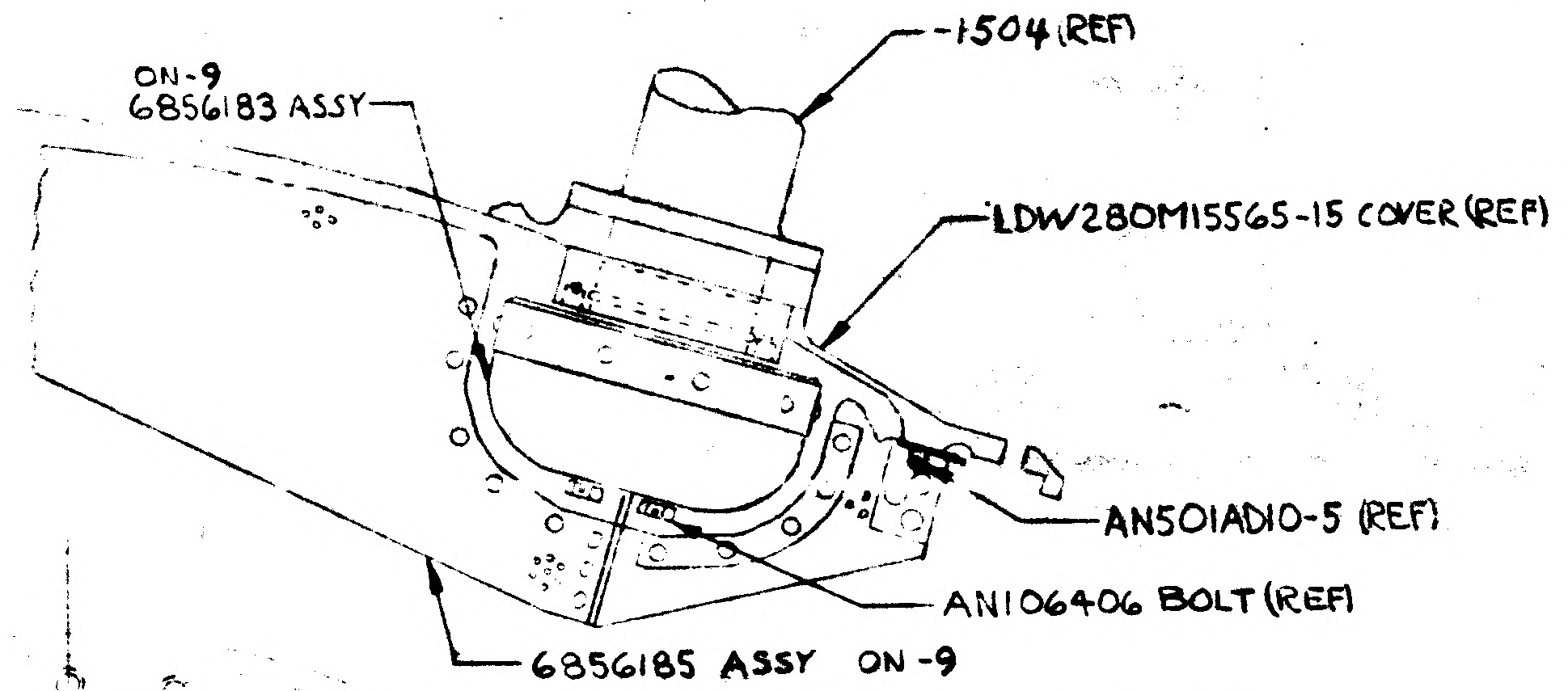

ON-9
6856183 ASSY
-1504 (REF)
LDW280M15565-15 COVER (REF)
AN501AD10-5 (REF)
AN106406 BOLT (REF)
6856185 ASSY ON-9

SECTION AB-AB
(ZONE 31B)

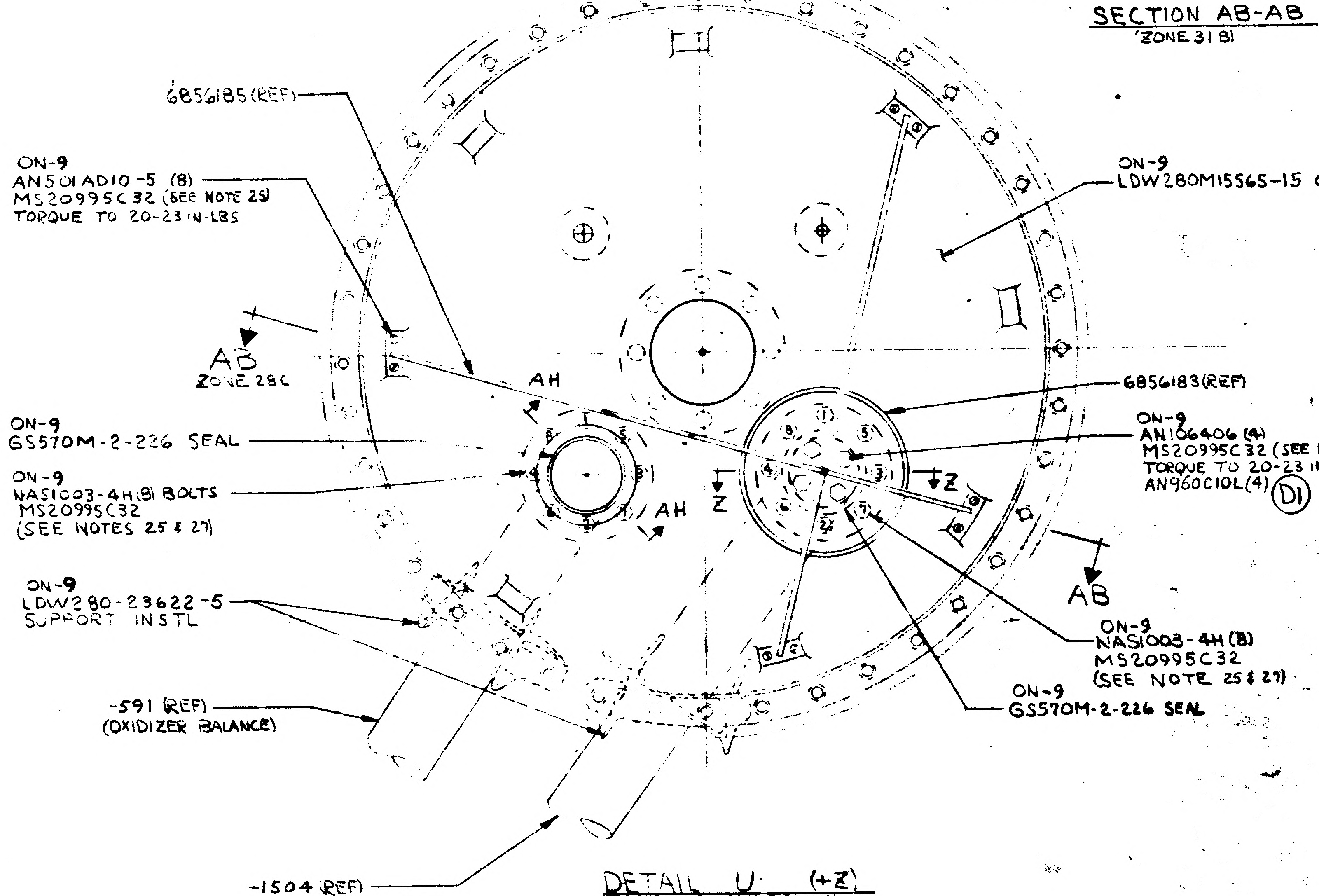

(D1)
6856185 (REF)
ON-9
AN501AD10-5 (8)
MS20995C32 (SEE NOTE 25)
TORQUE TO 20-23 IN-LBS
AB
ZONE 28C
AH
ON-9
GS570M-2-226 SEAL
ON-9
NAS1003-4H(8) BOLTS
MS20995C32
(SEE NOTES 25 & 27)
ON-9
LDW280-23622-5
SUPPORT INSTL
-591 (REF)
(OXIDIZER BALANCE)
-1504 (REF)
(OXIDIZER FEED)
ON-9
LDW280M15565-15 COVER (+Z)
6856183 (REF)
ON-9
AN106406 (4)
MS20995C32 (SEE NOTE 25 & 26)
TORQUE TO 20-23 IN-LBS
AN960C10L (4)
(D1)
AH
Z
+Z
AB
ON-9
NAS1003-4H (8)
MS20995C32
(SEE NOTE 25 & 27)
ON-9
GS570M-2-226 SEAL

DETAIL U (+Z)
VIEW LOOKING DOWN
(SH5.00 ZONE 11B)
HALF SIZE

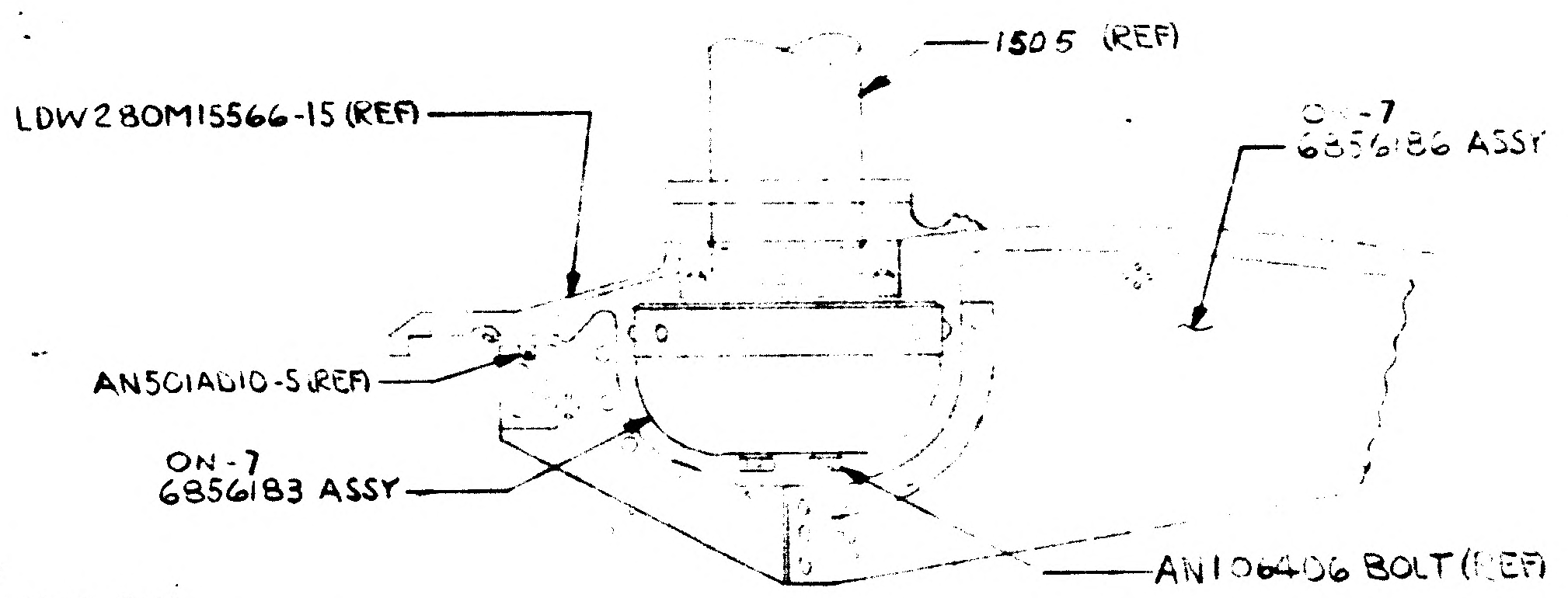

-1505 (REF)
LDW280M15566-15 (REF)
ON-7
6856186 ASSY
AN501AD10-5 (REF)
ON-7
6856183 ASSY
AN106406 BOLT (REF)

SECTION AA-AA
(ZONE 33A)

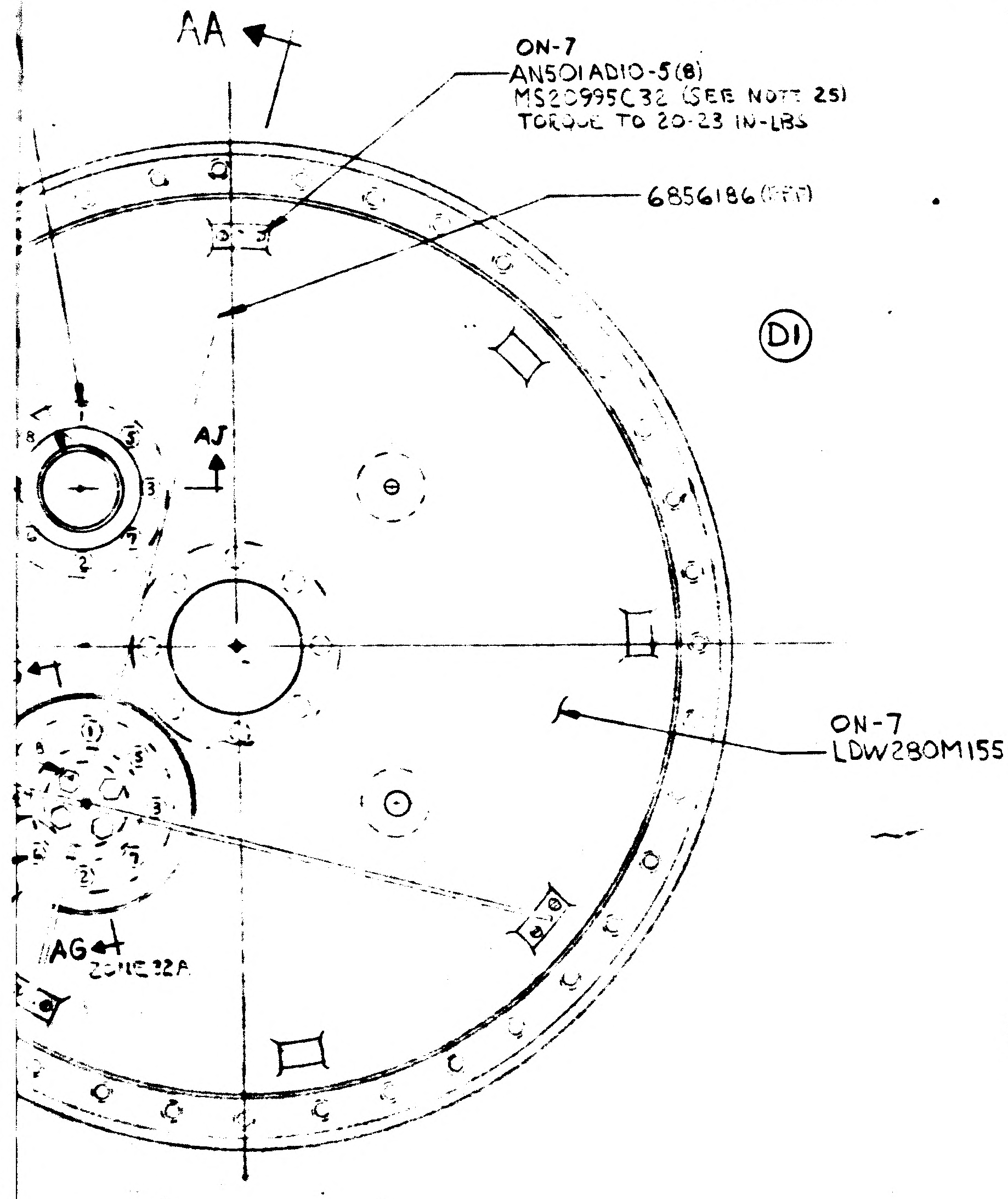

AA
ON-7
AN501AD10-5 (8)
MS20995C32 (SEE NOTE 25)
TORQUE TO 20-23 IN-LBS
6856186 (REF)
(D1)
AJ
ON-7
LDW280M15566-15 COVER (+Y)
AG
ZONE 32A

DETAIL V (+Y)
VIEW LOOKING DOWN
(SH5.00 ZONE 12A)
HALF SIZE

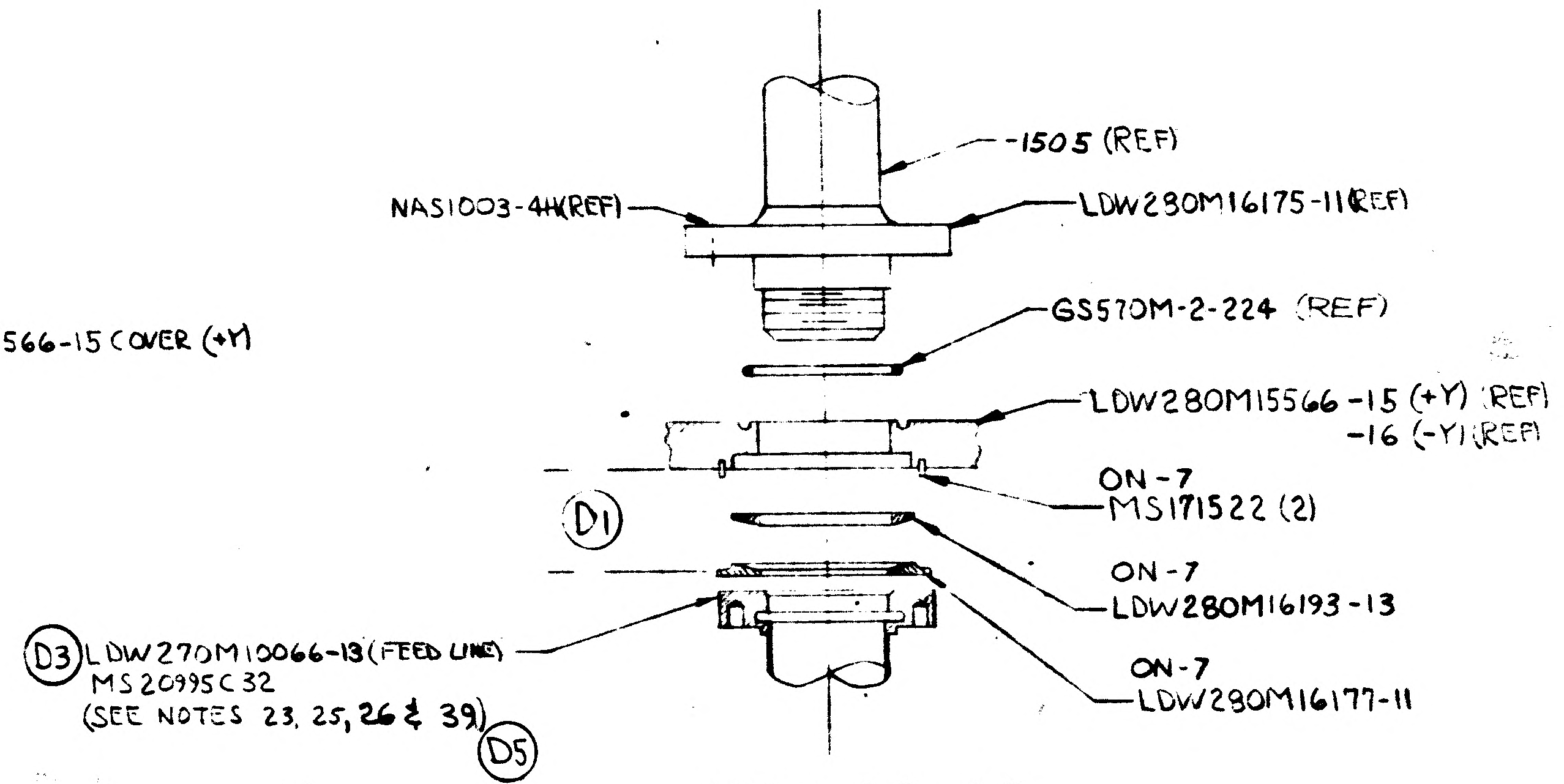

-1505 (REF)
NAS1003-4H (REF)
LDW280M16175-11 (REF)
GS570M-2-224 (REF)
LDW280M15566-15 (+Y) (REF)
-16 (-Y) (REF)
ON-7
MS171522 (2)
(D1)
ON-7
LDW280M16193-13
ON-7
LDW280M16177-11
(D3) LDW270M10066-13 (FEED LINE)
MS20995C32
(SEE NOTES 23, 25, 26 & 39)
(D5)

VIEW AG-AG
(TYP 2 PLACES ON-7)
(ZONE 31A & 31C)

TYPICAL SECT THROUGH FEED LINES
FUEL +Y, -Y TANK BAYS
NO SCALE

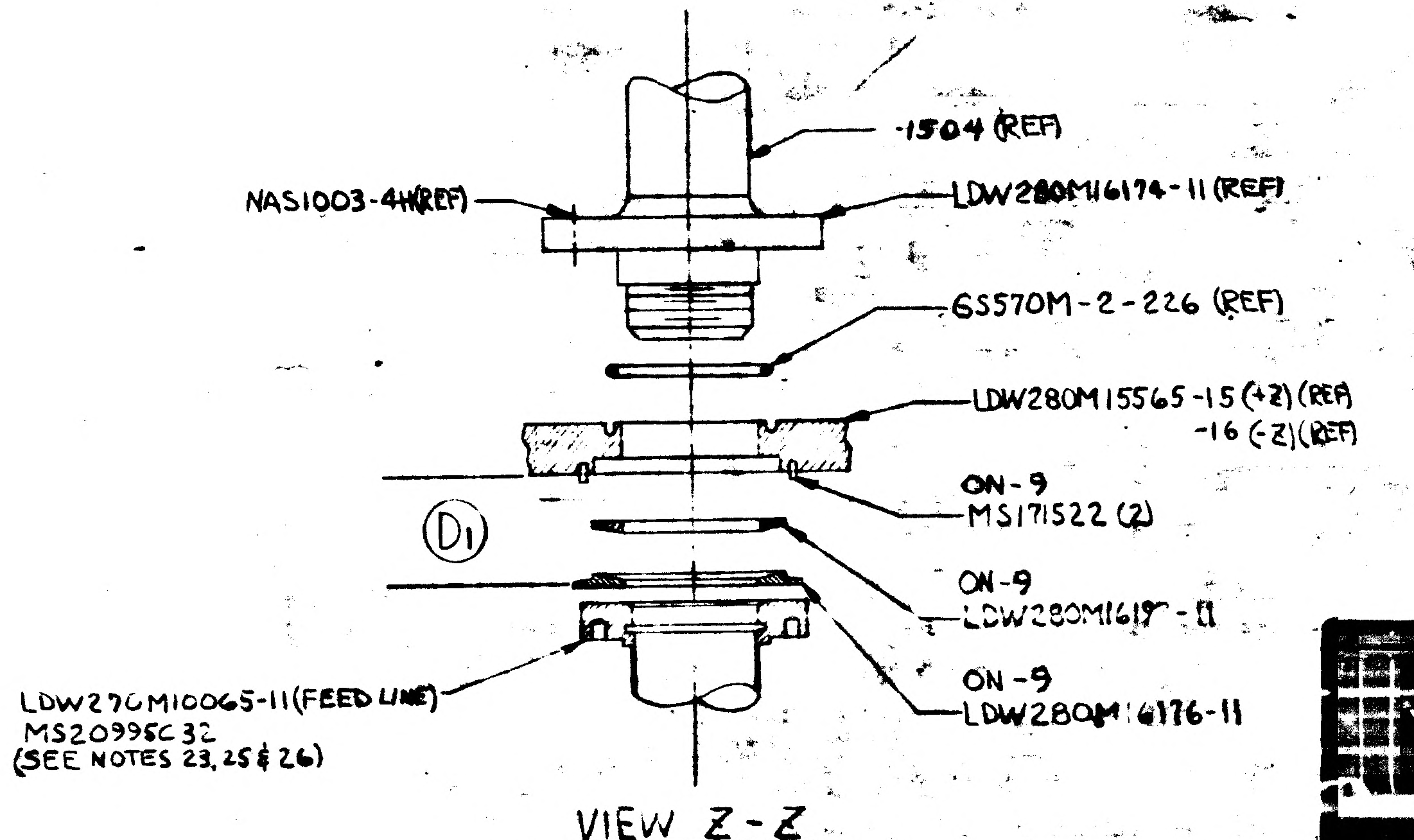

-1504 (REF)
NAS1003-4H (REF)
LDW280M16174-11 (REF)
GS570M-2-226 (REF)
LDW280M15565-15 (+Z) (REF)
-16 (-Z) (REF)
ON-9
MS171522 (2)
(D1)
ON-9
LDW280M1619?-11
ON-9
LDW280M16176-11
LDW270M10065-11 (FEED LINE)
MS20995C32
(SEE NOTES 23, 25 & 26)

VIEW Z-Z
(TYP 2 PLACES ON-9)
(ZONE 31B & 36B)

TYPICAL SECT THROUGH FEED LINES
OXIDIZER +Z, -Z TANK BAYS
NO SCALE

MANUFACTURING OPERATIONS
UNLESS OTHERWISE SPECIFIED
NOTES CHECKED √ APPLY TO THIS DWG.

PART NUMBER AND ALL OTHER MARKINGS IN REGION MARKED ▭ USE BOTH SIDES IF NECESSARY.	
FILLET AND INSIDE CORNER RADII TOLERANCES .016R TO .062R ± .010 .063R TO .250R ± .015 OVER .250R ± .030	
DEPTH SHOWN FOR TAPPED HOLES IS FULL THDS. 2-3 IMP THDS. BEYOND PERMISSIBLE.	
EXTERNAL THREAD LENGTH SHOWN INCLUDES 2 IMPERFECT THREADS MAX.	
DO NOT CADMIUM PLATE & PAINT HOLES OR SURFACES MARKED WITH DOUBLE ASTERISK.	
MISMATCH STEP OF ± .005 PERMISSIBLE DUE TO CHANGE OF CUTTERS AT INSIDE INTERSECTING SURFACES.	
DIAMETERS MARKED MUST BE CONCENTRIC WITHIN FULL INDICATOR READING	
HOLES MUST BE KEPT FREE OF CHROME PLATING SOLUTION.	
ALL DIMENSIONS SHOWN TO BE MET AFTER CADMIUM PLATING. THICKNESS OF PLATE .0003 MIN. TO .0005 MAX. MIN. THICKNESS TO BE .0002 ON THREADED AREAS. NO ALLOWANCE FOR PLATING IN HOLES	
125 √ SURFACE ROUGHNESS INCLUDING REAMED HOLES PER MIL-STD-10	
200 √ FOR ALL DRILLED HOLES	
REMOVE ALL BURRS. BREAK ALL EDGES .015-.031	
INSPECTION INFORMATION MINIMUM PERMISSIBLE AVERAGE EDGE DISTANCE MARKED IS	
SYMBOL √ DENOTES SURFACE TO BE MACHINED	
UNLESS OTHERWISE SPECIFIED TOLERANCE ON FLANGES IS ± 1/32	
LENGTHS OF AN, NAS & MS AL ALY RIVETS SHORTER THAN 1 INCH ARE NOT SPECIFIED.	
TOLERANCE ON LOFTED DELINEATIONS IS	

DWG SIZE 34 X 77.5

PRINTING INFO ONLY
FULL SIZE SHEET AREA (36 X 87.5) = 21.8 SQ. FT.
1/2 SIZE SHEET AREA (1/4 OF FULL) = 5.45 SQ. FT.

PRINT TRIM LINE

C

B

A

LDW280-52608 D

LDW280-52608 D

02/02 NAS 9-1100

	GRUMMAN AIRCRAFT ENGRG CORP., BETHPAGE, L. I., NEW YORK			
	SIZE J	CODE IDENT NO. 26512	LDW280-52608	D
MODEL OR END ITEM	SCALE NOTED		SHEET 7.00	

ENG 32.1 REV 3-65

GRUMMAN AIRCRAFT ENGINEERING CORP.
CODE IDENT NO. 26512
ENGINEERING ORDER

DWG. NO. LDW280-52608
EO NO. D1
CONTROL INFO NO. LDW280B0120

DESCRIPTION OF EO

IN F/D

DETAIL AJ	ZONE 34C	}	REMOVED CALLOUT ".005 ALLOWABLE GAP AFTER ASSY"
DETAIL AH	ZONE 34A		
VIEW AG-AG	ZONE 32A		
VIEW Z-Z	ZONE 30A		
DETAIL V	ZONE 33A	}	6849963 RACO SEAL ON-5 WAS ON-7 (SEE NOTE 30)
DETAIL Y	ZONE 33C		
DETAIL U	ZONE 30B	}	6849963 RACO SEAL ON-5 WAS ON-9 (SEE NOTE 30)
DETAIL W	ZONE 35B		
DETAIL U	ZONE 30B		ADDED CALLOUT "AN960C10L (4)"

IN B/M

ADDED AN501AD10-5 SCREW (16) ON -7, (16) ON -9 CL J
ADDED 6856183 ZERO 'G' CAN (2) ON-7, (2) ON -9 CL J
LDW280M16176-11 (4) ON -9 WAS (4) ON -7
LDW280M16177-11 (4) ON -7 WAS (4) ON-9
ADDED AN960C10L WASHER (8) ON -7, (8) ON -9 CLJ
ON -7 GS570M-2-224 (4) REQ WAS (2) REQ
ON-9 GS570M-2-226 (4) REQ WAS (2) REQ

IN NOTE 19 REMOVE THAT PART OF THE NOTE THAT SAYS "LDW280-17388 PLATES" REPLACE WITH THE WORDS "PLATES OF -7 & -9 ASSY"

LMLK

DETAIL SPEC REQ		CL II ENGRG CHG		CL I ENGRG CHG	✓ LCD 1894

5

REASON FOR EO	DESCRIPTION OF EO	Ⓡ GAEC EO RELEASE
REDUCE PROPELLANT LEAKAGE	SEE ABOVE	DK 10/31/67

MODEL	EFFECTIVITY: PROCURING ACTIVITY NO.	GAEC UNIT NO.	SUB CONTR UNIT NO.
LM		LM-2(32)	

DRAWING CHANGE REQD: REVISE DWG	RECORD EO	DISPOSITION OF PARTS: REWORK	SCRAP
✓		✓	

APPROVED BY									
DATE	10/27/67			10/27/67	10/27/67		10/28/67	10-30-67
	B	VDI	SUPPORT	RELIAB. GROUP	GROUP LEADER	STRESS GROUP	LIAISON ENGRG	PROJ ENGRG	

PRIORITY	DRAWING TITLE	DRAWING NO.	EO NO.
C	LINES INSTL PROPULSION & PRESSURIZATION SYSTEM D/C	LDW280-52608	D1

110467
ISSUED BY HUGH RYAN X1392 10-27-67 SECTION VDI (EQUIP LINES) GROUP NO. 332 PL 25

01

NAS 9-1100

ENG 32.1 REV 3-65

GRUMMAN AIRCRAFT ENGINEERING CORP.
CODE IDENT NO. 26512
ENGINEERING ORDER

DWG. NO. LEO 280
EO NO. 769
CONTROL INFO NO. LDW280B0076

DELETE NOTE * FROM THE FOLLOWING DWGS

DRAWING NUMBER	EFFECTIVITY	CHANGE NUMBER	NOTE *
LDW280-52353 ✓	LM-2(32)	C1	8
-52354 ✓	LM-2(32)	A6	3
-52355 ✓	LM-2(32)	D1	8
-52356 ✓	LM-2 (32)	A8	5
-52351 ✓	LM-2 (32)	A9	5
-52350 ✓	LM-2(32)	E1	31
LDW280-52608 ✓	LM-2(32)	D2	7

DETAIL SPEC REQ ☐ CL II ENGRG CHG ☐ CL I ENGRG CHG ☑ LCD 1961

5

REASON FOR EO: BONDING NOTE NOT REQD

DESCRIPTION OF EO: DELETED NOTE *

GAEC EO RELEASE: JK 10/31/67

MODEL	PROCURING ACTIVITY NO.	GAEC UNIT NO.	SUB CONTR UNIT NO.
LM		LM-2(32)	

DRAWING CHANGE REQD: REVISE DWG ✓ RECORD EO ☐

DISPOSITION OF PARTS: REWORK NOT REQD SCAP REQD

APPROVED BY	JAS			HJW	WJB		MLP	Jecod	
DATE	10/26/67			10/26/67	10/27/67		10/31/67	10/30/67	
E	VDI	SUPPORT	RELIAB. GROUP	GROUP LEADER	STRESS GROUP	LIAISON ENGRG	PROJ ENGRG	~~GAEC~~	

PRIORITY: C

DRAWING TITLE: LINES INSTL PIPING ASCENT STAGE & DESCENT STAGE

DRAWING NO.: LEO280

EO NO.: 769

11-2-67

ISSUED BY J. DE VITA X1153 (10-25-67) SECTION EQUIP LINES (VDI) GROUP NO. 332 PL 25

01

NAS 9-1100

ENG 32.1 REV 3-65

GRUMMAN AIRCRAFT ENGINEERING CORP.
CODE IDENT NO. 26512
ENGINEERING ORDER

DWG. NO.	LEO 270	EO NO.	64
CONTROL INFO NO.	LM-5-17178		

IN F/D & B/M FOR DWGS LISTED BELOW ADD:

LDW 270 M 10066-13 (WAS LDW 270 M 10066-11)

EFF.	DWG *	TITLE	CHANGE NO
LTA-5(15)	LDW 280-25608-1	LINES INSTALLATION-PROPULSION & PRESSURIZATION SYSTEM, DESCENT STAGE	B1 ✓
LM-2(32)	LDW 280-52608-1&-3	SAME	D3 ✓
LM-3(33)	LDW 280-53608-1&-3	SAME	D6
LM-4(34) & LM-5(45)	LDW 280-54608-1&-3	SAME	D1

RELEASED BY LIAISON

DETAIL SPEC REQ	☐	CL II ENGRG CHG	☑	CL I ENGRG CHG	☐

REASON FOR EO: To Up Date NHA

DESCRIPTION OF EO: IN F/D & B/M ADDED LDW 270M10066-13 (WAS LDW 270M10066-11) FOR *

GAEC EO RELEASE: JK 5

MODEL	EFFECTIVITY [redacted]	GAEC UNIT NO.	SUB CONTR UNIT NO.
	NOTED	ABOVE	

DRAWING CHANGE REQD: REVISE DWG	RECORD EO	DISPOSITION OF PARTS: REWORK	SCRAP	APPROVED BY		SUPPORT	RELIAB. GROUP	GROUP LEADER	STRESS GROUP	LIAISON ENGRG	PROJ ENGRG	
✓		NOT REQD		DATE 10-24-67				RB 11/6/67	JFJ 10-25-67	CH 10-24-67	MHV 11/6/67	11-6-67

PRIORITY	DRAWING TITLE	DRAWING NO.	EO NO.
C	NOTED	LEO 270	64

ISSUED BY LIAISON V. MAGGIPINTO SECTION PROPULSION GROUP NO. 270 PL 25

01

NAS 9-1100

EMD 2B.2 REV 3-65

GRUMMAN AIRCRAFT ENGINEERING CORP.
CODE IDENT NO. 26512
ENGINEERING ORDER

DWG. NO. LDW280-52608		EO NO.	D4
CONTROL INFO NO.	LDW280B-0396		

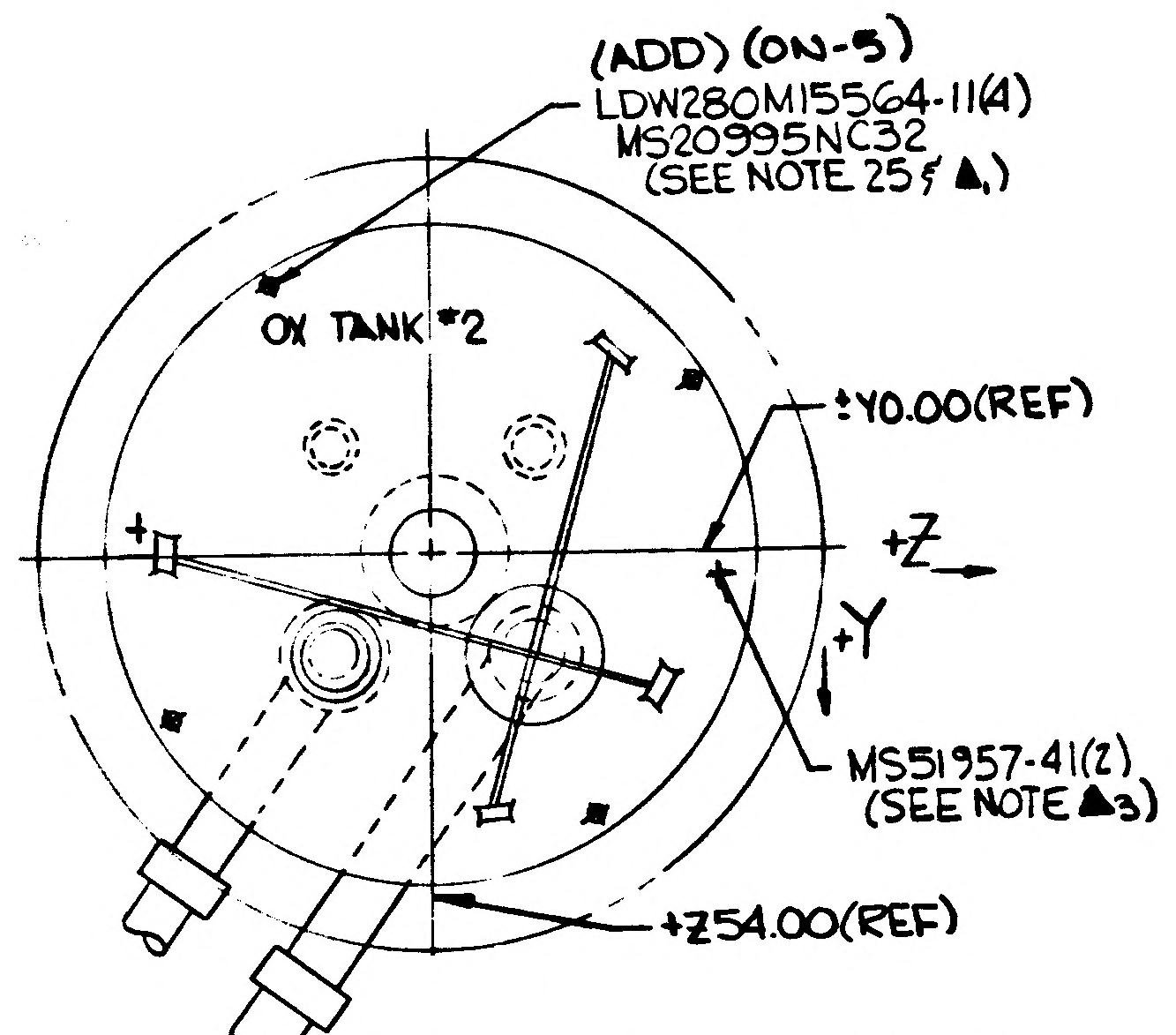

(ADD) (ON-5)
LDW280M15564-11(4)
MS20995NC32
(SEE NOTE 25 & ▲1)
OX TANK #2
±Y0.00(REF)
+Z
+Y
MS51957-41(2)
(SEE NOTE ▲3)
+Z54.00(REF)

PARTIAL VIEW OF PLAN VIEW LKG DOWN (REF)
(SH 5, ZONE 11B)

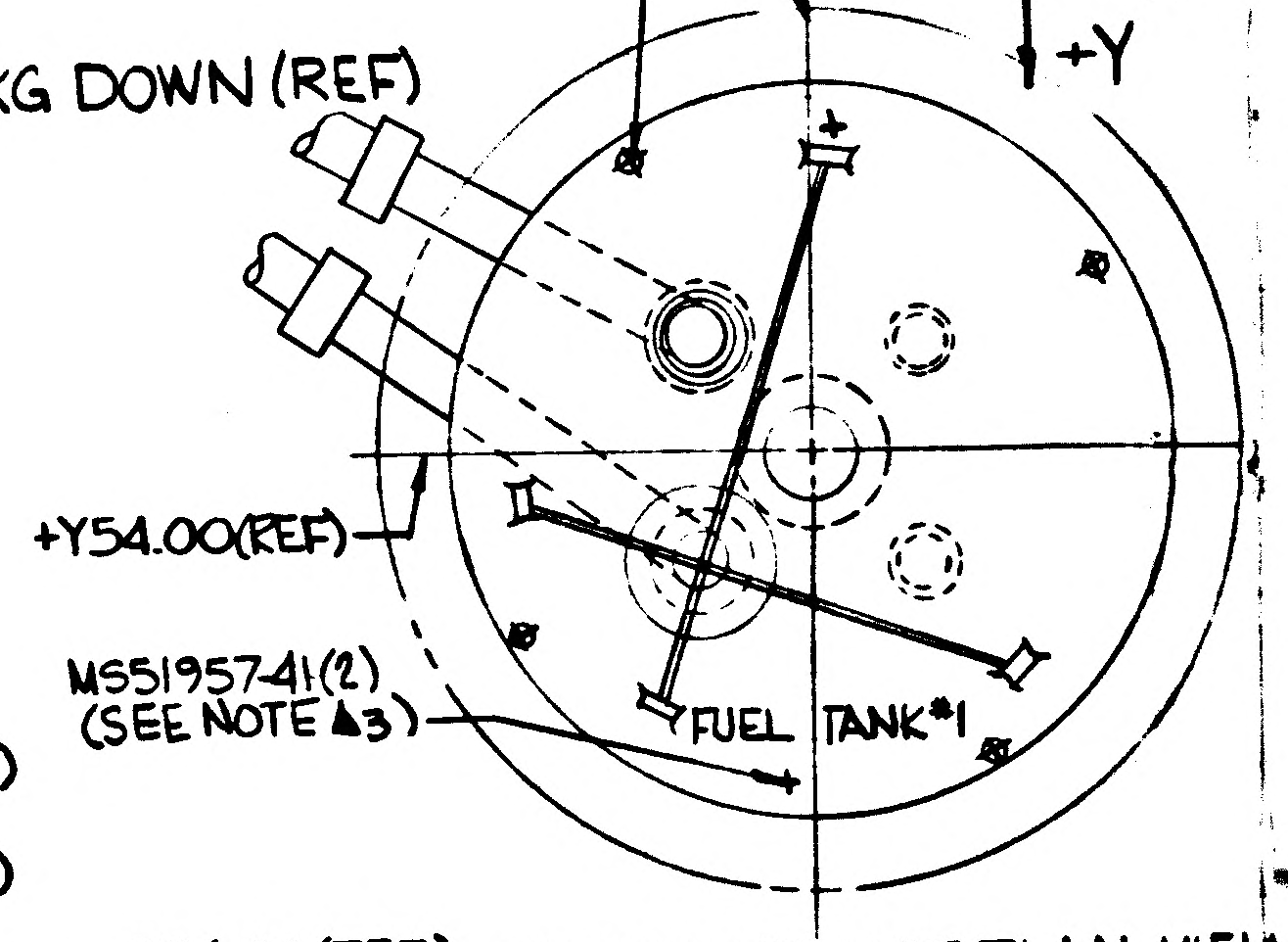

(ADD) (ON-5)
LDW280M15564-11(4)
MS20995NC32
(SEE NOTE 25 & ▲1)
±Z0.00(REF)
+Z
+Y
+Y54.00(REF)
MS51957-41(2)
(SEE NOTE ▲3)
FUEL TANK #1

PARTIAL VIEW OF PLAN VIEW LKG DOWN (REF)
(SH5 ZONE 12A)

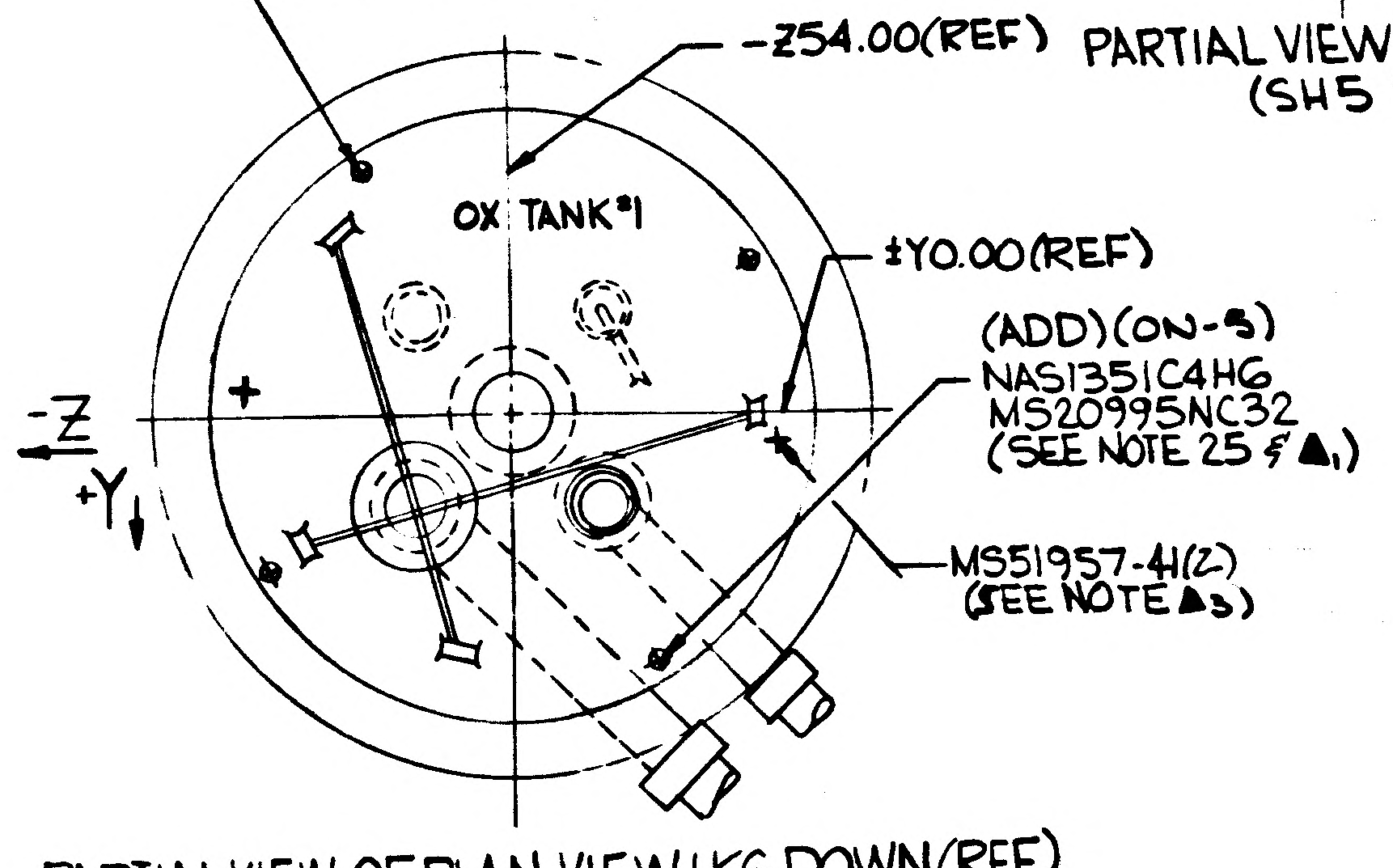

(ADD) (ON-5)
LDW280M15564-11(3)
MS20995NC32
(SEE NOTE 25 & ▲1)
-Z54.00(REF)
OX TANK #1
±Y0.00(REF)
(ADD) (ON-5)
NAS1351C4H6
MS20995NC32
(SEE NOTE 25 & ▲1)
-Z
+Y
MS51957-41(2)
(SEE NOTE ▲3)

PARTIAL VIEW OF PLAN VIEW LKG DOWN (REF)
(SH 5, ZONE 13B)

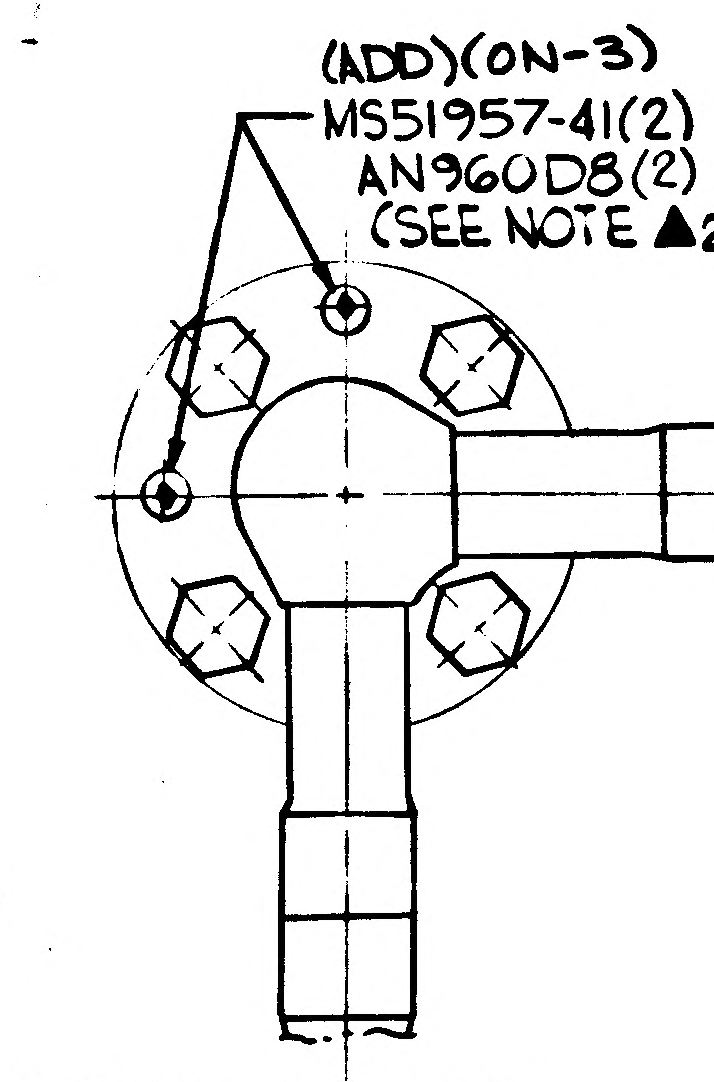

(ADD) (ON-3)
MS51957-41(2)
AN960D8(2)
(SEE NOTE ▲2)

PARTIAL VIEW OF DETAIL S-S (SH 4, ZONE 9C)
(TYP 4 PLACES)

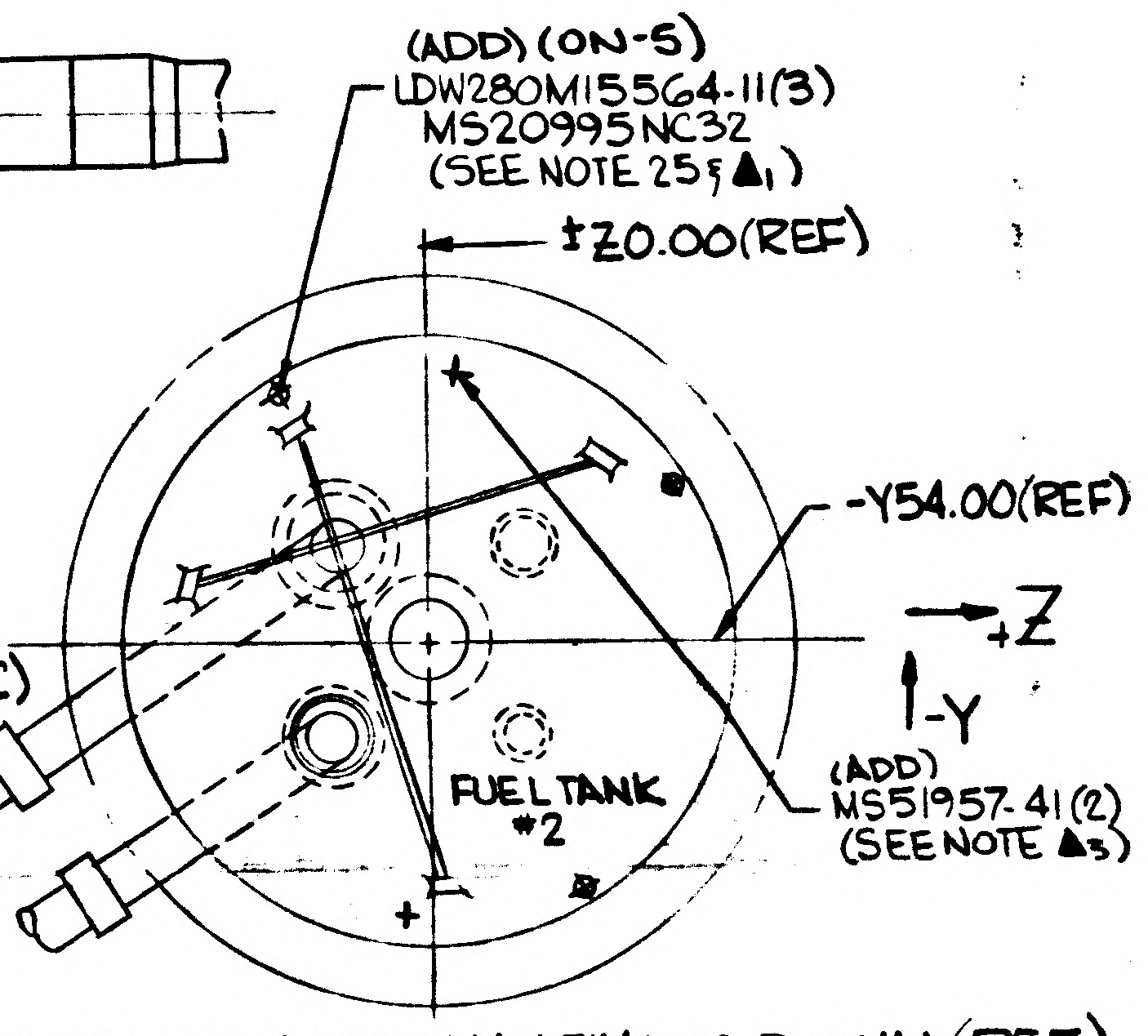

(ADD) (ON-5)
LDW280M15564-11(3)
MS20995NC32
(SEE NOTE 25 & ▲1)
±Z0.00(REF)
-Y54.00(REF)
Z
-Y
(ADD)
MS51957-41(2)
(SEE NOTE ▲3)
FUEL TANK #2

PARTIAL VIEW OF PLAN VIEW LKG DOWN (REF)
(SH 5, ZONE 12C)

NOTE ▲3 (CONT). RE-INSTALL SCREWS PER LPC280-47. TORQUE TO 15-20 IN LBS.

NOTES:

▲1 INSTALL BOLTS PER LPC280-47. TORQUE TO 15-20 IN-LBS & LOCKWIRE TO TANK COVER BOLTS.

▲2 ON INSTALLATION APPLY SECONDARY SEALANT LSM14-4106 (NITROSO) ON DIFFUSERS OF OXIDIZER TANKS AND LSM14-4105 (VISTANEX) ON DIFFUSER OF FUEL TANKS PER LPC280-46. AFTER PROCEDURE HAS BEEN ACCOMPLISHED, INSTALL MS51957-41 SCREWS PER LPC 280-47 & TORQUE TO 15-20 IN-LBS.

▲3 REMOVE MS51957-41 SCREW PRIOR TO LEAK CHECK OF PRIMARY SEAL. AFTER LEAK CHECK HAS BEEN PERFORMED (CONT ABOVE)

▲1 & ▲2, ▲3 NEXT AVAIL NOTE NO

DETAIL SPEC REQ	☐	CL II ENGRG CHG	☐	CL I ENGRG CHG	☑ LCD 1894 ⑤

REASON FOR EO: REDUCE PROPELLANT LEAKAGE

DESCRIPTION OF EO: (ON-3) ADDED MS51957-41(16) & AN960D8(8). (ON-5) ADDED LDW280M15564-11(14), MS20995NC32, NAS1351C4H6. ADDED NOTES ▲1, ▲2 & ▲3

GAEC EO RELEASE: JK 11/4/67

MODEL	PROCURING ACTIVITY NO.	GAEC UNIT NO.	SUB CONTR UNIT NO.
LM		LM-2(32)	

DRAWING CHANGE REQD: REVISE DWG	RECORD EO	DISPOSITION OF PARTS: REWORK	SCRAP
✓		✓	

APPROVED BY									
DATE	11/4/67				11/4/67	11/14		11/4/67	11-14-67
S	VD1	SUPPORT	RELIAB. GROUP	GROUP LEADER	STRESS GROUP	LIAISON ENGRG	PROJ ENGRG	GSFP	

PRIORITY	DRAWING TITLE	DRAWING NO.	EO NO.
C	LINES INSTL PROPULSION & PRESSURIZATION SYSTEM - DESCENT STAGE	LDW280-52608	D4

ISSUED BY P.J MARTELLO X1153 SECTION VD1 (EQUIP LINES) GROUP NO. 332 PL. 25

01

NAS 9-1100

ENG 32.1 REV 3-65

GRUMMAN AIRCRAFT ENGINEERING CORP.
CODE IDENT NO. 26512
ENGINEERING ORDER

DWG. NO. LDW 280-52608
EO NO. D5
CONTROL INFO NO. LM-5-17315

IN GENERAL NOTES ADD NOTE *

* LDW 270M 10066-11 MAY BE USED AS AN ALTERNATE PART ON -7

IN F/D BELOW LDW 270M 10066-13
ADD (SEE NOTE *)

RELEASED BY LIAISON

* NEXT AVAILABLE NOTE NO

DETAIL SPEC REQ ☐ CL II ENGRG CHG ☑ CL I ENGRG CHG ☐

REASON FOR EO: ADDING ALTERNATE PART

DESCRIPTION OF EO: IN G/N ADDED NOTE NO *

GAEC EO RELEASE: JK

MODEL	EFFECTIVITY		
	PROCURING ACTIVITY NO.	GAEC UNIT NO.	SUB CONTR UNIT NO.
LM		LM-2C32	

DRAWING CHANGE REQD: REVISE DWG ✓ RECORD EO ☐

DISPOSITION OF PARTS: NOT REQD (REWORK / SCRAP)

		SUPPORT	RELIAB. GROUP	GROUP LEADER	STRESS GROUP	LIAISON ENGRG	PROJ ENGRG	~~GOVT~~
APPROVED BY				—		CH		
DATE	11-13-67 VDI			—	11-15-67	11-15-67	11/20/67	11/15/67

PRIORITY: C

DRAWING TITLE: LINES INSTALLATION - PROPULSION & PRESSURIZATION SYSTEM, D/S

DRAWING NO. LDW 280-52608

EO NO. D5

ISSUED BY LIAISON V. MAGGIPINTO/86755 SECTION PROPULSION GROUP NO. 280 PL 25

01

NAS 9-1100

ENG 32.2 REV 3-65

GRUMMAN AIRCRAFT ENGINEERING CORP.
CODE IDENT NO. 26512
ENGINEERING ORDER

DWG. NO. LEO 280		EO NO. 816
CONTROL INFO NO. LM-5-17618		

TO THE FOLLOWING DRAWING'S ADD NOTE ✱ IN F/D

✱ NOTE
ANY TWO ADJACENT BOLTS MAY BE REMOVED,
REINSTALLED AND TORQUED TO PRINT VALVUES
WITHOUT REPEATING THE 72 HRS TORQUE CYCLE

DRAWING NO ✱	DRAWING TITLE	CHANGE NO.	EFFECTIVITY
LDW 280-52608 -3 & -5	LINE INSTALLATION PROP. & PRESSURIZATION SYSTEM D/S	D6	LM-2 (32)
LDW 280-53608 -3 & -5	LINE INSTALLATION PROP. & PRESSURIZATION SYSTEM D/S	E1	LM-3 (33)
LDW 280-54608 -1,-3,-5,-19	LINE INSTALLATION PROP. & PRESSURIZATION SYSTEM D/S	D5	LM-4 (34) THRU LM-15 (45)
LDW 280-52350 -3	LINES INSTALLATION PROPELLANT FEED SYSTEM A/S	F2	LM-2 (32)
LDW 280-53981 -1	LINE INSTALLATION PROPELLANT FEED SYSTEM A/S	B6	LM-3 (33)
LDW 280-54981 -1	LINE INSTALLATION PROPELLANT FEED SYSTEM A/S	B3	LM-4 (34) THRU LM-15 (45)

01
NAS 9-1100

✱USE NEXT AVAILABLE NOTE NO.

RELEASED BY LIAISON

DETAIL SPEC REQ	☐	CL II ENGRG CHG	☑	CL I ENGRG CHG	☐

REASON FOR EO	DESCRIPTION OF EO
REMOVAL TECHNIQUE	IN F/D ADDED NOTE ✱ FOR ✱

GAEC EO RELEASE: VC

MODEL	EFFECTIVITY			DRAWING CHANGE REQD		DISPOSITION OF PARTS	
	PROCURING ACTIVITY NO.	GAEC UNIT NO.	SUB CONTR UNIT NO.	REVISE DWG	RECORD EO	REWORK	SCRAP
LM		NOTED		✓		✓	

APPROVED BY				—	DV	DV	JAP	
DATE	12/21/67				12/14	12/14	12/21/67	12/5/67
12-14-67	VDI	SUPPORT	RELIAB. GROUP	GROUP LEADER	STRESS GROUP	LIAISON ENGRG	PROJ ENGRG	GOVT

PRIORITY	DRAWING TITLE	DRAWING NO.	EO NO.
C	NOTED	LEO 280	816

ISSUED BY ✱ D. VALENZA/F.P. X86755 SECTION V.D.I. GROUP NO. 335 PL 25

01 NAS 9-1100

ENG 32.2 REV 3-65

GRUMMAN AIRCRAFT ENGINEERING CORP.
CODE IDENT NO. 26512
ENGINEERING ORDER

DWG NO. LDW280-52608
EO NO. E1
CONTROL INFO NO. LDW280B2941

ON-5 INSTL
ADD TO FIELD & B/M AS SHOWN

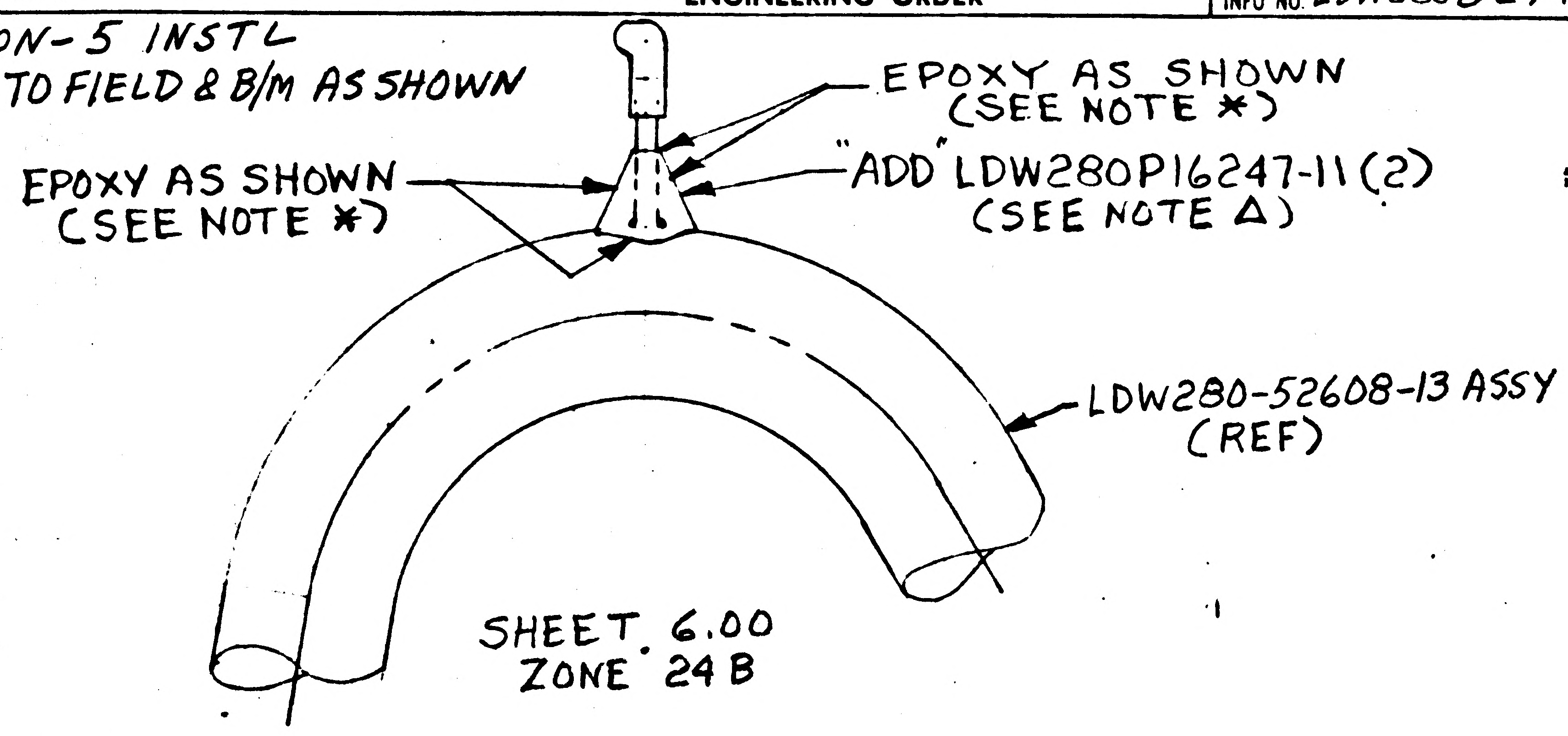
EPOXY AS SHOWN
(SEE NOTE *)
EPOXY AS SHOWN
(SEE NOTE *)
"ADD" LDW280P16247-11 (2)
(SEE NOTE Δ)
LDW280-52608-13 ASSY
(REF)
SHEET 6.00
ZONE 24 B

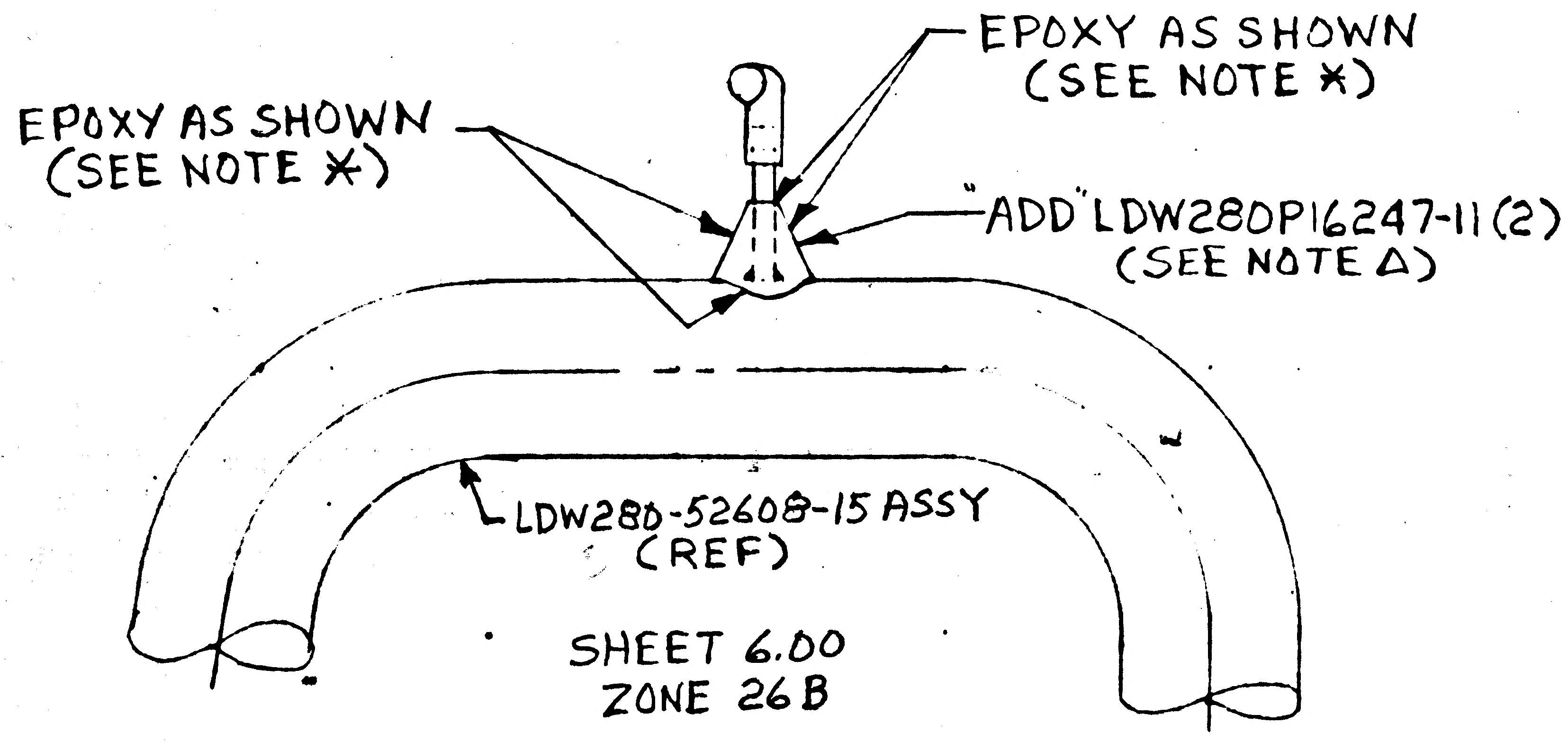
EPOXY AS SHOWN
(SEE NOTE *)
EPOXY AS SHOWN
(SEE NOTE *)
"ADD" LDW280P16247-11 (2)
(SEE NOTE Δ)
LDW280-52608-15 ASSY
(REF)
SHEET 6.00
ZONE 26B

LFM

ADD NOTE *
EPOXY USING EPON 934A PER LSP-14-22500
CURE RANGE OPTIONAL

ADD NOTE Δ
LDW280P16247-11 TO BE INSTALLED AFTER COLD FLOW II
1/32 MAX GAP ALLOWABLE BETWEEN PLASTIC PARTS AND/OR TUBES
BEFORE APPLYING EPOXY

Δ,* USE NEXT HIGHEST
NOTE NUMBER

THIS IS AN ORIGINAL E.O.

DETAIL SPEC REQ ☐ CL II ENGRG CHG ☐ CL I ENGRG CHG ✓ LCD 2935 PKG 2 (5)

REASON FOR EO: ADDITIONAL SUPPORTS FOR HIGH POINT BLEEDS

DESCRIPTION OF EO: ON-5 INSTL
IN FIELD & B/M ADDED LDW280P16247-11 (4 REQD)
ADDED NOTES Δ & *

GAEC C EO RELEASE: JK 6/20/68

MODEL	PROCURING ACTIVITY NO.	GAEC UNIT NO.	SUB CONTR UNIT NO.
LM	LFM-184	LM2 (32)	

DRAWING CHANGE REQD: REVISE DWG ✓ RECORD EO
DISPOSITION OF PARTS: REWORK ✓ SCRAP

	VDI	SUPPORT	RELIAB. GROUP	GROUP LEADER	STRESS GROUP	LIAISON ENGRG	PROJ ENGRG	
APPROVED BY	JAS			JW	WH		JaP	JM
DATE	4/11/68			4/17/68	4/19/68		4/19/68	6-20-68
5								

PRIORITY: C
DRAWING TITLE: LINES INSTL PROPULSION & HELIUM PRESS SYST D/S
DRAWING NO.: LDW280-52608
EO NO.: E1

4-29-68
ISSUED BY J. Bohun X1392 SECTION Equip Lines (VDI) GROUP NO. 332 PL. 25

01

NAS 9-1100

ENG 32.2 REV 3-65

GRUMMAN AIRCRAFT ENGINEERING CORP.
CODE IDENT NO. 26512
ENGINEERING ORDER

DWG. NO. LEO 280 EO NO. 843
CONTROL INFO NO. LM-5-17857

THIS LEO REVISES CHANGES LISTED ON LEO 280-816 FOR THE Following DWGS.
TO THE FOLLOWING DRAWING'S REVISED NOTE ✱

✱ NOTE ANY TWO ADJACENT BOLTS MAY BE REMOVED, REINSTALLED AND TORQUED TO PRINT VALUES WITHOUT REPEATING THE TORQUE CYCLE ON REMAINING BOLT PATTERN.

WAS

ANY TWO ADJACENT BOLTS MAY BE REMOVED, REINSTALLED AND TORQUED TO PRINT VALUES WITHOUT REPEATING THE 72 HOURS TORQUE CYCLE.

DRAWING NO.	DRAWING TITLE	REVISED CHANGE NO.	REVISING CHANGE NO.	EFFECTIVITY
✓ LDW 280-52608 -3 & -5	LINE INSTALLATION PROP. & PRESSURIZATION SYSTEM D/S	D6	E1	LM-2 (32)
LDW 280-53608 -3 & -5	LINE INSTALLATION PROP. & PRESSURIZATION SYSTEM D/S	E1	E3	LM-3 (33)
LDW 280-54608 -1-3-5-19	LINE INSTALLATION PROP. & PRESSURIZATION SYSTEM D/S	D5	D9	LM-4 (34) THRU LM-15 (45)
LDW 280-52350 -3	LINE INSTALLATION PROPELLANT FEED SYSTEM A/S	F2	F3	LM-2 (32)
LDW 280-53981 -1	LINE INSTALLATION PROPELLANT FEED SYSTEM A/S	B6	C1	LM-3 (33)
LDW 280-54981 -1	LINE INSTALLATION PROPELLANT FEED SYSTEM A/S	B3	C1	LM-4 (34) THRU LM-15 (45)

RELEASED BY LIAISON

DETAIL SPEC REQ	☐	CL II ENGRG CHG	☑	CL I ENGRG CHG	☐

REASON FOR EO: REMOVAL TECHNIQUE & NOTE CLARIFICATION

DESCRIPTION OF EO: REF. (NOTED) CHG ON LEO 280-816 REVISED NOTE ✱ WAS ANY TWO ADJACENT BOLTS MAY BE REMOVED, REINSTALLED AND TORQUED TO PRINT VALUES WITHOUT REPEATING THE 72 HOURS TORQUE CYCLE.

GAEC EO RELEASE (5) VK

MODEL	EFFECTIVITY: PROCURING ACTIVITY NO.	GAEC UNIT NO.	SUB CONTR UNIT NO.
LM		NOTED	
		ABOVE	

DRAWING CHANGE REQD: REVISE DWG	RECORD EO	DISPOSITION OF PARTS: REWORK	SCRAP
✓		✓	

	VD1	SUPPORT	RELIAB. GROUP	GROUP LEADER	STRESS GROUP	LIAISON ENGRG	PROJ ENGRG
APPROVED BY				—			
DATE	1/17/68				1-18-68	1-18-68	1/17/68

1/18/68

PRIORITY: C
DRAWING TITLE: NOTED
DRAWING NO. LEO 280
EO NO. 843

ISSUED BY LIAISON J. McGILL / F.P. x86755 SECTION V.D.I. GROUP NO. 335 PL 25

ENG 32.2 REV 3-65

GRUMMAN AIRCRAFT ENGINEERING CORP.
CODE IDENT NO. 26512
ENGINEERING ORDER

DWG NO. LDW280-52608
EO NO. E2
CONTROL INFO NO. LDW280B2941

ON-5 INSTL
ADD TO FIELD & B/M AS SHOWN

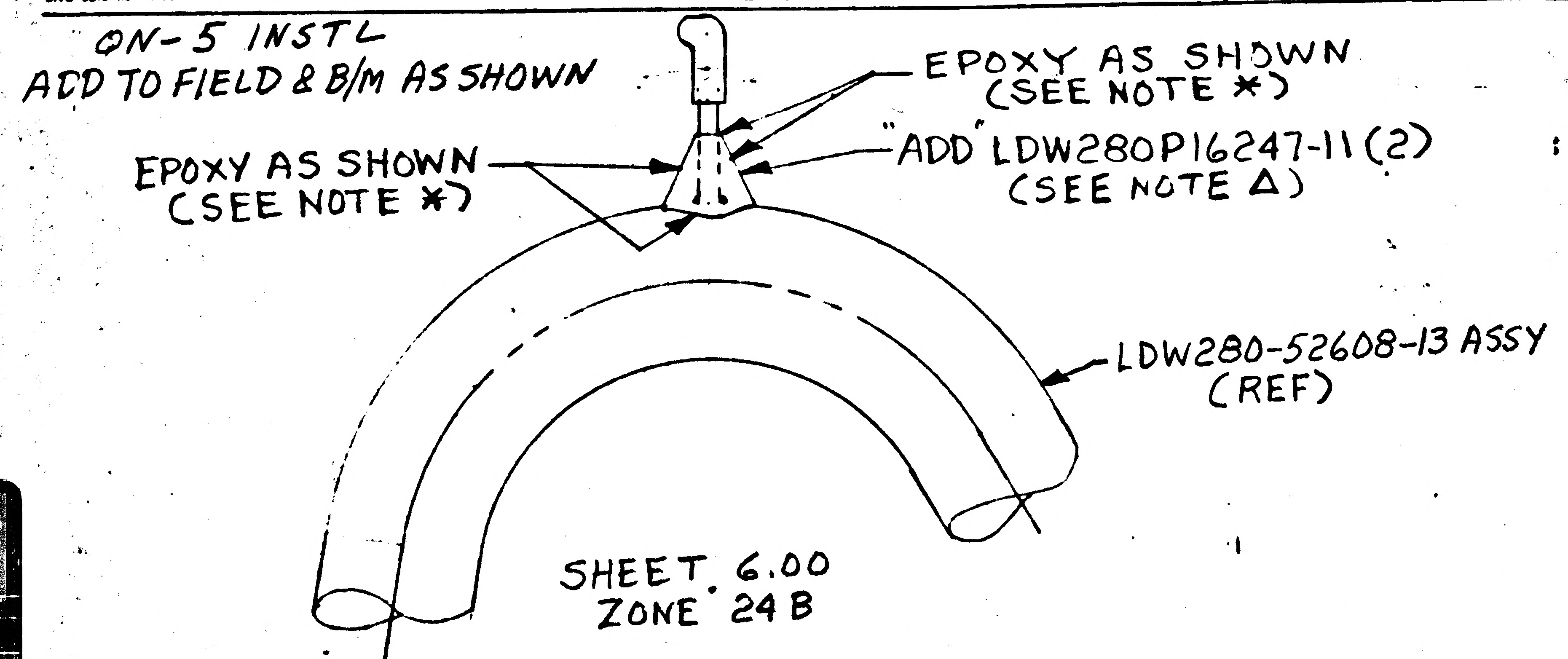

EPOXY AS SHOWN
(SEE NOTE *)
EPOXY AS SHOWN
(SEE NOTE *)
"ADD" LDW280P16247-11 (2)
(SEE NOTE Δ)
LDW280-52608-13 ASSY
(REF)
SHEET 6.00
ZONE 24 B

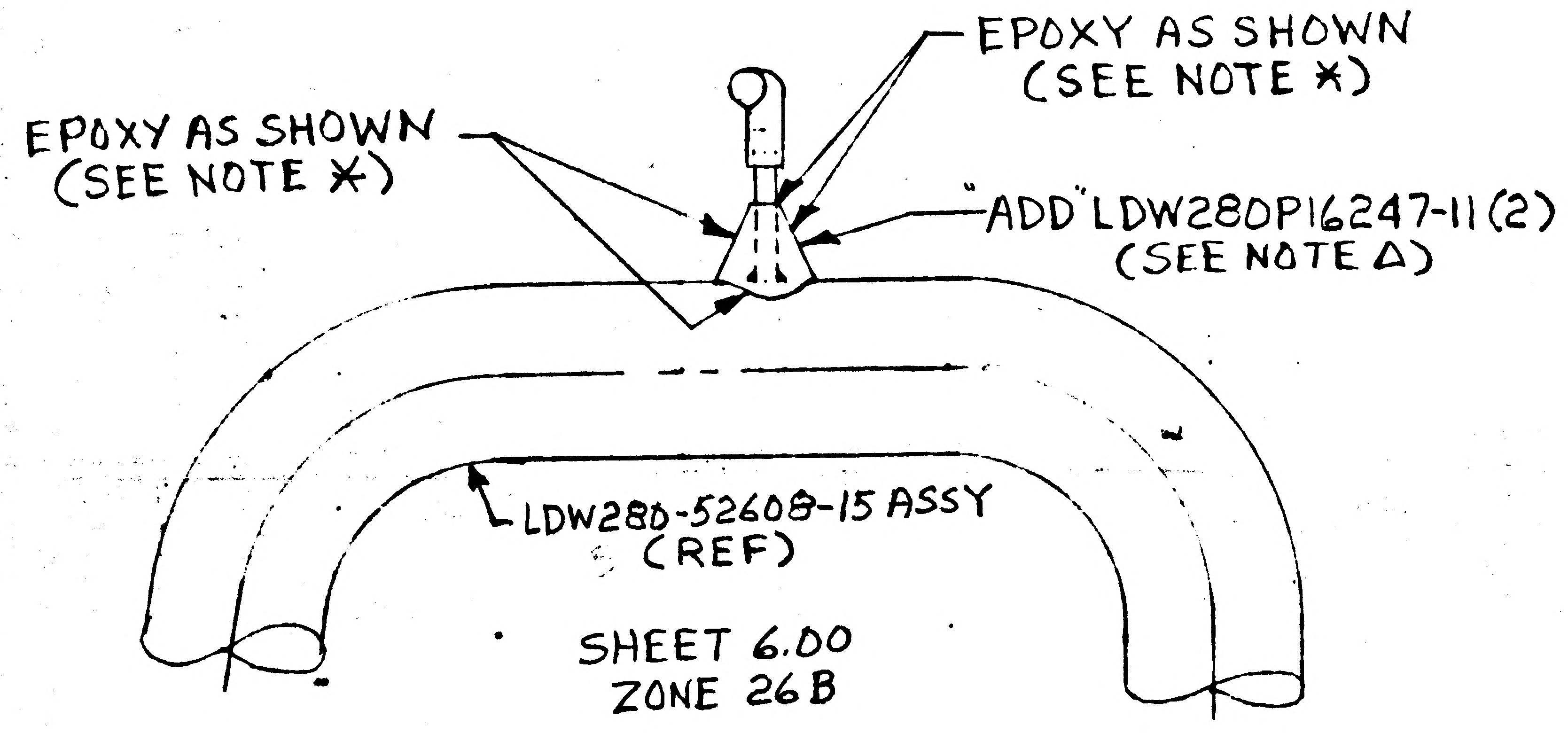

EPOXY AS SHOWN
(SEE NOTE *)
EPOXY AS SHOWN
(SEE NOTE *)
"ADD" LDW280P16247-11 (2)
(SEE NOTE Δ)
LDW280-52608-15 ASSY
(REF)
SHEET 6.00
ZONE 26 B

CORRECTED EO NUMBER E2 WAS E1
C.B. 6-26-68

LFM

ADD NOTE *
EPOXY USING EPON 934A PER LSP-14-22500
CURE RANGE OPTIONAL

ADD NOTE Δ
LDW280P16247-11 TO BE INSTALLED AFTER COLD FLOW II
1/32 MAX GAP ALLOWABLE BETWEEN PLASTIC PARTS AND/OR TUBES
BEFORE APPLYING EPOXY

Δ,* USE NEXT HIGHEST
NOTE NUMBER

THIS IS AN ORIGINAL E.O.

DETAIL SPEC REQ		CL II ENGRG CHG		CL I ENGRG CHG	✓ LCD 2935 PK6 2	(5)

REASON FOR EO: ADDITIONAL SUPPORTS FOR HIGH POINT BLEEDS

DESCRIPTION OF EO: ON-5 INSTL IN FIELD & B/M ADDED LDW280P16247-11 (4 REQD) ADDED NOTES Δ & *

GAEC EO RELEASE: C JK 6/26

MODEL	PROCURING ACTIVITY NO.	GAEC UNIT NO.	SUB CONTR UNIT NO.
LM	LFM-184	LM2 (32)	

DRAWING CHANGE REQD		DISPOSITION OF PARTS	
✓		✓	
REVISE DWG	RECORD EO	REWORK	SCRAP

APPROVED BY	JAS			JW	WJH		JaP	Jm	
DATE	4/16/68			4/17/68	4/19/68		4/19/68	6-20-68	
S	VDI	SUPPORT	RELIAB GROUP	GROUP LEADER	STRESS GROUP	LIAISON ENGRG	PROJ ENGRG	~~GOVT~~	

PRIORITY: C
DRAWING TITLE: LINES INSTL PROPULSION & HELIUM PRESS SYST D/S
DRAWING NO.: LDW280-52608
EO NO.: E2

ISSUED BY: 4-29-68 J. Bohun X1392
SECTION: Equip Lines (VDI)
GROUP NO. 332
PL 25

01

NAS 9-1100

GRUMMAN AIRCRAFT ENGINEERING CORP.
CODE IDENT NO. 26512
ENGINEERING ORDER

ENG 32.1 REV 3-65

DWG. NO. LDW280-52608
EO NO. E3
CONTROL INFO NO. LDW280B4279

THIS E.O. CANCELS E.O. E2

LFM

DETAIL SPEC REQ		CL II ENGRG CHG		CL I ENGRG CHG	✓	LCD2935 PKG 2	(5)

REASON FOR EO: NO REQUIREMENTS NEEDED

DESCRIPTION OF EO: CANCELED EO E2.

(E) GAEC EO RELEASE: C
JK 7/8/8

MODEL	EFFECTIVITY E1 ~~PROCURING ACTIVITY~~ NO.	GAEC UNIT NO.	SUB CONTR UNIT NO.
LM	LFM*184	LM2(32)	

DRAWING CHANGE REQD: REVISE DWG	RECORD EO	DISPOSITION OF PARTS: REWORK	SCRAP
✓			✓

	VDI	SUPPORT	RELIAB. GROUP	GROUP LEADER	STRESS GROUP	LIAISON ENGRG	PROJ ENGRG	
APPROVED BY					w/lt			Bauman
DATE	6/28/68			6/28/68	7/1/68		7/1/68	7-8-68

PRIORITY	DRAWING TITLE	DRAWING NO.	EO NO.
C	LINES INSTL PROPULSION & HELIUM PRESS SYS D/S	LDW280-52608	E3

7/3/68
ISSUED BY J. Bohun X1392 SECTION Equip Lines (VDI) GROUP NO. 332 PL 25

01 NAS 9-1100

LDW280-52609 A

MODEL OR END ITEM	NEXT ASSY	MODULE OR SER NO.	REQD PER MODULE OR END ITEM
LM	LDW280-52508	LM-2(32)	1 EA
PART NO. LDW280-52609-1&-3		GAEC SCH NO. 50-1	

(5)

SH REV STATUS: FOR DESCRIPTION OF REV SEE SUBQ SH

SHEET	1,00	2.00	3.00	4.00	1.10				
REV	A	A		A	A				
SHEET									
REV									
SHEET									
REV									

LAST SECT LTR USED	C	GRUMMAN REL INFO. A	
LAST DASH NO. USED	-3	PRIM NO.	VK(001)
		320	MP-1A-12/28/

UNLESS OTHERWISE SPECIFIED DIMENSIONS ARE IN INCHES.
TOLERANCE UNLESS SPECIFIED
FRACTIONS - DECIMALS - ANGLES
~ ~ ~

ORIG DWG AUTH
DETAIL SPEC REQUIREMENT
CLASS II ENGRG CHANGE
CLASS I ENGRG CHANGE

CONTRACT NO. NAS 9-1100
LINE ITEM #5
DOCUMENTATION TYPE II

DRAWN BY	A.V. PURVINS 9.16.66		
LAYOUT BY	J. BOHUN		
CHECKED BY			
GR. LEADER	J Wolf 9/17/66		
V.D.I	9/19		
STRUCTURES	9/20/66	PROJ ENGR	R.M. Carbee 9-21
STRUCTURES	9/29	REL GROUP	Botti 10-4-66
WEIGHTS	S. Albanese 9/29		

GRUMMAN AIRCRAFT ENGRG CORP
BETHPAGE, L. I., NEW YORK

LINES INSTALLATION
ENVIRONMENTAL & CONTROL SUBSYSTEM
DESCENT STAGE

SIZE	CODE IDENT NO.		
B	26512	LDW280-52609	A
SCALE	NONE	SHEET 1.00 OF 5	

ENG 77.1 12-65

01

NAS 9-1100

REVISIONS

CHANGE LTR	ITEM NO.	SHEET NO.	ZONE	GRUMMAN INFO ONLY	DET SPEC	CLASS I	CLASS II	ENGRG ORDER	DESCRIPTION	EFFECTIVITY	DISPOSITION OF EXISTING PARTS		CHANGED BY AND DATE	ENGRG APPD	GOVT APPD
											REWORK	SCRAP			
		1.00							ADDED SHT 1.10 SH 1 OF 5 WAS SH 1 OF 4						
A	1	4:00 2.00	5A	4			✓	A1	ON-3 INSTL -0630HP-5 WAS -0300HP-5	LM2(32	✓		R. CARLOCK 12/14/67		
	2	4.00 2.00	7A					A2	ON-1 INSTL ADDED: LSC269-119-6 (2), LSC269-124-6 (2), ON-3 INSTL ADDED: LSC269-119-5 (1) LSC269-124-5 (1)						
	3			3				A3	CANCELLED BY A8						
	4						✓	A4	CANCELLED BY A8						
	5							LEO 280-708 LCD 1961	CANCELLED BY EO A7 (REF LEO 280-770)						
	6	4.00 2.00	3B 6C					A6 LCD 1078 (CCA 566)	ON-1 INSTL ADDED, RELOCATED & REMOVED CLAMPS IN ACCORDANCE WITH LPC 280-21						
	7					✓		LEO 280-770 LCD 1961	CANCELS EO A5 (REF LCA 280-708)						
	8							A8 LCD 2223 (CCA 745)	CANCELS EO A3 & EO A4						
	9	4.00 2.00	3B					A9 LCD 2223	ON-1 INSTL RELOCATED CLAMPS (2). ② DELETED LDW280-17389-024 ECW4.						

FOR CONTINUATION OF REVISIONS SEE SHEET ______

GRUMMAN AIRCRAFT ENGRG CORP, BETHPAGE, L. I., NEW YORK

SIZE	CODE IDENT NO.		
B	26512	LDW280-52609	A ②
SCALE NONE		SHEET 1.10	

ENG 77.3 5-66

01 NAS 9-1100

C.L.	QTY PER ASSEMBLY				-3	-1	CODE IDENT	PART NO.	I&T	NOMENCLATURE OR DESCRIPTION	MATERIAL	GOVT SPEC	COML SPEC	STOCK SIZE	PROCESS SYM	FINISH NO.	ZONE
					1			LSC269-124-5		UNION							
					1			LSC269-119-5		NUT							
A					8	34		AN960D8L	E	WASHER	STD. PART						
↑						18		GC500J-D6T	E	CLAMP	↑						
					8			GC500J-D5T	E	CLAMP							
↓						16		GC500J-D4T	E	CLAMP	↓						
A					8	34		GB511J-08-2	E	BOLT	STD. PART.						
						2		LSC269-119-6		NUT							
N						1		LSC269-131-4	E	TEE	SEE NOTE 1						
↑						1		LSC269-118-10	↑	SEAL	↑						
						9		LSC269-118-6		↑							
					4			LSC269-118-5	↓	↓	↓						
						8		LSC269-118-4	E	SEAL	SEE NOTE 1						
						2		LSC269-124-6		UNION							
								LDW280-17389									
						1		↑ -025ECW-4	E	TUBE ASSY	SEE DWG						
									↑	↑	↑						
						1		-023ECW-4									
						1		-022ECW-4									
						1		-021ECW-4									
						1		-020N-6									
					1			-0630HP 5									
					1			-0340LP-5									
					1			-0280LP-5									
						1		-037ECC-6									
						1		-036ECC-6									
↓						1		-035ECC-6	↓	↓	↓						
N						1		↓ -032ECC-6	E	TUBE ASSY	SEE DWG						
								LDW280-17389									
								LDW280-52609-3	E	LINES INSTL							
								LDW280-52609-1	E	LINES INSTL.							

C.L. CLEANLINESS LEVEL

SYM OR NO.	PROCESS OR FINISH	GRUMMAN SPEC OR MILITARY SPEC	SYM OR NO.	PROCESS OR FINISH	GRUMMAN SPEC OR MILITARY SPEC	SYM OR NO.	PROCESS OR FINISH	GRUMMAN SPEC OR MILITARY SPEC

I & T: IDENTIFICATION AND TRACEABILITY IN ACCORDANCE WITH : NONE

GRUMMAN AIRCRAFT ENGRG CORP, BETHPAGE, L. I., NEW YORK

SIZE	CODE IDENT NO.		
B	26512	LDW280-52609	A

SCALE NONE

SHEET 2.00

ENG 77.2 7-65

01

NAS 9-1100

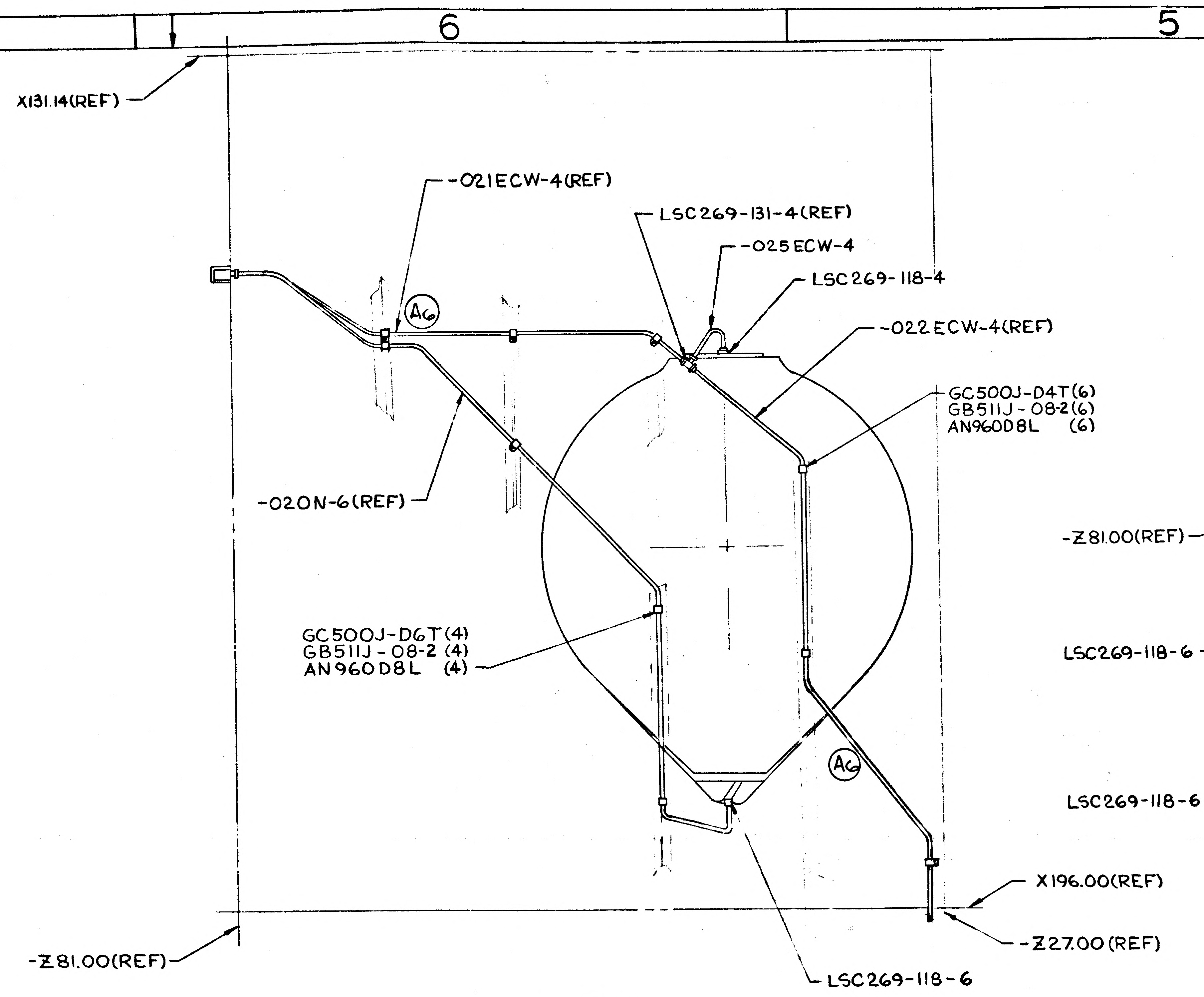
X131.14(REF)
-021ECW-4(REF)
LSC269-131-4(REF)
-025ECW-4
LSC269-118-4
-022ECW-4(REF)
GC500J-D4T(6)
GB511J-08-2(6)
AN960D8L (6)
-020N-6(REF)
GC500J-D6T(4)
GB511J-08-2 (4)
AN960D8L (4)
A6
A6
X196.00(REF)
-Z27.00(REF)
-Z81.00(REF)
LSC269-118-6

VIEW B-B

B

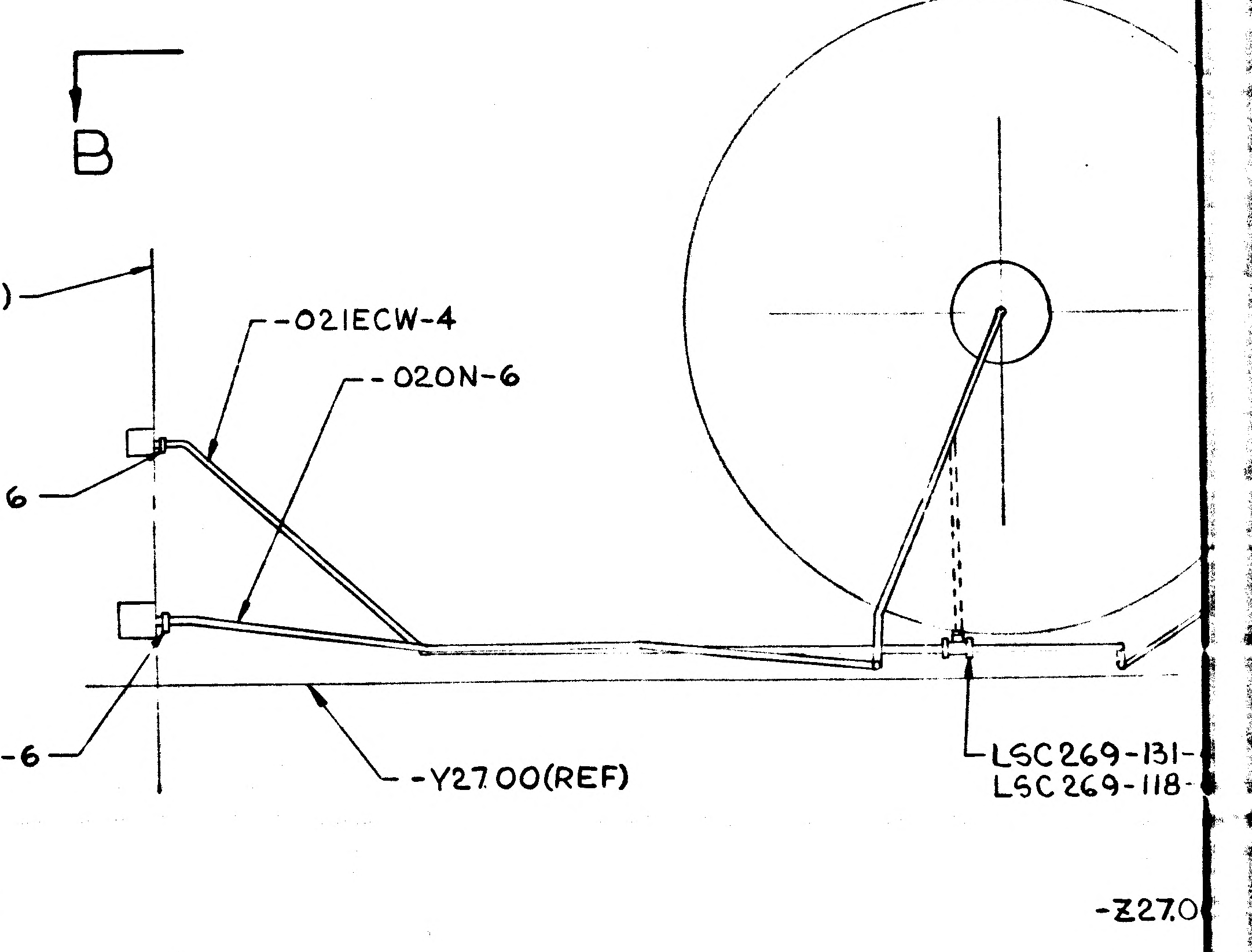
-Z81.00(REF)
-021ECW-4
-020N-6
LSC269-118-6
LSC269-118-6
-Y27.00(REF)
LSC269-131-
LSC269-118-
-Z27.0

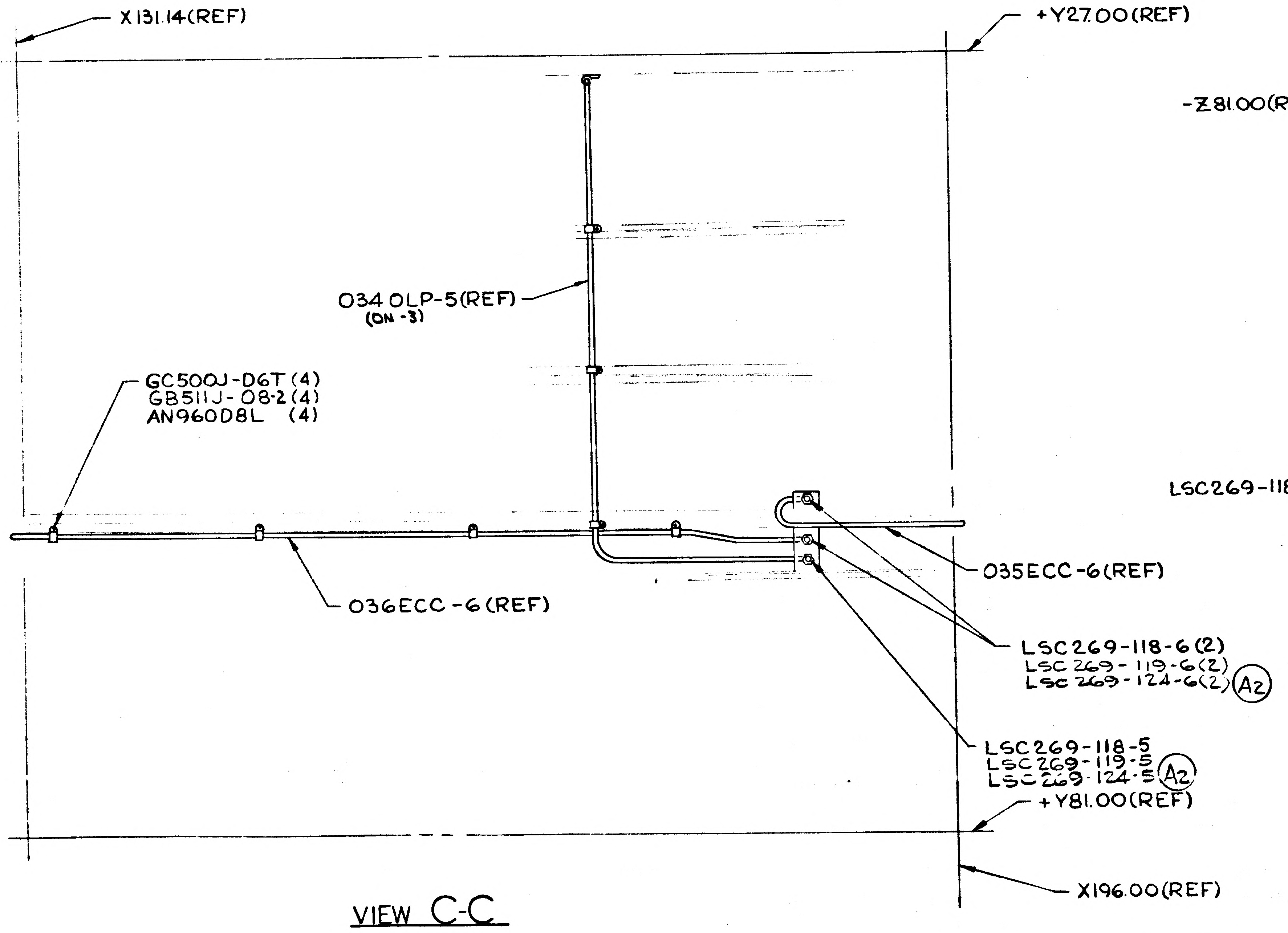
X131.14(REF)
+Y27.00(REF)
034OLP-5(REF)
(ON-3)
GC500J-D6T(4)
GB511J-08-2(4)
AN960D8L (4)
035ECC-6(REF)
036ECC-6(REF)
LSC269-118-6(2)
LSC269-119-6(2)
LSC269-124-6(2)
A2
LSC269-118-5
LSC269-119-5
LSC269-124-5
A2
+Y81.00(REF)
X196.00(REF)

VIEW C-C

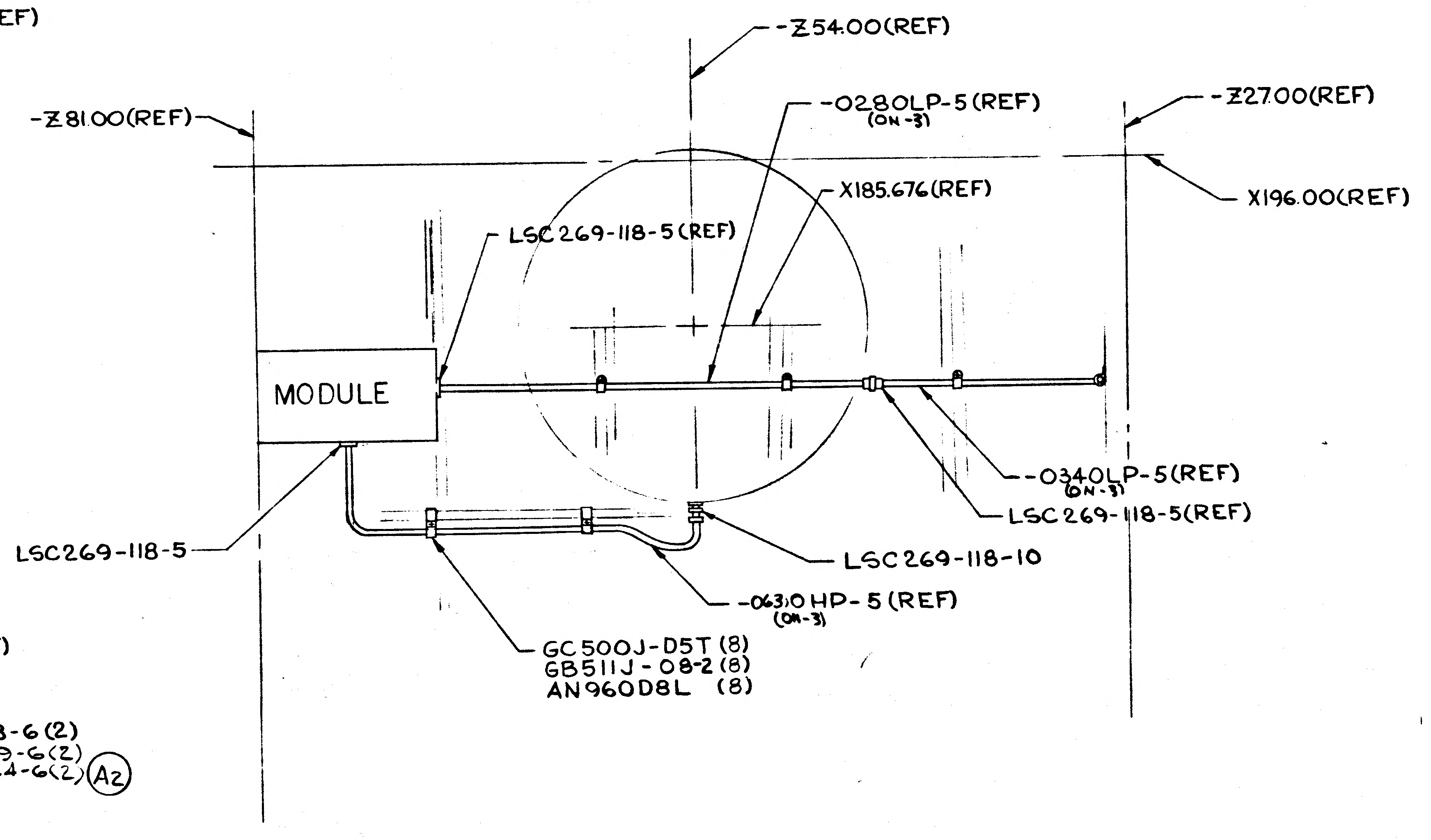
-Z54.00(REF)
-Z81.00(REF)
-028OLP-5(REF)
(ON-3)
-Z27.00(REF)
X185.676(REF)
X196.00(REF)
LSC269-118-5(REF)
MODULE
-034OLP-5(REF)
(ON-3)
LSC269-118-5(REF)
LSC269-118-5
LSC269-118-10
-063OHP-5(REF)
(ON-3)
GC500J-D5T(8)
GB511J-08-2(8)
AN960D8L (8)

VIEW A-A

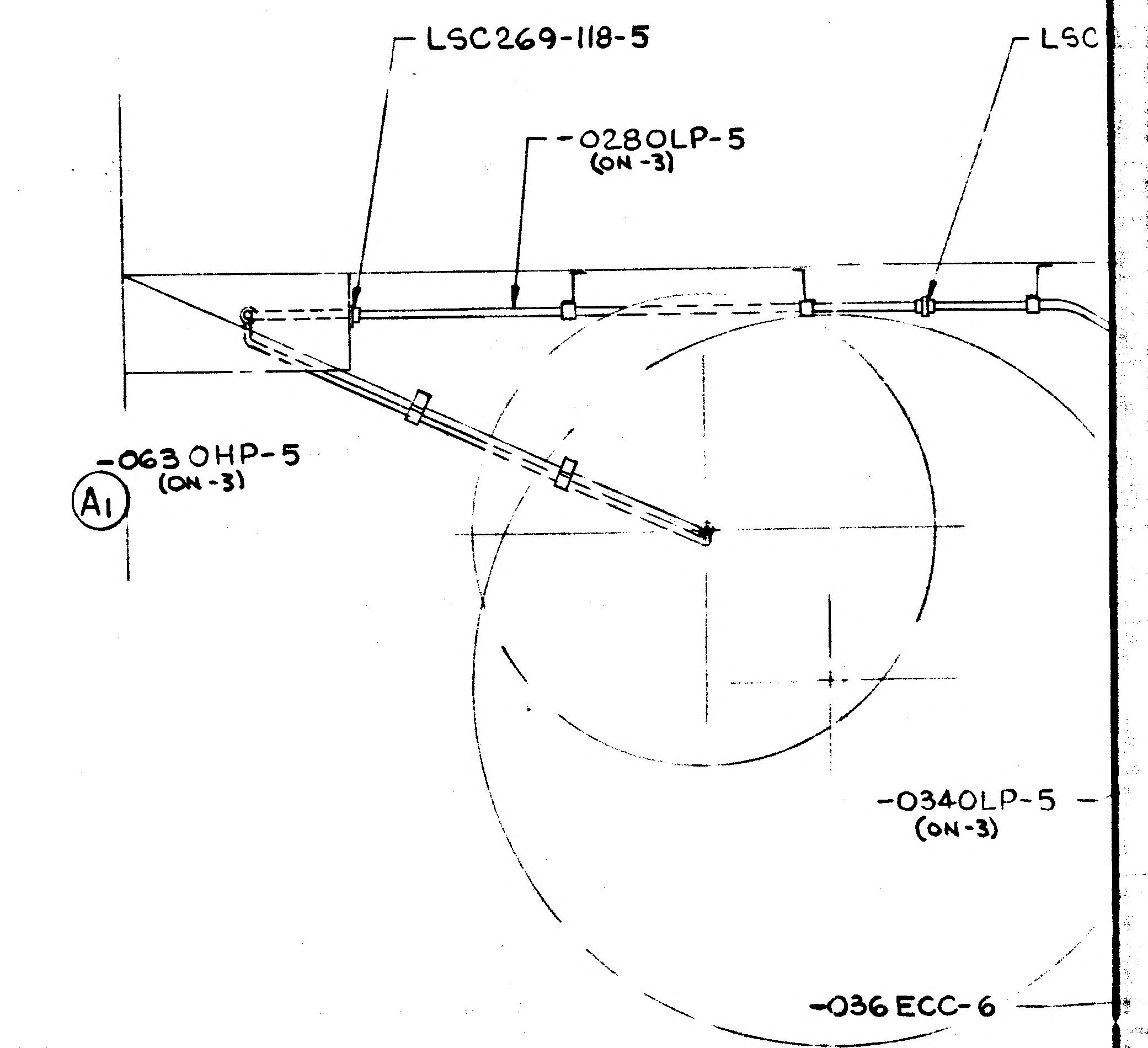
LSC269-118-5
LSC
-028OLP-5
(ON-3)
-063OHP-5
(ON-3)
A1
-034OLP-5
(ON-3)
-036ECC-6

A

01/02

NAS 9-1100

CODE IDENT NO 26512	
LDW280-52609 A	SH 4

2/2

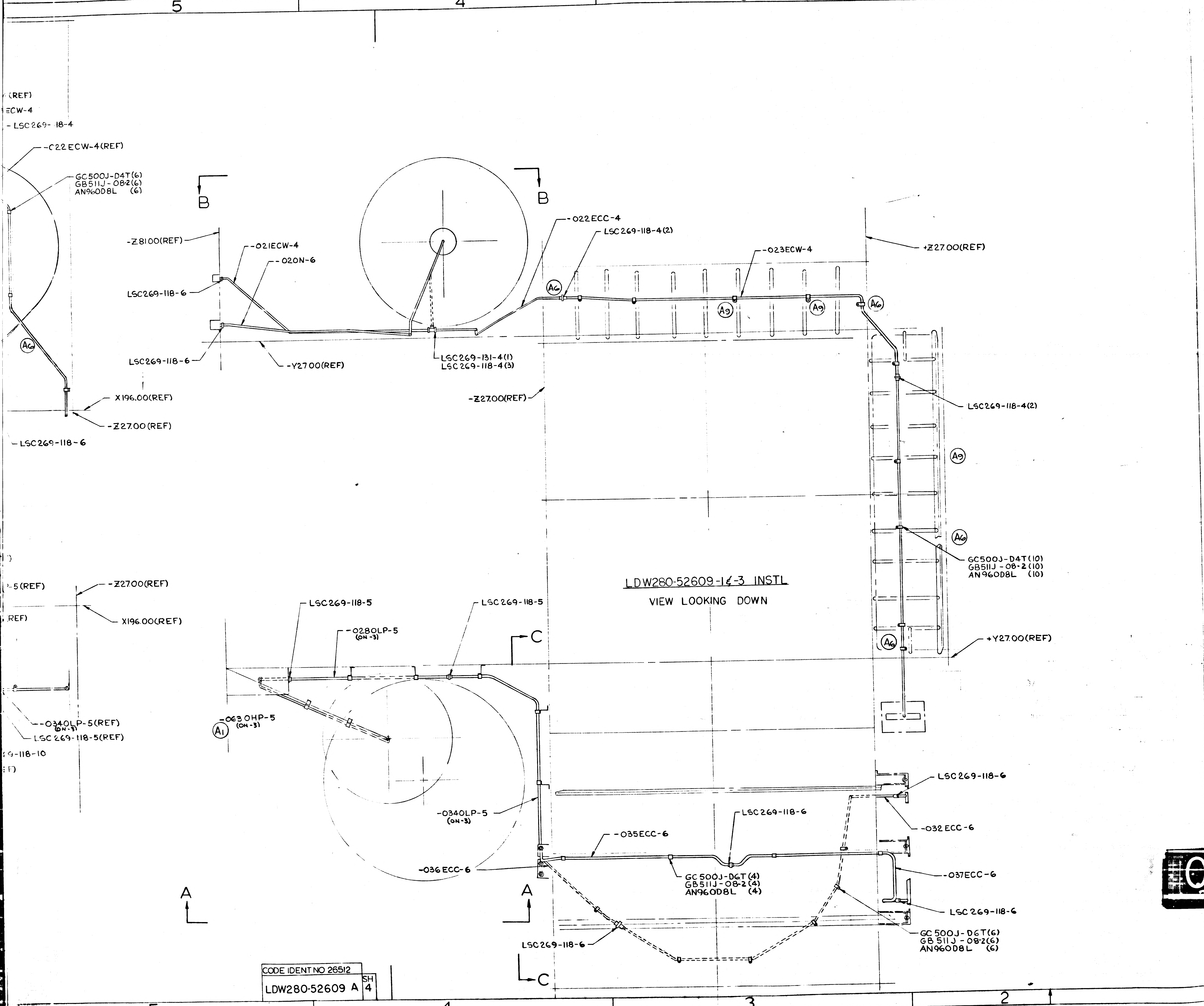
(REF)
ECW-4
- LSC269- 18-4
-C22 ECW-4(REF)
GC500J-D4T(6)
GB511J-08-2(6)
AN960D8L (6)
A6
X196.00(REF)
-Z27.00(REF)
- LSC269-118-6
B
B
-Z81.00(REF)
-021ECW-4
-020N-6
LSC269-118-6
LSC269-118-6
-Y27.00(REF)
LSC269-131-4(1)
LSC269-118-4(3)
-Z27.00(REF)
-022ECC-4
LSC269-118-4(2)
-023ECW-4
A6
A9
A9
A6
+Z27.00(REF)
LSC269-118-4(2)
A9
A6
GC500J-D4T(10)
GB511J-08-2(10)
AN960D8L (10)
A6
+Y27.00(REF)
-5(REF)
REF)
-Z27.00(REF)
X196.00(REF)
LSC269-118-5
-028OLP-5
(ON-3)
LSC269-118-5
C
-034OLP-5(REF)
(ON-3)
LSC269-118-5(REF)
9-118-10
F)
A1
-063OHP-5
(ON-3)
-034OLP-5
(ON-3)
-036ECC-6
A
A
C
-035ECC-6
LSC269-118-6
GC500J-D6T(4)
GB511J-08-2(4)
AN960D8L (4)
LSC269-118-6
-032ECC-6
-037ECC-6
LSC269-118-6
GC500J-D6T(6)
GB511J-08-2(6)
AN960D8L (6)
LSC269-118-6
C
5
4
3
2
1
C
B
A

LDW280-52609-1&-3 INSTL

VIEW LOOKING DOWN

MANUFACTURING OPERATIONS

UNLESS OTHERWISE SPECIFIED
NOTES CHECKED √ APPLY TO THIS DWG.

PART NUMBER
AND ALL OTHER MARKINGS
IN REGION MARKED ☒
USE BOTH SIDES IF NECESSARY.

FILLET AND INSIDE CORNER
RADII TOLERANCES
.016R TO .062R ± .010
.063R TO .250R ± .015
OVER .250R ± .030

DEPTH SHOWN FOR TAPPED
HOLES IS FULL THDS. 2-3 IMP THDS.
BEYOND PERMISSIBLE.

EXTERNAL THREAD LENGTH
SHOWN INCLUDES
2 IMPERFECT THREADS MAX.

DO NOT CADMIUM PLATE & PAINT
HOLES OR SURFACES MARKED
WITH DOUBLE ASTERISK.

MISMATCH STEP OF ± .005
PERMISSIBLE DUE TO CHANGE
OF CUTTERS AT INSIDE
INTERSECTING SURFACES.

DIAMETERS MARKED
MUST BE CONCENTRIC WITHIN
FULL INDICATOR
READING

HOLES MUST BE KEPT FREE OF
CHROME PLATING SOLUTION.

ALL DIMENSIONS SHOWN TO BE MET
AFTER CADMIUM PLATING.
THICKNESS OF PLATE .0003 MIN.
TO .0005 MAX. MIN. THICKNESS TO
BE .0002 ON THREADED AREAS.
NO ALLOWANCE FOR PLATING IN
HOLES

125 √ SURFACE ROUGHNESS
INCLUDING REAMED HOLES
PER MIL-STD-10

200 √ FOR ALL DRILLED HOLES

REMOVE ALL BURRS.
BREAK ALL EDGES .015-.031

INSPECTION INFORMATION
MINIMUM PERMISSIBLE
AVERAGE EDGE DISTANCE
MARKED IS

SYMBOL √ DENOTES SURFACE
TO BE MACHINED

UNLESS OTHERWISE SPECIFIED
TOLERANCE ON FLANGES IS ± 1/32

LENGTHS OF AN, NAS & MS AL ALY
RIVETS SHORTER THAN 1 INCH ARE
NOT SPECIFIED.

TOLERANCE ON LOFTED
DELINEATIONS IS

DWG SIZE 34 X 81

PRINTING INFO ONLY
FULL SIZE SHEET AREA (36 X 93)= 23.25 SQ. FT.
1/2 SIZE SHEET AREA (1/4 OF FULL)= 5.81 SQ. FT.

PRINT TRIM LINE

LDW280-52609A

LDW280-52609A

02/02

NAS 9-1100

CODE IDENT NO 26512
LDW280-52609 A SH 4

GRUMMAN AIRCRAFT ENGRG CORP., BETHPAGE, L. I., NEW YORK

MODEL OR END ITEM	SIZE	CODE IDENT NO.		
LM	J	26512	LDW280-52609	A
	SCALE		SHEET 4.00	

NOTES:

1. COMMERCIAL PARTS, SEE SPECIFICATION CONTROL DWG BEFORE ORDERING.
2. SUBSTITUTION OF NAS1132V AND NAS1133V SCREWS FOR THE GB511J-08 AND GB511J-3 BOLTS IS PERMISSABLE.
3. TUBE NUMBERS ARE DASH NUMBERS OF DWG LDW280-17389
4. TUBE ASSEMBLIES AND FITTINGS SHALL BE CLEANED TO LEVEL "N" OF LSP14-0011 PRIOR TO INSTL. AND LEVEL "E" ON FINAL INSTL. EXCEPT OXYGEN SYSTEM (-3) WHICH SHALL MAINTAIN LEVEL "N".
5. ADD DUPONT PR240AC LUBRICANT ON ALL THREAD FITTINGS,
6. GAMAH CONNECTIONS PER LSP14-17402.

GRUMMAN AIRCRAFT ENGRG CORP., BETHPAGE, L. I., NEW YORK

SIZE	CODE IDENT NO.	
B	26512	LDW280-52609

SCALE

SHEET 3.00

ENG 73.1 6-64

01

NAS 9-1100

ENG 32.1 REV 3-65

GRUMMAN AIRCRAFT ENGINEERING CORP.
CODE IDENT NO. 26512
ENGINEERING ORDER

DWG. NO. LDW280-52609
EO NO. A4
CONTROL INFO NO. LDW280A-5072

FOR -1 INSTL IN F/D & B/M DELETE (1) LDW280-16009-27

ADD (1) LDW280-16009-31 (CLEANLINESS LEVEL "N")

5

DETAIL SPEC REQ ☐	CL II ENGRG CHG ☒	CL I ENGRG CHG ☐	

REASON FOR EO: REDESIGN OF PIPING RUN IN DEADFACE AREA

DESCRIPTION OF EO: FOR -1 INSTL REMOVED (1) LDW280-16009-27
. ADDED (1) LDW280-16009-31

GAEC EO RELEASE: FR 1/24/67

MODEL	EFFECTIVITY		
	PROCURING ACTIVITY NO.	GAEC UNIT NO.	SUB CONTR UNIT NO.
LM		LM-2(32)	

DRAWING CHANGE REQD: REVISE DWG ✓ RECORD EO

DISPOSITION OF PARTS: REWORK ✓ SCRAP

APPROVED BY				SW/CHC	MJH			
DATE	1/23/67			1-23-67	1/23/67		1/23/67	1-23-67
1	VDI	SUPPORT	RELIAB. GROUP	GROUP LEADER	STRESS GROUP	LIAISON ENGRG	PROJ ENGRG	GOVT

PRIORITY: C

DRAWING TITLE: LINES INSTL ECS DESCENT STAGE

DRAWING NO. LDW280-52609

EO NO. A4

ISSUED BY Hugh Ryan 1-18-67 X 1441

SECTION VDI (EQUIP LINES)

GROUP NO. 332

PL 35

01

NAS 9-1100

ENG 32.1 REV 3-65

GRUMMAN AIRCRAFT ENGINEERING CORP.
CODE IDENT NO. 26512
ENGINEERING ORDER

DWG. NO.	LDW280-52609	EO NO.	A1
CONTROL INFO NO.	LDW280A-3362		

ON -3 INSTL IN BILL OF MATERIAL AND FIELD OF DRAWING
DELETE LDW280-17389-030 OHP -5 TUBE ASSY (1)
ADD LDW280-17389-063 OHP -5 TUBE ASSY (1)

2

DETAIL SPEC REQ	☐	CL II ENGRG CHG	☒	CL I ENGRG CHG	☐	LVC 335-392-006

REASON FOR EO	DESCRIPTION OF EO	GAEC EO RELEASE
GOX MODULE REDESIGNED	ON-3 INSTL DELETED LDW280-17389-030 OHP-5 TUBE ASSY ADDED LDW280-17389-063 OHP-5 TUBE ASSY	11/30

MODEL	EFFECTIVITY		
	PROCURING ACTIVITY NO.	GAEC UNIT NO.	SUB CONTR UNIT NO.
LM		LM-2 (32)	

DRAWING CHANGE REQD		DISPOSITION OF PARTS		APPROVED BY		—	—	—				
✓		-3		DATE	9/15/66				11/15/66		11-17-66	11-29-66
REVISE DWG	RECORD EO	REWORK	SCRAP	4	VDI	SUPPORT	RELIAB. GROUP	GROUP LEADER	STRESS GROUP	LIAISON ENGRG	PROJ ENGRG	GOVT

PRIORITY	DRAWING TITLE	DRAWING NO.	EO NO.
C	LINES INSTL ENVIRONMENTAL & CONTROL SUBSYSTEMS D/S	LDW280-52609	A1

ISSUED BY HUGH RYAN X7033 SECTION VDI (EQUIP LINES) GROUP NO. 332 PL 35

01 NAS 9-1100

GMG 22.1 REV 3-68

GRUMMAN AIRCRAFT ENGINEERING CORP.
CODE IDENT NO. 26512

ENGINEERING ORDER

DWG. NO. LDW280-52609 | EO NO. AV
CONTROL INFO NO. LDW280A-4298

FOR -1 INSTL IN F/D & B/M ADD (2) LSC 269-119-6 NUT
(2) LSC 269-124-6 UNION
FOR -3 INSTL IN F/D & B/M ADD (1) LSC 269-119-5 NUT
(1) LSC 269-124-5 UNION
} CLEANLINESS LEVEL "N"

ADD CALLOUTS IN VIEW C-C ZONE 7A.

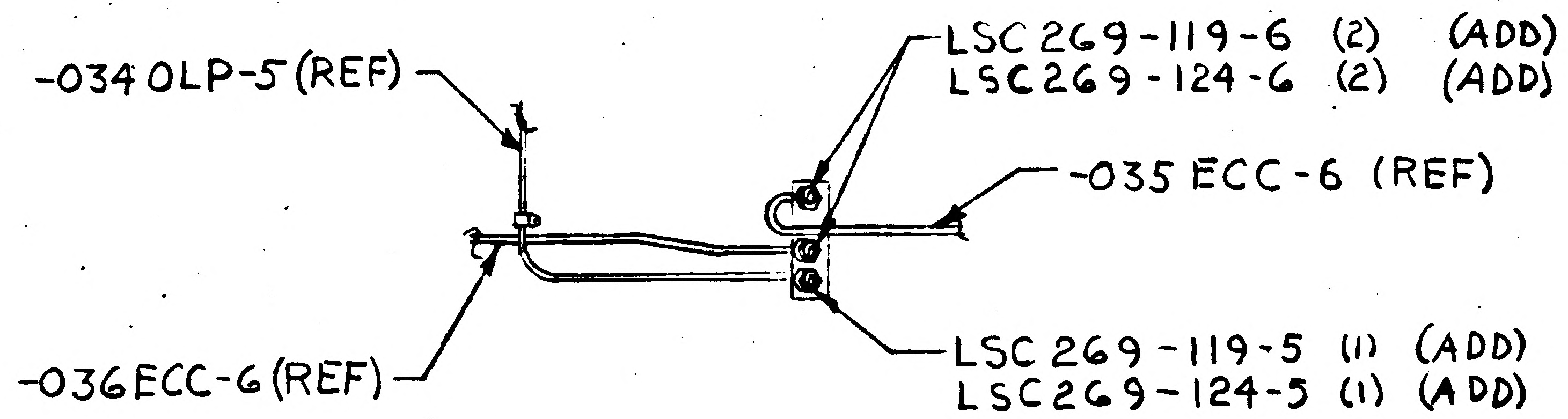

(5)

DETAIL SPEC REQ		CL II ENGRG CHG	CL I ENGRG CHG

REASON FOR EO: CALLOUTS MISSING

DESCRIPTION OF EO: FOR -1 INSTL IN F/D & B/M ADDED (2) LSC269-119-6 NUT, (2) LSC269-124-6 UNION. FOR -3 INSTL IN F/D & B/M ADDED (1) LSC269-119-5 NUT, (1) LSC 269-124-5 UNION

GAEC C EO RELEASE: 12/21

MODEL	EFFECTIVITY PROCURING ACTIVITY NO.	GAEC UNIT NO.	SUB CONTR UNIT NO.
LM		LM-2 (32)	

DRAWING CHANGE REQD		DISPOSITION OF PARTS									
REVISE DWG	RECORD EO	REWORK	SCRAP		VDI	SUPPORT	RELIAB GROUP	GROUP LEADER	STRESS GROUP	LIAISON ENGRG	PROJ ENGRG	~~GOVT~~
✓		✓		APPROVED BY	JW	—	—	—	W/H		PMC	
				DATE	12/19/66				12/20/66		12-20-66	12-21-66
				1								

PRIORITY: C
DRAWING TITLE: LINES INSTL E.C.S. DESCENT STAGE
DRAWING NO: LDW280-52609
EO NO.: AV

ISSUED BY Hugh Ryan X7033 SECTION VD1 (EQUIP LINES) GROUP NO. 332 PL 35

01 NAS 9-1100

ENG 32.1 REV 3-65

GRUMMAN AIRCRAFT ENGINEERING CORP.
CODE IDENT NO. 26512
ENGINEERING ORDER

DWG. NO. LDW280-52609		EO NO. A3
CONTROL INFO NO. LDW280A-4446		

FOR -1 INSTL IN F/D & B/M ADD (1) LDW280-16009-27 FLEX HOSE (CLEANLINESS LEVEL "N")
ADD (1) GS830G-75C24 SLEEVE (CLEANLINESS LEVEL "A")

IN GENERAL NOTES ADD NOTE △
△ SLEEVE TO BE INSTALLED AFTER TORQUING OF NUT & PRESSURE TESTING OF SYSTEM. LOCATE SLEEVE AS SHOWN & SHRINK IN PLACE. PER LSP-14-13319

ADD VIEW *-* AS SHOWN

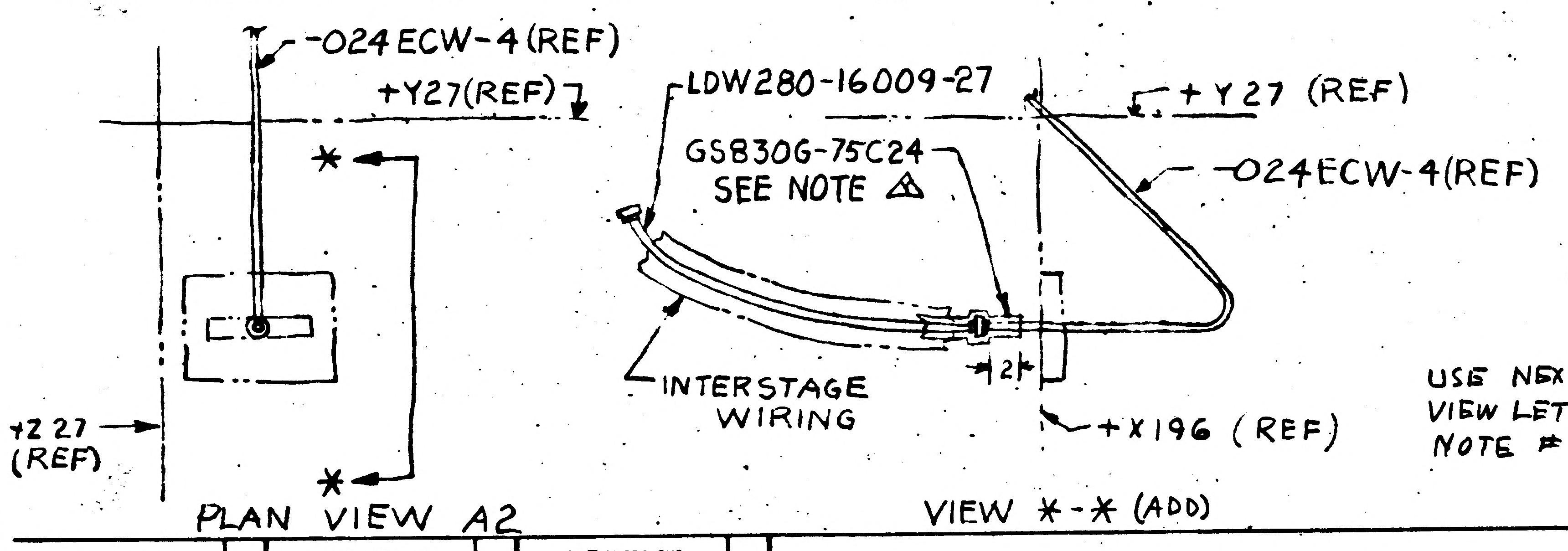

-024 ECW-4 (REF)
+Y27 (REF)
*
+Z 27 (REF)
*
PLAN VIEW A2
LDW280-16009-27
GS830G-75C24 SEE NOTE △
+Y 27 (REF)
-024 ECW-4 (REF)
INTERSTAGE WIRING
2
+X196 (REF)
VIEW *-* (ADD)

USE NEXT AVAILABLE VIEW LETTERS (*-*) & NOTE # △

DETAIL SPEC REQ		CL II ENGRG CHG		CL I ENGRG CHG		(5)

REASON FOR EO: TO SIMPLIFY ASSEMBLY

DESCRIPTION OF EO: FOR -1 INSTL IN F/D & B/M ADDED (1) LDW280-16009-27 FLEX HOSE, ADDED (1) GS830G-75C24 SLEEVE, VIEW *-* ADDED NOTE △.

GAEC EO RELEASE: ① C 12/29

MODEL	PROCURING ACTIVITY NO.	GAEC UNIT NO.	SUB CONTR UNIT NO
LM		LM-2(32)	

DRAWING CHANGE REQD		DISPOSITION OF PARTS		APPROVED BY	JW	—	—	—	WJB		RMC	
✓		✓		DATE	12/19/66				12/20/66		12-20-66	12/21/66
REVISE DWG	RECORD EO	REWORK	SCRAP	3	VD1	SUPPORT	RELIAB GROUP	GROUP LEADER	STRESS GROUP	LIAISON ENGRG	PROJ ENGRG	

PRIORITY	DRAWING TITLE	DRAWING NO.	EO NO.
C	LINES · INSTL ECS DESCENT STAGE	LDW280-52609	A3

ISSUED BY HUGH RYAN X7033 SECTION VD1 (EQUIP LINES) GROUP NO. 332 PL 35

01 NAS 9-1100

01
NAS 9-1100

ENG 32.2 REV 3-66

B

GRUMMAN AIRCRAFT ENGINEERING CORP.
CODE IDENT NO. 26512
ENGINEERING ORDER

DWG. NO. LEO280
EO NO. 708
CONTROL INFO NO. LDW280A9103

ADD THE FOLLOWING NOTE * TO THE DRAWINGS LISTED BELOW:

* BONDING TO BE INACCORDANCE WITH LSP 390-001

(* = USE NEXT AVAILABLE NOTE NUMBER)

DRAWING NUMBER	EFFECTIVITY	CHANGE NUMBER
LDW280 - 28363	LM-2(32) THRU LM-15(45)	B2
- 51365	LM-2(32) THRU LM-15(45)	A8
- 51368	LM-2(32)	A9
- 51369	LM-2(32), LM-3(33)	A3
- 52350	LM-2(32)	D7
- 52352		A5
- 52353		B2
- 52355		C1
- 52364		B6
- 52609	LM-2(32)	A5
- 53352	LM-3(33)	A9
- 53353	LM-3(33)	B5
- 53355	LM-3(33)	A7
- 53364	LM-3(33) THRU LM-15(45)	B7
- 53368	LM-3(33)	B7
- 53609	LM-3(33)	A7
- 54352	LM-4(34) THRU LM-15(45)	B6
- 54353		B2
- 54355		B5
LDW 280 - 54609	LM-4(34) THRU LM-15(45)	B7

DETAIL SPEC REQ ☐ CL II ENGRG CHG ☐ CL I ENGRG CHG ☑ LCD 1961

5

REASON FOR EO: TO UPDATE INSTL DWGS TO CURRENT BONDING REQUIREMENTS

DESCRIPTION OF EO: ADDED NOTE *

GAEC EO RELEASE: C VK 9/12/67

MODEL	PROCURING ACTIVITY NO.	GAEC UNIT NO.	SUB CONTR UNIT NO.
LM		NOTED	

DRAWING CHANGE REQD: REVISE DWG ✓ RECORD EO

DISPOSITION OF PARTS: NOT REQD (REWORK / SCRAP)

	VDI	SUPPORT	RELIAB. GROUP	GROUP LEADER	STRESS GROUP	LIAISON ENGRG	PROJ ENGRG	
APPROVED BY				JW				
DATE	9/8/67			9/8/67	9/9/67		9/11/67	9-12-67

PRIORITY: C

DRAWING TITLE: INSTL LINES ELECTRONIC & PIPING ASCENT STAGE & DESCENT STAGE

DRAWING NO.: LEO 280

EO NO.: 708

9-14-67
ISSUED BY J. DeVITA X1153 (9-7-67)   SECTION EQUIP LINES (VDI)   GROUP NO. 332   PL 25

ENG 32.2 REV 3-65

3

GRUMMAN AIRCRAFT ENGINEERING CORP.
CODE IDENT NO. 26512
ENGINEERING ORDER

DWG. NO. LDW280-52609 | EO NO. A6
CONTROL INFO NO. LDW280A9853

ON-1 INSTL-REVISE PICTURE AS SHOWN

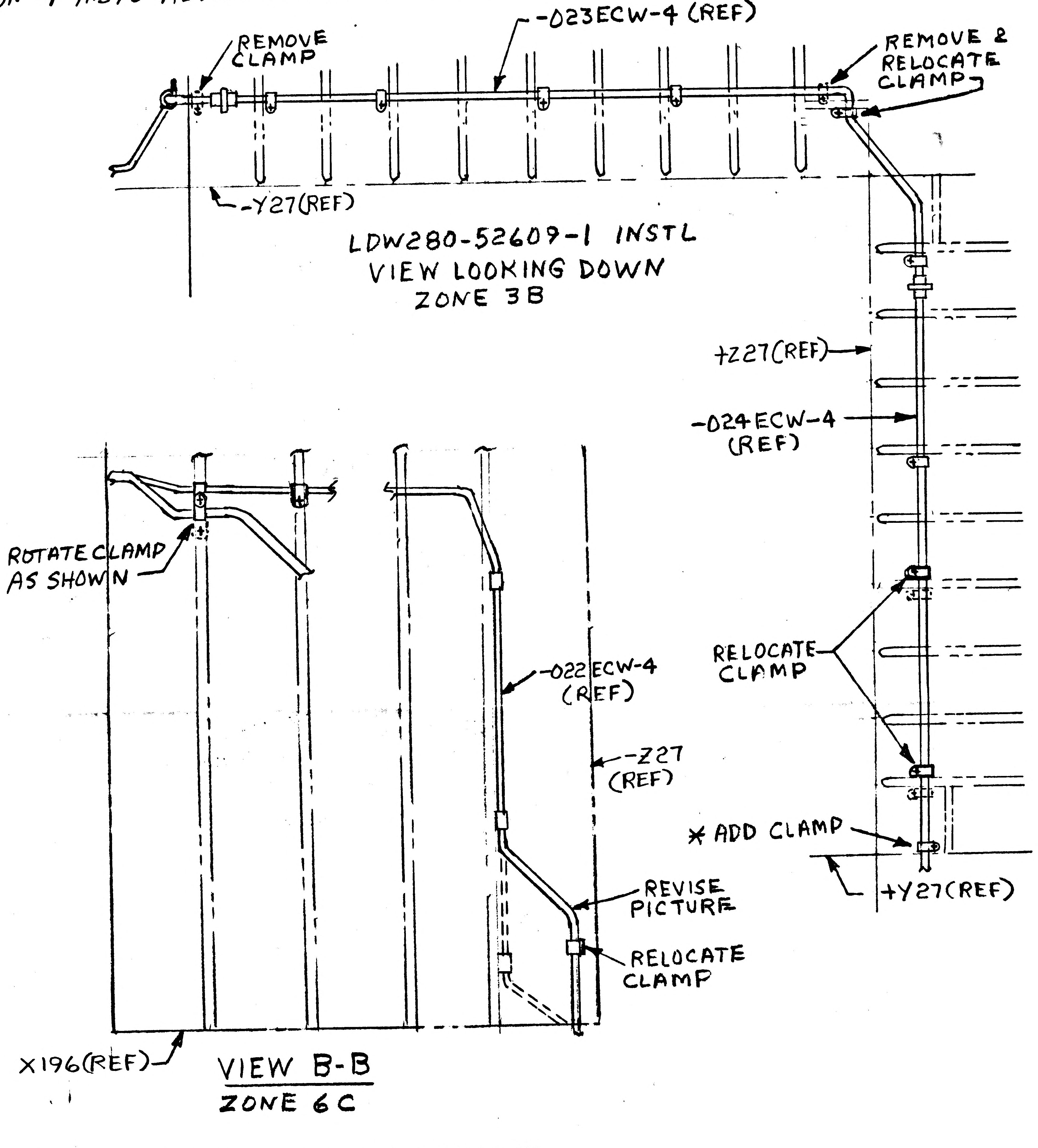

REMOVE CLAMP
-023ECW-4 (REF)
REMOVE & RELOCATE CLAMP
-Y27(REF)
LDW280-52609-1 INSTL
VIEW LOOKING DOWN
ZONE 3B
+Z27(REF)
-024ECW-4 (REF)
RELOCATE CLAMP
* ADD CLAMP
+Y27(REF)
ROTATE CLAMP AS SHOWN
-022ECW-4 (REF)
-Z27 (REF)
REVISE PICTURE
RELOCATE CLAMP
X196(REF)
VIEW B-B
ZONE 6C

* ADD GS500J CLAMPS IN ACCORDANCE WITH LPC 280-21

DETAIL SPEC REQ ☐ CL II ENGRG CHG ☑ CL I ENGRG CHG ☐ LCD 1078 (CCA 566)

5

REASON FOR EO: TO AGREE WITH INSTL OF LINES ON THE VEHICLE

DESCRIPTION OF EO: ON-1 INSTL ADDED, RELOCATED & REMOVED CLAMPS GS500J CLAMPS IN ACCORDANCE WITH LPC 280-21

GAEC EO RELEASE: 10/

MODEL	PROCURING ACTIVITY NO.	GAEC UNIT NO.	SUB CONTR UNIT NO.
LM		LM2 (32)	

DRAWING CHANGE REQD: REVISE DWG ✓ RECORD EO

DISPOSITION OF PARTS: REWORK ✓ SCRAP

		SUPPORT	RELIAB. GROUP	GROUP LEADER	STRESS GROUP	LIAISON ENGRG	PROJ ENGRG	
APPROVED BY								
DATE	10/18/67				10/18/67		10/18	10-20-67
B	VDI							

PRIORITY C

DRAWING TITLE: LINES INSTL ENVIRONMENTAL & CONTROL SUB-SYS D/S

DRAWING NO. LDW280-52609

EO NO. A6

10/23 ISSUED BY J. Bohun X1392 SECTION Equip Lines (VDI) GROUP NO. 332 PL 25

01
NAS 9-1100

ENG 32.1 REV 3-65

GRUMMAN AIRCRAFT ENGINEERING CORP.
CODE IDENT NO. 26512
ENGINEERING ORDER

DWG. NO. LED 280		EO NO. 770
CONTROL INFO NO. LDW280B0077		

PARTIAL CANCELLATION

THIS EO CANCELS CHANGES LISTED ON LEO280-708 FOR THE FOLLOWING DRAWINGS: ONLY

CANCELLED CHANGE NO.	DRAWING NUMBER	EFFECTIVITY	CANCELLING CHANGE NO.
A5	LDW280-52352	LM-2(32)	A9 ✓
A5	-52609	LM-2(32)	A7 ✓
A8	-51365	LM-2(32) THRU LM-15(45)	B1
B6	-52364	LM-2(32)	B7
A9	-51368	LM-2(32)	B1
A3	LDW280-51369	LM-2(32), LM-3(33)	A4

DETAIL SPEC REQ		CL II ENGRG CHG		CL I ENGRG CHG	✓ LCD 1961											5
REASON FOR EO: BONDING NOTE NOT REQD					DESCRIPTION OF EO: CANCELS NOTED CHG ON LEO280-708.											Ⓡ GAEC C EO RELEASE VK 10/26/67
MODEL	EFFECTIVITY			DRAWING CHANGE REQD		DISPOSITION OF PARTS		APPROVED BY	JGS							
	PROCURING ACTIVITY NO.	GAEC UNIT NO.	SUB CONTR UNIT NO.	✓		✓		DATE	10/26/67			10/26/67	10/27/67		10/28/67	10/30/67
LM		NOTED		REVISE DWG	RECORD EO	REWORK	SCRAP	E	VDI	SUPPORT	RELIAB. GROUP	GROUP LEADER	STRESS GROUP	LIAISON ENGRG	PROJ ENGRG	GOVT
				PRIORITY: C	DRAWING TITLE: LINES INSTL PIPING-ASCENT STAGE & DESCENT STAGE							DRAWING NO. LEO 280				EO NO. 770

11-2-67 ISSUED BY J. DeVITA X1153 (10-25-67) SECTION EQUIP LINES (VDI) GROUP NO. 332 PL 25

01

NAS 9-1100

ENG 32.1 REV 3-65 B

GRUMMAN AIRCRAFT ENGINEERING CORP.
CODE IDENT NO. 26512
ENGINEERING ORDER

*

DWG. NO. LDW280-52609 | EO NO. A8
CONTROL INFO NO. LDW280B0225

CANCEL EO A3 & EO A4

DETAIL SPEC REQ ☐ | CL II ENGRG CHG ☐ | CL I ENGRG CHG ☑ LCD 2223 CCA 745 (P) (5)

REASON FOR EO: DELETE H_2O LINE THROUGH CUTTER

DESCRIPTION OF EO: CANCELED EO A3 & EO A4

GAEC EO RELEASE: JK 11/2/67 C

MODEL	EFFECTIVITY: PROCURING ACTIVITY NO.	GAEC UNIT NO.	SUB CONTR UNIT NO.
LM		LM-2(32)	

DRAWING CHANGE REQD: REVISE DWG ✓ | RECORD EO
DISPOSITION OF PARTS: REWORK ✓ | SCRAP

APPROVED BY								
DATE	11/1/67			11/2/67	11/1/67		11/1/67	11-2-67
C	VDI	SUPPORT	RELIAB. GROUP	GROUP LEADER	STRESS GROUP	LIAISON ENGRG	PROJ ENGRG	

PRIORITY C
DRAWING TITLE: LINES INSTL ECS DESCENT STAGE
DRAWING NO. LDW280-52609
EO NO. A8

11-3-67
ISSUED BY HUGH RYAN X1392 11-1-67 SECTION VDI (EQUIP LINES) GROUP NO. 332 PL 25

01

NAS 9-1100

ENG 32.1 REV 3-65

GRUMMAN AIRCRAFT ENGINEERING CORP.
CODE IDENT NO. 26512
ENGINEERING ORDER

DWG. NO. LDW280-52609 | EO NO. A9
CONTROL INFO NO. LDW280B0204

ON -1 INSTL ZONE 3B

DELETE LDW280-17389-024ECW-4

RELOCATE PICTURE OF CLAMPS ON LINE LDW280-17389-023ECW-4 AS SHOWN.

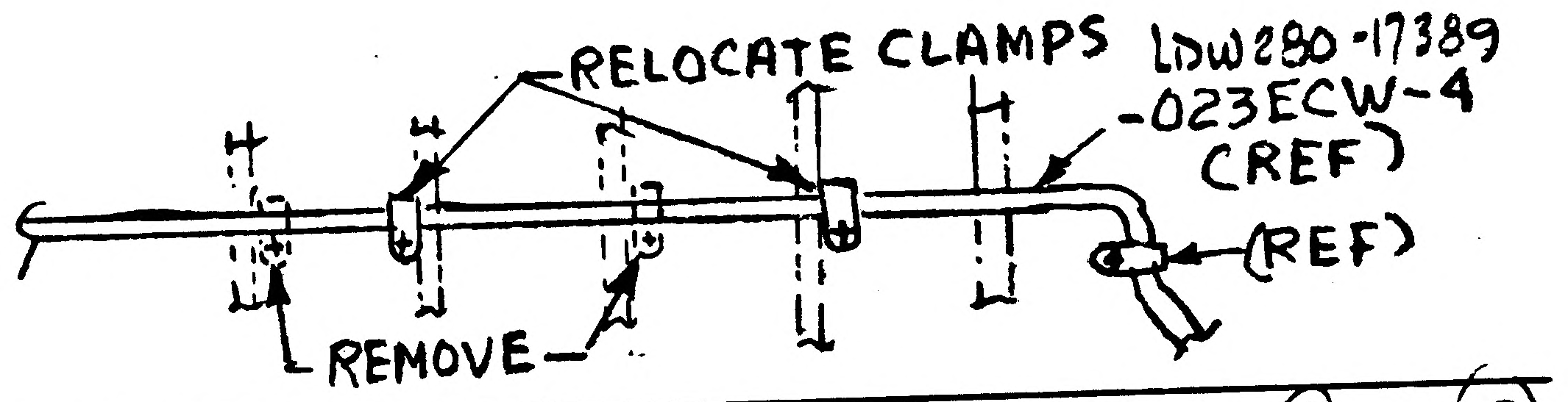

DETAIL SPEC REQ		CL II ENGRG CHG		CL I ENGRG CHG	✓ LCD2223

REASON FOR EO: DELETE H_2O LINE THROUGH CUTTER

DESCRIPTION OF EO: ON -1 ZONE 3B
DELETED LDW280-17389-024 EC W-4
RELOCATED PICTURE OF (2) CLAMPS

GAEC EO RELEASE: JK 11/2/67

MODEL	PROCURING ACTIVITY NO.	GAEC UNIT NO.	SUB CONTR UNIT NO.
LM		LM-2 (32)	

DRAWING CHANGE REQD: REVISE DWG ✓ | RECORD EO
DISPOSITION OF PARTS: REWORK ✓ | SCRAP

APPROVED BY	JAS			JW	NJM		WRB	JRL
DATE	11/1/67			11/1/67	11/1/67		11/1/67	11-2-67
H	VDI	SUPPORT	RELIAB. GROUP	GROUP LEADER	STRESS GROUP	LIAISON ENGRG	PROJ ENGRG	

PRIORITY: C
DRAWING TITLE: LINES INSTL ECS DESCENT STAGE
DRAWING NO.: LDW280-52609
EO NO.: A9

ISSUED BY HUGH RYAN X1392 10-31-67 11-3-67
SECTION VDI (EQUIPLINES) GROUP NO. 332 PL 25

01

NAS 9-1100

LDW280-52627 A

MODEL OR END ITEM	NEXT ASSY	MODULE OR SER NO.	REQD PER MODULE OR END ITEM
LM	LDW280-54509	LM-15(45)	1 EA
		LM-14(44)	1 EA
		LM-13(43)	1 EA
		LM-12(42)	1 EA
		LM-11(41)	1 EA
		LM-10(40)	1 EA
		LM-9(39)	1 EA
		LM-8(38)	1 EA
		LM-7(37)	1 EA
		LM-6(36)	1 EA
		LM-5(35)	1 EA
	LDW280-54509	LM-4(34)	1 EA
	LDW280-53509	LM-3(33)	1 EA
LM	LDW280-52509	LM-2(32)	1 EA

PART NO. LDW280-52627-1&-2

GAEC SCH NO. 50-2

WORK PKG FUNCTION NO. 110

SH REV STATUS: FOR DESCRIPTION OF REV SEE SUBQ SH

SHEET	1.00	1.10	2.00	3.00
REV	A	A	A	A

LAST SECT LTR USED B
LAST DASH NO. USED -2
GRUMMAN REL INFO A
PRIM NO. JK(001)
207 n.P-14 A-2-23-67

UNLESS OTHERWISE SPECIFIED DIMENSIONS ARE IN INCHES.
TOLERANCE UNLESS SPECIFIED
FRACTIONS - DECIMALS - ANGLES
± 1/32 ±.020 ± 1/2°
ORIG DWG AUTH
DETAIL SPEC REQUIREMENT
CLASS II ENGRG CHANGE
CLASS I ENGRG CHANGE

CONTRACT NO. NAS-9-1100
LINE ITEM
DOCUMENTATION TYPE II
DRAWN BY N.CIOFFI 1-27-67
LAYOUT BY J.STRAKOSCH 1-5-67
CHECKED BY 2-3-67
GR. LEADER 2/20/67
VEH.DES.INT
STRUCTURES WJH 2/21/67
STRUCTURES EB 2/21
WEIGHTS
RELIABILITY
THERMO
PROJ ENGR 2-23-67
REL GROUP 2-23-67

GRUMMAN AIRCRAFT ENGRG CORP
BETHPAGE, L. I., NEW YORK

SHIELD INSTL
DESCENT STAGE AFT INTERSTAGE
METEOROID PROTECTION

SIZE B
CODE IDENT NO. 26512
LDW280-52627 A
SCALE NONE
SHEET 1.00 OF 4

ENG 77.1 12-65

01

NAS 9-1100

REVISIONS FOR CONTINUATION OF REVISIONS SEE SHEET ______

CHANGE LTR	ITEM NO.	SHEET NO.	ZONE	GRUMMAN INFO ONLY	DET SPEC	CLASS I	CLASS II	ENGRG ORDER	DESCRIPTION	EFFECTIVITY	DISPOSITION OF EXISTING PARTS		CHANGED BY AND DATE	ENGRG APPD	GOVT APPD
											REWORK	SCRAP			
A	1	1.00, 1.10, 2.00 & 300					✓	EO A1 ②	EO A1 INITIAL DRAWING RELEASE. INSTLS MADE PER EO. GB	LM-2 THRU LM-15	NOT	REQD	N.CIOFFI 1-29-67	2-23-67	2.23

CHG APPROVED	LTR	~~GROUP~~ LDR	VEH.DES.INT	STRUCTURES	STRUCTURES	WEIGHTS	RELIABILITY					
	A		2/20/67	2/21/67								

GRUMMAN AIRCRAFT ENGRG CORP., BETHPAGE, L. I., NEW YORK

SIZE	CODE IDENT NO.		
B	26512	LDW280-52627	A
SCALE NONE		SHEET 1.10	

ENG 77.16 3-66

01

NAS 9-1100

C.L	QTY PER ASSEMBLY -2	QTY PER ASSEMBLY -1	PART NO.	I&T	CODE IDENT	NOMENCLATURE OR DESCRIPTION	MATERIAL	GOVT SPEC	COML SPEC	STOCK SIZE	PROCESS SYM	FINISH NO.	ZONE
			MS20470-B3	E		RIVET	STD PART						
	AS REQD	AS REQD	GT835P-8	E		POLYIMIDE TAPE	GRUMMAN STD						
	1		LDW280-18236-14	E		COVER	SEE DWG						
		1	LDW280-18236-13	E		COVER	↕						
	1		LDW280-18236-12	E		PLATE	↕						
		1	LDW280-18236-11	E		PLATE	SEE DWG						
C			LDW280-52627-2	E		SHIELD INST'L							
C			LDW280-52627-1	E		SHIELD INST'L							
▨													

C.L. = CLEANLINESS LEVEL PER LSP 14-0011.

SYM OR NO.	PROCESS SYM OR FINISH NO.	GRUMMAN SPEC OR MILITARY SPEC	SYM OR NO.	PROCESS SYM OR FINISH NO.	GRUMMAN SPEC OR MILITARY SPEC	SYM OR NO.	PROCESS SYM OR FINISH NO.	GRUMMAN SPEC OR MILITARY SPEC

I&T: IDENTIFICATION AND TRACEABILITY IN ACCORDANCE WITH NONE

GRUMMAN AIRCRAFT ENGRG CORP., BETHPAGE, L. I., NEW YORK

SIZE B
CODE IDENT NO. 26512
LDW280-52627
A
SCALE NONE
SHEET 2.00

ENG 77.2 5-64

01

NAS 9-1100

NOTE:
1. TAPE DOWN EDGES OF SHIELD TO EXISTING STRUCTURE WITH GT835P-8 TAPE AS REQD.

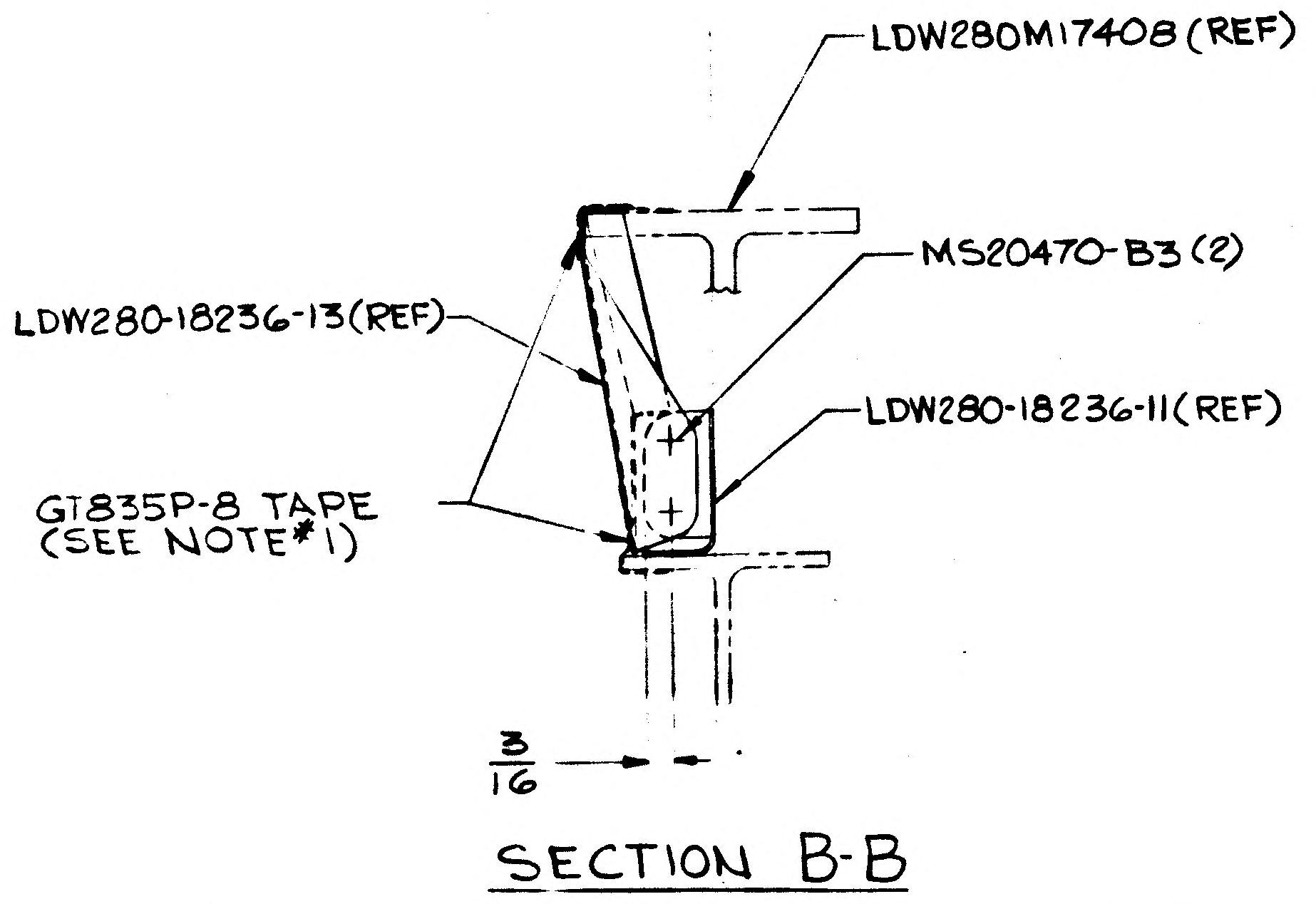

LDW280M17408 (REF)
MS20470-B3 (2)
LDW280-18236-13 (REF)
LDW280-18236-11 (REF)
GT835P-8 TAPE (SEE NOTE #1)
3/16

SECTION B-B

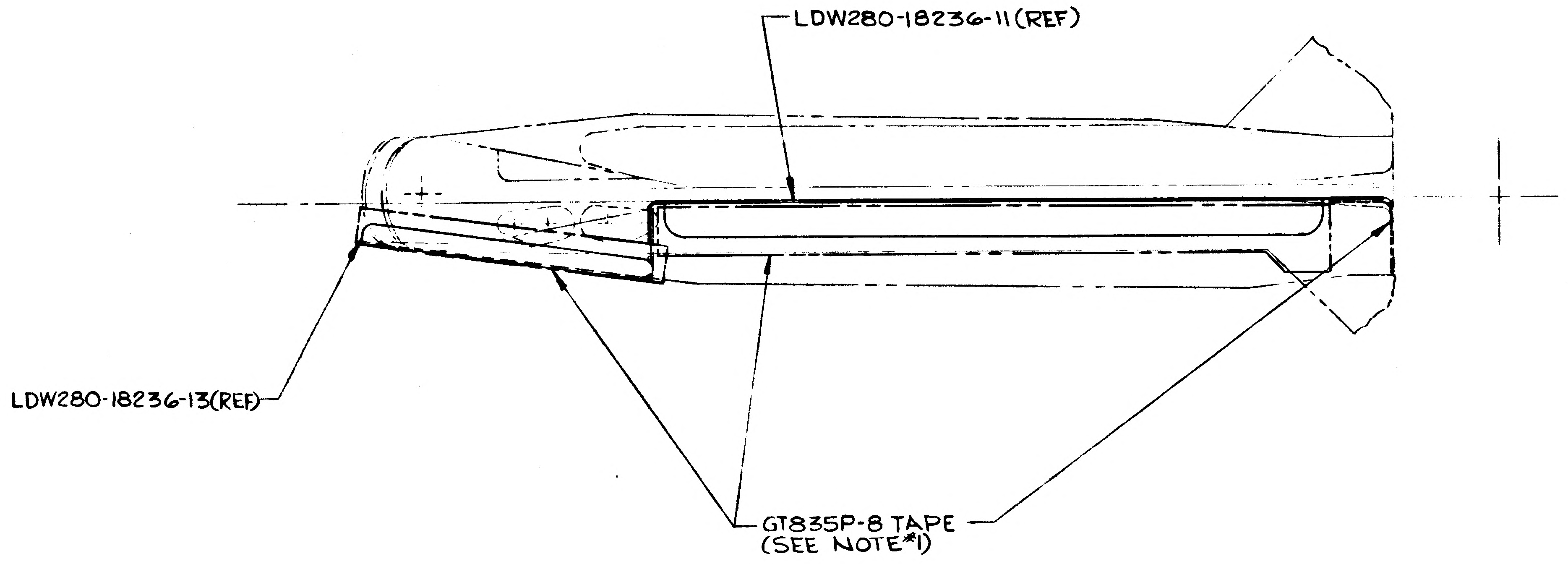

LDW280-18236-11 (REF)
LDW280-18236-13 (REF)
GT835P-8 TAPE (SEE NOTE #1)

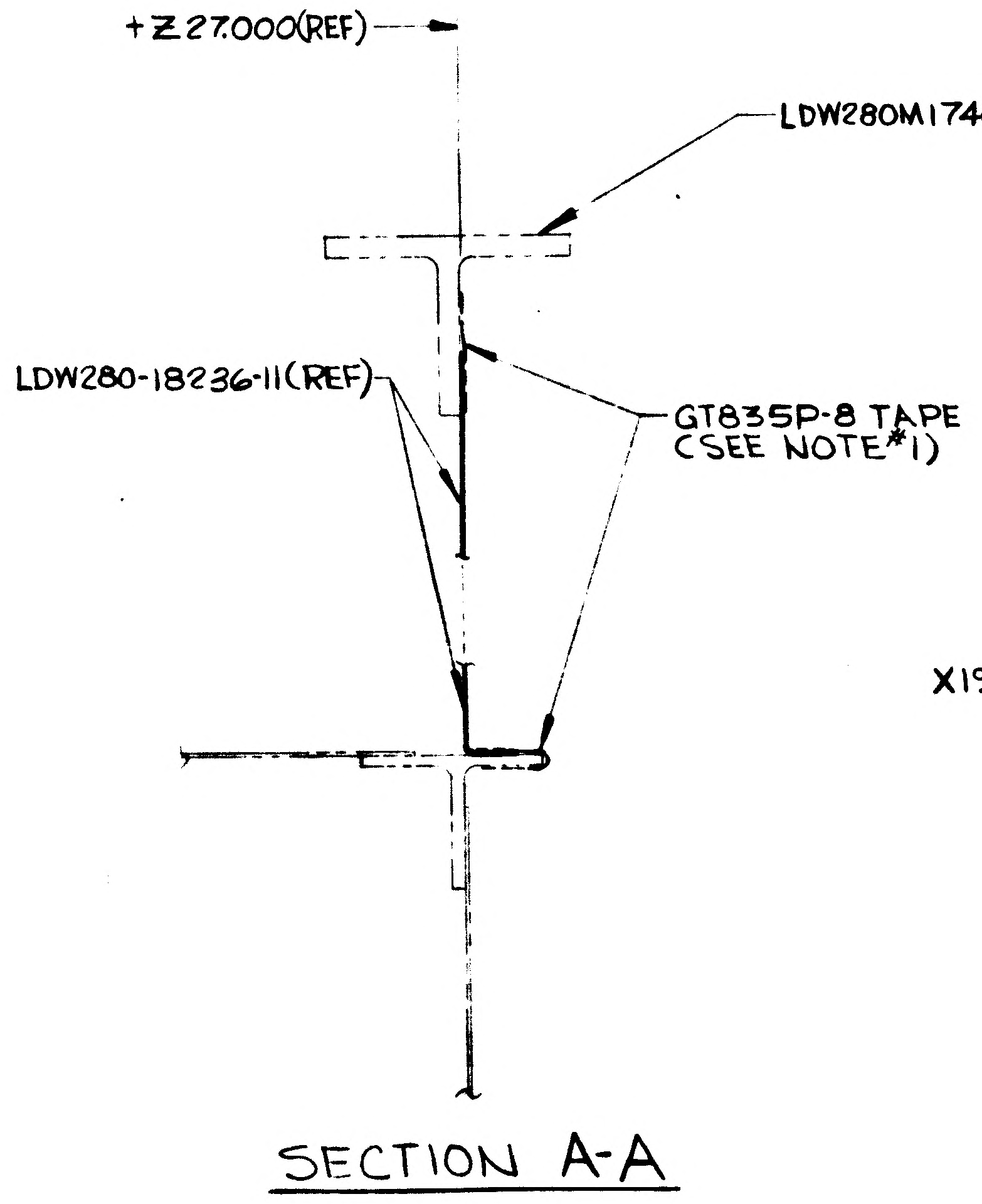

+Z27.000 (REF)
LDW280M17408 (REF)
LDW280-18236-11 (REF)
GT835P-8 TAPE (SEE NOTE #1)

SECTION A-A

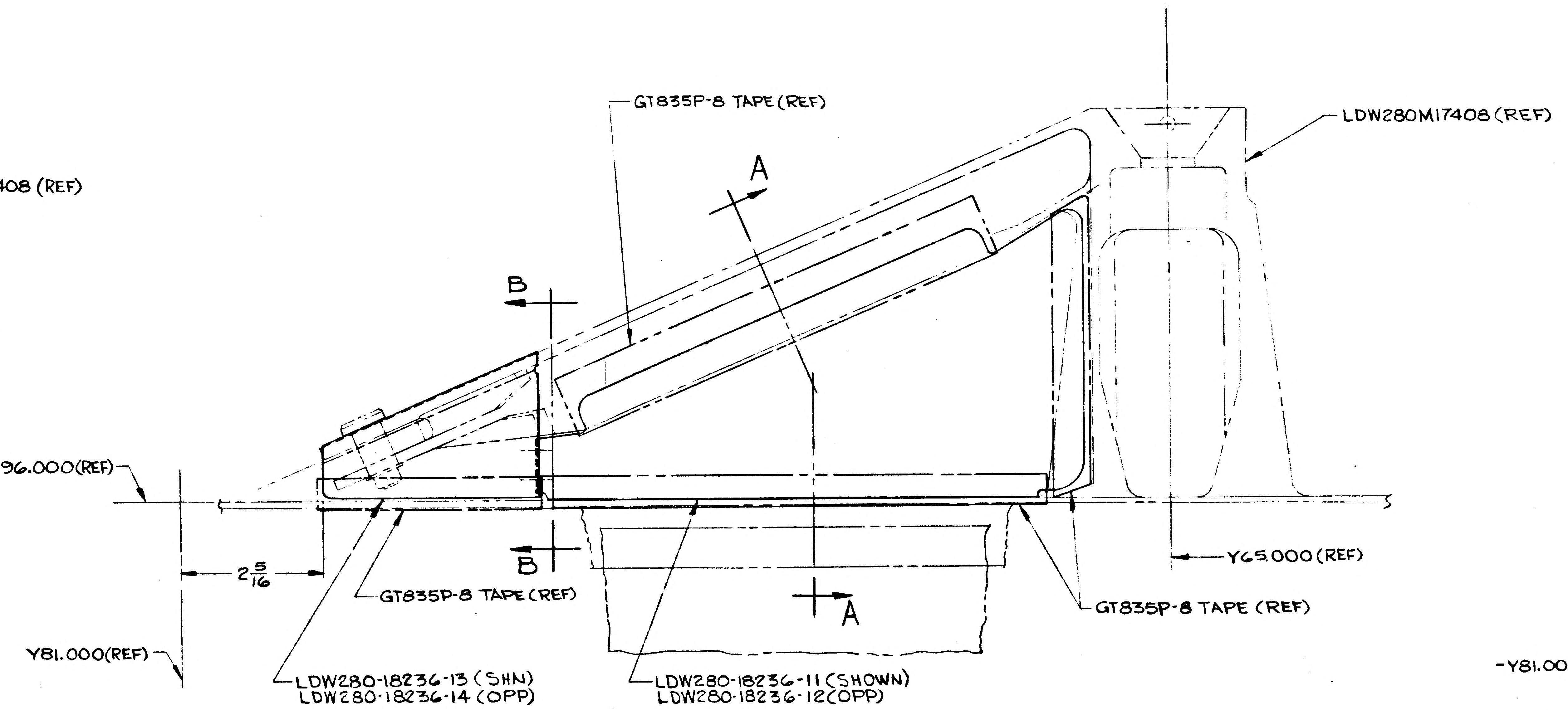

GT835P-8 TAPE (REF)
LDW280M17408 (REF)
A
B
B
A
X196.000 (REF)
2 5/16
GT835P-8 TAPE (REF)
Y65.000 (REF)
GT835P-8 TAPE (REF)
Y81.000 (REF)
LDW280-18236-13 (SHN)
LDW280-18236-14 (OPP)
LDW280-18236-11 (SHOWN)
LDW280-18236-12 (OPP)

LDW280-52627-1 INST'L (SHOWN)
-2 INST'L (OPP)

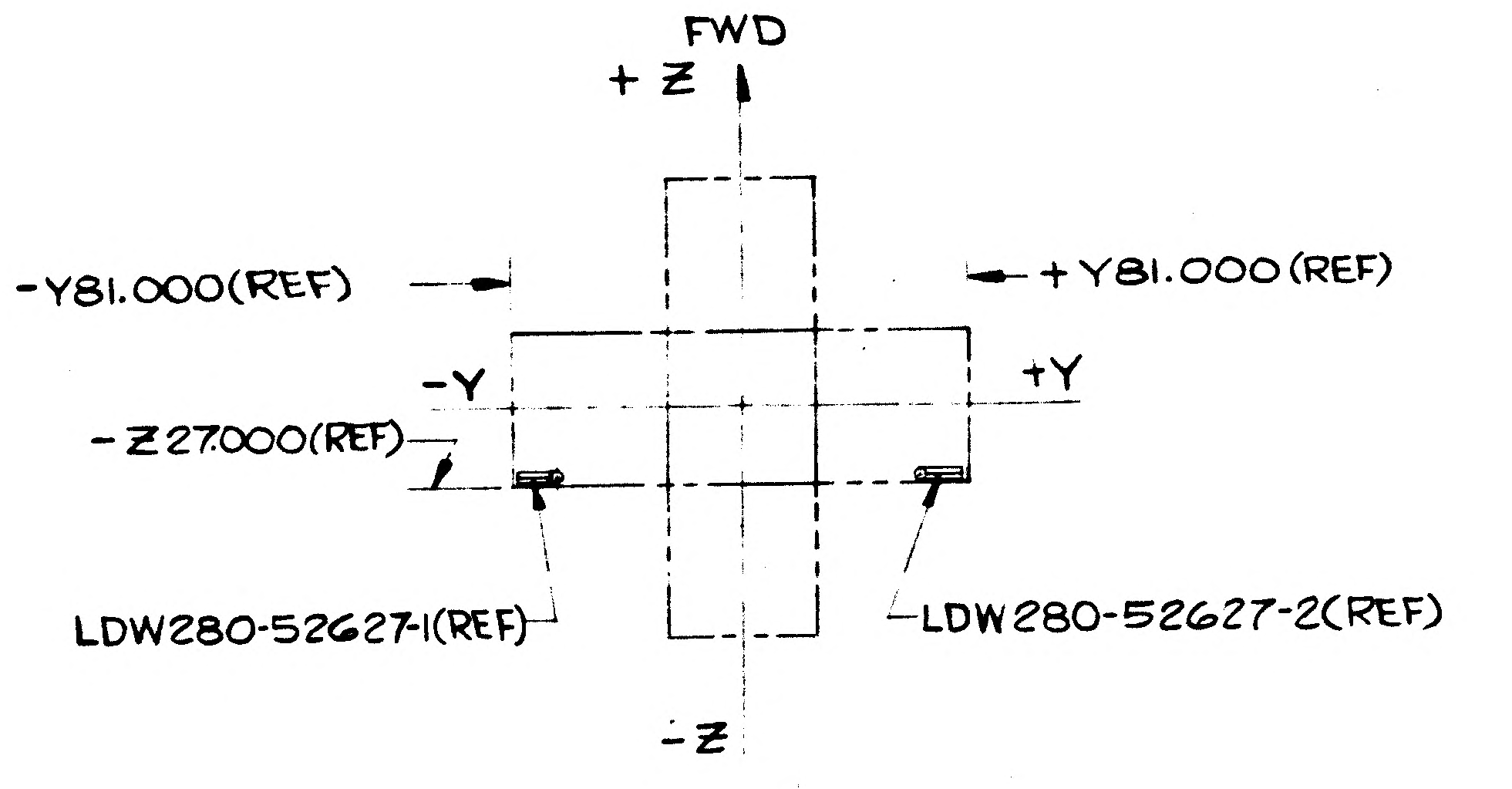

FWD
+Z
-Y81.000 (REF)
+Y81.000 (REF)
-Y
+Y
-Z27.000 (REF)
LDW280-52627-1 (REF)
LDW280-52627-2 (REF)
-Z

MANUFACTURING OPERATIONS
UNLESS OTHERWISE SPECIFIED
NOTES CHECKED ✓ APPLY TO THIS DWG.

PART NUMBER AND ALL OTHER MARKINGS IN REGION MARKED ⊠ USE BOTH SIDES IF NECESSARY.	
FILLET AND INSIDE CORNER RADII TOLERANCES .016R TO .062R ± .010 .063R TO .250R ± .015 OVER .250R ± .030	
DEPTH SHOWN FOR TAPPED HOLES IS FULL THDS 2-3 IMP. THDS. BEYOND PERMISSIBLE	
EXTERNAL THREAD LENGTH SHOWN INCLUDES 2 IMPERFECT THREADS MAX.	
DO NOT CADMIUM PLATE & PAINT HOLES OR SURFACES MARKED WITH DOUBLE ASTERISK	
MISMATCH STEP OF ± .005 PERMISSIBLE DUE TO CHANGE OF CUTTERS AT INSIDE INTERSECTING SURFACES.	
DIAMETERS MARKED MUST BE CONCENTRIC WITHIN FULL INDICATOR READING	
HOLES MUST BE KEPT FREE OF CHROME PLATING SOLUTION.	
ALL DIMENSIONS SHOWN TO BE MET AFTER CADMIUM PLATING. THICKNESS OF PLATE .0003 MIN TO .0005 MAX. MIN THICKNESS TO BE .0002 ON THREADED AREAS. NO ALLOWANCES FOR PLATING IN HOLES	
125 √ SURFACE ROUGHNESS INCLUDING REAMED HOLES PER MIL STD-10	
200 √ FOR ALL DRILLED HOLES	
REMOVE ALL BURRS BREAK ALL EDGES .015-.031	
INSPECTION INFORMATION MINIMUM PERMISSIBLE AVERAGE EDGE DISTANCE MARKED IS	
SYMBOL √ DENOTES SURFACE TO BE MACHINED	
UNLESS OTHERWISE SPECIFIED TOLERANCE ON FLANGES IS ± 1/32	
LENGTHS OF AN, NAS & MS AL ALY RIVETS SHORTER THAN 1 INCH ARE NOT SPECIFIED	
TOLERANCE ON LOFTED DELINEATIONS IS	

011 NAS 9-1100

GRUMMAN AIRCRAFT ENGRG CORP. BETHPAGE, L. I., NEW YORK

MODEL OR END ITEM	SIZE	CODE IDENT NO.		
LM	E	26512	LDW280-52627	A
SCALE - FULL			SHEET [illegible]	

LDW280-52627 A

NO 32.2 REV 3-65 **RELEASED BY LIAISON**

GRUMMAN AIRCRAFT ENGINEERING CORP.
CODE IDENT NO. 26512
ENGINEERING ORDER

DWG. NO. LDW280-52627 EO NO. B1
CONTROL INFO NO. LM-5-12285

IN FLD & B/M -
CREATE -3 & -4 INSTALLATION SAME AS -1 & -2 EXCEPT AS SHOWN:
(NOTE -1 & -2 INSTL TO REMAIN AS IS FOR LM-4 THRU -15)

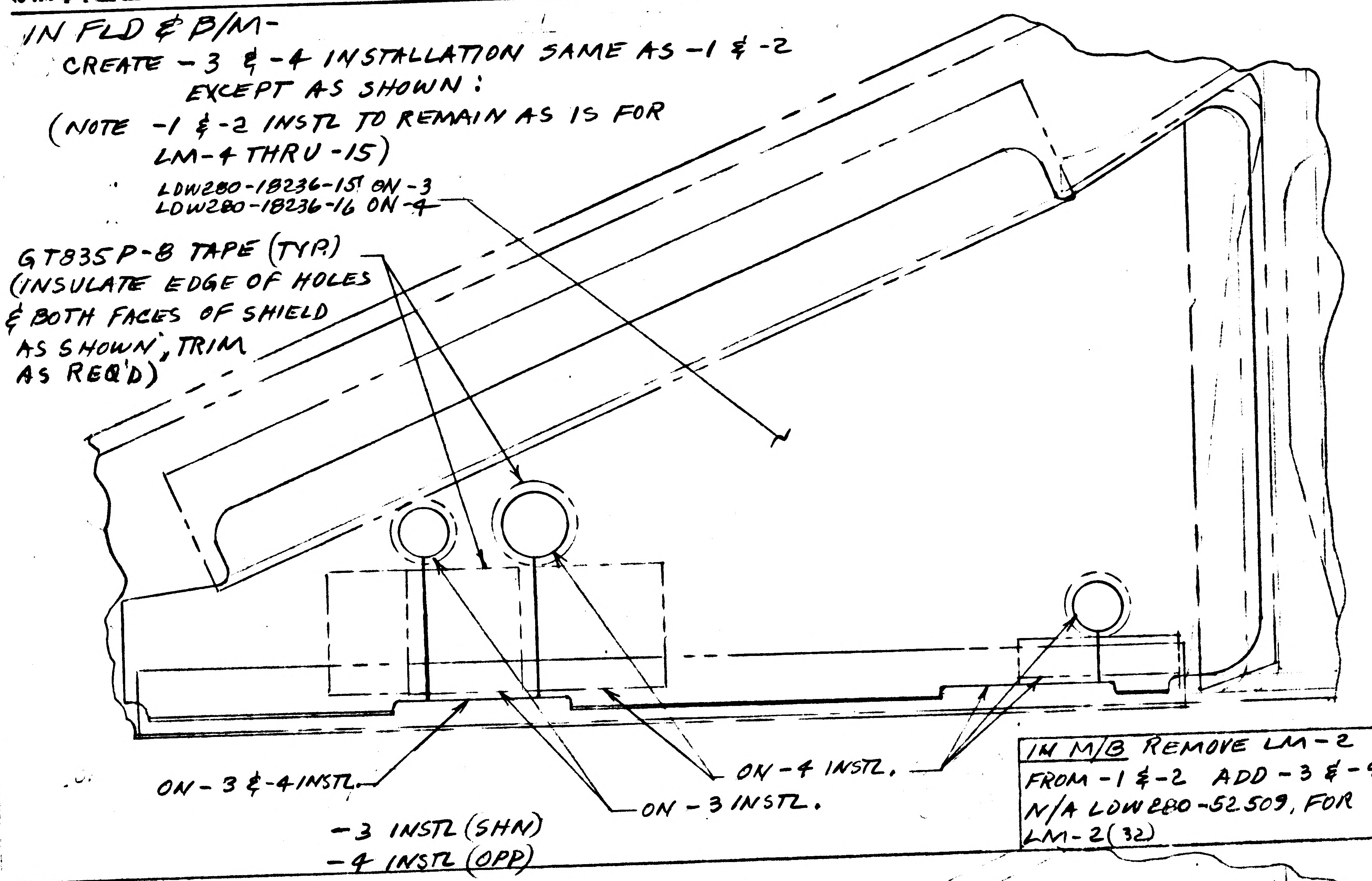

LDW280-18236-15 ON -3
LDW280-18236-16 ON -4
GT835P-8 TAPE (TYP.) (INSULATE EDGE OF HOLES & BOTH FACES OF SHIELD AS SHOWN, TRIM AS REQ'D)
ON-3 & -4 INSTL.
ON-4 INSTL.
ON-3 INSTL.
-3 INSTL (SHN)
-4 INSTL (OPP)

IN M/B REMOVE LM-2 FROM -1 & -2 ADD -3 & -4 N/A LDW280-52509, FOR LM-2 (32)

IN FLD & B/M -
CREATE -5 & -6 SAME AS -1 & -2 EXCEPT AS SHOWN:

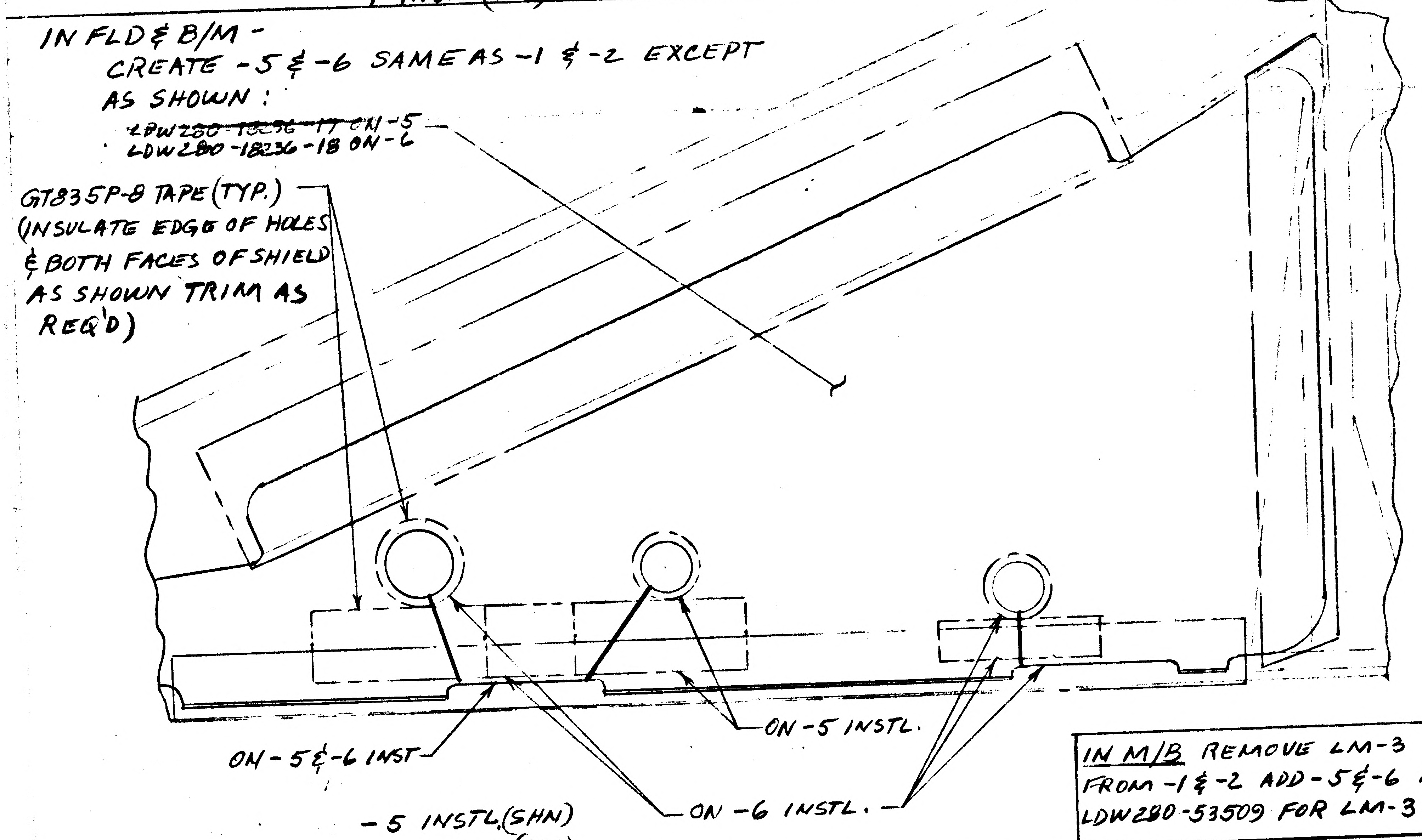

~~LDW280-18236-17 ON-5~~
LDW280-18236-18 ON-6
GT835P-8 TAPE (TYP.) (INSULATE EDGE OF HOLES & BOTH FACES OF SHIELD AS SHOWN TRIM AS REQ'D)
ON-5 & -6 INST
ON-5 INSTL.
ON-6 INSTL.
-5 INSTL (SHN)
-6 INSTL. (OPP)

IN M/B REMOVE LM-3 FROM -1 & -2 ADD -5 & -6 N/A LDW280-53509 FOR LM-3 (33)

DETAIL SPEC REQ ☐ CL II ENGRG CHG ☐ CL I ENGRG CHG ☐

GAEC EO RELEASE: Ⓡ

REASON FOR EO: SHIELD MUST CLEAR WIRE CABLES IN AREA. THIS IS PECULIAR TO LM-2 & LM-3 ONLY

DESCRIPTION OF EO: TO FLD & B/M ADDED -3, -4, -5, & -6 INSTL. IN M/B REMOVED LM-2 & LM-3 FROM -1 & -2 INSTL. ADDED -3 & -4 INSTL. FOR LM-2 N/A LDW280-52509 & -5 & -6 INSTL. FOR LM-3 N/A LDW280-53509

MODEL	PROCURING ACTIVITY NO.	GAEC UNIT NO.	SUB CONTR UNIT NO.
LM		LM-2 (32)	
		LM-3 (33)	

DRAWING CHANGE REQD		DISPOSITION OF PARTS		APPROVED BY							
✓		✓		DATE	2/20			2-4-67	2-4-67	2-4-67	2/4/67
REVISE DWG	RECORD EO	REWORK	SCRAP	1	VDI	SUPPORT	RELIAB. GROUP	GROUP LEADER	STRESS GROUP	LIAISON ENGRG	PROJ ENGRG

PRIORITY: C

DRAWING TITLE: SHIELD INSTL. D/S AFT INTERSTAGE-METEOROID PROTECT.

DRAWING NO.: LDW280-52627

EO NO.: B1

ISSUED BY LIAISON, P. HUSTED, 6216 SECTION YDI GROUP NO. 335 PL 35

01

NAS 9-1100

B

ENG 32.2 REV 3-66

GRUMMAN AIRCRAFT ENGINEERING CORP.
CODE IDENT NO. 26512 *
ENGINEERING ORDER

DWG. NO. LDW280-52627 | EO NO. B2
CONTROL INFO NO. LDW280A7541

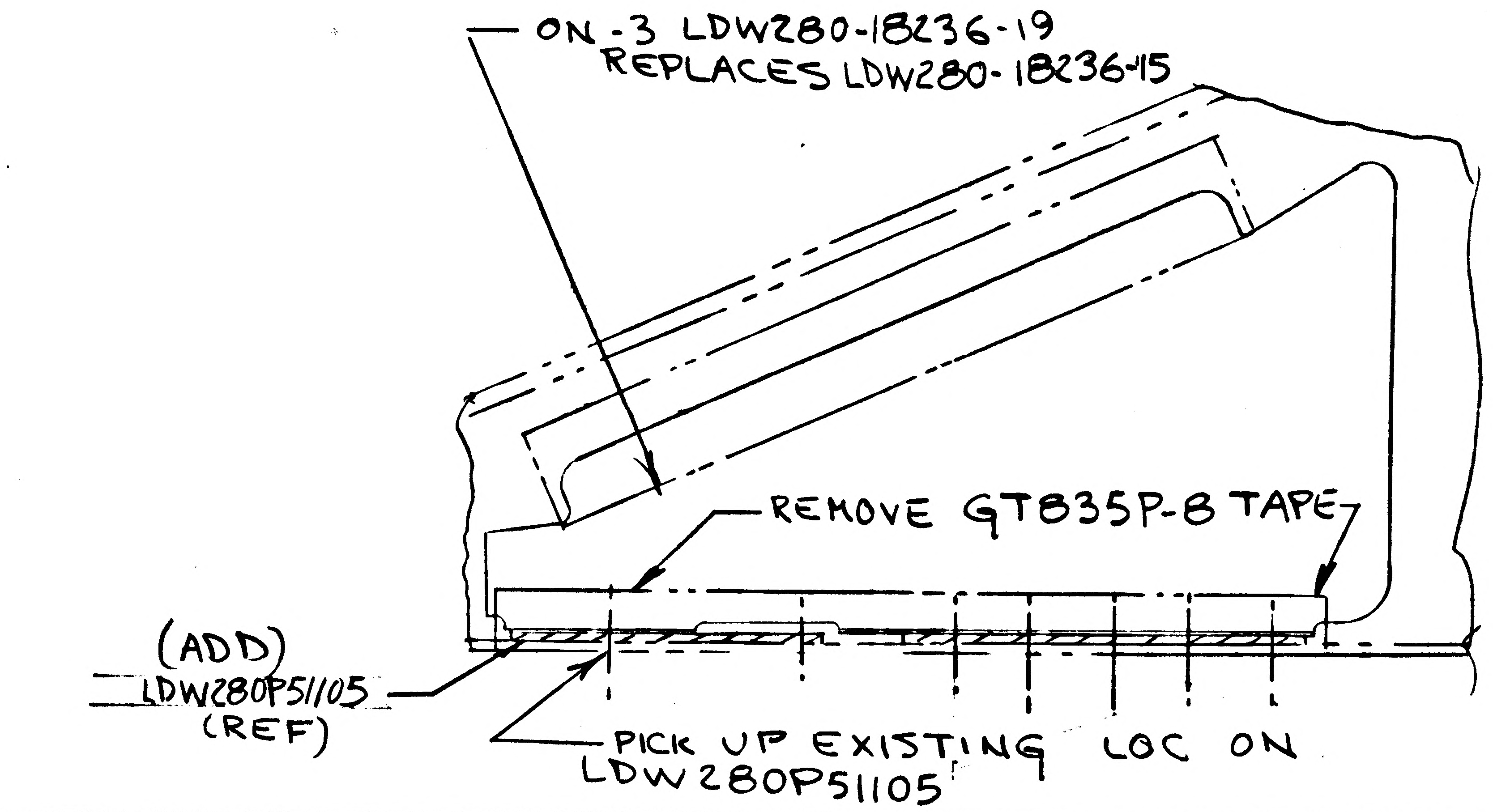
ON-3 LDW280-18236-19
REPLACES LDW280-18236-15
REMOVE GT835P-8 TAPE
(ADD)
LDW280P51105
(REF)
PICK UP EXISTING LOC ON
LDW280P51105

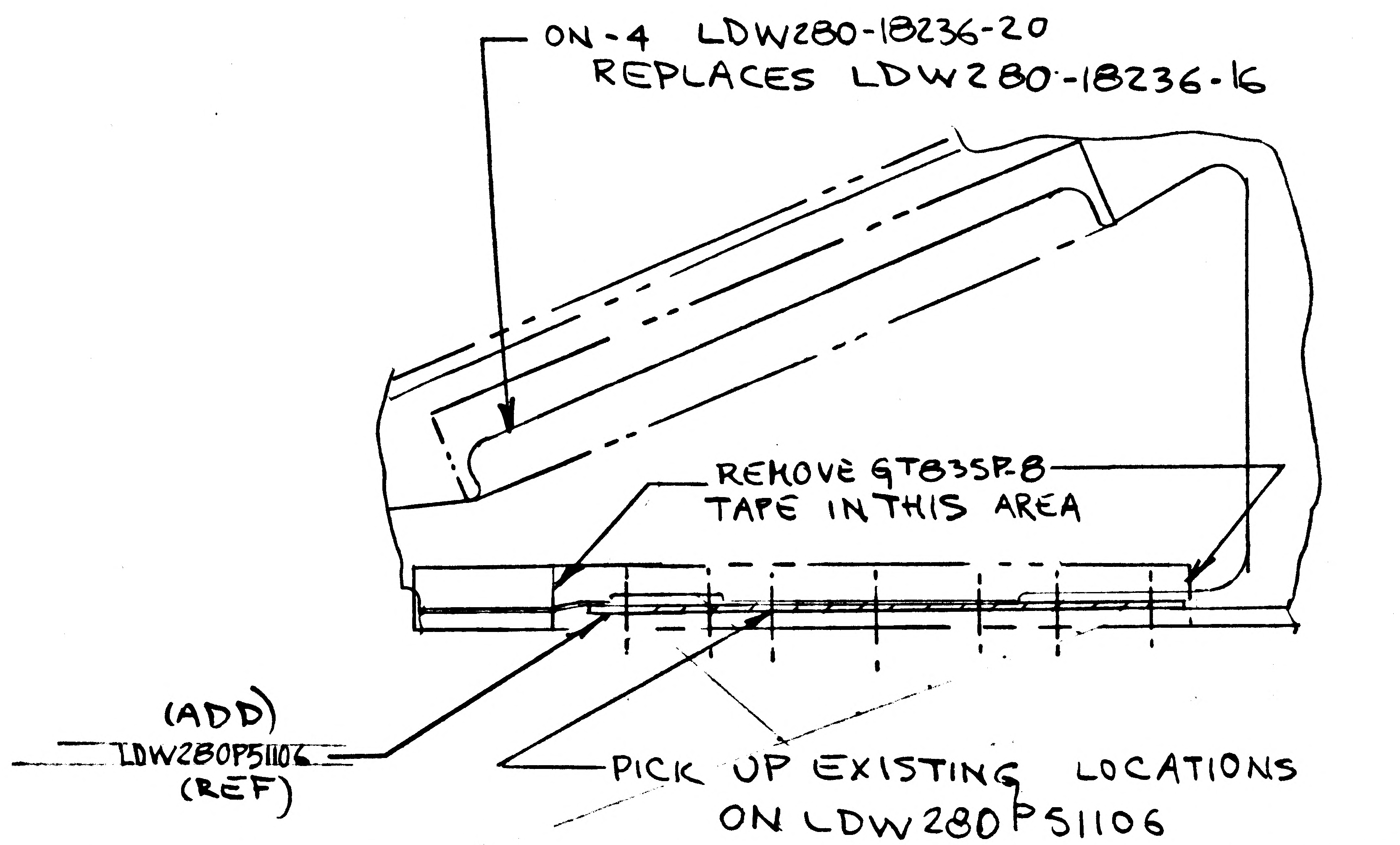
ON-4 LDW280-18236-20
REPLACES LDW280-18236-16
REMOVE GT835P-8
TAPE IN THIS AREA
(ADD)
LDW280P51106
(REF)
PICK UP EXISTING LOCATIONS
ON LDW280P51106

DETAIL SPEC REQ	☐	CL II ENGRG CHG	☑	CL I ENGRG CHG	☐

LCD-1244

5

REASON FOR EO: TO PROVIDE FOR FITH SHIELD

DESCRIPTION OF EO:
ON-3 LDW280-18236-19 REPLACED LDW280-18236-15
ON-4 LDW 280-18236-20 REPLACED LDW280-18236-16
REMOVED GT835P-8 IN THIS AREA

Ⓡ GAEC EO RELEASE: C JK 6/20/

MODEL	PROCURING ACTIVITY NO.	GAEC UNIT NO.	SUB CONTR UNIT NO.
LM		LM-2(32)	

DRAWING CHANGE REQD: REVISE DWG	RECORD EO	DISPOSITION OF PARTS: REWORK	SCRAP	APPROVED BY	SUPPORT	RELIAB. GROUP	GROUP LEADER	STRESS GROUP	LIAISON ENGRG	PROJ ENGRG	CCB
✓		✓-3 -4		5 VDI							Both
				DATE 6/15/67			6/1/67	6/1/67		6/16/67	6-19-67

PRIORITY: C

DRAWING TITLE: SHIELD INSTL D/S-AFT INTER-METEROID PROT

DRAWING NO.: LDW280-52627

EO NO.: B2

ISSUED BY STEA/STRAKOSCH X1156 SECTION VD I GROUP NO. 335 PL 25

B

ENG 32.1 REV 3-65

GRUMMAN AIRCRAFT ENGINEERING CORP.
CODE IDENT NO. 26512
ENGINEERING ORDER

DWG. NO. LDW 280-52627
EO NO. B3
CONTROL INFO NO. LM 5-13592

ON-3
REMOVE LDW280-18236-19

ON-4
REMOVE LDW280-18236-20

RELEASED BY LIAISON

DETAIL SPEC REQ	☐	CL II ENGRG CHG	☑	CL I ENGRG CHG	☐

5

REASON FOR EO: TO PROVIDE FOR FIFTH SHIELD CLEARANCE

DESCRIPTION OF EO: ON-3 INSTL REMOVED LDW280-18236-19
ON-4 INSTL REMOVED LDW280-18236-20

GAEC C EO RELEASE: JK

MODEL	EFFECTIVITY: PROCURING ACTIVITY NO.	GAEC UNIT NO.	SUB CONTR UNIT NO.
LM		LM 2(32)	

DRAWING CHANGE REQD: REVISE DWG ✓ RECORD EO
DISPOSITION OF PARTS: REWORK ✓ SCRAP

APPROVED BY								
DATE	8/2?/67				8/22/67	8-22-67	8/2?/67	8/23/67
	VDI	SUPPORT	RELIAB. GROUP	GROUP LEADER	STRESS GROUP	LIAISON ENG.	PROJ ENGRG	

PRIORITY: C
DRAWING TITLE: SHIELD INSTL D/S-AFT INTER-MET. PROT.
DRAWING NO.: LDW280-52627
EO NO.: B3

ISSUED BY Don Ragas X1153 SECTION VDI GROUP NO. 335 PL 5

01 NAS 9-1100

RELEASED BY LIAISON

ENG 323 REV 3-65

GRUMMAN AIRCRAFT ENGINEERING CORP.
CODE IDENT NO. 26512
ENGINEERING ORDER

DWG. NO. LDW280-52627	EO NO. B4
CONTROL INFO NO. LM-5-19890	

ON-5

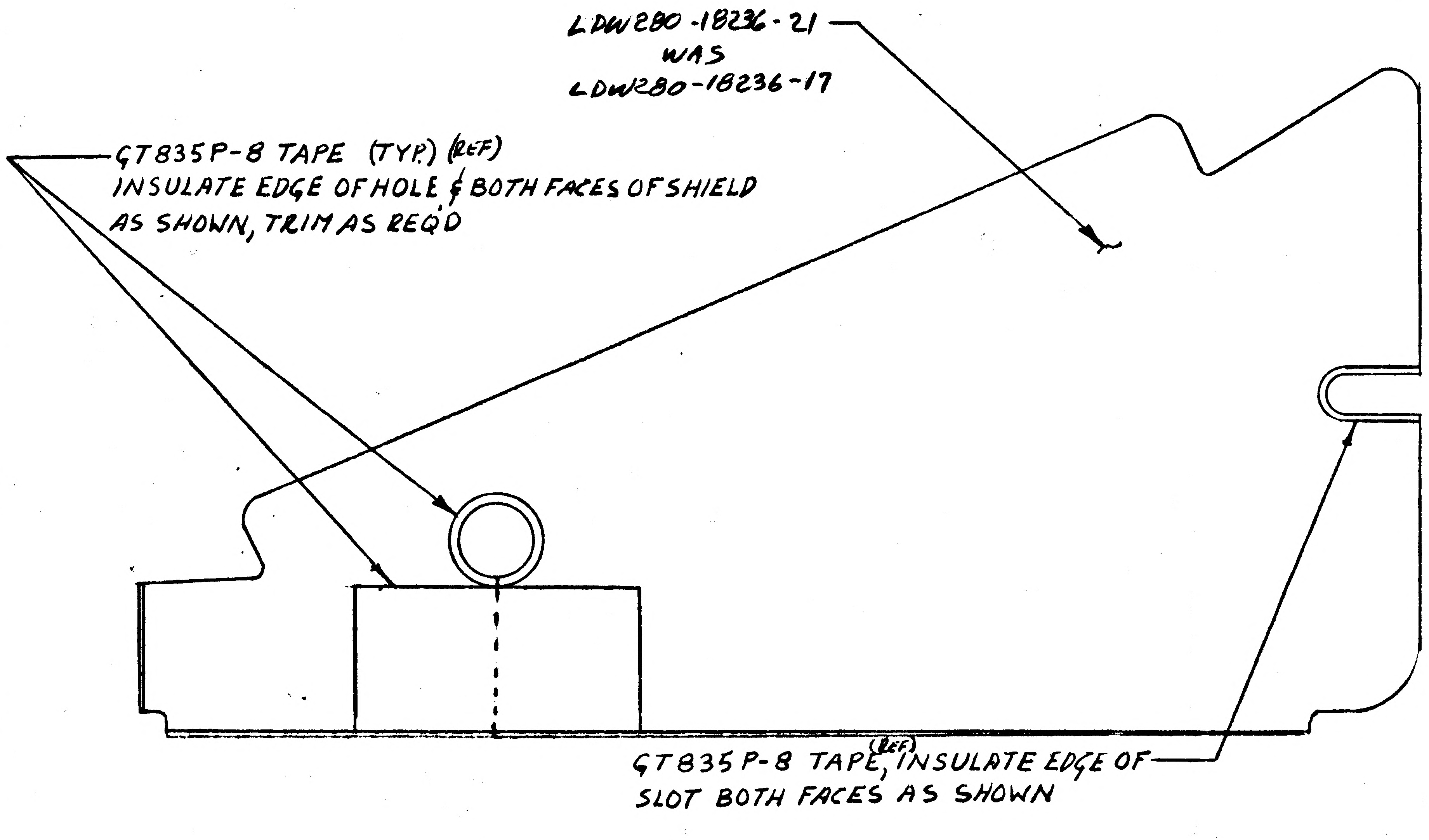

LDW280-18236-21
WAS
LDW280-18236-17
GT835P-8 TAPE (TYP) (REF)
INSULATE EDGE OF HOLE & BOTH FACES OF SHIELD
AS SHOWN, TRIM AS REQD
GT835P-8 TAPE, (REF) INSULATE EDGE OF
SLOT BOTH FACES AS SHOWN

ON-6

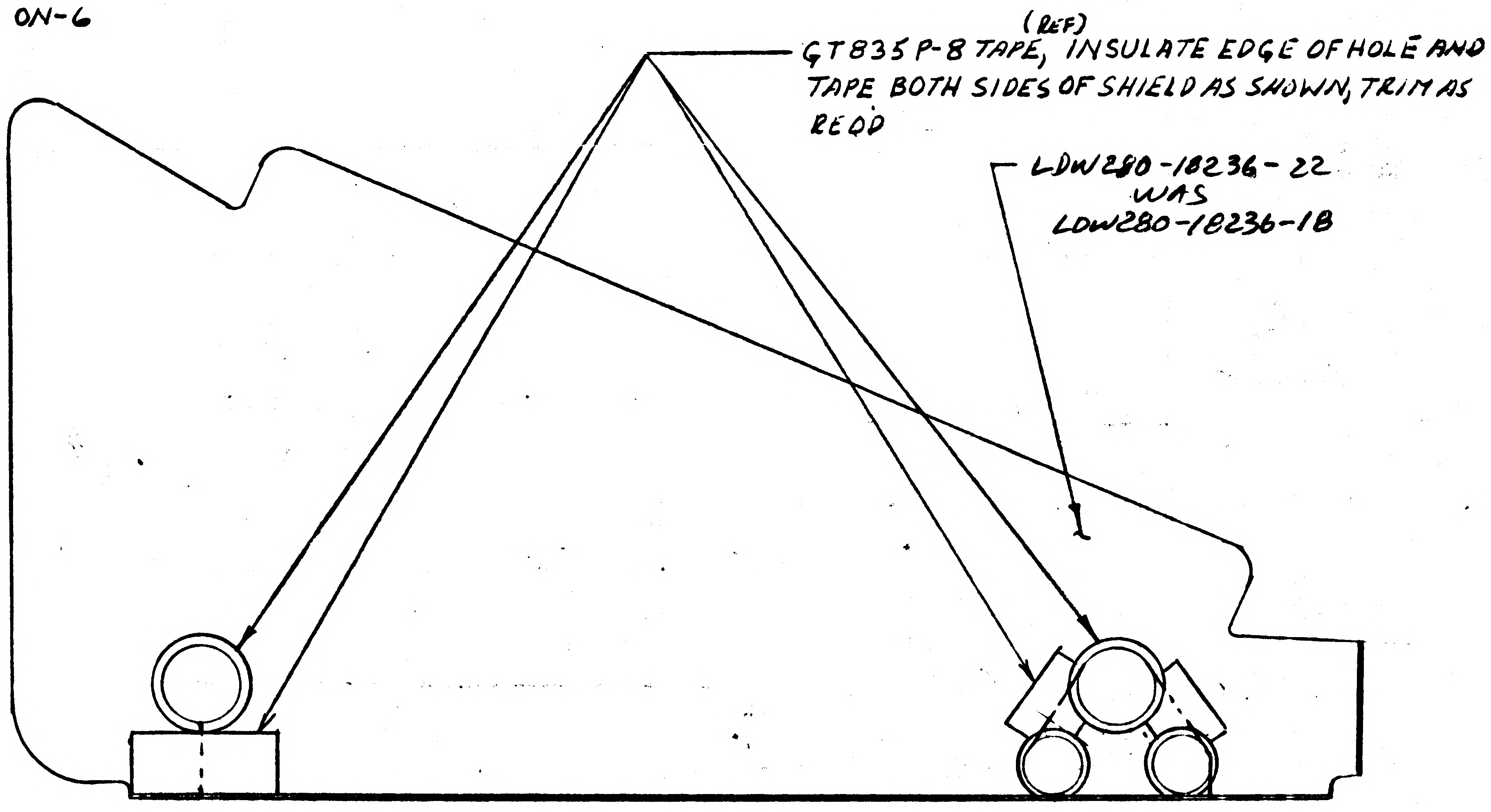

GT835P-8 TAPE, (REF) INSULATE EDGE OF HOLE AND
TAPE BOTH SIDES OF SHIELD AS SHOWN, TRIM AS
REQD
LDW280-18236-22
WAS
LDW280-18236-18

DETAIL SPEC REQ		CL II ENGRG CHG	✓	CL I ENGRG CHG	

REASON FOR EO: SHIELD MUST CLEAR WIRE CABLES IN AREA.

DESCRIPTION OF EO:
ON-5
REMOVED LDW280-18236-17 ADDED LDW280-18236-21
ON-6
REMOVED LDW280-18236-18 ADDED LDW280-18236-22

GAEC EO RELEASE: SK 025

MODEL	PROCURING ACTIVITY NO.	GAEC UNIT NO.	SUB CONTR UNIT NO.
LM		LM-3(33)	

DRAWING CHANGE REQD: REVISE DWG	RECORD EO	DISPOSITION OF PARTS: REWORK	SCRAP
✓		✓	

		SUPPORT	RELIAB. GROUP	GROUP LEADER	STRESS GROUP	LIAISON ENGRG	PROJ ENGRG
APPROVED BY	Gnl			—	HJ	CH	Jat
DATE	5/11/68			—	5-2-68	5-1-68	5/11/68
4-30-68	VIII						

PRIORITY	DRAWING TITLE	DRAWING NO.	EO NO.
C	SHIELD INSTAL. D/S AFT INTERSTAGE-METEOROID PROTECT.	LDW280-52627	B4

ISSUED BY LIAISON L TIENKEN X 86755 SECTION VD1 GROUP NO. 335 PL 5

01
NAS 9-1100

GRUMMAN AIRCRAFT ENGINEERING CORP.
CODE IDENT NO. 26512
ENGINEERING ORDER

ENG 32.1 REV 3-65

DWG. NO. LDW280-52627	EO NO. B5
CONTROL INFO NO. LM-5-20037	

ON-5
IN FLD/DWG & B/M:

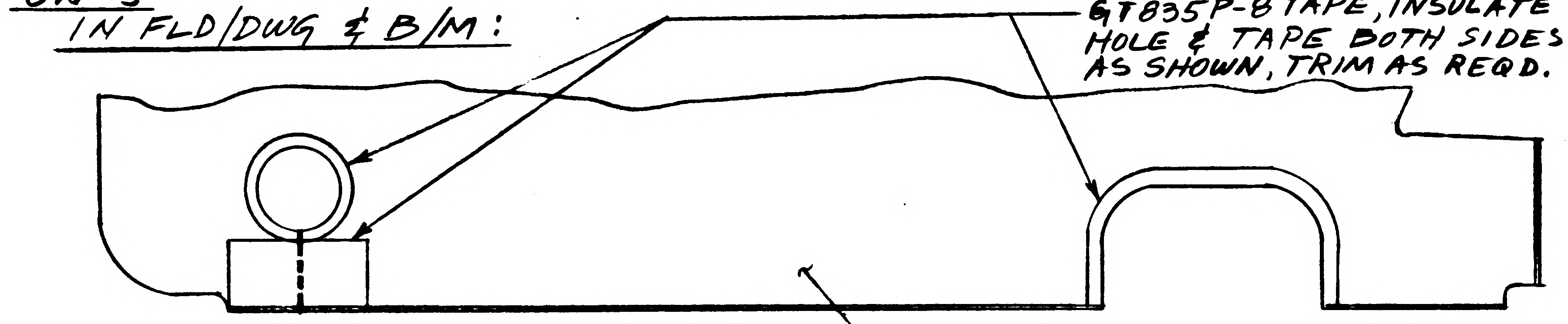

(REF)
GT835P-8 TAPE, INSULATE EDGE OF HOLE & TAPE BOTH SIDES OF SHIELD AS SHOWN, TRIM AS REQD.

LDW280-18236-24
WAS:
LDW280-18236-22

RELEASED BY LIAISON

ON-1, & -5
IN FLD/DWG & B/M
DELETE: LDW280-18236-13 ADD: LDW280-18236-13-1

ON-2 & -6
IN FLD/DWG & B/M
DELETE: LDW280-18236-14 ADD: LDW280-18236-14-1

DETAIL SPEC REQ	☐	CL II ENGRG CHG	☑	CL I ENGRG CHG	☐

REASON FOR EO: FOLLOW-UP OF CHANGES MADE ON DETAIL DWG.

DESCRIPTION OF EO: IN FLD & B/M ON-5 ADDED LDW280-18236-24 DELETED LDW280-18236-22; ON-1 & -5 ADDED LDW280-18236-13-1 DELETED LDW280-18236-13; ON-2 & -6 ADDED LDW280-18236-14-1 DELETED LDW280-18236-14

GAEC EO RELEASE: (5) C 025

MODEL	EFFECTIVITY PROCURING ACTIVITY NO.	GAEC UNIT NO.	SUB CONTR UNIT NO.
LM		LM-3 (33)	
		THRU	
		LM-15 (45)	

DRAWING CHANGE REQD: REVISE DWG	RECORD EO	DISPOSITION OF PARTS: REWORK	SCRAP
✓		✓	

APPROVED BY								
DATE	5/25			Z	5-17-68	5-17-68	5/25	5/18/68
5-17-68	VDI	SUPPORT	RELIAB. GROUP	GROUP LEADER	STRESS GROUP	LIAISON ENGRG	PROJ ENGRG	~~GOVT~~

PRIORITY: C
DRAWING TITLE: SHIELD INSTL D/S AFT INTERSTAGE METEOROID PROTECT.
DRAWING NO.: LDW280-52627
EO NO.: B5

ISSUED BY LIAISON, P. HUSTED, 86755 SECTION V DI GROUP NO. 335 PL 25

ENG 32.1 REV 3-65

GRUMMAN AIRCRAFT ENGINEERING CORP.
CODE IDENT NO. 26512
ENGINEERING ORDER

DWG. NO. LEO 280 | EO NO. 1444
CONTROL INFO NO LDW280B7453

FOR THE DWGS LISTED BELOW DELETE LM-15(45) EFF FROM ALL DASH NOS. *

DWG NO.	CHANGE NO.	DWG NOMENCLATURE
LDW280-51642	B4	SEE DWG
-51818	B1	
-51823	A3	
-52571	A3	
-52574	B3	
LDW280 -52627	B4	SEE DWG

* APPLICABLE DASH NOS

DETAIL SPEC REQ	☐	CL II ENGRG CHG	☐	CL I ENGRG CHG	☑	LCD3587 PKG 56 PG 1 CCA 1821 (5)

REASON FOR EO: LM-15(45) NO LONGER REQD

DESCRIPTION OF EO: DELETED LM-15(45) EFF FROM -*

GAEC EO RELEASE: (E) VC 5/7/69

MODEL	EFFECTIVITY: PROCURING ACTIVITY NO.	EFFECTIVITY: GAEC UNIT NO.	EFFECTIVITY: SUB CONTR UNIT NO.
LM		LM-15 (45)	

DRAWING CHANGE REQD: REVISE DWG	DRAWING CHANGE REQD: RECORD EO	DISPOSITION OF PARTS: REWORK	DISPOSITION OF PARTS: SCRAP
✓			✓

	VDI	SUPPORT	RELIAB. GROUP	GROUP LEADER	STRESS GROUP	LIAISON ENGRG	PROJ ENGRG	GOVT
APPROVED BY								
DATE	4/18/69			4-2-69	4/8/69		4/9/69	5/7/69

PRIORITY: C | DRAWING TITLE: SEE DWG | DRAWING NO. LEO 280 | EO NO. 1444

052869 ISSUED BY MEVORAH / THORJUSEN X86046 SECTION VEH DES INT GROUP NO. 335 PL 25

01

NAS 9-1100

ENG 32.1 REV 3-65

GRUMMAN AIRCRAFT ENGINEERING CORP.
CODE IDENT NO. 26512

ENGINEERING ORDER

DWG. NO. LDW280-52627		EO NO. B7
CONTROL INFO NO. LDW280B9195		

IN MOD. BLK. ON-1 & 2 N/A LDW280-60509 (WAS) N/A LDW280-54509
EFF: LM-10(40) THRU LM-14 (44)

DETAIL SPEC REQ	☐	CL II ENGRG CHG	☐	CL I ENGRG CHG	✓	LCD 3890 PKG 79 (5)

REASON FOR EO
REIDENTIFICATION OF STRUCTURAL ASSEMBLY FOR LMMP

DESCRIPTION OF EO
IN MOD. BLK ON-1 & 2 N/A LDW280-60509 (WAS) LDW280-54509

GAEC EO RELEASE
(R) JK 11/5/69

MODEL	EFFECTIVITY		
	PROCURING ACTIVITY NO.	GAEC UNIT NO.	SUB CONTR UNIT NO.
LM		LM-10 (40)	
		THRU	
		LM-14 (44)	

DRAWING CHANGE REQD		DISPOSITION OF PARTS	
✓		✓	
REVISE DWG	RECORD EO	REWORK	SCRAP

APPROVED BY								
DATE	11/4/69			11-4-69	11/4/69		11/5/69	11/5/69
	YDI	SUPPORT	RELIAB. GROUP	GROUP LEADER	STRESS GROUP	LIAISON ENGRG	PROJ ENGRG	

PRIORITY	DRAWING TITLE	DRAWING NO.	EO NO.
C	SHIELD INSTL - D/S - MET. PROT.	LDW280-52627	B7

CDR 110669

ISSUED BY D. SHAPIRO/P. THORJUSEN X86046 SECTION VDI GROUP NO. 335 PL 25

01

NAS 9-1100

01
NAS 9-1100

ENG 32.2 REV 3-68

GRUMMAN AIRCRAFT ENGINEERING CORP.
CODE IDENT NO. 26512
ENGINEERING ORDER

DWG NO.	NOTED	EO NO.	
CONTROL INFO NO.	LM-5-23421		

IN MODEL BLOCK REPLACE -11(1) & -12(1) WITH -25(1) & -27(1) ON N/A LDW280-52627 EFF. LM 10(40) THRU LM-13(43)

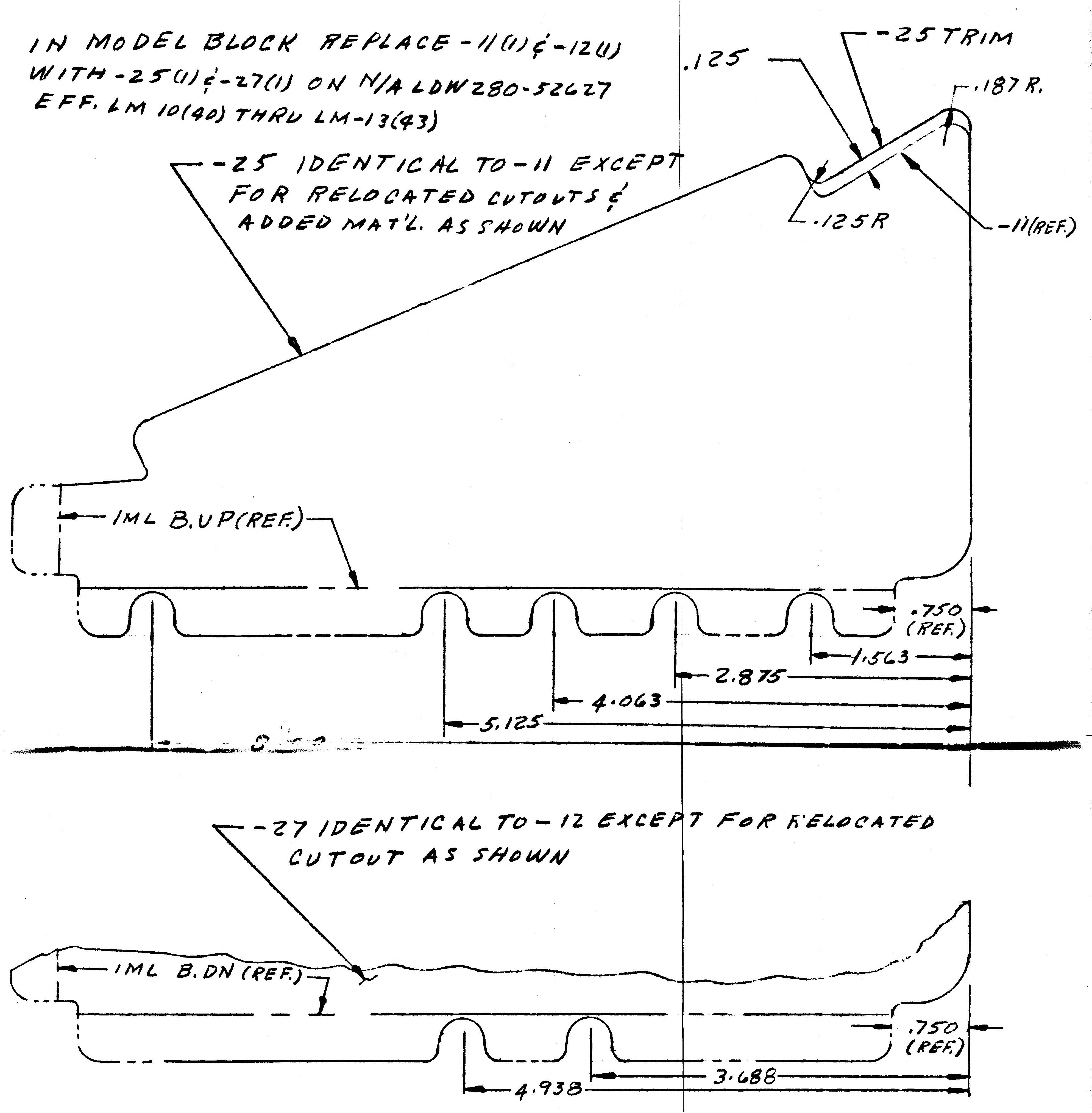
-25 TRIM
.125
.187 R.
.125R
-11(REF.)
-25 IDENTICAL TO -11 EXCEPT FOR RELOCATED CUTOUTS & ADDED MAT'L. AS SHOWN
IML B.UP(REF.)
.750 (REF.)
1.563
2.875
4.063
5.125
-27 IDENTICAL TO -12 EXCEPT FOR RELOCATED CUTOUT AS SHOWN
IML B.DN (REF.)
.750 (REF.)
3.688
4.938

DWG NO	EO NO
LDW280-18236	C3
N.H.A.	EO NO
LDW 280-52627	B8

N.H.A. DESCRIPTION OF EO

ON -1 & -2 REPLACED LDW280-18236-11 & -12 WITH LDW280-18236-25 & -27 RESPECTIVELY

DETAIL SPEC REQ ☐ CL II ENGRG CHG ☐ CL I ENGRG CHG ☑ LCD 3994 PKG 5

REASON FOR EO: TO AGREE WITH REVISED FITH SHIELD

DESCRIPTION OF EO: REPLACED -11(1) & -12(1) WITH -25(1) & -27(1) RESPECTIVELY

GAEC / EO RELEASE: AEG

MODEL	EFFECTIVITY: PROCURING ACTIVITY NO.	GAEC UNIT NO.	SUB CONTR UNIT NO.
LM	LM-10(40) THRU LM-13(43)		

DRAWING CHANGE REQD: REVISE DWG ✓ RECORD EO
DISPOSITION OF PARTS: REWORK SCRAP ✓

		SUPPORT	RELIAB. GROUP	GROUP LEADER	STRESS GROUP	LIAISON ENGRG	PROJ ENGRG	GOVT
APPROVED BY	PH				KC	CH		
DATE	10-9-70			10/9/70	10/7/70	10-7-70	10/7/70	10/7/70
	VDI							

PRIORITY: C
DRAWING TITLE: PLATE ~ D/S ~ INTERSTAGE METEROID PROTECTION
DRAWING NO.: NOTED
EO NO.:

ISSUED BY LIAISON C. COSMA X9491 SECTION V.D.I. GROUP NO. 290 PL 25

LDW280-52635 B

MODEL OR END ITEM	NEXT ASSY	MODULE OR SER NO.	REQD PER MODULE OR END ITEM
LM	LDW280-52553	LM2(32)	1

PART NO.	GAEC SCH NO.
LDW280-52635-7	

MODEL OR END ITEM	NEXT ASSY	MODULE OR SER NO.	REQD PER MODULE OR END ITEM
LDW 420-2370	LDW280-53553	SERIAL*1	1
LM	LDW280-54553	LM-15(45)	1
		LM-14(44)	1
		LM-13(43)	1
		LM-12(42)	1
		LM-11(41)	1
		LM-10(40)	1
		LM-9(39)	1
		LM-8(38)	1
		LM-7(37)	1
		LM-6(36)	1
		LM-5(35)	1
	LDW 280-54553	LM-4(34)	1
LM	LDW280-53553	LM-3(33)	1

PART NO.	GAEC SCH NO.
LDW280-52635-5	50

(5)

SH REV STATUS: FOR DESCRIPTION OF REV SEE SUBQ SH

SHEET	1.00	1.10	1.11		2.00	3.00			
REV	B	B	B		B	B			
SHEET									
REV									
SHEET									
REV									

LAST SECT LTR USED B

LAST DASH NO. USED -7

GRUMMAN REL INFO B

PRIM NO. 207

K(001) MP-13 11/17/7

UNLESS OTHERWISE SPECIFIED DIMENSIONS ARE IN INCHES.
TOLERANCE UNLESS SPECIFIED
FRACTIONS - DECIMALS - ANGLES
±1/32 ±.020 ±1/2°

ORIG DWG AUTH
DETAIL SPEC REQUIREMENT
CLASS II ENGRG CHANGE
CLASS I ENGRG CHANGE

CONTRACT NO. NAS 9-1100
LINE ITEM #1
DOCUMENTATION TYPE II

DRAWN BY	F. HACKERT 4-24-66	RELIABILITY	
LAYOUT BY	R. FISCHLER 5/2/66		
CHECKED BY	EG 4-29-66		
GP. LEADER	5/6/66		
VEH. DES. INT.	5/		
STRUCTURES	5/9	PROJ ENGR	5-13
STRUCTURES	Alderman 5/9	REL GROUP	Botti 5-16-66
WEIGHTS	5/11		

GRUMMAN AIRCRAFT ENGRG CORP
BETHPAGE, L. I., NEW YORK

DEFLECTOR INSTL
DESCENT STAGE-ENG COMPT-UPPER

SIZE B
CODE IDENT NO. 26512
LDW280-52635 B
SCALE NONE
SHEET 1.00 OF 5

ENG 77.1 12-65

01

NAS 9-1100

REVISIONS

CHANGE LTR	ITEM NO.	SHEET NO.	ZONE	GRUMMAN INFO ONLY	DET SPEC	CLASS I	CLASS II	ENGRG ORDER	DESCRIPTION	EFFECTIVITY	DISPOSITION OF EXISTING PARTS REWORK	DISPOSITION OF EXISTING PARTS SCRAP	CHANGED BY AND DATE	ENGRG APPD	GOVT APPD
A	1							Ⓡ	ADDED SHEET 1.10. REMOVED -1 INSTL ADDED -3 INSTL SH 1 OF 4 (WAS) 1 OF 3 GB	NOTED		-1			
B	1	1.10, 2.00 3.00	3A 3B 4A 4B					EO B1	FOR -3, IN F/D & B/M, ADDED NAS1330C06-161(4) & NAS1330C06-241(4). DELETED NAS1330C06-106(4) & NAS1330C06-201(4)	LM-2 THRU LM-6	✓		R. Kaplan 11-4-67 H.D.		
	2	1.00						LEO280-315	FOR -3 ADDED LEM-7 THRU LEM-15 EFF	LM 7(37) THRU LM15(45)	NOT REQ'D				
	3	1.00, 2.00 3.00					✓	EO B3	ADDED LDW360-51260-7 TO -3 INSTL. REMOVED LM-4 THRU LM-15 EFF FROM -3. ADDED -5 INSTL FOR LM-4 THRU LM-15	LM-2 THRU LM-15	✓				
	4	2.00 3.00	5B					EO B4	FOR -3 & -5 INSTL: IN FLD/DWG & B/M LDW280-17725-1 WAS LDW280-17725-11	NOT REQD	NOT REQ'D				
	5	1.00, 2.00 3.00	5B				✓	EO B5 LCD19-1244	REMOVED -3 INSTL REPLACED WITH -5 INSTL. REMOVED LM 6(36) THRU LM-15(45) REQMTS. ON -5 REMOVED LDW 280-17725-1. N/A LDW280-54553 FOR LM-5 WAS LDW280-55553	LM-2 THRU LM-15	✓				
	6	1.00, 2.00 3.00	4A				✓	EO B6 LCD 1244	FOR -5 ADDED N/A LDW420-2386 EFF DVT(70) (1 REQD). ON -5 ADDED LDW280-17725-1 (1 REQD) ADDED -7. FOR -5 ADDED LM 6 THRU LM 15 EFF	DVT (70) LM2(32)- LM15(45)	NOT REQ'D				
	7	1.00, 2.00 3.00	3A 3B 3C 5A 5B 5C 7A 7B			✓		EO B7 LCD1244	ON-5 ADDED LDW280M17638-1 (274 REQD) REMOVED LM2 & DVT EFF: GS551C-06-239(59) REPLACED SA1014-06-2(59): GS551C-06-279(91) REPLACED SA1014-06-3(91) & GS551C-06-319(124) REPLACED SA1014-06-4(124). REVISED SECT A-A. ON-7 LDW280-17725-1 REPLACED LDW280-17725-7; GS551C-06-479(274). REPLACED SA1014-06-2(59)-3(91)&-4(124). ADDED LDW280M17638-1 (274 REQD) & SECT B-B. ADDED N/A LDW280-52553 EFF LM2(32) (1 REQD) & REMOVED DVT(70) EFF	DVT (70) LM2(32)- LM15(45)	✓				

FOR CONTINUATION OF REVISIONS SEE SHEET 1.11

GRUMMAN AIRCRAFT ENGRG CORP, BETHPAGE, L. I., NEW YORK

SIZE	CODE IDENT NO.		
B	26512	LDW280-52635	B Ⓑ
SCALE NONE			SHEET 1.10

ENG 77.3 5-65

01

NAS 9-1100

REVISIONS FOR CONTINUATION OF REVISIONS SEE SHEET ______

CHANGE LTR	ITEM NO.	SHEET NO.	ZONE	GRUMMAN INFO ONLY	DET SPEC	CLASS I	CLASS II	ENGRG ORDER	DESCRIPTION	EFFECTIVITY	DISPOSITION OF EXISTING PARTS REWORK	DISPOSITION OF EXISTING PARTS SCRAP	CHANGED BY AND DATE	ENGRG APPD	GOVT APPD
B	8	1.11, 3.00	7A			✓		EO B8 LCD1244	REF EO-B7: REVISED SECTION B-B ON EO-B7 TO SHOW CORRECT LOCATION OF PARTS. ADDED SH 1.11,	LM-2 THRU LM-15, DVT(70)	NOT REQD		R. Kaplan 11-4-67 R.B. H.D.		
	9	3.00	5C				✓	EO B9	ON -5 & -7 INSTL DRILL .143-.149 (#27 DRILL) WAS DRILL .139-.145 (#28 DRILL)	LM-2 THRU LM-15	✓				
	10	2.00 3.00	3A 3B 3C 4C 5C 5A 7B	P		✓		EO B10 LCD1244 B Ⓑ	ON -5 (REMOVED) GS551C-06-239(59), GS551C-06-279(91) (ADDED) GS551C-06-359(54), GS551C-06-439(106), GS551C-06-399(99), GS551C-06-319(15) WAS(124) IN M/B FOR -5 ADDED E.I. LDW420-2370, SER #1 REV. SECT A-A. ADDED NOTE #1	LM3(33) THRU LM15(45)	✓				

CHG APPROVED												
LTR	GROUP LDR	VEH DES INT	STRUCT	STRUCT	WEIGHTS	RELIABILITY						
B												

GRUMMAN AIRCRAFT ENGRG CORP., BETHPAGE, L. I., NEW YORK

SIZE	CODE IDENT NO.		
B	26512	LDW280-52635	B Ⓑ
SCALE NONE		SHEET 1.11	

ENG 77.16 3-66

01

NAS 9-1100

QTY PER ASSEMBLY							CODE IDENT	PART NO.	I&T	NOMENCLATURE OR DESCRIPTION	MATERIAL	GOVT SPEC	COML SPEC	STOCK SIZE	PROCESS SYM	FINISH NO.	ZONE
					274			GS551C-06-479	E	BOLT	STD PART						
						106		GS551C-06 439	E	BOLT	STD PART						
						99		GS551C-06-399	E	BOLT	STD PART						
						54		GS551C-06-359	E	BOLT	STD PART						
						15		GS551C-06-319	E	BOLT	STD PART						
					4	4		NAS1330C06-241	E	NUT, BLIND RIVET	STD PART						
					120	120		NAS1330C06-201	E	NUT, BLIND RIVET	STD PART						
					95	95		NAS1330C06-161	E	NUT, BLIND RIVET	STD PART						
					55	55		NAS1330C06-106	E	NUT, BLIND RIVET	STD PART						
					274	274		LDW280M17638-1	E	WASHER	SEE DWG						7A
					1	1		LDW280-17725-1	E	DEFLECTOR ASSY	SEE DWG						5B
								LDW280-52635-7	E	DEFLECTOR INSTL					NONE	NONE	4A
								LDW280-52635-5	E	DEFLECTOR INSTL					NONE	NONE	4A
					-7	-5											

SYM OR NO.	PROCESS OR FINISH	GRUMMAN SPEC OR MILITARY SPEC	SYM OR NO.	PROCESS OR FINISH	GRUMMAN SPEC OR MILITARY SPEC	SYM OR NO.	PROCESS OR FINISH	GRUMMAN SPEC OR MILITARY SPEC

I & T: IDENTIFICATION AND TRACEABILITY IN ACCORDANCE WITH :
NONE

GRUMMAN AIRCRAFT ENGRG CORP, BETHPAGE, L. I., NEW YORK

SIZE B
CODE IDENT NO. 26512
LDW280-52635
B ③
SCALE NONE
SHEET 2.00

ENG 77.2 7-65

01

NAS 9-1100

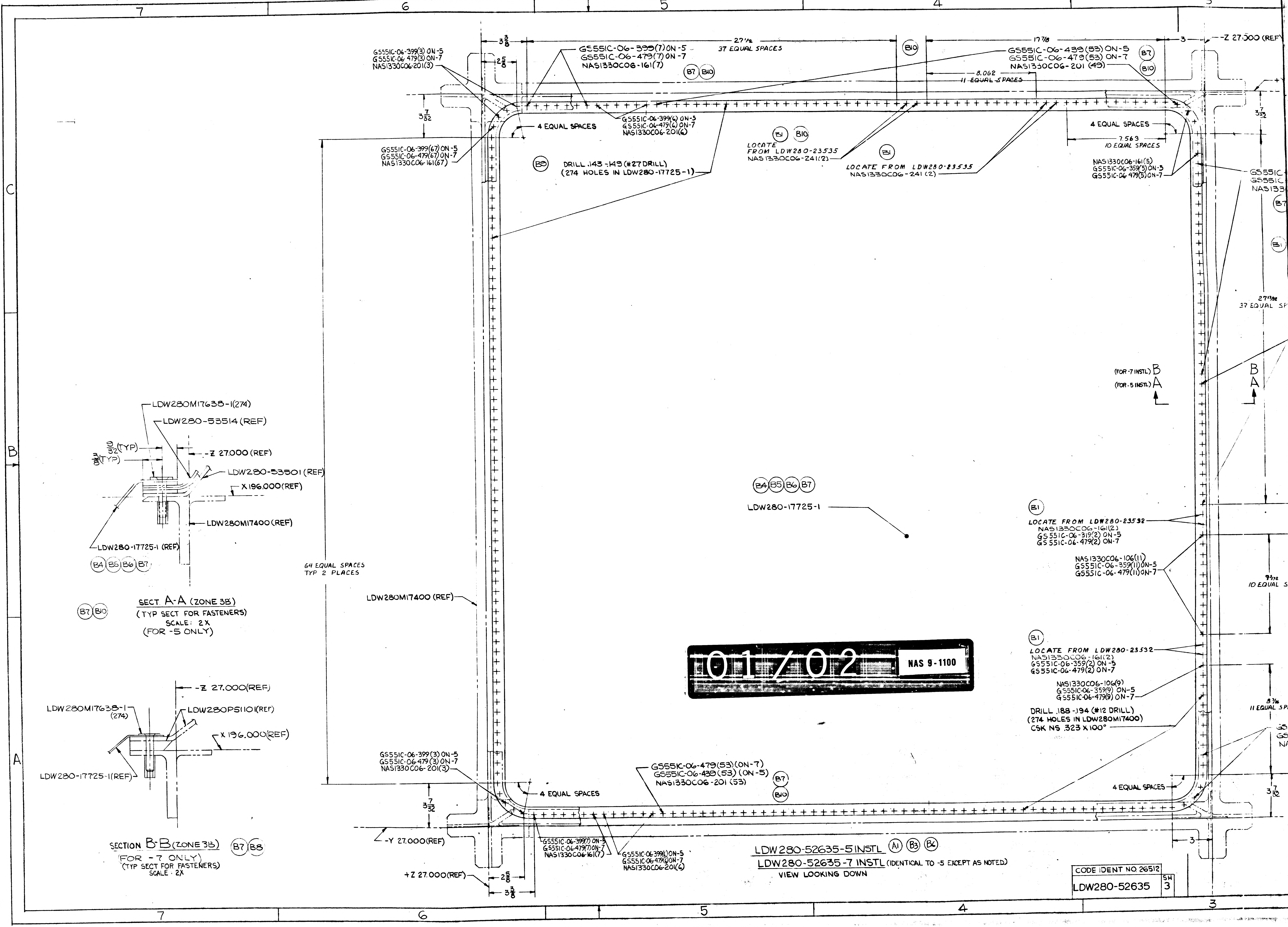
7
6
5
4
3
C
B
A
GS551C-06-399(3) ON-5
GS551C-06-479(3) ON-7
NAS1330C06-201(3)
GS551C-06-399(7) ON-5
GS551C-06-479(7) ON-7
NAS1330C06-161(7)
B7 B10
27 1/2
37 EQUAL SPACES
B10
17 7/8
GS551C-06-439(53) ON-5
GS551C-06-479(53) ON-7
NAS1330C06-201 (49)
B7
B10
-Z 27.000 (REF)
8.062
11 EQUAL SPACES
3 3/8
2 5/8
3 7/32
4 EQUAL SPACES
GS551C-06-399(6) ON-5
GS551C-06-479(6) ON-7
NAS1330C06-201(6)
GS551C-06-399(67) ON-5
GS551C-06-479(67) ON-7
NAS1330C06-161(67)
B9
DRILL .143-.149 (#27 DRILL)
(274 HOLES IN LDW280-17725-1)
B1 B10
LOCATE FROM LDW280-23535
NAS1330C06-241(2)
B1
LOCATE FROM LDW280-23535
NAS1330C06-241 (2)
4 EQUAL SPACES
7.563
10 EQUAL SPACES
NAS1330C06-161(5)
GS551C-06-359(5) ON-5
GS551C-06-479(5) ON-7
GS551C-
GS551C
NAS133
B7
B1
27 17/32
37 EQUAL SP
(FOR -7 INSTL) B
(FOR -5 INSTL) A
B
A
LDW280M17638-1(274)
LDW280-53514 (REF)
9/32 (TYP)
3/8 (TYP)
-Z 27.000 (REF)
LDW280-53501 (REF)
X 196.000 (REF)
LDW280M17400 (REF)
LDW280-17725-1 (REF)
B4 B5 B6 B7
SECT A-A (ZONE 3B)
(TYP SECT FOR FASTENERS)
SCALE: 2X
(FOR -5 ONLY)
B7 B10
64 EQUAL SPACES
TYP 2 PLACES
LDW280M17400 (REF)
B4 B5 B6 B7
LDW280-17725-1
B1
LOCATE FROM LDW280-23532
NAS1330C06-161(2)
GS551C-06-319(2) ON-5
GS551C-06-479(2) ON-7
NAS1330C06-106(11)
GS551C-06-359(11) ON-5
GS551C-06-479(11) ON-7
9 3/32
10 EQUAL SP
B1
LOCATE FROM LDW280-23532
NAS1330C06-161(2)
GS551C-06-359(2) ON-5
GS551C-06-479(2) ON-7
NAS1330C06-106(9)
GS551C-06-359(9) ON-5
GS551C-06-479(9) ON-7
DRILL .188-.194 (#12 DRILL)
(274 HOLES IN LDW280M17400)
CSK NS .323 X 100°
8 3/16
11 EQUAL SPA
GS5
GS5
NA
-Z 27.000(REF)
LDW280M17638-1
(274)
LDW280PS1101(REF)
X 196.000(REF)
LDW280-17725-1(REF)
SECTION B-B (ZONE 3B)
FOR -7 ONLY
(TYP SECT FOR FASTENERS)
SCALE - 2X
B7 B8
GS551C-06-399(3) ON-5
GS551C-06-479(3) ON-7
NAS1330C06-201(3)
4 EQUAL SPACES
3 7/32
-Y 27.000(REF)
GS551C-06-479(53) (ON-7)
GS551C-06-439(53) (ON-5)
NAS1330C06-201 (53)
B7
B10
GS551C-06-399(7) ON-5
GS551C-06-479(7) ON-7
NAS1330C06-161(7)
GS551C-06-399(6) ON-5
GS551C-06-479(6) ON-7
NAS1330C06-201(6)
+Z 27.000(REF)
2 5/8
3 3/8
4 EQUAL SPACES
3 7/32
3
LDW280-52635-5 INSTL A1 B3 B6
LDW280-52635-7 INSTL (IDENTICAL TO -5 EXCEPT AS NOTED)
VIEW LOOKING DOWN
CODE IDENT NO. 26512
LDW280-52635
SH 3

01/02 NAS 9-1100

2/2

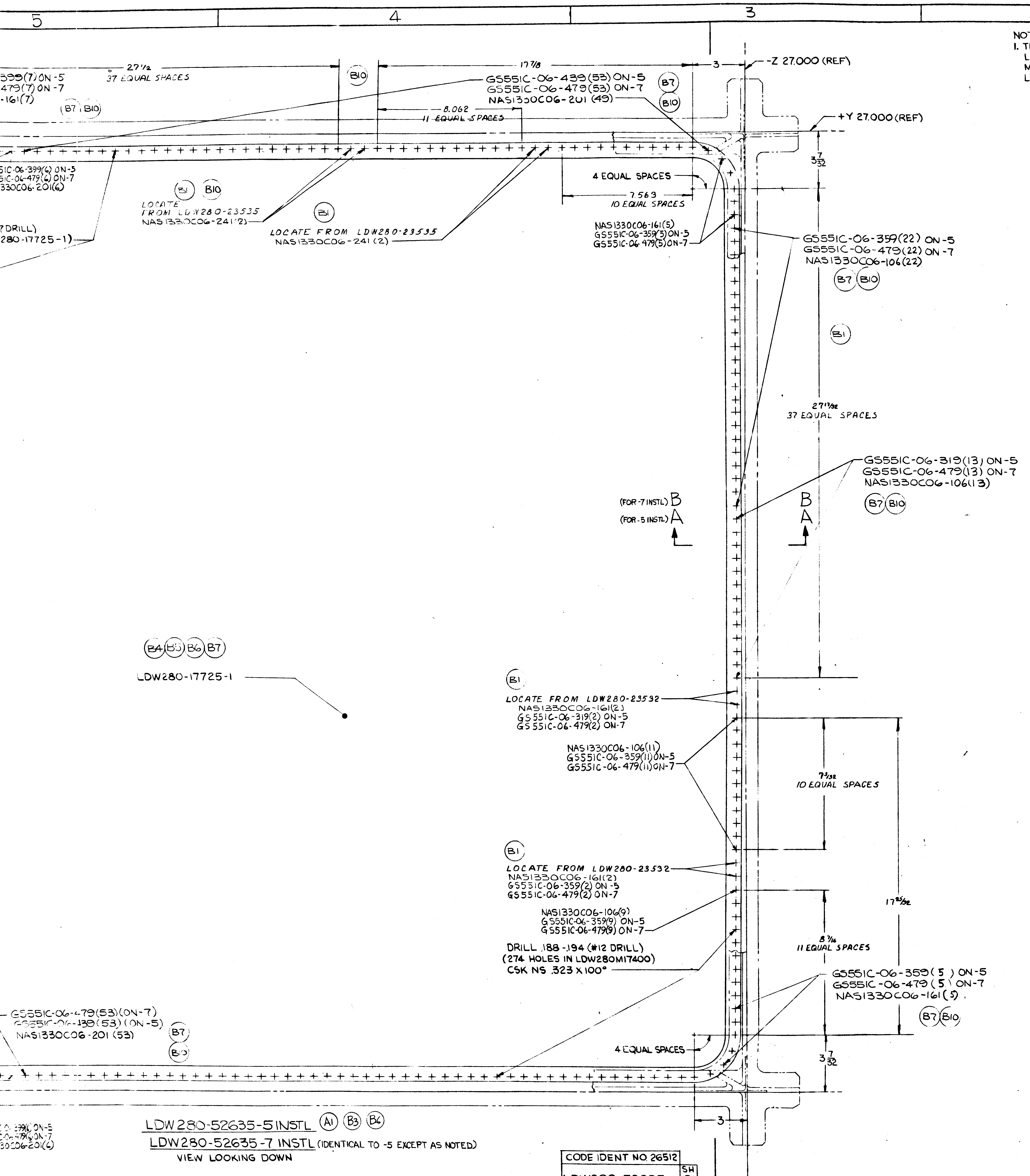
5
4
3
2
1
399(7) ON -5
479(7) ON -7
-161(7)
27½
37 EQUAL SPACES
B7 B10
B10
17⅞
GS551C-06-439(53) ON-5
GS551C-06-479(53) ON-7
NAS1330C06-201 (49)
B7
B10
8.062
11 EQUAL SPACES
3
-Z 27.000 (REF)
+Y 27.000 (REF)
51C-06-399(6) ON-5
51C-06-479(6) ON-7
330C06-201(6)
B1 B10
LOCATE FROM LDW280-23535
NAS1330C06-241(2)
B1
LOCATE FROM LDW280-23535
NAS1330C06-241 (2)
7 DRILL)
280-17725-1)
4 EQUAL SPACES
7.563
10 EQUAL SPACES
3 7/32
NAS1330C06-161(5)
GS551C-06-359(5) ON-5
GS551C-06-479(5) ON-7
GS551C-06-359(22) ON-5
GS551C-06-479(22) ON-7
NAS1330C06-106(22)
B7 B10
B1
27 17/32
37 EQUAL SPACES
GS551C-06-319(13) ON-5
GS551C-06-479(13) ON-7
NAS1330C06-106(13)
B7 B10
(FOR -7 INSTL) B
(FOR -5 INSTL) A
B
A
B4 B5 B6 B7
LDW280-17725-1
B1
LOCATE FROM LDW280-23532
NAS1330C06-161(2)
GS551C-06-319(2) ON-5
GS551C-06-479(2) ON-7
NAS1330C06-106(11)
GS551C-06-359(11) ON-5
GS551C-06-479(11) ON-7
7 3/32
10 EQUAL SPACES
17 25/32
B1
LOCATE FROM LDW280-23532
NAS1330C06-161(2)
GS551C-06-359(2) ON-5
GS551C-06-479(2) ON-7
NAS1330C06-106(9)
GS551C-06-359(9) ON-5
GS551C-06-479(9) ON-7
8 7/16
11 EQUAL SPACES
DRILL .188-.194 (#12 DRILL)
(274 HOLES IN LDW280M17400)
CSK NS .323 X 100°
GS551C-06-359 (5) ON-5
GS551C-06-479 (5) ON-7
NAS1330C06-161(5)
B7 B10
GS551C-06-479(53)(ON-7)
GS551C-06-439(53)(ON-5)
NAS1330C06-201 (53)
B7
B10
4 EQUAL SPACES
3 7/32
3
C-06-399(6) ON-5
C-06-479(6) ON-7
30C06-201(6)
LDW280-52635-5 INSTL A1 B3 B6
LDW280-52635-7 INSTL (IDENTICAL TO -5 EXCEPT AS NOTED)
VIEW LOOKING DOWN
CODE IDENT NO. 26512
LDW280-52635
SH 3

NOTES:

1. THIS DRAWING AFFECTED BY THE FOLLOWING LFM(S). SEE LFM FOR EFFECTIVITY AND MODIFICATION:
LFM420-2370-003

MANUFACTURING OPERATIONS UNLESS OTHERWISE SPECIFIED NOTES CHECKED √ APPLY TO THIS DWG.	
PART NUMBER AND ALL OTHER MARKINGS IN REGION MARKED ☒ USE BOTH SIDES IF NECESSARY.	
FILLET AND INSIDE CORNER RADII TOLERANCES .016R TO .062R ± .010 .063R TO .250R ± .015 OVER .250R ± .030	
DEPTH SHOWN FOR TAPPED HOLES IS FULL THDS. 2-3 IMP THDS. BEYOND PERMISSIBLE.	
EXTERNAL THREAD LENGTH SHOWN INCLUDES 2 IMPERFECT THREADS MAX.	
DO NOT CADMIUM PLATE & PAINT HOLES OR SURFACES MARKED WITH DOUBLE ASTERISK.	
MISMATCH STEP OF ± .005 PERMISSIBLE DUE TO CHANGE OF CUTTERS AT INSIDE INTERSECTING SURFACES.	
DIAMETERS MARKED MUST BE CONCENTRIC WITHIN FULL INDICATOR READING	
HOLES MUST BE KEPT FREE OF CHROME PLATING SOLUTION.	
ALL DIMENSIONS SHOWN TO BE MET AFTER CADMIUM PLATING. THICKNESS OF PLATE .0003 MIN. TO .0005 MAX. MIN. THICKNESS TO BE .0002 ON THREADED AREAS. NO ALLOWANCE FOR PLATING IN HOLES	
125 √ SURFACE ROUGHNESS INCLUDING REAMED HOLES PER MIL-STD-10	
200 √ FOR ALL DRILLED HOLES	
REMOVE ALL BURRS. BREAK ALL EDGES .015-.031	
INSPECTION INFORMATION MINIMUM PERMISSIBLE AVERAGE EDGE DISTANCE MARKED IS	
SYMBOL √ DENOTES SURFACE TO BE MACHINED	
UNLESS OTHERWISE SPECIFIED TOLERANCE ON FLANGES IS ± 1/32	
LENGTHS OF AN, NAS & MS AL ALY RIVETS SHORTER THAN 1 INCH ARE NOT SPECIFIED.	
TOLERANCE ON LOFTED DELINEATIONS IS	

DWG SIZE 34 X 70

PRINTING INFO ONLY
FULL SIZE SHEET AREA (36 X 72) = 18.00 SQ. FT.
1/2 SIZE SHEET AREA (1/4 OF FULL) = 4.50 SQ. FT.

PRINT TRIM LINE

LDW280-52635 B

LDW280-52635 B

02/02 NAS 9-1100

	GRUMMAN AIRCRAFT ENGRG CORP., BETHPAGE, L. I., NEW YORK			
	SIZE J	CODE IDENT NO. 26512	LDW280-52635	B
LEM				
MODEL OR END ITEM	SCALE HALF & AS NOTED		SHEET 3.00	

ENG 32.1 REV 3-65

GRUMMAN AIRCRAFT ENGINEERING CORP.
CODE IDENT NO. 26512
ENGINEERING ORDER

DWG. NO. LDW280-52635
EO NO. C1
CONTROL INFO NO. LM5-17714

ON-7 F/D +B/M

GS551C-06-479 (274)
SHOULD BE
GS551C-06-559 (274)

(REF EO87)

RELEASED BY LIAISON

DETAIL SPEC REQ		CL II ENGRG CHG	✓	CL I ENGRG CHG

(5)

REASON FOR EO: SHIM, PART TOL. ETC REQUIRE LONGER SCREW

DESCRIPTION OF EO: ON-7 F/D+B/M GS551C-06-559 (274) WAS GS551C-06-479 (274)

GAEC EO RELEASE ®

MODEL	EFFECTIVITY		
	PROCURING ACTIVITY NO.	GAEC UNIT NO.	SUB CONTR UNIT NO.
LM		LM-2 (32)	

DRAWING CHANGE REQD		DISPOSITION OF PARTS	
✓		✓	
REVISE DWG	RECORD EO	REWORK	SCRAP

APPROVED BY								
DATE	1/3/68			—	12-28-67	12-28-67	1/5/68	12-29-67
12-28-67	VDI	SUPPORT	RELIAB. GROUP	GROUP LEADER	STRESS GROUP	LIAISON ENGRG	PROJ ENGRG	~~[illegible]~~

PRIORITY	DRAWING TITLE	DRAWING NO.	EO NO.
C	DEFLECTOR INSTL – D/S ENGINE COMP ~ UPPER	LDW280-52635	C1

ISSUED BY & LIAISON J. GRASSIANO X86755 SECTION VDI GROUP NO. 280 PL 25

01

NAS 9-1100

GRUMMAN AIRCRAFT ENGINEERING CORP.
CODE IDENT NO. 26512
ENGINEERING ORDER

ENG 32.1 REV 3-65

DWG. NO. LDW280-52635
EO NO. C2
CONTROL INFO NO. LM-5-17723

IN FLD (ON-7)

(ADD) NOTE ✱
GB510F-06-8 MAYBE USED AS ALT
FOR GS551C-06-559. IT'S PERSMISSIBLE
TO HAVE HEAD OF SCREW ABOVE WASHER.

RELEASED BY LIAISO

✱ USE NEXT AVAILABLE NOTE #

DETAIL SPEC REQ ☐ CL II ENGRG CHG ☑ CL I ENGRG CHG ☐

(5)

REASON FOR EO: HARDWARE NOT AVAILABLE

DESCRIPTION OF EO: IN FLD (ON-7) ADDED NOTE ✱

GAEC EO RELEASE: 32 05 025

MODEL	EFFECTIVITY		
	PROCURING ACTIVITY NO.	GAEC UNIT NO.	SUB CONTR UNIT NO.
LM		LM2(32)	

DRAWING CHANGE REQD: REVISE DWG ✓ RECORD EO

DISPOSITION OF PARTS: REWORK ✓ SCRAP

	VD1	SUPPORT	RELIAB. GROUP	GROUP LEADER	STRESS GROUP	LIAISON ENGRG	PROJ ENGRG	
APPROVED BY				—	JFJ	CH		
DATE	1/5/68			—	1-2-68	12-30-67	1/5/68	1/11/68

PRIORITY: C

DRAWING TITLE: DEFLECTOR INSTL - D/S ENGINE COMP ~ UPPER

DRAWING NO.: LDW280-52635

EO NO.: C2

ISSUED BY LIAISON M.D. REYES X86755 SECTION VD1 GROUP NO. 335 PL 25

01

NAS 9-1100

GRUMMAN AIRCRAFT ENGINEERING CORP.
CODE IDENT NO. 26512
ENGINEERING ORDER

ENG 32.1 REV 3-65

DWG. NO. LDW 280-52635
EO NO. C3
CONTROL INFO NO. LM5-19398

THIS IS A REV OF EO C2

IN FLD (ON -7)

ADD ----

SHOULD BE

IN FLD (ON-5 AND -7)

ADD ----

RELEASED BY LIAISON

DETAIL SPEC REQ	☐	CL II ENGRG CHG	☑	CL I ENGRG CHG	☐

REASON FOR EO: HARDWARE NOT AVAILABLE

DESCRIPTION OF EO: REF EO C2
IN FLD (ON -7)
S/B IN FLD (ON -5 AND -7)

GAEC EO RELEASE (5) C

APPROVED BY	JH			Z	VJ	CH	Jap
DATE	4/20				3-29-68	3-29-68	4/20
	VDI	SUPPORT	RELIAB. GROUP	GROUP LEADER	STRESS GROUP	LIAISON ENGRG	PROJ ENGRG

Jm 3-30-68

MODEL	EFFECTIVITY: PROCURING ACTIVITY NO.	EFFECTIVITY: GAEC UNIT NO.	EFFECTIVITY: SUB CONTR UNIT NO.	DRAWING CHANGE REQD: REVISE DWG	DRAWING CHANGE REQD: RECORD EO	DISPOSITION OF PARTS: REWORK	DISPOSITION OF PARTS: SCRAP
LM		LM2(32) THRU LM15(45)		✓		✓	

PRIORITY	DRAWING TITLE	DRAWING NO.	EO NO.
C	DEFLECTOR INSTL - D/S ENG. COMP. ~ UPPER	LDW280-52635	C3

CH ISSUED BY LIAISON R. GAILLARD X86755 SECTION VDI GROUP NO. 335 PL 25

01

NAS 9-1100

ENG 32.2 REV 3-65

GRUMMAN AIRCRAFT ENGINEERING CORP.
CODE IDENT NO. 26512
ENGINEERING ORDER

DWG. NO. LEO 280
EO NO. 1170
CONTROL INFO NO. LDW 280B5397

REVISE THE NEXT ASSEMBLY FOR THE FOLLOWING PARTS
EFFECTIVE LM-6(36) THRU LM-15(45)

DRAWING NO.	DASH* NO.	**NEW NEXT ASSY	***EXISTING NEXT ASSY	CHANGE NO	DWG TITLE
LDW 280-28816	-17	LDW 280-56553	LDW 280-54553	A7	SEE DWG.
LDW 280-52635	-5	LDW 280-56553	LDW 280-54553	C4	
LDW 280-28835	-9	LDW 280-56553	LDW 280-54553	C1	
LDW 280-51642	-5	LDW 280-56553	LDW 280-54553	B1	
LDW 280-51818	-1	LDW 280-56553	LDW 280-54553	A6	
LDW 280-53505	-1	LDW 280-56553	LDW 280-54553	A2	
LDW 280-53501	-21	LDW 280-56553	LDW 280-54553	G2	
LDW 280-53504	-3	LDW 280-56553	LDW 280-54553	B4	SEE DWG

01
NAS 9-1100

SWIP

DETAIL SPEC REQ ☐ CL II ENGRG CHG ☐ CL I ENGRG CHG ☑ LCD 3179 ECP A-062-R PK 9 (5)

REASON FOR EO: REDUCTION OF THERMAL SHIELDING DUE TO REVISION OF PLUME HEATING RATES

DESCRIPTION OF EO: FOR * NEXT ASSY ** WAS ***

GAEC C RO RELEASE: 10/

MODEL	PROCURING ACTIVITY NO.	GAEC UNIT NO.	SUB CONTR UNIT NO.
LM		LM6(36)	
		THRU LM15(45)	

DRAWING CHANGE REQD: REVISE DWG ✓ RECORD EO
DISPOSITION OF PARTS: NOT REQ (REWORK / SCRAP)

	VD1	~~SUPPORT~~ THEM	RELIAB. GROUP	GROUP LEADER	STRESS GROUP	LIAISON ENGRG	PROJ ENGRG	
APPROVED BY	JnS	D.R			W.H		JAP	
DATE	10/17/68	10/17/68		10/16/68	10/16/68		10/17/68	

PRIORITY: C
DRAWING TITLE: SEE DRAWING
DRAWING NO.: LEO 280
EO NO.: 1170

11/1/68 F.L.
ISSUED BY ED MORRIS EXT 86046 SECTION V.D.1. GROUP NO. 33 PL 25

ENG 32.1 REV 3-68

GRUMMAN AIRCRAFT ENGINEERING CORP.
CODE IDENT NO. 26512
ENGINEERING ORDER

DWG. NO. LDW280-52635 EO NO. C5
CONTROL INFO NO. LM-5-20959

FOR -5 INSTL.~

IN F/D ~ ADD: NOTE *

IT IS PERMISSIBLE TO VARY THE LENGTH OF GS551C-06 SCREWS TWO(2) GRIP LENGTHS ALONG THE SIDES OF THE CAPSTRIP AND FOUR(4) GRIP LENGTHS IN THE CORNERS.

IN B/M ~ ADD: ALTERNATE HARDWARE
GS551C-06-479 }
GS551C-06-519 } QTY. ~ AS REQ'D.
GS551C-06-559 }
FOR "ALL" GS551C-06 HARDWARE ~ ADD: SEE NOTE *

FOR * - USE NEXT AVAILABLE NO..

DETAIL SPEC REQ		CL II ENGRG CHG	✓	CL I ENGRG CHG	

REASON FOR EO: EXCESSIVE TOLERANCE BUILD-UP ON SHIELD & BLANKETS

DESCRIPTION OF EO: FOR -5 IN F/D ~ ADDED: NOTE *, IN B/M ADDED: GS551C-06-479 } GS551C-06-519 } GS551C-06-559, QTY AS REQ'D PER NOTE *, FOR ALL GS551C-06 HDWE. {ADDED: * SEE NOTE

(5)
GAEC C5 EO RELEASE

MODEL	PROCURING ACTIVITY NO.	GAEC UNIT NO.	~~SUB CONTR UNIT NO.~~
LM		LM-5(35) Thru LM-15(45)	

DRAWING CHANGE REQD		DISPOSITION OF PARTS	
✓		✓	
REVISE DWG	RECORD EO	REWORK	SCRAP

APPROVED BY	JP				RH		JP	
DATE	11/22/68			11/22	11-12-68	11/4/68	11/22/68	11/13/68
	JVI	SUPPORT	RELIAB. GROUP	GROUP LEADER	STRESS GROUP	LIAISON ENGRG	PROJ ENGRG	~~GOVT~~

PRIORITY: C
DRAWING TITLE: ~ DEFLECTOR INSTL. ~ DESCENT STAGE ~ ENG. COMPT. ~ UPPER
DRAWING NO.: LDW280-52635
EO NO.: C5

ISSUED BY LIAISON GM Green X86755 68119 SECTION VEH. DES. INT. GROUP NO. 335 PL 25

ENG 32.2 REV 3-65

GRUMMAN AIRCRAFT ENGINEERING CORP.
CODE IDENT NO. 26512
ENGINEERING ORDER

DWG. NO. LEO 280 | EO NO. 1292
CONTROL INFO NO. LDW280B7082

IN M/B FOR DASH NUMBERS LISTED BELOW, CHANGE N/A AS NOTED. QUANTITY REMAINS THE SAME
EFF LM-8(38) THRU LM-15(45).

DRAWING NO.	DASH NO.	N/A WAS	N/A IS	CHG LETTER
LDW280-28583	-53	LDW280-56553	LDW280-58553	C3
-28816	-17			B1
-28835	-9			C3
-51560	-7-1			C7
-51642	-5-1			B3
-51818	-1			A7
-52635	-5			C6
-52822	-13			A9
-53501	-21			G4
-53504	-3			B6
-53505	-1			A3
-53512	-1			B1
-53513	-5			B1
-53514	-410-65			D1
-53644	-23			A6
-53646	-31			B2
-53649	-21			A7
-54506	-1			A2
-54568	-5			A3
-54600	-1-1			A4
-56671	-1			A1
-56731	-10-3			A3
-66510	-3			B4
LDW280-66661	-3	LDW280-56553	LDW280-58553	A5

DETAIL SPEC REQ ☐	CL II ENGRG CHG ☐	CL I ENGRG CHG ✓	LCD 3179 CCA1278 PKG 50 ECP A062 (5)

REASON FOR EO: CHANGE 1/2 MIL H FILM TO 1/4 MIL H FILM

DESCRIPTION OF EO: SEE ABOVE

GAEC EO RELEASE: 2/27/9

MODEL	PROCURING ACTIVITY NO.	GAEC UNIT NO.	SUB CONTR UNIT NO.
LM		LM-8(38)	
		THRU	
		LM-15(45)	

DRAWING CHANGE REQD: REVISE DWG ✓ | RECORD EO
DISPOSITION OF PARTS: NOT REQ'D (REWORK | SCRAP)

APPROVED BY		MMR		98t				
DATE	2/13/69	2/17/69		2/12/69	2/13/69		2/17/69	2/27/69
	VDI	SUPPORT	RELIAB. GROUP	GROUP LEADER	STRESS GROUP	LIAISON ENGRG	PROJ ENGRG	

PRIORITY: C
DRAWING TITLE: SEE DWG.
DRAWING NO.: LEO 280
EO NO.: 1292

6DR022469
ISSUED BY W. KAY x87222/D. SHAPIRO x87222 SECTION V.D.I. GROUP NO. 335 PL 25

01

NAS 9-1100

ENG 32.1 REV 3-65

GRUMMAN AIRCRAFT ENGINEERING CORP.
CODE IDENT NO. 26512
ENGINEERING ORDER

DWG. NO. LEO 280
EO NO 1460
CONTROL INFO NO. LDW280B7454

FOR THE DWGS LISTED BELOW DELETE LM-15 (45) EFF FROM ALL DASH NOS. ✳

DWG NO.	CHANGE NO	DWG NOMENCLATURE
LDW280-52635	C7	SEE DWG
-52683	A5	
-52723	B3	
———		
-52795	C1	
-52822	B1	
-53501	G9	
-53502	D1	
-53503	G3	
LDW280-53504	B7	SEE DWG

✳ APPLICABLE DASH NOS

DETAIL SPEC REQ	☐	CL II ENGRG CHG	☐	CL I ENGRG CHG	☑	LCD3587 PKG 56 PG. 1-2 CCA 1821 (5)

REASON FOR EO: LM-15(45) NO LONGER REQD

DESCRIPTION OF EO: DELETED LM-15(45) EFF FROM —✳

GAEC EO RELEASE: VK 5/13/69

MODEL	PROCURING ACTIVITY NO.	GAEC UNIT NO.	SUB CONTR UNIT NO.
LM		LM-15(45)	

DRAWING CHANGE REQD: REVISE DWG ✓ RECORD EO
DISPOSITION OF PARTS: REWORK SCRAP ✓

APPROVED BY	VDI	SUPPORT	RELIAB. GROUP	GROUP LEADER	STRESS GROUP	LIAISON ENGRG	PROJ ENGRG	
DATE	4/8/69			4-2-69	4/2/69		4/9/69	5/13/69

PRIORITY: C
DRAWING TITLE: SEE DWG
DRAWING NO. LEO 280
EO NO. 1460

852869
ISSUED BY MEVORAH /THORJUSEN X86046 SECTION VEH DES INT GROUP NO. 335 25

01

NAS 9-1100

ENG 32.1 REV 3-65

GRUMMAN AIRCRAFT ENGINEERING CORP.
CODE IDENT NO. 26512
ENGINEERING ORDER

DWG. NO. LEO280
EO NO. 1852
CONTROL INFO NO. LDW280B9840

REVISE THE NIA FOR THE FOLLOWING DWGS.
EFF: LM-10(40) THRU LM-14(44)

DRAWING NO. *	N/A IS **	N/A WAS ***	DWG. TITLE	CHG. LTR
✓ LDW280-28816-17	LDW280-60553	LDW280-58553	SEE DWG.	B3
✓ LDW280-51560-7-1				D2
x				
✓ LDW280-52635-5				C8
LDW280-52822-13				B2
x		LDW 280-58553		
LDW280-28583-9,-10,-11		LDW 280-56553		C6
LDW280-66522-1-1	LDW280-60553	LDW280-58553	SEE DWG.	A8

8,9

DETAIL SPEC REQ	☐	CL II ENGRG CHG	☐	CL I ENGRG CHG	☑	LCD3994 PKG92 (5)

REASON FOR EO: REDESIGN OF DIS THERMAL SHIELD FOR LMMP

DESCRIPTION OF EO: IN MOD. BLK. FOR *, NIA **(WAS) ***

GAEC EO RELEASE: 2/27/70

MODEL	PROCURING ACTIVITY NO.	GAEC UNIT NO.	SUB CONTR UNIT NO.
LM		LM-10(40)	
		THRU	
		LM-14(44)	

DRAWING CHANGE REQD: ✓ REVISE DWG / RECORD EO

DISPOSITION OF PARTS: NOT REQ'D — REWORK / SCRAP

APPROVED BY	VDI	~~SUPPORT~~ THERMO	RELIAb. GROUP	GROUP LEADER	STRESS GROUP	LIAISON ENGRG	PROJ ENGRG	
					NM			
DATE	2-26-70	2/26/70		2/26/70	2/26/70		2-26-70	2-26-70

PRIORITY: C
DRAWING TITLE: SEE ABOVE
DRAWING NO.: LEO 280
EO NO.: 1852

CDR022670
ISSUED BY D. SHAPIRO/G. HANSMANN X87222 SECTION VDI GROUP NO. 335 PL 25

01 NAS 9-1100

LDW280-52636

MODEL OR END ITEM	NEXT ASSY	MODULE OR SER NO.	REQD PER MODULE OR END ITEM
LEM	LDW280-53509	LEM-3(33)	1
LEM	LDW280-52509	LEM-2(32)	1
PART NO. LDW280-52636-1		GAEC SCH NO. 50-1	✓

MODEL OR END ITEM	NEXT ASSY	MODULE OR SER NO.	REQD PER MODULE OR END ITEM
PART NO.		GAEC SCH NO.	

MODEL OR END ITEM	NEXT ASSY	MODULE OR SER NO.	REQD PER MODULE OR END ITEM
PART NO.		GAEC SCH NO.	

SH REV STATUS: FOR DESCRIPTION OF REV SEE SUBQ SH

SHEET	1.00		2.00	3.00						
REV										
SHEET										
REV										
SHEET										
REV										

LAST SECT LTR USED	C	GRUMMAN REL INFO		
LAST DASH NO. USED	-1	PRIM NO. 207	(Idoo1) MP12	BJS 6.6

UNLESS OTHERWISE SPECIFIED DIMENSIONS ARE IN INCHES.
TOLERANCE UNLESS SPECIFIED
FRACTIONS - DECIMALS - ANGLES
± 1/64 ±.020 ± 1/2°

ORIG DWG AUTH
DETAIL SPEC REQUIREMENT
CLASS II ENGRG CHANGE
CLASS I ENGRG CHANGE

CONTRACT NO. NAS 9-1100
LINE ITEM #1
DOCUMENTATION TYPE II

DRAWN BY	A. CINO 5/26/66	RELIABILITY	
LAYOUT BY	A. CINO 5/26/66		
CHECKED BY			
GR. LEADER	6/3/66		
VEH. DES. INT	6/3		
STRUCT.	WB NJM EB 6/6/66	PROJ ENGR	Plunkett 8 Jun 66
STRUCT.	Hilderman 6/6	REL GROUP	Botti 6-11-66
WEIGHTS	W. G. Manderas 6/8		

GRUMMAN AIRCRAFT ENGRG CORP
BETHPAGE, L. I., NEW YORK

NUT PLATE INSTALLATION
DESCENT STAGE ~ SCIENTIFIC EQUIPMENT BAY ~
LANDING RADAR ~ INSTRUMENTATION SPT

SIZE	CODE IDENT NO.	
B	26512	LDW280-52636
SCALE	NONE	SHEET 1.00 OF 3

ENG 77.1 12-65

QTY PER ASSEMBLY																	
						-1	CODE IDENT	PART NO.	I&T	NOMENCLATURE OR DESCRIPTION	MATERIAL	GOVT SPEC	COML SPEC	STOCK SIZE	PROCESS SYM	FINISH NO.	ZONE
								NAS1097AD3	E	RIVET	STD PART						
						4		NAS697C06L	E	NUT PLATE	STD PART						
								LDW280-52636-1	E	NUT PLATE INSTL					NONE	NONE	

SYM OR NO.	PROCESS OR FINISH	GRUMMAN SPEC OR MILITARY SPEC	SYM OR NO.	PROCESS OR FINISH	GRUMMAN SPEC OR MILITARY SPEC	SYM OR NO.	PROCESS OR FINISH	GRUMMAN SPEC OR MILITARY SPEC

I & T: IDENTIFICATION AND TRACEABILITY IN ACCORDANCE WITH : NONE

GRUMMAN AIRCRAFT ENGRG CORP, BETHPAGE, L. I., NEW YORK

SIZE	CODE IDENT NO.	
B	26512	LDW280-52636

SCALE NONE

SHEET 2.00

ENG 77.2 7-65

01

NAS 9-1100

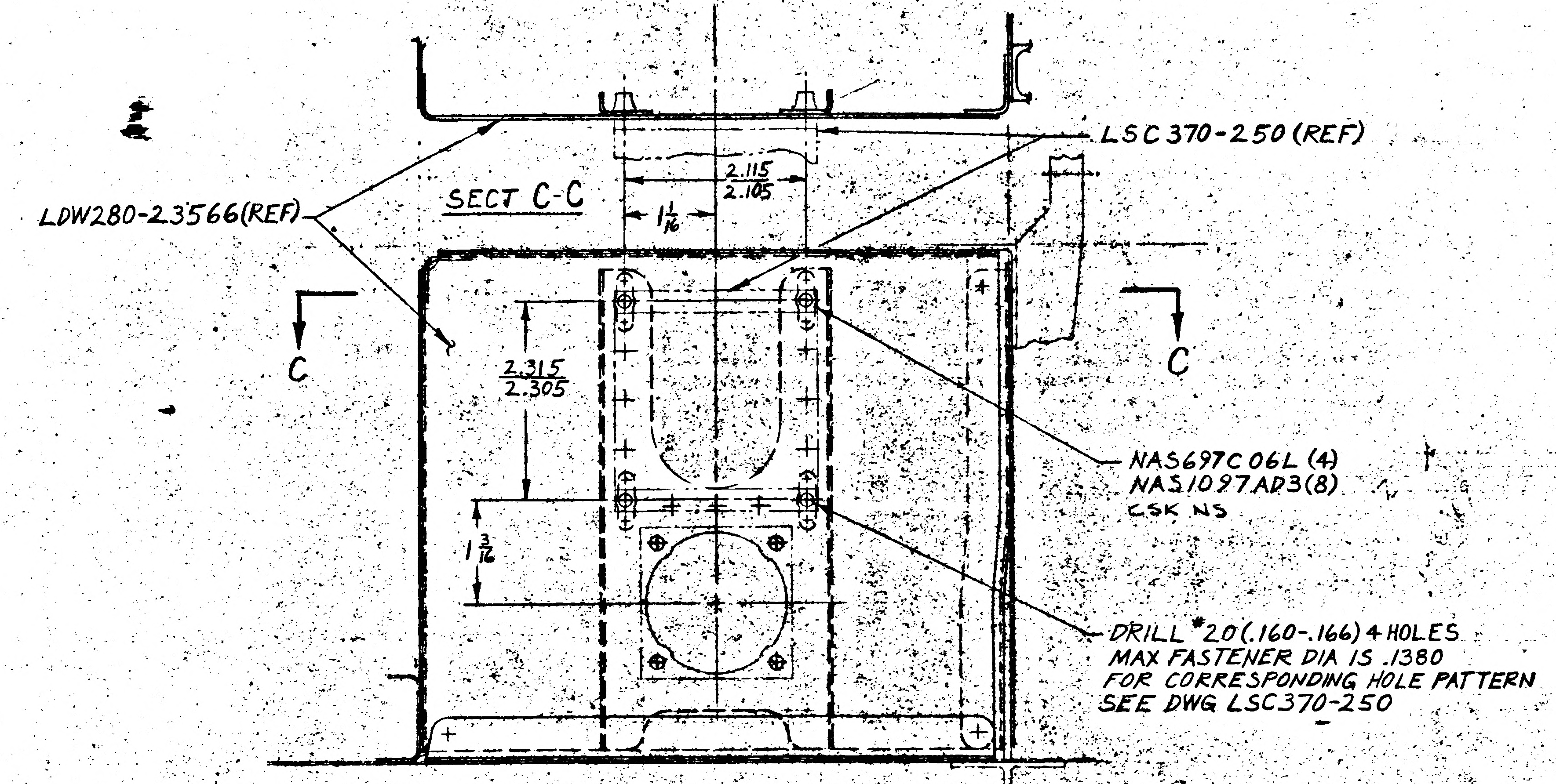
LSC370-250 (REF)
LDW280-23566 (REF)
SECT C-C
2.115
2.105
1 1/16
C
C
2.315
2.305
1 3/4
NAS697C06L (4)
NAS1097AD3 (8)
CSK NS
DRILL #20 (.160-.166) 4 HOLES
MAX FASTENER DIA IS .1380
FOR CORRESPONDING HOLE PATTERN
SEE DWG LSC370-250

VIEW B-B

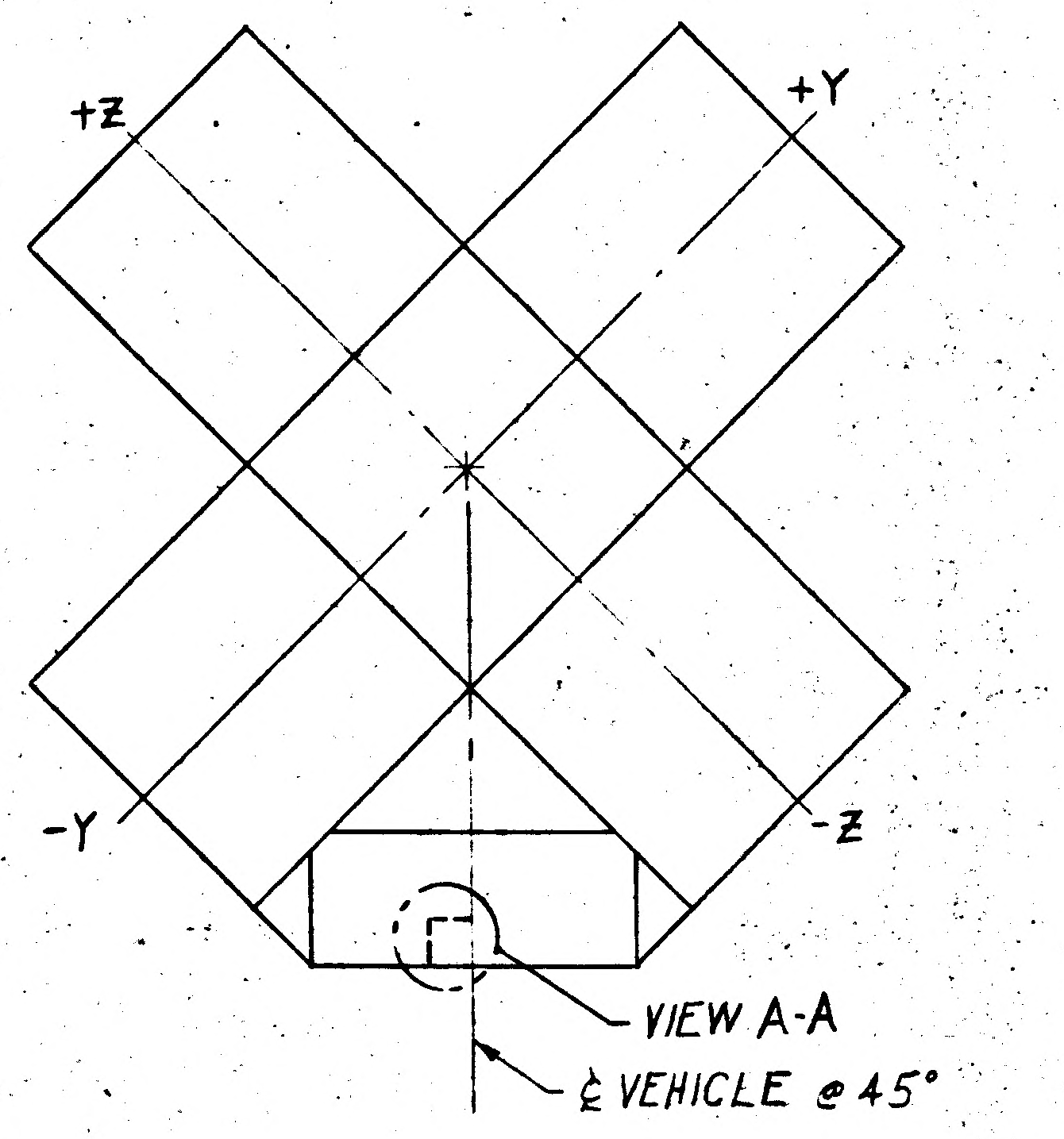
+Z
+Y
-Y
-Z
VIEW A-A
℄ VEHICLE @ 45°

VIEW LOOKING DOWN AT DESCENT STAGE
NO SCALE

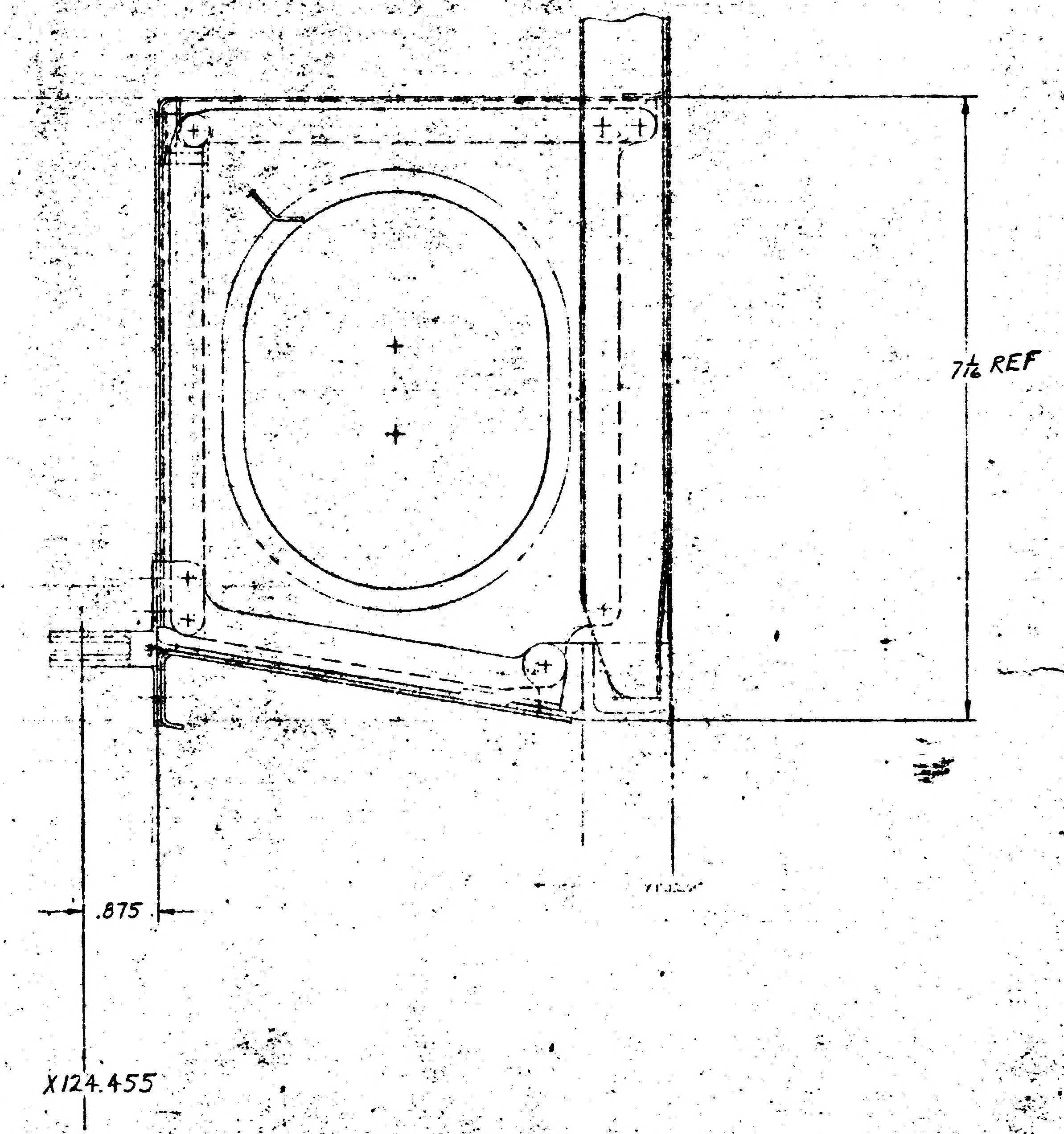
7 1/2 REF
.875
X124.455

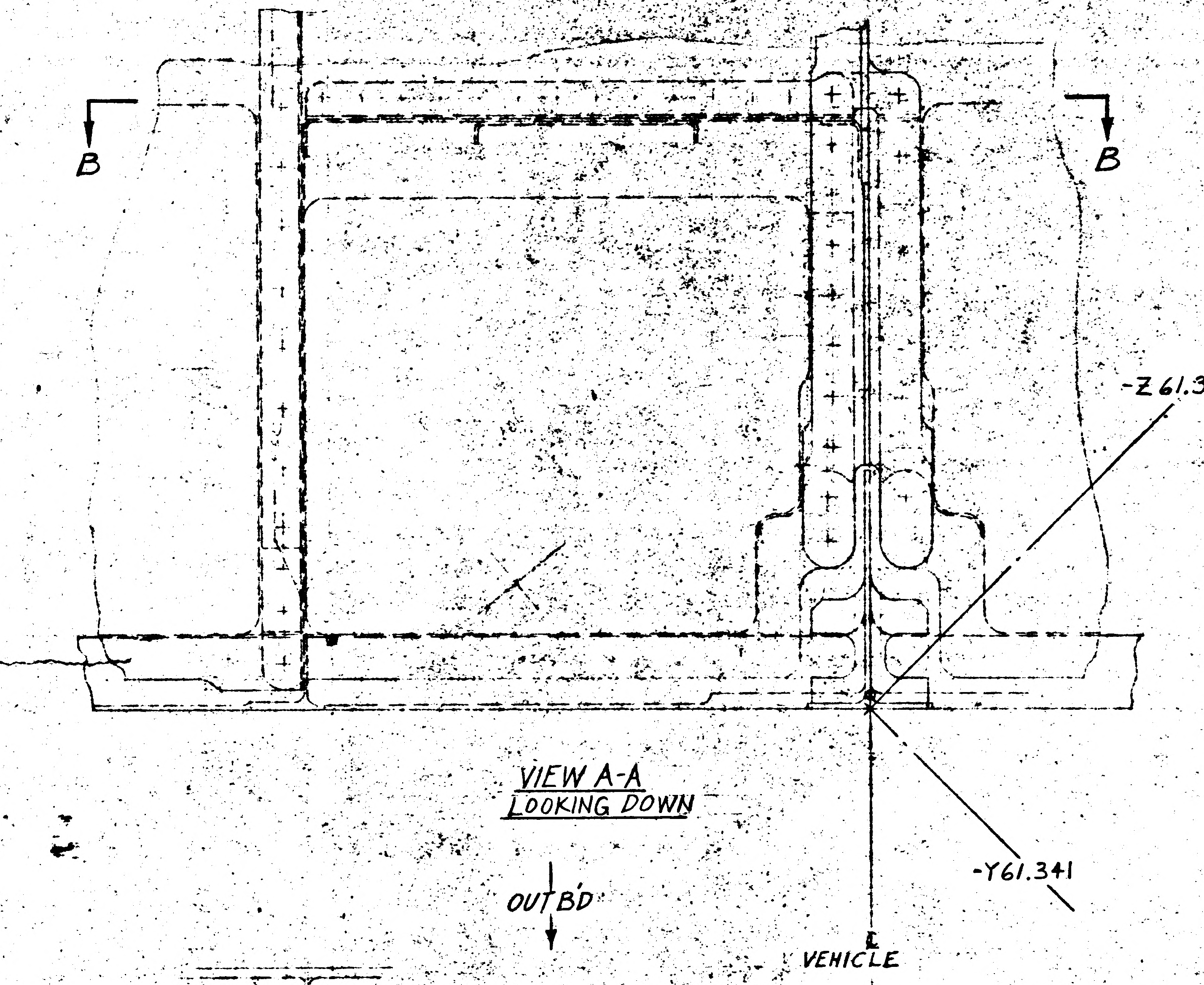
B
B
-Z 61.341
-Y61.341
OUTBD
℄ VEHICLE

VIEW A-A
LOOKING DOWN

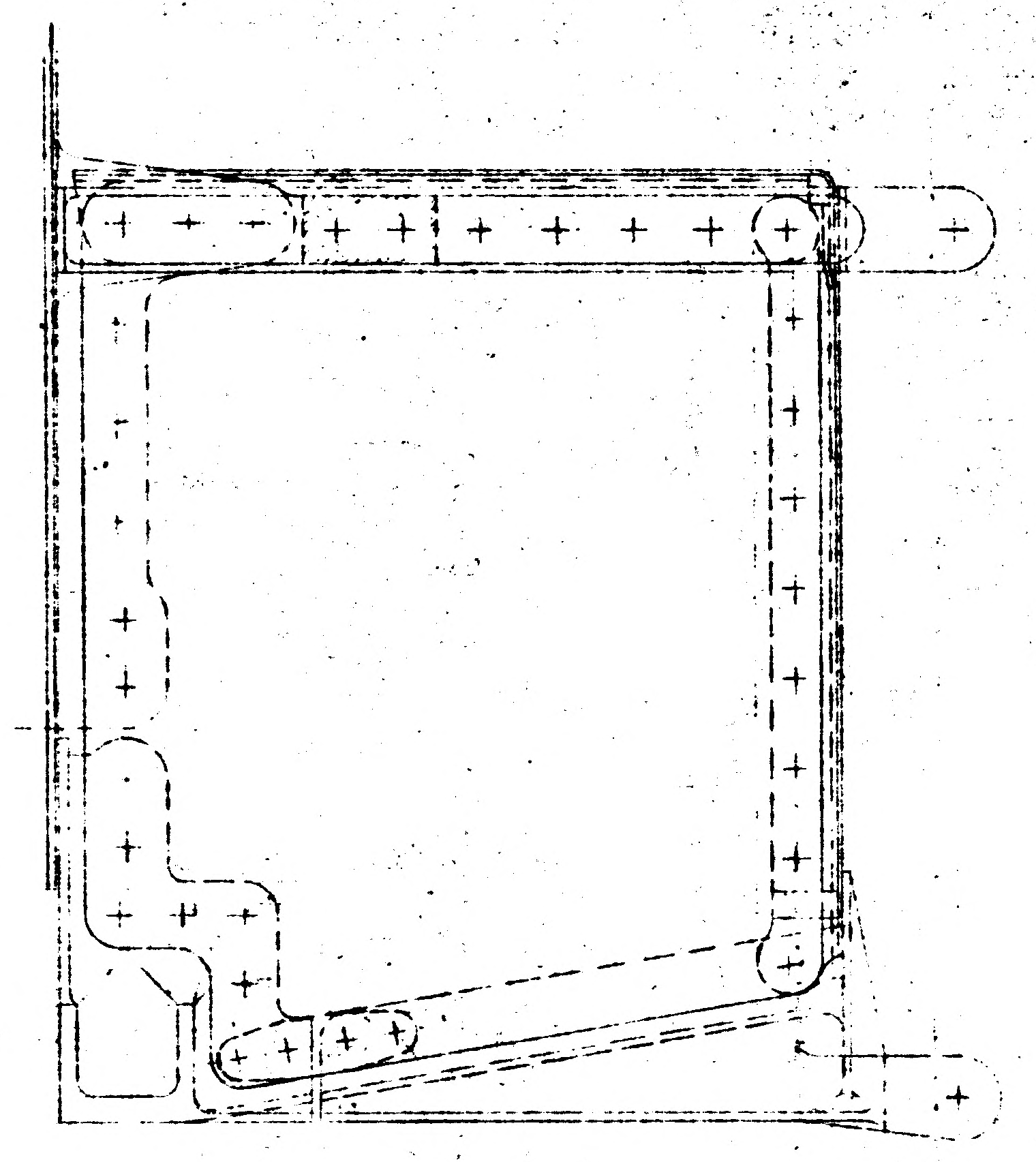

LDW280-52636-1 INSTL

01/02 NAS 9-1100

(REF)

(4)
3(8)

0-.166) 4 HOLES
DIA IS .1380
NDING HOLE PATTERN
370-250

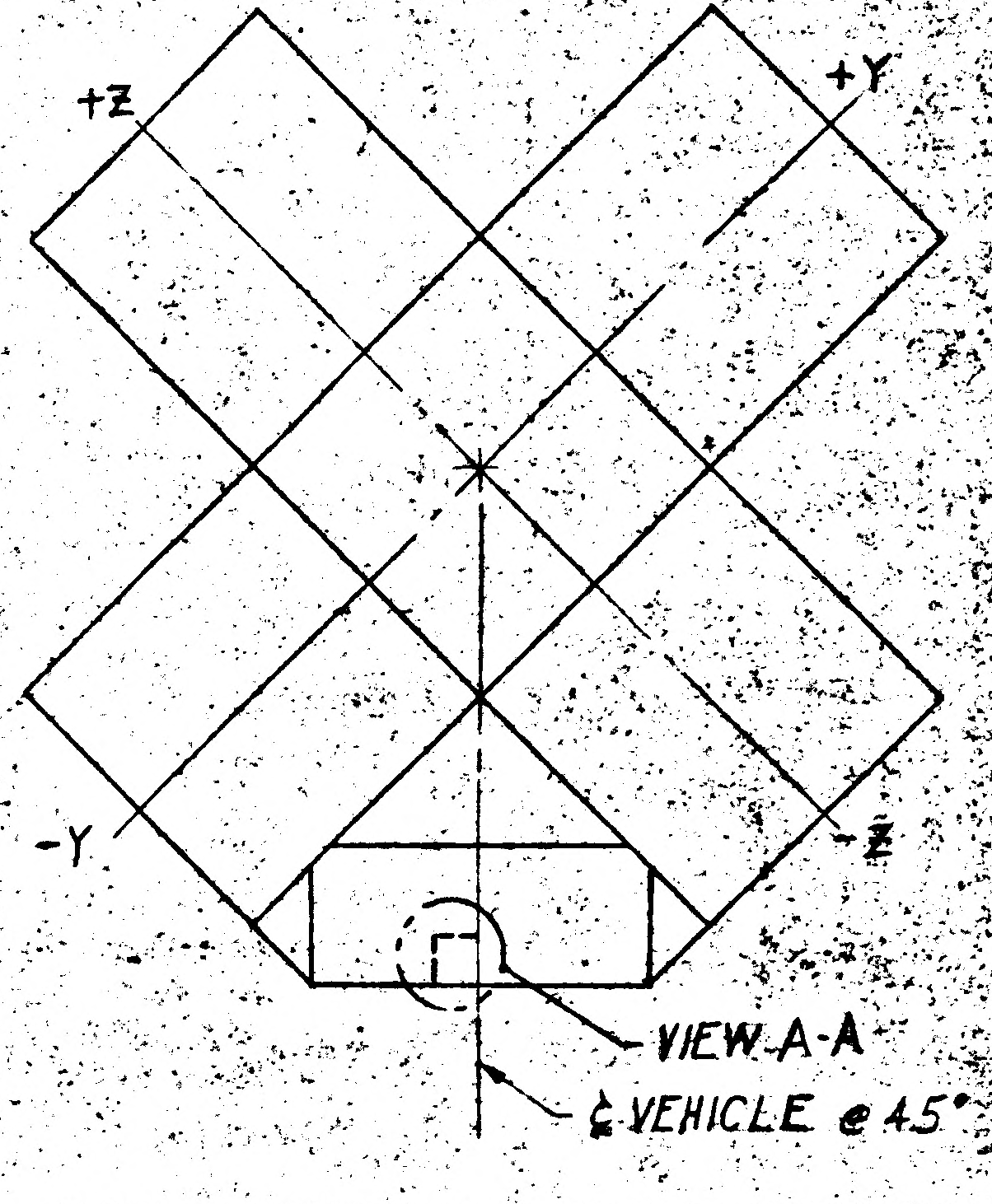

VIEW LOOKING DOWN AT DESCENT STAGE
NO SCALE

Z 61.341

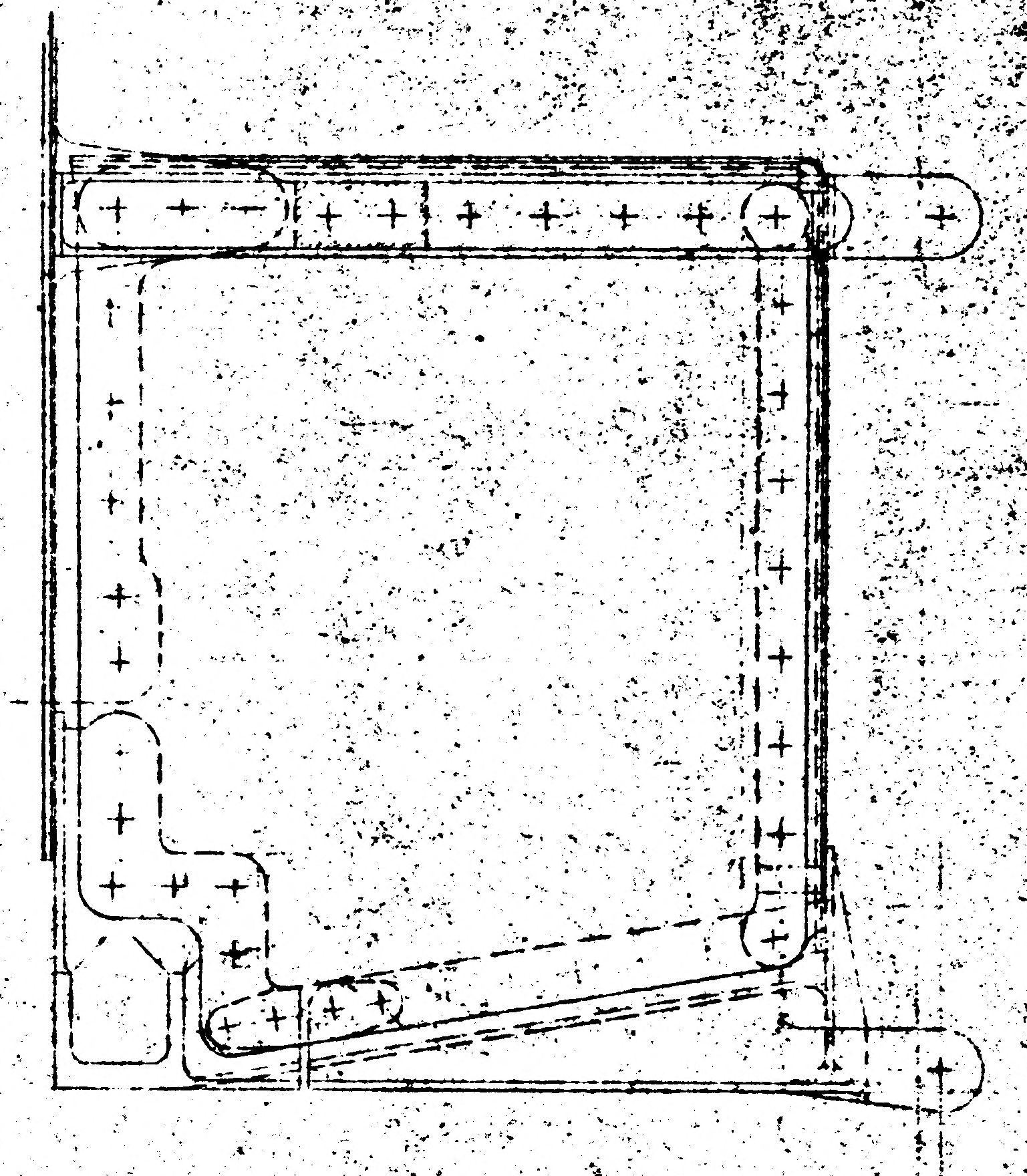

NOTES
1. ALL INFORMATION NOT REQ'D FOR INSTALLATION OF LDW280-52636 IS FOR REFERENCE ONLY.
2. FOR LAYOUT RELEASE ONLY. TO BE REDRAWN ON PRODUCTION FORMAT.

MANUFACTURING OPERATIONS
UNLESS OTHERWISE SPECIFIED
NOTES CHECKED √ APPLY TO THIS DWG.

RUBBER STAMP PART NUMBER AND ALL OTHER MARKINGS IN REGION MARKED ▭ USE BOTH SIDES IF NECESSARY.	/
FILLET AND INSIDE CORNER RADII TOLERANCES .016R TO .062R ± .010 .063R TO .250R ± .015 OVER .250R ± .030	
DEPTH SHOWN FOR TAPPED HOLES IS FULL THDS. 2-3 IMP THDS. BEYOND PERMISSIBLE.	
EXTERNAL THREAD LENGTH SHOWN INCLUDES 2 IMPERFECT THREADS MAX.	
DO NOT CADMIUM PLATE & PAINT HOLES OR SURFACES MARKED WITH DOUBLE ASTERISK.	
MISMATCH STEP OF ± .005 PERMISSIBLE DUE TO CHANGE OF CUTTERS AT INSIDE INTERSECTING SURFACES.	
DIAMETERS MARKED MUST BE CONCENTRIC WITHIN FULL INDICATOR READING	
HOLES MUST BE KEPT FREE OF CHROME PLATING SOLUTION.	
ALL DIMENSIONS SHOWN TO BE MET AFTER CADMIUM PLATING. THICKNESS OF PLATE .0003 MIN. TO .0005 MAX. MIN. THICKNESS TO BE .0002 ON THREADED AREAS. NO ALLOWANCE FOR PLATING IN HOLES	
125 √ SURFACE ROUGHNESS INCLUDING REAMED HOLES PER MIL-STD-10	
200 √ FOR ALL DRILLED HOLES	
REMOVE ALL BURRS. BREAK ALL EDGES .015-.031	
INSPECTION INFORMATION MINIMUM PERMISSIBLE AVERAGE EDGE DISTANCE MARKED IS	
SYMBOL f DENOTES SURFACE TO BE MACHINED	
UNLESS OTHERWISE SPECIFIED TOLERANCE ON FLANGES IS ± 1/32	
LENGTHS OF AN, NAS & MS AL ALY RIVETS SHORTER THAN 1 INCH ARE NOT SPECIFIED.	
TOLERANCE ON LOFTED DELINEATIONS IS	

DWG SIZE 34 X

LDW280-52636

02/02 NAS 9-1100

	GRUMMAN AIRCRAFT ENGRG CORP., BETHPAGE, L. I., NEW YORK			
LEM	SIZE J	CODE IDENT NO. 26512	LDW280-52636	
MODEL OR END ITEM	SCALE FULL		SHEET	

THIS IS AN ORIGINAL DRAWING.

LDW280-52648B

MODEL OR END ITEM	NEXT ASSY	MODULE OR SER NO.	REQD PER MODULE OR END ITEM
LM	LDW280-53553	LM-3(33)	1
LM	LDW280-52533	LM-2 (32)	1

PART NO. LDW280-52648-1

GAEC SCH NO. 52-1

MODEL OR END ITEM	NEXT ASSY	MODULE OR SER NO.	REQD PER MODULE OR END ITEM

PART NO.

GAEC SCH NO. 52-1

MODEL OR END ITEM	NEXT ASSY	MODULE OR SER NO.	REQD PER MODULE OR END ITEM

PART NO

GAEC SCH NO. 521

(5)

SH REV STATUS: FOR DESCRIPTION OF REV SEE SUBQ SH

SHEET	1.00	1.10	1.11	2.00	2.01			3.00	
REV	B	B	B	B.	B			B	
SHEET									
REV									
SHEET									
REV									

LAST SECT LTR USED H

LAST DASH NO. USED -7

GRUMMAN REL INFO B

PRIM NO. 207

JK(001) MP-16B-4/12/68

UNLESS OTHERWISE SPECIFIED DIMENSIONS ARE IN INCHES.

TOLERANCE UNLESS SPECIFIED FRACTIONS - DECIMALS — ANGLES ±1/32 ±.020 ±1/2°

ORIG DWG AUTH

DETAIL SPEC REQUIREMENT

CLASS II ENGRG CHANGE

CLASS I ENGRG CHANGE

CONTRACT NO. NAS 9-1100

LINE ITEM # 1

DOCUMENTATION TYPE II

DRAWN BY	J.GARRAFFO 12/9/66	MATLS	12/13/66
LAYOUT BY	MARZELLA	THERMO	12/13/66
CHECKED BY	J.S. 12-10-66		
GRP LDR	12/12/66		
V.D.I.	12/13/66		
STRUCTURES	12/13/66	PROJ ENGR	12-13
STRUCTURES	12/13	REL GROUP	12-13-66
WEIGHTS			

GRUMMAN AIRCRAFT ENGRG CORP
BETHPAGE, L. I., NEW YORK

DOOR INSTL
DESCENT STAGE QUAD II SEQ ACCESS

SIZE B

CODE IDENT NO. 26512

LDW280-52648 B

SCALE NONE

SHEET 1.00 OF 6

CDR = 12/7/66

12-66

01

NAS 9-1100

REVISIONS FOR CONTINUATION OF REVISIONS SEE SHEET 1.11

CHANGE LTR	ITEM NO.	SHEET NO.	ZONE	GRUMMAN INFO ONLY	DET SPEC	CLASS I	CLASS II	ENGRG ORDER	DESCRIPTION	EFFECTIVITY	DISPOSITION OF EXISTING PARTS		CHANGED BY AND DATE	ENGRG APPD	GOVT APPD
											REWORK	SCRAP			
A	1	1.00, 1.10, 2.00, 2.01 3.00	10D 4A 4C					EO A1	ADDED SH 1.10, ON-3 RELOCATED LDW280M17698-11. ADDED LDW280P17946-11, LDW280P17967-85, LDW280M17698-11, MS51957-16, AN960C416L & GS20D-06-14 (5 EA.) ADDED NOTES 8 & 9. & VIEW H-H REMOVED ALL QTY. OF LDW280P17946-11, LDW280M17698-11 & LDW280-52767-1 FROM -1 & ADDED TO -3. REMOVED GW10H-3 & GR11B-1 (11 EA) FROM -7 & -5 & ADDED TO -3 & -1. ADDED -9 & -11 EFF LM-3, ADDED -13 & -15 EFF LM4 THRU -15. REMOVED LM-3 THRU LM-15 FROM -1.	LM-2 THRU LM-15 DF	✓		3-27-67 A. SCHMADTKE		
B	1	3.00 1.10 2.01 2.02 1.00	2B THRU 10D				✓	EO B1	ON-1 IN FLD & BM OF DWG #LDW280P17967 -157, -161, -163, -165, -167, -169, -171, -173 -175 -177 -179 -181 -183 & -185 WAS -117 -121 -123 -125 -127 -129 -131 -133 -135 -137 -119 -61 -115 & -85 RESPECTIVELY IN B/M MS20470A4 WAS MS20470A3	LM-2 (32) THRU LM-15 (45)	✓		A. LITVINOFF 4-11-68		
	2	1.10 1.00 3.00, 2.00					✓	EO B2	REF EO B1: ON-3 WAS ON-1						
	3	1.10, 1.00 3.00, 2.00					✓	EO B3.	REF EO B2: ON-3, -11 & -15 WAS ON-3						
	4	3.00 1.10 2.01	4D				✓	EO B4	ON-1 IN FLD & B/M ADDED AN960D4L WASHERS TO MS20470 A4 RIVETS. EXPANDED VIEW *-* (REF EO-A1) TO INCLUDE INSTL OF LDW280P17967-185. WITH MS20470A4 & AN960D4L (6EA)						
	5	1.00. 1.10					✓	EO B5	REF EO B4 -9 INSTL FOR LM-3 (33) & -13 INSTL FOR LM-4 (34) THRU LM-15 (45) WAS -1, NSTL. LM-2 32 THRU LM-15 (45)						
	6	1.10 3.00 2.00 2.01 1.00	10D				✓	EO B6	ON-1 IN FLD & B/M ADDED AN960C6L (16) REVISED CALLOUT "SHIM AS REQD .128 MAX. SEE NOTE 9": WAS SHIM .120 MAX ADDED NOTE #9 SHIM A/R USING ANY COMBINATION OF AN960 C416 WASHERS. LDW280P17946-11 (16) WAS LDW280P17946-1 (16) REMOVED AN960C416L WASHERS FROM B/M						
	7	1.10 1.00					✓	EO B7	REF EO B6: ON-3, -11 & -15 IN FLD & B/M: WAS ON-1 IN FLD & BM		NOT	REQD	H.D.		

CHG APPROVED

LTR	GROUP LDR	VEH. DES. INT.	STRUCTURES	STRUCTURES	WEIGHTS	MATERIALS	THERMO
A	—	J. Puntin 7/25					
B							

GRUMMAN AIRCRAFT ENGRG CORP., BETHPAGE, L. I., NEW YORK

SIZE	CODE IDENT NO.		
B	26512	LDW280-52648	B

SCALE NONE SHEET 1.10

ENG 77.16 3-66

01

NAS 9-1100

REVISIONS FOR CONTINUATION OF REVISIONS SEE SHEET

CHANGE LTR	ITEM NO.	SHEET NO.	ZONE	GRUMMAN INFO ONLY	DET SPEC	CLASS I	CLASS II	ENGRG ORDER	DESCRIPTION	EFFECTIVITY	DISPOSITION OF EXISTING PARTS REWORK	DISPOSITION OF EXISTING PARTS SCRAP	CHANGED BY AND DATE	ENGRG APPD	~~CUST~~ APPD
B	8	1.10 3.00 1.00 2.00 2.02 4.00	AA	P		√		LE0280-784 LCD1433(CCA586)	ON-13 REMOVED LM-4(34) THRU LM 15(45) REQ MTS FOR N/A LDW280-54553. ADDED SH 1.11	LM-4 THRU LM-15(45)		-13	A. LITVINOFF 4-11-68		
	9	1.11, 1.00		G		√		EOB9 LCD24461 CCA788	REMOVED LM-3(33) FROM-9 & ADDED LM-3(33) TO-1	LM-3 (33)	✓				
	10	2.00, 3.00	8C	P		✓		EO B10 ~~LCD 2360~~	ON-9 INSTL, ADDED LDW280P18174-15 & GT835P-8	LM-3(33)	✓		H.D.		
	11	1.11		P (E)		✓		LCD 2360	REF EO B10: ON-9 INSTL SHOULD BE ON-1 H.D.	LM-3(33)	✓				

CHG APPROVED	LTR	GROUP LDR	VEH DES INT	STRUCTURES	STRUCTURES	WEIGHTS	MATERIALS	THERMO				
	B											

GRUMMAN AIRCRAFT ENGRG CORP., BETHPAGE, L. I., NEW YORK

SIZE	CODE IDENT NO.		
B	26512	LDW280-52648	B
SCALE NONE			SHEET 1.11

ENG 77.16 3-66

01

NAS 9-1100

-7	-5	-3	-1	PART NO.	I&T	CODE IDENT	NOMENCLATURE OR DESCRIPTION	MATERIAL	GOVT SPEC	COML SPEC	STOCK SIZE	PROCESS SYM	FINISH NO.	ZONE
1				LDW280P18174-3	E		BLANKET ASSY	SEE DWG						4B
	1			LDW280P18174-1			BLANKET ASSY							4B
		21		LDW280P17946-11			STANDOFF							9C
		21		LDW280M17698-11			WASHER							6B
		1		LDW280P17967-177			STRAP							6C
		1		-175										3C
		1		-173										3C
		1		-171										3B
		1		-169										4C
		1		-167										4B
		1		-165										5C
		1		-163										5B
		1		-161										5C
		3		-179										5B
		1		-157										6B
		1		-183										6A
		1		LDW280P17967-185			STRAP							10D
		1		LDW280P17967-181			STRAP							6C
			1	LDW280P18174-15			BLANKET ASSY							8C
		1		LDW280-52767-1			SHIELD							4C
				LDW280-52837-3			FRAME ASSY	SEE DWG						6A
		1		LDW280-52837-1			FRAME ASSY	SEE DWG						6A
		1		LDW280-52648-7			BLANKET ASSY					NONE	NONE	4A
		1		-5			BLANKET ASSY							4A
			1	-3			DOOR ASSY							4A
				LDW280-52648-1	E		DOOR INSTL					NONE	NONE	4A

QTY PER ASSEMBLY

SYM OR NO.	PROCESS SYM OR FINISH NO.	GRUMMAN SPEC OR MILITARY SPEC	SYM OR NO.	PROCESS SYM OR FINISH NO.	GRUMMAN SPEC OR MILITARY SPEC	SYM OR NO.	PROCESS SYM OR FINISH NO.	GRUMMAN SPEC OR MILITARY SPEC

I&T: IDENTIFICATION AND TRACEABILITY IN ACCORDANCE WITH NONE

GRUMMAN AIRCRAFT ENGRG CORP., BETHPAGE, L. I., NEW YORK

SIZE	CODE IDENT NO.		
B	26512	LDW280-52648	B
SCALE NONE		SHEET 2.00	

ENG 77.2 5-64

01

NAS 9-1100

				-7	-5	-3	-1	PART NO.	I&T	CODE IDENT	NOMENCLATURE OR DESCRIPTION	MATERIAL	GOVT SPEC	COML SPEC	STOCK SIZE	PROCESS SYM	FINISH NO.	ZONE
						16		MS51957-26	E		SCREW	STD PART						
						5		MS51957-16			SCREW							
							2	MS21043-08			NUT							
								MS20470AD4			RIVET							
								MS20470A4			RIVET							
								MS20426AD4			RIVET							
						16		AN960 C6L			WASHER							
						29		AN960 D4L			WASHER							
						AR		AN960C416			WASHER	STD PART						
						11	11	GW10H-3			RETAINER	GRUMMAN STD						
							AR	GT835P-8			TAPE							
							✓	GT835M-8			TAPE							
						✓		GT535G-HCS0200			STRAP							
						✓		GT535G-LCS0016			STRAP							
						21		GS20D-06-14			SCREW							
						11	11	GR11B-1			RETAINER							
							2	GB511J-08-3			BOLT							
									E		BUSHING	GRUMMAN STD						
							2	LDW280M17707-5	E		BUSHING	SEE DWG.						

QTY PER ASSEMBLY

SYM OR NO.	PROCESS SYM OR FINISH NO.	GRUMMAN SPEC OR MILITARY SPEC	SYM OR NO.	PROCESS SYM OR FINISH NO.	GRUMMAN SPEC OR MILITARY SPEC	SYM OR NO.	PROCESS SYM OR FINISH NO.	GRUMMAN SPEC OR MILITARY SPEC

I&T: IDENTIFICATION AND TRACEABILITY IN ACCORDANCE WITH NONE

GRUMMAN AIRCRAFT ENGRG CORP., BETHPAGE, L. I., NEW YORK

SIZE	CODE IDENT NO.		
B	26512	LDW280-52648	B ②

SCALE NONE SHEET 2.01

ENG 77.2 5-64

01

NAS 9-1100

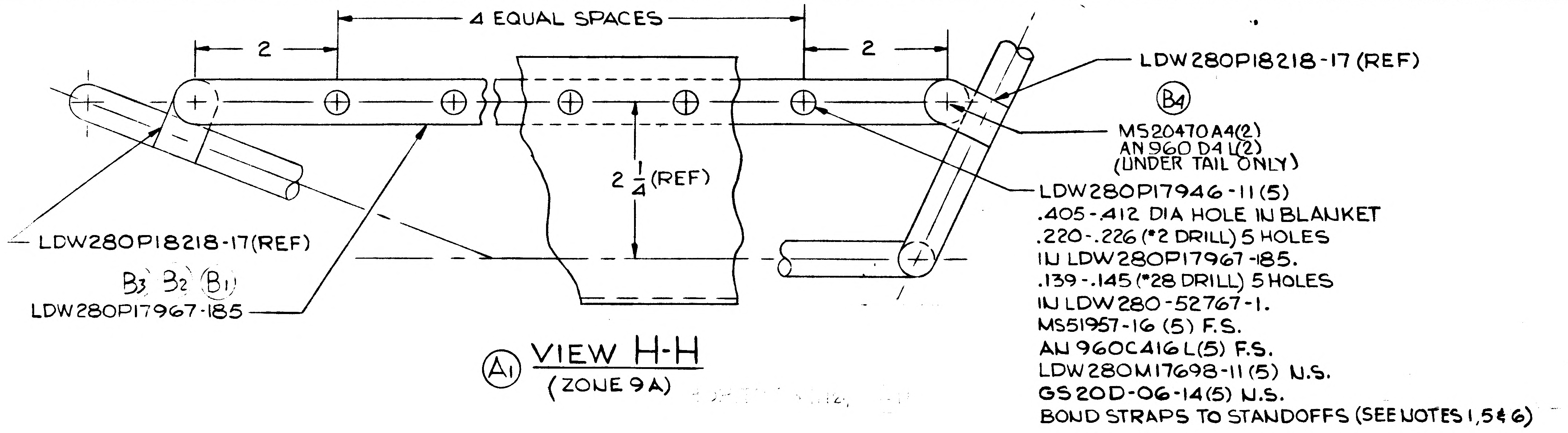

2
4 EQUAL SPACES
2
2 1/4 (REF)
LDW280P18218-17(REF)
B4
MS20470A4(2)
AN960 D4 L(2)
(UNDER TAIL ONLY)
LDW280P17946-11(5)
.405-.412 DIA HOLE IN BLANKET
.220-.226 (*2 DRILL) 5 HOLES
IN LDW280P17967-185.
.139-.145 (*28 DRILL) 5 HOLES
IN LDW280-52767-1.
MS51957-16 (5) F.S.
AN 960C416L(5) F.S.
LDW280M17698-11(5) N.S.
GS20D-06-14(5) N.S.
BOND STRAPS TO STANDOFFS (SEE NOTES 1,5 & 6)
LDW280P18218-17(REF)
B3 B2 B1
LDW280P17967-185

A1 VIEW H-H
(ZONE 9A)

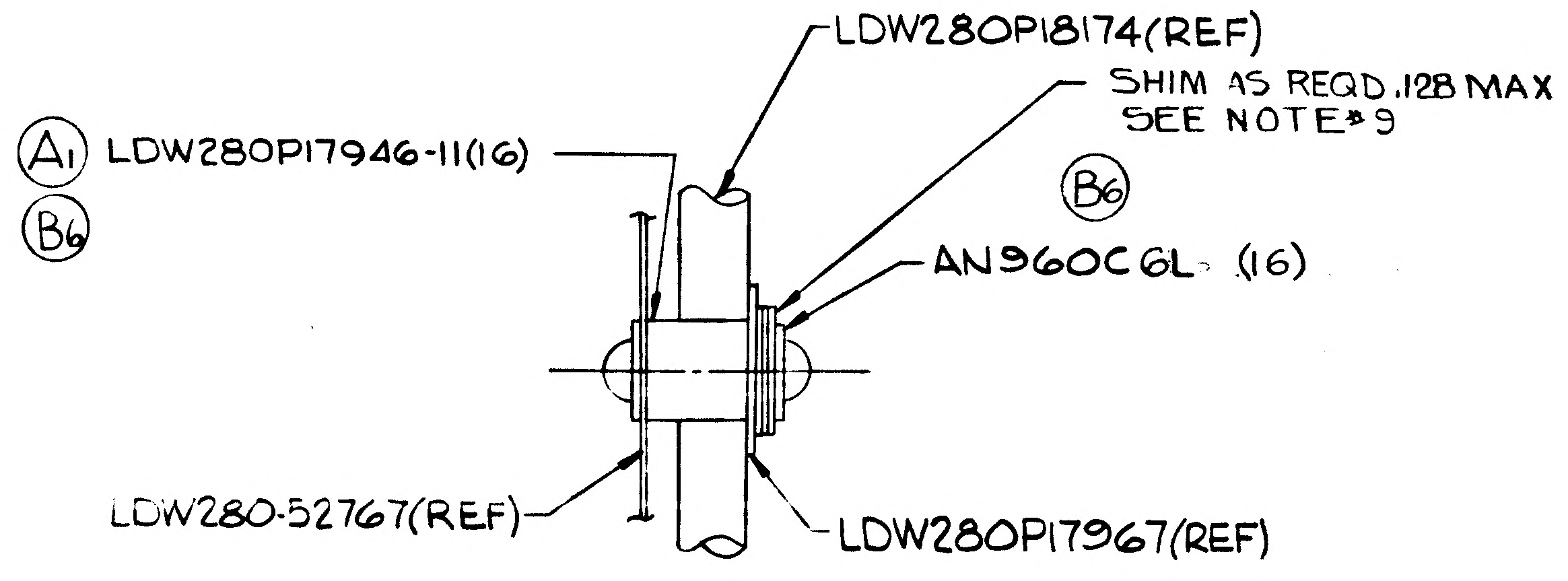

LDW280P18174(REF)
SHIM AS REQD .128 MAX
SEE NOTE *9
A1 LDW280P17946-11(16)
B6
B6
AN960C6L (16)
LDW280-52767(REF)
LDW280P17967(REF)

SECTION D-D (TYP)
ZONE 4C

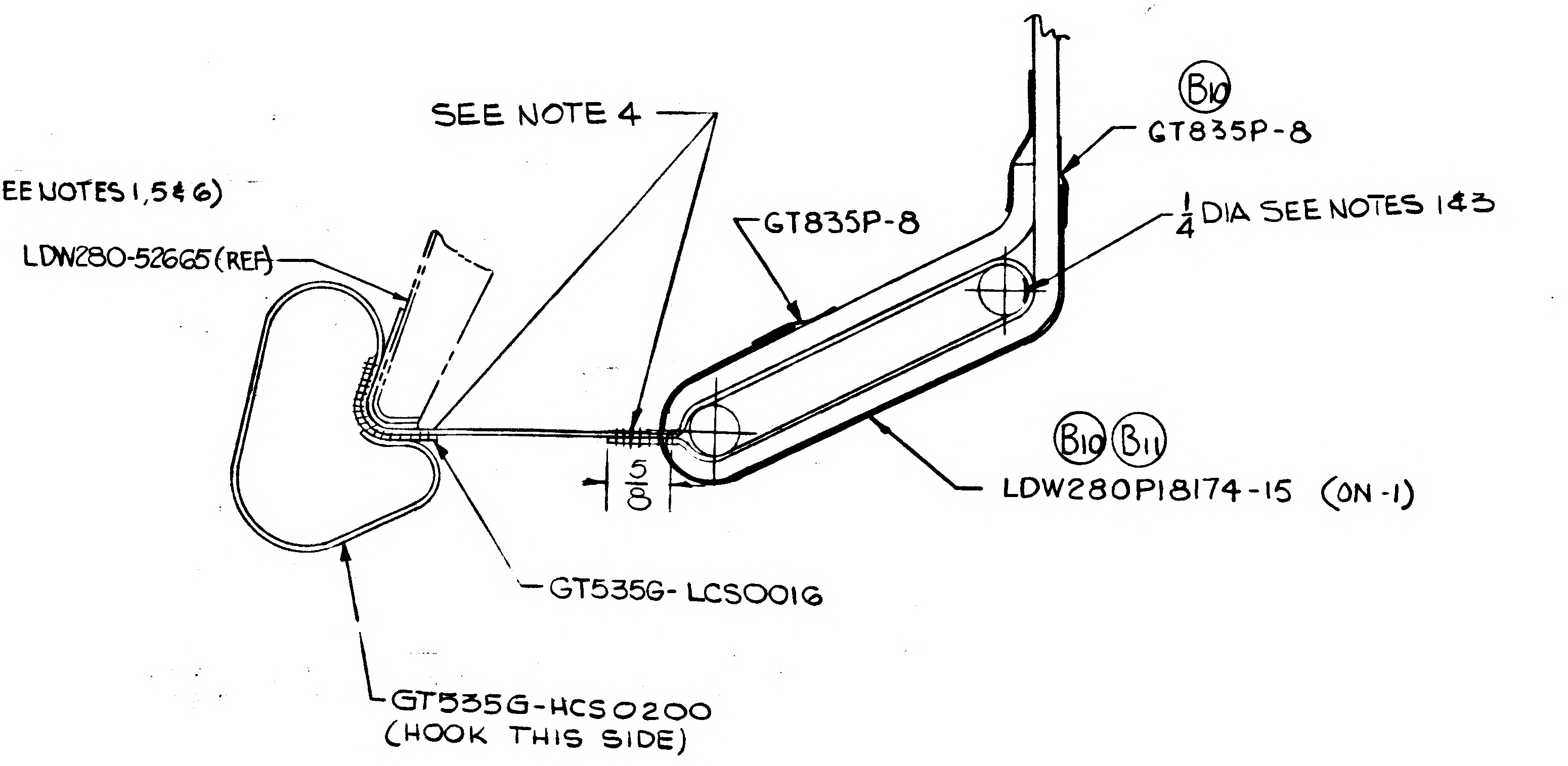

SEE NOTE 4
B10
GT835P-8
GT835P-8
1/4 DIA SEE NOTES 1 & 3
LDW280-52665(REF)
5/8
B10 B11
LDW280P18174-15 (ON-1)
GT535G-LCS0016
GT535G-HCS0200
(HOOK THIS SIDE)

SECTION E-E (ZONE 3A & 6A)
(TYP 2 PLACES)

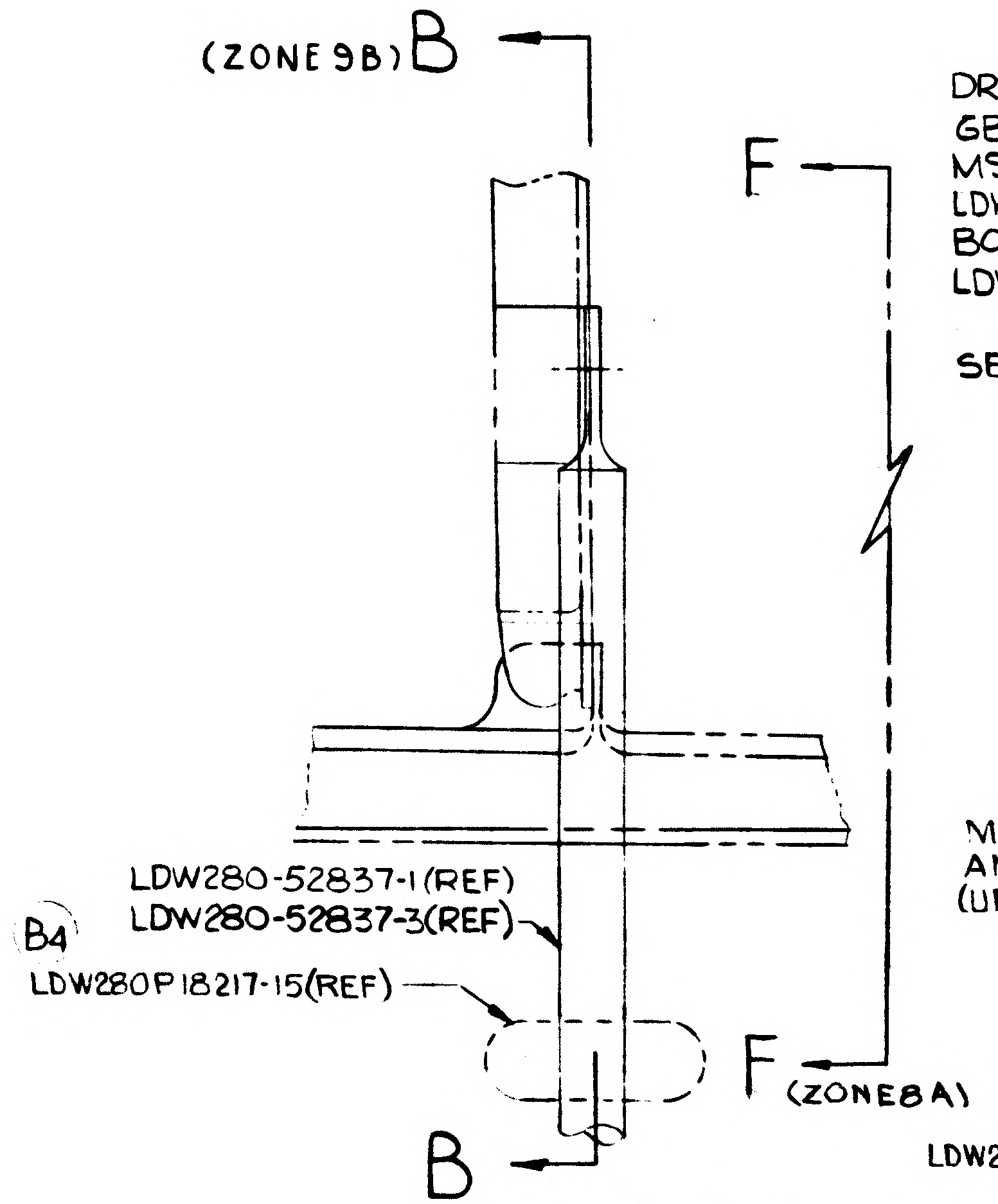

(ZONE 9B) B
F
LDW280-52837-1(REF)
LDW280-52837-3(REF)
B4
LDW280P18217-15(REF)
F (ZONE 8A)
B

VIEW A-A (ZONE 6D)

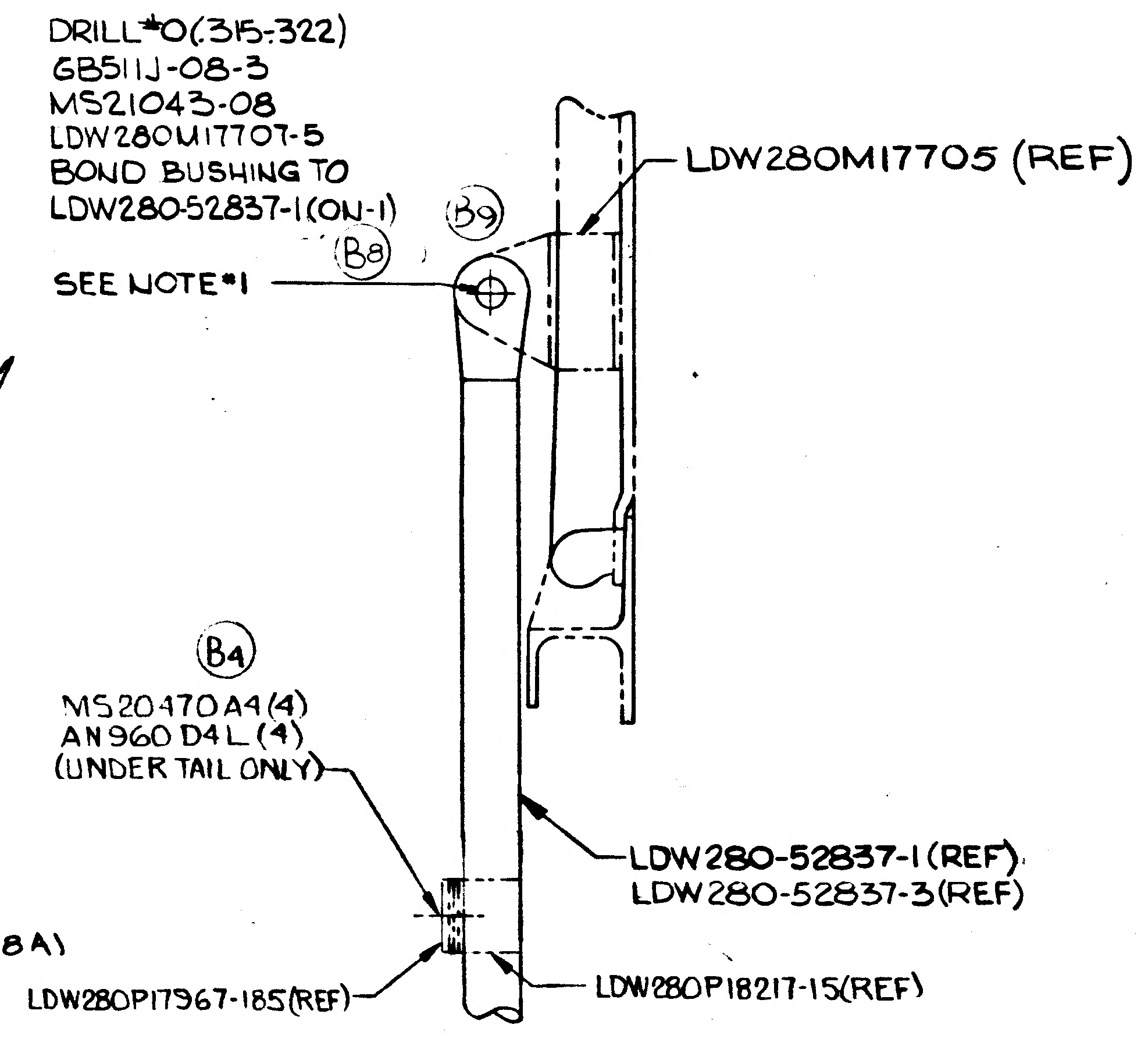

DRILL *O(.315-.322)
GB511J-08-3
MS21043-08
LDW280M17707-5
BOND BUSHING TO
LDW280-52837-1(ON-1)
B9
B8
SEE NOTE *1
LDW280M17705 (REF)
B4
MS20470A4(4)
AN960 D4L (4)
(UNDER TAIL ONLY)
LDW280-52837-1(REF)
LDW280-52837-3(REF)
LDW280P17967-185(REF)
LDW280P18217-15(REF)

VIEW B-B (SHOWN) ZONE 10A

VIEW G-G (OPP) ZONE 8A

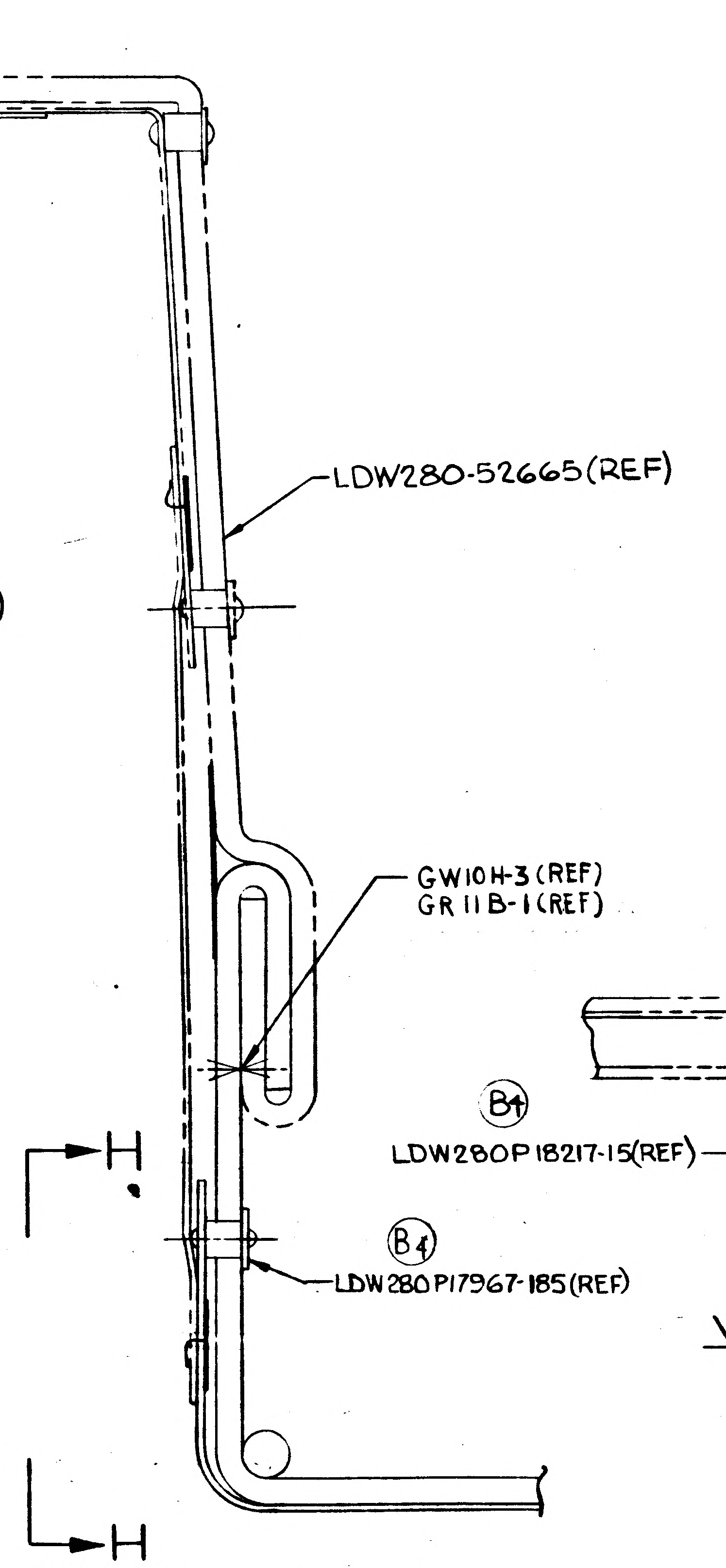

LDW280-52665(REF)
GW10H-3(REF)
GR11B-1(REF)
H
B4
LDW280P17967-185(REF)
H
(ZONE 10D)

VIEW F-F (ZONE 10B)

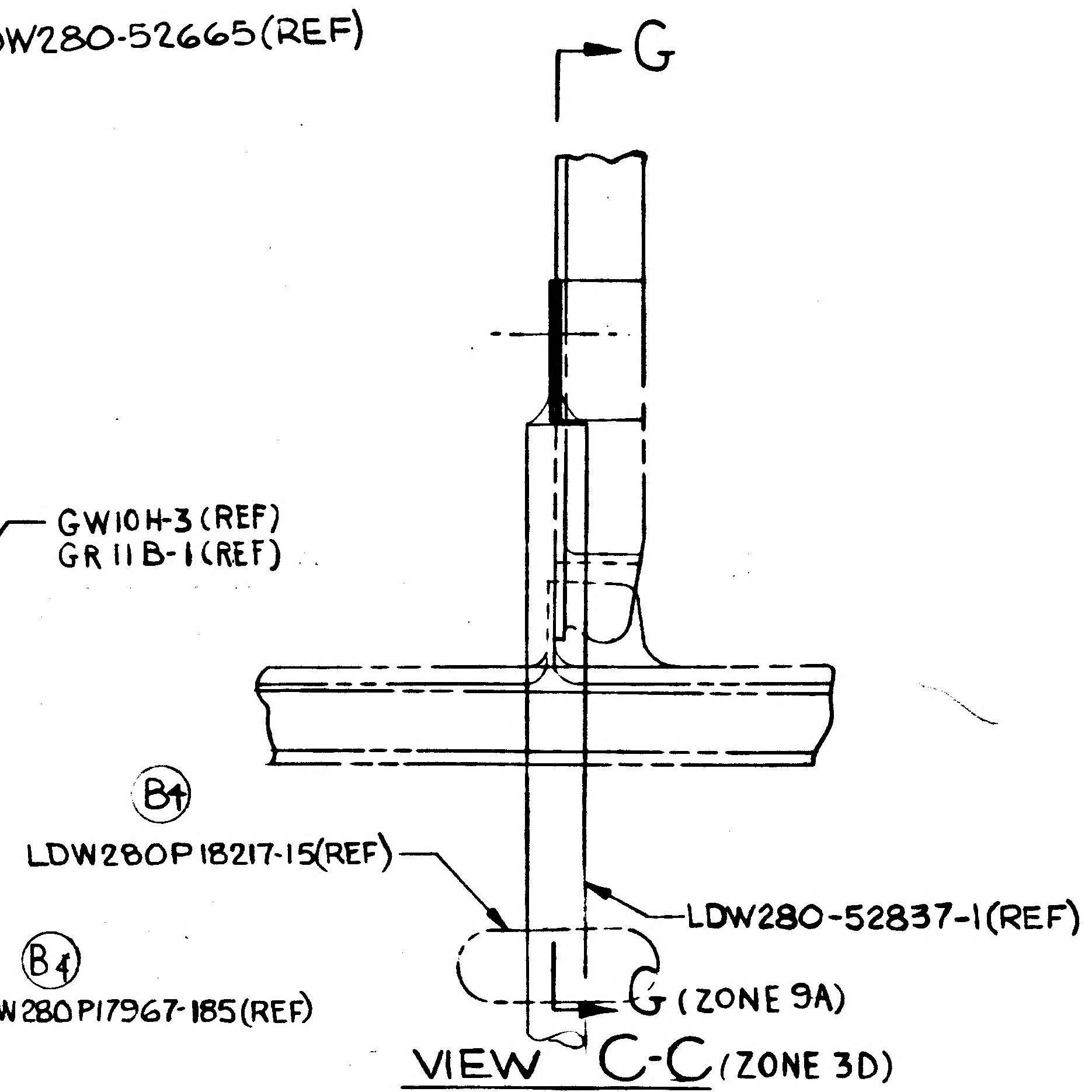

G
B4
LDW280P18217-15(REF)
LDW280-52837-1(REF)
G (ZONE 9A)

VIEW C-C (ZONE 3D)

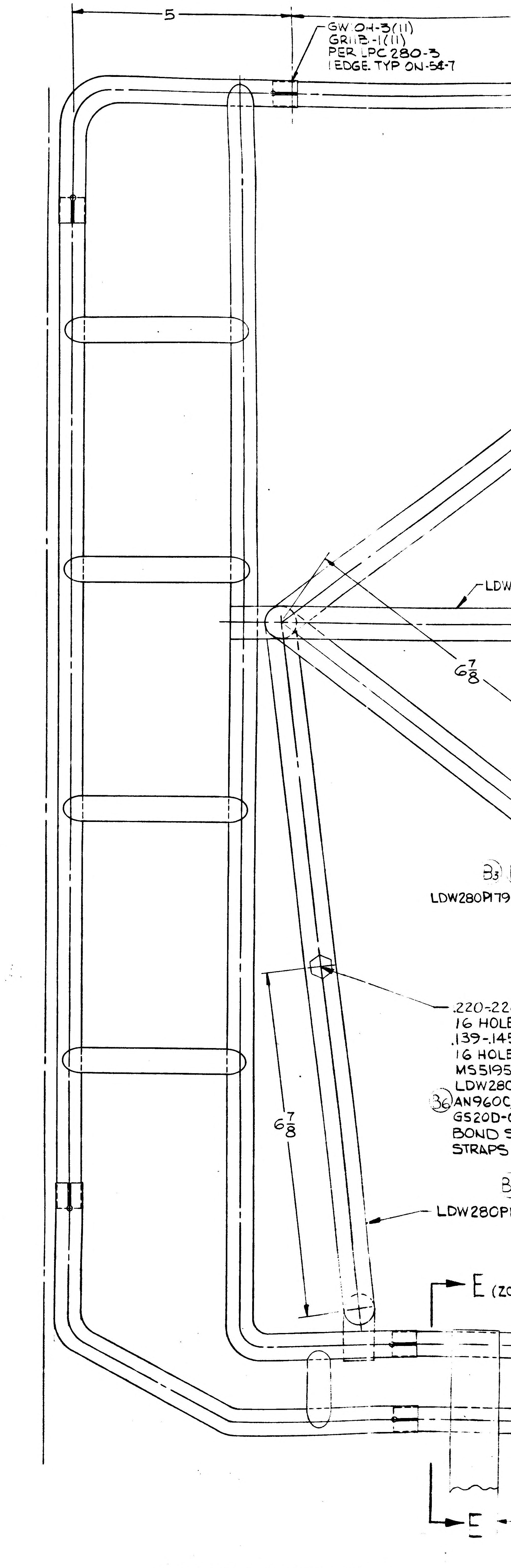

5
GW 0H-3(11)
GR11B-1(11)
PER LPC 280-3
I EDGE. TYP ON-54-7
LDW
6 7/8
B3
LDW280P179
.220-.22
16 HOLE
.139-.14
16 HOLE
MS5195
LDW280
B6 AN960C
GS20D-
BOND S
STRAPS
B
LDW280P
6 7/8
E (ZO
E

01/03 NAS 9-1100

LDW280-52648 SH 3

6
5
4
3
50 (10 EQUAL SPACES)
GM10H-3(4)
G211B-1(4)
PER LPC 280-3
EDGE TYP ON-54-7
A
A (ZONE 10A)
C
C (ZONE 8A)
8¼
5
5
B5 MS20470A4 (23)
AN 960 D4 L (23)
UNDER TAIL ONLY
5/16 (TYP)
VENT PER LPC280-2
6 PLACES (SEE NOTE 7)
-3 (REF)
2¼
7½
B3 B2 B1
LDW280P17967-181
B3 B2 B1
LDW280P17967-179
B3 B2 B1
LDW280P17967-179
B3 B2 B1
LDW280P17967-169
1½
1½
B3 B2 B1
LDW280P17967-173
B3 B2 B1
LDW280P17967-177
B3 B2 B1
LDW280P17967-161
D
D (ZONE 9C)
3 TRUE
B3 B2 B1
LDW280P17967-175
6⅞
B3 B2 B1
LDW280P17967-165
3⅝ TRUE
LDW280-52767-1 (ON-34-15)
LDW280P18174-3
LDW280P18174-1
B9 A1
8 3/16
B3 B2 B1
LDW280P17967-157
B3 B2 B1
LDW280P17967-179
B3 B2 B1
LDW280P17967-163
6 15/16 TRUE
1½
B3 B2 B1
LDW280P17967-171
.220-.226 (#2 DRILL)
16 HOLES IN LDW280P17967
.139-.145 (#28 DRILL)
16 HOLES IN LDW280-52767-1
MS51957-26 (16) FS
LDW28CM17698-11 (16) NS
B6 AN960C416 (FS)
GS20D-06-14 (16) NS
BOND STANDOFF TO
STRAPS SEE NOTE 1,546
A1
6⅞
5⅛ TRUE
A1
2¾
B3 B2 B1
LDW280P17967-167
5⅜
B3 B2 B1
LDW280P17967-183
3
E (ZONE 8C
E (ZONE 8C)
B9
LDW280-52837-1 (ON-3)
LDW280-52837-3 (ON-15)
E
18 17/32
LDW280-52648-1 INSTL
-3 ASSY
-5 ASSY
B9 -7 ASSY
A1 B9
17¾
E
LDW280-52648 SH 3
LDW280-52648 SHEET 3
6
4
3

02/03

NAS 9-1100

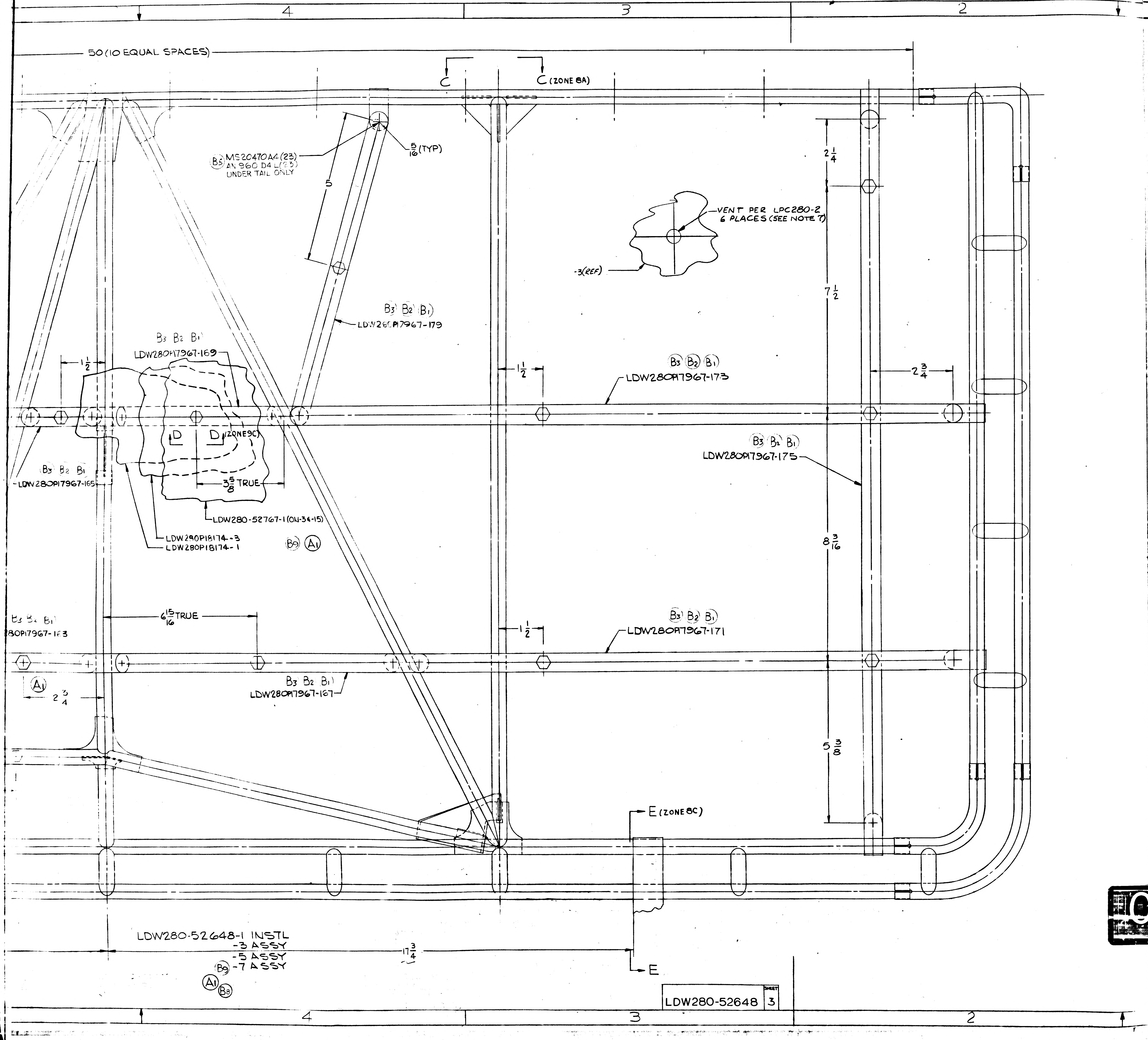
4
3
2
50 (10 EQUAL SPACES)
C
C (ZONE 8A)
B5 MS20470A4(23)
AN 960 D4 L(23)
UNDER TAIL ONLY
5/16 (TYP)
5
2 1/4
VENT PER LPC280-2
6 PLACES (SEE NOTE 7)
-3(REF)
B3 B2 B1
LDW280P17967-179
7 1/2
B3 B2 B1
LDW280P17967-169
1 1/2
B3 B2 B1
LDW280P17967-173
1 1/2
2 3/4
D
D (ZONE 9C)
B3 B2 B1
LDW280P17967-175
B3 B2 B1
LDW280P17967-165
3 5/8 TRUE
LDW280-52767-1 (ON-34-15)
LDW280P18174-3
LDW280P18174-1
B9 A1
8 3/16
B3 B2 B1
80P17967-183
6 15/16 TRUE
B3 B2 B1
LDW280P17967-171
1 1/2
A1
2 3/4
B3 B2 B1
LDW280P17967-167
5 3/8
E (ZONE 8C)
LDW280-52648-1 INSTL
-3 ASSY
-5 ASSY
B9 -7 ASSY
A1 B8
17 3/4
E
4
3
2

NOTES

1. BOND PARTS OF -1 & -3 WITH EPON 934 PER LSP14-22500 CURE RANGE I.
2. FINISHED ASSY & INSTL SHALL BE SMOOTH TO THE TOUCH, NO SHARP EDGES OR BURRS.
3. BOND GT535G-HC50200 TO LDW280-52837
4. THREAD TO BE SAGE GREEN SIZE E SPEC MIL-T-7807 TYPE II, CLASS I, NYLON THREAD. MAY BE PURCHASED FROM THREADS INC, GASTONIA, NORTH CAROLINA CODE IDENT 19937. SEW TAPE GT535G-AT 3/16 ± 1/16 FROM EDGE OF TAPE IN ACCORDANCE WITH FEDERAL STANDARD #751 a & STITCH TAPE 301
5. LOCATIONS FOR LDW280P181741 ARE TO BE EXPANDED 5% FOR -5 ASSY
6. LOCATIONS FOR LDW280P181743 ARE TO BE EXPANDED 7% FOR -7 ASSY
7. VENT HOLE LOCATIONS PER APPROVED MASTER TEMPLATE.
8. WRAP ALL SURFACES OF STRAPS & FRAME WITH GT835M-8 TAPE.
9. SHIM AS REQD USING ANY COMBINATION OF AN960C416 WASHERS

MANUFACTURING OPERATIONS UNLESS OTHERWISE SPECIFIED NOTES CHECKED ✓ APPLY TO THIS DWG.	
PART NUMBER AND ALL OTHER MARKINGS IN REGION MARKED ▭ USE BOTH SIDES IF NECESSARY.	
FILLET AND INSIDE CORNER RADII TOLERANCES .016R TO .062R ± .010 .063R TO .250R ± .015 OVER .250R ± .030	
DEPTH SHOWN FOR TAPPED HOLES IS FULL THDS. 2-3 IMP THDS. BEYOND PERMISSIBLE.	
EXTERNAL THREAD LENGTH SHOWN INCLUDES 2 IMPERFECT THREADS MAX.	
DO NOT CADMIUM PLATE & PAINT HOLES OR SURFACES MARKED WITH DOUBLE ASTERISK.	
MISMATCH STEP OF ± .005 PERMISSIBLE DUE TO CHANGE OF CUTTERS AT INSIDE INTERSECTING SURFACES.	
DIAMETERS MARKED MUST BE CONCENTRIC WITHIN FULL INDICATOR READING	
HOLES MUST BE KEPT FREE OF CHROME PLATING SOLUTION.	
ALL DIMENSIONS SHOWN TO BE MET AFTER CADMIUM PLATING. THICKNESS OF PLATE .0003 MIN. TO .0005 MAX. MIN. THICKNESS TO BE .0002 ON THREADED AREAS. NO ALLOWANCE FOR PLATING IN HOLES	
125 SURFACE ROUGHNESS INCLUDING REAMED HOLES PER MIL-STD-10	
200 FOR ALL DRILLED HOLES	
REMOVE ALL BURRS. BREAK ALL EDGES .015-.031	
INSPECTION INFORMATION MINIMUM PERMISSIBLE AVERAGE EDGE DISTANCE MARKED IS	
SYMBOL √ DENOTES SURFACE TO BE MACHINED	
UNLESS OTHERWISE SPECIFIED TOLERANCE ON FLANGES IS ± 1/32	
LENGTHS OF AN, NAS & MS AL ALY RIVETS SHORTER THAN 1 INCH ARE NOT SPECIFIED.	
TOLERANCE ON LOFTED DELINEATIONS IS	

DWG SIZE 34 X 106

PRINTING INFO ONLY
FULL SIZE SHEET AREA (36 X 108) = 27 SQ. FT.
1/2 SIZE SHEET AREA (1/4 OF FULL) = 6.75 SQ. FT.

PRINT TRIM LINE

LDW280-52648B

LDW280-52648B

03/03

NAS 9-1100

LDW280-52648 SHEET 3

	GRUMMAN AIRCRAFT ENGRG CORP., BETHPAGE, L. I., NEW YORK			
LM	SIZE J	CODE IDENT NO. 26512	LDW280-52648	B
MODEL OR END ITEM	SCALE FULL		SHEET 3.00	

ENG 32.2 REV 3-65

B

GRUMMAN AIRCRAFT ENGINEERING CORP.
CODE IDENT NO. 26512
ENGINEERING ORDER

DWG NO.	LDW280-52648	EO NO.	A1
CONTROL INFO NO.	LDW280A5234		

ADD THE FOLLOWING IN FIELD OF DWG AND B/M.

1. ZONE 5C; STANDOFF SHN PER 3" DIM IS MOUNTED ON TUBE OF LDW280-52837 FRAME. RELOCATE TO FALL IN LDW280P-17967-123 STRAP AT 2¾ FROM TUBE AT ℄.

2.

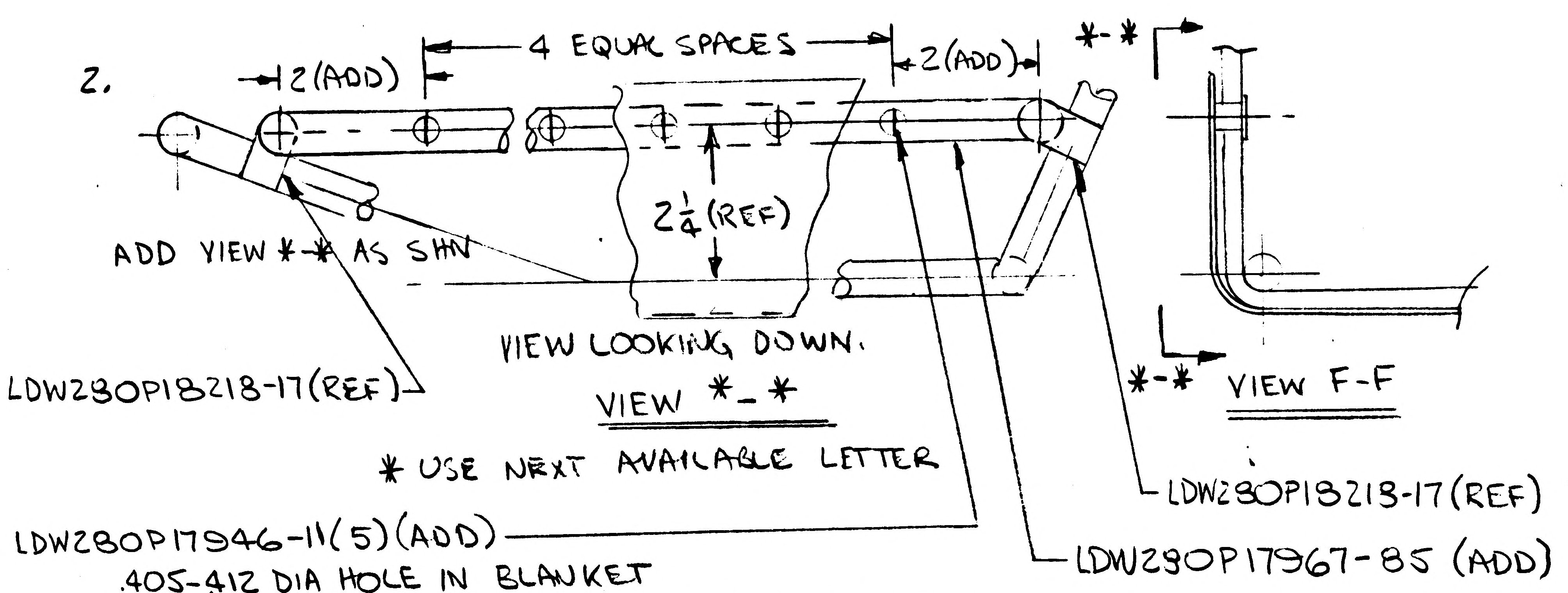

* USE NEXT AVAILABLE LETTER

LDW280P17946-11(5)(ADD)
.405-412 DIA HOLE IN BLANKET
#2 (.220-.226 DIA) 5 HOLES IN LDW280P17967-85 STRAP
#28 (.139-.145 DIA) 5 HOLES IN LDW280-52767-1 SHIELD
MS51957-16 (5), AN960C416L (5) FAR SIDE
LDW280M17698-11 (5), G520D-06-14 (5) NEAR SIDE
BOND STRAPS TO STANDOFFS SEE NOTE 1,5 & 6.

CORRECT B/M TO AGREE

3. IN FIELD OF DWG ADD NOTE # * (USING NEXT AVAILABLE NUMBER) "WRAP ALL SURFACES OF STRAPS AND FRAME WITH GT835M-8 TAPE."

4. IN B/M G520D-06-14 NUT SHOULD BE SCREW.

5. IN FIELD & B/M LDW280P17946-1 SHOULD BE LDW280P17946-11. IN B/M REMOVE LDW280P17946-11, LDW280M17698-11 & LDW280-52767-1 FROM -1 INSTL AND ADD TO -3 ASSY. IN FIELD ZONE 6B ADD LDW280-52767-1 IN NOTE FOR .139-.145 DIA HOLE.

6. REMOVE GW10H-3 & GR11B-1 FROM -7 & -5 ASSY AND ADD THEM TO -3 ASSY & -1 INSTL. (11 EACH)

7. ADD -11 ASSY AND -9 INSTL IDENTICAL TO -3 ASSY & -1 INSTL EXCEPT AS NOTED. ON-11 ASSY LDW280-52767-3(1) REPLACES LDW280-52767-1 (1). ON -9 INSTL -11 ASSY REPLACES -3 ASSY. -9 INSTL IS EFFECTIVE FOR LM-3(33) ONLY AND NEXT ASSY IS LDW280-53553. 1 REQ'D/MOD

8. ADD -15 ASSY AND -13 INSTL IDENTICAL TO -3 ASSY & -1 INSTL EXCEPT AS NOTED. ON -15 ASSY LDW280-52837-3(1) REPLACES LDW280-52837-1 (1). ON -13 INSTL -15 ASSY REPLACES -3 ASSY. -13 INSTL IS EFFECTIVE FOR LM-4 (34) THRU LM-15(45) AND NEXT ASSY IS LDW280-54553. 1 REQ'D/MOD

9. REMOVE LM-3(33) THRU LM-15(45) REQM'TS FROM -1 INSTL. (2)

*: -9, -11, -13 & -15 MAY BE MADE BY REWORKING -1 & -3

DETAIL SPEC REQ		CL II ENGRG CHG		CL I ENGRG CHG	

REASON FOR EO
DWG CORRECTIONS (RTE-204)
ADDITION OF RTG SHIELD (CCA 359)
ADDITION OF DOOR ASSY FOR ACTUATION

DESCRIPTION OF E.O. ON-3, RELOCATED LDW280M17698-11. ADDED LDW280P17946-11, LDW280P17967-85, LDW280M17698-11, MS51957-16, AN960C416L, & G520D-06-14, 5EA. ADDED NOTE *. REMOVED ALL QTY. OF LDW280P17946-11, LDW280M17698-11, AND LDW280-52767-1 FROM -1 & ADDED TO -3. REMOVED GW10H-3 & GR11B-1 11 EA FROM -7 & -5 & ADDED TO -3 & -1. ADDED -9 & -11 EFF LM-3, ADDED -13 & -15 EFF LM-4 THRU -15. REMOVED LM3 THRU LM15 FROM -1.

(R) TS

GAEC EO RELEASE: VE 1/31/7

MODEL	EFFECTIVITY: PROCURING ACTIVITY NO.	GAEC UNIT NO.	SUB CONTR UNIT NO.
LM	LM-2(32)	Thru LM15(45)	

DRAWING CHANGE REQD: REVISE DWG	RECORD EO	DISPOSITION OF PARTS: REWORK	SCRAP
✓		✓	

APPROVED BY								
DATE 1/27/67				1/27/67	1/27/67		1/27/67	1-30-67
5	VD1	SUPPORT	RELIAB. GROUP	GROUP LEADER	STRESS GROUP	LIAISON ENGRG	PROJ ENGRG	~~GOVT~~

PRIORITY	DRAWING TITLE	DRAWING NO.	EO NO.
C	DOOR INSTL DESCENT STAGE QUAD II ACCESS	LDW280-52648	A1

ISSUED BY MARZELLA / [illegible] SECTION VEHICLE DESIGN GROUP NO. 335 PL 35

01 NAS 9-1100

ENG 32.1 REV 3-65

GRUMMAN AIRCRAFT ENGINEERING CORP.
CODE IDENT NO. 26512

ENGINEERING ORDER

*

DWG. NO. LDW280-52648 | EO NO. B1

CONTROL INFO NO. LM-5-15219

DESCRIPTION OF E.O. ON-1
IN FLD & BM OF DWG.# LDW280P17967
-157, -161, -163, -165, -167, -169, -171, -173, -175, -177, -179, -181, -183 & -185 WAS
-117, -121, -123, -125, -127, -129, -131, -133, -135, -137, -119, -61, -115 & -85 RESPECTIVELY.
IN BM MS20470A4 (WAS) MS20470A3.

RELEASED BY LIAISON

DETAIL SPEC REQ		CL II ENGRG CHG	✓	CL I ENGRG CHG	

REASON FOR EO: DR.#19 HOLE TOO LARGE FOR A4 RIVETS.

DESCRIPTION OF EO: NOTED ABOVE.

GAEC EO RELEASE: C — JL

MODEL	EFFECTIVITY: PROCURING ACTIVITY NO.	GAEC UNIT NO.	SUB CONTR UNIT NO.
LM		LM-2 (32)	
		THRU	
		LM-15 (45)	

DRAWING CHANGE REQD: REVISE DWG	RECORD EO	DISPOSITION OF PARTS: REWORK	SCRAP								
✓		✓		APPROVED BY	JaP			~	JFJ	JFJ	WB
				DATE	7/6/67			~	6-2-67	6-2-67	7/6/67
				-1-	V&I	SUPPORT	RELIAB. GROUP	GROUP LEADER	STRESS GROUP	LIAISON ENGRG	PROJ ENGRG

6-3-67

PRIORITY: C

DRAWING TITLE: DOOR INSTL - DESCENT STAGE QUAD II SEQ ACCESS

DRAWING NO.: LDW280-52648 | EO NO.: B1

ISSUED BY: LIAISON G.DIEHL JK. SECTION: V.D.I GROUP NO. 335 PL 5

01

NAS 9-1100

ENG 32.1 REV 3-65

B

GRUMMAN AIRCRAFT ENGINEERING CORP.
CODE IDENT NO. 26512
ENGINEERING ORDER

*

DWG. NO. LDW280-52648
EO NO. B2
CONTROL INFO NO. LM-5-15338

THIS IS A REVISION OF EOB1

CHANGE CALLOUT ON-1 S/B ON-3

RELEASED BY LIAISON

DETAIL SPEC REQ		CL II ENGRG CHG	✓	CL I ENGRG CHG	

REASON FOR EO
PARTS INSTALLED ON -3 ASSY
RTE 05131-241

DESCRIPTION OF EO
REF EOB1
ON-3 WAS ON-1

GAEC EO RELEASE C
JL

MODEL	PROCURING ACTIVITY NO.	GAEC UNIT NO.	SUB CONTR UNIT NO.
LM		LM-2 (32)	
		THRU	
		LM-15 (45)	

DRAWING CHANGE REQD		DISPOSITION OF PARTS	
✓		✓	
REVISE DWG	RECORD EO	REWORK	SCRAP

APPROVED BY	Jal			~	JF	CH		
DATE	7/6/67			~	6-13-67	6-12-67	7/6/67	6/13/67
1	VDI	SUPPORT	RELIAB. GROUP	GROUP LEADER	STRESS GROUP	LIAISON ENGRG	PROJ ENGRG	~~GOVT~~

PRIORITY	DRAWING TITLE	DRAWING NO.	EO NO.
C	DOOR INSTL D/S~QUAD II~SEQ ACCESS	LDW280-52648	B2

ISSUED BY LIAISON C. HEDGES/ X86226 SECTION YDI GROUP NO. 335 PL 25

01 NAS 9-1100

ENG 32.1 REV 3-65

GRUMMAN AIRCRAFT ENGINEERING CORP.
CODE IDENT NO. 26512
ENGINEERING ORDER

DWG. NO. LDW280-52648
EO NO. B3
CONTROL INFO NO. LM-5-15489

THIS IS A REVISION OF EO B2

"CHANGE CALLOUT ON -1 S/B ON -3"

S/B

"CHANGE CALLOUT ON -1 S/B ON -3, -11 & -15"

RELEASED BY LIAISON

DETAIL SPEC REQ	☐	CL II ENGRG CHG	☑	CL I ENGRG CHG	☐

REASON FOR EO: PARTS INSTALLED ON -3, -11 & -15 ASSY'S

DESCRIPTION OF EO: (REF EO B2) ON -3, -11 & -15 WAS ON -3

GAEC EO RELEASE: C JL

MODEL	PROCURING ACTIVITY NO.	GAEC UNIT NO.	SUB CONTR UNIT NO.
LM		LM-2 (32)	
		THRU	
		LM-15 (45)	

DRAWING CHANGE REQD: REVISE DWG ✓ · RECORD EO
DISPOSITION OF PARTS: REWORK ✓ · SCRAP

APPROVED BY								
DATE	7/5/67				6-28	6-28-67	7/5/67	6/29/67
6-28-67	VDI	SUPPORT	RELIAB. GROUP	GROUP LEADER	STRESS GROUP	LIAISON ENGRG	PROJ ENGRG	~~CONT~~

PRIORITY: C
DRAWING TITLE: DOOR INSTL D/S ~ QUAD II ~ SEQ ACCESS
DRAWING NO.: LDW280-52648
EO NO.: B3

ISSUED BY LIAISON C. HEDGES / X86226 SECTION VDI GROUP NO. 335 PL 25

01

NAS 9-1100

my β

ENG 32.1 REV 3-65

GRUMMAN AIRCRAFT ENGINEERING CORP.
CODE IDENT NO. 26512
ENGINEERING ORDER *

DWG. NO. LDW280-52648		EO NO. B4
CONTROL INFO NO. LM29-1065		

ON-1 INSTL ZONE D4 F/D: MS20470A4(23), AN960D4L(23) UNDER TAIL ONLY, WAS MS20470A4 (23) IN VIEW *-* (REF EO-A1) EXPAND PICTURE TO INCLUDE INSTALLATION OF LDW280P17967-185 WITH MS20470A4 RIVETS & AN960D4L WASHERS. AS SHOWN:

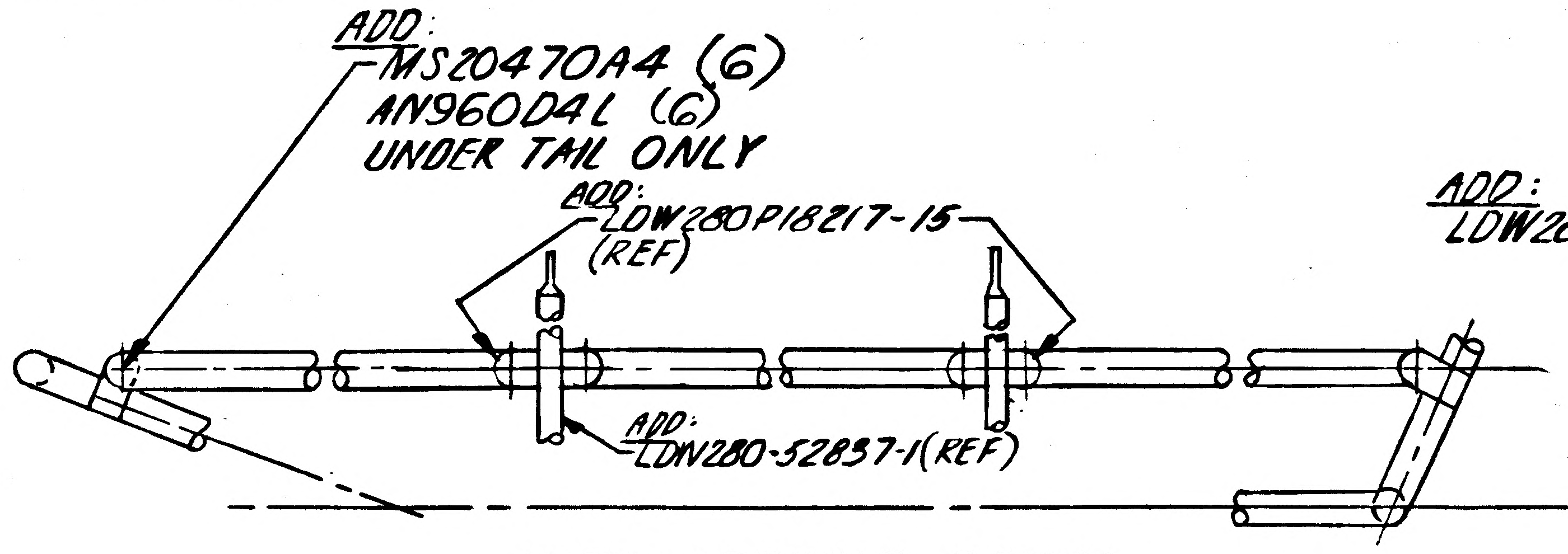

VIEW LOOKING DOWN
VIEW *-* (REF EO-A1)

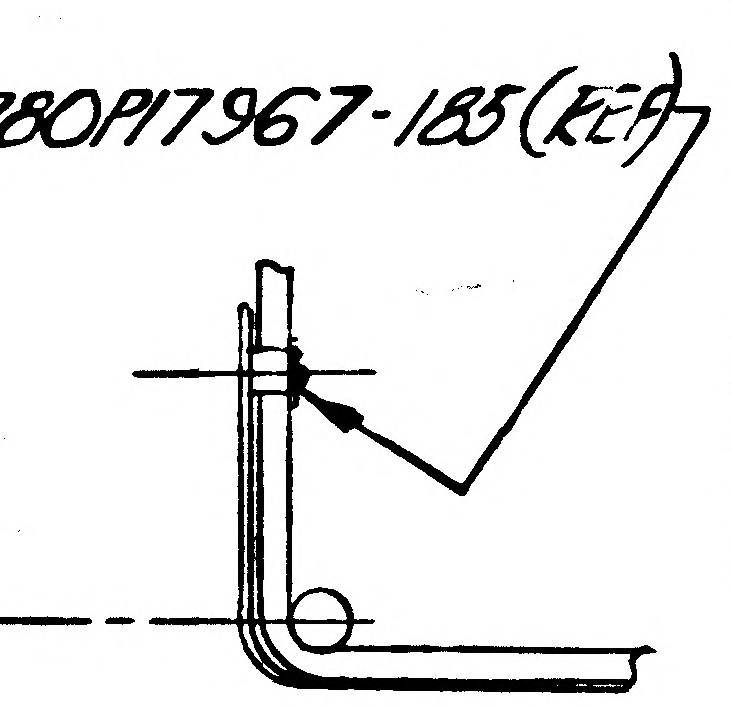

VIEW F-F
(REF)

DETAIL SPEC REQ		CL II ENGRG CHG	✓	CL I ENGRG CHG	29

REASON FOR EO: TO PREVENT CRACKING OF STRAPS. & TO CLARIFY INSTL OF LDW280P17967-185

DESCRIPTION OF EO: ON-1 IN F/D & B/M ADDED AN960D4L WASHERS TO MS20470A4 RIVETS. EXPANDED VIEW *-* (REF EO-A1) TO INCLUDE INSTL OF LDW280P17967-185, WITH MS20470A4 & AN960D4L 6 EA

GAEC C EO RELEASE: JC

MODEL	EFFECTIVITY PROCURING ACTIVITY NO.	GAEC UNIT NO.	SUB CONTR UNIT NO.
LM	LM-2(32) THRU		
	LM-15(45)		

DRAWING CHANGE REQD		DISPOSITION OF PARTS									
✓		✓		APPROVED BY				—	~	W.7.	9
				DATE	8/14/67			—	~	8-7-67	8/14/67
REVISE DWG	RECORD EO	REWORK	SCRAP	1	VDI	SUPPORT	RELIAB. GROUP	GROUP LEADER	STRESS GROUP	LIAISON ENGRG	PROJ ENGRG

PRIORITY	DRAWING TITLE	DRAWING NO.	EO NO.
C29	DOOR INSTL DESCENT STAGE QUAD II ACCESS	LDW280-52648	B4

ISSUED BY LIAISON C. J. MONTEBELLO X7930 SECTION VDI GROUP NO. 335 PL 35

01 NAS 9-1100

ENG 32.1 REV 3-65

B

GRUMMAN AIRCRAFT ENGINEERING CORP.
CODE IDENT NO. 26512
ENGINEERING ORDER

DWG. NO. LDW280-52648
EO NO. B5
CONTROL INFO NO. LM-5-16056

ON-1 INSTL (FOR LM-2) ON-9 INSTL. (FOR LM-3) ON-13 INSTL. (FOR LM-4 THRU-15) INSTL ZONE D4 F/D MS20470A4 (23) AN960D4L(23) UNDER TAIL ONLY, WAS MS20470A4(23 IN VIEW *-* (REF. EO-A1 EXPAND PICTURE TO INCLUDE INSTALLATION OF LDW280P17967-185 WITH MS20470A4 RIVETS & AN960D4L WASHERS AS SHOWN ON E.O. B4

THIS IS A REV. OF E.O. B4

RELEASED BY LIAISON

DETAIL SPEC REQ	☐	CL II ENGRG CHG	✓	CL I ENGRG CHG	☐

REASON FOR EO: TO PREVENT CRACKING OF STRAPS & TO CLARIFY INSTL. OF LDW280P17967-185 RTE. 05-131-291

DESCRIPTION OF EO: REF. E.O. B4 -9 INSTL FOR LM-3 (33) & -13 INSTL. FOR LM-4 (34) THRU LM-15 (45) WAS -1 INSTL. LM-2 (32) THRU LM-15 (45).

GAEC EO RELEASE: JK

MODEL	PROCURING ACTIVITY NO.	GAEC UNIT NO.	SUB CONTR UNIT NO.
LM		LM-2 (32)	
		THRU	
		LM-15 (45)	

DRAWING CHANGE REQD: REVISE DWG	RECORD EO	DISPOSITION OF PARTS: REWORK	SCRAP
✓		✓	

		SUPPORT	RELIAB. GROUP	GROUP LEADER	STRESS GROUP	LIAISON ENGRG	PROJ ENGRG
APPROVED BY				—		JH	
DATE	8/22/67			—	8/22/67	8-21-67	8/23/67
	VEZ						

PRIORITY: C

DRAWING TITLE: DOOR INSTL. DESENT STAGE QUAD II ACCESS

DRAWING NO.: LDW 280-52648

EO NO.: B5

ISSUED BY LIAISON J. JARVIS / E.P SECTION V.D.I. GROUP NO. 335 PL 25

01

NAS 9-1100

ENG 32.1 REV 3-66

GRUMMAN AIRCRAFT ENGINEERING CORP.
CODE IDENT NO. 26512
ENGINEERING ORDER

DWG. NO. LDW280-52648 | EO NO. B6
CONTROL INFO NO. LM-29-1073

ON-1 F/D REVISE SECTION D-D AS SHOWN:
③ADD NOTE ✱. SHIM A/R USING ANY COMBINATION OF AN960C416 WASHERS.
①IN B/M REMOVE AN960C416L WASHERS (16).

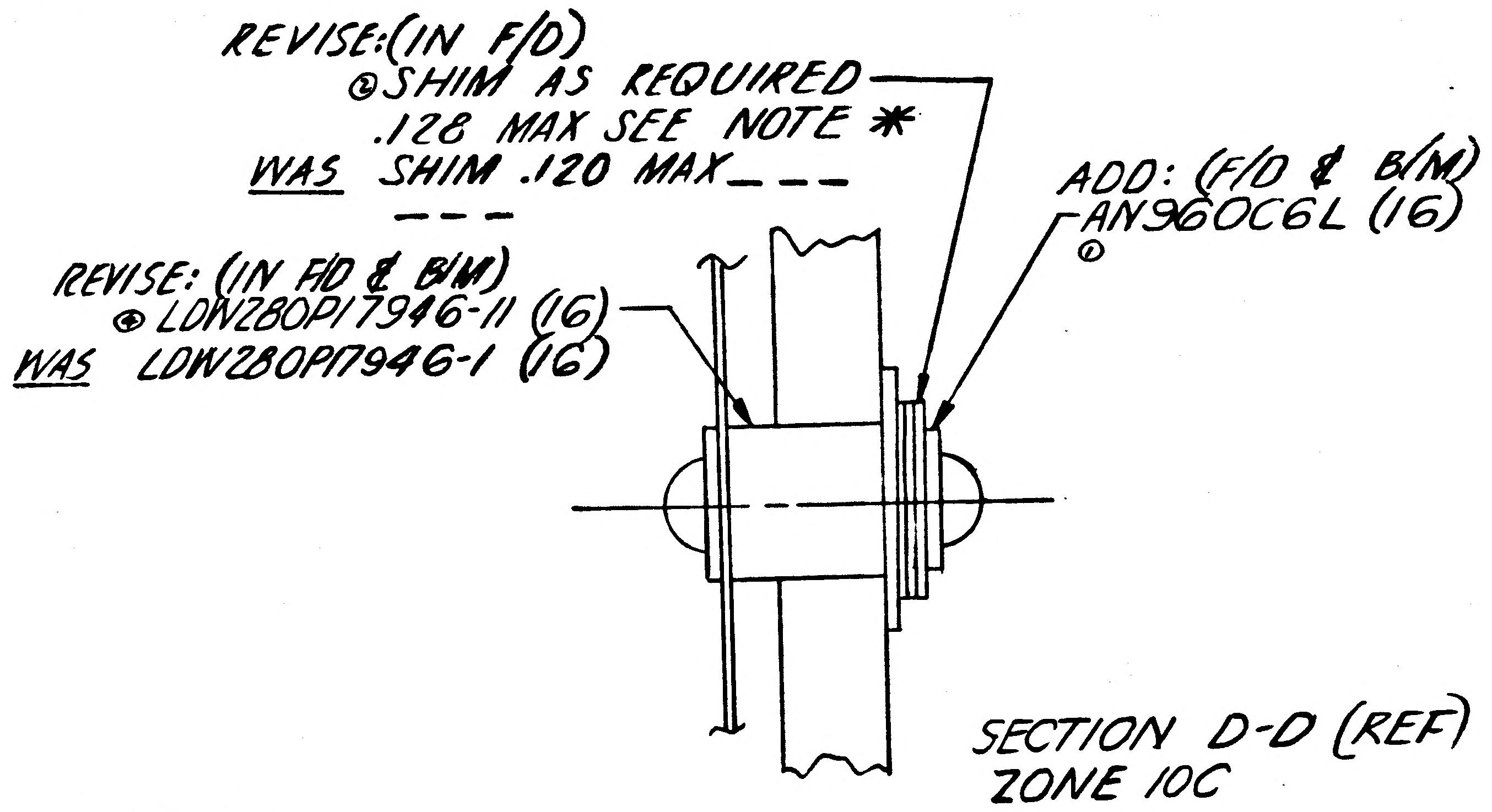
REVISE:(IN F/D)
②SHIM AS REQUIRED
.128 MAX SEE NOTE ✱
WAS SHIM .120 MAX
ADD: (F/D & B/M)
AN960C6L (16)
①
REVISE: (IN F/D & B/M)
④ LDW280P17946-11 (16)
WAS LDW280P17946-1 (16)
SECTION D-D (REF)
ZONE 10C

✱ - NEXT NOTE NUMBER.

DETAIL SPEC REQ	☐	CL II ENGRG CHG	✓	CL I ENGRG CHG	☐

REASON FOR EO: ①WASHER OMITTED FROM INSTL ②DESIGN REQUIREMENT ③ TO COMPLY WITH SHIM REQUIREMENT ④ TO AGREE WITH LDW280P17946 DETAIL

DESCRIPTION OF EO: ON-1 IN F/D & B/M: ADDED ①AN960C6L (16) WASHERS; ②REVISED CALLOUT "SHIM AS REQD .128 MAX SEE NOTE ✱"; WAS "SHIM .120 MAX" ③ADDED NOTE ✱ SHIM A/R USING ANY COMBINATION OF AN960C416 WASHERS. ④LDW280P17946-11 (16) WAS LDW280P17946-1 (16). ①REMOVED AN960C416L WASHERS FROM B/M.

29
GAEC C EO RELEASE

MODEL	EFFECTIVITY: PROCURING ACTIVITY NO.	GAEC UNIT NO.	SUB CONTR UNIT NO.
LM	LM-2 (32) THRU		
	LM-15 (45)		

DRAWING CHANGE REQD: REVISE DWG	RECORD EO	DISPOSITION OF PARTS: REWORK	SCRAP
✓		✓	

APPROVED BY	JAP			—	~	W.T.	WRB	
DATE	10/12/67			—	~	8/23/67	10/12/67	8-31-67
1	VDI	SUPPORT	RELIAB. GROUP	GROUP LEADER	STRESS GROUP	LIAISON ENGRG	PROJ ENGRG	GOVT

PRIORITY	DRAWING TITLE	DRAWING NO.	EO NO.
C	DOOR INSTL DESCENT STAGE QUAD II SEQ ACCESS	LDW280-52648	B6

ISSUED BY LIAISON C. J. MONTEBELLO X7930 SECTION VDI GROUP NO. 335 PL 35

01
NAS 9-1100

my

ENG 32.1 REV 3-66

GRUMMAN AIRCRAFT ENGINEERING CORP.
CODE IDENT NO. 26512 *
ENGINEERING ORDER

DWG. NO. LDW280-52648
EO NO. B7
CONTROL INFO NO. LM-29-1077

THIS IS A REVISION OF EO B6

REVISE DASH NOS:- ON-3,-11 & -15 ASSYS, F/D REVISE SECTION D-D AS SHOWN:
WAS ON-1 F/D REVISE SECTION D-D AS SHOWN:

DETAIL SPEC REQ ☐ CL II ENGRG CHG ✓ CL I ENGRG CHG ☐

REASON FOR EO: WASHERS REQD ON SUB-ASSY ONLY.

DESCRIPTION OF EO: REF EO B6:- ON-3,-11 & -15 IN F/D & B/M:
WAS ON-1 IN F/D & B/M:

GAEC EO RELEASE: ② JK 29

MODEL	EFFECTIVITY: PROCURING ACTIVITY NO.	GAEC UNIT NO.	SUB CONTR UNIT NO.
LM	LM-2 (32) THRU		
	LM-15 (45)		

DRAWING CHANGE REQD: REVISE DWG ✓ RECORD EO
DISPOSITION OF PARTS: NOT REQD (REWORK / SCRAP)

		SUPPORT	RELIAB. GROUP	GROUP LEADER	STRESS GROUP	LIAISON ENGRG	PROJ ENGRG	GOVT
APPROVED BY	JaP			—	~	W.F.	[illegible]	[illegible]
DATE	9/18/67			—	~	9/15/67	9/18/67	15-67
	VDI							

PRIORITY: C29
DRAWING TITLE: DOOR INSTL DESCENT STAGE QUAD II SEQ ACCESS
DRAWING NO.: LDW280-52648
EO NO.: B7

ISSUED BY LIAISON C.J. MONTEBELLO X7930 SECTION VDI GROUP NO. 335 PL 35

01

NAS 9-1100

ENG 32.2 REV 3-65

GRUMMAN AIRCRAFT ENGINEERING CORP.
CODE IDENT NO. 26512
ENGINEERING ORDER

DWG. NO. LE0280
EO NO. 784
CONTROL INFO NO. LDW280B0091

ON DASH NOS. NOTED * WITH N/A NOTED ** REMOVE LM4(34) THRU LM15(45) EFFECTIVITY REQMTS FROM THE FOLLOWING DRAWINGS.

DWG NO LDW280	DASH NO. *	TITLE	N/A NO. ** LDW280	CHG NO.
52648	-13	DOOR INSTL D/S QUAD II SEQ ACCESS	54553	B8
52768	-3-5	FOIL ASSY D/S QUAD II SEQ PLUME IMPINGE	52767	B3
52769	-11	SKIN ASSY D/S QUAD II SEQ PLUME IMPINGE	52767	B1
52744	-25-27	SKIN ASSY D/S QUAD II SEQ PLU IMP SHIELD	52742	A6
18130	-15-17	ZEE QUAD III UPR PLUME IMP. SHIELD	52744	A9
52743	-15-17	FOIL ASSY D/S QUAD II PLUME IMP SHIELD UPR DK	52742	A3
52741	-3	SKIN ASSY D/S QUAD II PLUME IMP SHIELD SIDE FIXED	52739	A2
18125	-19-21	ZEE D/S QUAD II AMBIENT HE ACCESS PLM IMP SHLD	52743	B2
52740	-1	FOIL ASSY D/S QUAD II PLME IMP SHIELD SIDE FIXED	52739	A3
52837	-3	FRAME ASSY D/S QUAD II SEQ ACCESS DOOR	52648	A7
P18174	-1-3	BLANKET ASSY D/S QUAD II SEQ ACCESS COVER	52648	A1
52767	-1	SHIELD ASSY D/S QUAD II SEQ A/D PLM IMP	52648	B4
18221	-17 -11	ANGLE D/S SEQ ACCESS DOOR	52837 52665	A5
P17537	-31-33-35-37-39-41-47 -27-29	FRAME ASSY D/S SEQ THERMAL SHIELD ACCESS DR	52837 52674	A6
P18170	-15-17-19	LINK D/S SEQ ACCESS DOOR	52837	B2
P18172	-11-13 -11-15-17-18	TUBES D/S QUAD II SEQ A/D & JAMB L.H. VERT	52837 52674	A3
P18173	-11-15 -13-15	TUBE D/S QUAD II SEQ A/D L.H. LWR.	52837 52674	A4
P18214	-11-13-15-19-21-23	TUBE D/S QUAD II SEQ A/D LH UPR	52837	A4
P18215	-11-13-15-17-19	PLATE D/S QUAD II SEQ A/D-YOKE	52837	A2
P18216	-11-13-15-17-19-21	PLATE D/S QUAD II SEQ A/D-YOKE	52837	A2
P18217	-11-13-15-17-19	TEE D/S SEQ ACCESS DOOR STRAP SPT	52837	B1
P18218	-11-13-15-17 -19	ANGLES D/S QUAD II SEQ A/D STRAP SPT	52837 52665	B2
P18181	-11-13-15-17-19 -13-19	TUBE D/S QUAD II SEQ A/D R.H. UPR	52837 52674	A1
P18180	-11-13-15-16-17-19	TUBE D/S QUAD II SEQ A/D	52674	A1
P18213	-11 -13-15-17	CLAMP D/S QUAD II SEQ ACCESS JAMB LH LWR	52674 52665	A3
P18176	-23-25	BLANKET ASSY D/S QUAD II SEQ UPR & SIDE PNL	52665	A6
P17581	-3-7	BLANKET ASSY D/S QUAD II VERT	52665	A4
P17575	-13	WASHER D/S THERMAL SHIELD LWR DK STDOFF	52665	B4
52582	-1-15	HINGE ASSY D/S QUAD II SEQ SPT ACCESS FLAP	52674	B3
52674	-1-3	JAMB ASSY D/S QUAD II SEQ ACCESS DOOR	52665	A4
52739	-3	SHIELD ASSY D/S QUAD II PLNE IMP. SIDE THERM.	52665	A3
52742	-9-11	SHIELD ASSY D/S QUAD II IMP SHIELD UPR DK	52665	A9

DETAIL SPEC REQ ☐ CL II ENGRG CHG ☐ CL I ENGRG CHG ☑ LCD 1433 CCA 586

(5)

REASON FOR EO: ALSEP REDESIGN

DESCRIPTION OF EO: ON -* REMOVED LM-4-15 REQMTS FOR N/A LDW 280-**.

GAEC EO RELEASE: SK 11/1/67

MODEL	PROCURING ACTIVITY NO.	GAEC UNIT NO.	SUB CONTR UNIT NO.
LM		LM4(34)	
		THRU	
LM		LM15(45)	

DRAWING CHANGE REQD: REVISE DWG ✓ RECORD EO
DISPOSITION OF PARTS: REWORK SCRAP ✓
APPROVED BY: P VD1 — DATE 10/27/67
GROUP LEADER — DATE 10-27-67
STRESS GROUP — DATE 10/30/67
PROJ ENGRG — DATE 10/30/67
DATE 11-1-67
SUPPORT RELIAB. GROUP LIAISON ENGRG

PRIORITY: C
DRAWING TITLE: NOTED
DRAWING NO.: LEO 280
EO NO.: 784

11-10
ISSUED BY PLANTE 1156 SECTION VD1 GROUP NO. 335 PL 25

01
NAS 9-1100

B

ENG 32.1 REV 3-65

GRUMMAN AIRCRAFT ENGINEERING CORP.
CODE IDENT NO. 26512

ENGINEERING ORDER

DWG. NO. LDW280-52648
EO NO. B9
CONTROL INFO NO. LDW280-B0819

REMOVE LM-3(33) REQUIREMENTS FROM -9 AND ADD LM-3(33)

REQUIREMENTS TO -1 N/A. LDW 280-53553

1 REQUIRED PER MODULE

DETAIL SPEC REQ ☐
CL II ENGRG CHG ☐
CL I ENGRG CHG ☑ LCD 2446/CCA 788

REASON FOR EO: REMOVAL OF RTG SUPPORT TRUSS

DESCRIPTION OF EO: REMOVED LM-3(33) FROM -9 & ADDED LM-3(33) TO -1

GAEC EO RELEASE: (5) JK 1/11/68

MODEL	PROCURING ACTIVITY NO.	GAEC UNIT NO.	SUB CONTR UNIT NO.
LM		LM-3(33)	

DRAWING CHANGE REQD: REVISE DWG ✓ RECORD EO

DISPOSITION OF PARTS: REWORK ✓ SCRAP

APPROVED BY				PSt	NM		JP	Cottl
DATE	12/21/67			12/20	12/21/67		12/21/67	1-11-68
G	VDI	SUPPORT	RELIAB. GROUP	GROUP LEADER	STRESS GROUP	LIAISON ENGRG	PROJ ENGRG	GOVT.

PRIORITY: C

DRAWING TITLE: DOOR INSTL DESCENT STAGE QUAD II SEQ ACCESS

DRAWING NO.: LDW280-52648

EO NO.: B9

1-12-68
ISSUED BY D. SHAPIRO (X 9505) SECTION VEH. DES. INT. GROUP NO. 335 PL 25

01

NAS 9-1100

ENG 32.1 REV 3-65

GRUMMAN AIRCRAFT ENGINEERING CORP.
CODE IDENT NO. 26512
ENGINEERING ORDER

DWG. NO. LDW280-52648 EO NO. B10
CONTROL INFO NO. LDW280B2722

REVISE -9 INSTL AS SHN:

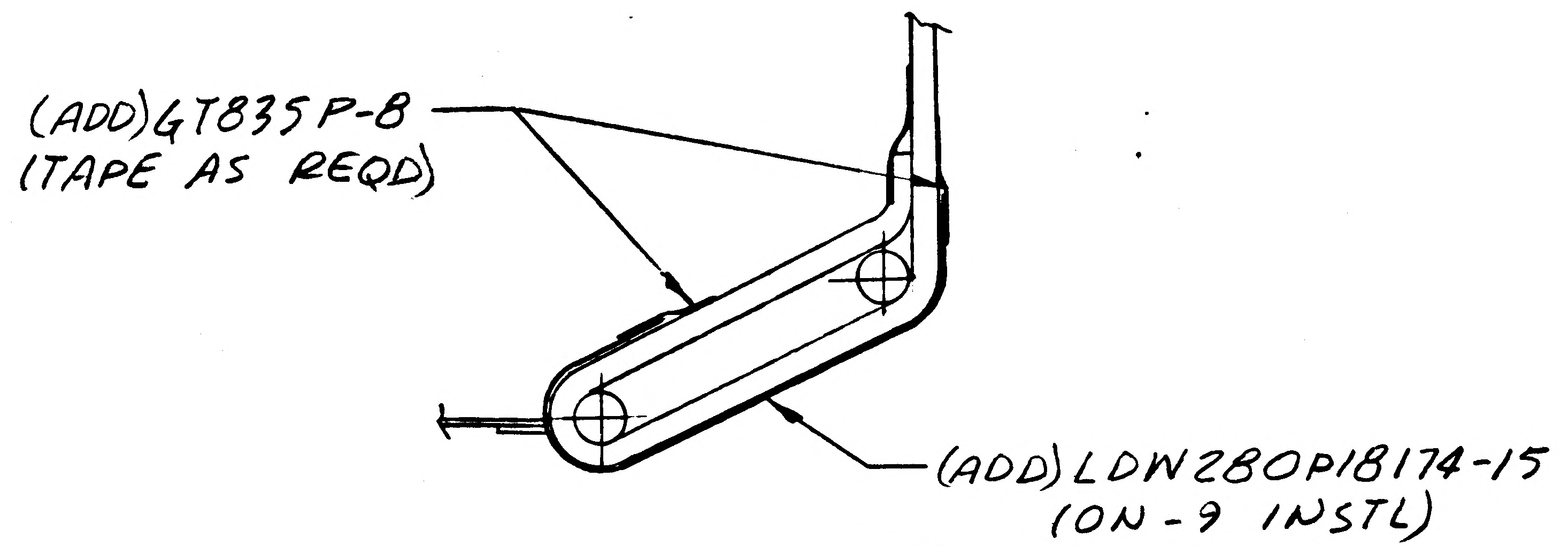

SECT E-E (REF)

DETAIL SPEC REQ		CL II ENGRG CHG		CL I ENGRG CHG	✓	LCD 2360 PKG 30

REASON FOR EO: PLUME HEATING PROTECTION

DESCRIPTION OF EO: ON-9 INSTL, ADDED LDW280P18174-15 & GT835P-8.

GAEC EO RELEASE ⑤: H.F 4/8/66

MODEL	PROCURING ACTIVITY NO.	GAEC UNIT NO.	SUB CONTR UNIT NO.
LM		LM-3(33)	

DRAWING CHANGE REQD: REVISE DWG ✓ RECORD EO
DISPOSITION OF PARTS: REWORK ✓ SCRAP

APPROVED BY								
	JAS			PST				
DATE	4/4/68	4/5/65		4-3-68	4/5/68		4/6/68	4-4-64
P	VDI	THERMO SUPPORT	RELIAB. GROUP	GROUP LEADER	STRESS GROUP	LIAISON ENGRG	PROJ ENGRG	~~CONT~~

PRIORITY: C
DRAWING TITLE: DOOR INSTL - D/S QUAD II SEQ ACCESS
DRAWING NO.: LDW280-52648
EO NO.: B10

CDR 040968
ISSUED BY S. TAMIRES/P THORJUSEN x1153 SECTION VDI GROUP NO. 335 PL 25

0 1

NAS 9-1100

ENG 32.1 REV 3-65

GRUMMAN AIRCRAFT ENGINEERING CORP.
CODE IDENT NO. 26512
ENGINEERING ORDER

DWG. NO. LDW280-52648		EO NO. C1
CONTROL INFO NO. LDW280B3035		

REMOVE LDW280P18174-15 FROM -1 INSTL
RESTRICT -1 TO LM-2 (32) EFF. (WAS LM-2 & LM-3)

CREATE -17 INSTL IDENTICAL TO -1 EXCEPT
-17 HAS (1) LDW280P18174-15
N/A FOR -17 LDW280-53553, LM-3 (33) EFF, 1 REQD

IN SECT E-E: LDW280P18174-15 [(ON -17) NOW (ON -1) WAS]

≠ -1 CONTAINING LDW280P18174-15 MAY BE IDENTIFIED AS -17

DETAIL SPEC REQ	☐	CL II ENGRG CHG	☐	CL I ENGRG CHG	☑	LCD 2360 PKG 30 (5)

REASON FOR EO: PLUME HEATING PROTECTION

DESCRIPTION OF EO: RESTRICTED -1 TO LM-2 (WAS LM-2 & LM-3) REMOVED LDW280P18174-15 FROM -1 CREATED -17, LM-3 EFF.

Ⓡ GAEC EO RELEASE: VC 4/22/68

MODEL	EFFECTIVITY		
	PROCURING ACTIVITY NO.	GAEC UNIT NO.	SUB CONTR UNIT NO.
LM		LM-3 (33)	

DRAWING CHANGE REQD		DISPOSITION OF PARTS	
REVISE DWG	RECORD EO	REWORK	SCRAP
✓		≠	

APPROVED BY								
DATE	4/18/68			4-18-68	4/22/68		4/22/68	4-22-68
P	VD1	SUPPORT	RELIAB. GROUP	GROUP LEADER	STRESS GROUP	LIAISON ENGRG	PROJ ENGRG	~~GOVT~~

PRIORITY	DRAWING TITLE	DRAWING NO.	EO NO.
C	DOOR INSTL-D/S, Q II SEQ ACCESS	LDW280-52648	C1

042568
ISSUED BY ROESSLER / THORJUSEN 1153 SECTION VD1 GROUP NO. 335 PL 25

01

NAS 9-1100

ENG 32.1 REV 3-65

GRUMMAN AIRCRAFT ENGINEERING CORP.
CODE IDENT NO. 26512
ENGINEERING ORDER

DWG. NO. LDW280-52648
EO NO. C2
CONTROL INFO NO. LDW280B2976

CREATE -19 INSTL IDENTICAL TO -17 EXCEPT
(1) -21 DOOR ASSY REPLACES -3

-21 IDENTICAL TO -3 EXCEPT (1) LDW280P18174-5
BLANKET ASSY REPLACES LDW280-52648-5 & -7

-19 N/A LDW280-53553, LFM-155 EFF.
1 REQD

ADD NOTE * (USE NEXT AVAILABLE NOTE NUMBER)
THIS DWG AFFECTED BY LFM 155 WHICH MAY
BE USED ON LM-3 (33)

LFM

DETAIL SPEC REQ	☐	CL II ENGRG CHG	☐	CL I ENGRG CHG	✓	LCD 2899 PKG 1	(5)

REASON FOR EO: PLUME IMPINGEMENT PROTECTION SEVEN SEC. DOCKING

DESCRIPTION OF EO: CREATED -19 INSTL & -21 ASSY
ADDED NOTE *

GAEC EO RELEASE: JK 4/24/68

MODEL	EFFECTIVITY PROCURING ACTIVITY NO.	GAEC UNIT NO.	SUB CONTR UNIT NO.
LM	LFM 155	LM-3(33)	

DRAWING CHANGE REQD: REVISE DWG	RECORD EO	DISPOSITION OF PARTS: REWORK	SCRAP
✓		NOT REQD	

APPROVED BY								
DATE	4/19/68	4/22/68		4/19/68	4/22/68		4/22/68	4-24-68
	V01	THERMAL SUPPORT	RELIAB. GROUP	GROUP LEADER	STRESS GROUP	LIAISON ENGRG	PROJ ENGRG	~~GOVT~~

PRIORITY	DRAWING TITLE	DRAWING NO.	EO NO.
C	DOOR INSTL - D/S, QII SEQ ACCESS	LDW280-52648	C2

042668
ISSUED BY ROESSLER / THORJUSEN x1153 SECTION V01 GROUP NO. 335 PL 25

01

NAS 9-1100

GRUMMAN AIRCRAFT ENGINEERING CORP.
CODE IDENT NO. 26512

ENG 32.1 REV 3-65

ENGINEERING ORDER

DWG NO. LDW280-52648 | EO NO. C3
CONTROL INFO NO. LM-5-20130

IN FLD & B/M (ON-1)

**
NOTE TO DRAFTING:
ADD PROJ VIEW

* USE NEXT AVAILABLE NOTE #

(ADD)
NOTE *
USING MOLD RELEASE PER PARA 3.1(C) OF LSP14-18051, COAT OUTSIDE & HOLE OF LDW280M17705.

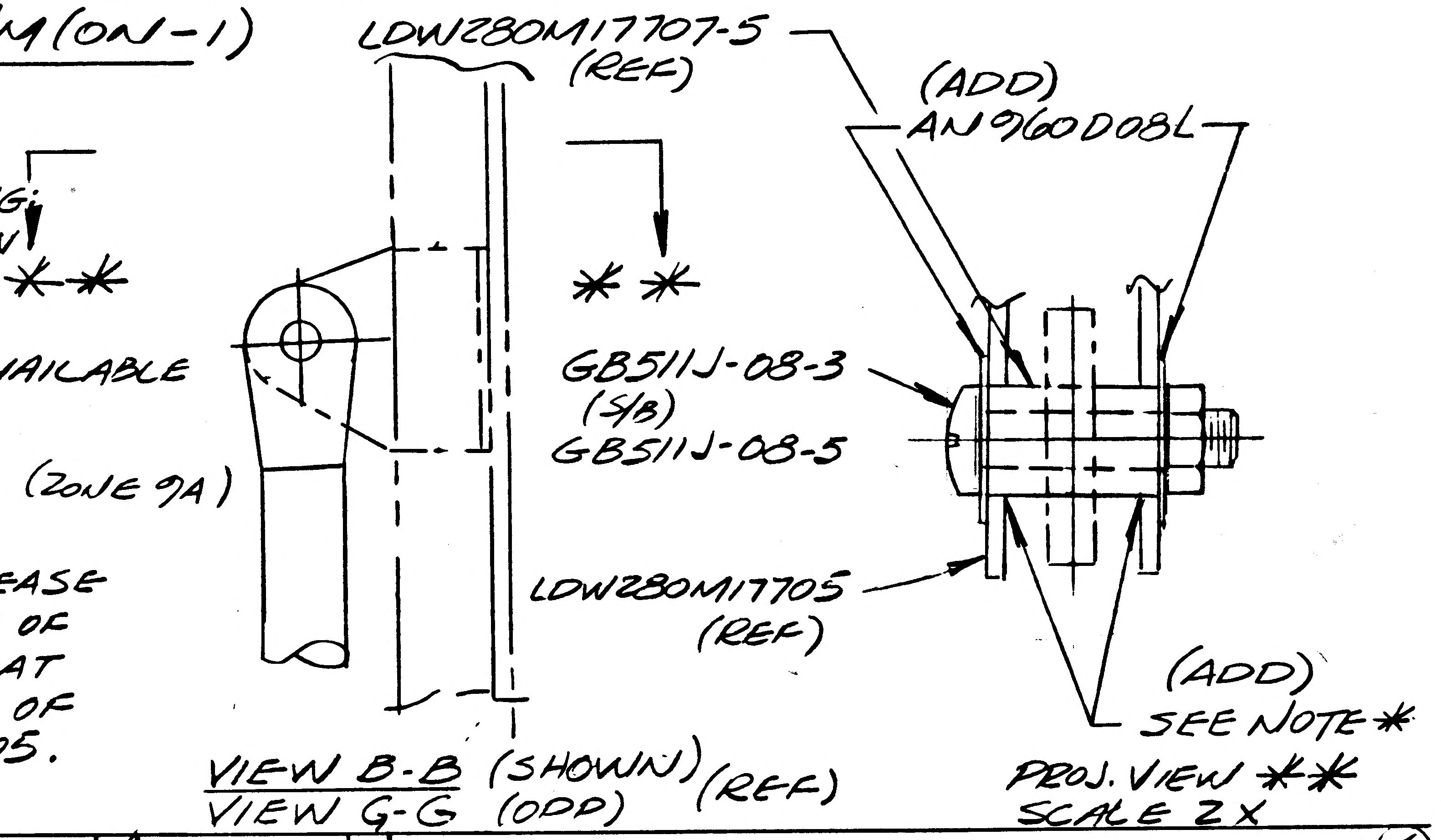

VIEW B-B (SHOWN)
VIEW G-G (OPP)
(REF)

PROJ. VIEW **
SCALE 2X

DETAIL SPEC REQ	☐	CL II ENGRG CHG	✓	CL I ENGRG CHG	☐

REASON FOR EO: PREVENT BONDING OF BUSHING ONTO LDW280M17705.

DESCRIPTION OF EO: IN FLD & B/M (ON-1) REMOVED GB511J-08-3(2); ADDED AN960D08L (4) GB511J-08-5(2), NOTE * & PROJ VIEW **

GAEC EO RELEASE: C JK 33 (5)

MODEL	PROCURING ACTIVITY NO.	GAEC UNIT NO.	SUB CONTR UNIT NO.
LM		LM3(33)	

DRAWING CHANGE REQD: REVISE DWG	RECORD EO	DISPOSITION OF PARTS: REWORK	SCRAP
✓		✓	

APPROVED BY		SUPPORT	RELIAB. GROUP	GROUP LEADER	STRESS GROUP	LIAISON ENGRG	PROJ ENGRG	
DATE	6/8/68				6-3-68	6/6/8	6/6/68	6/3/68
	VDI							

PRIORITY	DRAWING TITLE	DRAWING NO.	EO NO.
C	DOOR INSTL, DESCENT STAGE QUAD II SEQ. ACCESS	LDW280-52648	C3

ISSUED BY & LIAISON MDREYES X8675S SECTION VDI/P. THORJUSEN GROUP NO. 335 PL 25

01 NAS 9-1100

GRUMMAN AIRCRAFT ENGINEERING CORP.
CODE IDENT NO. 26512
ENGINEERING ORDER

ENG 32.1 REV 3-65

DWG. NO. LDW280-52648
EO NO. C4
CONTROL INFO NO. LM-5-20157

THIS EO IS A REVISION OF EO C3

IN FLD & B/M (ON-1) S/B IN FLD & B/M (ON-17)

(FOR REF INFO SEE EO C1)

DETAIL SPEC REQ ☐ CL II ENGRG CHG ☑ CL I ENGRG CHG ☐

GAEC EO RELEASE: (5) C

REASON FOR EO: PREVENT BONDING OF BUSHING ON TO LDW280M17705 (EO CORRECTION)

DESCRIPTION OF EO: REF EO C3
ON-17 WAS ON-1

EFFECTIVITY

MODEL	PROCURING ACTIVITY NO.	GAEC UNIT NO.	SUB CONTR UNIT NO.
LM		LM-3 (33)	

DRAWING CHANGE REQD: REVISE DWG ✓ RECORD EO
DISPOSITION OF PARTS: REWORK ✓ SCRAP

	APPROVED BY							
DATE 6-4-68	6/8 VDI	SUPPORT	RELIAB. GROUP	GROUP LEADER	STRESS GROUP 6-4-68	LIAISON ENGRG 6-4-68	PROJ ENGRG 6/8	6/4/68

PRIORITY: C
DRAWING TITLE: POOR INSTL D/S QUAD II SEQ ACCESS
DRAWING NO.: LDW280-52648
EO NO.: C4

ISSUED BY LIAISON, P. HUSTED, SECTION VDI GROUP NO. 335 PL 25

01

NAS 9-1100

LDW280-52656 B

LM	LDW280-54553	LM-15(45)	1
LM	LDW280-54553	LM-14(44)	1
		LM-13(43)	1
		LM-12(42)	1
		LM-11(41)	1
		LM-10(40)	1
		LM-9(39)	1
		LM-8(38)	1
		LM-7(37)	1
		LM-6(36)	1
		LM-5(35)	1
LM	LDW280-54553	LM-4(34)	1

PART NO. LDW280-52656-29

MODEL OR END ITEM	NEXT ASSY	MODULE OR SER NO.	REQD PER MODULE OR END ITEM
LM	LDW280-53553	LM-3(33)	1
LM	LDW280-52553	LM-2(32)	1

PART NO. LDW 280-52656-19 | GAEC SCH NO.

MODEL OR END ITEM	NEXT ASSY	MODULE OR SER NO.	REQD PER MODULE OR END ITEM
LM	LDW230-54553	LM-15(45)	
		LM-14(44)	
		LM-13(43)	
		LM-12(42)	
		LM-11(41)	
		LM-10(40)	
		LM-9(39)	
		LM-8(38)	
		LM-7(37)	
		LM-6(36)	
		LM-5(35)	
	LDW280-54553	LM-4(34)	
	LDW280-53553	LM-3(33)	
LM	LDW280-52553	LM-2(32)	

PART NO. LDW 280-52656-11 | GAEC SCH NO. 52

MODEL OR END ITEM	NEXT ASSY	MODULE OR SER NO.	REQD PER MODULE OR END ITEM
LM	LDW280-54509	LM-15(45)	1
		LM-14(44)	1
		LM-13(43)	1
		LM-12(42)	1
		LM-11(41)	1
		LM-10(40)	1
		LM-9(39)	1
		LM-8(38)	1
		LM-7(37)	1
		LM-6(36)	1
		LM-5(35)	1
	LDW280-54509	LM-4(34)	1
	LDW280-53509	LM-3(33)	1
LM	LDW280-52509	LM-2(32)	1

PART NO. LDW 280-52656-9 | GAEC SCH NO. 50

WORK PACKAGE FUNCTION #110 5

SH REV STATUS: FOR DESCRIPTION OF REV SEE SUBQ SH

SHEET	1.00	1.10		2.00	2.01	2.02	3.00	4.00	5.00
REV	B	B		B	B	B	B	B	B
SHEET									
REV									
SHEET									
REV									

LAST SECT LTR USED	T	GRUMMAN REL INFO B	
LAST DASH NO. USED	-35	PRIM NO. 207	JK(001) mP-163-11/5/67

UNLESS OTHERWISE SPECIFIED DIMENSIONS ARE IN INCHES.
TOLERANCE UNLESS SPECIFIED
FRACTIONS - DECIMALS - ANGLES
± 1/32 ±.020 ± 1/2°
ORIG DWG AUTH
DETAIL SPEC REQUIREMENT
CLASS II ENGRG CHANGE
CLASS I ENGRG CHANGE

CONTRACT NO. NAS 9-1100 | LINE ITEM | DOCUMENTATION TYPE II

DRAWN BY	P.Como 3-24-67	RELIAB	
LAYOUT BY	J.LANG		
CHECKED BY	4·27·67		
~~GR.LDR~~			
VEHDES INT	5/2/67		
STRUCT	5/2/67	PROJ ENGR	W.R.Bischoff 10/2
STRUCT		REL GROUP	10/4/67
WEIGHTS			

GRUMMAN AIRCRAFT ENGRG CORP
BETHPAGE, L. I., NEW YORK

STANDOFF INSTALLATION
DESCENT STAGE-FWD THERMAL

SIZE B | CODE IDENT NO. 26512 | LDW280-52656 | B

B

SCALE NONE | SHEET 1.00 OF 8

ENG 77 1 12-65

01

NAS 9-1100

REVISIONS FOR CONTINUATION OF REVISIONS SEE SHEET ______

CHANGE LTR	ITEM NO.	SHEET NO.	ZONE	GRUMMAN INFO ONLY	DET SPEC	CLASS I	CLASS II	ENGRG ORDER	DESCRIPTION	EFFECTIVITY	DISPOSITION OF EXISTING PARTS		CHANGED BY AND DATE	ENGRG APPD	APPD
											REWORK	SCRAP			
A	1	1, 1.10, 2, 2.01 3, 4, 5	4, 5 ABC					EO A1	EO A1 INITIAL DRAWING RELEASE PARTS MADE FROM EO	LM-2, -3	NOT	REQD			
	2	1.00 THRU 5.00						EO A2	IN FLD & B/M, REMOVED -1, -3, -5, -7 & ADDED -9 THRU -35 IN FLD, REMOVED SECT D-D, H-H, M-M, DETAIL "F" & NOTE 4, ADDED SECT N-N, P-P, R-R, DETAIL "S" & NOTES 5, 6, 7, 8, 9, 10. REVISED NOTE 2 & 3 NOTE 2 WAS: BOND LDW280P17523-3 TO LDW280P17700-7 AS SHOWN WITH EPON 934 PER LSP14-2500, NOTE 3 WAS: LDW280-P17936-29 & -51 SEW TO LDW280P17460 AT 3/16 ± 1/16 FROM EDGES OF LDW280P17936-29 & -51 IN ACCORDANCE WITH FED. STD #7514 & STITCH TYP 301 ADDED SH. 2.02	LM-2 THRU -15	✓		R Como 4-1-67		
	3	3.00 4.00 2.00, 1.10	12A 6C					EO A3	ON-13 REMOVED LDW280P17524-1, 6 PLACES ON-19 LDW280P17964-3 WAS LDW280P17964-7		NOT	REQD		WRS	10/4/67
B	1	3.00 2.00 1.10 2.02	5B 2B					EO B1	IN FLD & B/M FOR -25 ADDED LDW280P17460-75 FOR -35 ADDED LDW280P17460-77				M		

CHG APPROVED	LTR	GROUP LDR	VEH DES INT	STRUCT	STRUCT	WEIGHTS	RELIAB
	B	—	8/2/67				

GRUMMAN AIRCRAFT ENGRG CORP., BETHPAGE, L. I., NEW YORK

SIZE	CODE IDENT NO.		
B	26512	LDW280-52656	B
SCALE NONE			SHEET 1.10

ENG 77.16 3-66

01

NAS 9-1100

QTY PER ASSEMBLY																				
-27	-25	-23	-21	-19	-17	-15	-13	-11	-9	PART NO.	I&T	CODE IDENT	NOMENCLATURE OR DESCRIPTION	MATERIAL	GOVT SPEC	COML SPEC	STOCK SIZE	PROCESS SYM	FINISH NO.	ZONE
									33	LDW280-23712 -3	E		STANDOFF	SEE DWG						8B
				1						LDW280P17964-3			COVER							6C
				AS REQD			AS REQD	AS REQD		LDW280P17590 -11			TAPE							27E
			16				24			LDW280P17523 -3			CAP							19B
	1									LDW280P17460-75			BLANKET							2B
					1					LDW280P17460-69			BLANKET							24E
						1				-65										2B
										-63										5B
		1								-61										5B
										-55										5B
1										-47										24B
	1									LDW280P17460 -43			BLANKET	SEE DWG						5B
										LDW280P17460-7			BLANKET	SEE DWG						2B
										LDW280-52656-35			BLANKET ASSY							
										-33			BLANKET ASSY							
										-31			BLANKET HDW ASSY							
										-29			BLANKET INSTL							
							1			-27			BLANKET ASSY							
			1							-25			BLANKET ASSY							
			1							-23			BLANKET ASSY							
				1						-21			BLANKET HDW ASSY							
										-19			BLANKET INSTL							
							1			-17			BLANKET ASSY							
							1			-15			BLANKET ASSY							
								1		-13			BLANKET HDW ASSY							
										-11			BLANKET INSTL							
										LDW280-52656-9	E		STANDOFF INSTL							

SYM OR NO.	PROCESS SYM OR FINISH NO.	GRUMMAN SPEC OR MILITARY SPEC	SYM OR NO.	PROCESS SYM OR FINISH NO.	GRUMMAN SPEC OR MILITARY SPEC	SYM OR NO.	PROCESS SYM OR FINISH NO.	GRUMMAN SPEC OR MILITARY SPEC

I&T: IDENTIFICATION AND TRACEABILITY IN ACCORDANCE WITH NONE

GRUMMAN AIRCRAFT ENGRG CORP., BETHPAGE, L. I., NEW YORK

SIZE	CODE IDENT NO.		
B	26512	LDW280-52656	B

3

SCALE NONE

SHEET 2.00

ENG 77.2 5-64

01

NAS 9-1100

QTY PER ASSEMBLY																				
-27	-25	-23	-21	-19	-17	-15	-13	-11	-9	PART NO.	I&T	CODE IDENT	NOMENCLATURE OR DESCRIPTION	MATERIAL	GOVT SPEC	COML SPEC	STOCK SIZE	PROCESS SYM	FINISH NO.	ZONE
									AS REQD	MS20470 A3	E		RIVET							
			5				24			GW10H-1			WASHER	GRUMMAN STD						
			AS REQD				AS REQD			GT835M-8			TAPE							
			AS REQD				AS REQD			GS577S-1			STAPLES							
			AS REQD				AS REQD			GT835P-8			TAPE							
			5				24			GB10J-1			BUSHING							
				6						GW10H-3			RETAINER							
				6						GR11B-1			RETAINER	GRUMMAN STD						
				5				24		AN515-6R4			SCREW	STD PART						
				AS REQD						GT15C-3			TAPE	GRUMMAN STD						
			16				24			GS26D-1			STANDOFF							
							AS REQD			GT535B-2-1.00			TAPE							
								2		GT535L-HA-0250			TAPE HOOK							
									40	GT535G-LAS-0004	E		TAPE LOOP	GRUMMAN STD						

SYM OR NO.	PROCESS SYM OR FINISH NO.	GRUMMAN SPEC OR MILITARY SPEC	SYM OR NO.	PROCESS SYM OR FINISH NO.	GRUMMAN SPEC OR MILITARY SPEC	SYM OR NO.	PROCESS SYM OR FINISH NO.	GRUMMAN SPEC OR MILITARY SPEC

I&T: IDENTIFICATION AND TRACEABILITY IN ACCORDANCE WITH NONE

GRUMMAN AIRCRAFT ENGRG CORP., BETHPAGE, L. I., NEW YORK

SIZE	CODE IDENT NO.		
B	26512	LDW280-52656	B

SCALE NONE

SHEET 2.01

ENG 77.2 5-64

01

NAS 9-1100

-35	-33	-31	-29	PART NO.	I&T	CODE IDENT	NOMENCLATURE OR DESCRIPTION	MATERIAL	GOVT SPEC	COML SPEC	STOCK SIZE	PROCESS SYM	FINISH NO.	ZONE
		AS REQD		GT535B-2 1.00	E		TAPE	GRUMMAN STD						
		16		GS26D-1			STANDOFF							
		AS REQD		GS577S-1			STAPLES							
		AS REQD		GT835P-8			TAPE							
		AS REQD		GT835M-8			TAPE							
		5		GB10J-1			BUSHING							
		5		GW10H-1			WASHER	GRUMMAN STD						
			5	AN515-6R4			SCREW	STD PART						
		16		LDW280P17523-3			CAP	SEE DWG						19B
			5	LDW280P17575-11			RETAINER							8B
			AS REQD	LDW280P17590-11			TAPE							27B
1				LDW280P17460-55			BLANKET							5B
	1			LDW280P17460-63			BLANKET							5B
1				LDW280P17460-77			BLANKET	SEE DWG						2B
		1		LDW280-52656-35			BLANKET ASSY							
		1		LDW280-52656-33			BLANKET ASSY							
			1	LDW280-52656-31	E		BLANKET ASSY							

QTY PER ASSEMBLY

SYM OR NO.	PROCESS SYM OR FINISH NO.	GRUMMAN SPEC OR MILITARY SPEC	SYM OR NO.	PROCESS SYM OR FINISH NO.	GRUMMAN SPEC OR MILITARY SPEC	SYM OR NO.	PROCESS SYM OR FINISH NO.	GRUMMAN SPEC OR MILITARY SPEC

I & T: IDENTIFICATION AND TRACEABILITY IN ACCORDANCE WITH NONE

GRUMMAN AIRCRAFT ENGRG CORP., BETHPAGE, L. I., NEW YORK

SIZE B | CODE IDENT NO. 26512 | LDW280-52656 | B

B

SCALE NONE | SHEET 2.02

ENG 77.2 5-64

0 1

NAS 9-1100

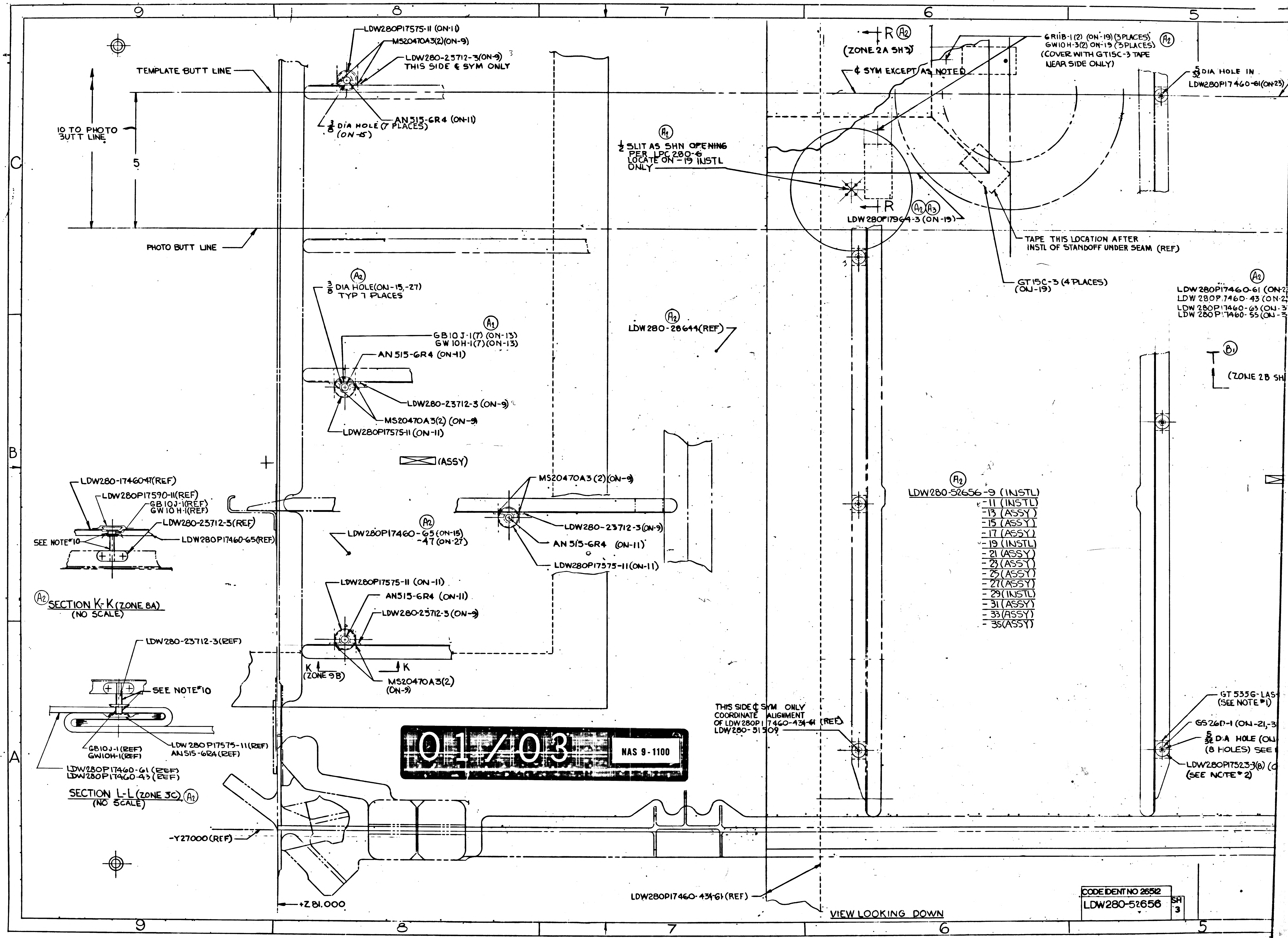
9
8
7
6
5
C
B
A
LDW280P17575-11 (ON-11)
MS20470A3(2)(ON-9)
LDW280-23712-3(ON-9)
THIS SIDE ℄ SYM ONLY
TEMPLATE BUTT LINE
AN515-6R4 (ON-11)
3/8 DIA HOLE (7 PLACES) (ON-15)
10 TO PHOTO BUTT LINE
5
PHOTO BUTT LINE
3/8 DIA HOLE(ON-15,-27) TYP 7 PLACES
GB10J-1(7) (ON-13)
GW10H-1(7)(ON-13)
AN515-6R4 (ON-11)
LDW280-23712-3 (ON-9)
MS20470A3(2) (ON-9)
LDW280P17575-11 (ON-11)
(ASSY)
LDW280-1746047(REF)
LDW280P17590-11(REF)
GB10J-1(REF)
GW10H-1(REF)
LDW280-23712-3(REF)
LDW280P17460-65(REF)
SEE NOTE 10
SECTION K-K (ZONE 8A)
(NO SCALE)
LDW280P17460-65(ON-15)
-47 (ON-27)
MS20470A3 (2) (ON-9)
LDW280-23712-3(ON-9)
AN 515-6R4 (ON-11)
LDW280P17575-11(ON-11)
LDW280P17575-11 (ON-11)
AN515-6R4 (ON-11)
LDW280-23712-3 (ON-9)
MS20470A3(2) (ON-9)
K
(ZONE 9B)
K
LDW280-23712-3(REF)
SEE NOTE 10
GB10J-1(REF)
GW10H-1(REF)
LDW 280 P17575-11(REF)
AN515-6R4(REF)
LDW280P17460-61 (REF)
LDW280P17460-43 (REF)
SECTION L-L (ZONE 3C)
(NO SCALE)
-Y27000(REF)
+Z81.000
01/03
NAS 9-1100
R
(ZONE 2A SH 3)
℄ SYM EXCEPT AS NOTED
6R11B-1 (2) (ON-19) (3 PLACES)
GW10H-3(2) ON-19 (3 PLACES)
(COVER WITH GT15C-3 TAPE NEAR SIDE ONLY)
5/32 DIA HOLE IN
LDW280P17460-61(ON-25)
1/2 SLIT AS SHN OPENING PER LPC 280-6 LOCATE ON-19 INSTL ONLY
R
LDW 280P17964-3 (ON-19)
TAPE THIS LOCATION AFTER INSTL OF STANDOFF UNDER SEAM (REF)
GT15C-3 (4 PLACES) (ON-19)
LDW280P17460-61 (ON-2
LDW 280P17460-43 (ON-2
LDW 280P17460-63 (ON-3
LDW 280P17460-55 (ON-3
LDW280-28644(REF)
(ZONE 2B SH
LDW280-52656-9 (INSTL)
-11 (INSTL)
-13 (ASSY)
-15 (ASSY)
-17 (ASSY)
-19 (INSTL)
-21 (ASSY)
-23 (ASSY)
-25 (ASSY)
-27 (ASSY)
-29 (INSTL)
-31 (ASSY)
-33 (ASSY)
-35 (ASSY)
THIS SIDE ℄ SYM ONLY
COORDINATE ALIGNMENT OF LDW280P17460-43/-61 (REF)
LDW280-51509
GT 535G-LAS
(SEE NOTE 1)
GS26D-1 (ON-21,-3
5/32 DIA HOLE (ON
(8 HOLES) SEE
LDW280P17523-3(8) (O
(SEE NOTE 2)
LDW280P17460-43/-61 (REF)
VIEW LOOKING DOWN
CODE IDENT NO 26512
LDW280-52656
SH 3

6RIIB-1(2) (ON-19)(3PLACES)
GWIOH-3(2) ON-19 (3PLACES)
(COVER WITH GT15C-3 TAPE
NEAR SIDE ONLY)
NOTED
$\frac{5}{32}$ DIA HOLE IN
LDW280P17460-61(ON-23)
±Y0.000
TAPE THIS LOCATION AFTER
INSTL OF STANDOFF UNDER SEAM (REF)
GT15C-3 (4 PLACES)
(ON-19)
LDW280P17460-61 (ON-23)
LDW 280P17460-43 (ON-25)
LDW 280P17460-63 (ON-33)
LDW 280P17460-55 (ON-35)
T (ZONE 2B SH.3) T
L (ZONE 9A)
LDW280P17575-11
(ON-19)
LDW280-23712-3
(ON9)
THIS SIDE ℄ SYM ONLY
MS20470D3(2)
(ON-9)
$\frac{3}{8}$ DIA HOLE
(ON 21)
TEMPLATE BUTT LINE
10 TO PHOTO
BUTT LINE
5
PHOTO BUTT LINE
70
30
OUTBD
LDW280P17460-43 (ON-25)(REF)
LDW280P17460-55 (ON-35)(REF)
ALUMINUM (POS)
SURFACE
LDW280P17460-77 (ON-35)
LDW280P17460-75 (ON-25)
ALUMINUM (POS) SURFACE
LDW280P17460-61 (ON-23)(REF)
LDW 280P17460-65 (ON-15)
SECTION T-T ZONE 5B SH3
INBD
MS20470A3(2)
(ON 9)
$\frac{3}{8}$ DIA HOLE
(ON-23)
SEE NOTE 5 & 6
(TYP 5 PLACES)
56
AN515-6R4
(ON-19)
LDW280-23712-3 (ON-9)
LDW280P17575-11 (ON-19)
6B10J-1 (ON-21,-31)(5)
GW 10H-1 (ON-21,-31)(5)
GT535-LAS-0004 (REF)
LDW280P17590-11(REF)
GS26D-1(REF)
LDW280P17523-3(REF)
SECTION E-E (ZONE 4A SH 3)
NO SCALE
(ASSY)
280-52656-9 (INSTL)
-11 (INSTL)
-13 (ASSY)
-15 (ASSY)
-17 (ASSY)
-19 (INSTL)
-21 (ASSY)
-23 (ASSY)
-25 (ASSY)
-27 (ASSY)
-29 (INSTL)
-31 (ASSY)
-33 (ASSY)
-35 (ASSY)
LDW280P17460-13 (REF)
LDW280-23712-3(ON-9)
LDW280P17575-11
(ON-19)
OPP. SIDE ℄ SYM ONLY
COORDINATE ALIGNMENT
OF LDW280P17460-43 & -61 TO
LDW280-51509
AN515-6R4 (ON19)
MS20470A3(2)
(ON9)
LDW280M17100(REF)
GT535G-LAS-0004(8)(ON-9)
(SEE NOTE *1)
GS26D-1 (ON-21,-31 (8) (ON-21,-31)
$\frac{5}{32}$ DIA HOLE (ON-23,-25,-33,-35)
(8 HOLES) SEE NOTE 5 & 6
LDW280P17523-3(8) (ON-21)
(SEE NOTE * 2)
E
E (ZONE 2B)
LDW280-51509(REF)
LDW280P17460-43-61(REF)
-Y 27.000 (REF)
+Z 27.000 (REF)
GS26D-1 (REF)
LDW280P17523-3(REF)
GT535G-LAS-0004(REF)
GRIIB-1(REF)
GW10H-3(REF)
$1\frac{3}{4} \pm \frac{1}{4}$ (TYP REF)
OPENING PER LPC 280-6 (REF)
LDW280-28698 (REF)
LDW280P17964 (REF)
LDW280P17460(REF)
GT15C-3
TAPE PER LPC 280-3
SEAM TAPE & INSTALL SNAPS
PER LPC 280-3
SECTION R-R
NO SCALE
(ZONE 6C SH3)
TAPE(REF)
X196.00(REF)
LDW280P17460-43(REF)
LDW280P17460-61(REF)
+Y
+Z
-Y
LDW280-52656-9
FOR ENG REF ON
NO SCALE
A2
B1
6
5
4
3
2

NOTES:

1. BOND GT535GLAS0004 TO STRUCTURE AS SHOWN WITH EPON 934 PER LSP 14-22500.
2. FASTEN LDW280P17523-3 TO GS26D-1 PER LPC 280-14
3. LDW280P17936-29 SEW TO LDW280P17460 AT 3/16 ± 1/16 FROM EDGES OF LDW280P17936-29 IN ACCORDANCE WITH FED STD # 751a & STITCH TYP 301
4. ~~TOLERANCE ON INSTALLED LOCATIONS OF BLANKET TRIM LINES IS ± ½~~
5. ALUMINIZED MYLAR PARTS SHALL HAVE EXPANDED HOLE PATTERNS THE EXPANSION RATIO IS TO BE .050 INCHS PER INCH (EXAMPLE: 10 INCHS EXPANDS TO 10.5 INCHS)
6. ALUMINIZED POLYMIDE PARTS SHALL HAVE EXPANDED HOLE PATTERNS. THE EXPANSION RATIO IS TO BE .070 INCHS PER INCH EXAMPLE: 10 INCHS EXPANDS TO 10.7 INCHS
7. FABRICATE BLANKET ASSYS PER LPC 280-1
8. THE FOLLOWING PARTS ARE INTERCHANGEABLE & MAYBE USED FOR FUTURE REPLACEMENTS LDW280P17700-17 IS INTERCHANGEABLE WITH GS26D-1
9. THE FOLLOWING PARTS ARE IDENTICAL, LDW280P17936-13 IS IDENTICAL TO GT535G-LAS-0004, LDW280P17936-29 IS IDENTICAL TO GT535L-HA-0250
10. COVER ALL EXPOSED STANDOFFS USING LDW280P17590-11 TAPE (ON-11, -19 & -29) WRAP STEMS OF ALL LDW280-23712-3 STANDOFFS WITH GT835M-8 TAPE (1 LAYER) (ON-9)

CODE IDENT NO 26512
LDW280-52656
SH 3

GRUMMAN AIRCRAFT ENGRG CORP.
SIZE J
CODE IDENT NO. 26512
LDW28
LM
MODEL OR END ITEM
SCALE FULL
3 FRAMES
FOR PHOTO REPRODUC

02/03

NAS 9-1100

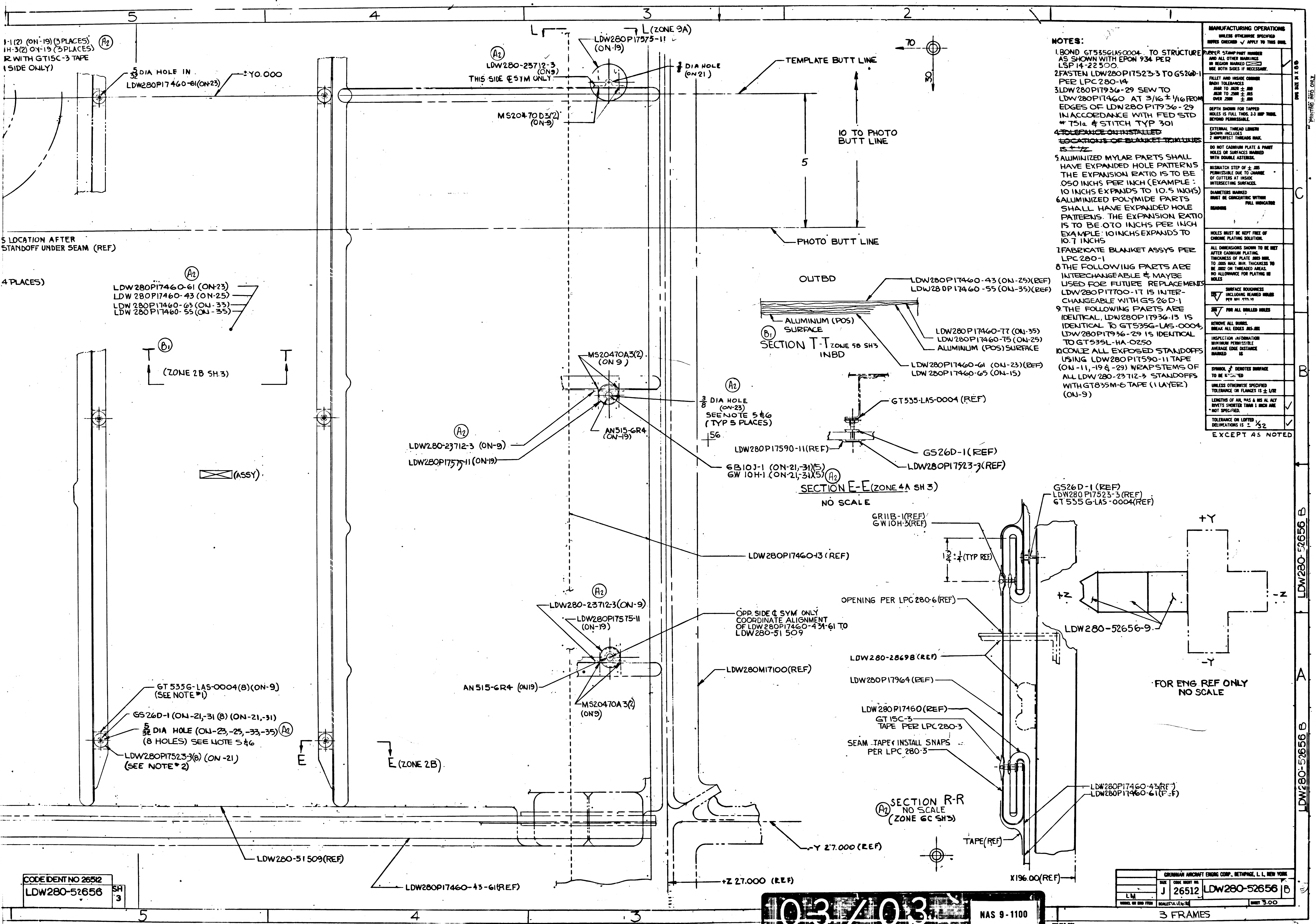
5
4
3
2
1
L
L (ZONE 9A)
1-1(2) (ON-19) (3 PLACES)
1H-3(2) ON-19 (3 PLACES)
R WITH GT15C-3 TAPE
(SIDE ONLY)
A2
5/32 DIA HOLE IN
LDW280P17460-61 (ON-23)
±Y0.000
A2
LDW280-23712-3 (ON-9)
THIS SIDE ℄ SYM ONLY
LDW280P17575-11 (ON-19)
3/8 DIA HOLE (ON 21)
MS20470D3(2) (ON-9)
TEMPLATE BUTT LINE
70
30
10 TO PHOTO BUTT LINE
5
PHOTO BUTT LINE
S LOCATION AFTER
STANDOFF UNDER SEAM (REF)
4 PLACES)
A2
LDW280P17460-61 (ON-23)
LDW 280P17460-43 (ON-25)
LDW 280P17460-63 (ON-33)
LDW 280P17460-55 (ON-35)
T
B1
T
(ZONE 2B SH.3)
(ASSY)
MS20470A3(2) (ON 9)
3/8 DIA HOLE (ON-23)
SEE NOTE 5&6
(TYP 5 PLACES)
A2
.56
AN515-6R4 (ON-19)
A2
LDW280-23712-3 (ON-9)
LDW280P17575-11 (ON-19)
GB10J-1 (ON-21,-31)(5)
GW 10H-1 (ON-21,-31)(5)
OUTBD
LDW280P17460-43 (ON-25)(REF)
LDW280P17460-55 (ON-35)(REF)
ALUMINUM (POS) SURFACE
B1
SECTION T-T ZONE 5B SH3
INBD
LDW280P17460-77 (ON-35)
LDW280P17460-75 (ON-25)
ALUMINUM (POS) SURFACE
LDW280P17460-61 (ON-23)(REF)
LDW280P17460-65 (ON-15)
GT535-LAS-0004 (REF)
LDW280P17590-11(REF)
GS26D-1 (REF)
LDW280P17523-3(REF)
A2
SECTION E-E (ZONE 4A SH 3)
NO SCALE
LDW280P17460-13 (REF)
GS26D-1 (REF)
LDW280P17523-3 (REF)
GT535G-LAS-0004(REF)
GR11B-1(REF)
GW10H-3(REF)
1 3/4 ± 1/4 (TYP REF)
+Y
+Z
-Z
-Y
LDW280-52656-9
FOR ENG REF ONLY
NO SCALE
OPENING PER LPG 280-6 (REF)
A2
LDW280-23712-3 (ON-9)
LDW280P17575-11 (ON-19)
OPP. SIDE ℄ SYM ONLY
COORDINATE ALIGNMENT
OF LDW280P17460-43-61 TO
LDW280-51509
AN515-6R4 (ON19)
MS20470A3(2) (ON9)
LDW280M17100(REF)
LDW280-28698 (REF)
LDW280P17964 (REF)
LDW280P17460 (REF)
GT15C-3
TAPE PER LPC 280-3
SEAM TAPE & INSTALL SNAPS
PER LPC 280-3
GT535G-LAS-0004(8)(ON-9)
(SEE NOTE *1)
GS26D-1 (ON-21,-31 (8) (ON-21,-31)
5/32 DIA HOLE (ON-23,-25,-33,-35)
(8 HOLES) SEE NOTE 5&6
A2
LDW280P17523-3(8) (ON-21)
(SEE NOTE *2)
E
E (ZONE 2B)
A2
SECTION R-R
NO SCALE
(ZONE 6C SH3)
LDW280P17460-43(REF)
LDW280P17460-61(REF)
TAPE(REF)
-Y 27.000 (REF)
X196.00(REF)
LDW280-51509(REF)
LDW280P17460-43-61(REF)
+Z 27.000 (REF)
C
B
A
LDW280-52656 B

NOTES:

1. BOND GT535GLAS0004 TO STRUCTURE AS SHOWN WITH EPON 934 PER LSP 14-22500.
2. FASTEN LDW280P17523-3 TO GS26D-1 PER LPC 280-14
3. LDW280P17936-29 SEW TO LDW280P17460 AT 3/16 ± 1/16 FROM EDGES OF LDW280P17936-29 IN ACCORDANCE WITH FED STD # 751a & STITCH TYP 301
4. ~~TOLERANCE ON INSTALLED LOCATIONS OF BLANKET TRIM LINES IS ± 1/2~~
5. ALUMINIZED MYLAR PARTS SHALL HAVE EXPANDED HOLE PATTERNS THE EXPANSION RATIO IS TO BE .050 INCHS PER INCH (EXAMPLE: 10 INCHS EXPANDS TO 10.5 INCHS)
6. ALUMINIZED POLYMIDE PARTS SHALL HAVE EXPANDED HOLE PATTERNS. THE EXPANSION RATIO IS TO BE .070 INCHS PER INCH EXAMPLE: 10 INCHS EXPANDS TO 10.7 INCHS
7. FABRICATE BLANKET ASSYS PER LPC 280-1
8. THE FOLLOWING PARTS ARE INTERCHANGEABLE & MAYBE USED FOR FUTURE REPLACEMENTS LDW280P17700-17 IS INTERCHANGEABLE WITH GS26D-1
9. THE FOLLOWING PARTS ARE IDENTICAL, LDW280P17936-13 IS IDENTICAL TO GT535G-LAS-0004, LDW280P17936-29 IS IDENTICAL TO GT535L-HA-0250
10. COVER ALL EXPOSED STANDOFFS USING LDW280P17590-11 TAPE (ON-11, -19 & -29) WRAP STEMS OF ALL LDW280-23712-3 STANDOFFS WITH GT835M-6 TAPE (1 LAYER) (ON-9)

MANUFACTURING OPERATIONS UNLESS OTHERWISE SPECIFIED NOTES CHECKED ✓ APPLY TO THIS DWG.	
RUBBER STAMP PART NUMBER AND ALL OTHER MARKINGS IN REGION MARKED ⊠ USE BOTH SIDES IF NECESSARY.	✓
FILLET AND INSIDE CORNER RADII TOLERANCES .016R TO .062R ± .008 .063R TO .250R ± .015 OVER .250R ± .030	
DEPTH SHOWN FOR TAPPED HOLES IS FULL THDS. 2-3 IMP THDS. BEYOND PERMISSIBLE.	
EXTERNAL THREAD LENGTH SHOWN INCLUDES 2 IMPERFECT THREADS MAX.	
DO NOT CADMIUM PLATE & PAINT HOLES OR SURFACES MARKED WITH DOUBLE ASTERISK.	
MISMATCH STEP OF ± .005 PERMISSIBLE DUE TO CHANGE OF CUTTERS AT INSIDE INTERSECTING SURFACES.	
DIAMETERS MARKED MUST BE CONCENTRIC WITHIN FULL INDICATOR READING	
HOLES MUST BE KEPT FREE OF CHROME PLATING SOLUTION.	
ALL DIMENSIONS SHOWN TO BE MET AFTER CADMIUM PLATING. THICKNESS OF PLATE .0003 MIN. TO .0005 MAX. MIN. THICKNESS TO BE .0002 ON THREADED AREAS. NO ALLOWANCE FOR PLATING IN HOLES	
125 √ SURFACE ROUGHNESS INCLUDING REAMED HOLES PER MIL-STD-10	
250 √ FOR ALL DRILLED HOLES	
REMOVE ALL BURRS. BREAK ALL EDGES .015-.031	
INSPECTION INFORMATION MINIMUM PERMISSIBLE AVERAGE EDGE DISTANCE MARKED IS	
SYMBOL ƒ DENOTES SURFACE TO BE MACHINED	
UNLESS OTHERWISE SPECIFIED TOLERANCE ON FLANGES IS ± 1/32	
LENGTHS OF AN, NAS & MS AL ALY RIVETS SHORTER THAN 1 INCH ARE NOT SPECIFIED.	✓
TOLERANCE ON LOFTED DELINEATIONS IS ± 1/32	✓

EXCEPT AS NOTED

DWG SIZE 36 X 98

PRINTING INFO ONLY
SHEET AREA = 36 x 98 24.5 SQ. FT.
SHEET AREA (1/4 OF FULL) = 6.5 SQ. FT.

CODE IDENT NO 26512
LDW280-52656 SH 3

GRUMMAN AIRCRAFT ENGRG CORP., BETHPAGE, L. I., NEW YORK
LM
SIZE J CODE IDENT NO. 26512 LDW280-52656 B
SCALE FULL SHEET 3 OO

03/03

NAS 9-1100

3 FRAMES

FOR PHOTO REPRODUCTION

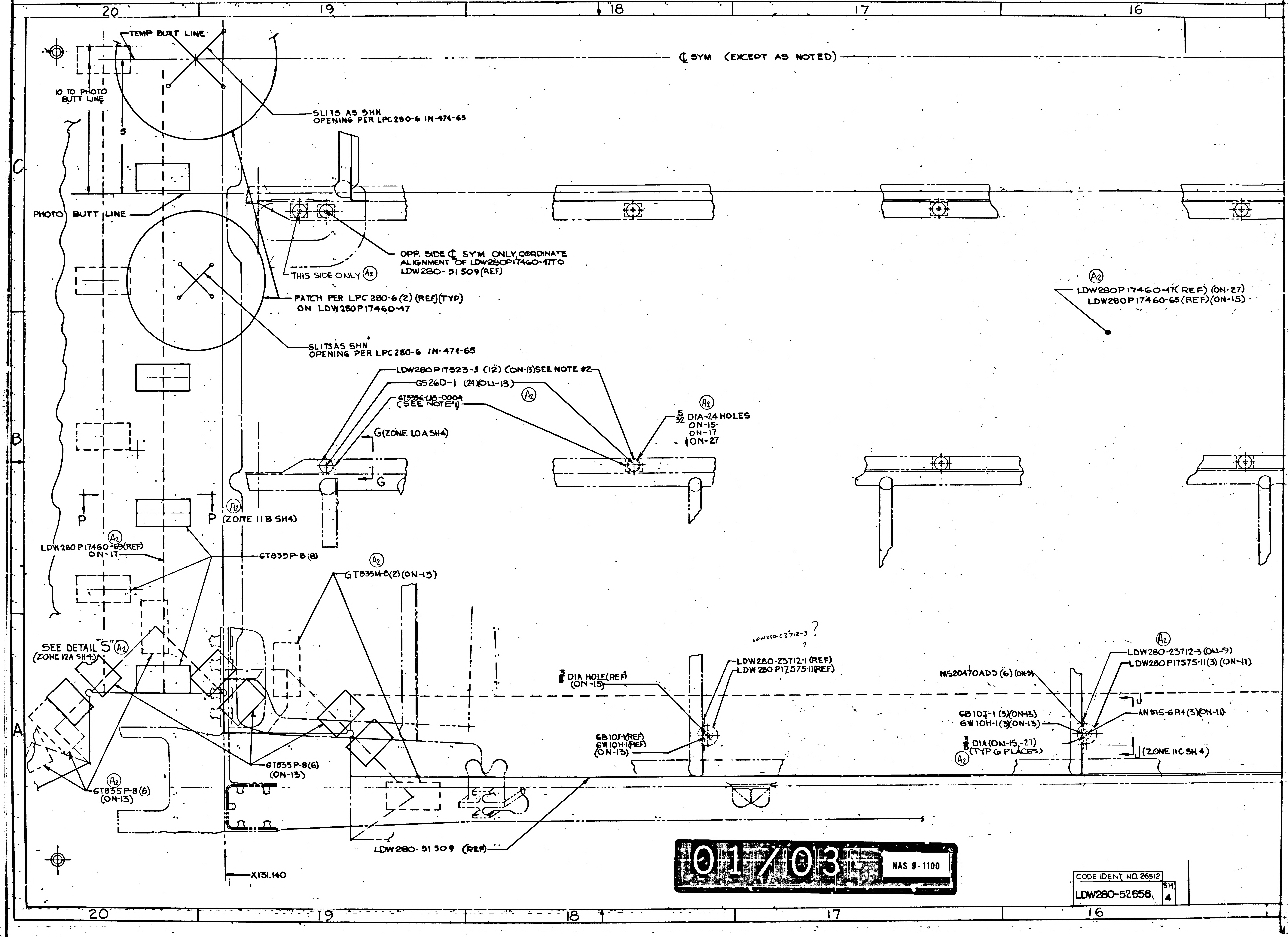
20
19
18
17
16
TEMP BUTT LINE
℄ SYM (EXCEPT AS NOTED)
10 TO PHOTO BUTT LINE
5
SLITS AS SHN
OPENING PER LPC280-6 IN-474-65
C
PHOTO BUTT LINE
OPP. SIDE ℄ SYM ONLY CORDINATE
ALIGNMENT OF LDW280P17460-47 TO
LDW280-51509 (REF)
THIS SIDE ONLY Ⓐ2
Ⓐ2
LDW280P17460-47 (REF) (ON-27)
LDW280P17460-65 (REF) (ON-15)
PATCH PER LPC 280-6 (2) (REF) (TYP)
ON LDW280P17460-47
SLITS AS SHN
OPENING PER LPC280-6 IN-474-65
LDW280P17523-3 (12) (ON-13) SEE NOTE #2
GS26D-1 (24) (ON-13)
Ⓐ2
GT5356-LL5-000A
(SEE NOTE #1)
Ⓐ2
5/32 DIA-24 HOLES
ON-15-
ON-17
& ON-27
G (ZONE 10A SH4)
G
B
P
P
Ⓐ2
(ZONE 11B SH4)
Ⓐ2
LDW280P17460-69 (REF)
ON-17
GT835P-8 (8)
Ⓐ2
GT835M-8 (2) (ON-13)
LDW280-23712-3 ?
?
SEE DETAIL "S" Ⓐ2
(ZONE 12A SH4)
3/8 DIA HOLE (REF)
(ON-15)
LDW280-23712-1 (REF)
LDW280 P17575-11 (REF)
Ⓐ2
LDW280-23712-3 (ON-9)
LDW280 P17575-11 (3) (ON-11)
MS20470AD3 (6) (ON-9)
J
AN515-6R4 (3) (ON-11)
6B10J-1 (3) (ON-13)
6W10H-1 (3) (ON-13)
A
6B10J-1 (REF)
6W10H-1 (REF)
(ON-13)
3/8 DIA (ON-15, -27)
(TYP 6 PLACES)
Ⓐ2
J (ZONE 11C SH 4)
GT835P-8 (6)
(ON-13)
Ⓐ2
GT835P-8 (6)
(ON-13)
LDW280-51509 (REF)
X131.140
20
19
18
17
16

01/03

NAS 9-1100

CODE IDENT NO. 26512

LDW280-52656 SH 4

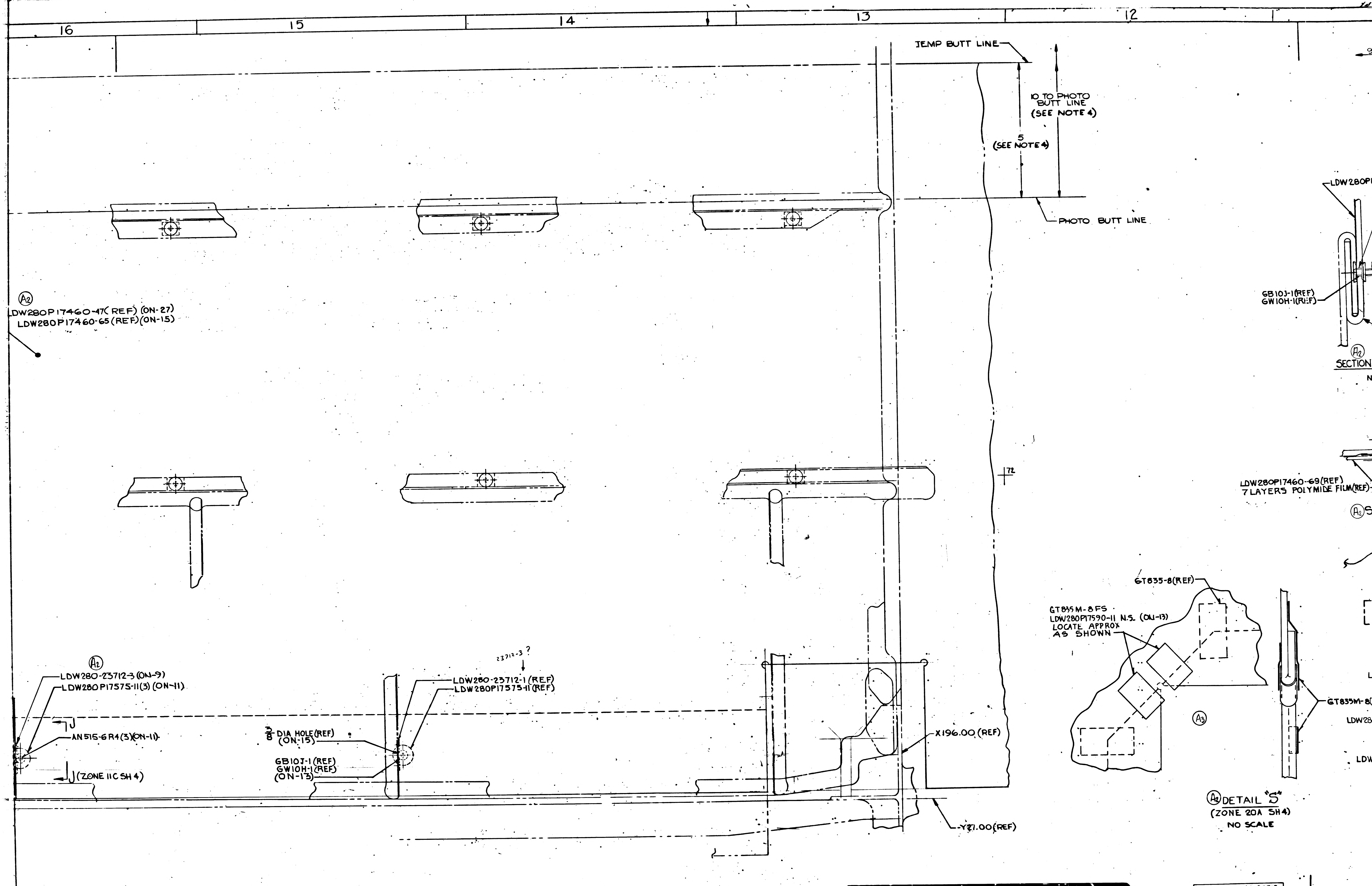
16
15
14
13
12
TEMP BUTT LINE
10 TO PHOTO BUTT LINE (SEE NOTE 4)
5 (SEE NOTE 4)
PHOTO BUTT LINE
(A2) LDW280P17460-47(REF) (ON-27)
LDW280P17460-65(REF)(ON-15)
LDW280P
GB103-1(REF)
GW10H-1(REF)
(A2) SECTION
LDW280P17460-69(REF)
7 LAYERS POLYMIDE FILM(REF)
(A2) S
GT835-8(REF)
GT835M-8FS
LDW280P17590-11 N.S. (ON-13)
LOCATE APPROX AS SHOWN
(A3)
GT835M-8
LDW28
LDW
(A2) DETAIL "S"
(ZONE 20A SH 4)
NO SCALE
(A2) LDW280-23712-3 (ON-9)
LDW280P17575-11(3) (ON-11)
J
AN515-6R4(3)(ON-11)
J (ZONE 11C SH 4)
23712-3 ?
LDW280-23712-1 (REF)
LDW280P17575-11 (REF)
3/8 DIA HOLE (REF) (ON-15)
GB103-1 (REF)
GW10H-1 (REF)
(ON-13)
X196.00 (REF)
Y37.00 (REF)
72

CODE IDENT NO. 26512

LDW280-52656 SH 4

16 15 14

02/03

NAS 9-1100

CODE IDENT NO. 26512

LDW280-52656 SH 4

12

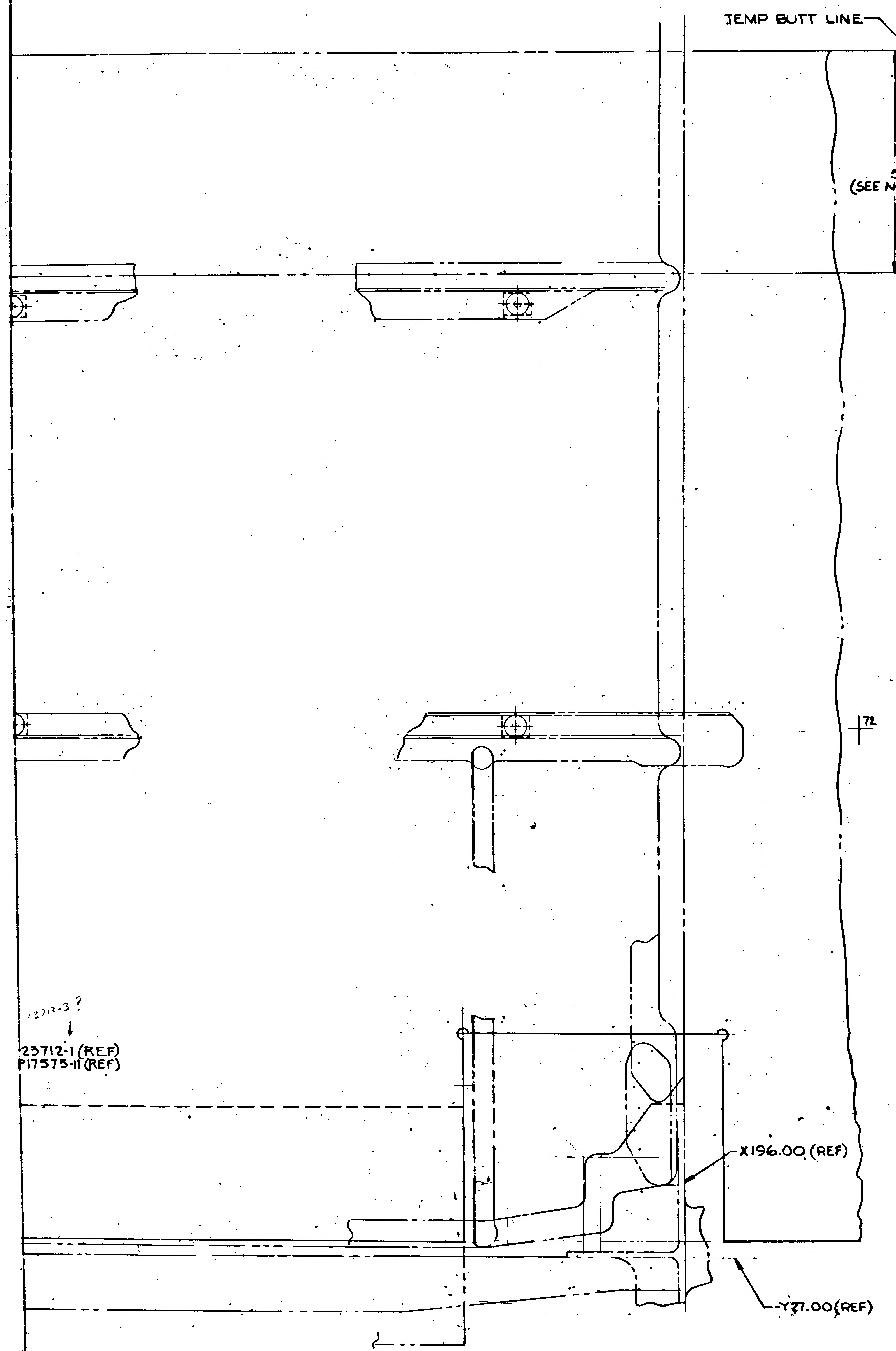
TEMP BUTT LINE
10 TO PHOTO BUTT LINE (SEE NOTE 4)
5 (SEE NOTE 4)
PHOTO BUTT LINE
72
23712-3 ?
23712-1 (REF)
P17575-11 (REF)
X196.00 (REF)
Y27.00 (REF)

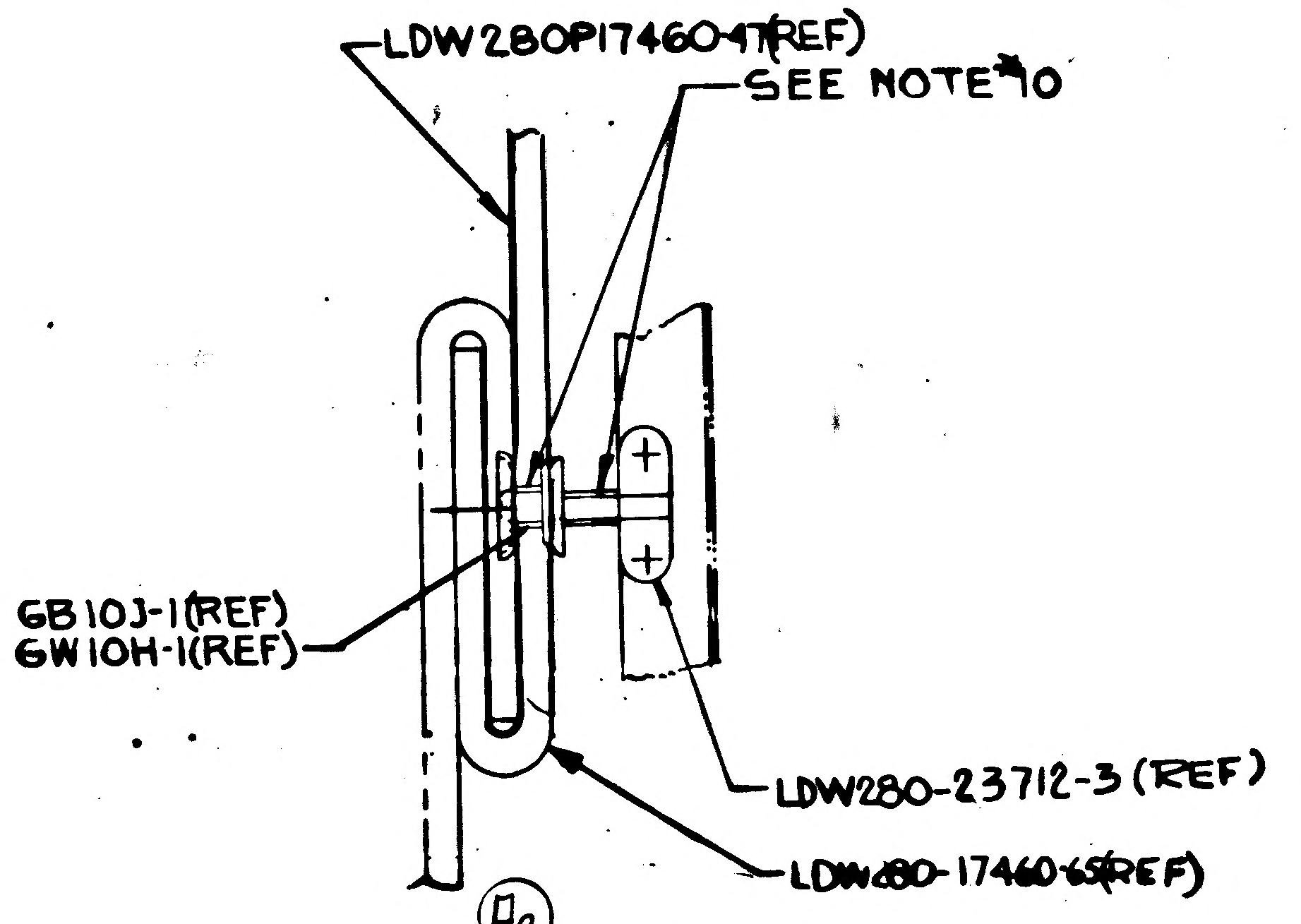
LDW280P17460-47(REF)
SEE NOTE 10
GB103-1(REF)
GW10H-1(REF)
LDW280-23712-3 (REF)
LDW280-17460-65(REF)

(A2) SECTION J-J (ZONE 16A SH4)
NO SCALE

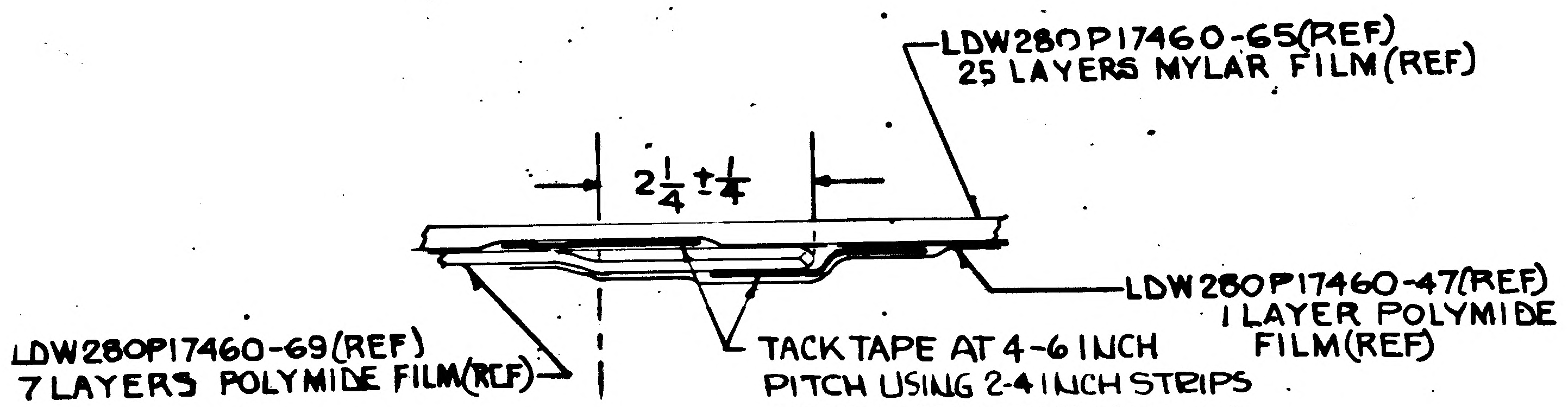
LDW280P17460-65(REF)
25 LAYERS MYLAR FILM (REF)
$2\frac{1}{4} \pm \frac{1}{4}$
LDW280P17460-47(REF)
1 LAYER POLYMIDE FILM(REF)
LDW280P17460-69 (REF)
7 LAYERS POLYMIDE FILM(REF)
TACK TAPE AT 4-6 INCH PITCH USING 2-4 INCH STRIPS OF GT835P-8 TAPE (ON-13)

(A2) SECTION P-P ZONE 19B SH4
No SCALE

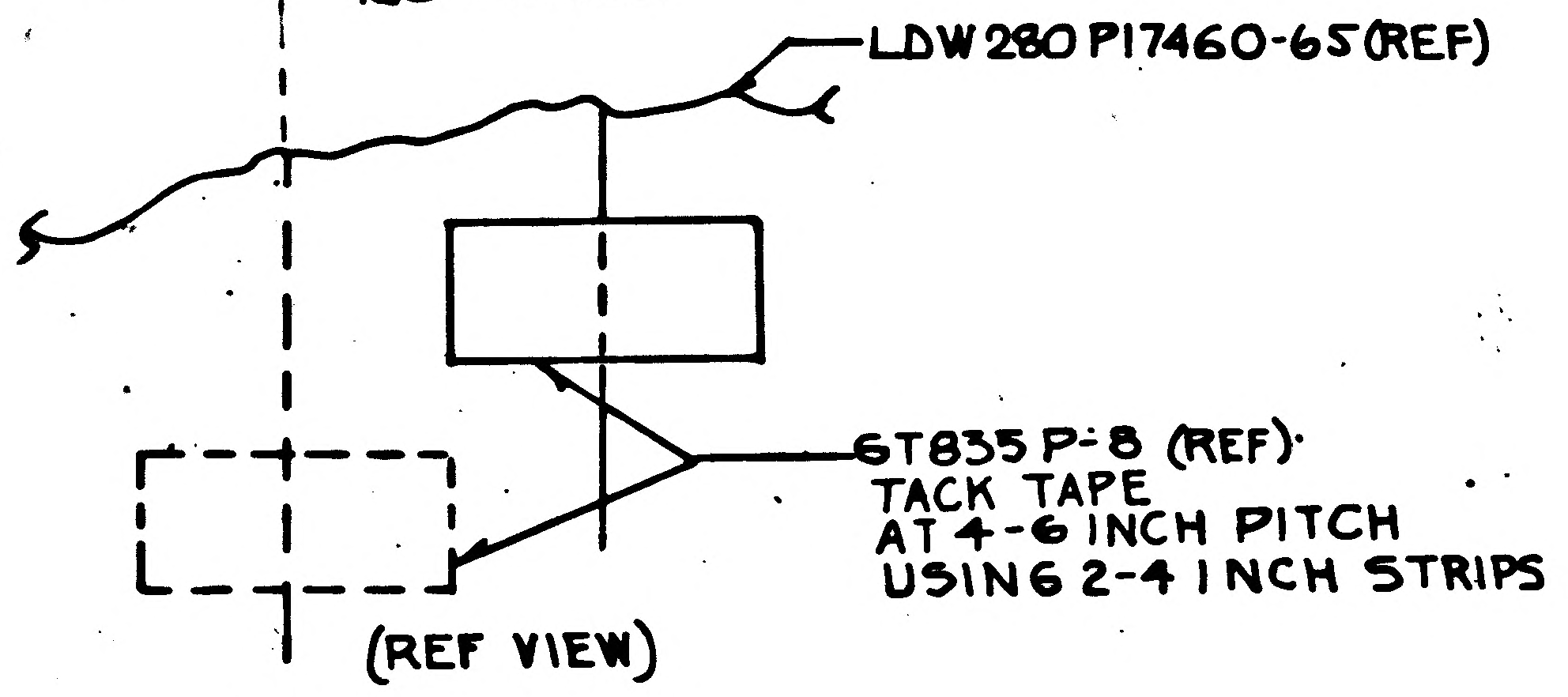
LDW280 P17460-65(REF)
GT835 P-8 (REF)
TACK TAPE
AT 4-6 INCH PITCH
USING 2-4 INCH STRIPS

(REF VIEW)

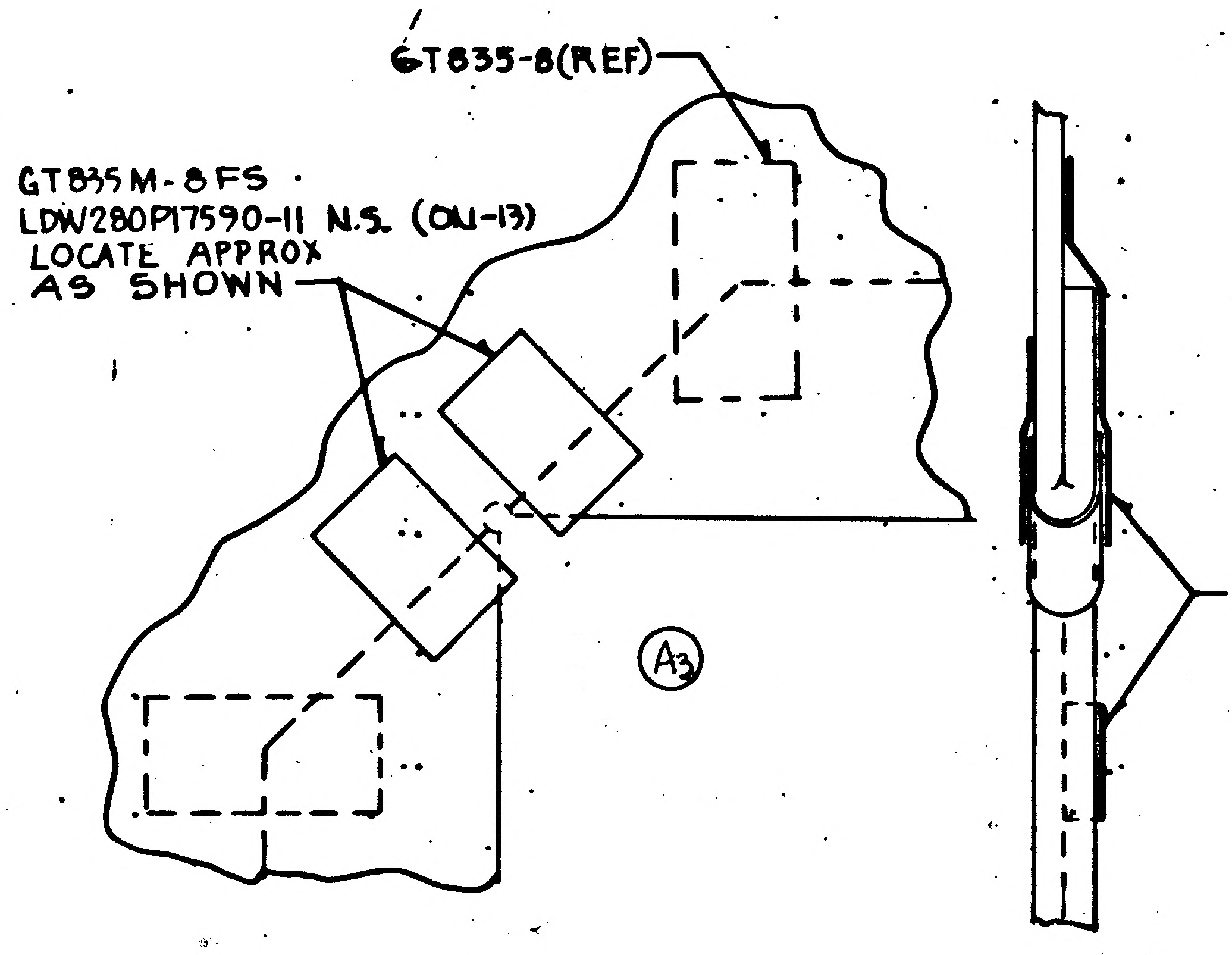
GT835-8(REF)
GT835M-8FS
LDW280P17590-11 N.S. (ON-13)
LOCATE APPROX AS SHOWN
A3
GT835M-8(REF)

(A2) DETAIL "S"
(ZONE 20A SH4)
NO SCALE

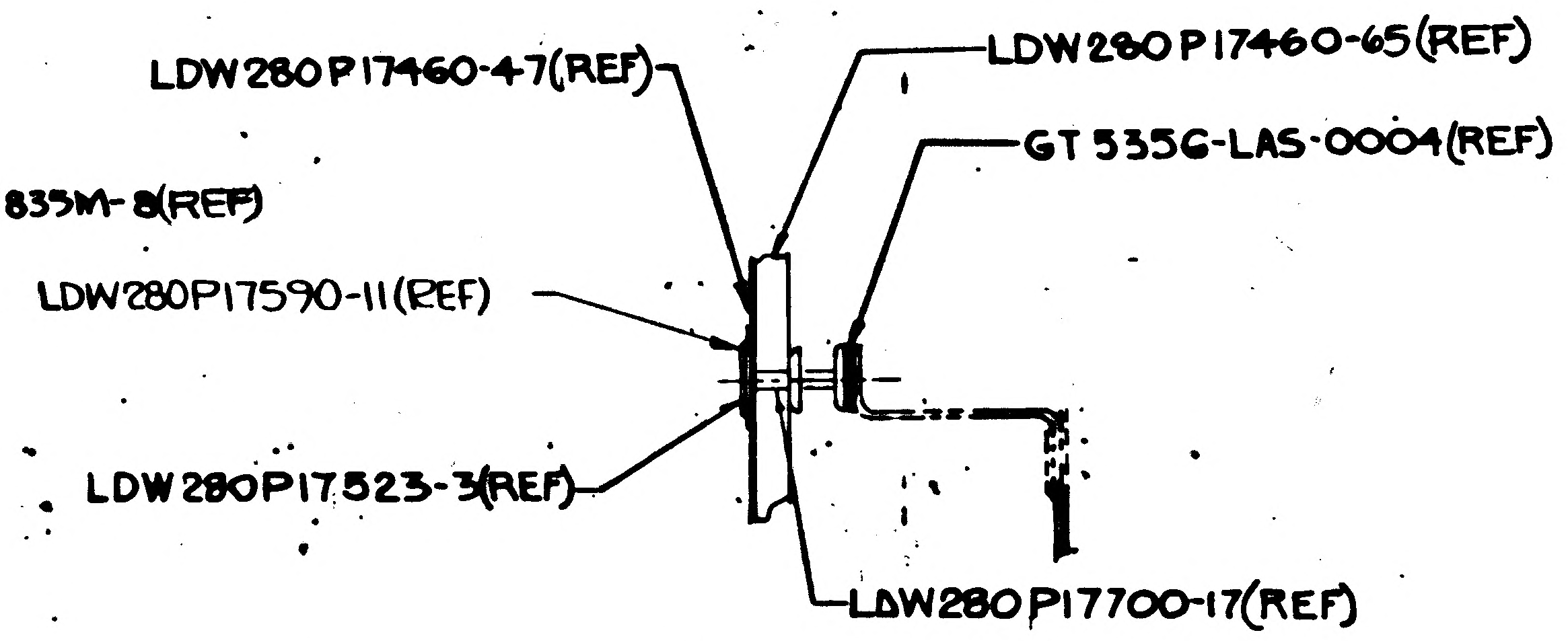
LDW280P17460-47(REF)
LDW280P17460-65(REF)
GT535G-LAS-0004(REF)
LDW280P17590-11(REF)
LDW280P17523-3(REF)
LDW280P17700-17(REF)

(A2) SECTION G-G (ZONE 19B SH4)
NO SCALE

~~MANUFACTURING OPERATIONS~~
~~UNLESS OTHERWISE SPECIFIED NOTES CHECKED ✓ APPLY TO THIS DWG.~~

~~PART NUMBER AND ALL OTHER MARKINGS IN REGION MARKED ▭ USE BOTH SIDES IF NECESSARY.~~

~~FILLET AND INSIDE CORNER RADII TOLERANCES~~
~~.020R TO .062R ± .010~~
~~.062R TO .250R ± .015~~
~~OVER .250R ± .030~~

~~DEPTH SHOWN FOR TAPPED HOLES IS FULL THDS. 2-3 IMP THDS. BEYOND PERMISSIBLE.~~

~~EXTERNAL THREAD LENGTH SHOWN INCLUDES 2 IMPERFECT THREADS MAX.~~

~~DO NOT CADMIUM PLATE & PAINT HOLES OR SURFACES MARKED WITH DOUBLE ASTERISK.~~

~~MISMATCH STEP OF ± .005 PERMISSIBLE DUE TO CHANGE OF CUTTERS AT INSIDE INTERSECTING SURFACES.~~

~~DIAMETERS MARKED MUST BE CONCENTRIC WITHIN FULL INDICATOR READING~~

~~HOLES MUST BE KEPT FREE OF CHROME PLATING SOLUTION.~~

~~ALL DIMENSIONS SHOWN TO BE MET AFTER CADMIUM PLATING. THICKNESS OF PLATE .0003 MIN. TO .0005 MAX. MIN. THICKNESS TO BE .0002 ON THREADED AREAS. NO ALLOWANCE FOR PLATING IN HOLES~~

~~125 SURFACE ROUGHNESS INCLUDING REAMED HOLES PER MIL-STD-10~~

~~250 FOR ALL DRILLED HOLES~~

~~REMOVE ALL BURRS. BREAK ALL EDGES .005-.031~~

~~INSPECTION INFORMATION MINIMUM PERMISSIBLE AVERAGE EDGE DISTANCE MARKED IS~~

~~SYMBOL ✓ DENOTES SURFACE TO BE MACHINED~~

~~UNLESS OTHERWISE SPECIFIED TOLERANCE ON FLANGES IS ± 1/32~~

~~LENGTHS OF AN, NAS & MS AL ALY RIVETS SHORTER THAN 1 INCH ARE NOT SPECIFIED.~~

~~TOLERANCE ON LOFTED DELINEATIONS IS~~

"DWG" SIZE 36 X 106
PRINTING INFO ONLY
FULL SIZE SHEET AREA (36 X 108)= 27 SQ. FT.
1/2 SIZE SHEET AREA (1/4 OF FULL)= 6.750 SQ. FT.
PRINT TRIM LINE

LDW280-52656 B
LDW280-52656 B
FDM580-52656 SH4

03/03
NAS 9-1100

CODE IDENT NO. 26512	SH
LDW280-52656	4

GRUMMAN AIRCRAFT ENGRG CORP., BETHPAGE, L. I., NEW YORK
LM
SIZE J | CODE IDENT NO. 26512 | LDW280-52656 | B
SCALE FULL / NOTED
SHEET 4.00

3FRAMES

FOR PHOTO REPRODUCTION

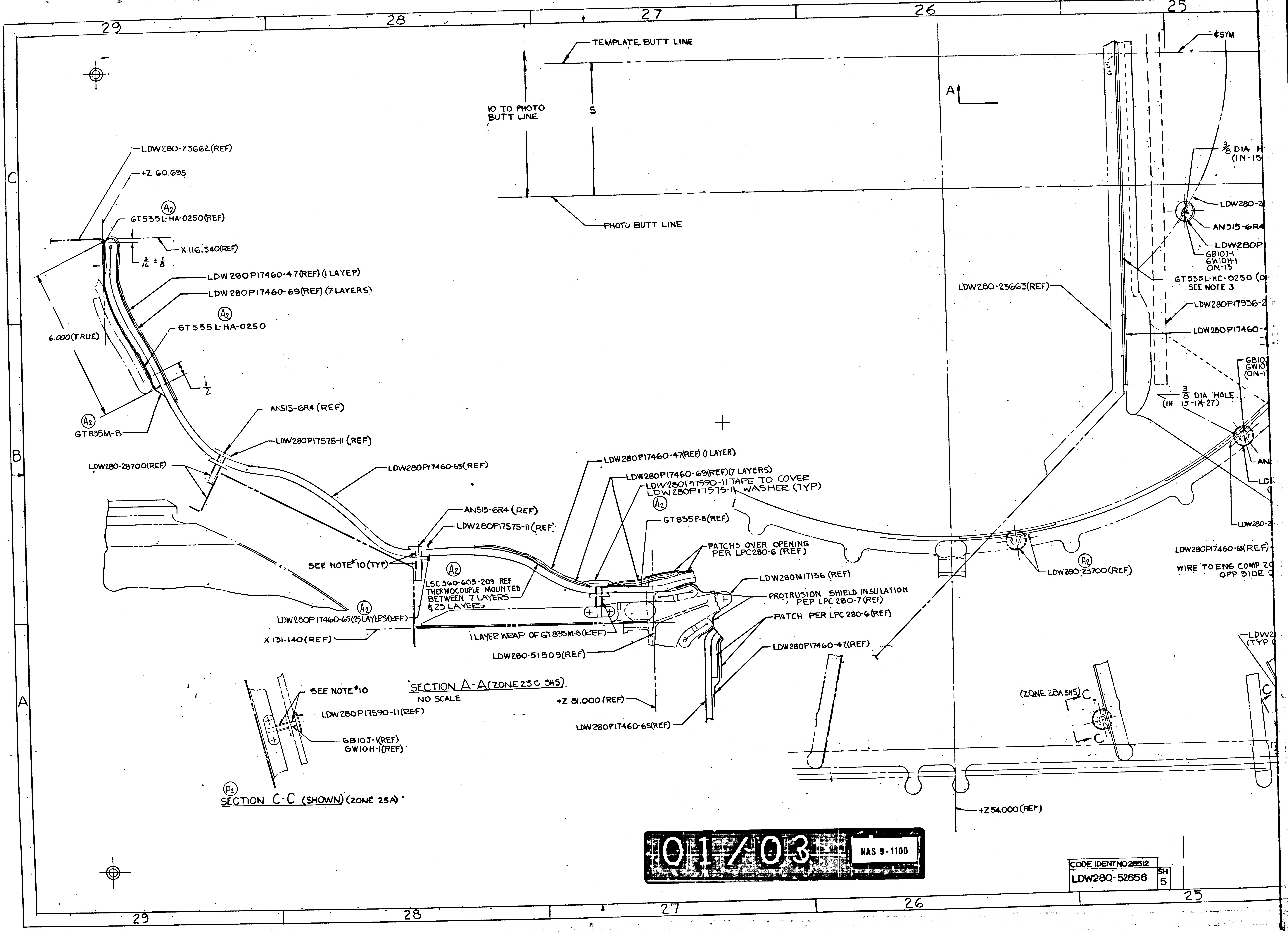

29
28
27
26
25
C
B
A
TEMPLATE BUTT LINE
10 TO PHOTO BUTT LINE
5
PHOTO BUTT LINE
¢SYM
A
LDW280-23662(REF)
+Z 60.695
A2
GT535L-HA-0250(REF)
X 116.340(REF)
3/16 ± 1/8
LDW280P17460-47(REF) (1 LAYER)
LDW280P17460-69(REF) (7 LAYERS)
GT535L-HA-0250
6.000(TRUE)
1/2
GT835M-8
AN515-6R4 (REF)
LDW280P17575-11 (REF)
LDW280-28700(REF)
LDW280P17460-65(REF)
LDW280P17460-47(REF) (1 LAYER)
LDW280P17460-69(REF)(7 LAYERS)
LDW280P17590-11 TAPE TO COVER LDW280P17575-11 WASHER (TYP)
GT835P-8(REF)
AN515-6R4 (REF)
LDW280P17575-11 (REF)
SEE NOTE #10 (TYP)
LSC 360-603-209 REF THERMOCOUPLE MOUNTED BETWEEN 7 LAYERS & 25 LAYERS
LDW280P17460-65(25 LAYERS)(REF)
X 131.140(REF)
1 LAYER WRAP OF GT835M-8(REF)
LDW280-51509(REF)
PATCHS OVER OPENING PER LPC280-6 (REF)
LDW280M17136 (REF)
PROTRUSION SHIELD INSULATION PER LPC 280-7 (REF)
PATCH PER LPC 280-6(REF)
LDW280P17460-47(REF)
+Z 81.000 (REF)
LDW280P17460-65(REF)
SECTION A-A (ZONE 23C SH5)
NO SCALE
SEE NOTE #10
LDW280P17590-11(REF)
GB10J-1(REF)
GW10H-1(REF)
SECTION C-C (SHOWN) (ZONE 25A)
LDW280-23663(REF)
3/8 DIA H (IN-15
LDW280-2
AN515-6R4
LDW280P
GB10J-1
GW10H-1
ON-13
GT535L-HC-0250 (O
SEE NOTE 3
LDW280P17936-2
LDW280P17460-
GB10
GW10
(ON-1
3/8 DIA HOLE (IN -15-17-27)
AN
LD
LDW280-2
LDW280P17460-65(REF)
WIRE TO ENG COMP ZO OPP SIDE O
LDW280-23700(REF)
LDW2 (TYP
(ZONE 28A SH5) C
C
C
+Z 54.000(REF)
CODE IDENT NO 28512
LDW280-52656
SH 5

01/03

NAS 9-1100

26
25
24
23
22
21
MS20470A3(2)(ON-9) (THIS SIDE ¢ SYM ONLY)
LDW280P17575-11(ON-11)
LDW280-23712-3(ON-9)
THIS SIDE ¢ SYM ONLY
TEMPLATE BUTT LINE
70
30
¢SYM
±Y0.000
A
GB10J-1 GW10H-1 (ON-13)
Ⓐ2
LSC360-603-209 THERMO COUPLE(REF) OPP SIDE ONLY
A (ZONE 28A SH 5)
AN515-6R4(ON-11)
3/8 DIA HOLE (ON-15-17-27) THIS SIDE ¢ SYM ONLY
10 TO PHOTO BUTT LINE
5
PHOTO BUTT LINE
3/8 DIA HOLE (IN-15-17-27)
GB10J-1 GW10H-1 ON-13
3/8 DIA HOLE (IN-15-17-27)
LDW280-28700 (REF)
AN515-6R4 (ON-11)
LDW280P17575-11 (ON-11)
GB10J-1 GW10H-1 ON-13
AN515-6R4 (ON-11)
LDW280P17575-11 (ON-11)
LDW280-28700 (REF)
LDW280-23663(REF)
GT535L-HC-0250 (ON-11) SEE NOTE 3
LDW280P17936-29(REF)
LDW280P17460-47(ON-27) -65(ON-15)(REF) -69(ON-17)
LDW280P17575-11 (ON-11)
N
ZONE 21A SH 5 Ⓐ2
AN515-6R4 (ON-11)
LDW280-23712-3 (ON-9)
3/8 DIA (IN-15-17-27)
GB10J-1 GW10H-1 (ON-13) (TYP 11 PLCS)
36
MS20470A3(2) (ON-9)
GB10J-1 GW10H-1 (ON-13)
3/8 DIA HOLE (IN-15-17-27)
GT15C-1(5) TAPE TO LDW280P17460-65 PLACES
N
Ⓐ2
1/2 SLITS AS SHOWN IN-15 OPP SIDE ONLY
Ⓐ2
PATCH PER LPC280-6 OPP SIDE ONLY
AN515-6R4 (ON-11)
LDW280P17575-11(ON-11) (TYP 6 PLACES)
LDW280-28700 (REF)
LDW280-51509(REF)
LDW280P17460-65(REF)
WIRE TO ENG COMP ZONE BOX (REF) OPP SIDE ONLY
Ⓐ2
LDW280-23700(REF)
ATION
F)
B
Ⓐ2
GB10J-1 GW10H-1 (ON-13)
MS20470A3(2)(ON9)
LDW280P17575-11(ON-11)
AN515-6R4(ON-9)
3/8 DIA HOLE (IN-15-17-27)
LDW280-23712-1(ON-9)
B
(ZONE 22A SH 5)
Ⓐ2
LDW280-23712-3(3)(ON-9) (TYP (2 PLACES)
MS20470A3(6) (ON-9)
(ZONE 28A SH5)
C
C
C
C
(ZONE 28A SH 5)
LDW280P17460-47,-65&69(REF)
LDW280-51509(REF)
-Y27.000
+Z54.000(REF)
+281.000
LDW280-51509(REF)
LDW280-23712-3(REF)
LDW280P17460-65(REF)
LDW280P17460-69(REF)
LDW280P17460-47(REF)
LDW280-51509(REF)
SEE NOTE #10
GB10J-1(REF) GW10H-1(REF)
LDW280P17575-11(REF)
LDW280P52664(REF)
Ⓐ2
SECTION B-B (ZONE 24A SH 5)
NO SCALE
-27
-17
-15
WIRE
PATCH (REF)
Ⓐ2
SECTION N-N ZONE 24B SH 5
NO SCALE

02/03 NAS 9-1100

CODE IDENT NO 26512
LDW280-52656
SH 5

GRUMMAN AIRCRAFT EN
SIZE J
CODE IDENT NO 26512
LM
MODEL OR END ITEM
SCALE FULL
NOTE

FOR PHOTO RE

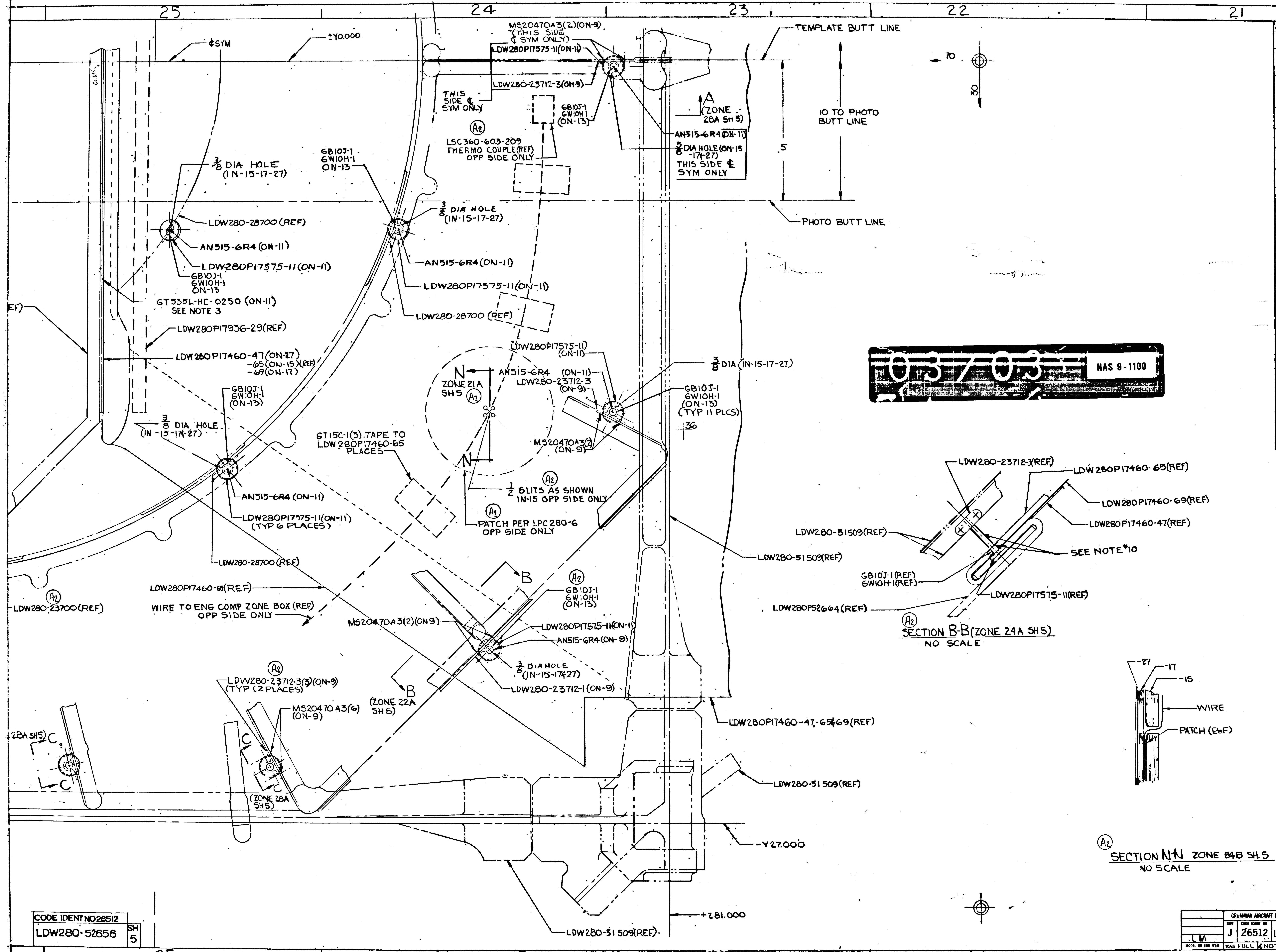

25
24
23
22
21
¢SYM
±Y0.000
MS20470A3(2)(ON-9)
(THIS SIDE ¢ SYM ONLY)
LDW280P17575-11(ON-11)
LDW280-23712-3(ON-9)
TEMPLATE BUTT LINE
THIS SIDE ¢ SYM ONLY
A2
LSC360-603-209
THERMO COUPLE(REF)
OPP SIDE ONLY
GB10J-1
GW10H-1
(ON-13)
A
(ZONE 28A SH 5)
AN515-6R4(ON-11)
3/8 DIA HOLE (ON-15-17-27)
THIS SIDE ¢ SYM ONLY
10 TO PHOTO BUTT LINE
5
70
30
3/8 DIA HOLE
(IN-15-17-27)
GB10J-1
GW10H-1
ON-13
3/8 DIA HOLE
(IN-15-17-27)
LDW280-28700 (REF)
AN515-6R4 (ON-11)
LDW280P17575-11(ON-11)
GB10J-1
GW10H-1
ON-13
PHOTO BUTT LINE
AN515-6R4 (ON-11)
LDW280P17575-11(ON-11)
LDW280-28700 (REF)
GT535L-HC-0250 (ON-11)
SEE NOTE 3
LDW280P17936-29(REF)
LDW280P17460-47(ON-27)
-65(ON-15)(REF)
-69(ON-17)
(REF)
LDW280P17575-11
(ON-11)
N
ZONE 21A SH5
A2
AN515-6R4 (ON-11)
LDW280-23712-3
(ON-9)
3/8 DIA (IN-15-17-27)
GB10J-1
GW10H-1
(ON-13)
(TYP 11 PLCS)
36
3/8 DIA HOLE
(IN-15-17-27)
GB10J-1
GW10H-1
(ON-13)
GT15C-1(3) TAPE TO
LDW280P17460-65
PLACES
N
MS20470A3(2)
(ON-9)
A2
1/2 SLITS AS SHOWN
IN-15 OPP SIDE ONLY
A2
PATCH PER LPC 280-6
OPP SIDE ONLY
AN515-6R4 (ON-11)
LDW280P17575-11(ON-11)
(TYP 6 PLACES)
LDW280-28700(REF)
LDW280-51509(REF)
LDW280-23712-3(REF)
LDW280P17460-65(REF)
LDW280P17460-69(REF)
LDW280P17460-47(REF)
LDW280-51509(REF)
SEE NOTE*10
GB10J-1(REF)
GW10H-1(REF)
LDW280P17575-11(REF)
LDW280P52664(REF)
A2
SECTION B-B (ZONE 24A SH 5)
NO SCALE
B
A2
GB10J-1
GW10H-1
(ON-13)
LDW280P17460-65(REF)
A2
LDW280-23700(REF)
WIRE TO ENG COMP ZONE BOX (REF)
OPP SIDE ONLY
MS20470A3(2)(ON9)
LDW280P17575-11(ON-11)
AN515-6R4(ON-9)
3/8 DIA HOLE
(IN-15-17-27)
LDW280-23712-1(ON-9)
A2
LDW280-23712-3(3)(ON-9)
(TYP (2 PLACES)
MS20470A3(6)
(ON-9)
B
(ZONE 22A SH 5)
LDW280P17460-47,-65&69(REF)
28A SH5) C
C
C
C
(ZONE 28A SH5)
LDW280-51509(REF)
-Y27.000
-27
-17
-15
WIRE
PATCH (REF)
A2
SECTION N-N ZONE 24B SH.5
NO SCALE
+281.000
LDW280-51509(REF)
C
B
A
LDW280-52656 B
LDW280-52656 B

03703 NAS 9-1100

MANUFACTURING OPERATIONS UNLESS OTHERWISE SPECIFIED NOTES CHECKED ✓ APPLY TO THE DWG.	
PART NUMBER AND ALL OTHER MARKINGS IN REGION MARKED ▭ USE BOTH SIDES IF NECESSARY.	
FILLET AND INSIDE CORNER RADII TOLERANCES .016R TO .062R ± .010 .063R TO .250R ± .015 OVER .250R ± .030	
DEPTH SHOWN FOR TAPPED HOLES IS FULL THDS. 2-3 IMP THDS. BEYOND PERMISSIBLE.	
EXTERNAL THREAD LENGTH SHOWN INCLUDES 2 IMPERFECT THREADS MAX.	
DO NOT CADMIUM PLATE & PAINT HOLES OR SURFACES MARKED WITH DOUBLE ASTERISK.	
MISMATCH STEP OF ± .005 PERMISSIBLE DUE TO CHANGE OF CUTTERS AT INSIDE INTERSECTING SURFACES.	
DIAMETERS MARKED MUST BE CONCENTRIC WITHIN FULL INDICATOR READING	
HOLES MUST BE KEPT FREE OF CHROME PLATING SOLUTION.	
ALL DIMENSIONS SHOWN TO BE MET AFTER CADMIUM PLATING. THICKNESS OF PLATE .0003 MIN. TO .0005 MAX. MIN. THICKNESS TO BE .0002 ON THREADED AREAS. NO ALLOWANCE FOR PLATING IN HOLES	
125 √ SURFACE ROUGHNESS INCLUDING REAMED HOLES PER MIL-STD-10	
250 √ FOR ALL DRILLED HOLES	
REMOVE ALL BURRS. BREAK ALL EDGES .015-.031	
INSPECTION INFORMATION MINIMUM PERMISSIBLE AVERAGE EDGE DISTANCE MARKED IS	
SYMBOL √ DENOTES SURFACE TO BE MACHINED	
UNLESS OTHERWISE SPECIFIED TOLERANCE ON FLANGES IS ± 1/32	
LENGTHS OF AN, NAS & MS AL ALY RIVETS SHORTER THAN 1 INCH ARE NOT SPECIFIED.	
TOLERANCE ON LOFTED DELINEATIONS IS	

DWG SIZE 34 X 88

PRINTING INFO ONLY
SIZE SHEET AREA 36 x 97 = 24.5 SQ. FT.

CODE IDENT NO 26512
LDW280-52656 SH 5

GRUMMAN AIRCRAFT ENGRG CORP., BETHPAGE, L. I., NEW YORK

MODEL OR END ITEM	SIZE	CODE IDENT NO.		
LM	J	26512	LDW280-52656	B
	SCALE FULL & NOTED		SHEET 5.00	

3 FRAMES

FOR PHOTO REPRODUCTION

01

NAS 9-1100

FITH

ENG 32.2 REV 3-65

GRUMMAN AIRCRAFT ENGINEERING CORP.
CODE IDENT NO. 26512
ENGINEERING ORDER

DWG. NO. LDW280-52656
EO NO. C1
CONTROL INFO NO. LDW280A7354

ADD -37: STANDOFF INSTL.(SAME AS -9 EXCEPT AS SHOWN) N/A LDW280-52509 EFF LM-2/32)
(1 REQD)
ADD -39: BLKT. INSTL (SAME AS -19 EXCEPT AS SHOWN) N/A LDW280-52553 EFF LM-2/32,
ADD-41 BLKT INSTL (SAME AS -11 EXCEPT AS SHOWN) N/A LDW280-52553 EFF LM-2/32) (1 REQD)
(1 REQD).
IN N/B: FOR-9 REMOVE N/A LDW280-52509 EFF LM-2/32); FOR-11 & -19 REMOVE N/A LDW280-52553 EFF LM-2

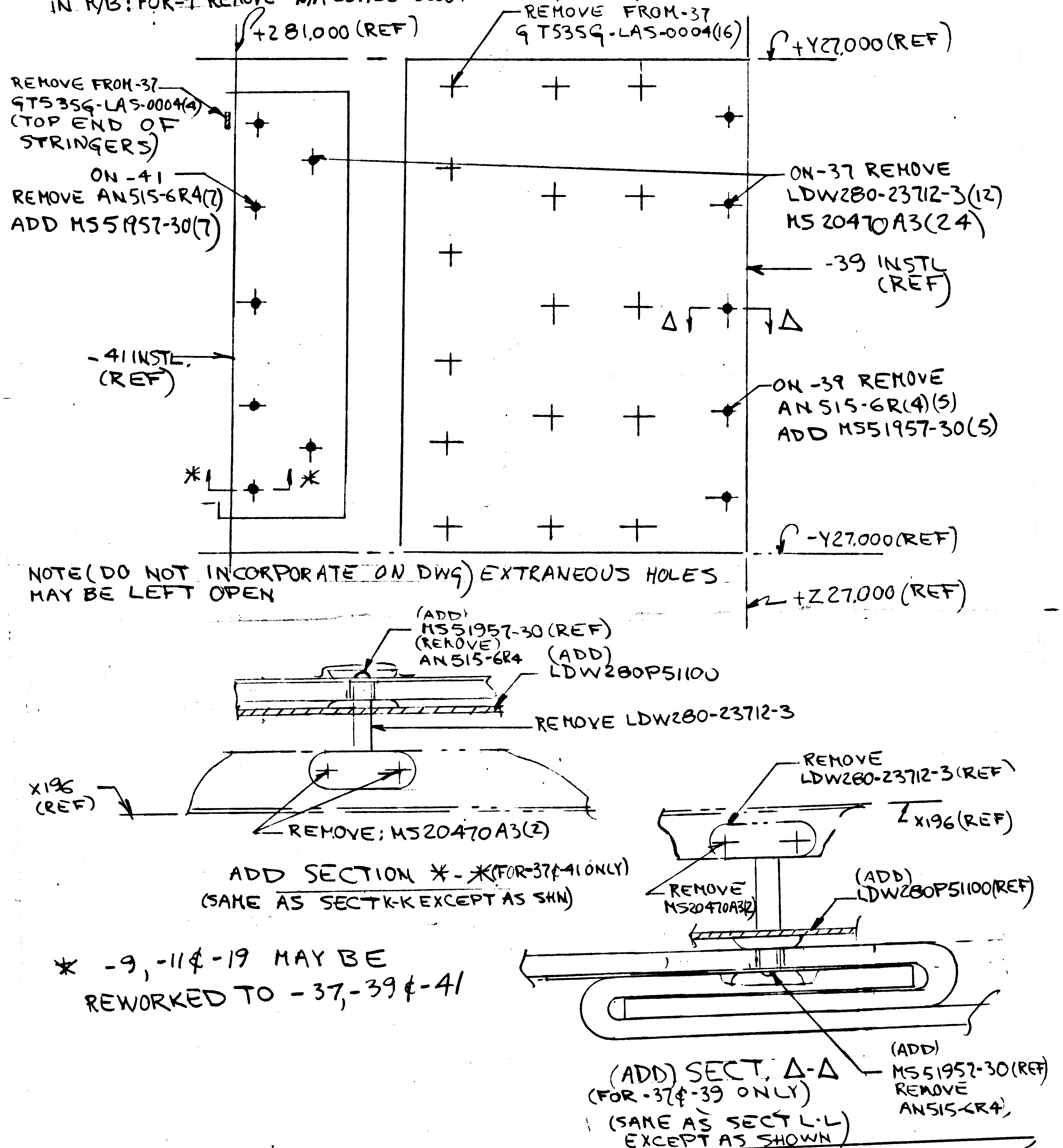
+281,000 (REF)
REMOVE FROM-37
GT535G-LAS-0004(16)
+Y27,000 (REF)
REMOVE FROM-37
GT535G-LAS-0004(4)
(TOP END OF
STRINGERS)
ON -41
REMOVE AN515-6R4(7)
ADD MS51957-30(7)
ON-37 REMOVE
LDW280-23712-3(12)
MS20470A3(24)
-39 INSTL
(REF)
Δ
Δ
-41 INSTL.
(REF)
ON -39 REMOVE
AN515-6R(4)(5)
ADD MS51957-30(5)
*
*
-Y27,000 (REF)
+Z27,000 (REF)
(ADD)
MS51957-30 (REF)
(REMOVE)
AN515-6R4
(ADD)
LDW280P5100
REMOVE LDW280-23712-3
X196
(REF)
REMOVE: MS20470A3(2)
REMOVE
LDW280-23712-3 (REF)
X196 (REF)
REMOVE
MS20470A3(2)
(ADD)
LDW280P5100(REF)
(ADD)
MS51957-30(REF)
REMOVE
AN515-6R4,

NOTE (DO NOT INCORPORATE ON DWG) EXTRANEOUS HOLES MAY BE LEFT OPEN

ADD SECTION *-* (FOR-37 & -41 ONLY)
(SAME AS SECT K-K EXCEPT AS SHN)

* -9, -11 & -19 MAY BE
REWORKED TO -37, -39 & -41

(ADD) SECT. Δ-Δ
(FOR -37 & -39 ONLY)
(SAME AS SECT L-L
EXCEPT AS SHOWN)

DETAIL SPEC REQ		CL II ENGRG CHG		CL I ENGRG CHG	✓	LCD-1244						
REASON FOR EO TO PROVIDE FOR FITH SHIELD				DESCRIPTION OF EO ADDED: -37 INSTL (N/A LDW280-52509 EFF LM-2/32)(1 REQD); -39 & -41 INSTLS (1 EA/REQD) N/A LDW280-52553 EFF LM-2(32). SECTS *-* & Δ-Δ. REMOVED N/A LDW280-52509 EFF LM-2 FROM-9 & N/A LDW280-52553 EFF. LM-2 FROM -11 & -19.								GAEC EO RELEASE 6/29/
EFFECTIVITY				DRAWING CHANGE REQD		DISPOSITION OF PARTS		APPROVED BY				
MODEL	PROCURING ACTIVITY NO.	GAEC UNIT NO.	SUB CONTR UNIT NO.	REVISE DWG ✓	RECORD EO	REWORK ✓*	SCRAP	DATE 6/12/67	GROUP LEADER 6/12/67	STRESS GROUP 6/13/67	PROJ ENGRG 6/15/67	~~GOVT~~ 6/19/67
LM		LM-2(32)						5	VDI	SUPPORT	RELIAB. GROUP	LIAISON ENGRG
PRIORITY C		DRAWING TITLE STANDOFF INSTL DESCENT STAGE~FWD TH.						DRAWING NO. LDW280-52656				EO NO. C1

ISSUED BY STEA/STRAKOSCH X1156 SECTION VDI GROUP NO. 335 PL 25

B

ENG 32.2 REV 3-65

FITH

GRUMMAN AIRCRAFT ENGINEERING CORP.
CODE IDENT NO. 26512
ENGINEERING ORDER

DWG. NO. LDW280-52656 | EO NO. C2
CONTROL INFO NO. LDW280A 7868

IN F/D, B/M & MOD/BLK: REMOVE -19 & -29 BLKT INSTL

IN F/D & B/M REMOVE THE FOLLOWING FROM -9

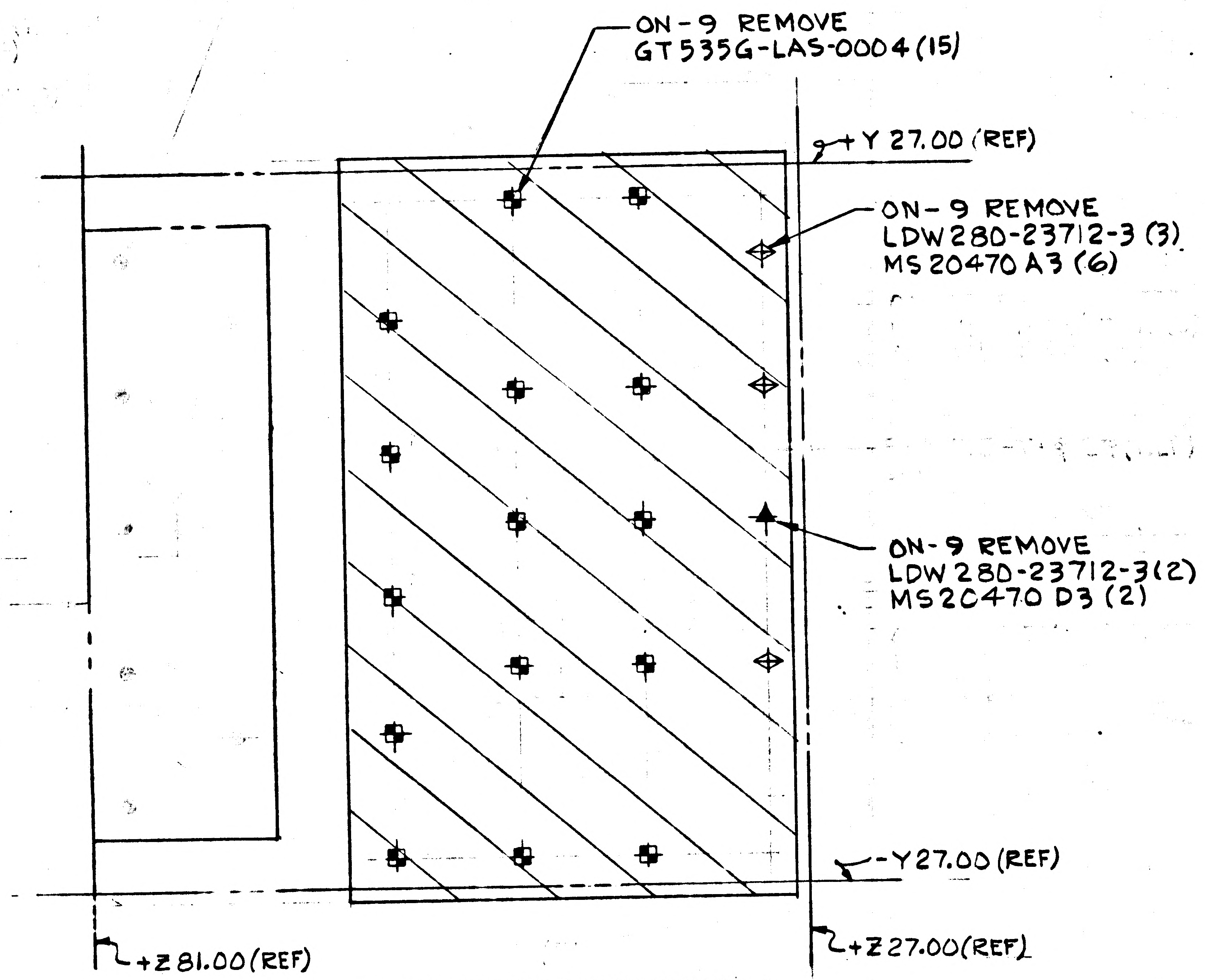
ON-9 REMOVE
GT535G-LAS-0004 (15)
+Y 27.00 (REF)
ON-9 REMOVE
LDW280-23712-3 (3)
MS20470 A3 (6)
ON-9 REMOVE
LDW280-23712-3(2)
MS20470 D3 (2)
-Y27.00 (REF)
+Z81.00(REF)
+Z27.00(REF)

VIEW LOOKING DOWN
AT+Z UPPER DECK

EXTRANEOUS HOLES MAY BE LEFT OPEN

DETAIL SPEC REQ ☐ | CL II ENGRG CHG ☐ | CL I ENGRG CHG ☑ | LCD 1244 | 5

REASON FOR EO: TO PROVIDE FOR FITH SHIELD

DESCRIPTION OF EO: REMOVED -19 & -29. REMOVED FROM -9 LDW280-23712-3(5) MS20470A3(6). MS20470D3(2) & GT535G-LAS-0004(15)

Ⓡ GAEC EO RELEASE: JK 7/31/67

MODEL	PROCURING ACTIVITY NO.	GAEC UNIT NO.	SUB CONTR UNIT NO.
LM		LM-3(33) THRU	
		LM-15(45)	

DRAWING CHANGE REQD: REVISE DWG ✓ | RECORD EO
DISPOSITION OF PARTS: REWORK | SCRAP ✓

	VDI	SUPPORT	RELIAB. GROUP	GROUP LEADER	STRESS GROUP	LIAISON ENGRG	PROJ ENGRG	GOVT
APPROVED BY	GAP			JAAS	WJH		JWB	
DATE	7/28/67			7/28/67	7/29/67		7/28/67	

PRIORITY: C
DRAWING TITLE: STANDOFF INSTL DESCENT STAGE ~ FWD THERMAL
DRAWING NO.: LDW280-52656
EO NO.: C2

7/28
ISSUED BY THOMAS / J. STRAKOSCH X1156 SECTION VDI GROUP NO. 335 PL 25

01
NAS 9-1100

ENG 32.1 REV 3-65

GRUMMAN AIRCRAFT ENGINEERING CORP.
CODE IDENT NO. 26512
ENGINEERING ORDER *

DWG. NO. LDW280-52656
EO NO. C3
CONTROL INFO NO. LDW280A8141

FOR -41 BLANKET INSTL ADD LDW280P18339-1 BLANKET ASSY
FOR -39 " " ADD LDW280P18339-3 BLANKET ASSY

FOR -39 & 41 ADD LDW280P18339-23 TAPE ASSY AS REQ

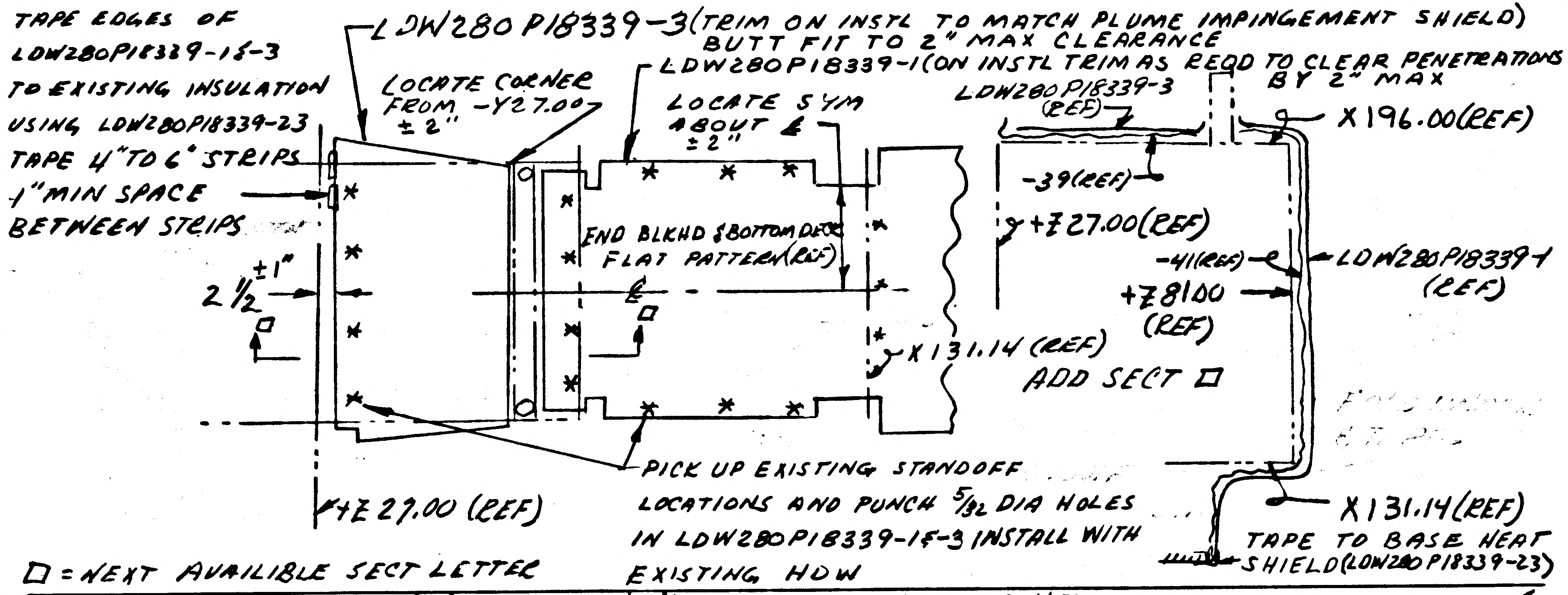

TAPE EDGES OF LDW280P18339-1 & -3 TO EXISTING INSULATION USING LDW280P18339-23 TAPE 4" TO 6" STRIPS 1" MIN SPACE BETWEEN STRIPS
LDW280P18339-3 (TRIM ON INSTL TO MATCH PLUME IMPINGEMENT SHIELD) BUTT FIT TO 2" MAX CLEARANCE
LDW280P18339-1 (ON INSTL TRIM AS REQD TO CLEAR PENETRATIONS BY 2" MAX
LOCATE CORNER FROM -Y27.00 ± 2"
LOCATE SYM ABOUT ℄ ± 2"
LDW280P18339-3 (REF)
X196.00 (REF)
-39 (REF)
+Z27.00 (REF)
END BLKHD & BOTTOM DECK FLAT PATTERN (REF)
-41 (REF)
LDW280P18339-1 (REF)
+Z81.00 (REF)
2 1/2 ± 1"
℄
X131.14 (REF)
ADD SECT □
+Z27.00 (REF)
PICK UP EXISTING STANDOFF LOCATIONS AND PUNCH 5/32 DIA HOLES IN LDW280P18339-1 & -3 INSTALL WITH EXISTING HDW
X131.14 (REF)
TAPE TO BASE HEAT SHIELD (LDW280P18339-23)

□ = NEXT AVAILIBLE SECT LETTER

DETAIL SPEC REQ	☐	CL II ENGRG CHG	☐	CL I ENGRG CHG	✓	LCD-1847	5

REASON FOR EO: ADDITIONAL THERMAL PROTECTION

DESCRIPTION OF EO:
FOR -41 ADDED LDW280P18339-1 & -23
FOR -39 ADDED LDW280P18339-3 & -23
ADDED SECT □

GAEC EO RELEASE: JK 8/1/67 C

MODEL	EFFECTIVITY: PROCURING ACTIVITY NO.	GAEC UNIT NO.	SUB CONTR UNIT NO.
LM		LM-2 (32)	

DRAWING CHANGE REQD		DISPOSITION OF PARTS	
REVISE DWG	RECORD EO	REWORK	SCRAP
✓		-39 -41	

APPROVED BY		SUPPORT	RELIAB GROUP	GROUP LEADER	STRESS GROUP	LIAISON ENGRG	PROJ ENGRG	GOVT
DATE	7/31/67		7/31/67	7/31/67	7/31/67		7/31/67	8-1-67
	VOI		M.S.					

PRIORITY: C
DRAWING TITLE: STANDOFF INSTL D.S. - FWD THERMAL
DRAWING NO. LDW280-52656
EO NO. C3

ISSUED BY H. PALLMEYER / J. STRAKOSCH SECTION VEH DES INT GROUP NO. 335 PL 25

01

NAS 9-1100

ENG 32.1 REV 3-65

C

GRUMMAN AIRCRAFT ENGINEERING CORP.
CODE IDENT NO. 26512
ENGINEERING ORDER

DWG. NO. LEO 280
EO NO. 817
CONTROL INFO NO. LDW280 B0644

FOR ALL DASH NUMBERS & NEXT ASSYS. IN M/B OF THE FOLLOWING DWGS. REMOVE LM 3 (33) THRU LM 15(45) REQUIREMENTS

ITEM	DWG. NO.	NEXT ASSY*	TITLE	CHANGE NO
✓ 1	LDW280P17460	LDW230-52656	SEE DWG.	C2
✓ 2	P17461	-51657		B7
✓ 3	P17462	-52658		B8
✓ 4	P17463	-52659		B8
✓ 5	-52656	-53553		C4
6	-52656	-54553		
7	-51657	-53553		B8
8	-51657	-54553		
9	-52658	-53553		B8
10	-52658	-54553		
11	-52659	-53553		B1
12	-52659	-54553	SEE DWG.	

DETAIL SPEC REQ	☐	CL II ENGRG CHG	☐	CL I ENGRG CHG	☑	LCD 2360	(5)

REASON FOR EO: REDESIGNED END BULKHDS

DESCRIPTION OF EO: REMOVED EFF LM-3 (33) THRU LM-15(45) FROM N/A*

GAEC C EO RELEASE: JK 12/16/67

MODEL	PROCURING ACTIVITY NO.	GAEC UNIT NO.	SUB CONTR UNIT NO.	REVISE DWG	RECORD EO	REWORK	SCRAP
LM		LM 3(33) THRU LM45(15)		✓			✓

EFFECTIVITY — DRAWING CHANGE REQD — DISPOSITION OF PARTS

		SUPPORT	RELIAB. GROUP	GROUP LEADER	STRESS GROUP	LIAISON ENGRG	PROJ ENGRG	~~GOVT~~
APPROVED BY				PST				
DATE	12/8/67			12-8-67			12/8/67	12-16-67
P	VDI							

PRIORITY	DRAWING TITLE	DRAWING NO.	EO NO.
C	NOTED	LEO280	817

21 DEC 67
ISSUED BY E.V.R. CASE / P. THORJUSEN SECTION VDI GROUP NO. 335 PL 25

01

NAS 9-1100

my

ENG 32.1 REV 3-65

B

GRUMMAN AIRCRAFT ENGINEERING CORP.

CODE IDENT NO. 26512

ENGINEERING ORDER

DWG. NO. LDW280-52656

EO NO. C5

CONTROL INFO NO. LM 29-1097

REVISE NOTE #3 AS FOLLOWS:

TO NOTE #3 (ADD) USE TEFLON GLASMO TEE E-24 THREAD, OR
AS AN ALTERNATE P5040-3THREAD OR
ASTROQUARTZ RQ754-12 THREAD.

ADD NOTE #*

TEFLON GLASMO TEE E-24 THREAD MAY BE PURCHASED FROM BELDING CORTICELLI CO, INC., 1407 BWAY, NEW YORK, N.Y. 10018. CODE IDENT. NO. 94448.

P5040-3 THREAD MAY BE PURCHASED FROM OWENS-CORNING FIBERGLASS CORP., TOLEDO, OHIO. CODE IDENT. NO. 45255.

ASTROQUARTZ RQ754-12 THREAD MAY BE PURCHASED FROM DODGE FIBERS CORP. P.O. BOX 124, HOOSICK FALLS, N.Y. CODE IDENT NO. 05712.

* DENOTES NEXT AVAILABLE NOTE NO.

DETAIL SPEC REQ ☐ CL II ENGRG CHG ☑ CL I ENGRG CHG ☐

(29)

REASON FOR EO: NO THREAD CALLOUT

DESCRIPTION OF EO: ADDED NOTE *. IN NOTE 3 ADDED "USE TEFLON GLASMO TEE E-24 THREAD OR AS AN ALTERNATE P5040-3 THREAD, OR ASTROQUARTZ RQ754-12 THREAD."

GAEC EO RELEASE

MODEL	EFFECTIVITY PROCURING ACTIVITY NO.	EFFECTIVITY GAEC UNIT NO.	EFFECTIVITY SUB CONTR UNIT NO.
LM		LM-2(32) THRU LM-15(45)	

DRAWING CHANGE REQD		DISPOSITION OF PARTS	
✓ REVISE DWG	RECORD EO	NOT REQD REWORK	SCRAP

APPROVED BY								
DATE	12/30/67			—			12/30/67	12-12-67
	VDI	SUPPORT	RELIAB. GROUP	GROUP LEADER	STRESS GROUP	LIAISON ENGRG	PROJ ENGRG	GOVT

PRIORITY: C29

DRAWING TITLE: STANDOFF INSTALLATION DESCENT STAGE - FWD THERMAL

DRAWING NO.: LDW280-52656

EO NO.: C5

ISSUED BY LIAISON C. J. MONTEBELLO X7930 SECTION VDI GROUP NO. 335 PL 25

GRUMMAN AIRCRAFT ENGINEERING CORP.
CODE IDENT NO. 26512
ENGINEERING ORDER

ENG 32.1 REV 3-65

DWG. NO. LEO280
EO NO. 822
CONTROL INFO NO. LDW280B0818

FOR ALL DASH NUMBERS & NEXT ASSYS. IN M/B OF THE FOLLOWING DWGS. REMOVE LM-3 (33) THRU LM-15(45) REQUIREMENTS

ITEM	DWG NO.	NEXT ASSY.	TITLE	CHANGE NO.
✓ 1.	LDW280-52656	LDW280-53509	SEE DWG.	C6
		-54509		
2.	-51657	-53509		B9
		-54509		
3.	-52658	-53509		B9
		-54509		
4.	LDW280-52659	-53509		B2
		LDW280-54509	SEE DWG.	

DETAIL SPEC REQ		CL II ENGRG CHG		CL I ENGRG CHG	✓	LCD 2360

REASON FOR EO: REDESIGNED END BULKHDS

DESCRIPTION OF EO: REMOVED EFF. LM-3(33) THRU LM-15(45) FOR ALL DASH NO'S

GAEC EO RELEASE: (5) JK 12/26/67

MODEL	PROCURING ACTIVITY NO.	GAEC UNIT NO.	SUB CONTR UNIT NO.
LM		LM-3 (33) THRU LM-15 (45)	

DRAWING CHANGE REQD: REVISE DWG	RECORD EO	DISPOSITION OF PARTS: REWORK	SCRAP
✓			✓

	V.D.I.	SUPPORT	RELIAB. GROUP	GROUP LEADER	STRESS GROUP	LIAISON ENGRG	PROJ ENGRG	GOVT
APPROVED BY	JAS			P. THORLUSEN				
DATE	12/18/67			12-18-67	12/20/67		12/18/67	12-26-67
P								

PRIORITY: C
DRAWING TITLE: NOTED
DRAWING NO.: LEO280
EO NO.: 822

21 DEC 67
ISSUED BY E.V.R. CASE / H. PALLMEYER / P. THORLUSEN x1153 SECTION V.D.I. GROUP NO. 335 PL 35

01 NAS 9-1100

LDW280-52658 B

MODEL OR END ITEM	NEXT ASSY	MODULE OR SER NO.	REQD PER MODULE OR END ITEM
PART NO.		GAEC SCH NO.	

MODEL OR END ITEM	NEXT ASSY	MODULE OR SER NO.	REQD PER MODULE OR END ITEM
LM	LDW280-52553	LM-2 (32)	1
PART NO. LDW280-52658-15		GAEC SCH NO. 52 –	

MODEL OR END ITEM	NEXT ASSY	MODULE OR SER NO.	REQD PER MODULE OR END ITEM
LM	LDW280-52509	LM-2 (32)	1
PART NO. LDW280-52658-13		GAEC SCH NO. 52 –	

5

SH REV STATUS: FOR DESCRIPTION OF REV SEE SUBQ SH

SHEET	1.00	1.10	2.00	2.01	3.00	4.00	5.00	6.00	
REV	B	B	B	B	B	B	B	B	
SHEET		1.11							
REV		B							
SHEET									
REV									

LAST SECT LTR USED	W	GRUMMAN REL INFO Ⓐ B	
		PRIM NO.	Y(001)
LAST DASH NO. USED	-21	215	~~MP 168 2/6/8~~

UNLESS OTHERWISE SPECIFIED DIMENSIONS ARE IN INCHES.
TOLERANCE UNLESS SPECIFIED
FRACTIONS - DECIMALS – ANGLES
± 1/32 ±.010 ± 1/2°

ORIG DWG AUTH

DETAIL SPEC REQUIREMENT	
CLASS II ENGRG CHANGE	
CLASS I ENGRG CHANGE	

CONTRACT NO. NAS9-1100
LINE ITEM 1
DOCUMENTATION TYPE II

DRAWN BY	G. KORDES 1-12-67	RELIABILITY	
LAYOUT BY	J. BUKOWSKI	Thereillo	3/24/67
CHECKED BY	H. RODALEWICZ		
~~GR LDR~~	—		
VEH. DES. INT	3/17		
STRUCTURES		PROJ ENGR	D. G. McGlaughlin 3/23/67
STRUCTURES	3/21	REL GROUP	
WEIGHTS			

GRUMMAN AIRCRAFT ENGRG CORP
BETHPAGE, L. I., NEW YORK

STANDOFF INSTL
DESCENT STAGE - AFT - THERMAL

SIZE	CODE IDENT NO.		
B	26512	LDW280-52658	B
SCALE	NONE	SHEET 1.00 OF 9	

ENG 77.1 12-65

01

NAS 9-1100

REVISIONS

FOR CONTINUATION OF REVISIONS SEE SHEET 1.11

CHANGE LTR	ITEM NO.	SHEET NO.	ZONE	GRUMMAN INFO ONLY	DET SPEC	CLASS I	CLASS II	ENGRG ORDER	DESCRIPTION	EFFECTIVITY	DISPOSITION OF EXISTING PARTS		CHANGED BY AND DATE	ENGRG APPD	~~[illegible]~~ APPD
											REWORK	SCRAP			
A	1	1.00, 1.10, 2.00, 2.01, 3, 4, 5, 6					✓	EO A1	EOA1 INITIAL DRAWING RELEASE PARTS MADE PER EO	LM-2 THRU LM-15	NOT	REQ'D	G. KORDES 1-12-67	3/27/67	
	2	1.00, 1.10, 2.00, 3, 4, 5, 6						EO A2	ON-5 REMOVED LDW280P17524-1 (6 PLCS)						
	3	3							IN F/D ADDED NOTE #8, #9 & #10. TO NOTE #3 ADDED-USING ASTROQUARTZ THREAD.	LM-2 THRU LM-15	NOT	REQD	NARONIS 2-24-67		
	4	1.10, 3, 4, 5 & 6							Ⓡ IN F/D ADDED VENT LOCATIONS PER LPC280-2 (17 PLACES)	LM-2 THRU LM-15	✓		V. NARCNIS 3/13/67		
B	1	2.00, 3.00 1.00, 1.10	3B				✓	EO B1	ON-5 ASSY ADDED LDW280-23712-7 & REMOVED LDW280P 17572-23 (TYP 4 PLACES)	LM-2 THRU LM-15	✓		F. LEGIDO 8-1-68		
	2	2.00, 3.00	4B				✓	EOB2 LCD-1135	IN F/D & B/M: FOR -11 ADDED LDW28P 17462-51. ADDED SECT U-U						
	3	2.00, 3.00					✓	EOB3	REF EO B1: REVISED CALLOUT ON-5 S/B ON-1						
	4	1.00, 2.00 2.01, 3.00 4.00, 5.00	4B 27A 18A			✓		EO B4 LCD-1244	ADDED -13(1) N/A LDW280-52509 EFF LM-2(32). ADDED -15(1) N/A LDW280-52553 EFF LM-2(32). IN M/B: FOR-1 REMOVED N/A LDW280-52509 EFF LM-2(32). FOR-3 REMOVED N/A LDW280-52553 EFF LM-2. ADDED SECTS ✱-✱, ✱✱-✱✱ & ⊖-⊖ (-13 & -15 MAY BE REWORKED FROM -1 & -3)	LM-2	NO	TED			
	5	2.00, 3.00	9C			✓		EOB5 LCD-1847	FOR-15 ADDED LDW280P18339-7 & 23. ADDED SECT V-V & NOTE 11, 12 & 13		✓				
	6	1.00, 2.00 2.01, 3.00 4.00, 6.00	11E 4A 18A 29A			✓		EO B6 LCD-1244	ADDED -17, -19, -21 ASSY'S. ADDED SECT W-W FOR -3. REMOVED FROM -3 MS51957-26 (14), LDW280P17575-11 (14). ON-3, -17 REPLACED -5. REMOVED FROM -1, MS20470A3(10) LDW280-28721-1(4), LDW280-23712-3(5), LDW280-23713-15(1), LDW280P17572-23 (4), GTA5356-LAS-0004(15). (-17, -19, -21 MAY BE REWORKED FROM -5, -7, -11 RESP.)	LM-3 THRU LM-15	NO	TED			
	7	2.00, 3.00	3B			✓		EOB7 LCD 1244	REF EOB6: IN FLD & B/M ON-1. REMOVE LDW280-23712-7 (4) WAS LDW280P17572-23 (4)		✓				
	8	1.00, 2.00 3.00, 4.00 6.00	4A 18A 29A	P		✓		LEO280-817 LCD2360	REMOVED EFF. LM-3(33) THRU LM-15(45) FOR N/A LDW280-53553 & LDW280-54553. (ON-3)			-3			
	9	1.00, 2.00 3.00, 4.00 6.00	4A 18A 29A	P		✓		LED280-822 LCD2360	REMOVED EFF LM-3(33) THRU LM-15(45) FOR N/A LDW280-53509 & LDW280-54509 (ON-1)			-1			

CHG APPROVED

LTR	~~GROUP LDR~~	VEH. DES. INT.	STRUCTURES	STRUCTURES	WEIGHTS	RELIABILITY	THERMO				
A		3/17/67					HB 3/24/67				
B				9/4/68			9/19/68				

GRUMMAN AIRCRAFT ENGRG CORP., BETHPAGE, L. I., NEW YORK

SIZE	CODE IDENT NO.		
B	26512	LDW280-52658	B

SCALE NONE

SHEET 1.10

ENG 77.16 3-66

01

NAS 9-1100

REVISIONS

CHANGE LTR	ITEM NO.	SHEET NO.	ZONE	GRUMMAN INFO ONLY	DET SPEC	CLASS I	CLASS II	ENGRG ORDER	DESCRIPTION	EFFECTIVITY	DISPOSITION OF EXISTING PARTS		CHANGED BY AND DATE	ENGRG APPD	GOVT APPD
											REWORK	SCRAP			
B	10					✓		LCD 1244	REF EO B4: ADDED SECT'S *-*, **-** & ◒-◒ NOT APPLICIABLE. ADDED SH 1.11	LM-2	NOT	ED	LEGIDO 8-1-68	F. Zulicas 8-1-68	
	11	100, 1.11 200, 3.00	5B			✓		LCD 1594	ON - 15 ADDED LDW 360-28297-17 (REF LDW 360-28279 E.O. C2) WCGrumbel	LM-2	✓		LANZANO 8-13-68		8-13-68

FOR CONTINUATION OF REVISIONS SEE SHEET ______

ENG 77.3 5-66

GRUMMAN AIRCRAFT ENGRG CORP, BETHPAGE, L. I., NEW YORK

SIZE	CODE IDENT NO.		
B	26512	LDW280-52658	B
SCALE NONE			SHEET 1.11

01

NAS 9-1100

-17 360 28297

	-		-11	-9	-7	-5	-15	-13	CODE IDENT	PART NO.	I&T	NOMENCLATURE OR DESCRIPTION	MATERIAL	GOVT SPEC	COML SPEC	STOCK SIZE	PROCESS SYM	FINISH NO.	ZONE
							/			MS20470AD4	E	RIVET	STD PART						
										MS20470A3		RIVET							
							14			MS51957-30		SCREW							
							17			MS51957-26		SCREW	STD PART						
							1			LDW280P18339-23		TAPE ASSY	SEE DWG						9C
							1			LDW280P18339-7		BLANKET ASSY							9C
						AR	AR			LDW280P17590-11		TAPE							4B
						39				LDW280P17523-3		CAP							3B
							31			LDW280P17575-11		RETAINER							3B
								15		LDW280-23712-3		STANDOFF ASSY							18A
						1				LDW360-28297-17		TRANSDUCER							5B
																			11F
																			11F
										LDW280P17462-51		BLANKET ASSY							9B
					1					LDW280P17462-29		BLANKET ASSY							4B
			1							LDW280P17462-43		SKIN							9B
				1						LDW280P17462-37		BLANKET ASSY	SEE DWG						4B
						1				LDW280-52658-11		SKIN					NONE	NONE	4A
						1				-9		BLANKET ASSY					NONE	NONE	4A
						1				-7		BLANKET ASSY					NONE	NONE	4A
							1			-5		BLANKET ASSY					NONE	NONE	4A
										-15		BLANKET INSTL					NONE	NONE	4A
										LDW280-52658-13	E	STANDOFF INSTL					NONE	NONE	4A

QTY PER ASSEMBLY

SYM OR NO.	PROCESS OR FINISH	GRUMMAN SPEC OR MILITARY SPEC	SYM OR NO.	PROCESS OR FINISH	GRUMMAN SPEC OR MILITARY SPEC	SYM OR NO.	PROCESS OR FINISH	GRUMMAN SPEC OR MILITARY SPEC

I & T: IDENTIFICATION AND TRACEABILITY IN ACCORDANCE WITH : NONE

GRUMMAN AIRCRAFT ENGRG CORP, BETHPAGE, L. I., NEW YORK

SIZE	CODE IDENT NO.		
B	26512	LDW280-52658	B

SCALE NONE

SHEET 2.00

ENG 77.2 7-65

01

NAS 9-1100

QTY PER ASSEMBLY																			
			-11	-9	-7	-5	-15	-13	CODE IDENT	PART NO.	I&T	NOMENCLATURE OR DESCRIPTION	MATERIAL	GOVT SPEC	COML SPEC	STOCK SIZE	PROCESS SYM	FINISH NO.	ZONE
								AR		GT835M-8	E	TAPE	GRUMMAN STD						
						AR				GT835P-8	↑	TAPE	GRUMMAN STD						
						AR				SEE NOTE 9		THREAD, ASTROQUARTZ							
						2				GT535L-HA-0250		TAPE, FASTENER	GRUMMAN STD						
								23		GT535G-LAS-0004		TAPE, FASTENER	↑						
						39				GS26D-1		STANDOFF ASSY							
						31				GW10H-1	↓	WASHER	↓						
						31				GB10J-1	E	BUSHING	GRUMMAN STD						

SYM OR NO.	PROCESS OR FINISH	GRUMMAN SPEC OR MILITARY SPEC	SYM OR NO.	PROCESS OR FINISH	GRUMMAN SPEC OR MILITARY SPEC	SYM OR NO.	PROCESS OR FINISH	GRUMMAN SPEC OR MILITARY SPEC

I & T: IDENTIFICATION AND TRACEABILITY IN ACCORDANCE WITH :
NONE

GRUMMAN AIRCRAFT ENGRG CORP, BETHPAGE, L. I., NEW YORK

SIZE	CODE IDENT NO.		
B	26512	LDW280-52658	B

SCALE NONE
SHEET 2.01

ENG 77.2 7-65

01
NAS 9-1100

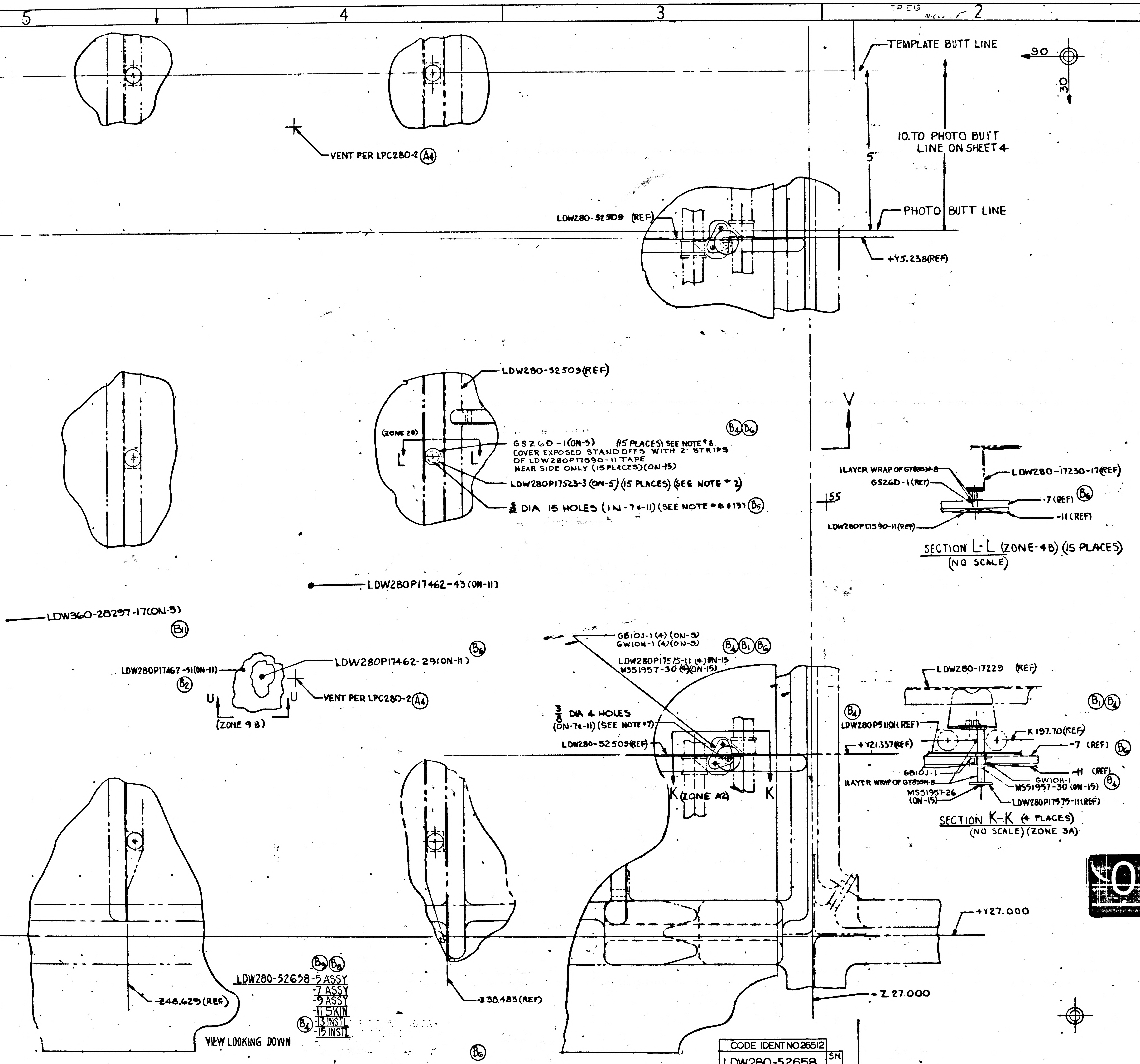

TEMPLATE BUTT LINE
10. TO PHOTO BUTT LINE ON SHEET 4
PHOTO BUTT LINE
+45.238(REF)
90
30
5
VENT PER LPC280-2 (A4)
LDW280-52509 (REF)
LDW280-52509(REF)
(ZONE 2B)
L
L
GS26D-1(ON-5) (15 PLACES) SEE NOTE # 8.
COVER EXPOSED STANDOFFS WITH 2" STRIPS OF LDW280P17590-11 TAPE NEAR SIDE ONLY (15 PLACES)(ON-15)
(B4)(B6)
LDW280P17523-3 (ON-5) (15 PLACES) (SEE NOTE # 2)
5/32 DIA 15 HOLES (IN-7 & -11) (SEE NOTE # 8 # 13) (B5)
V
55
1 LAYER WRAP OF GT835M-8
GS26D-1(REF)
LDW280-17230-17(REF)
-7 (REF) (B6)
-11 (REF)
LDW280P17590-11(REF)
SECTION L-L (ZONE-4B) (15 PLACES)
(NO SCALE)
LDW280P17462-43 (ON-11)
LDW360-28297-17(ON-5)
(B11)
LDW280P17462-51(ON-11)
LDW280P17462-29(ON-11)
(B2)
U
U
(ZONE 9 B)
VENT PER LPC280-2 (A4)
GB10J-1 (4) (ON-5)
GW10H-1 (4)(ON-5)
(B4)(B1)(B6)
LDW280P17575-11 (4) ON-15
MS51957-30 (4)(ON-15)
3/8 DIA 4 HOLES
(ON-7 & -11) (SEE NOTE # 7)
LDW280-52509(REF)
K (ZONE A2)
K
LDW280-17229 (REF)
(B1)(B4)
(B4)
LDW280P51101(REF)
X 197.70(REF)
+Y21.337(REF)
-7 (REF) (B6)
-11 (REF)
GB10J-1
1 LAYER WRAP OF GT835M-8
GW10H-1
(B4)
MS51957-30 (ON-15)
MS51957-26 (ON-15)
LDW280P17575-11(REF)
SECTION K-K (4 PLACES)
(NO SCALE) (ZONE 3A)
+Y27.000
Z 27.000
-248.625(REF)
-238.483 (REF)
(B9)(B8)
LDW280-52658-5 ASSY
-7 ASSY
-9 ASSY
-11 SKIN
(B4) -13 INSTL
-15 INSTL
VIEW LOOKING DOWN
(B6)

NOTES:

1. BOND LDW280P17936-13 TO STRUCTURE AS SHOWN WITH EPON 934 PER LSP14-22500.
2. FASTEN LDW280P17523-3 TO GS26D-1 PER LPC280-14
3. SEW GT535-HA-0250 TO -5 AT 3/16 ± 1/16 FROM EDGES OF GT535L-HA-0250 IN ACCORDANCE WITH FED STD # 751a & STITCH TYPE 301 USING ASTROQUARTZ THREAD.

~~4. -5 ASSY SHOWN ON THIS DRAWING HAS BEEN DRAWN TO PROJECTED DIMS. THIS ASSY SHALL BE MADE TO EXPANDED DIMENSIONS BY MAKING A PHOTO LOFT TO THE EXPANDED TRAMMEL POINT DIMENSIONS INDICATED BELOW. THE EXPANSION RATIO .030 IN/IN~~

~~TRAMMEL POINT~~	~~SHOWN~~	~~EXPANDED~~
~~SHEET 3 LENGTH~~	~~80.0~~	~~82.700~~
~~3 WIDTH~~	~~30.0~~	~~30.900~~
~~SHEET 4 LENGTH~~	~~90.0~~	~~92.700~~
~~4 WIDTH~~	~~30.0~~	~~30.900~~
~~SHEET 5 LENGTH~~	~~80.0~~	~~82.700~~
~~5 WIDTH~~	~~30.0~~	~~30.900~~
~~SHEET 6 LENGTH~~	~~70.0~~	~~72.100~~
~~6 WIDTH~~	~~30.0~~	~~30.900~~
~~CONTROL POINTS~~		
~~SHEET 3~~	~~55.0~~	~~56.650~~
~~SHEET 4~~	~~55.0~~	~~56.650~~
~~SHEET 5~~	~~72.0~~	~~74.160~~
~~SHEET 6~~	~~36.0~~	~~37.080~~
~~PHOTO BUTT (ALL)~~	~~10.0~~	~~10.300~~
~~TEMP BUTT (ALL)~~	~~5.0~~	~~5.150~~

4. INSTALL FASTENERS PER LSP14-15302
5. TOLERANCE ON TRIM OF BLANKETS IS ± 1/2
6. FABRICATE -5 BLANKET ASSY PER LPC280-1.
7. ALL ALUMINIZED MYLAR PARTS SHALL HAVE HOLE PATTERNS LOCATED WITH EXPANDED DIMS. THE EXPANSION RATIO IS TO BE .050 IN/IN (E.G. 10.000 SHOWN EXPANDS TO 10.500).
   ALL ALUMINIZED POLIMIDE PARTS SHALL HAVE HOLE PATTERNS LOCATED WITH EXPANDED DIMS. THE EXPANSION RATIO IS TO BE .070 IN/IN. (E.G. 10.000 SHOWN EXPANDS TO 10.700)
8. LDW280P17700-17 MAY BE USED AS AN ALTERNATE FOR GS26D-1.
9. ASTROQUARTZ RQ754-12 THREAD MAY BE PURCHASED FROM DODGE FIBERS CORP P.O. BOX 124, HOOSICK FALLS, N.Y. CODE IDENT NO. 05712.
10. FINAL SIZE (WITH FOLD AND SEAM LOCATION) OF BLANKET ASSEMBLIES SHALL BE DETERMINED FROM APPROVED MASTER TEMPLATE (AND/OR FULL SIZE MOCKUP).
11. TRIM LDW280P18339-7 ON INSTALLATION TO MATCH SHAPE OF PLUME IMPINGEMENT SHIELD. BUTT FIT TO 2" MAX CLEARANCE. TRIM AS REQD TO CLEAR PENETRATIONS BY 2" MAX.
12. TAPE EDGES OF LDW280P18339-7 TO EXISTING INSULATION USING LDW280P18339-25 TAPE 4" TO 6" STRIPS 1" MIN. SPACE BETWEEN STRIPS.
13. PICK UP EXISTING STANDOFF LOCATIONS AND PUNCH 5/32 DIA. HOLES IN LDW280P18339-7 & INSTALL WITH EXISTING HDW.

MANUFACTURING OPERATIONS
UNLESS OTHERWISE SPECIFIED
NOTES CHECKED ✓ APPLY TO THIS DWG.

PART NUMBER AND ALL OTHER MARKINGS IN REGION MARKED ☒ USE BOTH SIDES IF NECESSARY.	
FILLET AND INSIDE CORNER RADII TOLERANCES .016R TO .062R ± .010 .063R TO .250R ± .015 OVER .250R ± .030	
DEPTH SHOWN FOR TAPPED HOLES IS FULL THDS. 2-3 IMP THDS. BEYOND PERMISSIBLE.	
EXTERNAL THREAD LENGTH SHOWN INCLUDES 2 IMPERFECT THREADS MAX.	
DO NOT CADMIUM PLATE & PAINT HOLES OR SURFACES MARKED WITH DOUBLE ASTERISK.	
MISMATCH STEP OF ± .005 PERMISSIBLE DUE TO CHANGE OF CUTTERS AT INSIDE INTERSECTING SURFACES.	
DIAMETERS MARKED MUST BE CONCENTRIC WITHIN FULL INDICATOR READING	
HOLES MUST BE KEPT FREE OF CHROME PLATING SOLUTION.	
ALL DIMENSIONS SHOWN TO BE MET AFTER CADMIUM PLATING. THICKNESS OF PLATE .0003 MIN. TO .0005 MAX. MIN. THICKNESS TO BE .0002 ON THREADED AREAS. NO ALLOWANCE FOR PLATING IN HOLES	
125 √ SURFACE ROUGHNESS INCLUDING REAMED HOLES PER MIL-STD-10	
250 √ FOR ALL DRILLED HOLES	
REMOVE ALL BURRS. BREAK ALL EDGES .015-.031	
INSPECTION INFORMATION MINIMUM PERMISSIBLE AVERAGE EDGE DISTANCE MARKED IS	
SYMBOL √ DENOTES SURFACE TO BE MACHINED	
UNLESS OTHERWISE SPECIFIED TOLERANCE ON FLANGES IS ± 1/32	
LENGTHS OF AN, NAS & MS AL ALY RIVETS SHORTER THAN 1 INCH ARE NOT SPECIFIED.	✓
TOLERANCE ON LOFTED DELINEATIONS IS ± 1/32	✓

EXCEPT AS NOTED

DWG SIZE 34 X 106
PRINTING INFO ONLY

03/03 NAS 9-1100

CODE IDENT NO 26512
LDW280-52658 SH. 3

GRUMMAN AIRCRAFT ENGRG CORP., BETHPAGE, L. I., NEW YORK

MODEL OR END ITEM	SIZE	CODE IDENT NO.		
LM	J	26512	LDW280-52658	B
	SCALE FULL		SHEET 3.00	

FOR PHOTO REPRODUCTION

THIS IS AN ORIGINAL DWG.

LDW280-52658 B

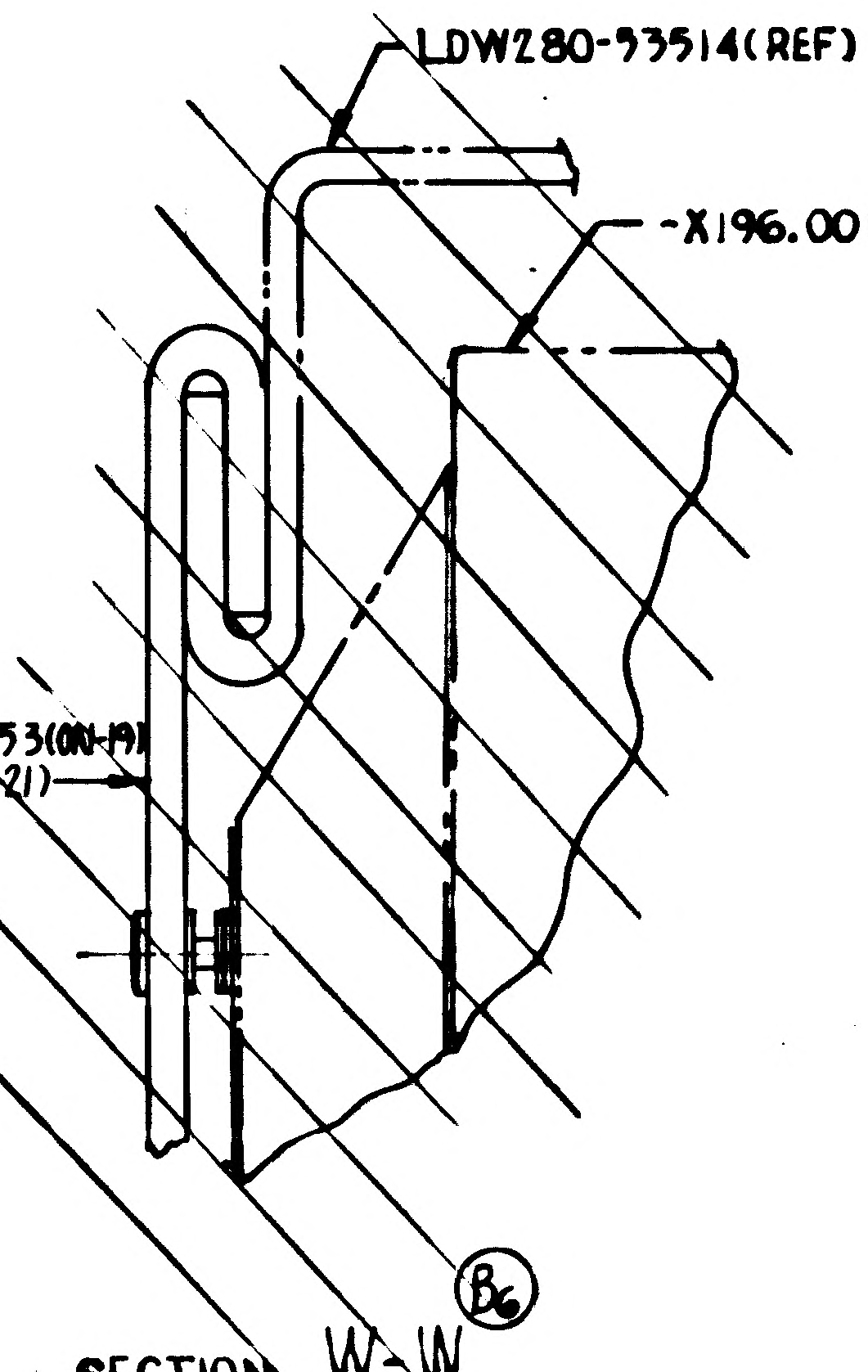
LDW280-53514(REF)
-X196.00(REF)
LDW280P17462-53(ON-19)
-57(ON-21)
B6

SECTION W-W
(ZONE 8E SH.4)

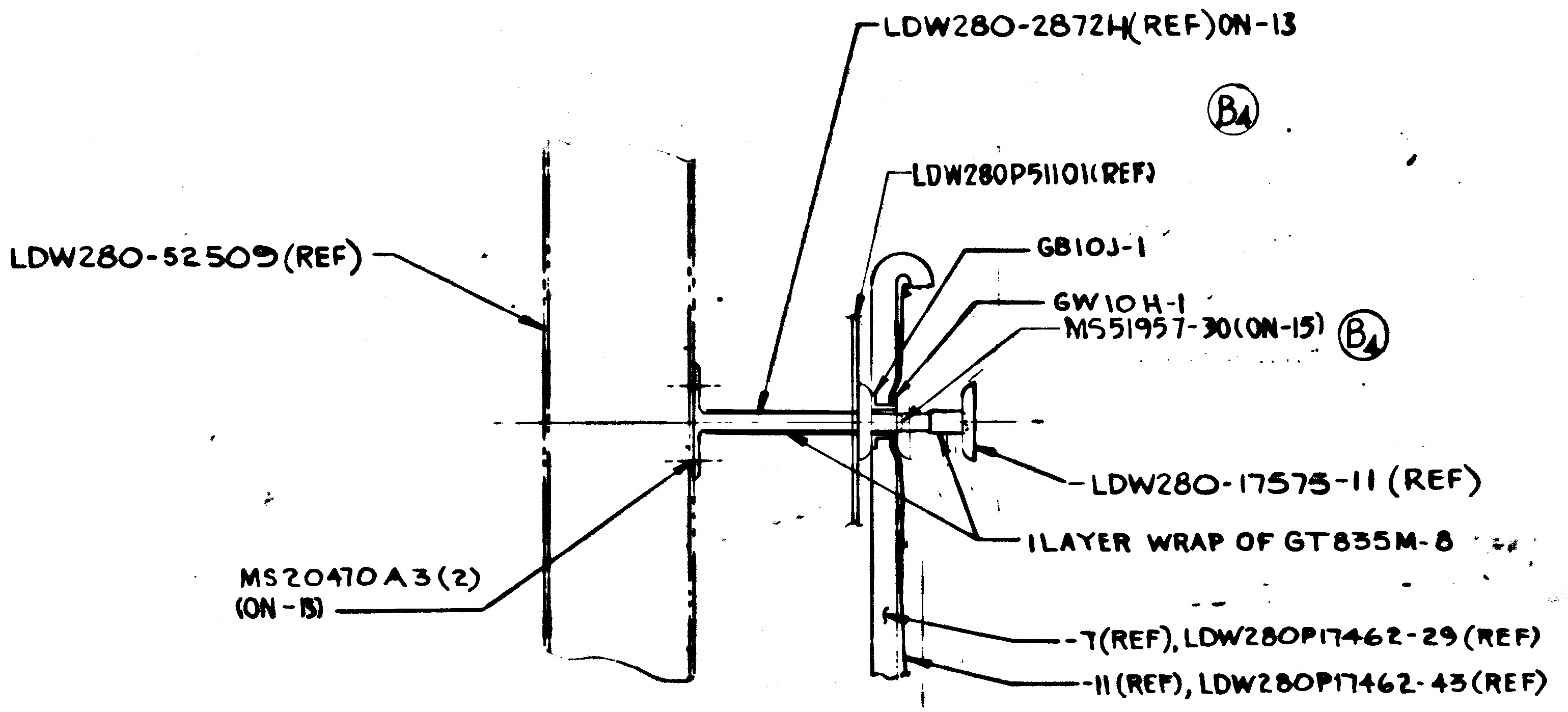
LDW280-2872H(REF)ON-13
B4
LDW280P51101(REF)
LDW280-52509(REF)
GB10J-1
GW10H-1
MS51957-30(ON-15)
B4
LDW280-17575-11 (REF)
1LAYER WRAP OF GT835M-8
MS20470A3(2)
(ON-13)
-7(REF), LDW280P17462-29(REF)
-11(REF), LDW280P17462-43(REF)

SECTION N-N
(ZONE 6F SH 4)

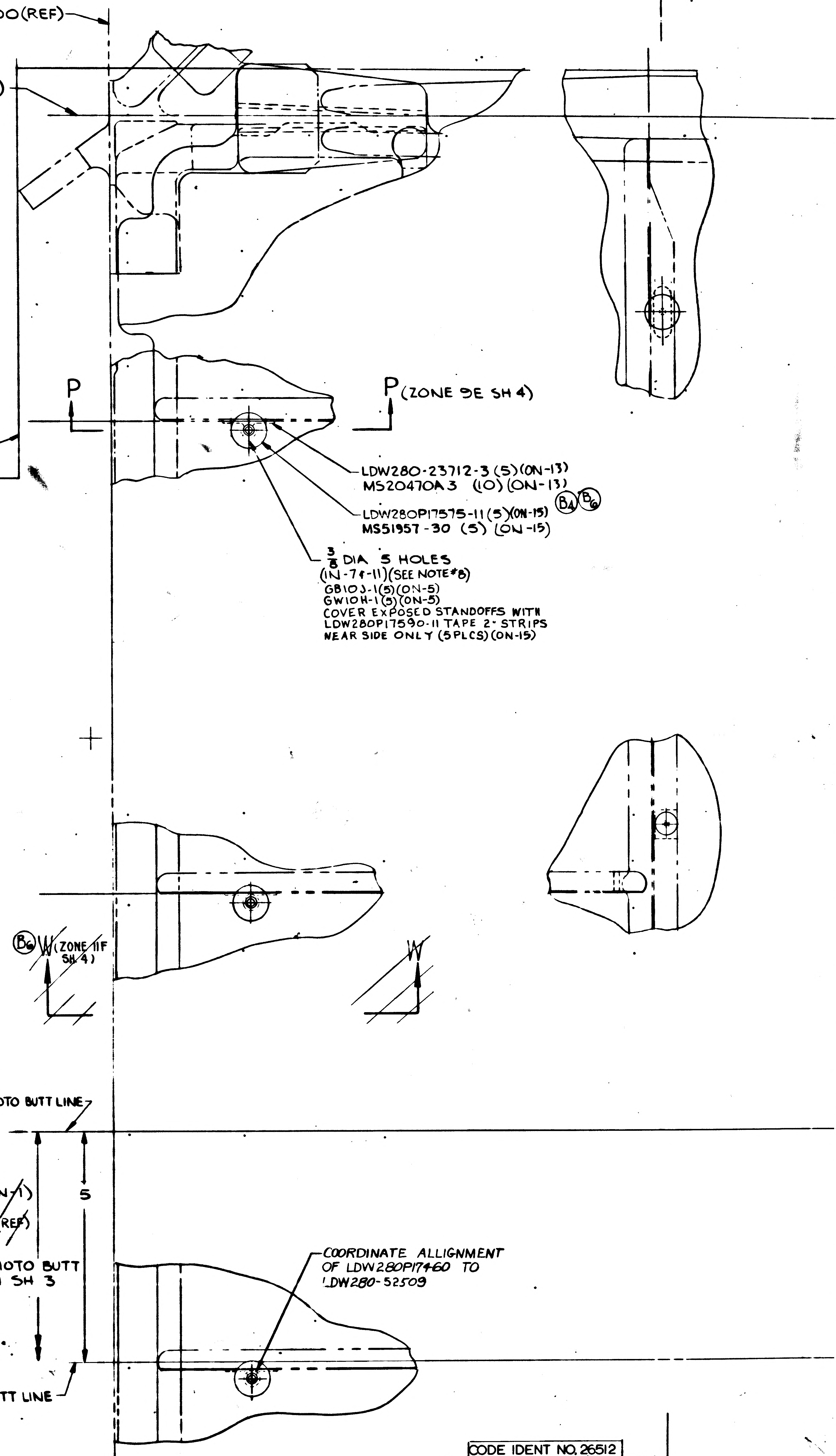
-Z81.000(REF)
-Y27.000(REF)
LDW280-17462-1 (REF)
P
P (ZONE 9E SH 4)
LDW280-23712-3 (5)(ON-13)
MS20470A3 (10)(ON-13)
LDW280P17575-11(5)(ON-15)
MS51957-30 (5) (ON-15)
B4
B6
$\frac{3}{8}$ DIA 5 HOLES
(IN-7#-11)(SEE NOTE#8)
GB10J-1(5)(ON-5)
GW10H-1(5)(ON-5)
COVER EXPOSED STANDOFFS WITH
LDW280P17590-11 TAPE 2" STRIPS
NEAR SIDE ONLY (5PLCS)(ON-15)
B6
W (ZONE 11F SH 4)
W
PHOTO BUTT LINE
5
10 TO PHOTO BUTT LINE ON SH 3
TEMP BUTT LINE
COORDINATE ALLIGNMENT OF LDW280P17460 TO LDW280-52509

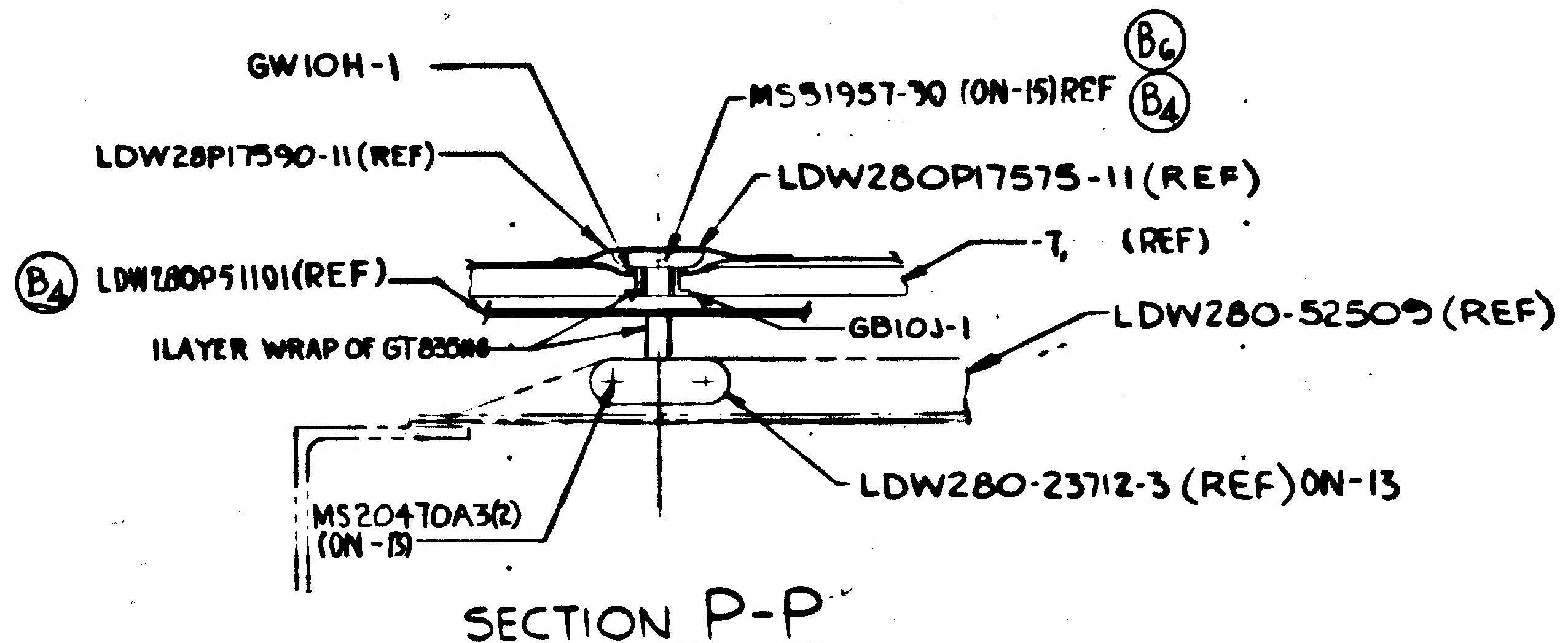
GW10H-1
B6
MS51957-30 (ON-15)REF
B4
LDW28P17590-11(REF)
LDW280P17575-11(REF)
-7, (REF)
B4
LDW280P51101(REF)
GB10J-1
LDW280-52509(REF)
1LAYER WRAP OF GT835M8
MS20470A3(2)
(ON-15)
LDW280-23712-3 (REF)ON-13

SECTION P-P
(ZONE 7F SH 4)

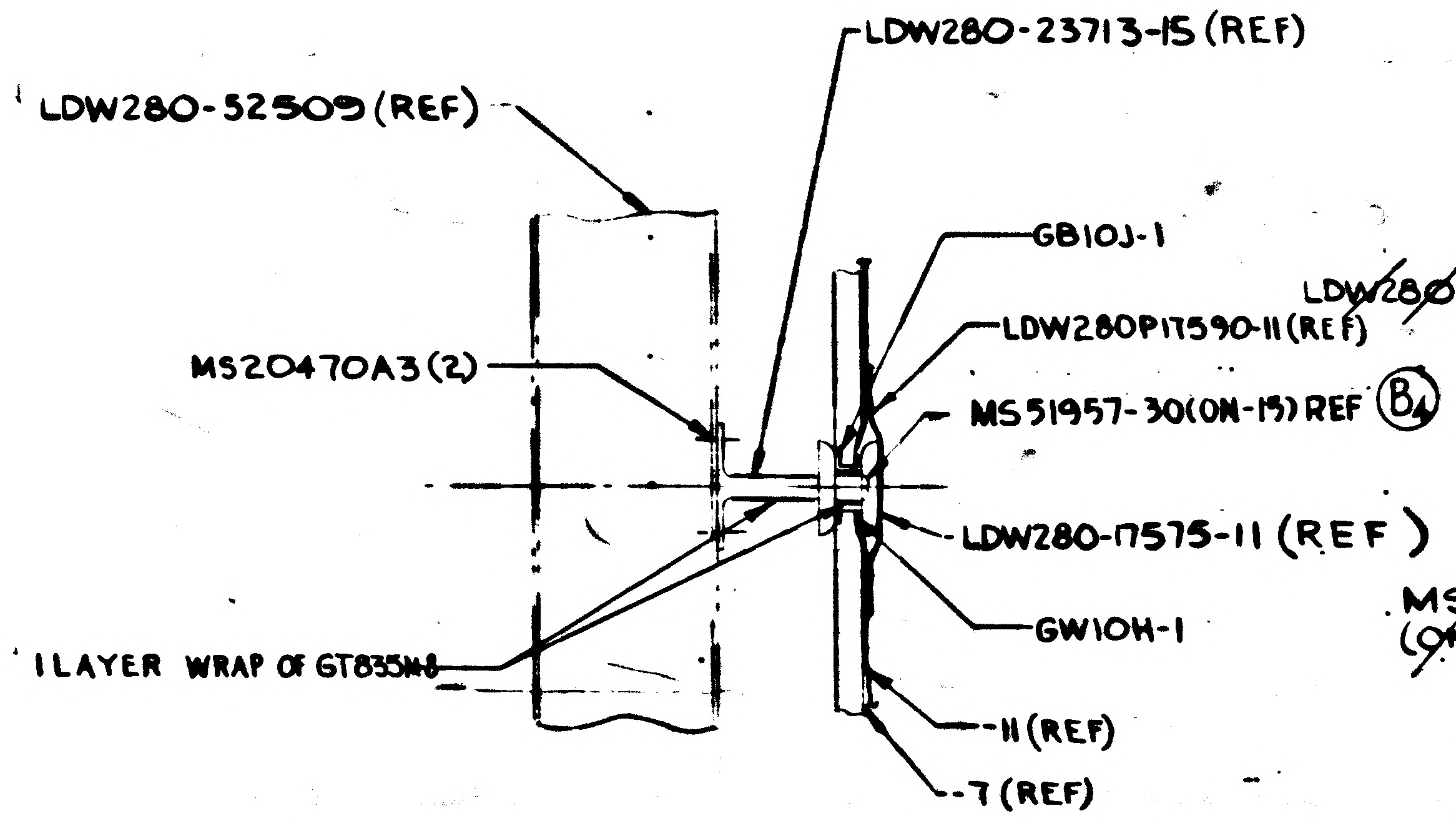
LDW280-23713-15 (REF)
LDW280-52509(REF)
GB10J-1
LDW280P17590-11(REF)
MS20470A3(2)
MS51957-30(ON-15) REF
B4
LDW280-17575-11 (REF)
GW10H-1
1LAYER WRAP OF GT835M8
-11(REF)
-7(REF)

SECTION R-R
(ZONE 4E SH 4)

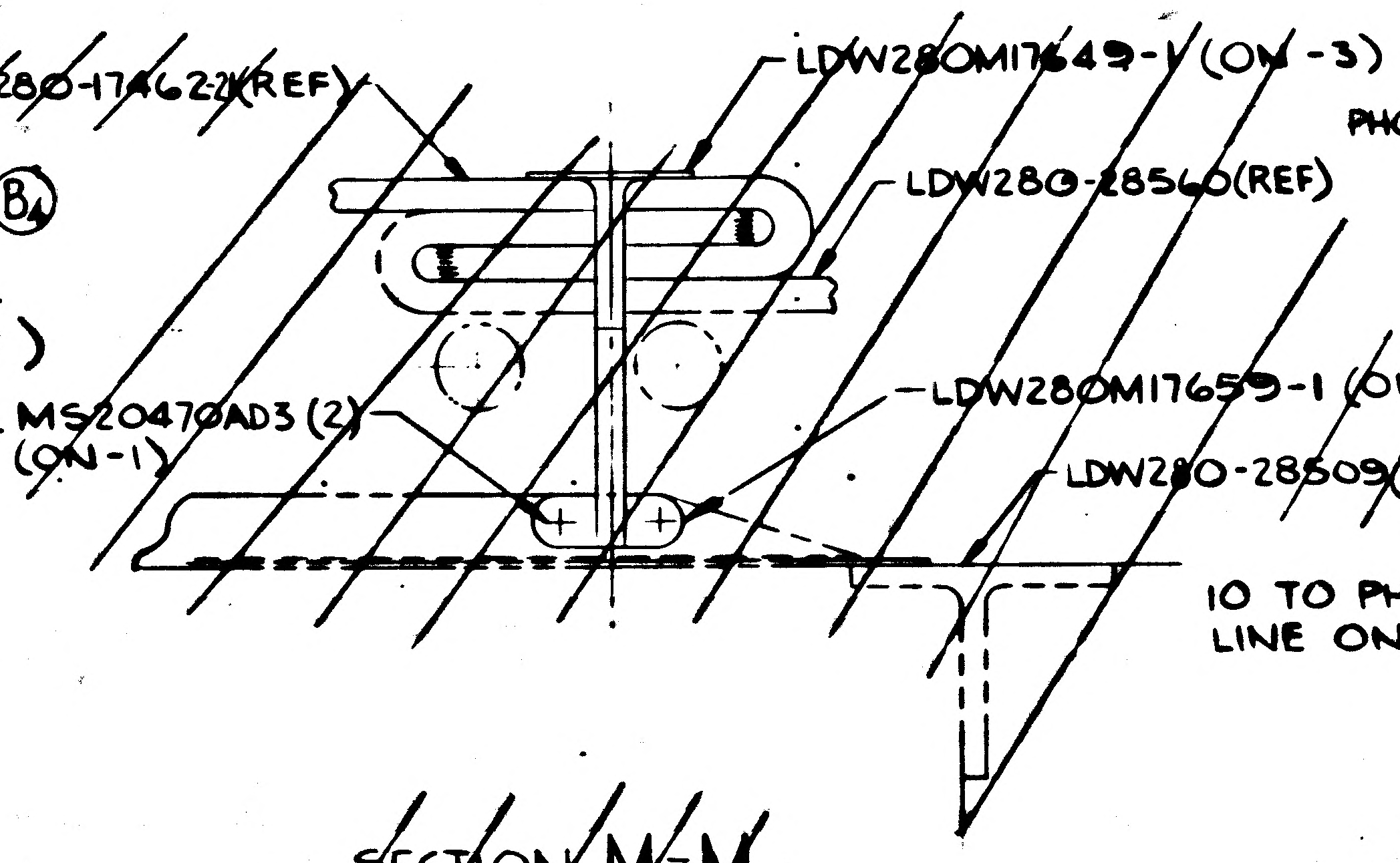
LDW280-17462-21(REF)
LDW280M17649-1 (ON-3)
LDW280-28560(REF)
MS20470AD3 (2)
(ON-1)
LDW280M17659-1 (ON-1)
LDW280-28509(REF)

SECTION M-M
(ZONE 3D SH 4)

01/03

NAS 9-1100

CODE IDENT NO. 26512
LDW280-52658
SH 4

7
6
5
4
3
-Z 27.000 (REF
N
N
(ZONE 9F SH 4)
$\frac{3}{8}$ DIA 4 HOLES
(ON-7 & -11) (SEE NOTE #8)
LDW280-17575-11 (4) ON-15
MS51957-30 (4) (ON-15)
B6
B4 B6
ONE 9E SH 4)
D-23712-3 (5) (ON-13)
70A3 (10) (ON-13)
B4 B6
P17575-11 (5) (ON-15)
-30 (5) (ON-15)
OLES
NOTE #8)
N-5)
N-5)
ED STANDOFFS WITH
0-11 TAPE 2" STRIPS
LY (5 PLCS) (ON-15)
VENT PER LPC280-2 A4
VENT PER LPC280-2 A4
R
$\frac{3}{8}$ DIA HOLE
(IN-7 & -11) (SEE NOTE #8)
LDW280P17575-11 (ON-15)
MS51957-30 (ON-15)
GB10J-1 (ON-5)
GW10H-11 (ON-5)
B6 B4
COVER EXPOSED STANDOFF WITH
2" STRIPS OF LDW280P17590-11 TAPE
NEAR SIDE ONLY (ON-15)
R (ZONE 10D SH 4)
+55
ALLIGNMENT
17460 TO
9
5
10 TO PH
LINE ON
~~(ZONE 9D SH 4)~~
M
M
TEMP B
$\frac{3}{8}$ DIA HOLE
(IN-7 & -11)
7
6
5
4
3

CODE IDENT NO. 26512
LDW280-52658 SH 4

02/03 NAS 9-1100

CODE IDENT NO. 26512
LDW280-52658 SH 4

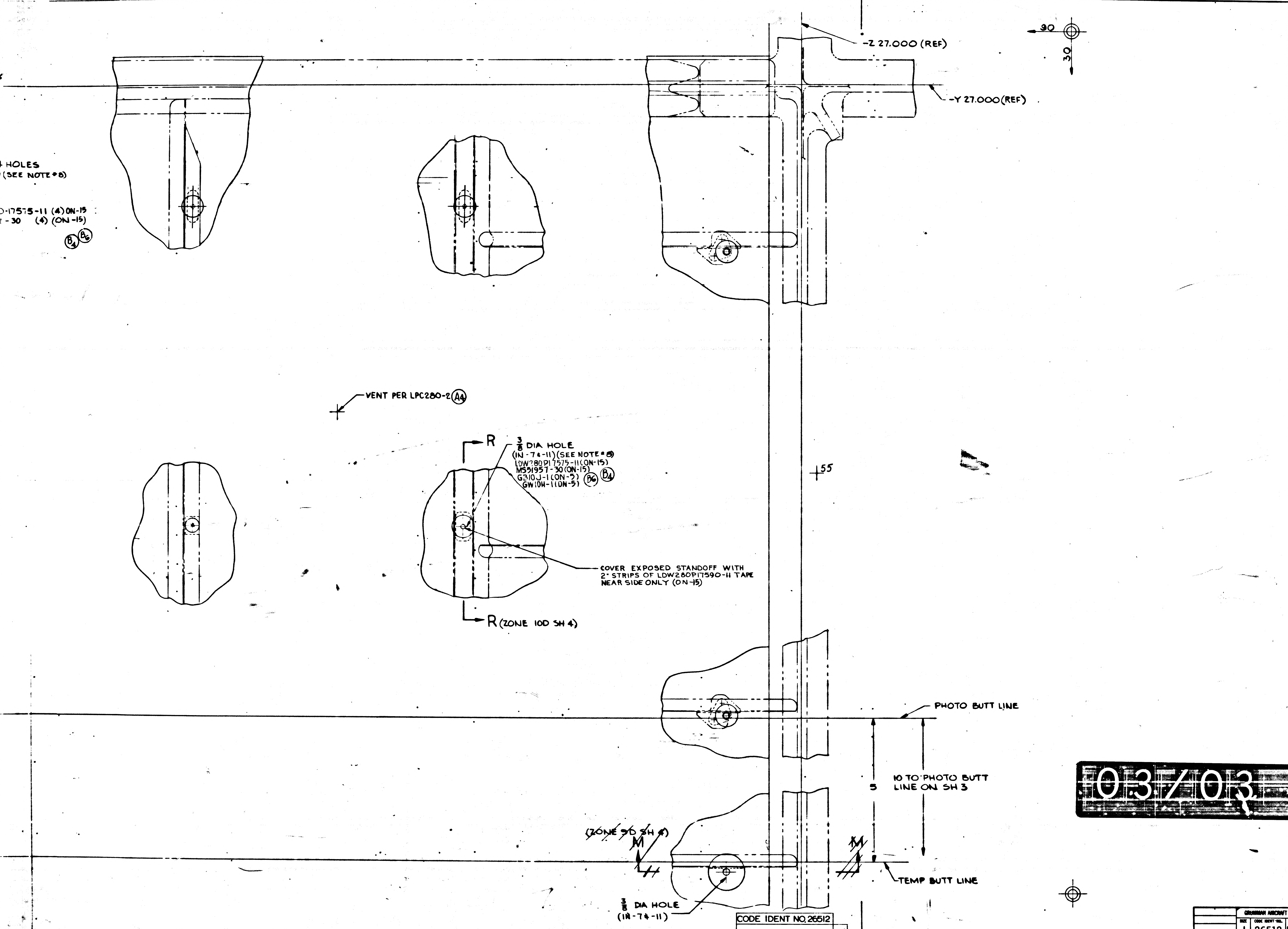

4 HOLES
(SEE NOTE #8)
0-17575-11 (4) ON-15
7-30 (4) (ON-15)
Ⓑ4 Ⓑ6

VENT PER LPC280-2 Ⓐ4

3/8 DIA HOLE
(IN-74-11) (SEE NOTE #8)
LDW280P17575-11 (ON-15)
MS51957-30 (ON-15)
G310J-1 (ON-5) Ⓑ6 Ⓑ4
GW10H-1 (ON-5)

COVER EXPOSED STANDOFF WITH
2" STRIPS OF LDW280P17590-11 TAPE
NEAR SIDE ONLY (ON-15)

3/8 DIA HOLE
(IN-74-11)

MANUFACTURING OPERATIONS
UNLESS OTHERWISE SPECIFIED
NOTES CHECKED ✓ APPLY TO THIS DWG.

PART NUMBER AND ALL OTHER MARKINGS IN REGION MARKED ☒ USE BOTH SIDES IF NECESSARY.

FILLET AND INSIDE CORNER RADII TOLERANCES
.016R TO .062R ± .010
.063R TO .250R ± .015
OVER .250R ± .030

DEPTH SHOWN FOR TAPPED HOLES IS FULL THDS. 2-3 IMP THDS. BEYOND PERMISSIBLE.

EXTERNAL THREAD LENGTH SHOWN INCLUDES 2 IMPERFECT THREADS MAX.

DO NOT CADMIUM PLATE & PAINT HOLES OR SURFACES MARKED WITH DOUBLE ASTERISK.

MISMATCH STEP OF ± .005 PERMISSIBLE DUE TO CHANGE OF CUTTERS AT INSIDE INTERSECTING SURFACES.

DIAMETERS MARKED MUST BE CONCENTRIC WITHIN FULL INDICATOR READING

HOLES MUST BE KEPT FREE OF CHROME PLATING SOLUTION.

ALL DIMENSIONS SHOWN TO BE MET AFTER CADMIUM PLATING. THICKNESS OF PLATE .0003 MIN. TO .0005 MAX. MIN. THICKNESS TO BE .0002 ON THREADED AREAS. NO ALLOWANCE FOR PLATING IN HOLES

125 SURFACE ROUGHNESS INCLUDING REAMED HOLES PER MIL-STD-10

250 FOR ALL DRILLED HOLES

REMOVE ALL BURRS. BREAK ALL EDGES .015-.031

INSPECTION INFORMATION MINIMUM PERMISSIBLE AVERAGE EDGE DISTANCE MARKED IS

SYMBOL √ DENOTES SURFACE TO BE MACHINED

UNLESS OTHERWISE SPECIFIED TOLERANCE ON FLANGES IS ± 1/32

LENGTHS OF AN, NAS & MS AL ALY RIVETS SHORTER THAN 1 INCH ARE NOT SPECIFIED.

TOLERANCE ON LOFTED DELINEATIONS IS

DWG SIZE 34 X 106
PRINTING INFO ONLY
FULL SIZE SHEET LA (36 X 106)
27 SQ. FT.
PRINT TRIM LINE

LDW280-52658 B
LDW280-52658 B

03/03
NAS 9-1100

CODE IDENT NO. 26512
LDW280-52658 SH 4

GRUMMAN AIRCRAFT ENGRG CORP., BETHPAGE, L. I., NEW YORK
LM
MODEL OR END ITEM
SIZE J
CODE IDENT NO. 26512
LDW280-52658 B
SCALE FULL
SHEET 4.00

FOR PHOTO REPRODUCTION

THIS IS AN ORIGINAL DRAWING 3 FR

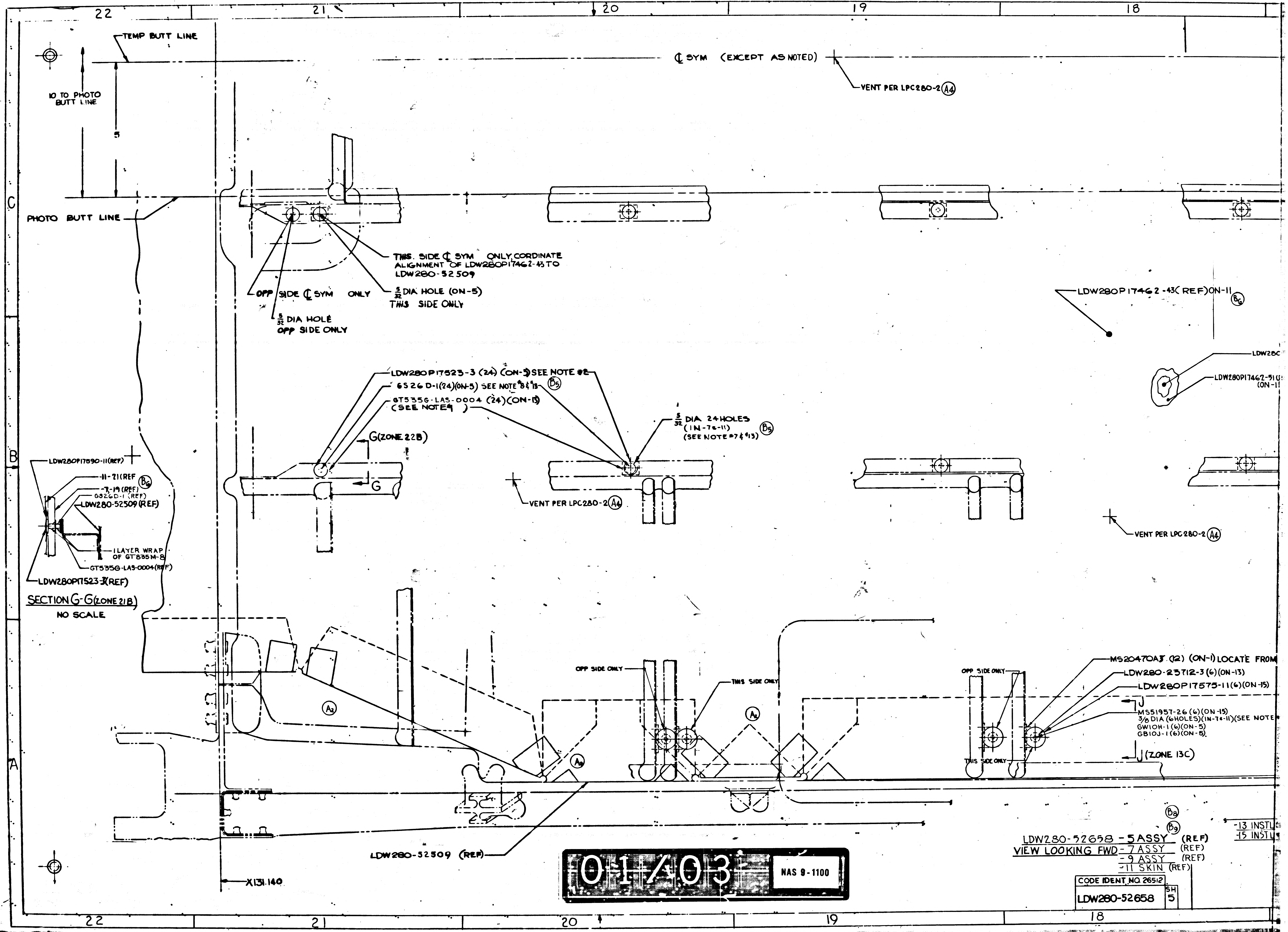
22
21
20
19
18
TEMP BUTT LINE
10 TO PHOTO BUTT LINE
5
℄ SYM (EXCEPT AS NOTED)
VENT PER LPC280-2 (A4)
C
PHOTO BUTT LINE
THIS SIDE ℄ SYM ONLY CORDINATE ALIGNMENT OF LDW280P17462-43 TO LDW280-52509
OPP SIDE ℄ SYM ONLY
5/32 DIA HOLE (ON-5) THIS SIDE ONLY
5/32 DIA HOLE OPP SIDE ONLY
LDW280P17462-43 (REF) ON-11 (B6)
LDW28C
LDW280P17462-51
(ON-1
LDW280P17523-3 (24) (ON-5) SEE NOTE #2
6526D-1(24)(ON-5) SEE NOTE #8 & #13 (B5)
GT535G-LAS-0004 (24)(ON-13) (SEE NOTE 9)
5/32 DIA 24 HOLES (IN-76-11) (SEE NOTE #7 & #13) (B5)
G(ZONE 22B)
G
B
LDW280P17590-11(REF)
-11-21(REF (B6)
-7,-19 (REF)
6526D-1 (REF)
LDW280-52509 (REF)
1 LAYER WRAP OF GT835M-8
GT535G-LAS-0004(REF)
LDW280P17523-3(REF)
SECTION G-G (ZONE 21B)
NO SCALE
VENT PER LPC280-2 (A4)
VENT PER LPC280-2 (A4)
A
(A2)
(A2)
(A4)
OPP SIDE ONLY
THIS SIDE ONLY
OPP SIDE ONLY
THIS SIDE ONLY
MS20470A3 (12) (ON-1) LOCATE FROM
LDW280-23712-3 (6)(ON-13)
LDW280P17575-11(6)(ON-15)
J
MS51957-26 (6)(ON-15)
3/8 DIA (6 HOLES)(IN-76-11)(SEE NOTE
GW10H-1 (6)(ON-5)
GB10J-1 (6)(ON-5)
J (ZONE 13C)
LDW280-52509 (REF)
X131.140
(B8)
(B9)
-13 INST
-15 INST

LDW280-52658 -5 ASSY (REF)
VIEW LOOKING FWD -7 ASSY (REF)
-9 ASSY (REF)
-11 SKIN (REF)

CODE IDENT NO 26512
LDW280-52658
SH 5

01/03
NAS 9-1100

18
17
16
15
14
TEMP BUTT LINE
10 TO PHOTO BUTT LINE
5
PHOTO BUTT LINE
VENT PER LPC280-2 (A4)
LDW280P17462-43(REF)ON-11 (B6)
LDW280P17462-29(REF)ON-7 (B6)
LDW280P17462-51(REF) (B2) (ON-11)
VENT PER LPC280-2 (A4)
VENT PER LPC280-2 (A4)
MS20470A3 (12) (ON-1) LOCATE FROM LDW280-23712-3
LDW280-23712-3(6)(ON-13)
LDW280P17575-11(6)(ON-15)
J
MS51957-26(6)(ON-15)
3/8 DIA (6HOLES)(IN-7&-11)(SEE NOTE #7)
GW10H-1(6)(ON-5)
GB10J-1(6)(ON-5)
J (ZONE 13C)
OPPSIDE ONLY
THIS SIDE ONLY
(A2)
X196.00 (REF)
Y27.00(REF)
SEE DETAIL 'F' (FOR L.H.SIDE ONLY) (ZONE 13A)
(B8)
(B9)
-13 INSTL(REF)
-15 INSTL (REF) (B8)(B9)
(B4)
(B6)
...3C-52658 -5 ASSY (REF)
LOOKING FWD -7 ASSY (REF)
-9 ASSY (REF)
-11 SKIN (REF)
GW10H-1
LDW280P17575-11(REF)
GB10J-1
-11(REF)
SECTION J
NO
LDW280-28559(REF)
LDW280P17575-11(REF)
LDW280P17936-51 (REF)
LDW280-23712-1 (REF)
72
LDW280P17462-11(REF)
LDW280-28509 (REF)
SECTION H-H (ZONE 13A)
NO SCALE
LDW280P17462-11(REF)
LDW280P17936-47 (ON-5)
H
ZONE 14B
3
H
34(REF)
DETAIL F (ZONE 13A)
(L.H. SIDE ONLY)
NO SCALE
90

CODE IDENT NO. 26512
LDW280-52658 SH 5

02/03 NAS 9-1100

CODE IDENT NO. 26512
LDW280-52658 SH 5

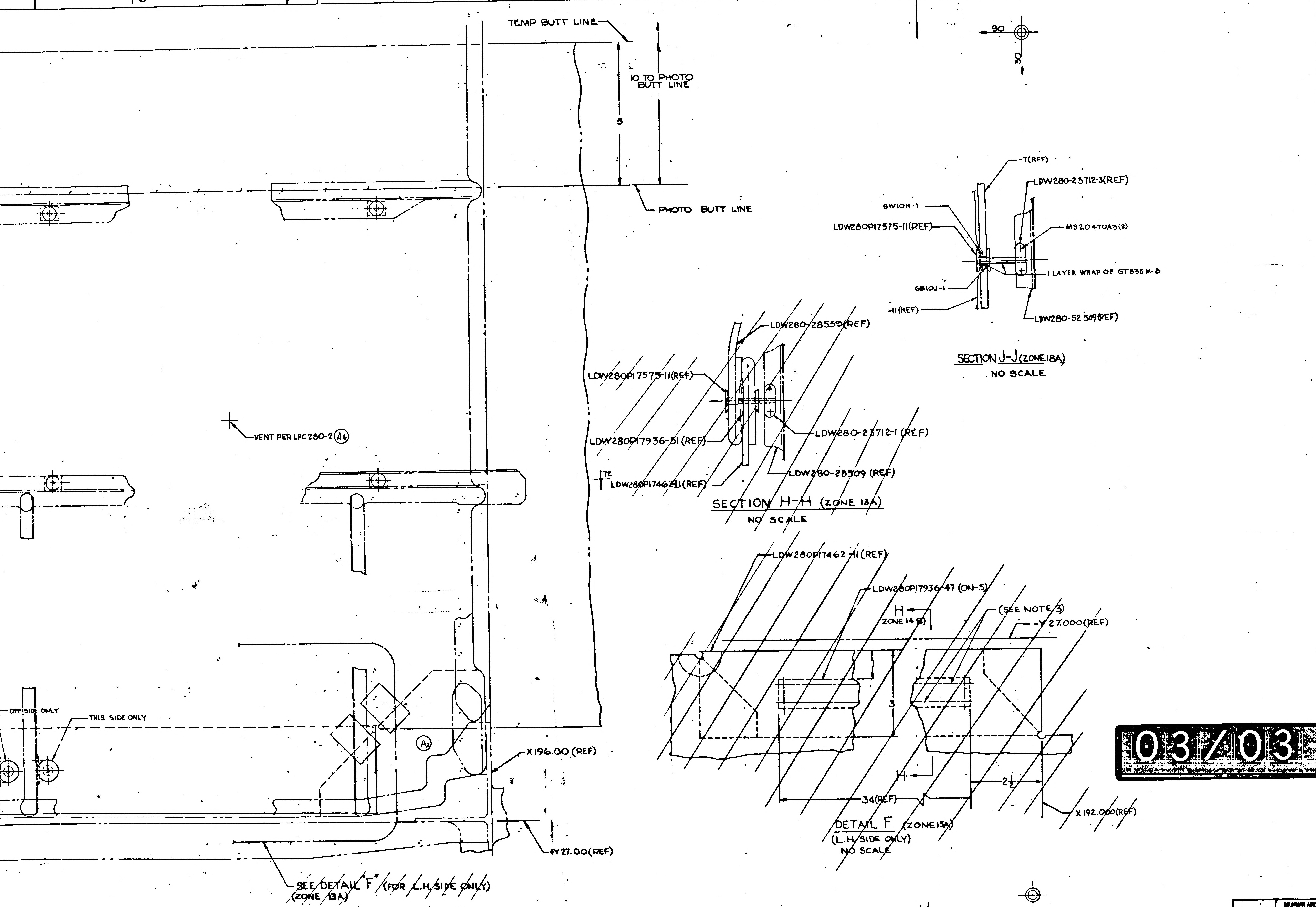
16
15
14
13
12
TEMP BUTT LINE
10 TO PHOTO BUTT LINE
5
PHOTO BUTT LINE
90
30
-7(REF)
LDW280-23712-3(REF)
GW10H-1
LDW280P17575-11(REF)
MS20470A3(2)
1 LAYER WRAP OF GT835M-8
GB10J-1
-11(REF)
LDW280-52509(REF)
SECTION J-J (ZONE 18A)
NO SCALE
LDW280-28555(REF)
LDW280P17575-11(REF)
LDW280P17936-51 (REF)
LDW280-23712-1 (REF)
LDW280-28509 (REF)
72
LDW280P17462-11(REF)
SECTION H-H (ZONE 13A)
NO SCALE
VENT PER LPC280-2 (A4)
LDW280P17462-11(REF)
LDW280P17936-47 (ON-5)
H
ZONE 14 B
(SEE NOTE 3)
-Y 27.000(REF)
3
H
34(REF)
2½
X 192.000(REF)
DETAIL F (ZONE 15A)
(L.H. SIDE ONLY)
NO SCALE
OPP SIDE ONLY
THIS SIDE ONLY
(A2)
X 196.00 (REF)
-Y 27.00(REF)
SEE DETAIL "F" (FOR L.H. SIDE ONLY)
(ZONE 13A)

03/03 NAS 9-1100

MANUFACTURING OPERATIONS
UNLESS OTHERWISE SPECIFIED
NOTES CHECKED ✓ APPLY TO THIS DWG.

PART NUMBER AND ALL OTHER MARKINGS IN REGION MARKED ⊠ USE BOTH SIDES IF NECESSARY.

FILLET AND INSIDE CORNER RADII TOLERANCES
.015R TO .062R ± .000
.063R TO .250R ± .015
OVER .250R ± .030

DEPTH SHOWN FOR TAPPED HOLES IS FULL THDS. 2-3 IMP THDS. BEYOND PERMISSIBLE.

EXTERNAL THREAD LENGTH SHOWN INCLUDES 2 IMPERFECT THREADS MAX.

DO NOT CADMIUM PLATE & PAINT HOLES OR SURFACES MARKED WITH DOUBLE ASTERISK.

MISMATCH STEP OF ± .005 PERMISSIBLE, DUE TO CHANGE OF CUTTERS AT INSIDE INTERSECTING SURFACES.

DIAMETERS MARKED MUST BE CONCENTRIC WITHIN FULL INDICATOR READING

HOLES MUST BE KEPT FREE OF CHROME PLATING SOLUTION.

ALL DIMENSIONS SHOWN TO BE MET AFTER CADMIUM PLATING. THICKNESS OF PLATE .0003 MIN. TO .0005 MAX. MIN. THICKNESS TO BE .0002 ON THREADED AREAS. NO ALLOWANCE FOR PLATING IN HOLES

125 ▽ SURFACE ROUGHNESS INCLUDING REAMED HOLES PER MIL-STD-10

250 ▽ FOR ALL DRILLED HOLES

REMOVE ALL BURRS. BREAK ALL EDGES .015-.031

INSPECTION INFORMATION MINIMUM PERMISSIBLE AVERAGE EDGE DISTANCE MARKED IS

SYMBOL ƒ DENOTES SURFACE TO BE MACHINED

UNLESS OTHERWISE SPECIFIED TOLERANCE ON FLANGES IS ± 1/32

LENGTHS OF AN, NAS & MS AL ALY RIVETS SHORTER THAN 1 INCH ARE NOT SPECIFIED.

TOLERANCE ON LOFTED DELINEATIONS IS

DWG SIZE 34 X 106

PRINTING INFO ONLY
FULL SIZE SHEET AREA (36 X 108) - 360 SQ FT
1/2 SIZE SHEET AREA (1/4 OF FULL) - 90 SQ FT

PRINT TRIM LINE

C
B
A
LDW280-52658 B
LDW280-52658 B

CODE IDENT NO. 26512	SH
LDW280-52658	5

GRUMMAN AIRCRAFT ENGRG CORP., BETHPAGE, L.I., NEW YORK

	SIZE	CODE IDENT NO.		
CM.	J	26512	LDW280-52658	B
MODEL OR END ITEM	SCALE FULL & NOTED			SHEET 5.00

FOR PHOTO REPRODUCTION

THIS IS AN ORIGINAL DRAWING

3FR

LDW280-52658

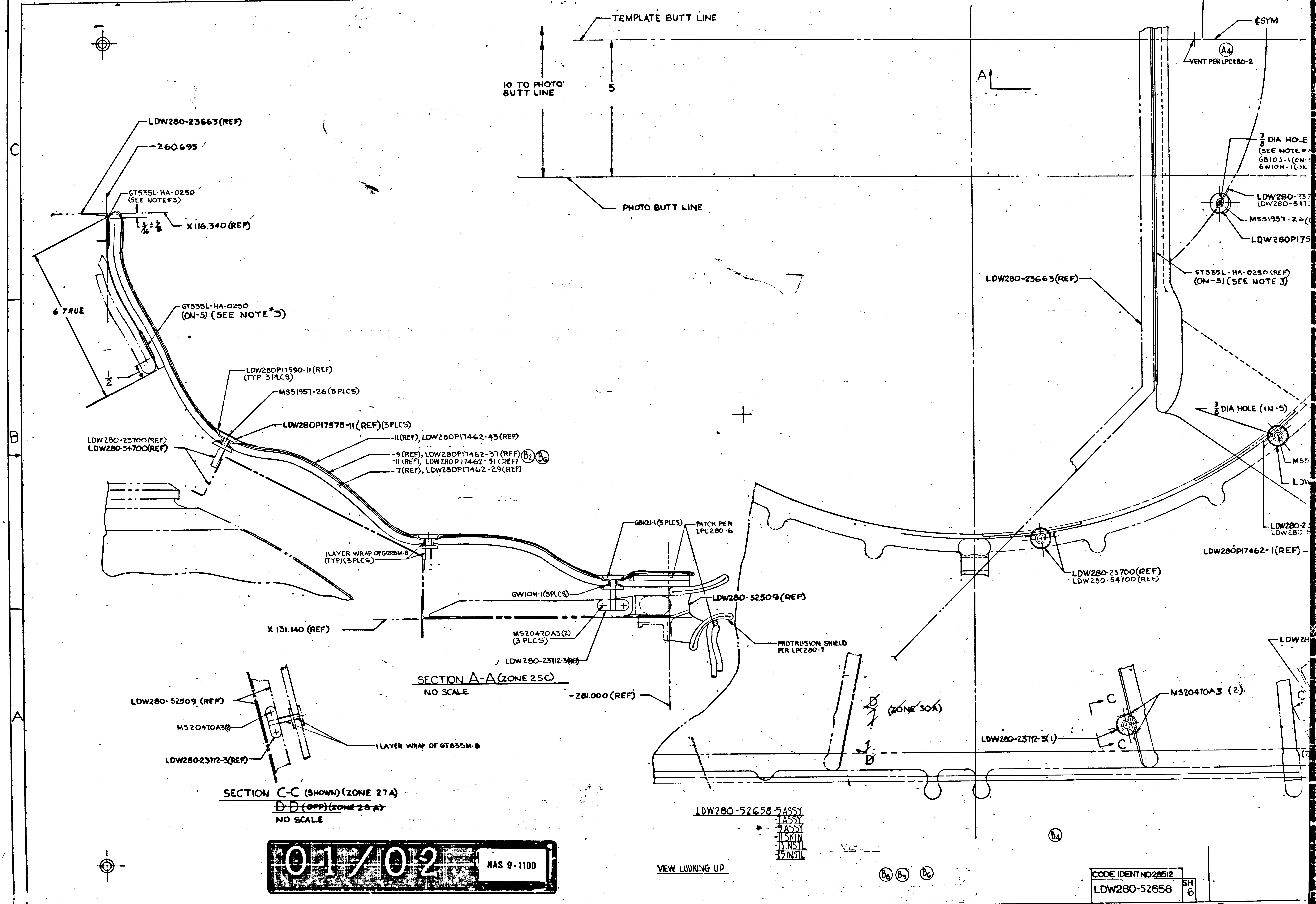
TEMPLATE BUTT LINE
10 TO PHOTO BUTT LINE
5
PHOTO BUTT LINE
A
C
B
A
¢SYM
A4
VENT PER LPC280-2
LDW280-23663(REF)
-260.695
GT535L-HA-0250 (SEE NOTE#3)
X116.340(REF)
6 TRUE
1/2
GT535L-HA-0250 (ON-5) (SEE NOTE#3)
LDW280P17590-11(REF) (TYP 3PLCS)
MS51957-26(3 PLCS)
LDW280P17575-11(REF)(3PLCS)
-11(REF), LDW280P17462-43(REF)
-9(REF), LDW280P17462-37(REF)
-11(REF), LDW280P17462-51(REF)
B2 B6
-7(REF), LDW280P17462-29(REF)
LDW280-23700(REF)
LDW280-54700(REF)
1 LAYER WRAP OF GT835M-8 (TYP)(3PLCS)
GB103-1(3PLCS)
PATCH PER LPC280-6
GW10H-1(3PLCS)
LDW280-52509(REF)
X 131.140 (REF)
MS20470A3(2) (3 PLCS)
LDW280-23712-3(REF)
PROTRUSION SHIELD PER LPC280-7
SECTION A-A (ZONE 25C)
NO SCALE
-281.000 (REF)
LDW280-52509 (REF)
MS20470A3(2)
LDW280-23712-3(REF)
1 LAYER WRAP OF GT835M-8
SECTION C-C (SHOWN)(ZONE 27A)
D-D (OPP) ~~(ZONE 28 A)~~
NO SCALE
3/8 DIA HOLE (SEE NOTE #
GB103-1(ON-
GW10H-1(ON-
LDW280-237
LDW280-547
MS51957-26(
LDW280P175
GT535L-HA-0250 (REF) (ON-5)(SEE NOTE 3)
LDW280-23663(REF)
3/8 DIA HOLE (IN-5)
MS5
LDW
LDW280-23
LDW280-5
LDW280P17462-1(REF)
LDW280-23700(REF)
LDW280-54700(REF)
D
D (ZONE 30A)
LDW280-23712-3(1)
C
C
MS20470A3 (2)
LDW28
LDW280-52658-5ASSY
-7ASSY
-9ASSY
-11SKIN
-13INSTL
-15INSTL
B4
VIEW LOOKING UP
B8 B9 B6

01/02

NAS 9-1100

CODE IDENT NO 28512

LDW280-52658

SH 6

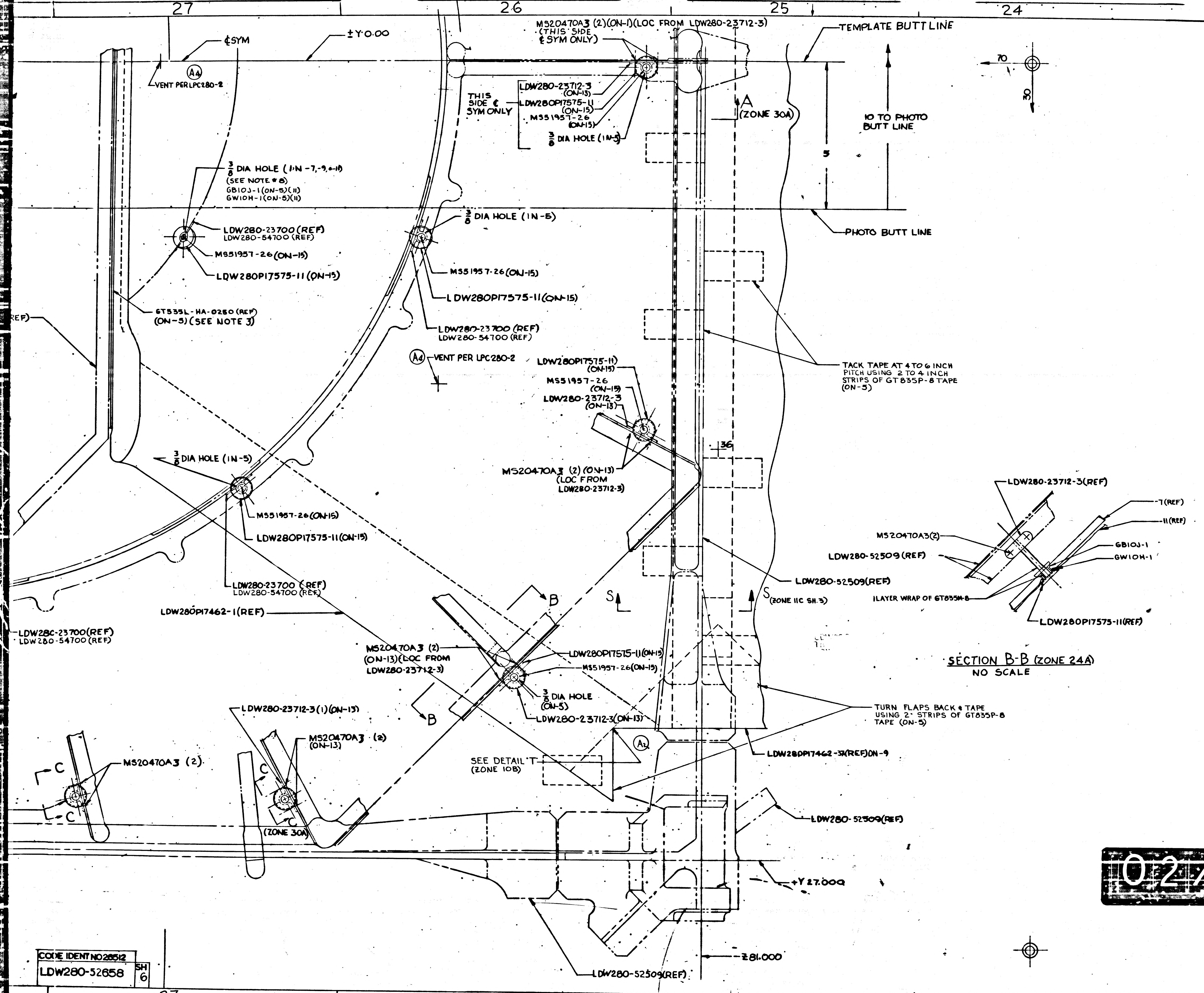
27
26
25
24
23
℄SYM
±Y 0.00
VENT PER LPC280-2
A4
MS20470A3 (2)(ON-1)(LOC FROM LDW280-23712-3)
(THIS SIDE ℄ SYM ONLY)
TEMPLATE BUTT LINE
THIS SIDE ℄ SYM ONLY
LDW280-23712-3 (ON-13)
LDW280P17575-11 (ON-15)
MS51957-26 (ON-15)
3/8 DIA HOLE (1N-5)
A (ZONE 30A)
10 TO PHOTO BUTT LINE
5
70
30
3/8 DIA HOLE (1N-7,-9,-11)
(SEE NOTE 8)
GB10J-1 (ON-5)(11)
GW10H-1 (ON-5)(11)
LDW280-23700 (REF)
LDW280-54700 (REF)
MS51957-26 (ON-15)
LDW280P17575-11 (ON-15)
3/8 DIA HOLE (1N-5)
MS51957-26 (ON-15)
LDW280P17575-11 (ON-15)
PHOTO BUTT LINE
GT535L-HA-0250 (REF)
(ON-5) (SEE NOTE 3)
LDW280-23700 (REF)
LDW280-54700 (REF)
REF)
A4 VENT PER LPC280-2
LDW280P17575-11) (ON-15)
MS51957-26 (ON-15)
LDW280-23712-3 (ON-13)
TACK TAPE AT 4 TO 6 INCH PITCH USING 2 TO 4 INCH STRIPS OF GT835P-8 TAPE (ON-5)
36
MS20470A3 (2) (ON-13) (LOC FROM LDW280-23712-3)
3/8 DIA HOLE (1N-5)
MS51957-26 (ON-15)
LDW280P17575-11 (ON-15)
LDW280-23700 (REF)
LDW280-54700 (REF)
LDW280P17462-1 (REF)
LDW28C-23700 (REF)
LDW280-54700 (REF)
B
S
S (ZONE 11C SH.3)
LDW280-52509 (REF)
MS20470A3 (2)
(ON-13) (LOC FROM LDW280-23712-3)
LDW280P17575-11 (ON-15)
MS51957-26 (ON-15)
3/8 DIA HOLE (ON-5)
LDW280-23712-3 (ON-13)
B
LDW280-23712-3(1)(ON-13)
MS20470A3 (2) (ON-13)
C
MS20470A3 (2)
C
C
C
(ZONE 30A)
SEE DETAIL 'T' (ZONE 10B)
A2
TURN FLAPS BACK & TAPE USING 2" STRIPS OF GT835P-8 TAPE (ON-5)
LDW280P17462-3X(REF) ON-9
LDW280-52509 (REF)
+Y 27.000
Z 81.000
LDW280-52509 (REF)
LDW280-23712-3 (REF)
-7 (REF)
-11 (REF)
MS20470A3 (2)
LDW280-52509 (REF)
GB10J-1
GW10H-1
1 LAYER WRAP OF GT835H-8
LDW280P17575-11 (REF)

SECTION B-B (ZONE 24A)
NO SCALE

MANUFACTURING OPERATIONS
UNLESS OTHERWISE SPECIFIED
NOTES CHECKED ✓ APPLY TO THIS DWG

PART NUMBER AND ALL OTHER MARKINGS IN REGION MARKED ▭ USE BOTH SIDES IF NECESSARY.

FILLET AND INSIDE CORNER RADII TOLERANCES
.01R TO .062R ± .010
.063R TO .250R ± .015
OVER .250R ± .030

DEPTH SHOWN FOR TAPPED HOLES IS FULL THDS. 2-3 IMP THDS. BEYOND PERMISSIBLE.

EXTERNAL THREAD LENGTH SHOWN INCLUDES 2 IMPERFECT THREADS MAX.

DO NOT CADMIUM PLATE & PAINT HOLES OR SURFACES MARKED WITH DOUBLE ASTERISK.

MISMATCH STEP OF ± .005 PERMISSIBLE DUE TO CHANGE OF CUTTERS AT INSIDE INTERSECTING SURFACES.

DIAMETERS MARKED MUST BE CONCENTRIC WITHIN FULL INDICATOR READING

HOLES MUST BE KEPT FREE OF CHROME PLATING SOLUTION.

ALL DIMENSIONS SHOWN TO BE MET AFTER CADMIUM PLATING. THICKNESS OF PLATE .0003 MIN. TO .0005 MAX. MIN. THICKNESS TO BE .0002 ON THREADED AREAS. NO ALLOWANCE FOR PLATING IN HOLES

125 SURFACE ROUGHNESS INCLUDING REAMED HOLES PER MIL-STD-10

250 FOR ALL DRILLED HOLES

REMOVE ALL BURRS. BREAK ALL EDGES .015-.031

INSPECTION INFORMATION MINIMUM PERMISSIBLE AVERAGE EDGE DISTANCE MARKED IS

SYMBOL ƒ DENOTES SURFACE TO BE MACHINED

UNLESS OTHERWISE SPECIFIED TOLERANCE ON FLANGES IS ± 1/32

LENGTHS OF AN, NAS & MS AL ALY RIVETS SHORTER THAN 1 INCH ARE NOT SPECIFIED.

TOLERANCE ON LOFTED DELINEATIONS IS

DWG SIZE 34 X 88

C

B

A

LDW280-52658 B

02/02

NAS 9-1100

CODE IDENT NO 26512
LDW280-52658 SH 6

GRUMMAN AIRCRAFT ENGRG CORP., BETHPAGE, L. I., NEW YORK

MODEL OR END ITEM	SIZE	CODE IDENT NO.		
LM	J	26512	LDW280-52658	B

SCALE FULL
SHEET 6.00

23 FOR PHOTO REPRODUCTION
THIS IS AN ORIGINAL DRAWING

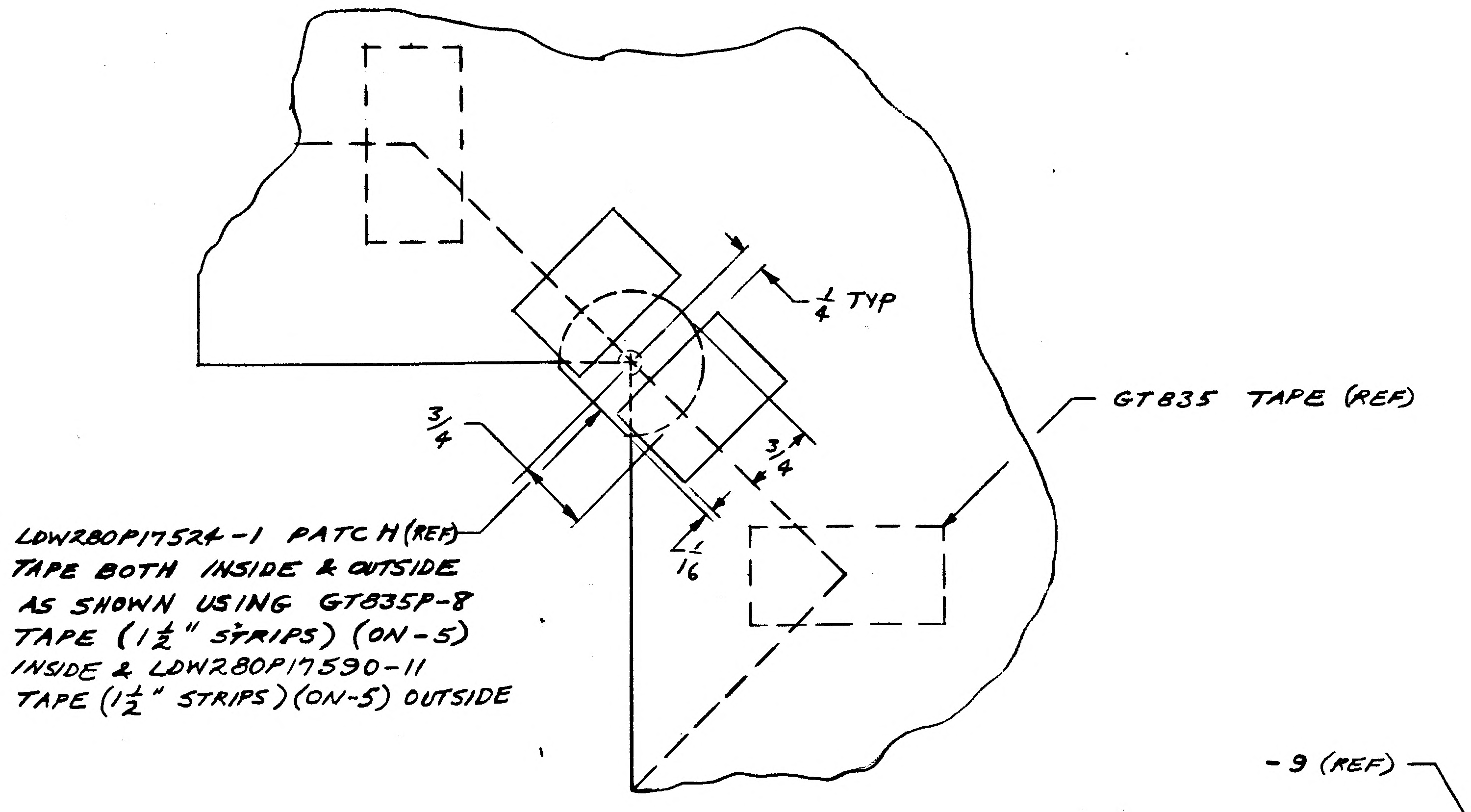
1/4 TYP
3/4
3/4
1/16
GT835 TAPE (REF)
LDW280P17524-1 PATCH (REF)
TAPE BOTH INSIDE & OUTSIDE
AS SHOWN USING GT835P-8
TAPE (1 1/2" STRIPS) (ON-5)
INSIDE & LDW280P17590-11
TAPE (1 1/2" STRIPS) (ON-5) OUTSIDE

(ADD)
DETAIL Ω

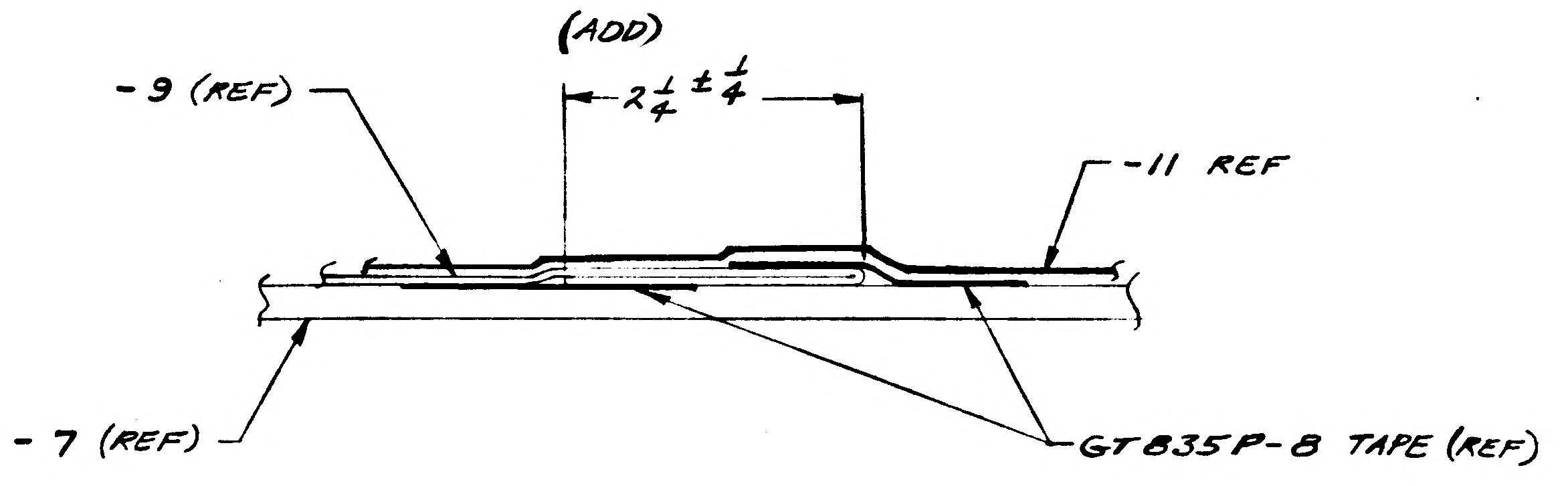
(ADD)
2 1/4 ± 1/4
-9 (REF)
-11 REF
-7 (REF)
GT835P-8 TAPE (REF)

(ADD)
SECTION *-*

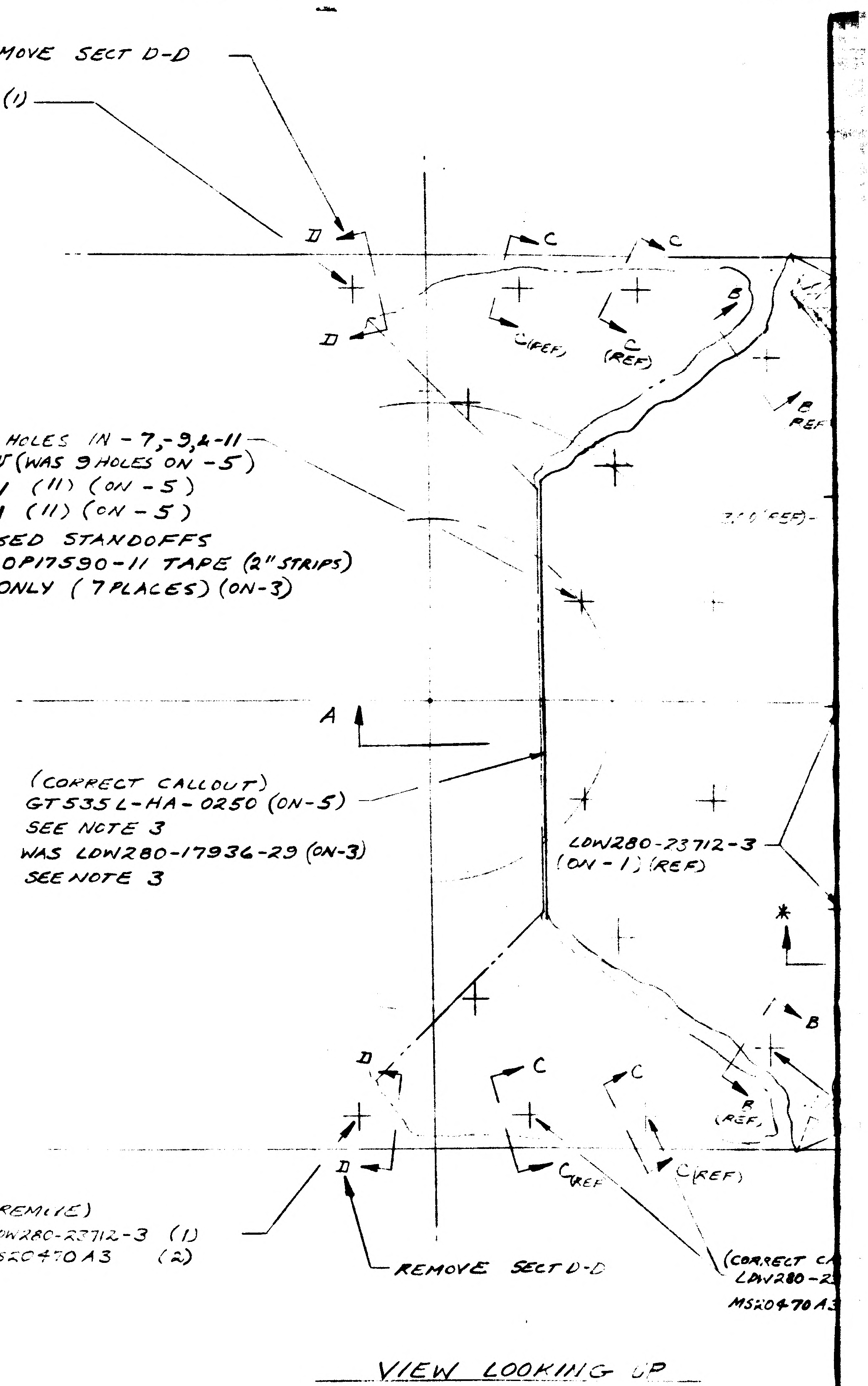
(REMOVE)
LDW280-23712-3 (1)
MS20470 A3 (2)
REMOVE SECT D-D
D
D
C
C
C (REF)
C (REF)
B
B REF
3/8 DIA 9 HOLES IN -7, -9, & -11
SEE NOTE Ψ (WAS 9 HOLES ON -5)
ADD { GW10H-1 (11) (ON -5)
GB10J-1 (11) (ON -5)
COVER EXPOSED STANDOFFS
WITH LDW280P17590-11 TAPE (2" STRIPS)
NEAR SIDE ONLY (7 PLACES) (ON-3)
A
(CORRECT CALLOUT)
GT535L-HA-0250 (ON-5)
SEE NOTE 3
WAS LDW280-17936-29 (ON-3)
SEE NOTE 3
LDW280-23712-3
(ON-1) (REF)
*
B
D
C
C
B (REF)
D
C REF
C (REF)
(REMOVE)
LDW280-23712-3 (1)
MS20470A3 (2)
REMOVE SECT D-D
(CORRECT CA
LDW280-2
MS20470A3

VIEW LOOKING UP
SHT 6 (REF)

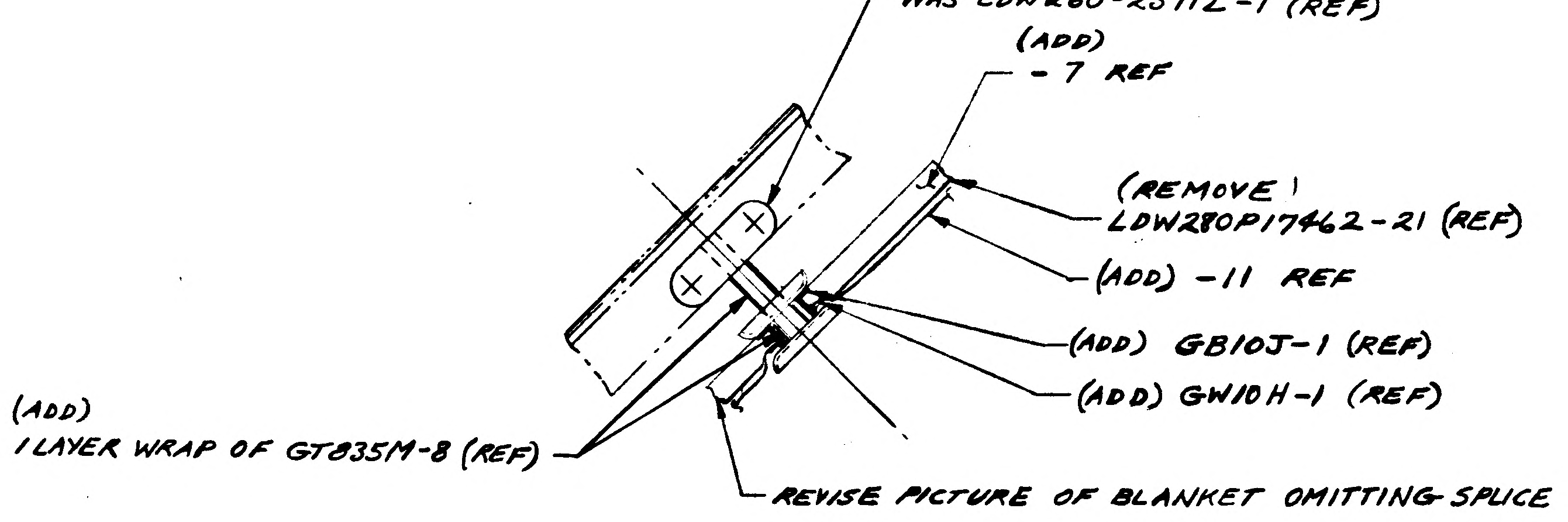
LDW280-23712-3 (REF)
WAS LDW280-23712-1 (REF)
(ADD)
-7 REF
(REMOVE)
LDW280P17462-21 (REF)
(ADD) -11 REF
(ADD) GB10J-1 (REF)
(ADD) GW10H-1 (REF)
(ADD)
1 LAYER WRAP OF GT835M-8 (REF)
REVISE PICTURE OF BLANKET OMITTING SPLICE

SECTION B-B (REF)
REVISIONS SHOWN TYP FOR SECT. J-J

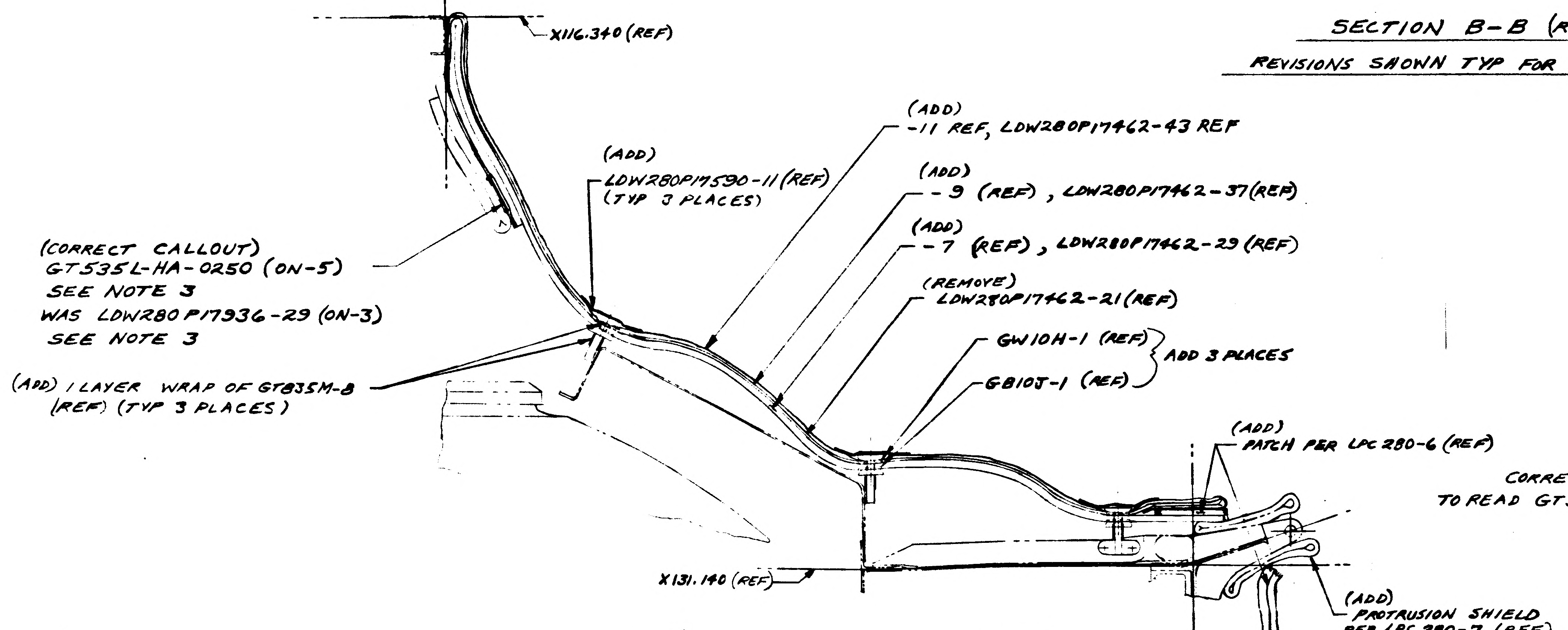
(CORRECT CALLOUT)
-Z 60.695 WAS -Y 60.695
X116.340 (REF)
(ADD)
-11 REF, LDW280P17462-43 REF
(ADD)
LDW280P17590-11 (REF)
(TYP 3 PLACES)
(ADD)
-9 (REF), LDW280P17462-37 (REF)
(ADD)
-7 (REF), LDW280P17462-29 (REF)
(CORRECT CALLOUT)
GT535L-HA-0250 (ON-5)
SEE NOTE 3
WAS LDW280P17936-29 (ON-3)
SEE NOTE 3
(REMOVE)
LDW280P17462-21 (REF)
GW10H-1 (REF)
GB10J-1 (REF)
ADD 3 PLACES
(ADD) 1 LAYER WRAP OF GT835M-8
(REF) (TYP 3 PLACES)
(ADD)
PATCH PER LPC 280-6 (REF)
X131.140 (REF)
(ADD)
PROTRUSION SHIELD
PER LPC 280-7 (REF)

SECTION A-A (REF)
REVISE AS SHOWN

(CORRECT CALLOUT)
-Z 81.00 (REF) WAS -Y 81.00 (REF)

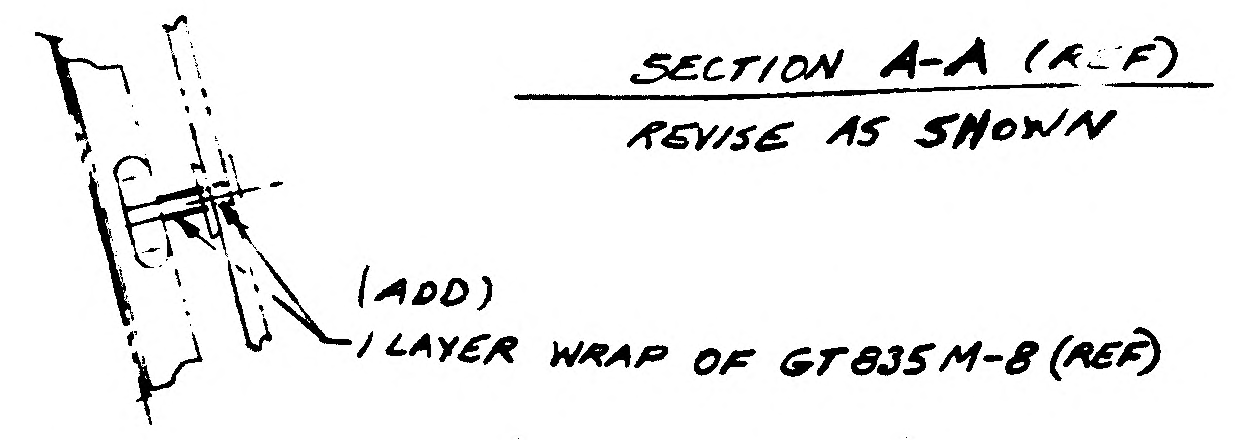
(ADD)
1 LAYER WRAP OF GT835M-8 (REF)

SECTION C-C (REF)
D-D (OPP) (ZONE 28A)
REMOVE

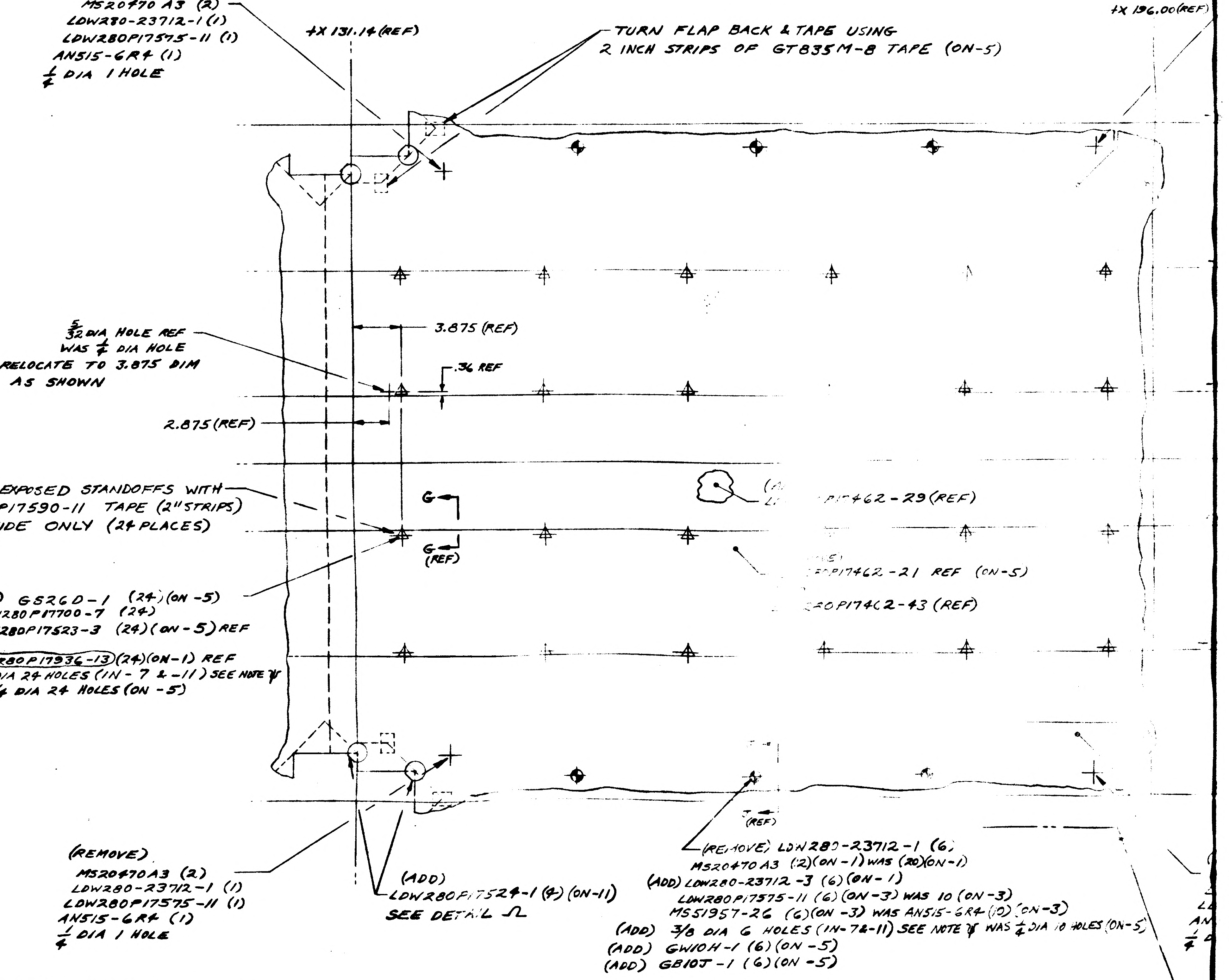
(REMOVE)
MS20470 A3 (2)
LDW280-23712-1 (1)
LDW280P17575-11 (1)
AN515-6R4 (1)
1/4 DIA 1 HOLE
+X 131.14 (REF)
TURN FLAP BACK & TAPE USING
2 INCH STRIPS OF GT835M-8 TAPE (ON-5)
+X 196.00 (REF)
5/32 DIA HOLE REF
WAS 1/4 DIA HOLE
RELOCATE TO 3.875 DIM
AS SHOWN
3.875 (REF)
.36 REF
2.875 (REF)
COVER EXPOSED STANDOFFS WITH
LDW280P17590-11 TAPE (2" STRIPS)
NEAR SIDE ONLY (24 PLACES)
(ON-3)
G
G (REF)
P17462-29 (REF)
P17462-21 REF (ON-5)
P17462-43 (REF)
(ADD) GS26D-1 (24) (ON -5)
(REMOVE) LDW280P17700-7 (24)
LDW280P17523-3 (24) (ON-5) REF
CORRECT CALLOUT TO
TO READ GT535G-LAS-0004
LDW280P17936-13 (24) (ON-1) REF
5/32 DIA 24 HOLES (IN -7 & -11) SEE NOTE Ψ
WAS 1/4 DIA 24 HOLES (ON -5)
(REMOVE)
MS20470A3 (2)
LDW280-23712-1 (1)
LDW280P17575-11 (1)
AN515-6R4 (1)
1/4 DIA 1 HOLE
(ADD)
LDW280P17524-1 (4) (ON-11)
SEE DETAIL Ω
(REF)
(REMOVE) LDW280-23712-1 (6)
MS20470A3 (2) (ON-1) WAS (20) (ON-1)
(ADD) LDW280-23712-3 (6) (ON-1)
LDW280P17575-11 (6) (ON-3) WAS 10 (ON-3)
MS51957-26 (6) (ON-3) WAS AN515-6R4 (10) (ON-3)
(ADD) 3/8 DIA 6 HOLES (IN-7 & -11) SEE NOTE Ψ WAS 1/4 DIA 10 HOLES (ON-5)
(ADD) GW10H-1 (6) (ON-5)
(ADD) GB10J-1 (6) (ON-5)

01/03

NAS 9-1100

VIEW LOOKING FWD SHT 5 (REF)

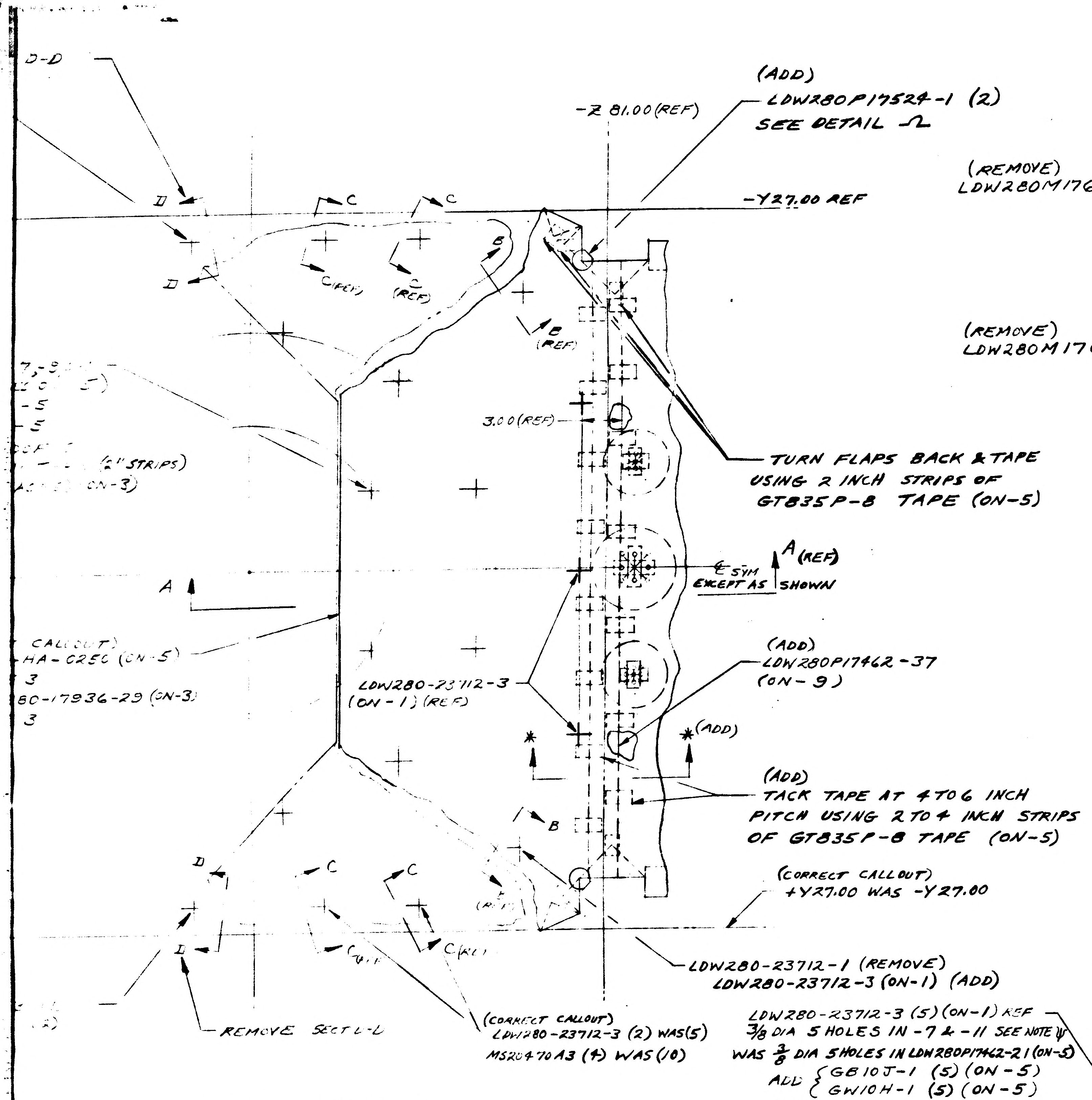

D-D
(ADD)
LDW280P17524-1 (2)
SEE DETAIL Ω
-Z 81.00 (REF)
-Y27.00 REF
C
C
D
D
B
C(REF)
E
E(REF)
3.00 (REF)
TURN FLAPS BACK & TAPE USING 2 INCH STRIPS OF GT835P-8 TAPE (ON-5)
A(REF)
5(H) EXCEPT AS SHOWN
A
(ADD)
LDW280P17462-37
(ON-9)
LDW280-23712-3 (ON-1) (REF)
(ADD)
(ADD)
TACK TAPE AT 4 TO 6 INCH PITCH USING 2 TO 4 INCH STRIPS OF GT835P-8 TAPE (ON-5)
B
(CORRECT CALLOUT)
+Y27.00 WAS -Y27.00
C
C
L
L
LDW280-23712-1 (REMOVE)
LDW280-23712-3 (ON-1) (ADD)
REMOVE SECT L-L
(CORRECT CALLOUT)
LDW280-23712-3 (2) WAS (5)
MS20470A3 (4) WAS (10)
2" STRIPS)
(ON-3)
CALLOUT
-HA-0250 (ON-5)
3
80-17936-29 (ON-3)
3

VIEW LOOKING UP SHT 6 (REF)

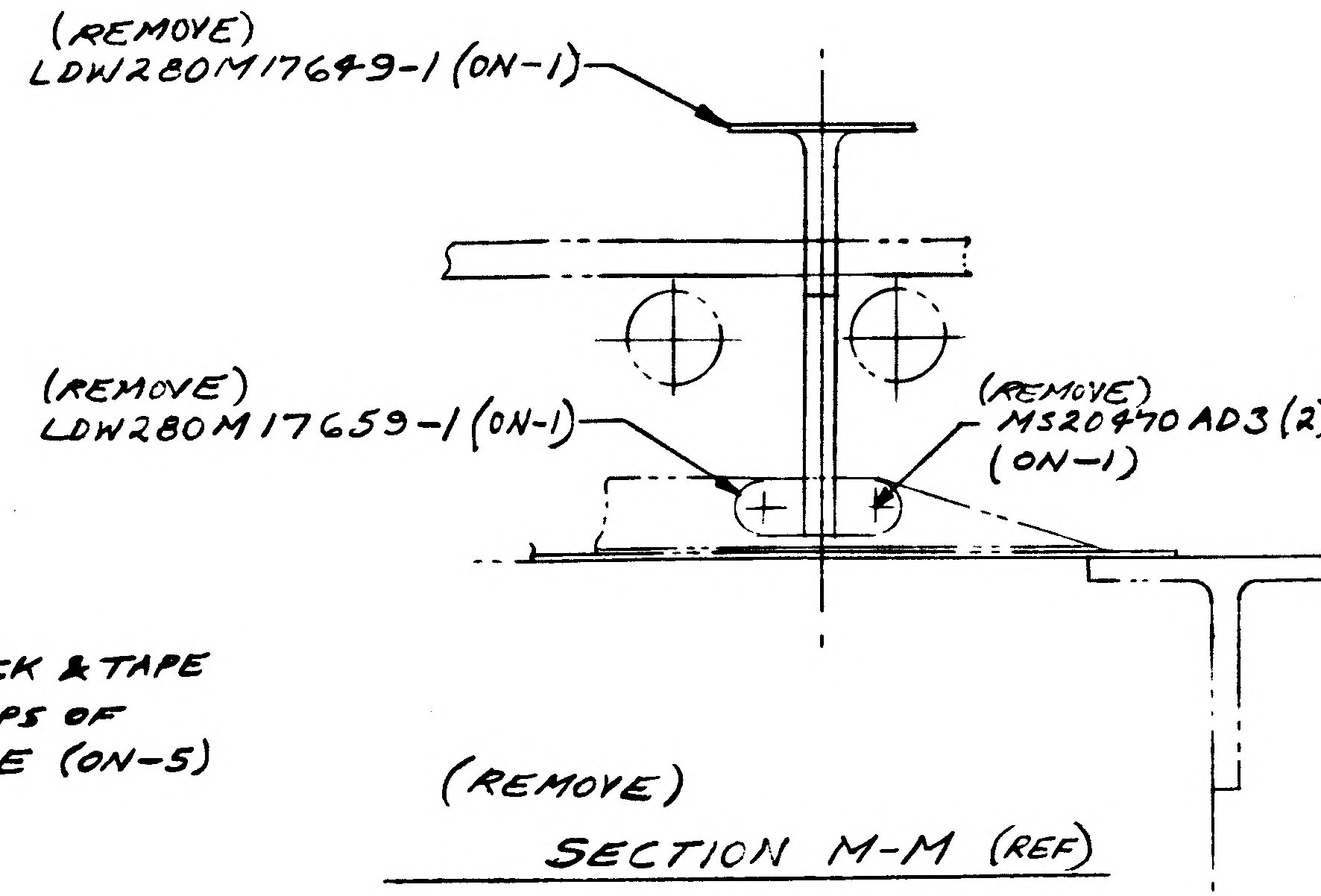

(REMOVE)
LDW280M17649-1 (ON-1)
(REMOVE)
LDW280M17659-1 (ON-1)
(REMOVE)
MS20470AD3 (2)
(ON-1)

(REMOVE)
SECTION M-M (REF)

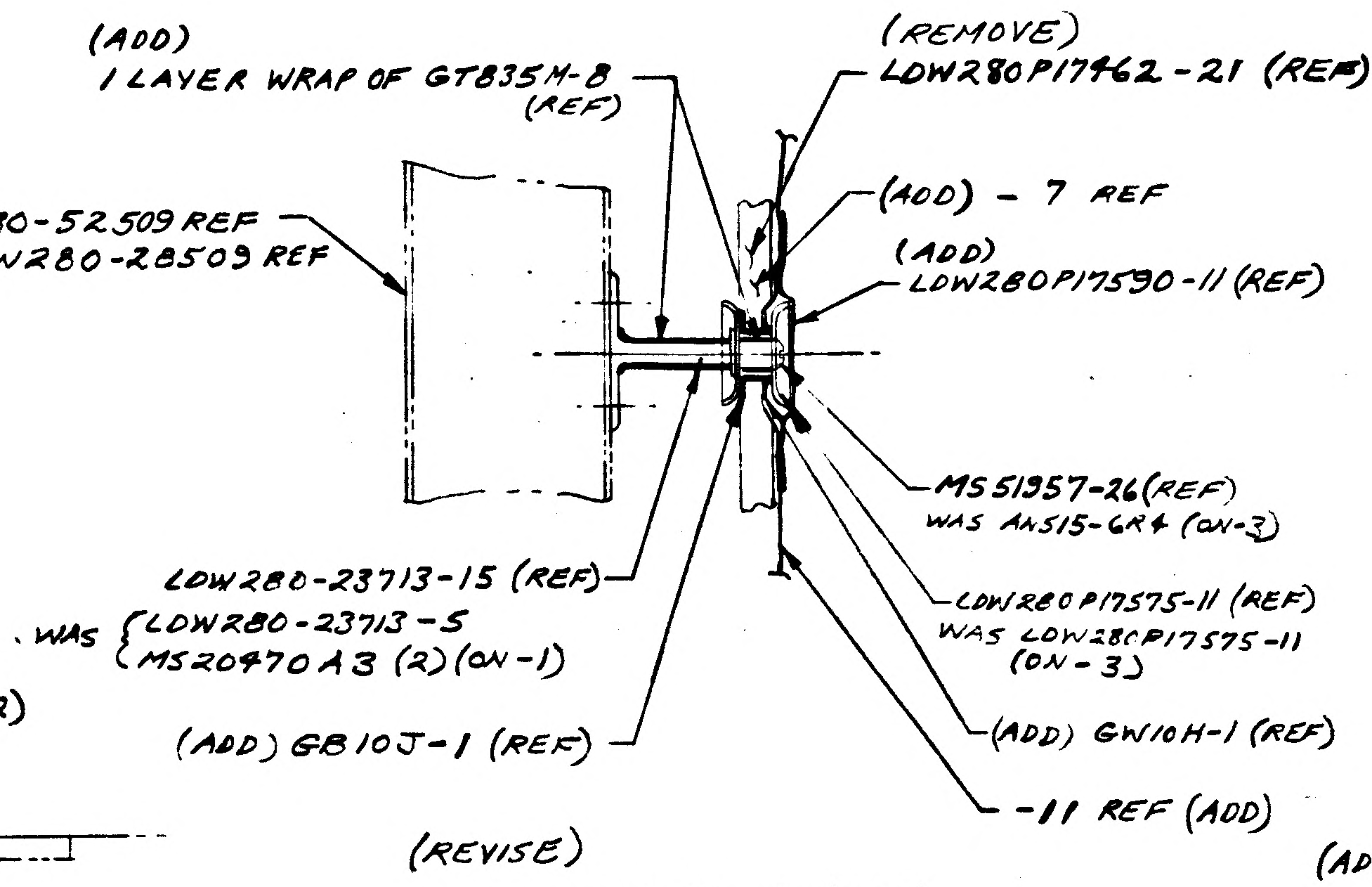

(ADD)
1 LAYER WRAP OF GT835M-8 (REF)
(REMOVE)
LDW280P17462-21 (REF)
(ADD) LDW280-52509 REF
(REMOVE) LDW280-28509 REF
(ADD) -7 REF
(ADD)
LDW280P17590-11 (REF)
MS51957-26 (REF)
WAS AN515-6R4 (ON-3)
LDW280-23713-15 (REF)
WAS LDW280-23713-5
MS20470A3 (2) (ON-1)
LDW280P17575-11 (REF)
WAS LDW280P17575-11 (ON-3)
(ADD) GW10H-1 (REF)
(ADD) GB10J-1 (REF)
-11 REF (ADD)

(REVISE)
SECTION R-R (REF)

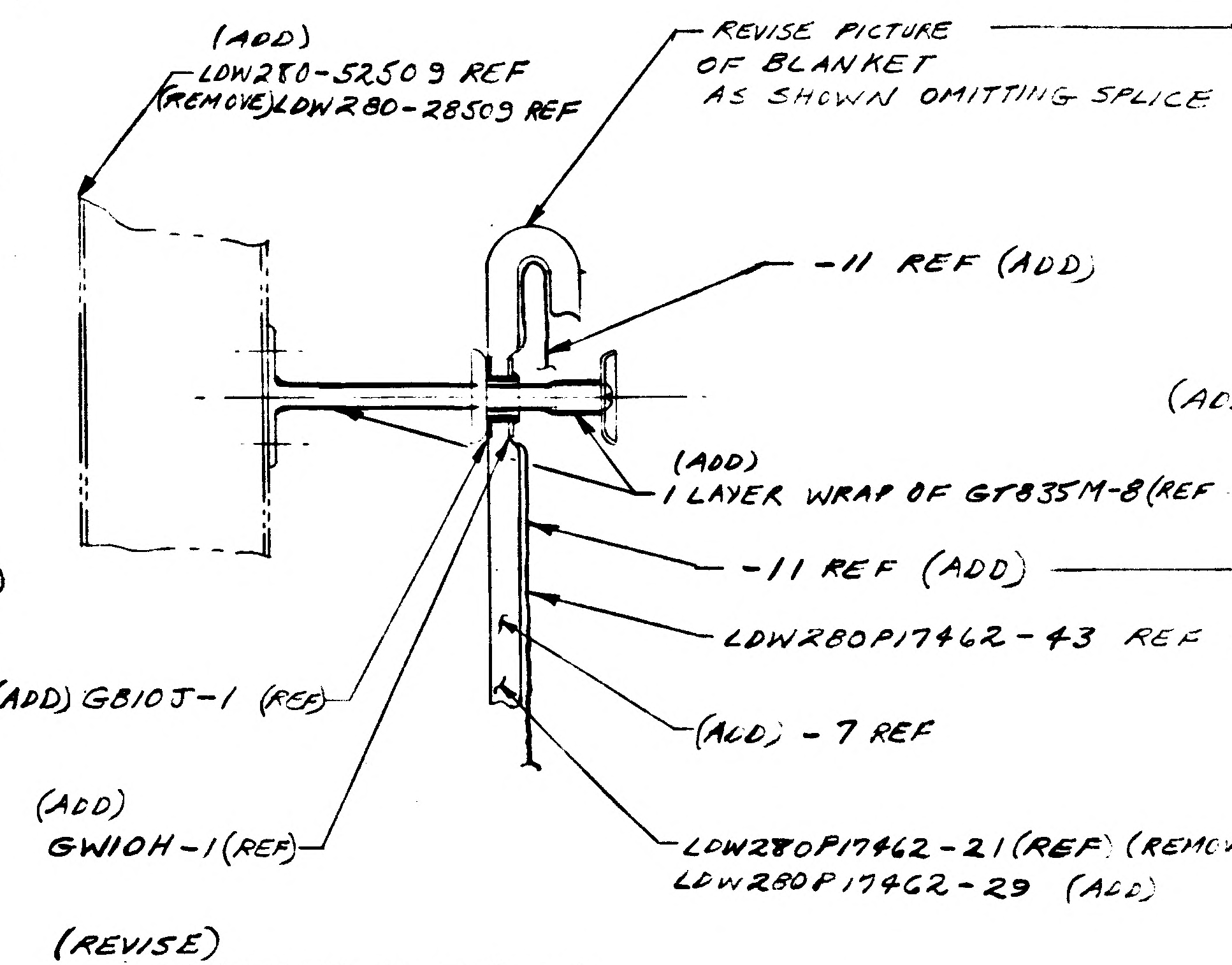

(ADD)
LDW280-52509 REF
(REMOVE) LDW280-28509 REF
REVISE PICTURE OF BLANKET AS SHOWN OMITTING SPLICE
-11 REF (ADD)
(ADD)
1 LAYER WRAP OF GT835M-8 REF
-11 REF (ADD)
LDW280P17462-43 REF (ADD)
(ADD) GB10J-1 (REF)
(ADD) -7 REF
(ADD)
GW10H-1 (REF)
LDW280P17462-21 (REF) (REMOVE)
LDW280P17462-29 (ADD)

(REVISE)
SECTION N-N (REF)

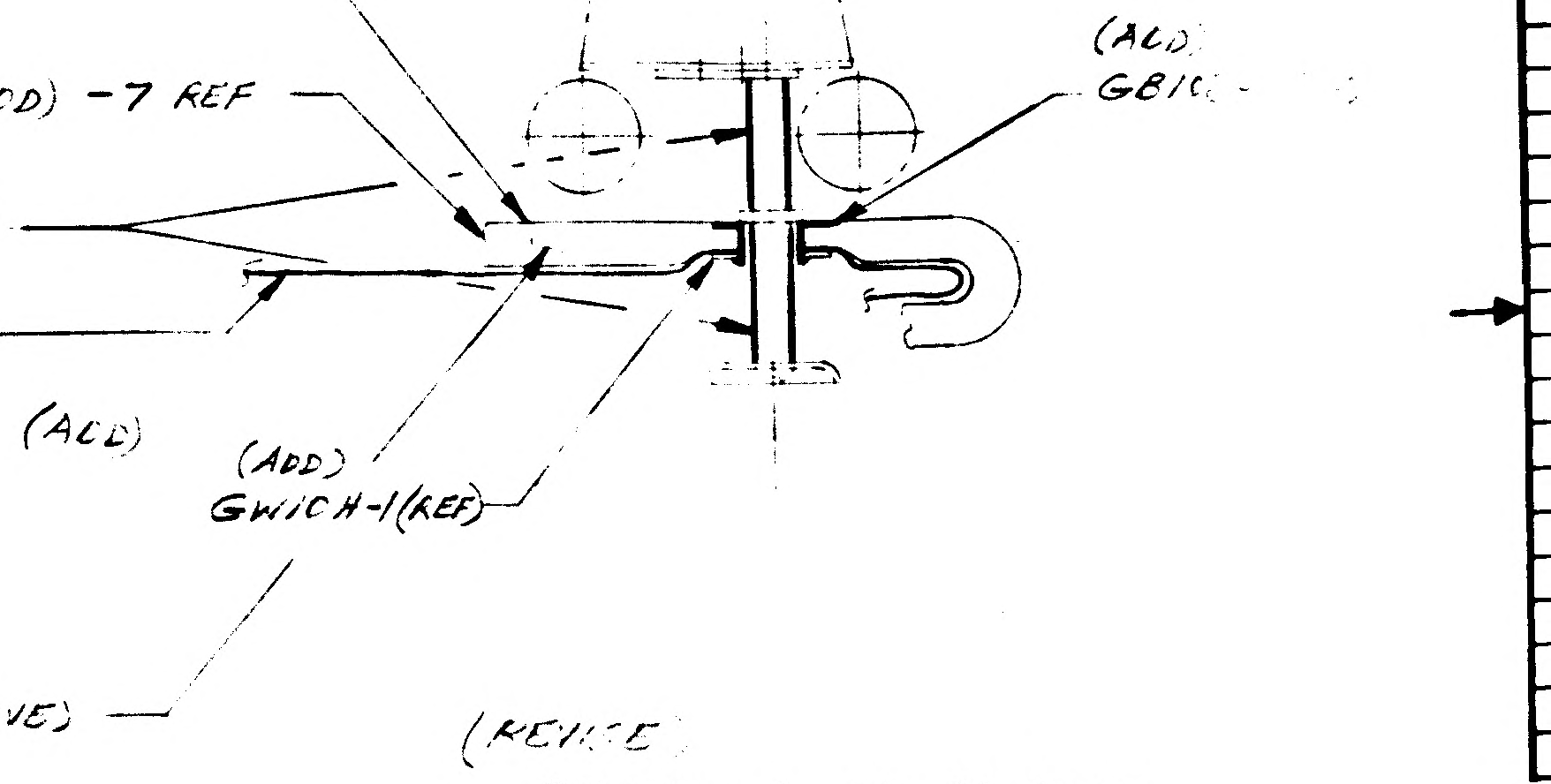

(ADD) -7 REF
(ADD)
GB10J
(ADD)
GW10H-1 (REF)

(REVISE
SECTION K-K REF

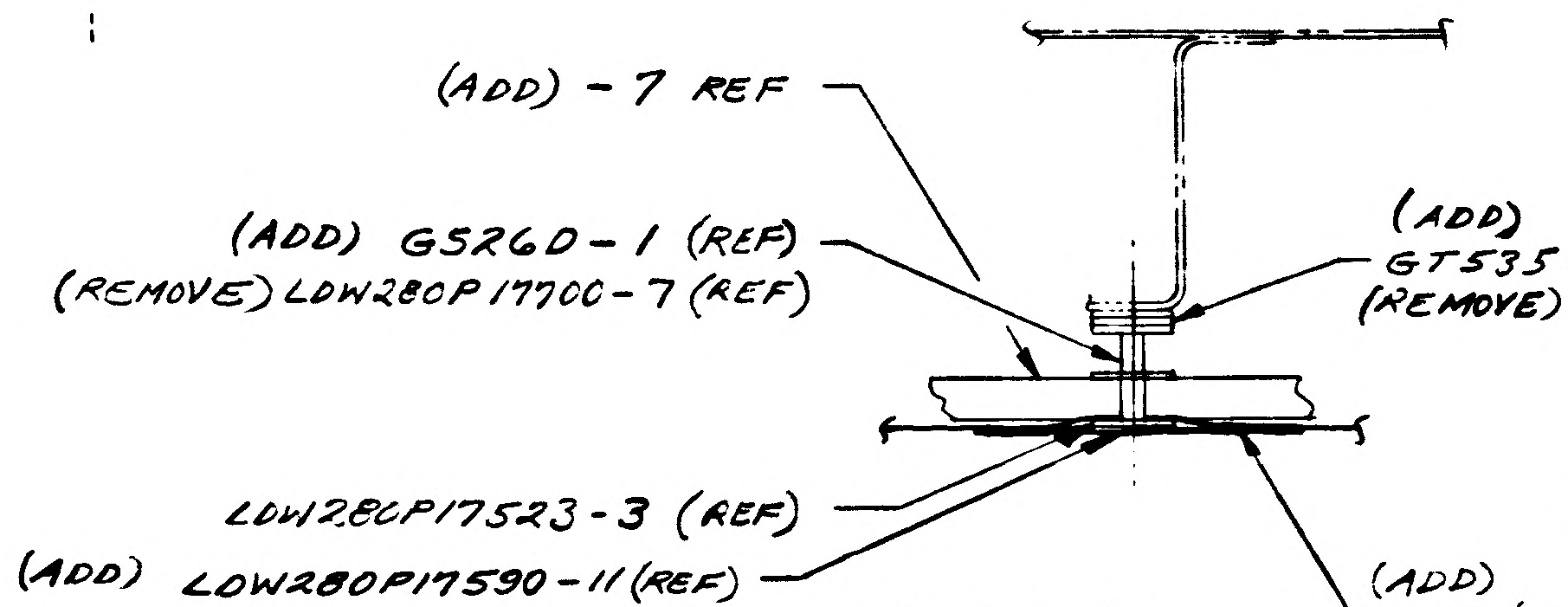

(ADD) -7 REF
(ADD) GS26D-1 (REF)
(REMOVE) LDW280P17700-7 (REF)
(ADD)
GT535G-LAS-0004 REF
(REMOVE) LDW280-17936-13 REF
LDW280P17523-3 (REF)
(ADD) LDW280P17590-11 (REF)
(ADD)
-11 (REF)

(REVISE)
SECTION L-L

REVISIONS SHOWN ABOVE
TYP FOR SECT. G-G

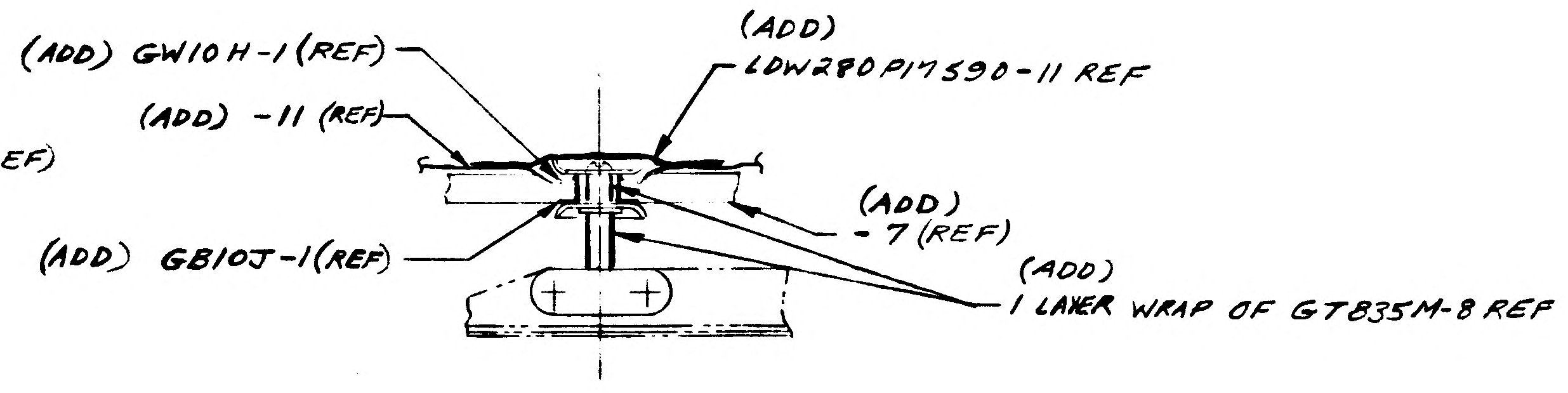

(ADD) GW10H-1 (REF)
(ADD) -11 (REF)
(ADD) GB10J-1 (REF)
(ADD)
LDW280P17590-11 REF
(ADD)
-7 (REF)
(ADD)
1 LAYER WRAP OF GT835M-8 REF

(REVISE)
SECTION P-P

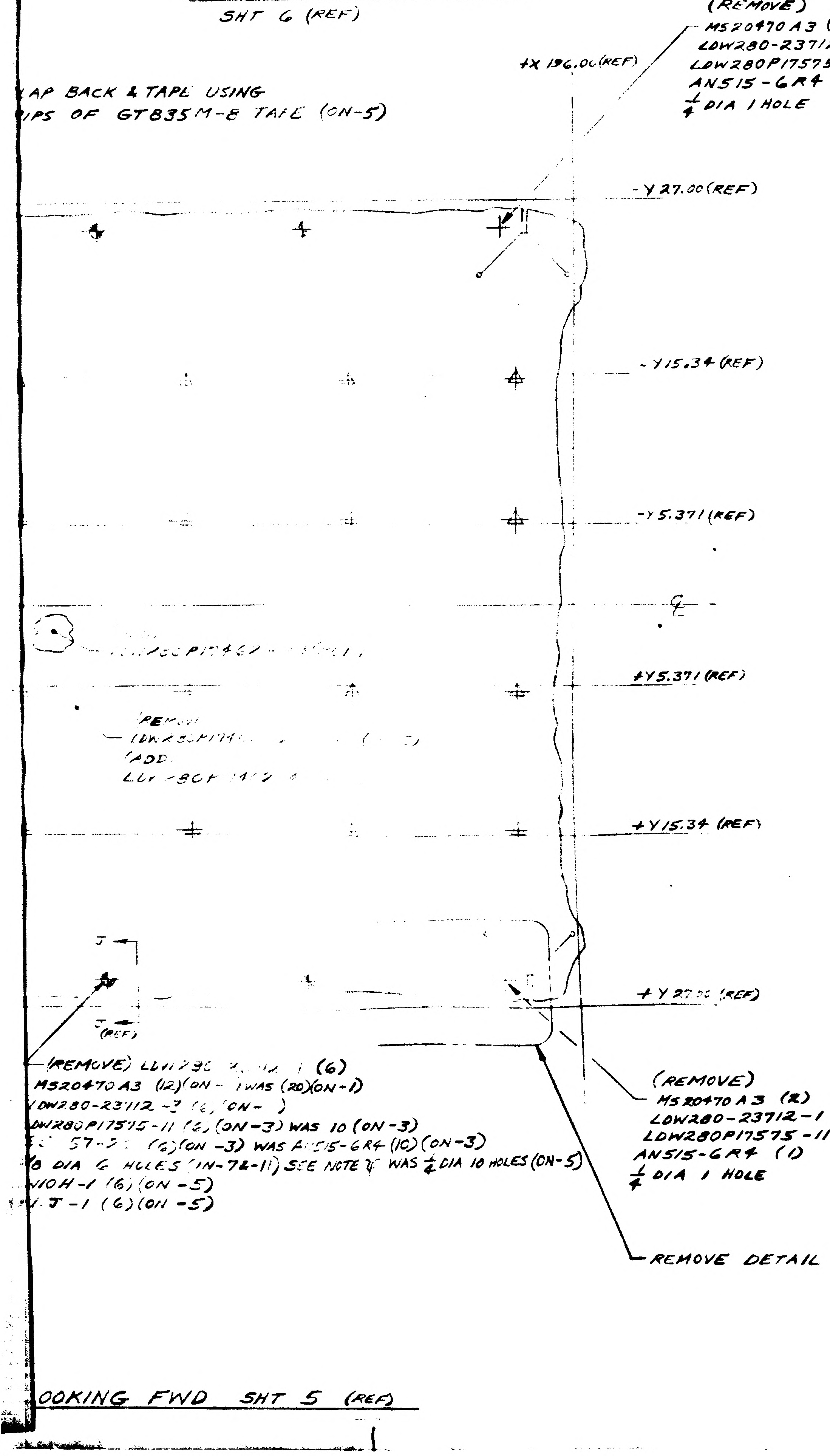

AP BACK & TAPE USING
IPS OF GT835M-8 TAPE (ON-5)
-Y27.00 (REF)
-Y15.34 (REF)
-Y5.371 (REF)
G
+Y5.371 (REF)
+Y15.34 (REF)
+Y27.00 (REF)
J
J(REF)
(REMOVE)
MS20470A3 (2)
LDW280-23712-1 (1)
LDW280P17575-11 (1)
AN515-6R4 (1)
1/4 DIA 1 HOLE
+X 196.00 (REF)
(REMOVE) LDW280-23712-1 (6)
MS20470A3 (12) (ON-1) WAS (30) (ON-1)
LDW280-23712-3 (ON-)
LDW280P17575-11 (6) (ON-3) WAS 10 (ON-3)
(6) (ON-3) WAS AN515-6R4 (10) (ON-3)
3/8 DIA 6 HOLES IN -7 & -11 SEE NOTE Ψ WAS 1/4 DIA 10 HOLES (ON-5)
GW10H-1 (6) (ON-5)
GB10J-1 (6) (ON-5)
(REMOVE)
MS20470A3 (2)
LDW280-23712-1 (1)
LDW280P17575-11 (1)
AN515-6R4 (1)
1/4 DIA 1 HOLE
REMOVE DETAIL "F"

LOOKING FWD SHT 5 (REF)

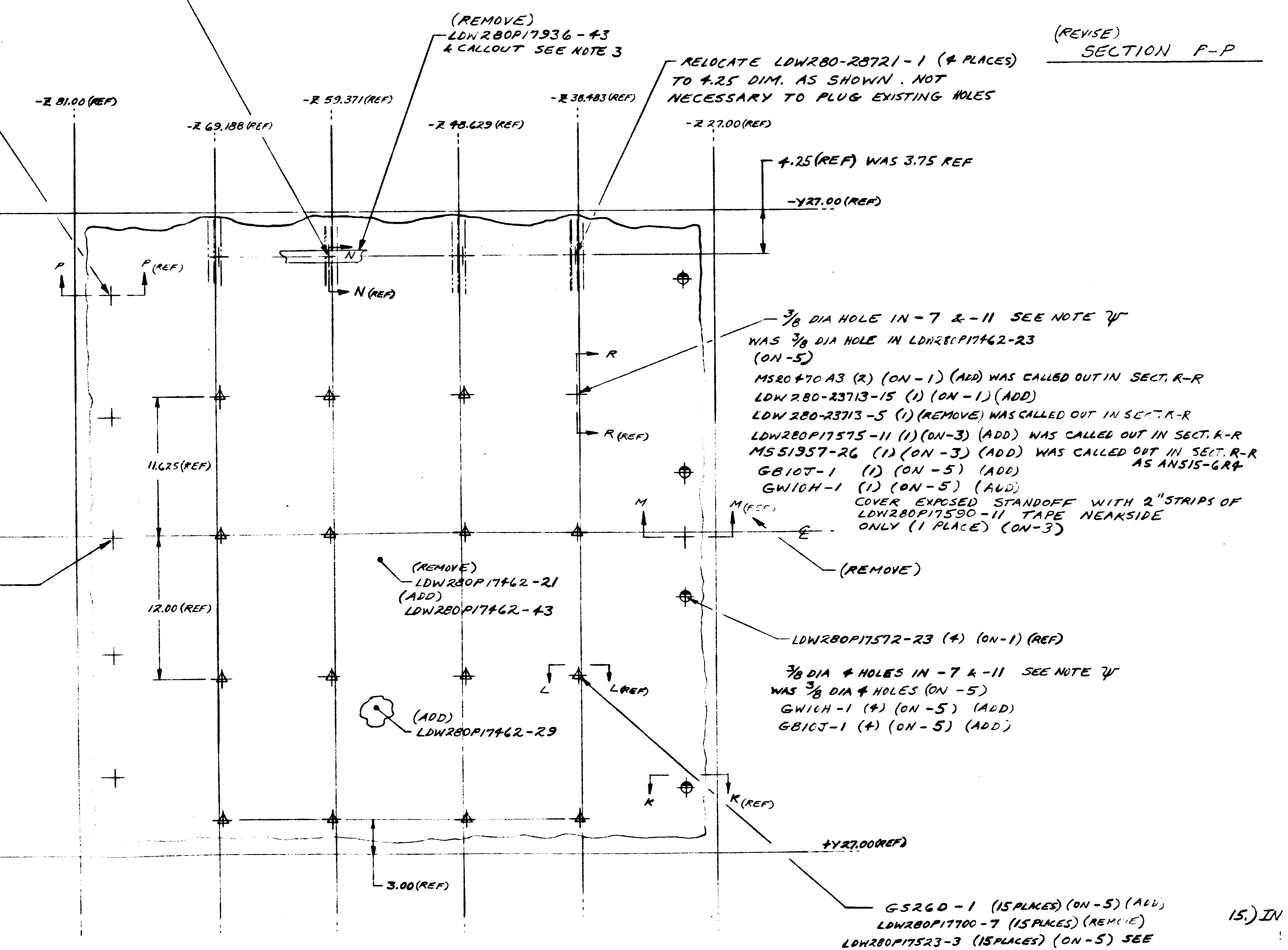

LDW280-23712-3 (5) (ON-1) REF
3/8 DIA 5 HOLES IN -7 & -11 SEE NOTE Ψ
WAS 3/8 DIA 5 HOLES IN LDW280P17462-21 (ON-5)
ADD GB10J-1 (5) (ON-5)
GW10H-1 (5) (ON-5)
COVER EXPOSED STANDOFFS WITH LDW280P17590-11 TAPE 2" STRIPS NEAR SIDE ONLY 5 PLACES (ON-3)
3/8 DIA 4 HOLES IN -7 & -11 SEE NOTE Ψ
WAS 3/8 DIA 4 HOLES IN LDW280P17462-21 (ON-5)
ADD GB10J-1 (4) (ON-5)
GW10H-1 (4) (ON-5)
(REMOVE)
LDW280P17936-43
& CALLOUT SEE NOTE 3
RELOCATE LDW280-28721-1 (4 PLACES) TO 4.25 DIM. AS SHOWN. NOT NECESSARY TO PLUG EXISTING HOLES
-Z 81.00 (REF)
-Z 69.188 (REF)
-Z 59.371 (REF)
-Z 48.629 (REF)
-Z 38.483 (REF)
-Z 27.00 (REF)
4.25 (REF) WAS 3.75 REF
-Y27.00 (REF)
P
P(REF)
N
N(REF)
3/8 DIA HOLE IN -7 & -11 SEE NOTE Ψ
WAS 3/8 DIA HOLE IN LDW280P17462-23 (ON-5)
MS20470A3 (2) (ON-1) (ADD) WAS CALLED OUT IN SECT. R-R
LDW280-23713-15 (1) (ON-1) (ADD)
LDW280-23713-5 (1) (REMOVE) WAS CALLED OUT IN SECT. R-R
LDW280P17575-11 (1) (ON-3) (ADD) WAS CALLED OUT IN SECT. R-R
MS51957-26 (1) (ON-3) (ADD) WAS CALLED OUT IN SECT. R-R AS AN515-6R4
GB10J-1 (1) (ON-3) (ADD)
GW10H-1 (1) (ON-5) (ADD)
COVER EXPOSED STANDOFF WITH 2" STRIPS OF LDW280P17590-11 TAPE NEAKSIDE ONLY (1 PLACE) (ON-3)
R
R(REF)
11.625 (REF)
12.00 (REF)
M
M(REF)
℄
(REMOVE)
(REMOVE)
LDW280P17462-21
(ADD)
LDW280P17462-43
LDW280-23712-3 (REF)
LDW280P17572-23 (4) (ON-1) (REF)
GW10H-1 (4) (ON-5) (ADD)
GB10J-1 (4) (ON-5) (ADD)
L
L(REF)
(ADD)
LDW280P17462-29
K
K(REF)
+Y27.00 (REF)
3.00 (REF)

GS26D-1 (15 PLACES) (ON-5) (ADD)
LDW280P17700-7 (15 PLACES) (REMOVE)
LDW280P17523-3 (15 PLACES) (ON-5) SEE NOTE 2 (REF)
5/32 DIA 15 HOLES (IN -7 & -11) SEE NOTE Ψ
WAS 1/4 DIA 15 HOLES (ON-5, IN LDW280P17462-1 (REF)
CORRECT CALLOUT { GT535G-LAS-0004 (ON-1) 15 PLACES SEE NOTE "1 WAS LDW280-17936-13 (ON-1) ETC.
COVER EXPOSED STANDOFFS WITH 2" STRIPS OF LDW280P17590-11 TAPE NEAR SIDE ONLY (15 PLACES) (ON-3)

02703 NAS 9-1100

(REMOVE) { LDW280-28658-1 INSTL
LDW280-28658-3 INSTL
LDW280-28658-5 ASSY

ADD { LDW280-52658-1 INSTL
LDW280-52658-3 INSTL
LDW280-52658-5 ASSY
LDW280-52658-7
LDW280-52658-9
LDW280-52658-11

VIEW LOOKING DOWN SHT 3 & 4 (REF)

1.) CREATE -1, -3, -5, -7, -9, & -11 I&T EXEMPT
2.) IN B/M ADD GS577A-1 STAPLE, GT835P-8, GT835M-8; GT535B-2-1.00, & LDW280P17590-11 TAPE (AS REQ'D) (ON-5)
3.) IN F/D & B/M REMOVE LDW280P17936-43 & -47 TAPE
4.) IN F/D REMOVE DETAIL "F" & SECTION H-H
5.) IN B/M ADD LDW280P17590-11 TAPE AS REQ'D ON-3
6.) IN F/D & B/M REMOVE LDW280P17462-21 & ADD LDW280P17462-29, -37 & -43
7.) IN F/D & B/M CORRECT CALLOUT FOR VELCRO TAPE GT535G-LAS-0004 REPLACES LDW280P17936-13 & GT535L-HA-0250 REPLACES LDW280P17936-29
8.) BREAK BLANKET PICTURE AT EDGES OMITTING PICTURE OF SPL[illegible] DETAILS OF SPLICE TO BE SHOWN ON MATING BLANKET
9.) REMOVE ALL LDW280-28509 REF CALLOUTS & REPLACE WITH LDW280-52509 REF CORRECT PICTURE OF REF STRUCTURE TO AGREE
10.) REVISE NOTE #2 TO READ: FASTEN LDW280P17523-3 TO GS26D-1 PER LPC280-14
11.) REVISE NOTE #3 TO READ: SEW GT535-HA-0250 TO -5 AT 3/16 [illegible] FROM EDGES OF GT535L-HA-0250 IN ACCORDANCE WITH FED STD [illegible] & STITCH TYPE 301
12.) REMOVE NOTE #4
13.) ADD NOTE δ FABRICATE -5 BLANKET ASSY PER LPC280-1
14.) ADD NOTE Ψ ALL ALUMINIZED MYLAR PARTS SHALL HAVE HOLE PATTERNS LOCATED WITH EXPANDED DIMS. THE EXPANSION RATIO IS TO BE .050 IN/IN (e.g. 10.000 SHOWN EXPANDS TO 10.500)
ALL ALUMINIZED POLYIMIDE PARTS SHALL HAVE HOLE PATTERNS LOCA[illegible] WITH EXPANDED DIMS THE EXPANSION RATIO IS TO BE .070 IN/IN (e.g. 10.000 SHOWN EXPANDS TO 10.700)
15.) IN F/D WRAP STEMS OF ALL LDW280-28721-1, LDW280-23712-3, LDW280-23713-15, & LDW280P17572-23 STANDOFFS WITH GT835M-8 TAPE (1 LAYER) (ON-1)
16.) IN F/D & B/M REMOVE ALL AN515-6R4 SCREWS & REPLACE WITH MS51957-26 SCREWS

δ, Ψ, ——— USE NEXT AVAILABLE NOTE NO.

✱-✱, Ω ——— USE NEXT AVAILABLE SECTION LETTER

⌖, ⊕, ⊕ ——— THESE SYMBOLS ARE FOR IDENTIFICATION OF STANDOFF TYPE ON E.O. ONLY DO NOT ADD TO DWG

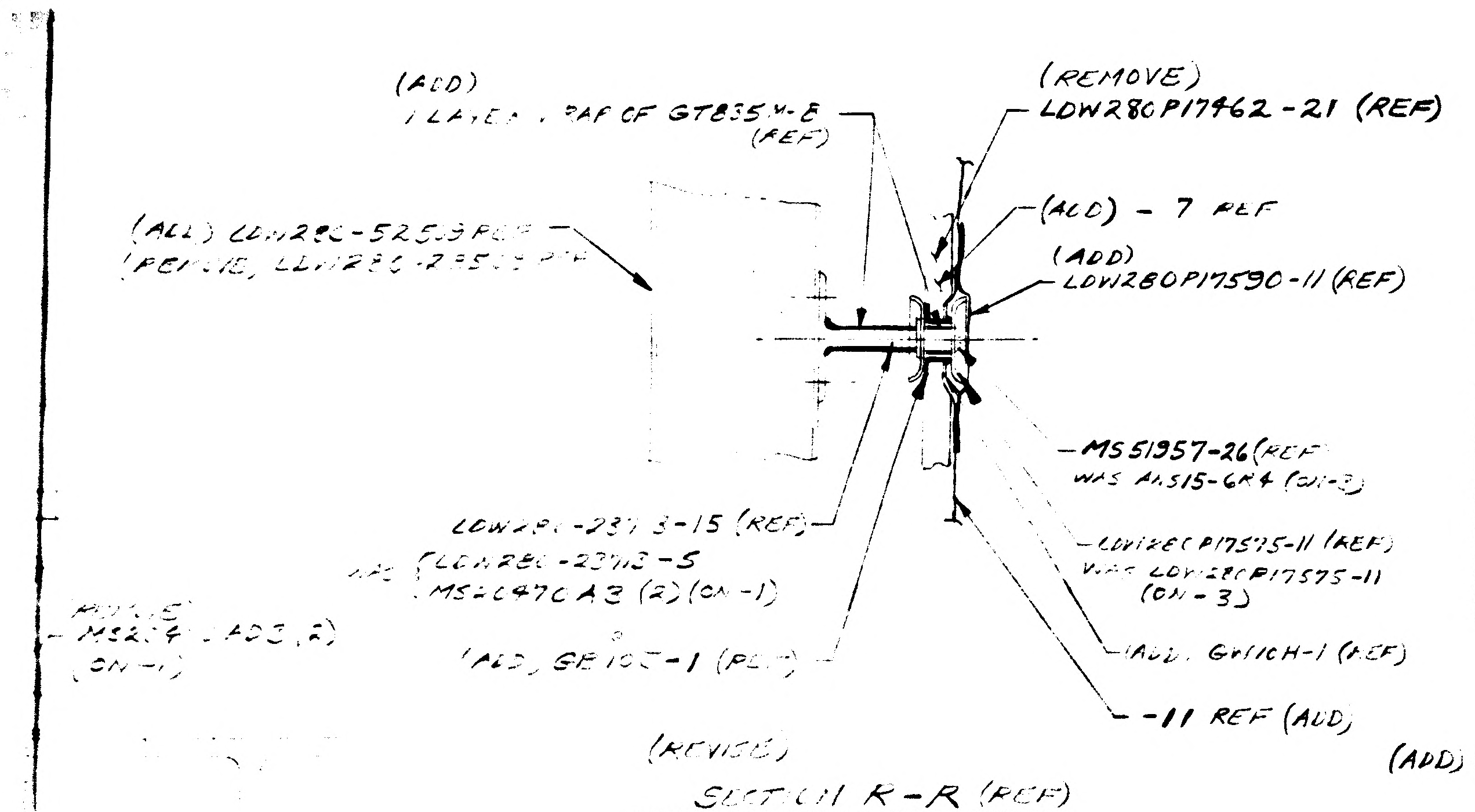
(ADD)
1 LAYER WRAP OF GT835M-8 (REF)
(REMOVE)
LDW280P17462-21 (REF)
(ALL) LDW280-52509 REF
(REMOVE) LDW280-28509 REF
(ADD) - 7 REF
(ADD)
LDW280P17590-11 (REF)
-MS51957-26 (REF)
WAS AN515-6R4 (ON-3)
LDW280-23713-15 (REF)
WAS {LDW280-23713-5
MS20470A3 (2) (ON-1)
LDW280P17575-11 (REF)
WAS LDW280P17575-11
(ON-3)
(ADD) GW10H-1 (REF)
(ADD) GB10J-1 (REF)
-11 REF (ADD)
(REVISE)
SECTION R-R (REF)

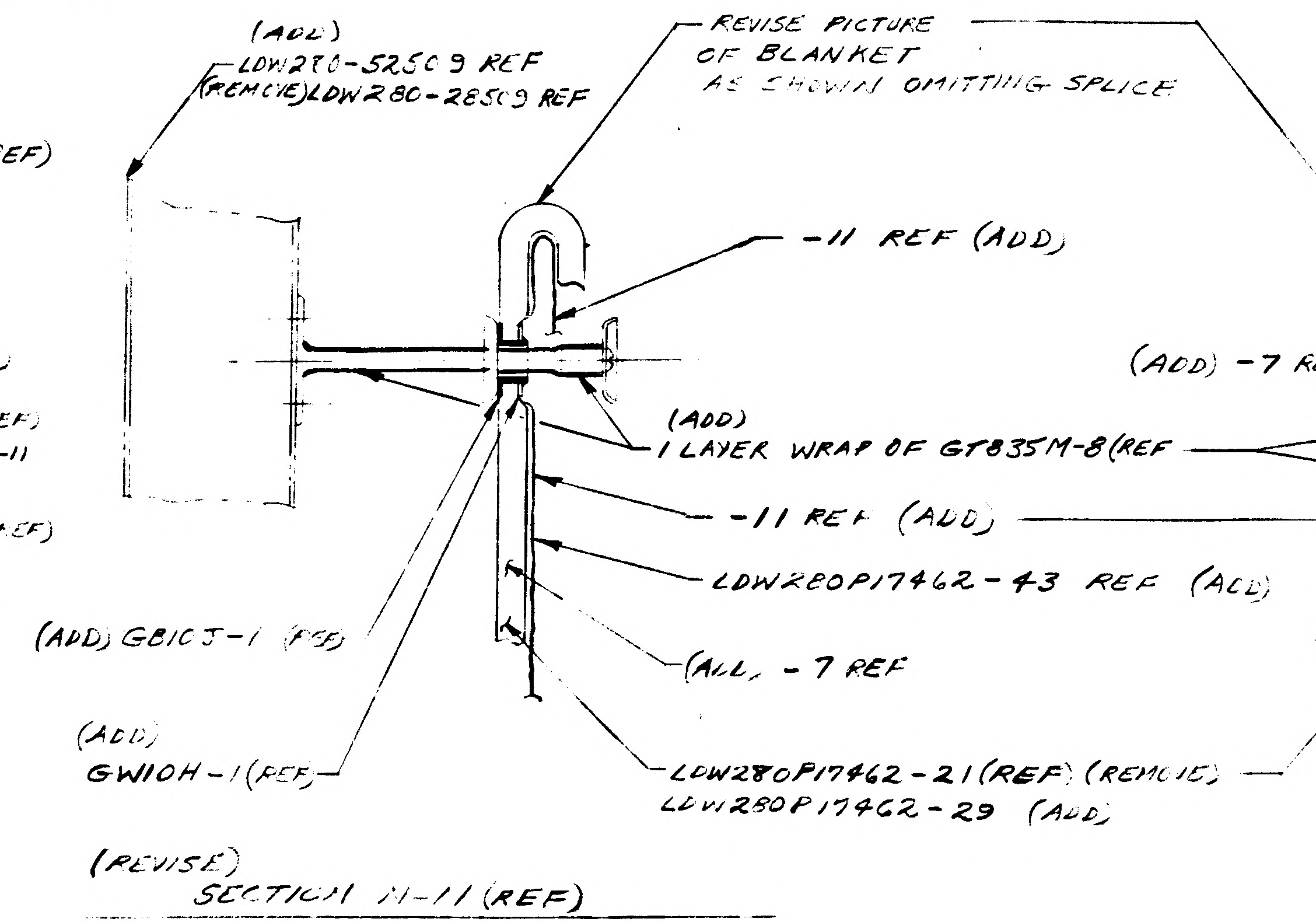
(ADD)
LDW280-52509 REF
(REMOVE) LDW280-28509 REF
REVISE PICTURE
OF BLANKET
AS SHOWN OMITTING SPLICE
-11 REF (ADD)
(ADD)
1 LAYER WRAP OF GT835M-8 (REF
-11 REF (ADD)
LDW280P17462-43 REF (ADD)
(ADD) GB10J-1 (REF)
(ADD) -7 REF
(ADD)
GW10H-1 (REF)
LDW280P17462-21 (REF) (REMOVE)
LDW280P17462-29 (ADD)
(REVISE)
SECTION M-M (REF)

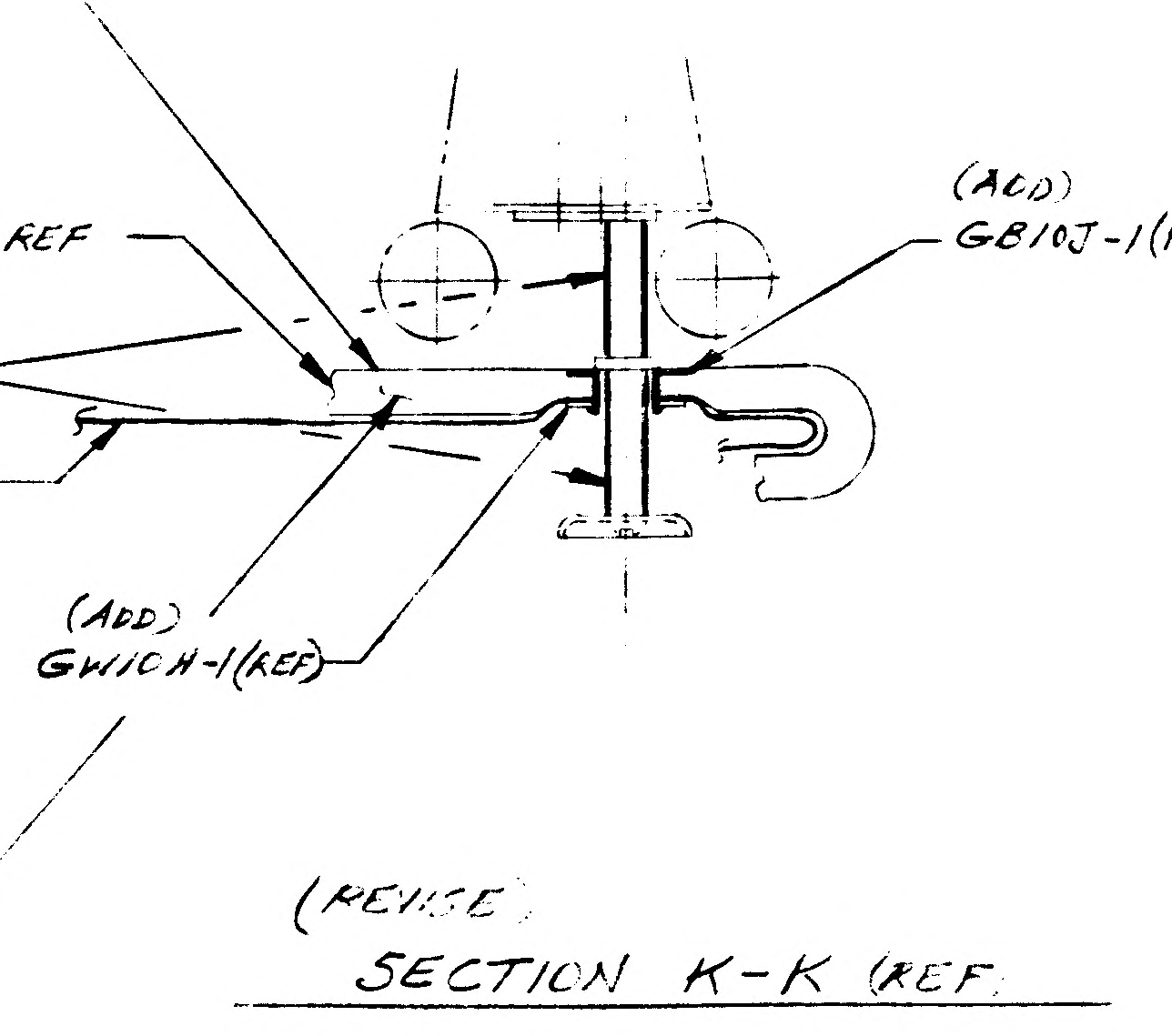
(ADD) -7 REF
(ADD)
GB10J-1 (REF)
(ADD)
GW10H-1 (REF)
(REVISE)
SECTION K-K (REF

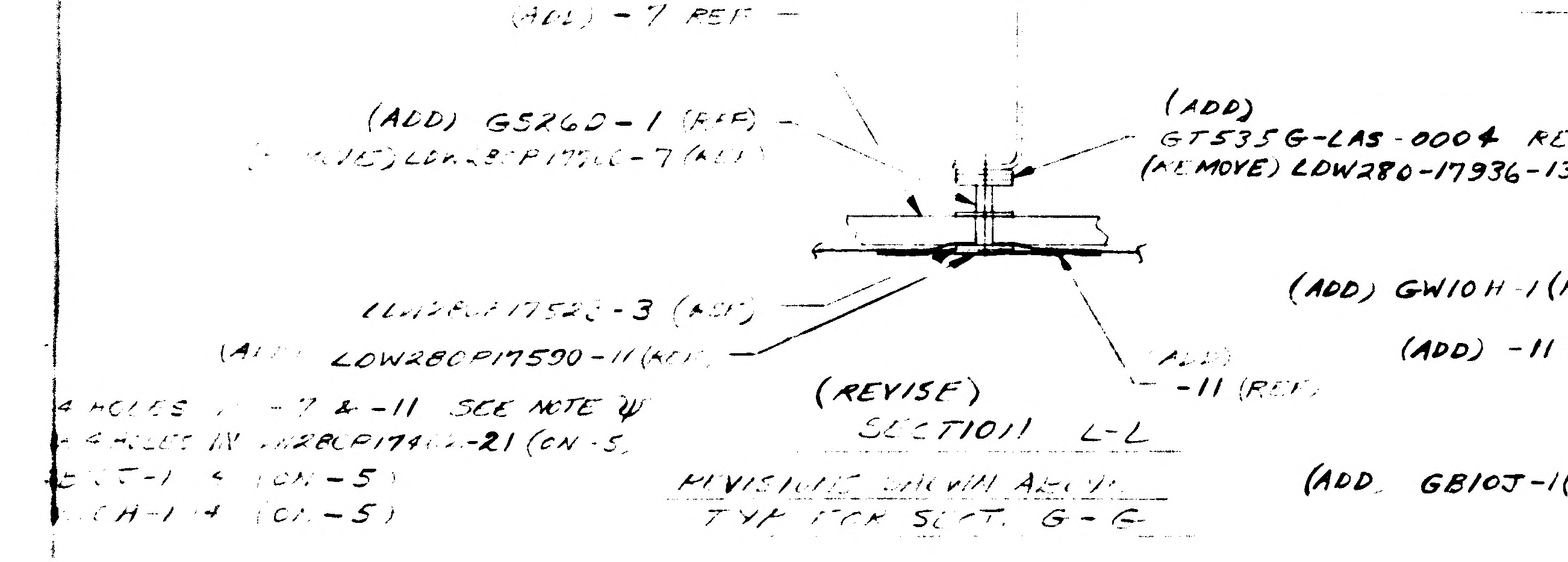
(ADD) -7 REF
(ADD) GS26D-1 (REF)
(REMOVE) LDW280P17500-7 (REF)
(ADD)
GT535G-LAS-0004 REF
(REMOVE) LDW280-17936-13 REF
LDW280P17523-3 (REF)
(ADD) LDW280P17590-11 (REF)
(ADD)
-11 (REF)
4 HOLES IN -7 & -11 SEE NOTE ψ
4 HOLES IN LDW280P17462-21 (ON-5)
-1 4 (ON-5)
-1 4 (ON-5)
(REVISE)
SECTION L-L
REVISIONS SHOWN ABOVE
TYP FOR SECT. G-G

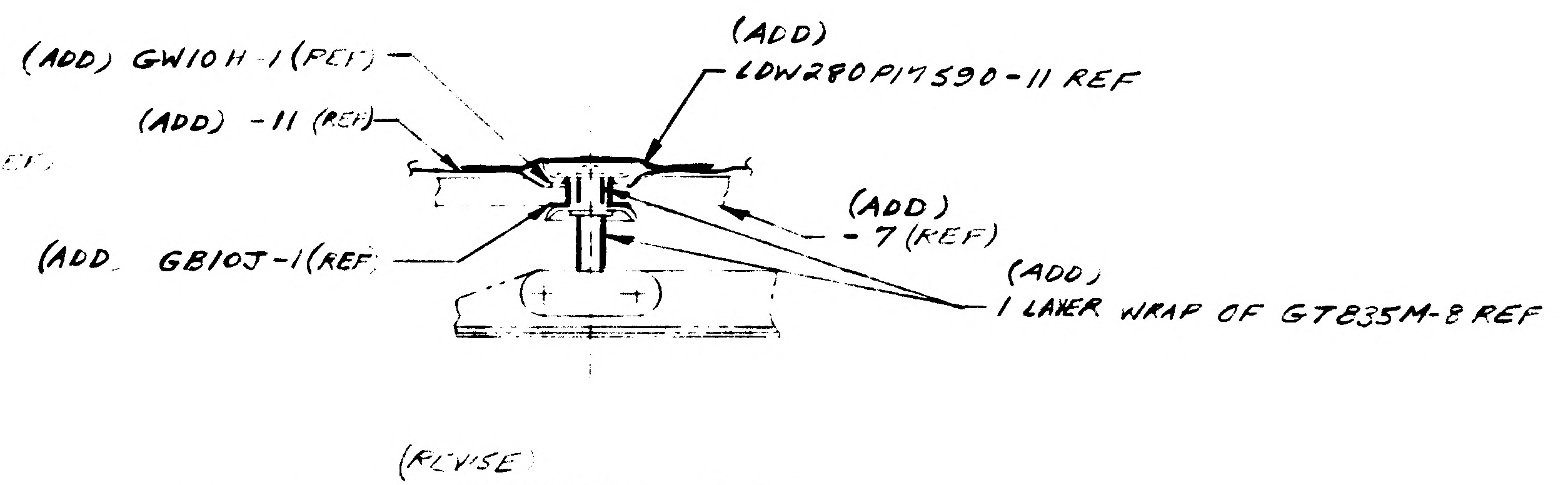
(ADD)
LDW280P17590-11 REF
(ADD) GW10H-1 (REF)
(ADD) -11 (REF)
(ADD)
-7 (REF)
(ADD GB10J-1 (REF
(ADD)
1 LAYER WRAP OF GT835M-8 REF
(REVISE)
SECTION P-P

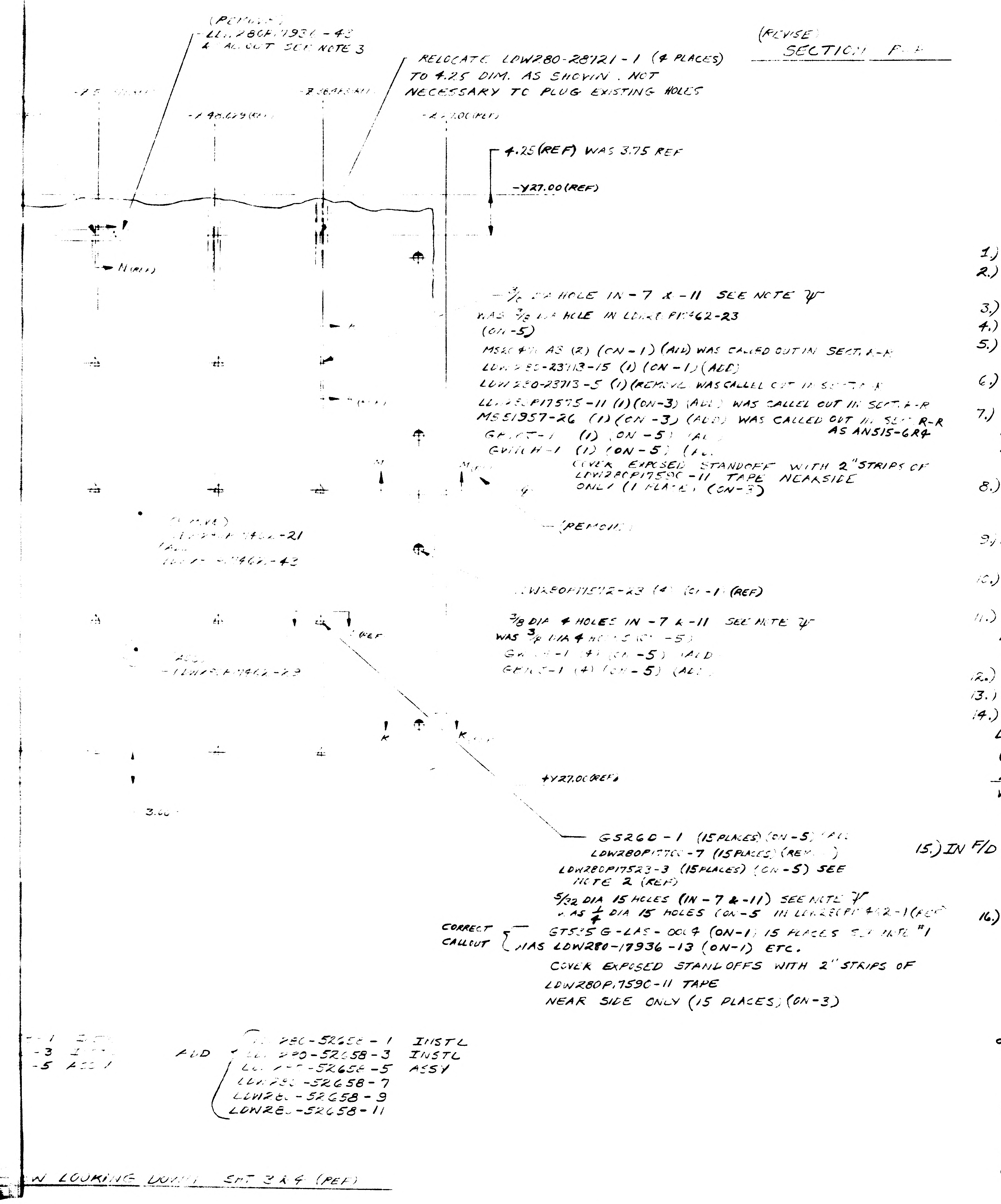
(REMOVE)
LDW280P17936-43
& CALLOUT SEE NOTE 3
RELOCATE LDW280-28721-1 (4 PLACES)
TO 4.25 DIM. AS SHOWN. NOT
NECESSARY TO PLUG EXISTING HOLES
-Y48.629 (REF)
-Z 00 (REF)
4.25 (REF) WAS 3.75 REF
-Y27.00 (REF)
N (REF)
-3/16 DIA HOLE IN -7 & -11 SEE NOTE ψ
WAS 3/8 DIA HOLE IN LDW280P17462-23
(ON-5)
MS20470A3 (2) (ON-1) (ADD) WAS CALLED OUT IN SECT. R-R
LDW280-23713-15 (1) (ON-1) (ADD)
LDW280-23713-5 (1) (REMOVE) WAS CALLED OUT IN SECT. R-R
LDW280P17575-11 (1) (ON-3) (ADD) WAS CALLED OUT IN SECT. R-R
MS51957-26 (1) (ON-3) (ADD) WAS CALLED OUT IN SECT. R-R AS AN515-6R4
GB10J-1 (1) (ON-5) (ADD)
GW10H-1 (1) (ON-5) (ADD)
COVER EXPOSED STANDOFF WITH 2" STRIPS OF
LDW280P17590-11 TAPE NEARSIDE
ONLY (1 PLACE) (ON-3)
(REMOVE)
LDW280P17462-21
LDW280P17462-43
LDW280P17572-23 (4) (ON-1) (REF)
3/8 DIA 4 HOLES IN -7 & -11 SEE NOTE ψ
WAS 3/8 DIA 4 HOLES (ON-5)
GW10H-1 (4) (ON-5) (ADD)
GB10J-1 (4) (ON-5) (ADD)
LDW280P17462-29
K
K
+Y27.00 (REF)
GS26D-1 (15 PLACES) (ON-5) (ADD)
LDW280P17500-7 (15 PLACES) (REMOVE)
LDW280P17523-3 (15 PLACES) (ON-5) SEE
NOTE 2 (REF)
5/32 DIA 15 HOLES (IN -7 & -11) SEE NOTE ψ
WAS 1/4 DIA 15 HOLES (ON-5 IN LDW280P17462-1 (REF)
CORRECT
CALLOUT
GT535G-LAS-0004 (ON-1) 15 PLACES SEE NOTE #1
WAS LDW280-17936-13 (ON-1) ETC.
COVER EXPOSED STANDOFFS WITH 2" STRIPS OF
LDW280P17590-11 TAPE
NEAR SIDE ONLY (15 PLACES) (ON-3)
-1
-3
-5 ASSY
ADD
LDW280-52658-1 INSTL
LDW280-52658-3 INSTL
LDW280-52658-5 ASSY
LDW280-52658-7
LDW280-52658-9
LDW280-52658-11
VIEW LOOKING SHT 3 & 4 (REF)

03/03 NAS 9-1100

1.) CREATE -1, -3, -5, -7, -9, & -11 I&T EXEMPT

2.) IN B/M ADD GS577A-1 STAPLE, GT835P-8, GT835M-8 ; GT535B-2-1.00, & LDW280P17590-11 TAPE (AS REQ'D) (ON-5)

3.) IN F/D & B/M REMOVE LDW280P17936-43 & -47 TAPE

4.) IN F/D REMOVE DETAIL "F" & SECTION H-H

5.) IN B/M ADD LDW280P17590-11 TAPE AS REQD ON-3

6.) IN F/D & B/M REMOVE LDW280P17462-21 & ADD LDW280P17462-29, -37 & -43

7.) IN F/D & B/M CORRECT CALLOUT FOR VELCRO TAPE GT535G-LAS-0004 REPLACES LDW280P17936-13 & GT535L-HA-0250 REPLACES LDW280P17936-29

8.) BREAK BLANKET PICTURE AT EDGES OMITTING PICTURE OF SPLICE. DETAILS OF SPLICE TO BE SHOWN ON MATING BLANKET

9.) REMOVE ALL LDW280-28509 REF CALLOUTS & REPLACE WITH LDW280-52509 REF CORRECT PICTURE OF REF STRUCTURE TO AGREE

10.) REVISE NOTE #2 TO READ: FASTEN LDW280P17523-3 TO GS26D-1 PER LPC280-14

11.) REVISE NOTE #3 TO READ: SEW GT535-HA-0250 TO -5 AT 3/16 ± 1/16 FROM EDGES OF GT535L-HA-0250 IN ACCORDANCE WITH FED STD #751a & STITCH TYPE 301

12.) REMOVE NOTE # 4

13.) ADD NOTE δ FABRICATE -5 BLANKET ASSY PER LPC280-1

14.) ADD NOTE ψ ALL ALUMINIZED MYLAR PARTS SHALL HAVE HOLE PATTERNS LOCATED WITH EXPANDED DIMS. THE EXPANSION RATIO IS TO BE .050 IN/IN (e.g. 10.000 SHOWN EXPANDS TO 10.500)
ALL ALUMINIZED POLYIMIDE PARTS SHALL HAVE HOLE PATTERNS LOCATED WITH EXPANDED DIMS THE EXPANSION RATIO IS TO BE .070 IN/IN (e.g. 10.000 SHOWN EXPANDS TO 10.700)

15.) IN F/D WRAP STEMS OF ALL LDW280-28721-1, LDW280-23712-3, LDW280-23713-15, & LDW280P17572-23 STANDOFFS WITH GT835M-8 TAPE (1 LAYER) (ON-1)

16.) IN F/D & B/M REMOVE ALL AN515-6R4 SCREWS & REPLACE WITH MS51957-26 SCREWS

δ, ψ, —— USE NEXT AVAILABLE NOTE NO.

✱-✱, Ω —— USE NEXT AVAILABLE SECTION LETTER

⯐, ⯐, ◆ ——— THESE SYMBOLS ARE FOR IDENTIFICATION OF STANDOFF TYPE ON E.O. ONLY DO NOT ADD TO DWG

	-11	-9	-7	-5	-3	-1	CODE IDENT	PART NO.	I&T	NOMENCLATURE OR DESCRIPTION	MATERIAL	GOVT SPEC	COML SPEC	STOCK SIZE	PROCESS SYM	FINISH NO.	ZONE
	QTY PER ASSEMBLY																
				AS REQD	AS REQD			LDW280P17590-11		TAPE							
				AS REQD				GT535B-2-1.00		TAPE							
				AS REQD		AS REQD		GT835M-8		TAPE							
				AS REQD				GT835P-8		TAPE							
				AS REQD				GS577A-1		STAPLE							
					31			GW10H-1		WASHER							
					31			GB10J-1		BUSHING							
				2				GT535L-HA-0250		TAPE							
						39		GT535G-LAS-0004		TAPE							
						6		MS20470AD4		RIVET							
						55		MS20470A3		RIVET							
					31			MS51957-26		SCREW							
				6				LDW280P17524-1		PATCH							
					31			LDW280P17575-11		RETAINER							
				39				LDW280P17523-3		CAP							
				39				GS26D-1		STANDOFF ASSY							
						4		LDW280P17572-23		STANDOFF							
						1		LDW280-23713-15		STANDOFF ASSY							
						20		LDW280-23712-3		STANDOFF ASSY							
						4		LDW280-28721-1		STANDOFF ASSY							
	1							LDW280P17462-43		SKIN							
		1						LDW280P17462-37		BLANKET ASSY							
			1					LDW280P17462-29		BLANKET ASSY							
				1				LDW280-52658-11		SKIN							
				1				-9		BLANKET ASSY							
				1				-7		BLANKET ASSY							
					1			-5		BLANKET ASSY							
								-3		BLANKET INSTL							
								LDW280-52658-1		STANDOFF INSTL							

REVISE B/M AS SHOWN ABOVE

MODEL	NEXT ASSY	MODULE NO.	REQD PER MODULE	MODEL	NEXT ASSY	MODULE NO.	REQD PER MODULE
LM	LDW280-54509	LM-15 (45)	1	LM	LDW280-54509	LM-15 (45)	1
		LM-14 (44)	1			LM-14 (44)	1
		LM-13 (43)	1			LM-13 (43)	1
		LM-12 (42)	1			LM-12 (42)	1
		LM-11 (41)	1			LM-11 (41)	1
		LM-10 (40)	1			LM-10 (40)	1
		LM-9 (39)	1			LM-9 (39)	1
		LM-8 (38)	1			LM-8 (38)	1
		LM-7 (37)	1			LM-7 (37)	1
		LM-6 (36)	1			LM-6 (36)	1
		LM-5 (35)	1			LM-5 (35)	1
	LDW280-54509	LM-4 (34)	1		LDW280-54509	LM-4 (34)	1
	LDW280-53553	LM-3 (33)	1		LDW280-53509	LM-3 (33)	
LM	LDW280-52553	LM-2 (32)	1	LM	LDW280-52509	LM-2 (32)	1
PART NO. LDW280-52658-3				PART NO. LDW280-52658-1			

REVISE M/B AS SHOWN ABOVE

CREATE LDW280-52658-1, -3, & -5 IDENTICAL TO LDW280-28658-1, -3, & -5 (A_2) EXCEPT AS SHOWN ON THIS E.O.

▲ DRAWING NOT MADE

2)

DETAIL SPEC REQD ☐ CLASS II ENGRG CHG ☑ CLASS I ENGRG CHG ☐
CONTROL INFO NO. LL 280-3053

REASON FOR EO: TO PROVIDE THERMAL SHIELDING FOR LM-2 THRU LM-15

DESCRIPTION OF EO: E.O. A, INITIAL DRAWING RELEASE PARTS MADE PER E.O.

GRUMMAN EO RELEASE: 2

MODEL	PROCURING ACT. NO.	GAEC UNIT NO.	SUB CONTR UNIT NO.
LM	LM-2 (32)	THRU LM-15 (45)	

DRAWING REVISION REQD: ▲ REVISE DWG | RECORD EO
DISPOSITION OF PARTS: NOT REQD REWORK | NOT REQD SCRAP
DATE: 11/16/66 | 11/18/66
SUPPORT THERMO | RELIAB GROUP | GROUP LEADER | STRESS GROUP | LIAISON ENGRG | PROJ ENGR | GOV'T

PRIORITY: C

DRAWING TITLE: STANDOFF INSTL D.S. - AFT - THERMAL

ENGINEERING ORDER
DRAWING NO. LDW280-52658
EO NO. A

ISSUED BY J. BUKOWSKI (GT 1153) SECTION V.D.I. GROUP NO. 335 PL 35
CODE IDENT NO. 26512
GRUMMAN AIRCRAFT ENGINEERING CORP
BETHPAGE, L. I., N. Y.

ENG 32 3 REV 3-65

ENG 32.1 REV 3-65

GRUMMAN AIRCRAFT ENGINEERING CORP.
CODE IDENT NO. 26512
ENGINEERING ORDER EMF A

DWG. NO. LDW280-52658		EO NO. A2	
CONTROL INFO NO. LDW 280A-4302			

ON-5 REMOVE LDW280P17524-1 ; 6 PLCS

ON-3 REVISE N/A
ON EFF LM4 THRU LM15 N/A LDW280-54553 WAS LDW280-54509
QUANTITIES REMAIN THE SAME

DETAIL SPEC REQ		CL II ENGRG CHG		CL I ENGRG CHG		2

REASON FOR EO	DESCRIPTION OF EO	GAEC EO RELEASE
TO MAKE DWG AGREE WITH TEMPLATE	ON-5 REMOVED LDW280P17524-1 ; 6 PLCS	FE 12/16/6

MODEL	PROCURING ACTIVITY NO.	GAEC UNIT NO.	SUB CONTR UNIT NO.
LM		LM-2(32)	
LM		THRU	
LM		LM-15(95)	

DRAWING CHANGE REQD		DISPOSITION OF PARTS										
				APPROVED BY		V.J.						
✓		NOT	REQ'D	DATE	12/13/66	12/13			12/13/66		12-13-66	12-13-66
REVISE DWG	RECORD EO	REWORK	SCRAP	/	VDI	~~SUPPORT~~ THERM	RELIAB. GROUP	GROUP LEADER	STRESS GROUP	LIAISON ENGRG	PROJ ENGRG	~~GOVT~~

PRIORITY	DRAWING TITLE	DRAWING NO.	EO NO.
C	STAND OFF INST'L D/S AFT THERMAL	LDW280-52658	A2

ISSUED BY T. AMBROSIO/STRAKOSCH X1153 SECTION V. D. 1 GROUP NO. 335 PL 35

01 NAS 9-1100

B *

ENG 22.1 REV 3-66

GRUMMAN AIRCRAFT ENGINEERING CORP.
CODE IDENT NO. 26512
ENGINEERING ORDER

DWG. NO. LDW280 52658 | EO NO. B1
CONTROL INFO NO. LM5-11988

ON-5 ASSY

ADD LDW280-23712-7 ASSY & REMOVE [redacted]-LDW280P17572-23
PICK UP EXISTING FASTENERS. (TYP. 4 PLACES)

RELEASED BY LIAISON

DETAIL SPEC REQ		CL II ENGRG CHG	✓	CL I ENGRG CHG		5

REASON FOR EO: TO PREVENT BREAKAGE OF STANDOFFS

DESCRIPTION OF EO: ON-5 ASSY ADDED LDW280-23712-7 & REMOVE LDW280 P17572-23 (TYP. 4 PLACES)

GAEC EO RELEASE: C JK

MODEL	PROCURING ACTIVITY NO.	GAEC UNIT NO.	SUB CONTR UNIT NO.
LM		LM2(32) THRU 15(45)	

DRAWING CHANGE REQD: REVISE DWG	RECORD EO	DISPOSITION OF PARTS: REWORK	SCRAP
✓		✓	

	APPROVED BY	DATE	
3	WT	3/10/67	VDI
SUPPORT			
RELIAB. GROUP			
GROUP LEADER	~	~	
STRESS GROUP	WH	3/15/67	
LIAISON ENGRG	CH	3-1-67	
PROJ ENGRG		3-22-67	
GOVT		3/15/67	

PRIORITY: C
DRAWING TITLE: SHIELD INST D/S AFT — THERMAL
DRAWING NO.: LDW280-52658
EO NO.: B1

ISSUED BY DON RAGAS X6510 SECTION VDI GROUP NO. 335 PL 5

01

NAS 9-1100

B

ENG 32.1 REV 3-65

GRUMMAN AIRCRAFT ENGINEERING CORP.
CODE IDENT NO. 26512
ENGINEERING ORDER

*

DWG. NO LDW280-52658		EO NO. B2
CONTROL INFO NO. LDW 280A5953		

IN F/D & B/M FOR -11 ADD LDW280P17462-51 BLANKET ASSY AS SHOWN

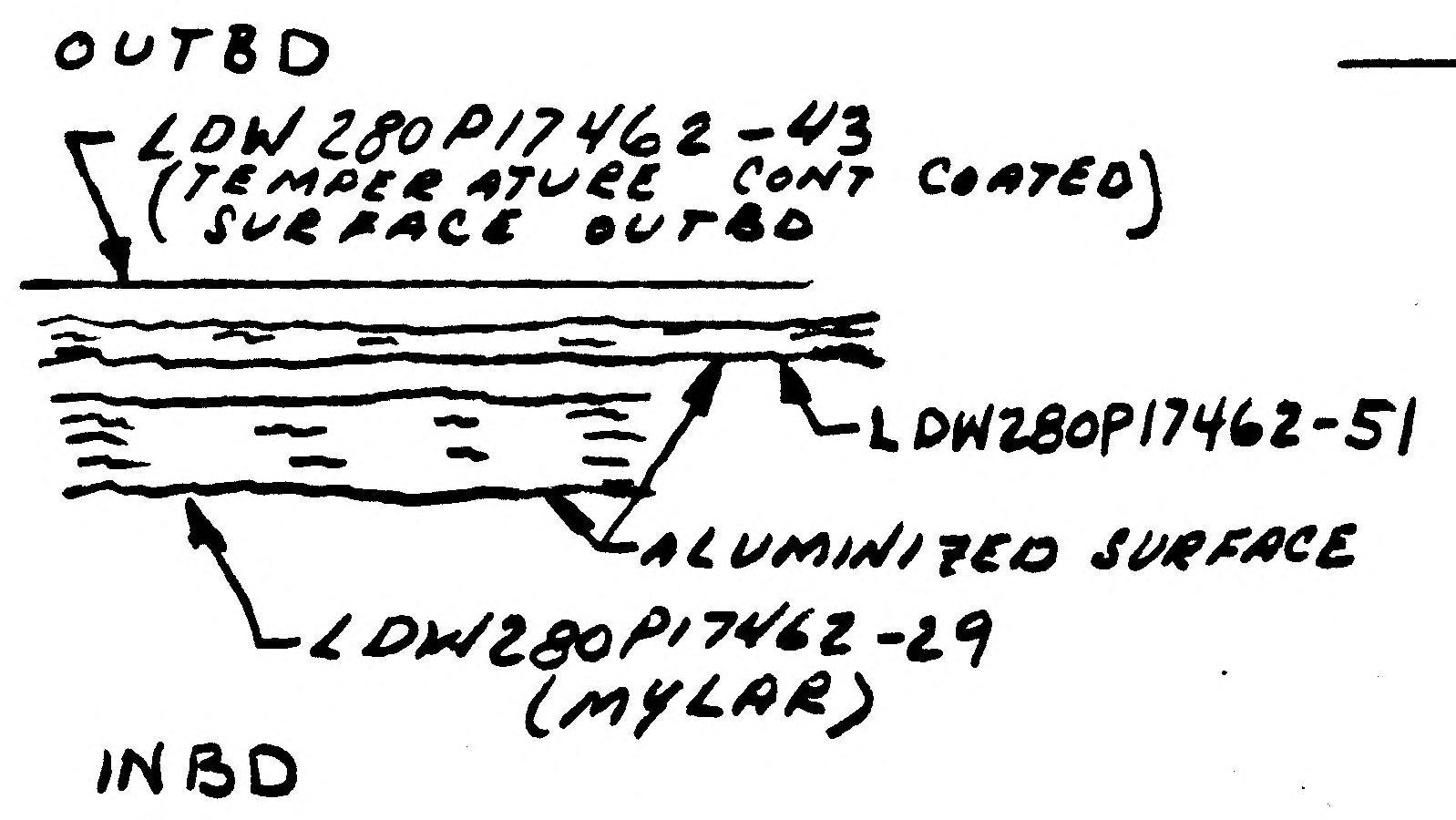
OUTBD
LDW280P17462-43 (TEMPERATURE CONT COATED) SURFACE OUTBD
LDW280P17462-51
ALUMINIZED SURFACE
LDW280P17462-29 (MYLAR)
INBD

SECT Δ-Δ
ADD

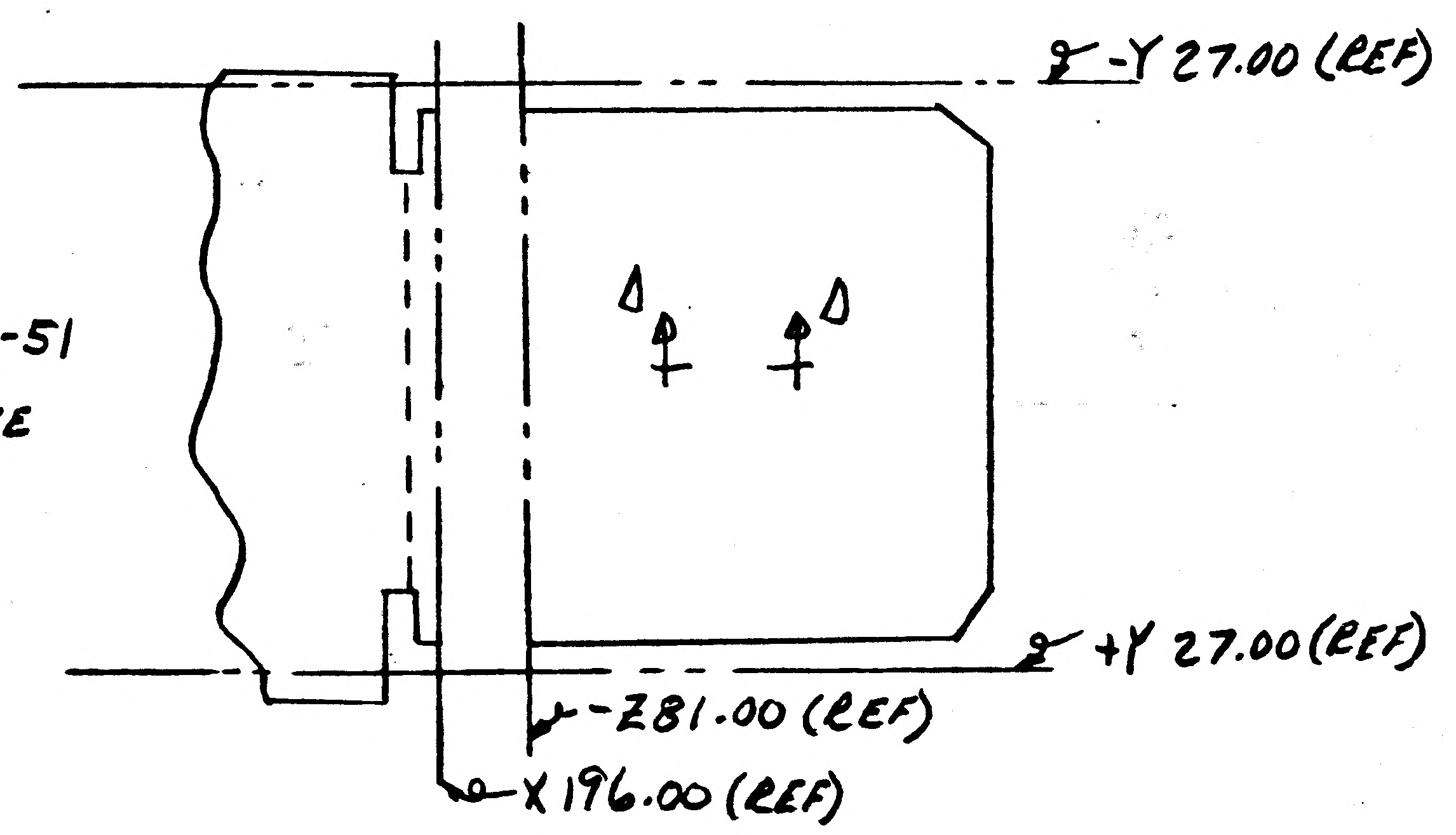
℄ -Y 27.00 (REF)
Δ
Δ
℄ +Y 27.00 (REF)
-Z81.00 (REF)
X 196.00 (REF)

* REWORK AS SHOWN

Δ = NEXT AVAIL. LTR.

DETAIL SPEC REQ	☐	CL II ENGRG CHG	☑	CL I ENGRG CHG	☐	LCD19-1135	5

REASON FOR EO	DESCRIPTION OF EO	GAEC EO RELEASE
ADDITIONAL THERMAL PROTECTION (LCR19-1135)	IN F/D & B/M FOR -11 ADDED LDW280P17462-51	Ⓡ C JK 3/23/7

MODEL	EFFECTIVITY		
	PROCURING ACTIVITY NO.	GAEC UNIT NO.	SUB CONTR UNIT NO.
LM		LM-2(32)	
		THRU	
		LM-15(45)	

DRAWING CHANGE REQD		DISPOSITION OF PARTS		APPROVED BY		M.S			W/H			
✓		✓		DATE	3/16/67	3/21/67		3/16/67	3/20/67		3/21/67	3-27-67
REVISE DWG	RECORD EO	REWORK	SCRAP	.5	VD1	~~SUPPORT~~	RELIAB. GROUP	GROUP LEADER	STRESS GROUP	LIAISON ENGRG	PROJ ENGRG	

PRIORITY	DRAWING TITLE	DRAWING NO.	EO NO.
C	INSTL STANDOFF DESCENT STAGE AFT THERMAL	LDW280-52658	B2

ISSUED BY H. PALLMEYER / J. STRAKOSCH SECTION VEH DES INT GROUP NO. 335 PL 25

01 NAS 9-1100

ENG 32.1 REV 3-65

B

GRUMMAN AIRCRAFT ENGINEERING CORP.
CODE IDENT NO. 26512
ENGINEERING ORDER

DWG. NO. LDW280 52658
EO NO. B3
CONTROL INFO NO. LM5-13224

THIS IS A REV OF EO B1

ON-5 ASSY S/B ON-1 INSTL

RELEASED BY LIAISON

DETAIL SPEC REQ	☐	CL II ENGRG CHG	☑	CL I ENGRG CHG	☐

5

REASON FOR EO: CORRECTION OF INCORRECT CALLOUT

DESCRIPTION OF EO: REF EO B1 REVISED CALLOUT ON-5 S/B ON-1

GAEC EO RELEASE: C
JK

MODEL	PROCURING ACTIVITY NO.	GAEC UNIT NO.	SUB CONTR UNIT NO.
LM		LM2 (32) THRU 15 (45)	

DRAWING CHANGE REQD: REVISE DWG ✓ RECORD EO

DISPOSITION OF PARTS: REWORK ✓ SCRAP

APPROVED BY	WT			~	JFJ	CH	DAM	
DATE	4-21-67			~	4-24-67	4-22	4-26-67	4/24/67
3	VDI	SUPPORT	RELIAB. GROUP	GROUP LEADER	STRESS GROUP	LIAISON ENGRG	PROJ ENGRG	~~GOVT~~

PRIORITY: C
DRAWING TITLE: SHIELD INSTL D/S AFT-THERMAL
DRAWING NO.: LDW280-52658
EO NO.: B3

ISSUED BY DON RAGAS X6510 SECTION VDI GROUP NO. 335 PL 5

01

NAS 9-1100

FITH

GRUMMAN AIRCRAFT ENGINEERING CORP.
CODE IDENT NO. 26512
ENGINEERING ORDER

ENG 32.2 REV 3-65

DWG. NO. LDW280-52658 | EO NO. B4
CONTROL INFO NO. LDW280A 7356

ADD -13 STANDOFF INSTL (SAME AS -1 EXCEPT AS SHOWN) N/A: LDW280-52509 EFF LM-2(32)(1 REQD)
ADD -15 BLKT INSTL (SAME AS -3 EXCEPT AS SHOWN) N/A LDW280-52553 EFF: LM-2(32)(1 REQD)
IN M/B FOR-1 REMOVE N/A LDW280-52509 EFF LM-2(32)
" FOR-3 REMOVE N/A LDW280-52553 EFF LM-2(32)

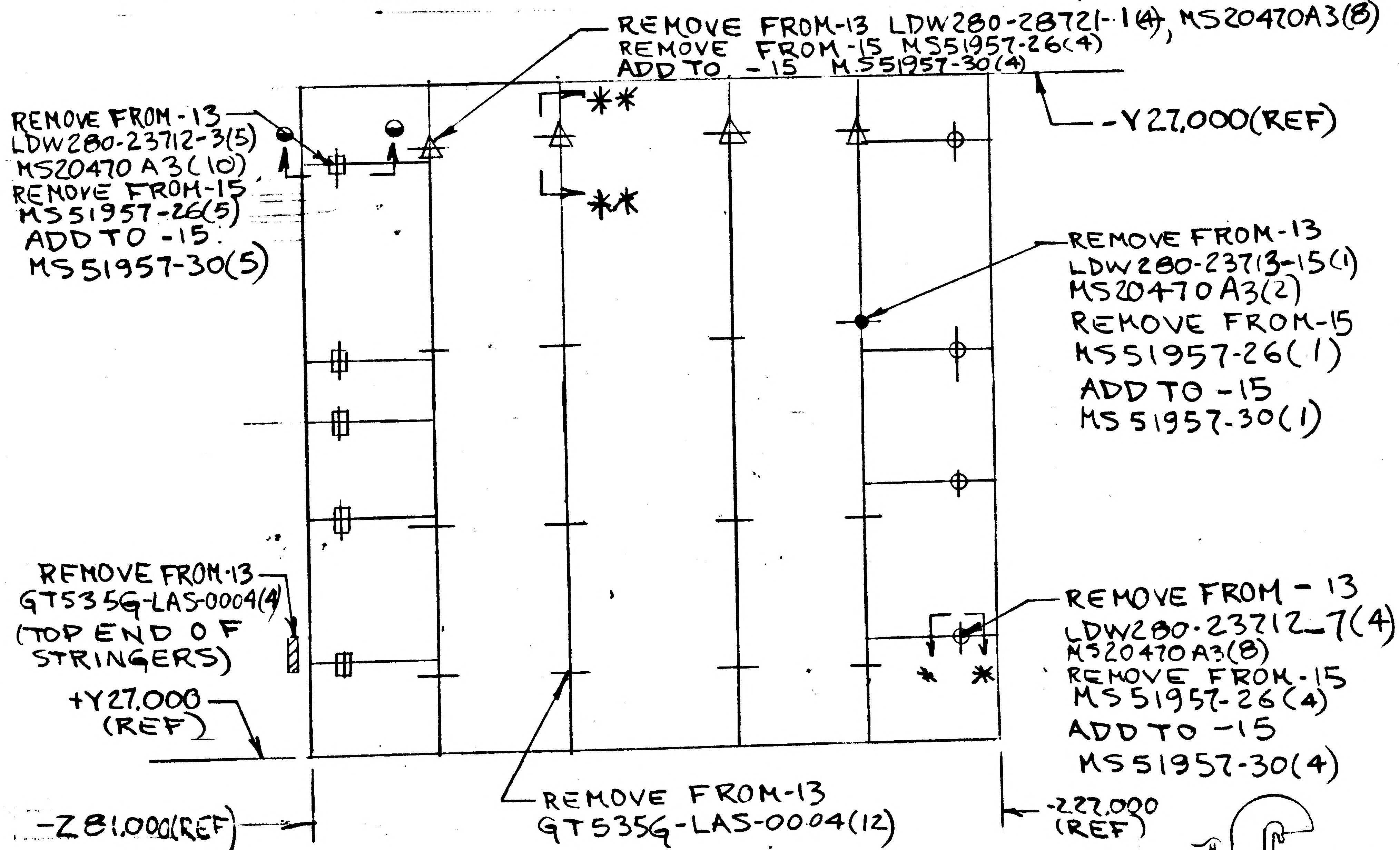
REMOVE FROM-13 LDW280-28721-1(4), MS20470A3(8)
REMOVE FROM-15 MS51957-26(4)
ADD TO -15 MS51957-30(4)
-Y27,000(REF)
REMOVE FROM-13
LDW280-23712-3(5)
MS20470 A3(10)
REMOVE FROM-15
MS51957-26(5)
ADD TO -15
MS51957-30(5)
**
**
REMOVE FROM-13
LDW280-23713-15(1)
MS20470A3(2)
REMOVE FROM-15
MS51957-26(1)
ADD TO -15
MS51957-30(1)
REMOVE FROM-13
GT535G-LAS-0004(4)
(TOP END OF STRINGERS)
+Y27,000 (REF)
REMOVE FROM - 13
LDW280-23712-7(4)
MS20470A3(8)
REMOVE FROM-15
MS51957-26(4)
ADD TO -15
MS51957-30(4)
* *
REMOVE FROM-13
GT535G-LAS-0004(12)
-Z81,000(REF)
-Z27,000 (REF)

* -1 ¢ -3 MAY BE REWORKED TO -13 ¢ -15

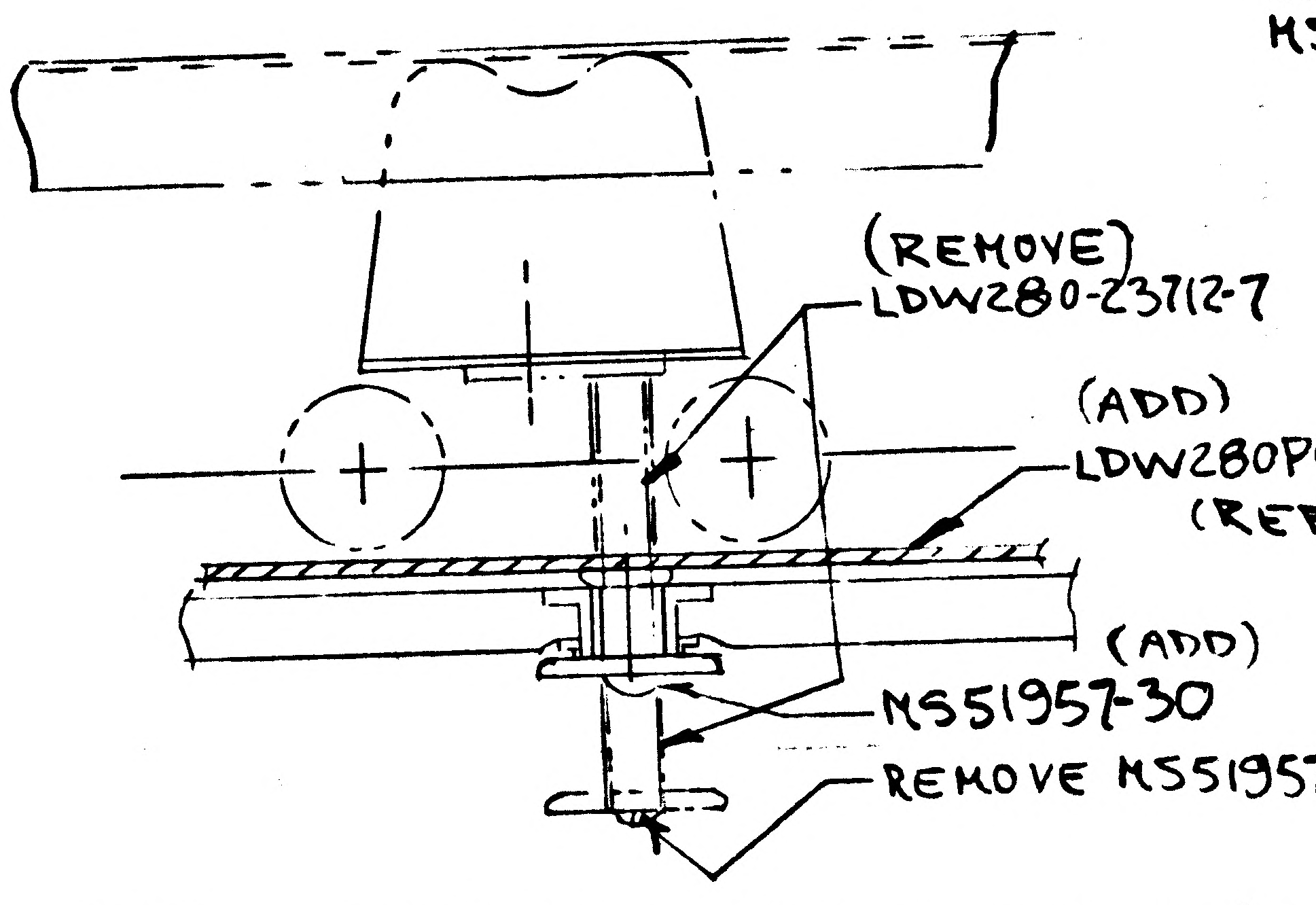
(REMOVE)
LDW280-23712-7
(ADD)
LDW280P51101
(REF)
(ADD)
MS51957-30
REMOVE MS51957-26

ADD SECT *-* (FOR-13 ¢ -15 ONLY)
(SAME AS SECT K-K EXCEPT AS SHN)

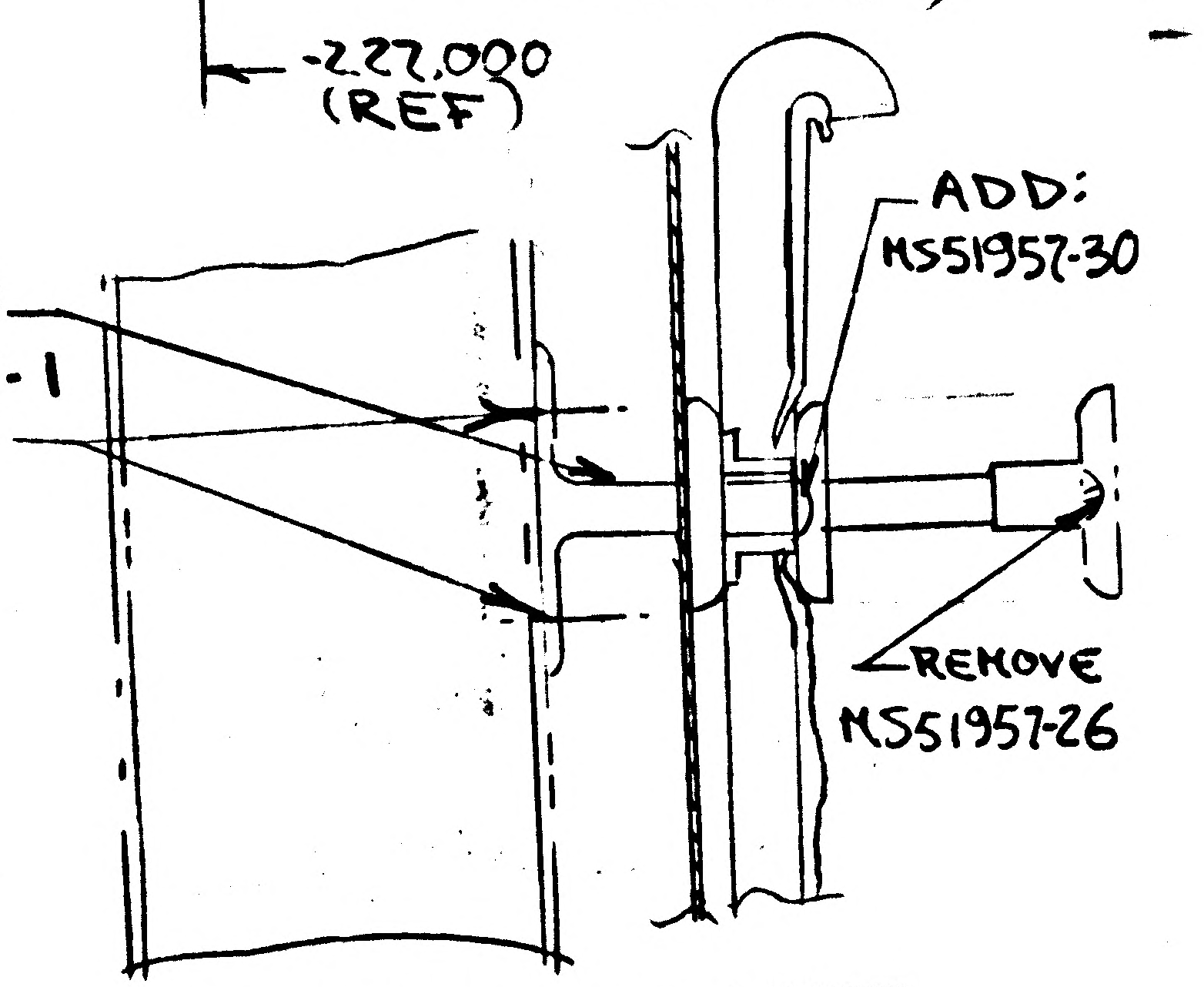
REMOVE:
LDW280-28721-1
MS20470A3(2)
ADD:
MS51957-30
REMOVE
MS51957-26

ADD SECT **-**
(FOR-13 ¢ 15 ONLY) (SAME AS SECT N-N EXCEPT AS SHOWN)

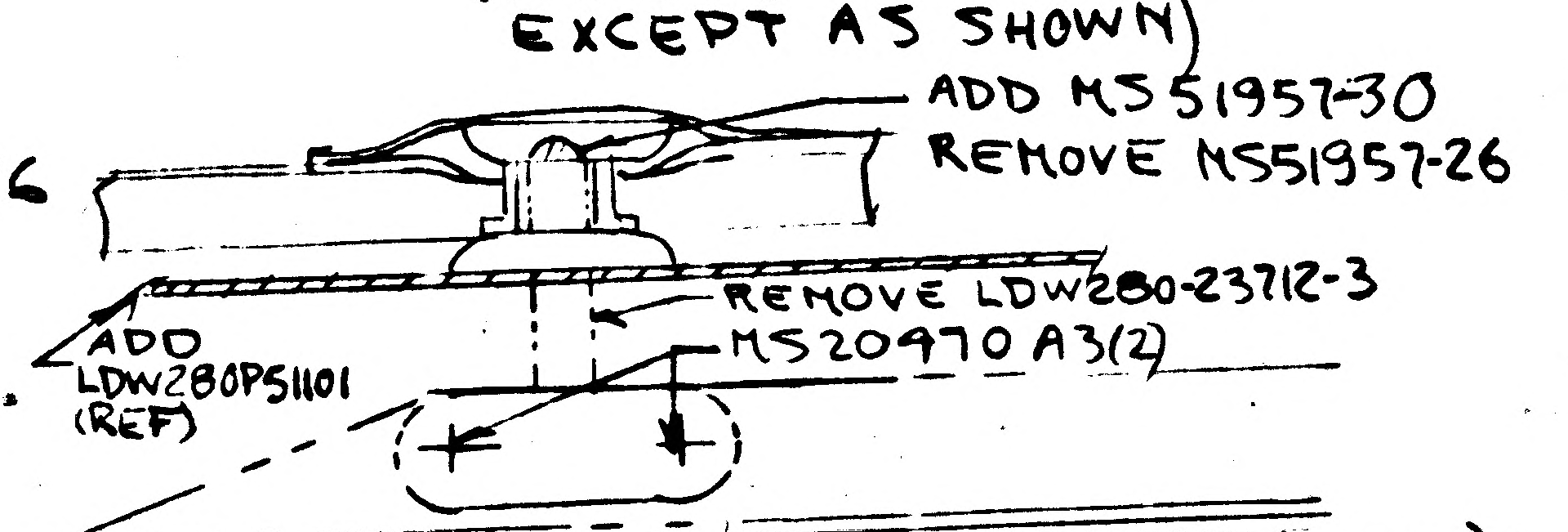
ADD MS51957-30
REMOVE MS51957-26
REMOVE LDW280-23712-3
MS20470 A3(2)
ADD
LDW280P51101
(REF)

ADD SECT ●-● (SAME AS SECT P-P EXCEPT AS SHN)

NOTE: (DO NOT INCORPORATE ON DWG) EXTRANEOUS HOLES MAY BE LEFT OPEN

LCD-1244

DETAIL SPEC REQ		CL II ENGRG CHG		CL I ENGRG CHG	✓

REASON FOR EO: TO PROVIDE FOR FITH SHIELD

DESCRIPTION OF EO: ADDED-13(1) N/A LDW280-52509 EFF LM-2(32), ADDED-15(1): N/A LDW280-52553 EFF LM-2(32), IN M/B: FOR-1 REMOVED N/A LDW280-52509 EFF LM-2. FOR-3 REMOVED N/A LDW280-52553 EFF LM-2. ADDED SECTS *-*, **-** ¢ ●-●

Ⓡ GAEC EO RELEASE: J/C 6/20/7

MODEL	PROCURING ACTIVITY NO.	GAEC UNIT NO.	SUB CONTR UNIT NO.
LM		LM-2(32)	

DRAWING CHANGE REQD: REVISE DWG	RECORD EO	DISPOSITION OF PARTS: REWORK	SCRAP
✓		✓*	

		SUPPORT	RELIAB. GROUP	GROUP LEADER	STRESS GROUP	LIAISON ENGRG	PROJ ENGRG	GOVT
APPROVED BY	JaP			JAS			Cam	
DATE	6/12/67			6/12/67	6/13/67		6/15/67	6/19/67
5	VDI							

PRIORITY: C
DRAWING TITLE: STANDOFF INSTL DESCENT STAGE - AFT - THERMAL
DRAWING NO.: LDW280-52658
EO NO.: B4

ISSUED BY STEA / STRAKOSCH SECTION VDI GROUP NO. 335 PL 25

01
NAS 9-1100

ENG 32.1 REV 3-65

GRUMMAN AIRCRAFT ENGINEERING CORP.
CODE IDENT NO. 26512
ENGINEERING ORDER *

DWG. NO. LDW280-52658		EO NO.	B5
CONTROL INFO NO. LDW280A 8144			

FOR -15 BLANKET INSTL ADD LDW280P18339-7 BLANKET ASSY
& LDW280P18339-23 TAPE ASSY

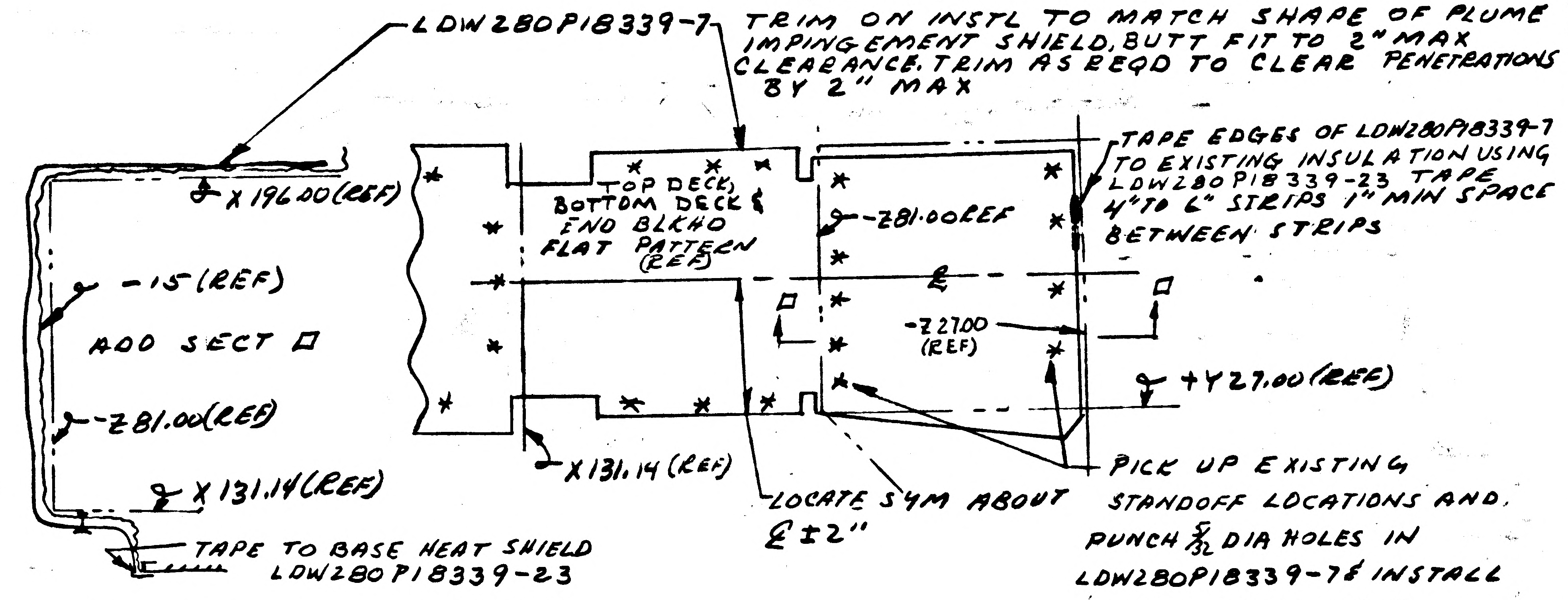

LDW280P18339-7
X 196.00 (REF)
TOP DECK, BOTTOM DECK & END BLKHD FLAT PATTERN (REF)
-Z81.00 REF
-15 (REF)
ADD SECT □
-Z81.00 (REF)
X 131.14 (REF)
X 131.14 (REF)
-Z27.00 (REF)
+Y27.00 (REF)

LDW280P18339-7 TRIM ON INSTL TO MATCH SHAPE OF PLUME IMPINGEMENT SHIELD, BUTT FIT TO 2" MAX CLEARANCE. TRIM AS REQD TO CLEAR PENETRATIONS BY 2" MAX

TAPE EDGES OF LDW280P18339-7 TO EXISTING INSULATION USING LDW280P18339-23 TAPE 4" TO 6" STRIPS 1" MIN SPACE BETWEEN STRIPS

PICK UP EXISTING STANDOFF LOCATIONS AND PUNCH 5/32 DIA HOLES IN LDW280P18339-7 & INSTALL WITH EXISTING HDW

LOCATE SYM ABOUT ℄ ±2"

TAPE TO BASE HEAT SHIELD LDW280P18339-23

□ = NEXT AVAILIBE SECT LETTER

DETAIL SPEC REQ		CL II ENGRG CHG		CL I ENGRG CHG	✓	LCD-1847	5

REASON FOR EO	DESCRIPTION OF EO	Ⓡ GAEC EO RELEASE C
ADDITIONAL THERMAL PROTECTION	FOR -15 ADDED LDW280P18339-7 & -23 ADDED SECT □	JK 8/1/7

MODEL	EFFECTIVITY		
	PROCURING ACTIVITY NO.	GAEC UNIT NO.	SUB CONTR UNIT NO.
LM		LM-2(32)	

DRAWING CHANGE REQD		DISPOSITION OF PARTS	
✓		-15	
REVISE DWG	RECORD EO	REWORK	SCRAP

APPROVED BY									B.
DATE	7/31/67		7/31/67	7/31/67	7/31/67			7/31/67	8-1-67
	VDI	SUPPORT	~~REL'AB.~~ THERMAL GROUP	GROUP LEADER	STRESS GROUP	LIAISON ENGRG		PROJ ENGRG	GOVT

PRIORITY	DRAWING TITLE	DRAWING NO.	EO NO.
C	STANDOFF INSTL D.S.-AFT THERMAL SHIELD	LDW280-52658	B5

ISSUED BY H. PALLMEYER / J. STRAKOSCH SECTION VEH DES INT GROUP NO. 335 PL 25

01 NAS 9-1100

ENG 32.2 REV 3-65

FITH B

GRUMMAN AIRCRAFT ENGINEERING CORP.

CODE IDENT NO. 26512

ENGINEERING ORDER

DWG. NO. LDW280-52658	EO NO. B6
CONTROL INFO NO. LDW280A7870	

FOR -3, ADD SECT. ** & -17 REPLACES -5. FOR -17, -19, -21 REPLACE -7 & -11 RESP.
FOR -1, REMOVE 29 STANDOFFS AS SHOWN BELOW
ADD -17 ASSY, IDENTICAL TO -5 EXCEPT AS SHOWN
" -19 " " -7 EXCEPT LDW280P17462-53 REPL. -29
" -21 " " -11 EXCEPT LDW280P17462-57
REPLACES -43 & DELETE LDW280P17462-51

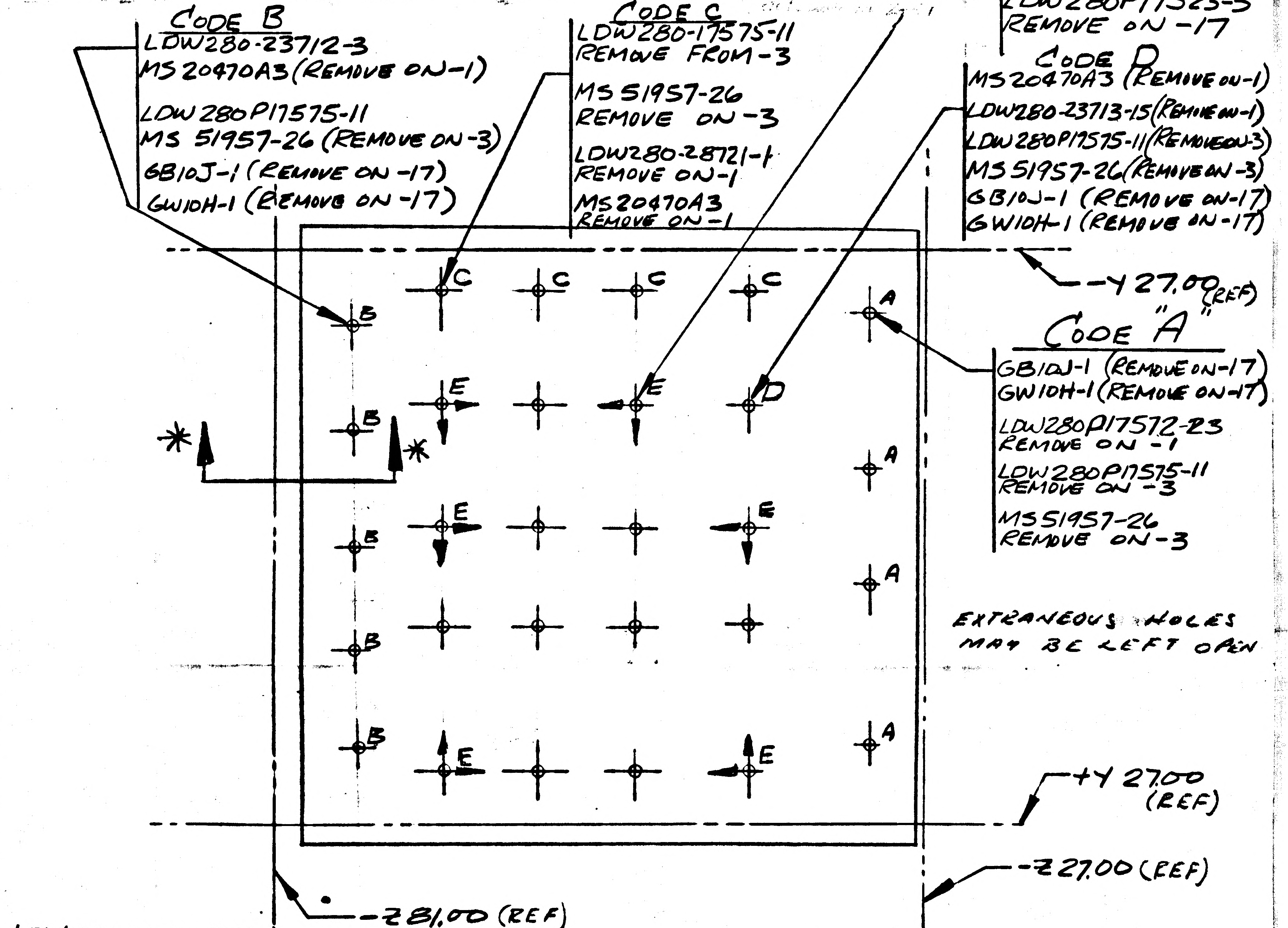
CODE "E"
GT535G-LAS-0004
REMOVE ON -1
GS26D-1
REMOVE ON -17
LDW280P17523-3
REMOVE ON -17
CODE B
LDW280-23712-3
MS20470A3 (REMOVE ON -1)
LDW280P17575-11
MS 51957-26 (REMOVE ON -3)
GB10J-1 (REMOVE ON -17)
GW10H-1 (REMOVE ON -17)
CODE C
LDW280-17575-11
REMOVE FROM -3
MS 51957-26
REMOVE ON -3
LDW280-28721-1
REMOVE ON -1
MS20470A3
REMOVE ON -1
CODE D
MS20470A3 (REMOVE ON -1)
LDW280-23713-15 (REMOVE ON -1)
LDW280P17575-11 (REMOVE ON -3)
MS 51957-26 (REMOVE ON -3)
GB10J-1 (REMOVE ON -17)
GW10H-1 (REMOVE ON -17)
-Y 27.00 (REF)
CODE "A"
GB10J-1 (REMOVE ON -17)
GW10H-1 (REMOVE ON -17)
LDW280P17572-23
REMOVE ON -1
LDW280P17575-11
REMOVE ON -3
MS51957-26
REMOVE ON -3
A
B
C
D
E
*
EXTRANEOUS HOLES MAY BE LEFT OPEN
+Y 27.00 (REF)
-Z 27.00 (REF)
-Z 81.00 (REF)

VIEW LKG. DWN. ON -Z UPPER DECK

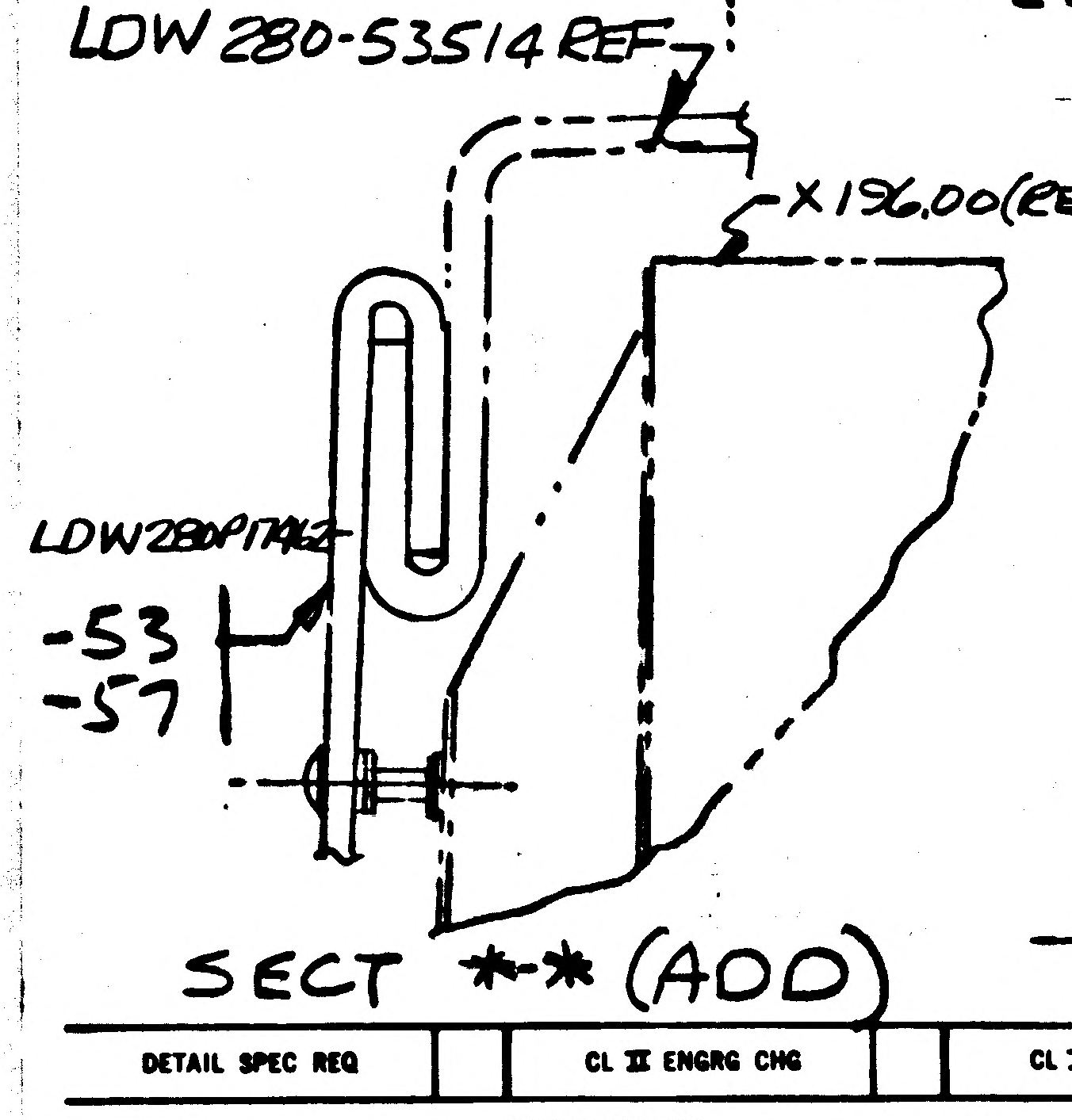
LDW 280-53514 REF
-X196.00 (REF.)
LDW280P17462
-53
-57

SECT ** (ADD)

Δ NOTE: -17, -19, -21 MAY BE REWORKED FROM -5, -7, -11 RESP.

DESCRIPTION OF EO (CONT'D.)

REMOVED FROM -3, MS51957-26 (14), LDW280P17575-11 (14)
[illegible]
[illegible] (15) ON -3, -17 REPLACED -5. REMOVED FROM -1, MS20470A3 (10), LDW280-28721-1 (4), LDW280-23712-3 (5), LDW280-23713-15 (1) LDW280P17572-23 (4) & GTA535G-LAS-0004 (15)

- USE NEXT AVAILABLE LETTER 5

DETAIL SPEC REQ		CL II ENGRG CHG		CL I ENGRG CHG	✓ LCD-1244 ok

REASON FOR EO	DESCRIPTION OF EO	GAEC EO RELEASE
TO PROVIDE FOR FITH SHIELD	ADDED -17, -19, -21, ASSYS. ADD SECT ** FOR -3 SEE NOTE Δ.	C JK 8/2/67

MODEL	EFFECTIVITY: PROCURING ACTIVITY NO.	GAEC UNIT NO.	SUB CONTR UNIT NO.	DRAWING CHANGE REQD		DISPOSITION OF PARTS		APPROVED BY									
				✓		Δ		DATE 7/28/67				7/26/67	7/29/67		7/28/67	8-1-67
LM		LM-3 (33) THRU		REVISE DWG	RECORD EO	REWORK	SCRAP	7/25/67	VDI	SUPPORT	RELIAB. GROUP	GROUP LEADER	STRESS GROUP	LIAISON ENGRG	PROJ ENGRG	GOVT
		LM-15 (45)		PRIORITY C		DRAWING TITLE: STANDOFF INSTL. DESCENT STAGE - AFT-THERMAL						DRAWING NO. LDW280-52658				EO NO. B6

7/28 ISSUED BY J RESER / STRAKOSCH - X1153 SECTION VDI GROUP NO. 335 PL 25

01 NAS 9-1100

ENG 32.1 REV 3-65 B7

GRUMMAN AIRCRAFT ENGINEERING CORP.
CODE IDENT NO. 26512
ENGINEERING ORDER *

DWG. NO. LDW280-52658		EO NO.	B7
CONTROL INFO NO. LM5- 16032			

This is a Rev. of E.O.-B6

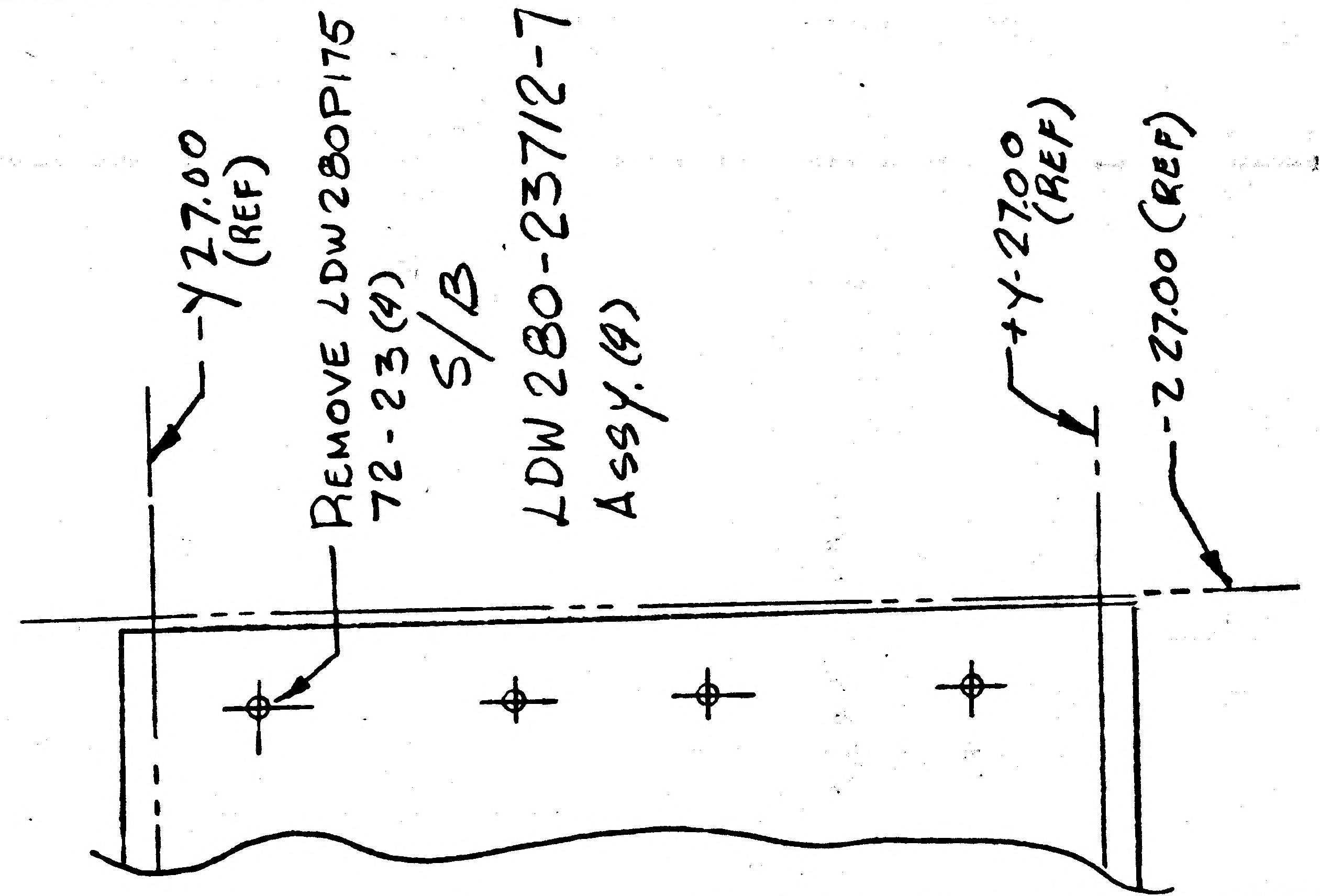

RELEASED BY LIAISON 5

DETAIL SPEC REQ		CL II ENGRG CHG		CL I ENGRG CHG	N LCD 1244

REASON FOR EO
to PROVIDE FOR FITH SHIELD
RTE. 05-131-292

DESCRIPTION OF EO
REF E.O. B6 IN FLD & B/H ON-1
REMOVE LDW 280-23712-7 (4) WAS
LDW 280P17572-23(4)

GAEC C EO RELEASE

MODEL	EFFECTIVITY		
	PROCURING ACTIVITY NO.	GAEC UNIT NO.	SUB CONTR UNIT NO.
LM		LM-3 (33)	
		THRU	
		LM-15 (45)	

DRAWING CHANGE REQD		DISPOSITION OF PARTS										
REVISE DWG	RECORD EO	REWORK	SCRAP	APPROVED BY				—		CH		
✓		✓		DATE	8/24/67			—	8/22/67	8-21-67	8/24/67	8/23/67
					VDI	SUPPORT	RELIAB. GROUP	GROUP LEADER	STRESS GROUP	LIAISON ENGR	PROJ ENGRG	

PRIORITY	DRAWING TITLE	DRAWING NO.	EO NO.
C	STANDOFF INSTL. DESCENT STAGE AFT-THERMAL	LDW280-52658	B7

ISSUED BY J. JARVIS / F.P. SECTION V.D.I. GROUP NO. 335 PL 25

01 NAS 9-1100

ENG 32.1 REV 3-65

GRUMMAN AIRCRAFT ENGINEERING CORP.
CODE IDENT NO. 26512
ENGINEERING ORDER

DWG. NO. LEO 280
EO NO. 817
CONTROL INFO NO. LDW280 B0644

FOR ALL DASH NUMBERS & NEXT ASSYS. IN M/B OF THE FOLLOWING DWGS. REMOVE LM 3 (33) THRU LM 15(45) REQUIREMENTS

	ITEM	DWG. NO.	NEXT ASSY*	TITLE	CHANGE NO
✓	1	LDW280P17460	LDW280-52656	SEE DWG.	C2
✓	2	P17461	-51657		B7
✓	3	P17462	-52658		B8
✓	4	P17463	-52659		B8
✓	5	-52656	-53553		C4
✓	6	-52656	-54553		
✓	7	-51657	-53553		B8
✓	8	-51657	-54553		
✓	9	-52658	-53553		B8
	10	-52658	-54553		
	11	-52659	-53553		B1
	12	-52659	-54553	SEE DWG.	

DETAIL SPEC REQ	☐	CL II ENGRG CHG	☐	CL I ENGRG CHG	✓	LCD 2360	(5)

REASON FOR EO: REDESIGNED END BULKHDS

DESCRIPTION OF EO: REMOVED EFF LM-3 (33) THRU LM-15(45) FROM N/A*

GAEC C EO RELEASE: JK 12/16/67

MODEL	EFFECTIVITY PROCURING ACTIVITY NO.	EFFECTIVITY GAEC UNIT NO.	EFFECTIVITY SUB CONTR UNIT NO.
LM		LM 3(33) THRU LM45(15)	

DRAWING CHANGE REQD REVISE DWG	DRAWING CHANGE REQD RECORD EO	DISPOSITION OF PARTS REWORK	DISPOSITION OF PARTS SCRAP
✓			✓

APPROVED BY								
DATE	12/8/67			12-8-67	12-1-		12/8/67	12-16-67
P	VDI	SUPPORT	RELIAB. GROUP	GROUP LEADER	STRESS GROUP	LIAISON ENGRG	PROJ ENGRG	~~CONT~~

PRIORITY	DRAWING TITLE	DRAWING NO.	EO NO.
C	NOTED	LEO280	817

21 DEC 67
ISSUED BY E.V.R. CASE / P. THORJUSEN x1165 SECTION VDI GROUP NO. 335 PL 25

01

NAS 9-1100

GRUMMAN AIRCRAFT ENGINEERING CORP.
CODE IDENT NO. 26512

ENG 32.1 REV 3-65

ENGINEERING ORDER

DWG. NO. LEO280 | EO NO. 822
CONTROL INFO NO. LDW280B0818

FOR ALL DASH NUMBERS & NEXT ASSYS. IN M/B OF THE FOLLOWING DWGS. REMOVE LM-3 (33) THRU LM-15(45) REQUIREMENTS

ITEM	DNG NO.	NEXT ASSY.	TITLE	CHANGE NO.
✓ 1.	LDW280-52656	LDW280-53509 -54509	SEE DWG.	C6
✓ 2.	-51657	-53509 -54509		B9
✓ 3.	-52658	-53509 -54509		B9
4.	LDW280-52659	-53509 LDW280-54509	SEE DWG.	B2

DETAIL SPEC REQ	☐	CL II ENGRG CHG	☐	CL I ENGRG CHG	☑ LCD 2360

REASON FOR EO: REDESIGNED END BULKHDS

DESCRIPTION OF EO: REMOVED EFF. LM-3(33) THRU LM-15(45) FOR ALL DASH NO'S

GAEC EO RELEASE: JK 12/26/67

MODEL	PROCURING ACTIVITY NO.	GAEC UNIT NO.	SUB CONTR UNIT NO.
LM		LM-3 (33) THRU LM-15 (45)	

DRAWING CHANGE REQD: REVISE DWG ✓ | RECORD EO
DISPOSITION OF PARTS: REWORK | SCRAP ✓

APPROVED BY		SUPPORT	RELIAB. GROUP	GROUP LEADER	STRESS GROUP	LIAISON ENGRG	PROJ ENGRG	GOVT
DATE	12/18/67			P. THORLUSEN 12-18-67	12/20/67		12/18/67	12-26-67
P	V.D.I.							

PRIORITY C | DRAWING TITLE NOTED | DRAWING NO. LEO280 | EO NO. 822

21 DEC 67
ISSUED BY E.V.R.CASE/H.PALUMEYER/P.THORLUSEN x1153 SECTION V.D.I. GROUP NO. 335 PL 35

01

NAS 9-1100

LDW280-52659 B

MODEL OR END ITEM	NEXT ASSY	MODULE OR SER NO.	REQD PER MODULE OR END ITEM
PART NO.		GAEC SCH NO.	

MODEL OR END ITEM	NEXT ASSY	MODULE OR SER NO.	REQD PER MODULE OR END ITEM
LM	LDW280-52553	LM-2 (32)	1
PART NO. LDW 280-52659 - 31		GAEC SCH NO.	

MODEL OR END ITEM	NEXT ASSY	MODULE OR SER NO.	REQD PER MODULE OR END ITEM
LM-	LDW280-52509	LM-2 (32)	1
PART NO. LDW 280-52659-29		GAEC SCH NO. 50	

WORK PKG FUNCTION NO. 110 (E)

SH REV STATUS: FOR DESCRIPTION OF REV SEE SUBQ SH

SHEET	1.00	1.10	1.11	2.00	2.01	3.00	4.00	5.00	6.00
REV	B	B	B	B	B	B	B	B	B
SHEET									
REV									
SHEET									
REV									

LAST SECT LTR USED	T	GRUMMAN REL INFO B	
LAST DASH NO. USED	-31	PRIM NO. 207	VK (001) MP-8-7/16/1

UNLESS OTHERWISE SPECIFIED DIMENSIONS ARE IN INCHES.
TOLERANCE UNLESS SPECIFIED
FRACTIONS - DECIMALS - ANGLES
±1/32 ±.020 ±1/2°
ORIG DWG AUTH
DETAIL SPEC REQUIREMENT
CLASS II ENGRG CHANGE
CLASS I ENGRG CHANGE

CONTRACT NO. NAS 9-1100		LINE ITEM		DOCUMENTATION TYPE II	
DRAWN BY	A. LITVINOFF 1/24/68	THERMO			
LAYOUT BY	H. PALLMEYER				
CHECKED BY	H. Bernstein 2-2-68				
GR LEADER					
GEN DES INT	JHS 8-12-66				
STRUCTURES	NM 8-12-66	PROJ ENGR	RMC 8-13-66		
STRUCTURES		REL GROUP	AC 8-12-66		
WEIGHTS					

GRUMMAN AIRCRAFT ENGRG CORP
BETHPAGE, L. I., NEW YORK

BLANKET INSTALLATION
DESCENT STAGE +Y THERMAL
SHIELD

SIZE	CODE IDENT NO.		
B	26512	LDW280-52659	B
SCALE	NONE	SHEET 1.00 OF 9	

ENG 77.1 12-65

01

NAS 9-1100

REVISIONS FOR CONTINUATION OF REVISIONS SEE SHEET 1.11

CHANGE LTR	ITEM NO.	SHEET NO.	ZONE	GRUMMAN INFO ONLY	DET SPEC	CLASS I	CLASS II	ENGRG ORDER	DESCRIPTION	EFFECTIVITY	DISPOSITION OF EXISTING PARTS REWORK	DISPOSITION OF EXISTING PARTS SCRAP	CHANGED BY AND DATE	ENGRG APPD	GOVT APPD
A	1	1.00 THRU 6.00						EO A1	EO A1 INITIAL DRAWING RELEASE PARTS MADE FROM EO	LM-2 (32) LM-3 (33)	✓		A.LITVINOFF 1-24-68		
	2	1.00 1.10 2.00 THRU 5.00						EO A2	ON-5 ASSY IN F/D & B/M REMOVED LDW280P17463-23 & ADDED LDW280P17463-29						
	3	ALL					✓	EO A3	IN F/D & B/M ADDED -7,-9,-11,-13,-15,-17,-19,-21,-23,-25 & -27 SECT "N-N", "M-M" & "L-L", LDW280P17964-7, LDW280P17463-37,-39,-43,-55 & -57, 5/32 HOLES LDW280P17523-3, LDW280P17524-1, GS26D-1, GW10H-1, GB10J-1, GR11B-1, GW10H-3, GT835P-8, REMOVED -1-3-5 LDW280P17463-29, 1/4 DIA HOLES LDW280P17700-7, LDW280P17523-1, LDW280P17936, ADDED EFFECTIVITY FOR LM-4 - LM-15 REVISED SEAMS & LOC, CORRECTED "Z" LOC (DET X) IN NOTE *1 GT535G-LAS-0004 WAS LDW280P17936-13	LM-2 (32) THRU LM-15 (45)					
	4	1.10, 2.00 3.00						EO A4	ON-11 & -21 REMOVED LDW280P17524-1; ON-9 LDW280P17964-3 WAS LDW280P17964-7 (3 PLCS)		NOT	REQD			
	5	1.10 1.00						EO A5	REF EO A3 FOR -17 N/A LDW280-54509 WAS LDW280-54553	LM-4 (34) THRU LM-15 (45)					
	6	1.10 2.00 THRU 5.00					✓	EO A6 LCD 19-1135	IN F/D & B/M ADDED FOR -25 & -27 LDW280P17463-61 & -63 RESPECTIVELY	LM-2 (32) THRU LM-15 (45)	✓				
	7	1.10 2.00 3.00 THRU 6.00				✓		EO A7 LCD-1244	ADDED -29, -31 SECT "A-A" & "D-D" FOR -7 & -9 REMOVED LM-2 (32) EFF	LM-2 (32)					
	8	ALL				✓		EO A8 LCD-1244	REMOVED EFF FROM -7 & -9 ADDED SECT *-* ADDED LM-3 EFF FOR -17 & -19. LDW280P17463-65 WAS -43 LDW280P17463-69 WAS -37. REMOVED LDW280P17463-63 FROM -27. REMOVED FROM -19: LDW280P17575-11 (10) AN515-6R4 (10) REMOVED FROM -17 LDW280P23712-1 & -3 (5 EA) GT535G-LAS-004 (20). REMOVED FROM -21 GB10J (5) GW10H-1 (5)	LM-3 (33) THRU LM-15 (45)	-17 -19				
	9	1.10 THRU 6.00				✓		EO A9 LCD 1847 ⓔ	FOR -31 ADDED LDW280P18339-9 & -23 ADDED SECT "S-S"	LM-2 (32)	-31				

CHG APPROVED

LTR	GROUP LDR	VEH DES INT	STRUCTURES	STRUCTURES	WEIGHTS	THERMO					
A											
B											

GRUMMAN AIRCRAFT ENGRG CORP., BETHPAGE, L. I., NEW YORK

SIZE	CODE IDENT NO.		
B	26512	LDW280-52659	B ⓐ
SCALE NONE			SHEET 1.10

ENG 77.16 3-66

01

NAS 9-1100

REVISIONS FOR CONTINUATION OF REVISIONS SEE SHEET ______

CHANGE LTR	ITEM NO.	SHEET NO.	ZONE	GRUMMAN INFO ONLY	DET SPEC	CLASS I	CLASS II	ENGRG ORDER	DESCRIPTION	EFFECTIVITY	DISPOSITION OF EXISTING PARTS REWORK	DISPOSITION OF EXISTING PARTS SCRAP	CHANGED BY AND DATE	ENGRG APPD	[illegible] APPD
B	1	1.00 THRU 6.00		P		√		LE0280-817 EO B1 LCD 2360	REMOVED EFF LM-3 (33) THRU LM-15(45) FROM N/A LDW280-53553 & LDW280-54553 ADDED SHEET 1.11	LM-3(33) THRU LM-15(45)		✓	A. LITVINOFF 1-24-68		
	2			P		√		LE0280-822 EO B2 LCD 2360	REMOVED EFF LM-3(33) THRU LM-15(45) FOR ALL DASH NO'S, N/A LDW280-53509 & LDW280-54509						

CHG APPROVED	LTR	GROUP LDR	VEH DES INT	STRUCTURES	STRUCTURES	WEIGHTS	THERMO				
	B										

GRUMMAN AIRCRAFT ENGRG CORP., BETHPAGE, L. I., NEW YORK

SIZE B
CODE IDENT NO. 26512
LDW280-52659 B
SCALE NONE
SHEET 1.11

ENG 77.16 3-66

01 NAS 9-1100

				-31	-29	-25	-15	-13	-11	PART NO.	I&T	CODE IDENT	NOMENCLATURE OR DESCRIPTION	MATERIAL	GOVT SPEC	COML SPEC	STOCK SIZE	PROCESS SYM	FINISH NO.	ZONE
				AR						LDW280P18339-23	E		TAPE ASSY	SEE DWG						20J 6A
				1						LDW280P18339-9			BLANKET ASSY							7B
				3						LDW280P17964-3			COVER							6A 8A&B
				AR					AR	LDW280P17590-11			TAPE							8B
				27						LDW280P17575-11			RETAINER							9A
									41	LDW280P17523-3			CAP							10B 10H
					15					LDW280-23712-3			STANDOFF ASSY							5,7 &8G
						1				LDW280P17463-61			BLANKET ASSY							7B
								1		-57			BLANKET ASSY							7B
							1			-55			INSUL ASSY							16H
						1				LDW280P17463-39			SKIN	SEE DWG						7B
										LDW280-52659-31			BLANKET INSTL					NONE	NONE	8A
										-29			STANDOFF INSTL							8A
									1	-25			SKIN ASSY							8A
									1	-15			BLANKET ASSY							8A
									1	-13			BLANKET ASSY							8A
				1						LDW280-52659-11	E		BLANKET ASSY					NONE	NONE	8A

QTY PER ASSEMBLY

SYM OR NO.	PROCESS SYM OR FINISH NO.	GRUMMAN SPEC OR MILITARY SPEC	SYM OR NO.	PROCESS SYM OR FINISH NO.	GRUMMAN SPEC OR MILITARY SPEC	SYM OR NO.	PROCESS SYM OR FINISH NO.	GRUMMAN SPEC OR MILITARY SPEC

I & T: IDENTIFICATION AND TRACEABILITY IN ACCORDANCE WITH NONE

GRUMMAN AIRCRAFT ENGRG CORP., BETHPAGE, L. I., NEW YORK

SIZE	CODE IDENT NO.		
B	26512	LDW280 52659	B
SCALE NONE			SHEET 2.00

ENG 77.2 5-64

01

NAS 9-1100

QTY PER ASSEMBLY						PART NO.	I&T	CODE IDENT	NOMENCLATURE OR DESCRIPTION	MATERIAL	GOVT SPEC	COML SPEC	STOCK SIZE	PROCESS SYM	FINISH NO.	ZONE
-31	-29	-25	-15	-13	-11											
	30					MS20470A3	E		RIVET	STD PART						
10						MS51957-30			SCREW							
17						AN515-6R4			SCREW	STD PART						
24						GR11B-1			RETAINER	GRUMMAN STD						
24						GW10H-3			WASHER							
27						GW10H-1			WASHER							
27						GB10J-1			BUSHING							
			AR	AR	AR	GS577A-1			STAPLE							
					41	GS26D-1			STANDOFF ASSY							
AR						GT15C-3			TAPE							
	AR					GT835M-8			TAPE							
					AR	GT835P-8			TAPE							
	24					GT535G1AS-0004			TAPE							
2						GT535L-HA-0250	E		TAPE	GRUMMAN STD						

SYM OR NO.	PROCESS SYM OR FINISH NO.	GRUMMAN SPEC OR MILITARY SPEC	SYM OR NO.	PROCESS SYM OR FINISH NO.	GRUMMAN SPEC OR MILITARY SPEC	SYM OR NO.	PROCESS SYM OR FINISH NO.	GRUMMAN SPEC OR MILITARY SPEC

I&T: IDENTIFICATION AND TRACEABILITY IN ACCORDANCE WITH NONE

GRUMMAN AIRCRAFT ENGRG CORP., BETHPAGE, L. I., NEW YORK

SIZE	CODE IDENT NO.		
B	26512	LDW280-52659	B
SCALE NONE			SHEET 2.01

ENG 77.2 5-64

01

NAS 9-1100

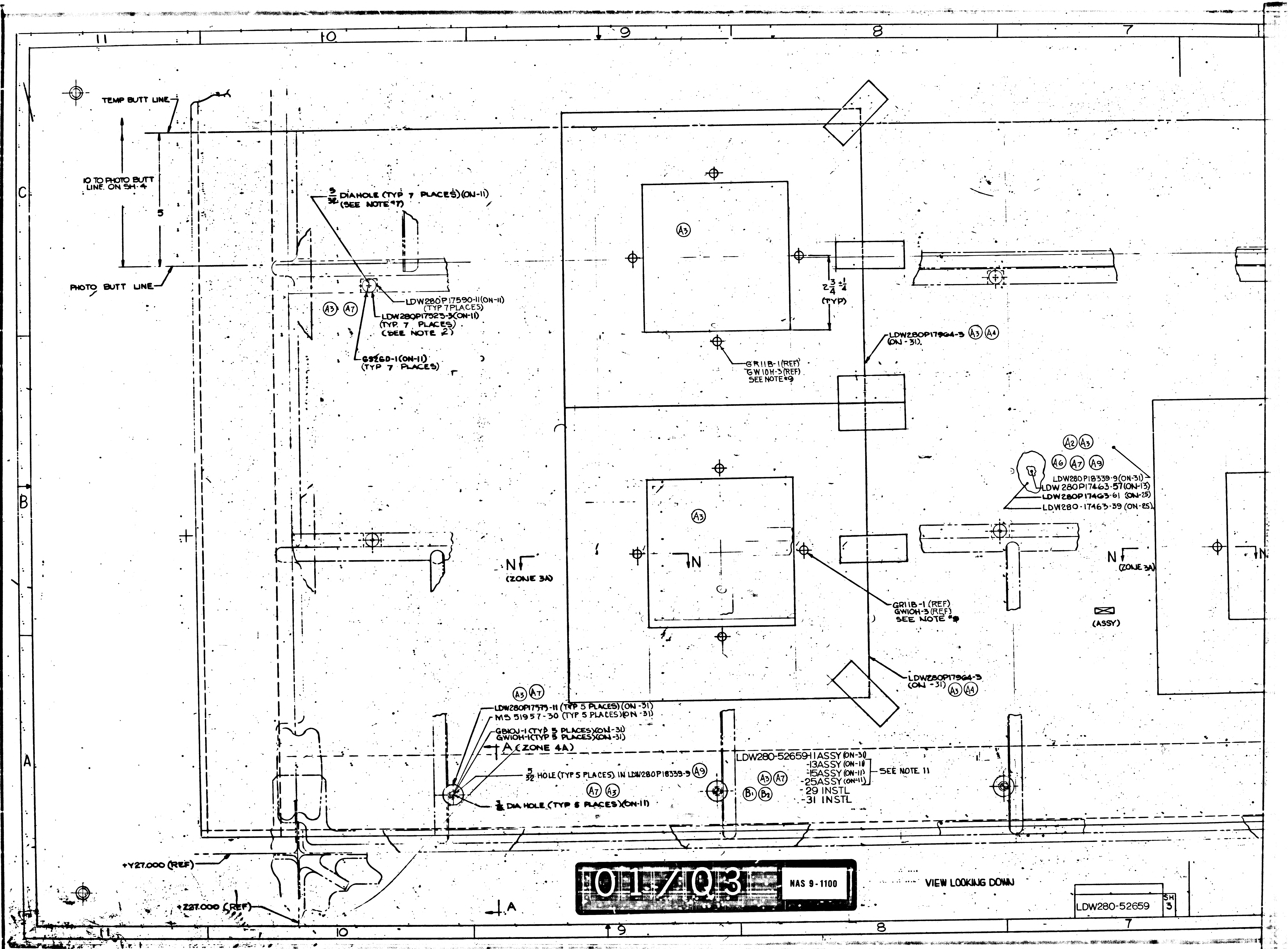
11
10
9
8
7
C
B
A
TEMP BUTT LINE
10 TO PHOTO BUTT LINE ON SH 4
5
PHOTO BUTT LINE
5/32 DIAHOLE (TYP 7 PLACES)(ON-11) (SEE NOTE 7)
LDW280P17590-11(ON-11) (TYP 7 PLACES)
LDW280P17523-3(ON-11) (TYP. 7 PLACES) (SEE NOTE 2)
G526D-1(ON-11) (TYP 7 PLACES)
A3
A7
A3
A4
2 3/4 ± 1/4 (TYP)
GR11B-1(REF) GW10H-3(REF) SEE NOTE 9
LDW280P17964-3 (ON-31)
A2
A3
A6
A7
A9
LDW280P18339-9(ON-31)
LDW280P17463-57(ON-13)
LDW280P17463-61 (ON-25)
LDW280-17463-39 (ON-25)
N
(ZONE 3A)
N
N
(ZONE 3A)
GR11B-1 (REF) GW10H-3 (REF) SEE NOTE 9
(ASSY)
LDW280P17964-3 (ON-31)
LDW280P17575-11 (TYP 5 PLACES) (ON-31)
MS 51957-30 (TYP 5 PLACES)(ON-31)
GB10J-1 (TYP 5 PLACES)(ON-31)
GW10H-1(TYP 5 PLACES)(ON-31)
A (ZONE 4A)
5/32 HOLE (TYP 5 PLACES) IN LDW280P18339-9
A9
A7
A3
5/32 DIA HOLE (TYP 5 PLACES)(ON-11)
LDW280-52659-11ASSY (ON-31)
-13ASSY (ON-11)
-15ASSY (ON-11)
-25ASSY (ON-11)
-29 INSTL
-31 INSTL
SEE NOTE 11
B1
B2
+Y27.000 (REF)
+Z27.000 (REF)
A
01/Q31
NAS 9-1100
VIEW LOOKING DOWN
LDW280-52659
SH 3

7
6
5
4
3
TEMP BUTT LINE
10 TO PHOTO BUTT LINE ON SH 4
5
80
30
C (ZONE 3B)
C
PHOTO BUTT LINE
T (ZONE 4B)
T
Z27.000(REF)
LDW280-28509 (REF)
LDW280P17463-57 -39(-61(REF) A6
LDW280P51102(REF)
LDW280-28666(REF)
GR11B-1 (REF) GW10H-3(REF)
GS2GD-1 (REF)
A7 A9
LDW280P18339-9 (REF)
LDW280P17523-3(REF)
A3
LDW280P17590-11(REF) SEE NOTE 10
SECT C-C (ZONE 5C)
A3 LDW280P17590-11 (2"-4" LG) (ON.-31) (TYP)
A9 LDW280-18339-9(REF)
LDW280P17463-39(REF)
LDW280P17463-61(REF)
LDW280 P17463-57(REF)
SECT T-T (ZONE 5B) NO SCALE A6
A4 LDW280P17964-3(REF)
GR11B-1(REF) GW10H-3(REF)
A9 LDW280P18339-9(REF)
LDW280-52659-11(REF)
SECT N-N A3 A7 ZONES 7B & 9B ROTATED 90° CCW
39-9(ON-31)
63-57(ON-13)
63-61 (ON-25)
3-39 (ON-25)
N (ZONE 3A)
N
SSY)
A3
62
A3 GR11B-1(24) GW10H-3(24) SEE NOTE 9 (ON-31)
A3 A4 LDW280P17964-3 (ON-31)
LDW280-28509(REF)
A9 LDW280P18339-23 (4" TO 6") AS REQ D (ON-31)
1" MIN SPACE (TYP)
+Y27.000 (REF)
-Z27.000 (REF)
A9 LDW280 P18339-9(REF)
GB10J-1(REF) GW10H-1(REF)
LDW280 P51102 (REF) A7
LDW280P17463-39-57(-61(REF) A6
LDW280 P17575-1(REF) A7
MS51957-30(REF)
+Y27.00 (REF)
LDW280-28509(REF)
X196.00(REF)
SECT A-A (ZONE 9A) A3 A7
+Z FWD
+Y END BLKHD
-Y
+Y
-Z
LDW280-5265 (UPPER DECK)
ENGRG REF ONLY NO SCALE
LDW280-52659 SH 3
280-52659 SH 3

02703

NAS 9-1100

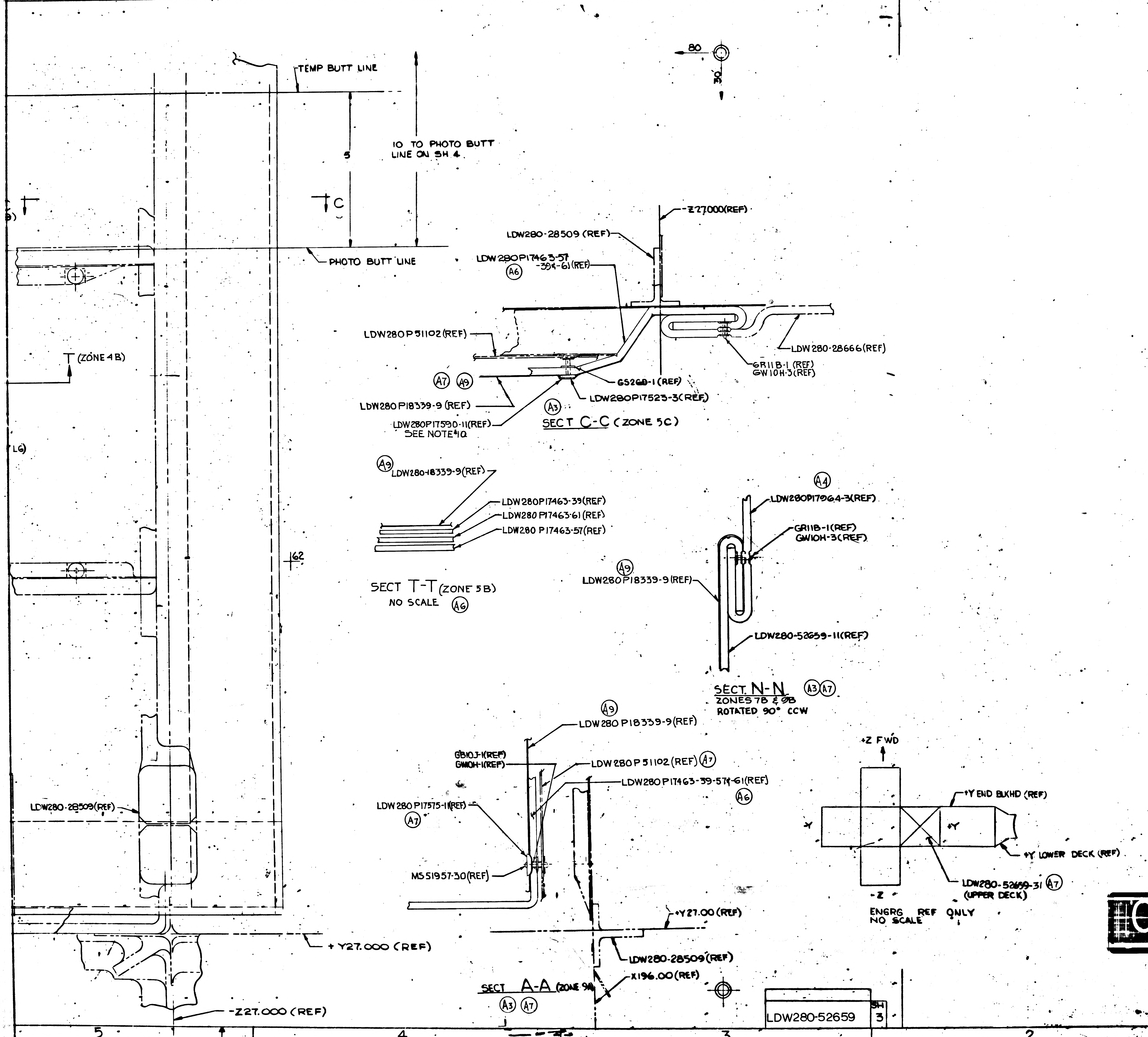
5
4
3
2
TEMP BUTT LINE
10 TO PHOTO BUTT LINE ON SH 4
5
C
PHOTO BUTT LINE
T (ZONE 4B)
80
30
-Z27.000(REF)
LDW280-28509 (REF)
LDW280P17463-57 -39¢-61(REF)
A6
LDW280P51102(REF)
LDW280-28666(REF)
GR11B-1 (REF)
GW10H-3(REF)
A7
A9
GS260-1 (REF)
LDW280P18339-9 (REF)
LDW280P17523-3(REF)
A3
LDW280P17590-11(REF) SEE NOTE 10
SECT C-C (ZONE 5C)
A9
LDW280-18339-9(REF)
LDW280P17463-39(REF)
LDW280P17463-61(REF)
LDW280P17463-57(REF)
SECT T-T (ZONE 5B)
NO SCALE
A6
62
A4
LDW280P17964-3(REF)
GR11B-1(REF)
GW10H-3(REF)
A9
LDW280P18339-9(REF)
LDW280-52659-11(REF)
SECT. N-N
A3 A7
ZONES 7B & 9B
ROTATED 90° CCW
A9
LDW280P18339-9(REF)
GB103-1(REF)
GW10H-1(REF)
LDW280P51102(REF) A7
LDW280P17463-39-57¢-61(REF)
A6
LDW280-28509(REF)
LDW280P17575-1(REF)
A7
MS51957-30(REF)
+Y27.00 (REF)
+ Y27.000 (REF)
LDW280-28509(REF)
X196.00(REF)
-Z27.000 (REF)
SECT A-A (ZONE 9A)
A3 A7
+Z FWD
+Y END BLKHD (REF)
-Y
+Y
+Y LOWER DECK (REF)
-Z
LDW280-52659-31 A7
(UPPER DECK)
ENGRG REF ONLY
NO SCALE
LDW280-52659
3
5
4
3
2

NOTES:

1. BOND GT535G-LAS-0004 TO STRUCTURE AS SHOWN WITH EPON 934 PER LSP14-22500. CURE RANGE I OR ROOM TEMP CURE FOR 7 DAYS PERMITTED.
2. BOND LDW280P17523-3 TO GS260-1 PER LPC280-14.
3. GT535L-HA-0250 SEW TO LDW280P17463-57 AT 3/16 ± 1/16 FROM EDGES OF GT535L-HA-0250 IN ACCORDANCE WITH FED STD #751a & STITCH TYPE 301.
4. DELETE.
5. NO TOOLING HOLES PERMITTED IN PARTS.
6. TOLERANCE ON INSTL LOCATION OF BLANKET TRIM LINES IS ±1/2.
7. ALL ALUMINIZED MYLAR PARTS SHALL BE MADE WITH EXPANDED DIMENSIONS. THE EXPANSION RATIO IS TO BE .050 IN/IN.
   E.G. 10.000 SHN EXPANDS TO 10.500
   ALL ALUMINIZED POLYMIDE PARTS SHALL BE MADE WITH EXPANDED DIMENSIONS. THE EXPANSION RATIO IS TO BE .070 IN/IN.
   E.G. 10.000 SHN EXPANDS TO 10.700
8. WRAP STEMS OF ALL LDW280-23712-3 STANDOFFS WITH ONE LAYER OF GT835M-8 TAPE (ON-29).
9. SEAM, TAPE, INSTALL SNAPS PER LPC280-3
10. COVER ALL EXPOSED STANDOFFS USING 2" STRIPS OF LDW280P17590-11 TAPE (ON-31).
11. FABRICATE -11 BLANKET ASSY PER LPC 280-1

MANUFACTURING OPERATIONS UNLESS OTHERWISE SPECIFIED NOTES CHECKED ✓ APPLY TO THIS DWG.	
RUBBER STAMP PART NUMBER AND ALL OTHER MARKINGS IN REGION MARKED ⊠ USE BOTH SIDES IF NECESSARY.	
FILLET AND INSIDE CORNER RADII TOLERANCES .000R TO .062R ± .010 .062R TO .250R ± .015 OVER .250R ± .030	
DEPTH SHOWN FOR TAPPED HOLES IS FULL THDS. 2-3 IMP THDS. BEYOND PERMISSIBLE.	
EXTERNAL THREAD LENGTH SHOWN INCLUDES 2 IMPERFECT THREADS MAX.	
DO NOT CADMIUM PLATE & PAINT HOLES OR SURFACES MARKED WITH DOUBLE ASTERISK.	
MISMATCH STEP OF ± .005 PERMISSIBLE DUE TO CHANGE OF CUTTERS AT INSIDE INTERSECTING SURFACES.	
DIAMETERS MARKED MUST BE CONCENTRIC WITHIN FULL INDICATOR READING	
HOLES MUST BE KEPT FREE OF CHROME PLATING SOLUTION.	
ALL DIMENSIONS SHOWN TO BE MET AFTER CADMIUM PLATING. THICKNESS OF PLATE .0003 MIN. TO .0005 MAX. MIN. THICKNESS TO BE .0002 ON THREADED AREAS. NO ALLOWANCE FOR PLATING IN HOLES	
SURFACE ROUGHNESS INCLUDING REAMED HOLES PER MIL-STD-10	
FOR ALL DRILLED HOLES	
REMOVE ALL BURRS. BREAK ALL EDGES .005-.030	
INSPECTION INFORMATION MINIMUM PERMISSIBLE AVERAGE EDGE DISTANCE MARKED .XX	
SYMBOL ƒ DENOTES SURFACE TO BE MACHINED	
UNLESS OTHERWISE SPECIFIED TOLERANCE ON FLANGES IS ± 1/32	
LENGTHS OF AN, NAS & MS AC ALY RIVETS SHORTER THAN 1 INCH ARE NOT SPECIFIED.	✓
TOLERANCE ON LOFTED DELINEATIONS IS ± 1/32 UNLESS OTHERWISE NOTED	✓

DWG SIZE 34 X 106

PRINTING INFO ONLY
FULL SIZE SHEET AREA (34 X 11 ...)
1/2 SIZE SHEET AREA (1/4 OF FULL)

PRINT THIS LINE

23

C

B

A

LDW280-52659 B

LDW280-52659 B

LDW280-52659 2H300

03/03

NAS 9-1100

GRUMMAN AIRCRAFT ENGRG CORP. BETHPAGE L.I. NEW YORK

SIZE J	CODE IDENT NO. 26512	LDW280-52659	B
LM MODEL OR END ITEM	SCALE FULL		SHEET 3.00

FOR PHOTO REPRODUCTION

THIS IS AN ORIGINAL DRAWING 3 FRAMES

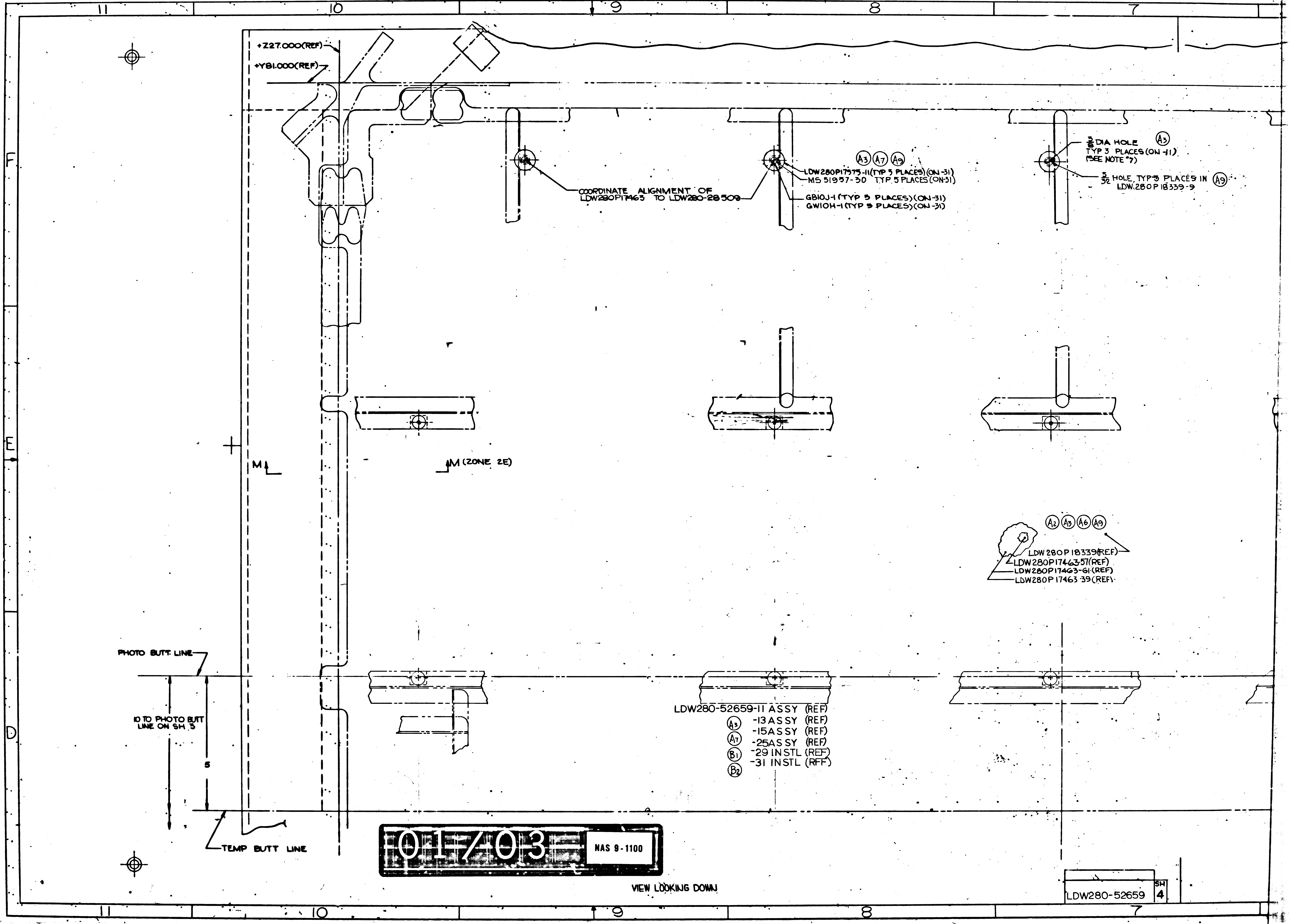
11
10
9
8
7
F
E
D
+Z27.000(REF)
+Y81.000(REF)
COORDINATE ALIGNMENT OF LDW280P17463 TO LDW280-28509
A3 A7 A9
LDW280P17575-11(TYP 5 PLACES)(ON-31)
MS 51957-30 TYP 5 PLACES(ON-31)
GB10J-1 (TYP 5 PLACES)(ON-31)
GW10H-1 (TYP 5 PLACES)(ON-31)
3/8 DIA HOLE A3
TYP 3 PLACES(ON -11)
(SEE NOTE 7)
5/32 HOLE, TYP 5 PLACES IN A9 LDW280P18339-9
M
M (ZONE 2E)
A2 A3 A6 A9
LDW280P18339(REF)
LDW280P17463-57(REF)
LDW280P17463-61(REF)
LDW280P17463-39(REF)
PHOTO BUTT LINE
10 TO PHOTO BUTT LINE ON SH 3
5
TEMP BUTT LINE
LDW280-52659-11 ASSY (REF)
A3 -13 ASSY (REF)
A7 -15 ASSY (REF)
-25 ASSY (REF)
B1 -29 INSTL (REF)
B2 -31 INSTL (RFF)
VIEW LOOKING DOWN
LDW280-52659
SH 4

LDW280-52659 SH 4

01/03

NAS 9-1100

7
6
5
4
3
D
Z27.000 (REF)
+Y81.000 (REF)
DIA HOLE (A3)
TYP 3 PLACES (ON -11)
(SEE NOTE #7)
5/32 HOLE, TYP 3 PLACES IN (A9)
LDW280P18339-9
D (ZONE 3G)
LDW280-28509 (REF)
(A9)
39 (REF)
(REF)
(REF)
(REF)
6326D-1 (ON-11)
TYP 10 PLACES
LDW280P17523-3 (ON -11)
TYP 10 PLACES (SEE NOTE 2)
(A3) (A7)
LDW280P17590-11
TYP 10 PLACES (ON-11)
5/32 DIA HOLE (TYP 10 PLACES) (ON-11)
(SEE NOTE #7) (A3)
(A3)
LDW280P17590-11 N.S (ON-11)
GT835F-8 F.S. (ON-11)
TEMP BUTT LINE
PHOTO BUTT LINE
5.
10 TO PHOTO BUTT LINE ON SH 3
62
LDW280P17463-57 (REF)
LDW280P17463-39 (REF)
(A9)
LDW280P18339-9 (REF)
LDW280P17575-11 (REF)
LDW280-28561 (REF)
LDW280-28509 (REF)
GR118-1 (REF)
GW10H-3 (REF)
1 LAYER WRAP OF GT835M-8 (SEE NOTE #8)
LDW280-23712-3 (REF)
MS20470A3 (REF)
GB10J-1 (ON-31)
GW10H-1 (ON-31)
+Z27.00 (REF)
+Y81.00 (REF)
SECT E-E (ZONE 6G SH 5) (A3)
(TYP 3 PLACES)
LDW280P17463-39 (REF)
LDW280P17463-61 (REF)
(A9)
X196.00 (REF)
LDW280P18339-9 (REF)
+Y81.00 (REF)
GB10J-1 (REF)
GW10H-1 (REF)
LDW280P17575-11 (REF)
LDW280-28509 (REF)
(A7)
(A7)
MS51957-30 (REF)
LDW280P51102 (REF)
LDW280P17463-57 (REF)
SECT D-D (ZONE 6F) (A3)
+Z27.00 (REF)

02/03

NAS 9-1100

280-52659	SH 4

LDW280-52659	SH 4

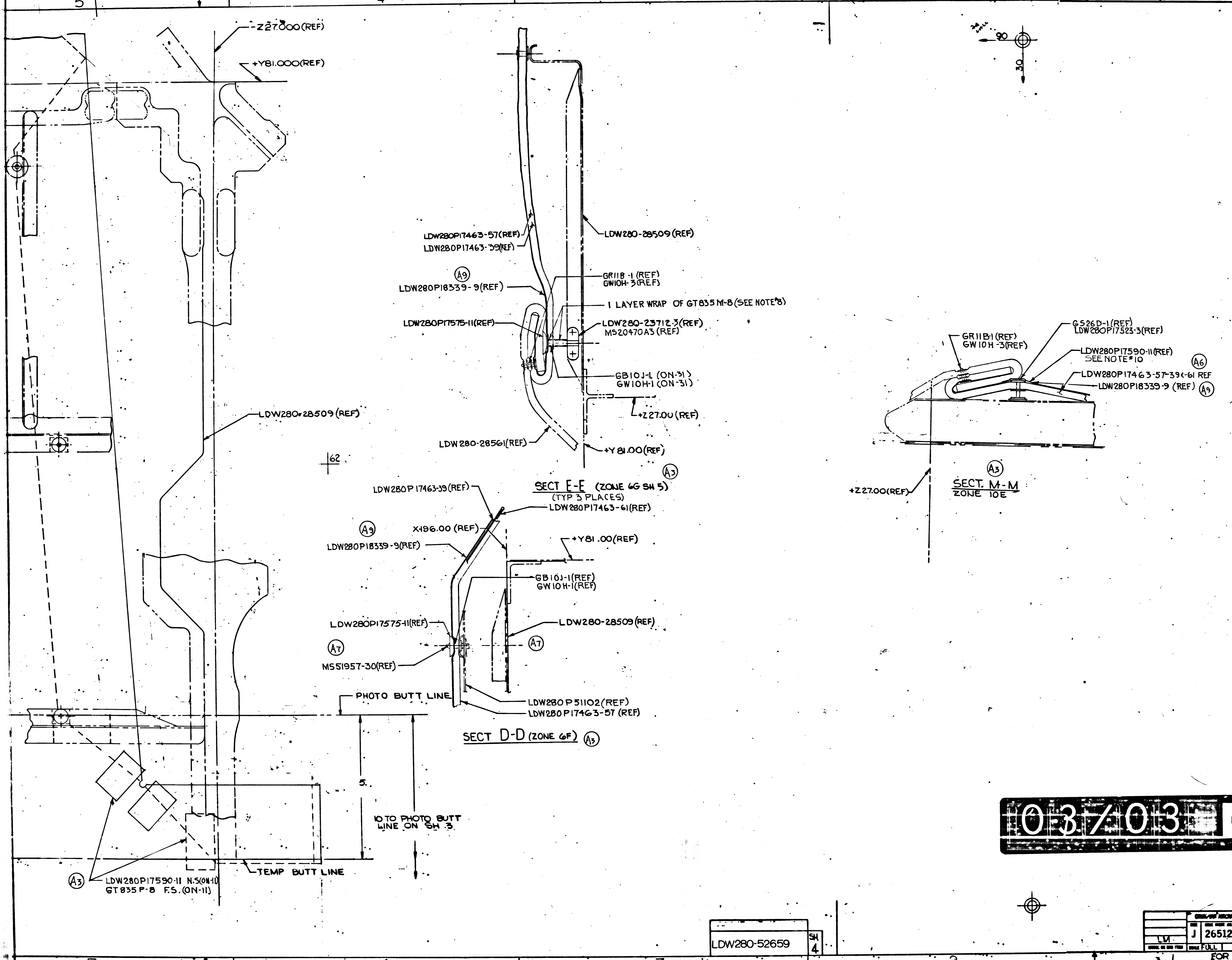
5
4
3
2
Z27.000(REF)
+Y81.000(REF)
90
30
LDW280P17463-57(REF)
LDW280P17463-39(REF)
LDW280-28509(REF)
(A9)
LDW280P18339-9(REF)
GR118-1(REF)
GW10H-3(REF)
1 LAYER WRAP OF GT835M-8 (SEE NOTE 8)
LDW280P17575-11(REF)
LDW280-23712-3(REF)
MS20470A3(REF)
GB10J-1 (ON-31)
GW10H-1 (ON-31)
+Z27.00(REF)
LDW280-28509(REF)
LDW280-28561(REF)
+Y81.00(REF)
62
(A3)
SECT E-E (ZONE 6G SH 5)
(TYP 3 PLACES)
GS26D-1(REF)
LDW280P17523-3(REF)
GR11B-1(REF)
GW10H-3(REF)
LDW280P17590-11(REF)
SEE NOTE 10
(A6)
LDW280P17463-57-39(-61 REF
LDW280P18339-9 (REF) (A9)
+Z27.00(REF)
(A3)
SECT. M-M
ZONE 10E
LDW280P17463-39(REF)
LDW280P17463-61(REF)
(A9)
X196.00 (REF)
LDW280P18339-9(REF)
+Y81.00(REF)
GB10J-1(REF)
GW10H-1(REF)
LDW280P17575-11(REF)
LDW280-28509(REF)
(A7)
(A7)
MS51957-30(REF)
PHOTO BUTT LINE
LDW280P51102(REF)
LDW280P17463-57 (REF)
SECT D-D (ZONE 6F) (A3)
5.
10 TO PHOTO BUTT LINE ON SH 3
TEMP BUTT LINE
(A3)
LDW280P17590-11 N.S.(ON-11)
GT835P-8 F.S.(ON-11)
F
E
D

MANUFACTURING OPERATIONS
UNLESS OTHERWISE SPECIFIED
NOTES CHECKED √ APPLY TO THIS DWG.

PART NUMBER AND ALL OTHER MARKINGS IN REGION MARKED ☒ USE BOTH SIDES IF NECESSARY.

FILLET AND INSIDE CORNER RADII TOLERANCES
.000R TO .062R ± .000
.063R TO .250R ± .015
OVER .250R ± .000

DEPTH SHOWN FOR TAPPED HOLES IS FULL THDS. 2-3 IMP THDS. BEYOND PERMISSIBLE.

EXTERNAL THREAD LENGTH SHOWN INCLUDES 2 IMPERFECT THREADS MAX.

DO NOT CADMIUM PLATE & PAINT HOLES OR SURFACES MARKED WITH DOUBLE ASTERISK.

MISMATCH STEP OF ± .005 PERMISSIBLE DUE TO CHANGE OF CUTTERS AT INSIDE INTERSECTING SURFACES.

DIAMETERS MARKED MUST BE CONCENTRIC WITHIN FULL INDICATOR READING

HOLES MUST BE KEPT FREE OF CHROME PLATING SOLUTION.

ALL DIMENSIONS SHOWN TO BE MET AFTER CADMIUM PLATING. THICKNESS OF PLATE .0003 MIN. TO .0005 MAX. MIN. THICKNESS TO BE .0002 ON THREADED AREAS. NO ALLOWANCE FOR PLATING IN HOLES

125√ SURFACE ROUGHNESS INCLUDING REAMED HOLES PER MIL-STD-10

√ FOR ALL DRILLED HOLES

REMOVE ALL BURRS. BREAK ALL EDGES .005-.030

INSPECTION INFORMATION MINIMUM PERMISSIBLE AVERAGE EDGE DISTANCE MARKED IS

SYMBOL f DENOTES SURFACE TO BE MACHINED

UNLESS OTHERWISE SPECIFIED TOLERANCE ON FLANGES IS ± 1/32

LENGTHS OF AN, NAS & MS AL ALY RIVETS SHORTER THAN 1 INCH ARE NOT SPECIFIED.

TOLERANCE ON LOFTED DELINEATIONS IS

DWG SIZE 34 X 106
PRINTING INFO ONLY
FULL SIZE SHEET AREA (16 X 1 1/4)
PRINT TRIM LINE
27.5
7

03/03
NAS 9-1100

LDW280-52659 SH 4

GRUMMAN AIRCRAFT ENGRG CORP., BETHPAGE, L. I., NEW YORK

L.M.	J	26512	LDW280-52659	B
	SCALE FULL		SHEET 4.00	

FOR PHOTO REPRODUCTION

AN ORIGINAL DRAWING 3 FRAMES

LDW280-52659 B
LDW280-52659 B

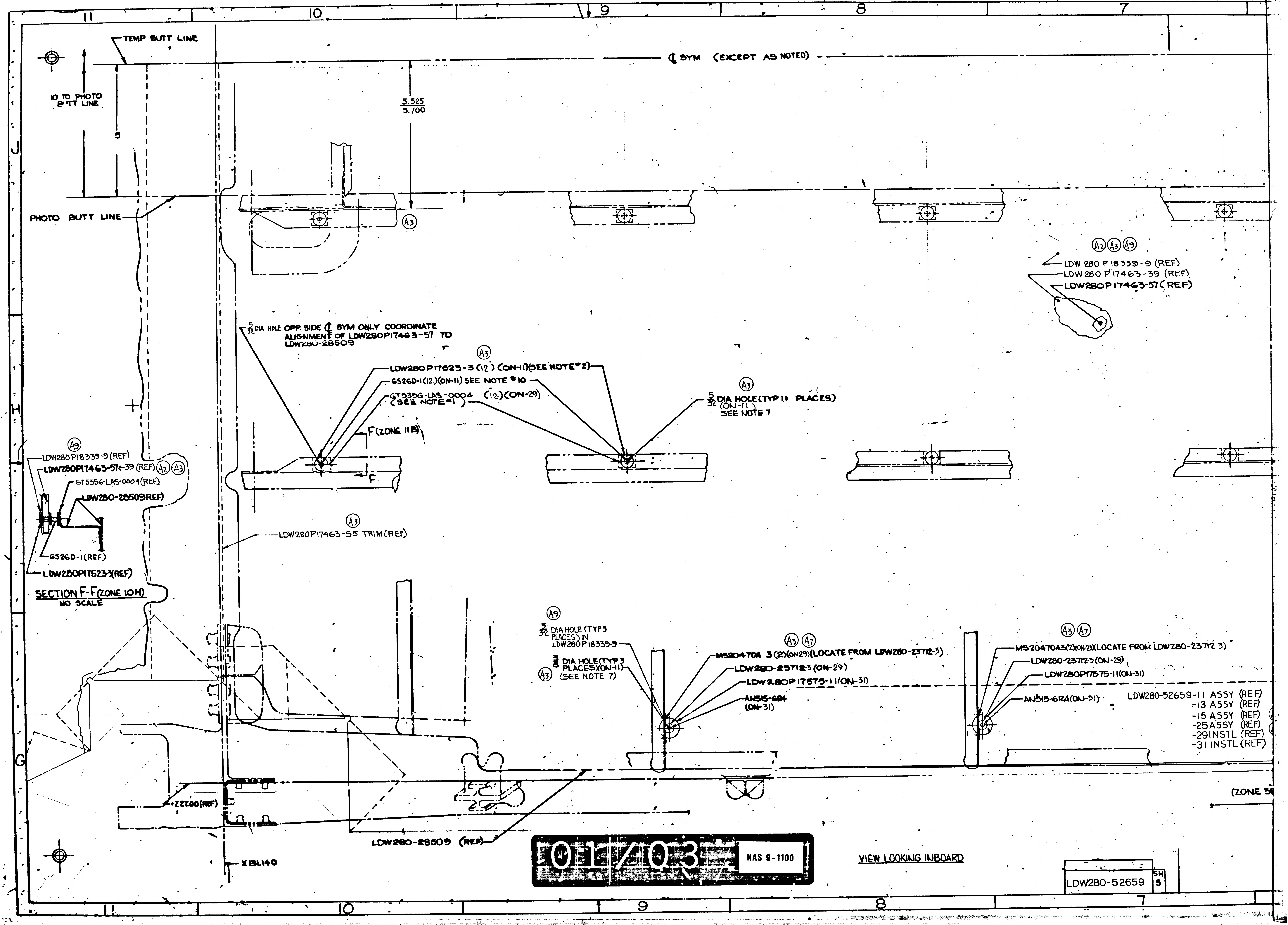
11
10
9
8
7
TEMP BUTT LINE
℄ SYM (EXCEPT AS NOTED)
10 TO PHOTO B'TT LINE
5
5.525
5.700
J
PHOTO BUTT LINE
(A3)
(A2)(A3)(A9)
LDW 280 P18339-9 (REF)
LDW 280 P17463-39 (REF)
LDW280P17463-57 (REF)
5/32 DIA HOLE OPP. SIDE ℄ SYM ONLY COORDINATE ALIGNMENT OF LDW280P17463-57 TO LDW280-28509
(A3)
LDW280P17523-3 (12) (ON-11)(SEE NOTE #2)
GS26D-1(12)(ON-11) SEE NOTE #10
GT535G-LAS-0004 (12)(ON-29) (SEE NOTE #1)
(A3)
5/32 DIA HOLE (TYP 11 PLACES) (ON-11) SEE NOTE 7
H
F (ZONE 11B)
F
(A9)
LDW280P18339-9 (REF)
LDW280P17463-57(-39 (REF) (A2)(A3)
GT535G-LAS-0004(REF)
LDW280-28509(REF)
GS26D-1(REF)
LDW280P17523-3(REF)
SECTION F-F (ZONE 10H)
NO SCALE
(A3)
LDW280P17463-55 TRIM (REF)
(A9)
5/32 DIA HOLE (TYP 3 PLACES) IN LDW280P18339-9
3/8 DIA HOLE (TYP 3 PLACES)(ON-11) (SEE NOTE 7)
(A3)
(A3)(A7)
MS20470A 3 (2)(ON29)(LOCATE FROM LDW280-23712-3)
LDW280-23712-3 (ON-29)
LDW280P17575-11(ON-31)
AN515-6R4 (ON-31)
(A3)(A7)
MS20470A3(2)(ON-29)(LOCATE FROM LDW280-23712-3)
LDW280-23712-3 (ON-29)
LDW280P17575-11(ON-31)
AN515-6R4(ON-31)
LDW280-52659-11 ASSY (REF)
-13 ASSY (REF)
-15 ASSY (REF)
-25 ASSY (REF)
-29 INSTL (REF)
-31 INSTL (REF)
G
(ZONE 3
+Z27.80 (REF)
LDW280-28509 (REF)
X131.140
101/103
NAS 9-1100
VIEW LOOKING INBOARD
LDW280-52659
SH 5
11
10
9
8
7

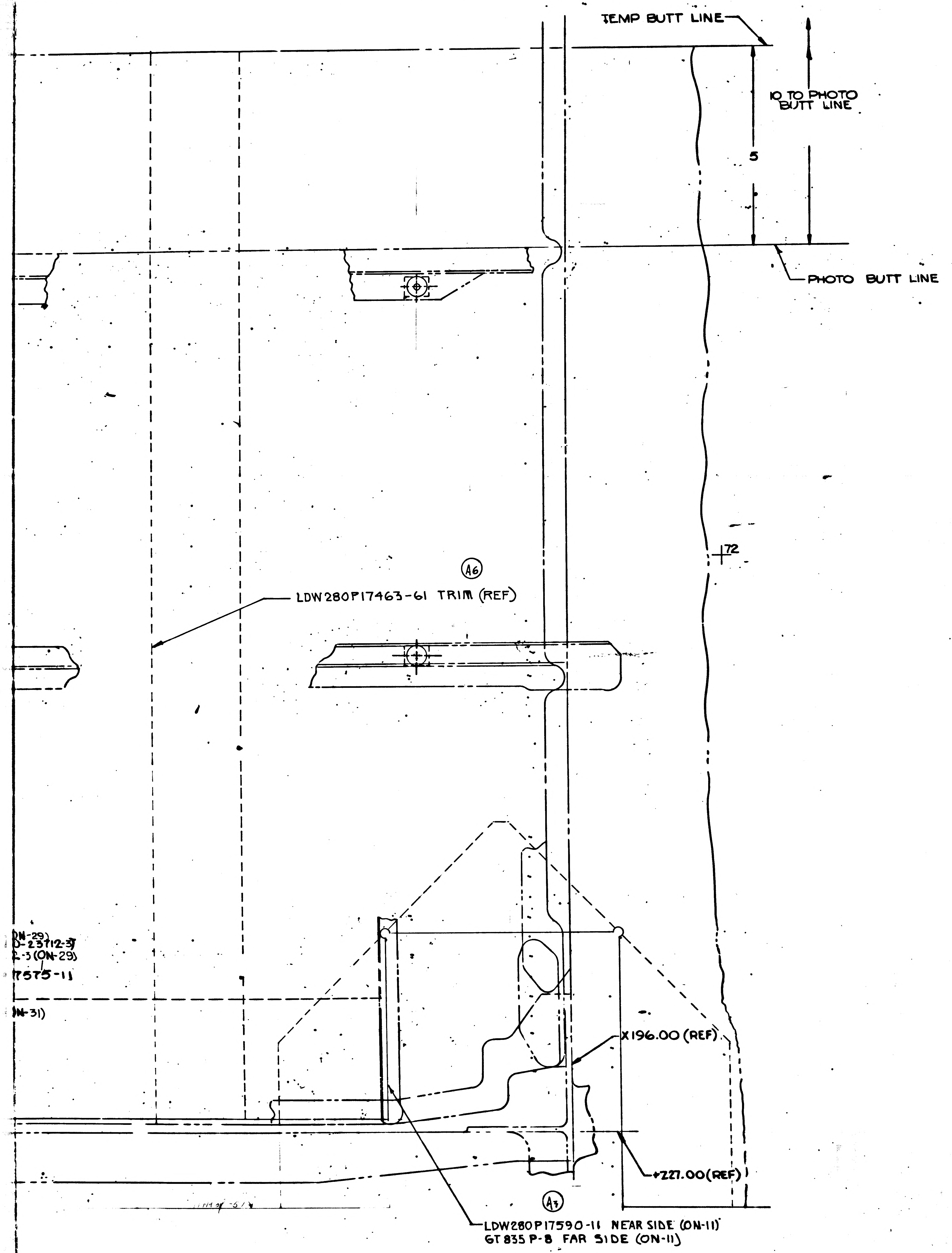
TEMP BUTT LINE
10 TO PHOTO BUTT LINE
5
PHOTO BUTT LINE
72
A6
LDW280P17463-61 TRIM (REF)
(N-29)
D-23712-37
-3 (ON-29)
7575-11
N-31)
X196.00 (REF)
+227.00(REF)
A3
LDW280P17590-11 NEAR SIDE (ON-11)
GT 835 P-8 FAR SIDE (ON-11)

MANUFACTURING OPERATIONS
UNLESS OTHERWISE SPECIFIED
NOTES CHECKED ✓ APPLY TO THIS DWG.

PART NUMBER AND ALL OTHER MARKINGS IN REGION MARKED ☒ USE BOTH SIDES IF NECESSARY.

FILLET AND INSIDE CORNER RADII TOLERANCES
[illegible] TO [illegible] ± [illegible]
[illegible] TO [illegible] ± [illegible]
OVER [illegible] ± [illegible]

DEPTH SHOWN FOR TAPPED HOLES IS FULL THDS. 2-3 IMP THDS. BEYOND PERMISSIBLE.

EXTERNAL THREAD LENGTH SHOWN INCLUDES 2 IMPERFECT THREADS MAX.

DO NOT CADMIUM PLATE & PAINT HOLES OR SURFACES MARKED WITH DOUBLE ASTERISK.

MISMATCH STEP OF ± [illegible] PERMISSIBLE DUE TO CHANGE OF CUTTERS AT INSIDE INTERSECTING SURFACES.

DIAMETERS MARKED MUST BE CONCENTRIC WITHIN FULL INDICATOR READING

HOLES MUST BE KEPT FREE OF CHROME PLATING SOLUTION.

ALL DIMENSIONS SHOWN TO BE MET AFTER CADMIUM PLATING. THICKNESS OF PLATE [illegible] MIN. TO [illegible] MAX. MIN. THICKNESS TO BE [illegible] ON THREADED AREAS. NO ALLOWANCE FOR PLATING ON HOLES

SURFACE ROUGHNESS INCLUDING REAMED HOLES PER MIL-STD-10

FOR ALL DRILLED HOLES

REMOVE ALL BURRS. BREAK ALL EDGES [illegible]

INSPECTION INFORMATION MINIMUM PERMISSIBLE AVERAGE EDGE DISTANCE MARKED IS

SYMBOL ∫ DENOTES SURFACE TO BE MACHINED

UNLESS OTHERWISE SPECIFIED TOLERANCE ON FLANGES IS ± 1/32

LENGTHS OF AN, NAS & MS AL ALY RIVETS GREATER THAN 1 INCH ARE NOT SPECIFIED.

TOLERANCE ON LOFTED DELINEATIONS IS

PRINTING INFO ONLY
FULL SIZE SHEET AREA OR X
PRINT TRIM LINE

03/03 NAS 9-1100

GRUMMAN AIRCRAFT ENGRG CORP. BETHPAGE L.I. NEW YORK			
SIZE J	CODE IDENT NO 26512	LDW280-52659	B
MODEL OR END ITEM LM	SCALE FULL	SHEET 5.00	

LDW280-52659 SH 5

LDW280-52659 B

LDW280-52659 B

FOR PHOTO-REPRODUCTION

THIS IS AN ORIGINAL DRAWING 3 FRAMES

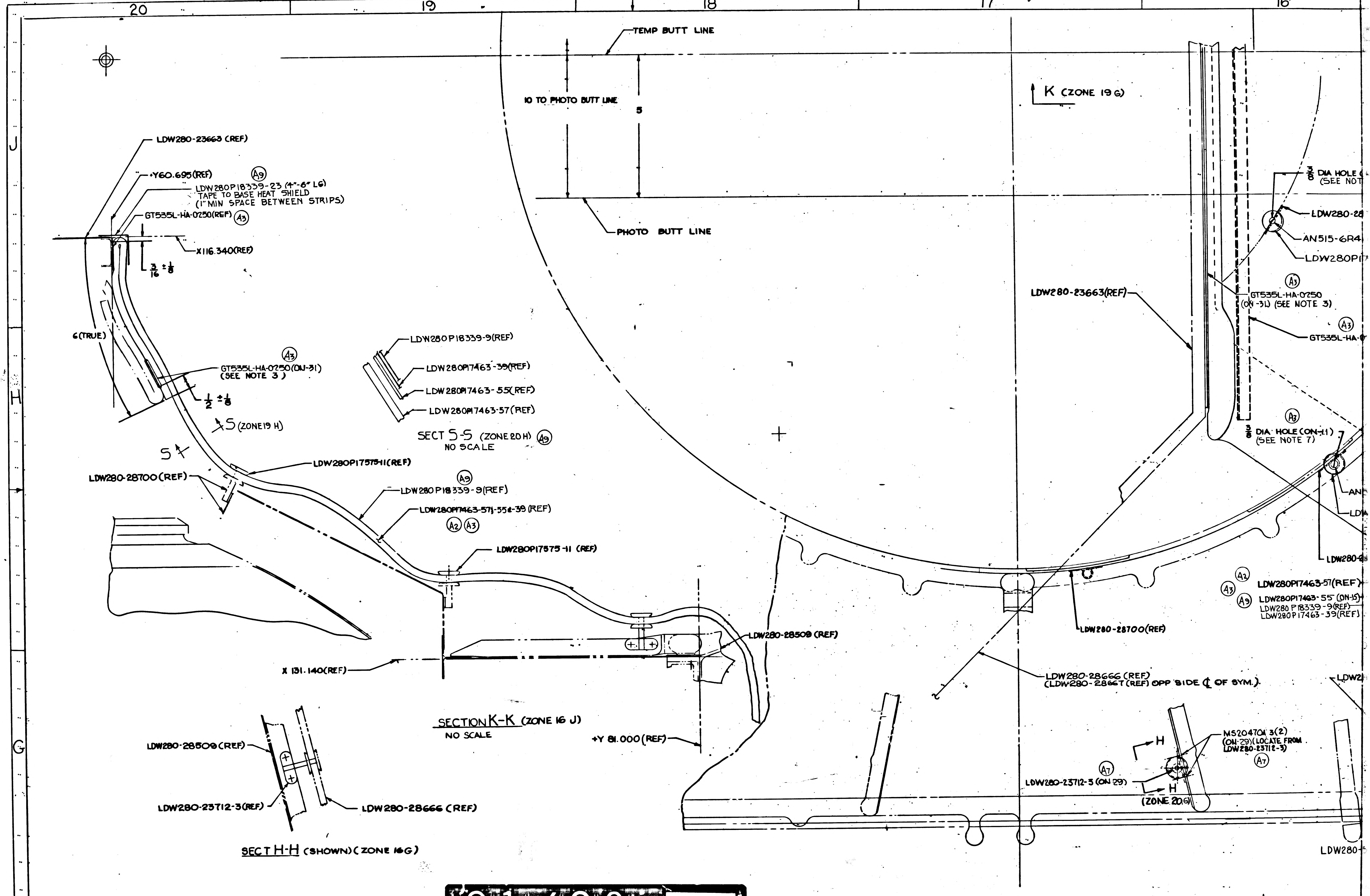

20
19
18
17
16
J
H
G
TEMP BUTT LINE
10 TO PHOTO BUTT LINE
5
PHOTO BUTT LINE
K (ZONE 19 G)
LDW280-23663 (REF)
+Y60.695(REF)
A9
LDW280P18339-23 (4"-6" LG)
TAPE TO BASE HEAT SHIELD
(1" MIN SPACE BETWEEN STRIPS)
GT535L-HA-0250(REF)
A3
X116.340(REF)
3/16 ± 1/8
6(TRUE)
GT535L-HA-0250(ON-31)
(SEE NOTE 3)
1/2 ± 1/8
S (ZONE 19 H)
S
LDW280P18339-9(REF)
LDW280P17463-39(REF)
LDW280P17463-55(REF)
LDW280P17463-57(REF)
SECT S-S (ZONE 20 H) A9
NO SCALE
LDW280P17575-11(REF)
LDW280-28700(REF)
A9
LDW280 P18339-9(REF)
LDW280P17463-57,-55&-39 (REF)
A2 A3
LDW280P17575-11 (REF)
LDW280-28509 (REF)
X 131.140(REF)
SECTION K-K (ZONE 16 J)
NO SCALE
+Y 81.000 (REF)
LDW280-28509(REF)
LDW280-23712-3(REF)
LDW280-28666 (REF)
SECT H-H (SHOWN) (ZONE 16 G)
LDW280-23663(REF)
3/8 DIA HOLE
(SEE NOT
LDW280-28
AN515-6R4
LDW280P17
A3
GT535L-HA-0250
(ON-31) (SEE NOTE 3)
A3
GT535L-HA-0
A7
3/8 DIA HOLE (ON-11)
(SEE NOTE 7)
AN
LDW
LDW280-28
A2
A3
A9
LDW280P17463-57(REF)
LDW280P17463-55 (ON-15)
LDW280 P18339-9(REF)
LDW280 P17463-39(REF)
LDW280-28700(REF)
LDW280-28666 (REF)
(LDW280-28667(REF) OPP SIDE ℄ OF SYM.)
LDW2
H
MS20470A 3(2)
(ON-29) (LOCATE FROM
LDW280-23712-3)
A7
A7
LDW280-23712-3 (ON 29)
H
(ZONE 20 G)
LDW280

01/02 NAS 9-1100

VIEW LOOKING UP

LDW280-52659 SH 6

LDW280-52659 SH 6

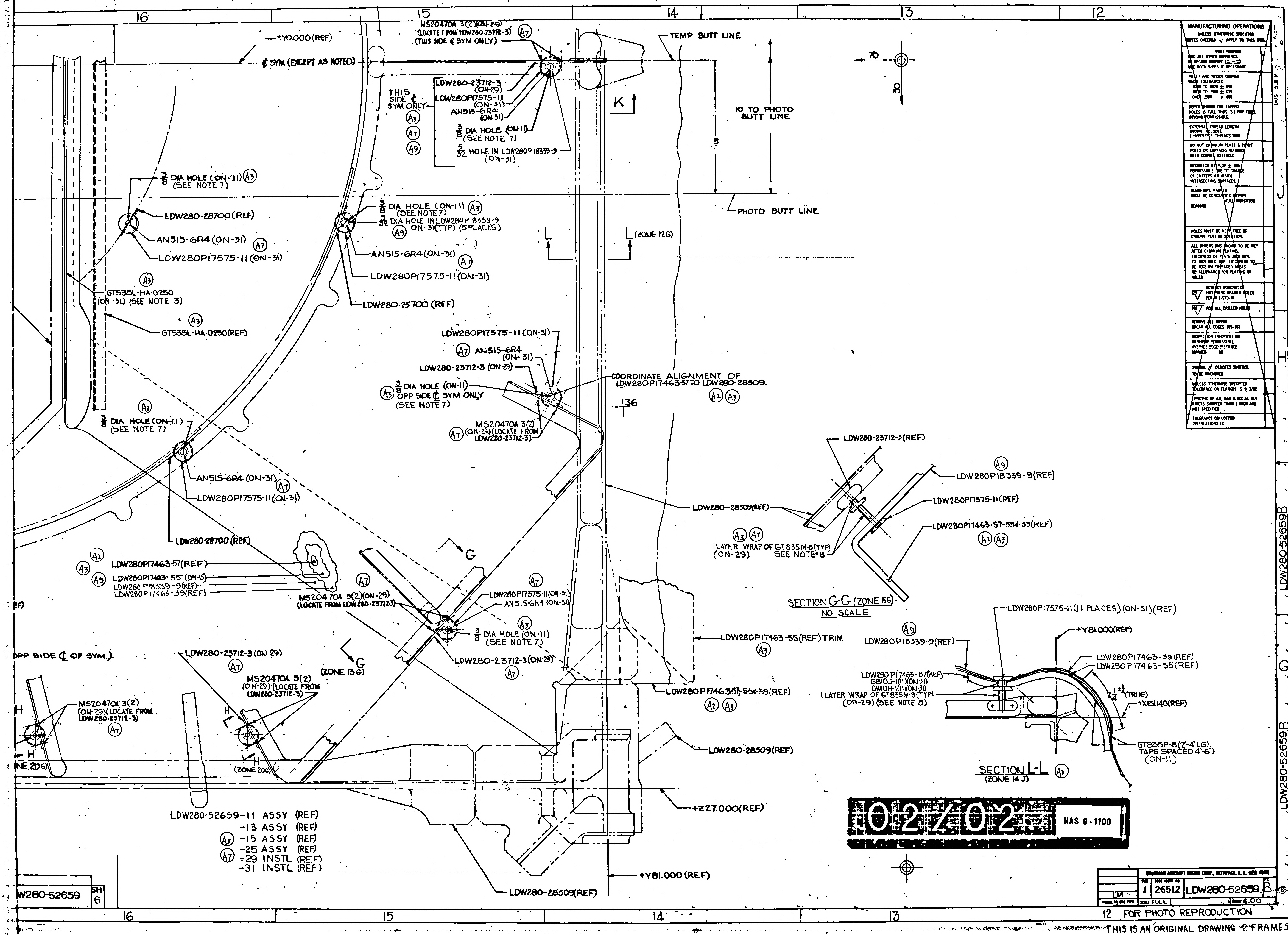
16
15
14
13
12
±Y0.000(REF)
℄ SYM (EXCEPT AS NOTED)
MS20470A 3(2)(ON-29)
(LOCATE FROM LDW280-23712-3)
(THIS SIDE ℄ SYM ONLY)
A7
LDW280-23712-3 (ON-29)
LDW280P17575-11 (ON-31)
AN515-6R4 (ON-31)
THIS SIDE ℄ SYM ONLY
A3
A7
A9
3/8 DIA HOLE (ON-11) (SEE NOTE 7)
5/32 HOLE IN LDW280P18339-9 (ON-31)
TEMP BUTT LINE
K
10 TO PHOTO BUTT LINE
5
PHOTO BUTT LINE
70
30
3/8 DIA HOLE (ON-11) (SEE NOTE 7)
LDW280-28700(REF)
AN515-6R4(ON-31)
LDW280P17575-11(ON-31)
GT535L-HA-0250 (ON-31) (SEE NOTE 3)
GT535L-HA-0250(REF)
3/8 DIA HOLE (ON-11) (SEE NOTE 7)
5/32 DIA HOLE IN LDW280P18339-9 ON-31(TYP) (5 PLACES)
AN515-6R4(ON-31)
LDW280P17575-11(ON-31)
LDW280-25700 (REF)
L
L (ZONE 12G)
LDW280P17575-11 (ON-31)
AN515-6R4 (ON-31)
LDW280-23712-3 (ON-29)
3/8 DIA HOLE (ON-11) OPP SIDE ℄ SYM ONLY (SEE NOTE 7)
COORDINATE ALIGNMENT OF LDW280P17463-57 TO LDW280-28509.
A2
36
MS20470A 3(2) (ON-29)(LOCATE FROM LDW280-23712-3)
3/8 DIA HOLE (ON-11) (SEE NOTE 7)
AN515-6R4 (ON-31)
LDW280P17575-11(ON-31)
LDW280-28700(REF)
LDW280-28509(REF)
LDW280P17463-57(REF)
LDW280P17463-55 (ON-15)
LDW280 P18339-9(REF)
LDW280 P17463-39(REF)
G
MS20470A 3(2)(ON-29) (LOCATE FROM LDW280-23712-3)
LDW280P17575-11(ON-31)
AN515-6R4 (ON-31)
3/8 DIA HOLE (ON-11) (SEE NOTE 7)
LDW280-23712-3(ON-29)
OPP SIDE ℄ OF SYM.
LDW280-23712-3 (ON-29)
MS20470A 3(2) (ON-29) (LOCATE FROM LDW280-23712-3)
(ZONE 13G)
MS20470A 3(2) (ON-29) (LOCATE FROM LDW280-23712-3)
H
(ZONE 20G)
LDW280P17463-55(REF) TRIM
LDW280P17463-57, -55, -39 (REF)
LDW280-28509(REF)
+Z27.000(REF)
+Y81.000 (REF)
LDW280-28509(REF)
LDW280-52659-11 ASSY (REF)
-13 ASSY (REF)
-15 ASSY (REF)
-25 ASSY (REF)
-29 INSTL (REF)
-31 INSTL (REF)
LDW280-23712-3(REF)
LDW280P18339-9(REF)
LDW280P17575-11(REF)
LDW280P17463-57-55-39(REF)
1 LAYER WRAP OF GT835M-8(TYP) (ON-29) SEE NOTE 8
SECTION G-G (ZONE 15G)
NO SCALE
LDW280P17575-11(11 PLACES) (ON-31)(REF)
+Y81.000(REF)
LDW280P18339-9(REF)
LDW280P17463-39(REF)
LDW280P17463-55(REF)
LDW280 P17463-57(REF)
GB10J-1(11)(ON-31)
GW10H-1(11)(ON-31)
1 LAYER WRAP OF GT835M-8(TYP) (ON-29) (SEE NOTE 8)
2 1/4 (TRUE)
+X131.140(REF)
GT835P-8(2'-4' LG). TAPE SPACED 4'-6' (ON-11)
SECTION L-L (ZONE 14J)
02/02
NAS 9-1100
LDW280-52659B
J
H
G
DWG SIZE
PRINTING INFO ONLY

MANUFACTURING OPERATIONS
UNLESS OTHERWISE SPECIFIED NOTES CHECKED ✓ APPLY TO THIS DWG.

PART NUMBER AND ALL OTHER MARKINGS IN REGION MARKED ▭ USE BOTH SIDES IF NECESSARY.

FILLET AND INSIDE CORNER RADII TOLERANCES
.016R TO .062R ± .010
.063R TO .250R ± .015
OVER .250R ± .030

DEPTH SHOWN FOR TAPPED HOLES IS FULL THDS. 2-3 IMP THDS. BEYOND PERMISSIBLE.

EXTERNAL THREAD LENGTH SHOWN INCLUDES 2 IMPERFECT THREADS MAX.

DO NOT CADMIUM PLATE & PAINT HOLES OR SURFACES MARKED WITH DOUBLE ASTERISK.

MISMATCH STEP OF ± .005 PERMISSIBLE DUE TO CHANGE OF CUTTERS AT INSIDE INTERSECTING SURFACES.

DIAMETERS MARKED MUST BE CONCENTRIC WITHIN FULL INDICATOR READING

HOLES MUST BE KEPT FREE OF CHROME PLATING SOLUTION.

ALL DIMENSIONS SHOWN TO BE MET AFTER CADMIUM PLATING. THICKNESS OF PLATE .0003 MIN. TO .0005 MAX. MIN. THICKNESS TO BE .0002 ON THREADED AREAS. NO ALLOWANCE FOR PLATING IN HOLES

125 SURFACE ROUGHNESS INCLUDING REAMED HOLES PER MIL-STD-10

200 FOR ALL DRILLED HOLES

REMOVE ALL BURRS. BREAK ALL EDGES .015-.031

INSPECTION INFORMATION MINIMUM PERMISSIBLE AVERAGE EDGE-DISTANCE MARKED IS

SYMBOL √ DENOTES SURFACE TO BE MACHINED

UNLESS OTHERWISE SPECIFIED TOLERANCE ON FLANGES IS ± 1/32

LENGTHS OF AN, NAS & MS AL ALY RIVETS SHORTER THAN 1 INCH ARE NOT SPECIFIED.

TOLERANCE ON LOFTED DELINEATIONS IS

	GRUMMAN AIRCRAFT ENGRG. CORP., BETHPAGE, L. I., NEW YORK			
LM	SIZE J	CODE IDENT NO. 26512	LDW280-52659	B
	SCALE FULL		SHEET 6.00	

LDW280-52659 SH 6

FOR PHOTO REPRODUCTION

THIS IS AN ORIGINAL DRAWING 2 FRAMES

LDW280-52659B

LDW280-52659 SH 6

NAS 9-1100

ENG 32.2 REV 3-66

GRUMMAN AIRCRAFT ENGINEERING CORP.
CODE IDENT NO. 26512
ENGINEERING ORDER

DWG. NO.	LDW280-52659	EO NO.	A1
CONTROL INFO NO.	LDW 280-9568		

CREATE LDW280-52659 IDENTICAL TO LDW280-51659
(INC. EO A2)
EXCEPT LDW 280-52659-1 STAND OFF INSTL. & -3
BLANKET INSTL. REPLACE LDW 280-51659-1
& -3 RESPECTIVELY. LDW 280-51659-5 BLANKET ASSY
USED ON LDW280-52659-3 BLANKET INST.
REVISE LOCATION OF ZEE MEMBERS AS SHOWN &
STANDOFF LOCATIONS ACCORDINGLY

				REQ/MOD.
FOR LDW 280-52659-1	N/A	LDW280-52509	LEM-2(32)	1
		LDW280-53509	LEM-3(33)	1
FOR LDW 280-52659-3	N/A	LDW280-52553	LEM-2(32)	1
		LDW280-52553	LEM-3(33)	1

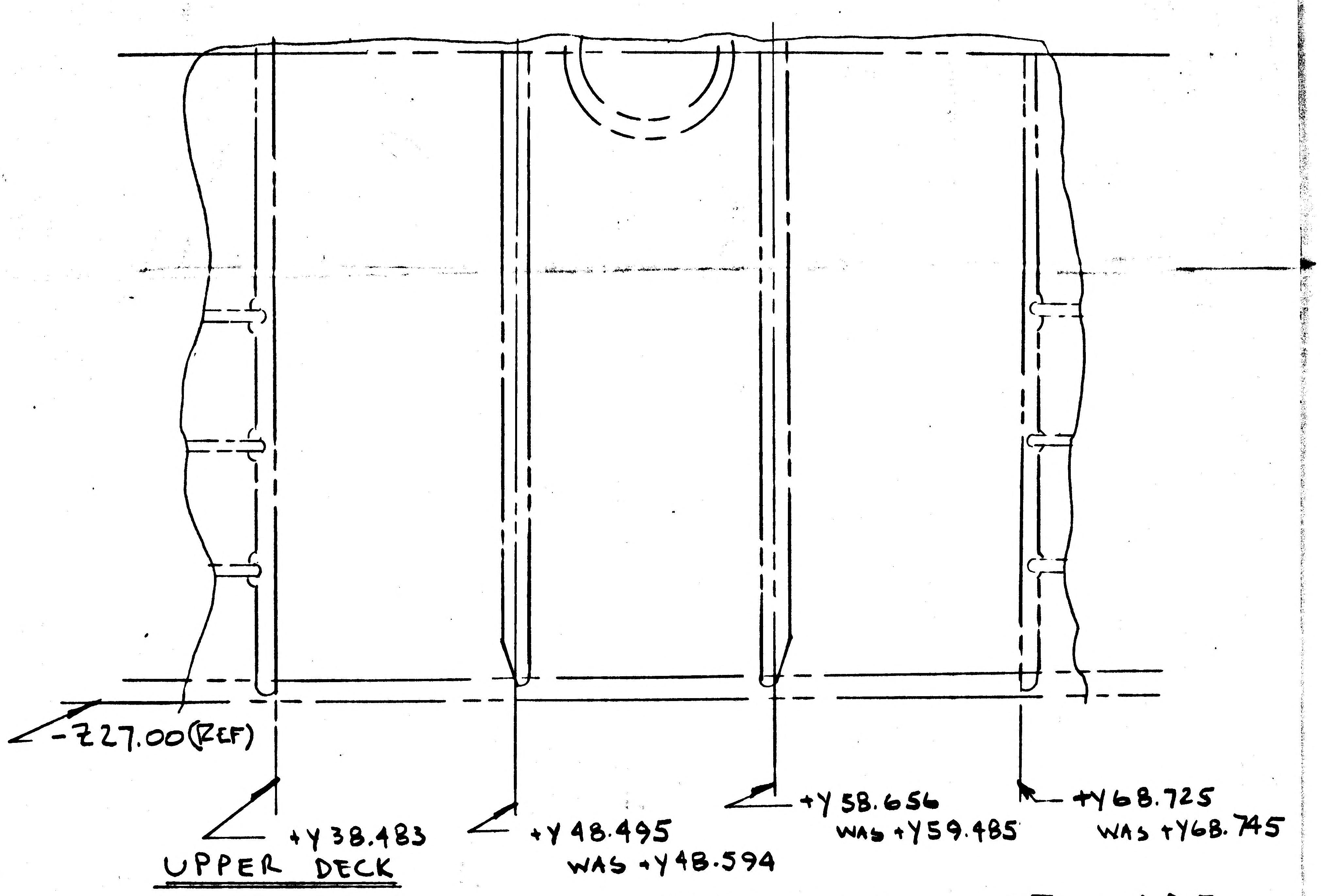

*DRAWING NOT MADE

②

DETAIL SPEC REQ		CL II ENGRG CHG		CL I ENGRG CHG			

REASON FOR EO	DESCRIPTION OF EO	GAEC EO RELEASE
TO ACCOMMODATE INSTL OF THERMAL SHIELDING	EO A1 INITIAL DRAWING RELEASE PARTS MADE FROM EO.	C MF FK 8/13/6 52-15 SH-10F3

MODEL	PROCURING ACTIVITY NO.	GAEC UNIT NO.	SUB CONTR UNIT NO.	DRAWING CHANGE REQD: REVISE DWG	RECORD EO	DISPOSITION OF PARTS: REWORK	SCRAP
LEM		LEM-2(32) LEM-3(33)		*		*	

APPROVED BY	JAB	LBY			VM		RMC(EJ)	AC
DATE	8/12/66	9/16/66			8-12-66		8-13	8-12-66
8/12/66	VOI	~~SUPPORT~~ WTS	RELIAB. GROUP	GROUP LEADER	STRESS GROUP	LIAISON ENGRG	PROJ ENGRG	

PRIORITY	DRAWING TITLE	DRAWING NO.	EO NO.
C	SHIELD INSTL. DESCENT STAGE R.H. THERMAL	LDW280-52659	A1

ISSUED BY C. RUSSO / J. STRAKOSCH SECTION VOI GROUP NO. 335 PL 35

GRUMMAN AIRCRAFT ENGINEERING CORP.
CODE IDENT NO. 26512
ENG 32.1 REV 3-65
ENGINEERING ORDER EMF-A

DWG. NO.	LDW280-52659	EO NO.	A4
CONTROL INFO NO.	LDW280A-4303		

ON-11 & -21 REMOVE LDW280P17524-1

ON-9 LDW280P17964-3 WAS LDW280P17964-7; 3 PLCS

DETAIL SPEC REQ	☐	CL II ENGRG CHG	☐	CL I ENGRG CHG	☐	2

REASON FOR EO	DESCRIPTION OF EO	GAEC EO RELEASE
TO MAKE DWG AGREE WITH TEMPLATE	ON-11 & -21 REMOVED LDW280P17524-1 ; ON-9 LDW280P17964-3 WAS LDW280P17964-7 ; (3 PLCS)	FR 12/16/5

MODEL	PROCURING ACTIVITY NO.	GAEC UNIT NO.	SUB CONTR UNIT NO.
LM		LM-2(32)	
LM		THRU	
LM		LM-15(45)	

DRAWING CHANGE REQD		DISPOSITION OF PARTS		APPROVED BY								
✓		NOT	REQ'D	DATE	12/13/66	12/13		12/12/66	12/13/66		12-13-66	12-13-66
REVISE DWG	RECORD EO	REWORK	SCRAP	1	VDI	~~SUPPORT~~ THERM	RELIAB. GROUP	GROUP LEADER	STRESS GROUP	LIAISON ENGRG	PROJ ENGRG	~~GOVT~~

PRIORITY	DRAWING TITLE	DRAWING NO.	EO NO.
C	STANDOFF INST'L D/S +Y THERMAL SHIELD	LDW280-52659	A4

ISSUED BY T. AMBROSIO/STRAKOSCH X1153 SECTION V.D.1. GROUP NO. 335 PL 35

01 NAS 9-1100

ENG 32.1 REV 3-65

GRUMMAN AIRCRAFT ENGINEERING CORP.
CODE IDENT NO. 26512
ENGINEERING ORDER

DWG. NO. LDW280-52659 *
EO NO. A5
CONTROL INFO NO. LM-5-11927

THIS E.O. REVISES E.O. A3 CORRECT N/A FOR -17

PART NO.	NEXT ASSY	NO. REQ'D / MOD	MODULE
LDW280-52659-17	LDW280-54509 (WAS) LDW280-54553	1	LM-4 THRU LM-15 INCL

RELEASED BY LIAISON

DETAIL SPEC REQ ☐ CL II ENGRG CHG ☐ CL I ENGRG CHG ☐ 5

REASON FOR EO: INCORRECT N/A CALLEDOUT

DESCRIPTION OF EO: REF. EO. A3 FOR -17 N/A LDW280-54509 WAS LDW280-54553

GAEC EO RELEASE ✓ c JK

MODEL	PROCURING ACTIVITY NO.	GAEC UNIT NO.	SUB CONTR UNIT NO.
LM		LM-4 (34)	
		THRU	
		LM-15 (45)	

DRAWING CHANGE REQD: REVISE DWG ✓ RECORD EO

DISPOSITION OF PARTS: NOT REQD (REWORK / SCRAP)

APPROVED BY: WT

DATE: 1 VDI

SUPPORT	RELIAB. GROUP	GROUP LEADER	STRESS GROUP	LIAISON ENGRG	PROJ ENGRG	GOVT
			3-2-67	3-1-67	3-3-67	3-2-67

PRIORITY: C

DRAWING TITLE: BLANKET INST'L DESCENT STAGE +Y THERMAL SHIELD

DRAWING NO.: LDW280-52659

EO NO.: A5

ISSUED BY H. PALLMEYER X4709 SECTION VEH DES INT GROUP NO. 335 PL 5

01 NAS 9-1100

8

ENG 32.1 REV 3-65

GRUMMAN AIRCRAFT ENGINEERING CORP.
CODE IDENT NO. 26512
ENGINEERING ORDER

DWG. NO. LDW280-52659
EO NO. A6
CONTROL INFO NO. LDW280A5955

IN F/D & B/M FOR -25 ADD LDW 280 P17463-61 BLANKET ASSY
FOR -27 ADD LDW 280 P17463-63 BLANKET ASSY

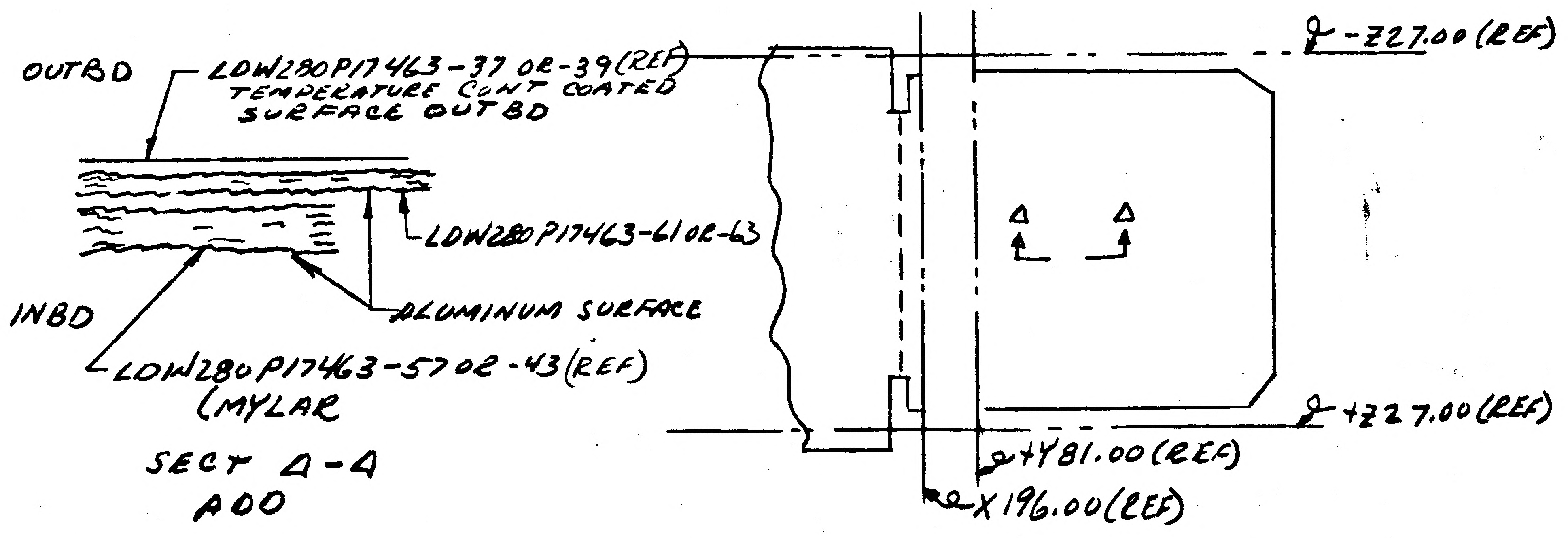
OUTBD
LDW280P17463-37 OR-39(REF) TEMPERATURE CONT COATED SURFACE OUTBD
LDW280P17463-61 OR-63
ALUMINUM SURFACE
INBD
LDW280P17463-57 OR -43(REF) (MYLAR
SECT Δ-Δ ADD
℄ -Z27.00(REF)
℄ +Z27.00(REF)
℄ +Y81.00(REF)
℄ X196.00(REF)
Δ
Δ

* REWORK AS SHOWN Δ NEXT AVAILIBLE LETTER

DETAIL SPEC REQ	☐	CL II ENGRG CHG	✓	CL I ENGRG CHG	☐	LCD 19-1135	5

REASON FOR EO: ADDITIONAL THERMAL PROTECTION (LCR 19-1135)

DESCRIPTION OF EO: IN F/D & B/M ADDED FOR -25 & -27 LDW280 P17463-61 & -63 RESPECTIVELY

Ⓡ GAEC EO RELEASE C: JK 3/23/7

MODEL	EFFECTIVITY: PROCURING ACTIVITY NO.	GAEC UNIT NO.	SUB CONTR UNIT NO.
LM		LM-2(32)	
		THRU	
		LM-15(45)	

DRAWING CHANGE REQD		DISPOSITION OF PARTS		APPROVED BY								
✓		*		DATE	3/16/67	3/21/67		3/16/67	3/20/67		3/21/67	3-23-67
REVISE DWG	RECORD EO	REWORK	SCRAP	5	VD1	SUPPORT	RELIAB. GROUP	GROUP LEADER	STRESS GROUP	LIAISON ENGRG	PROJ ENGRG	

PRIORITY: C
DRAWING TITLE: BLANKET INSTL DESCENT STAGE +Y THERMAL SHIELD
DRAWING NO.: LDW280-52659
EO NO.: A6

ISSUED BY H.PALLMEYER / J.STRAKOSCH SECTION VEH DES INT GROUP NO. 335 PL 25

01
NAS 9-1100

ENG 32.2 REV 3-65

FITH

GRUMMAN AIRCRAFT ENGINEERING CORP.
CODE IDENT NO. 26512
ENGINEERING ORDER

DWG. NO. LDW280-52659		EO NO.	A7
CONTROL INFO NO.	LDW280A7357		

ADD -29 STANDOFF INSTL (SAME AS -7 EXCEPT AS SHOWN) N/A LDW280-52509 EFF LM-2(32) (1 REQD)
ADD -31 BLKT INSTL (SAME AS -9 EXCEPT AS SHOWN) N/A LDW280-52553 EFF LM-2(32) (1 REQD)
IN N/B FOR -7 REMOVE N/A LDW280-52509 EFF LM-2(32)
FOR -9 REMOVE N/A LDW280-52553 EFF LM-2(32)

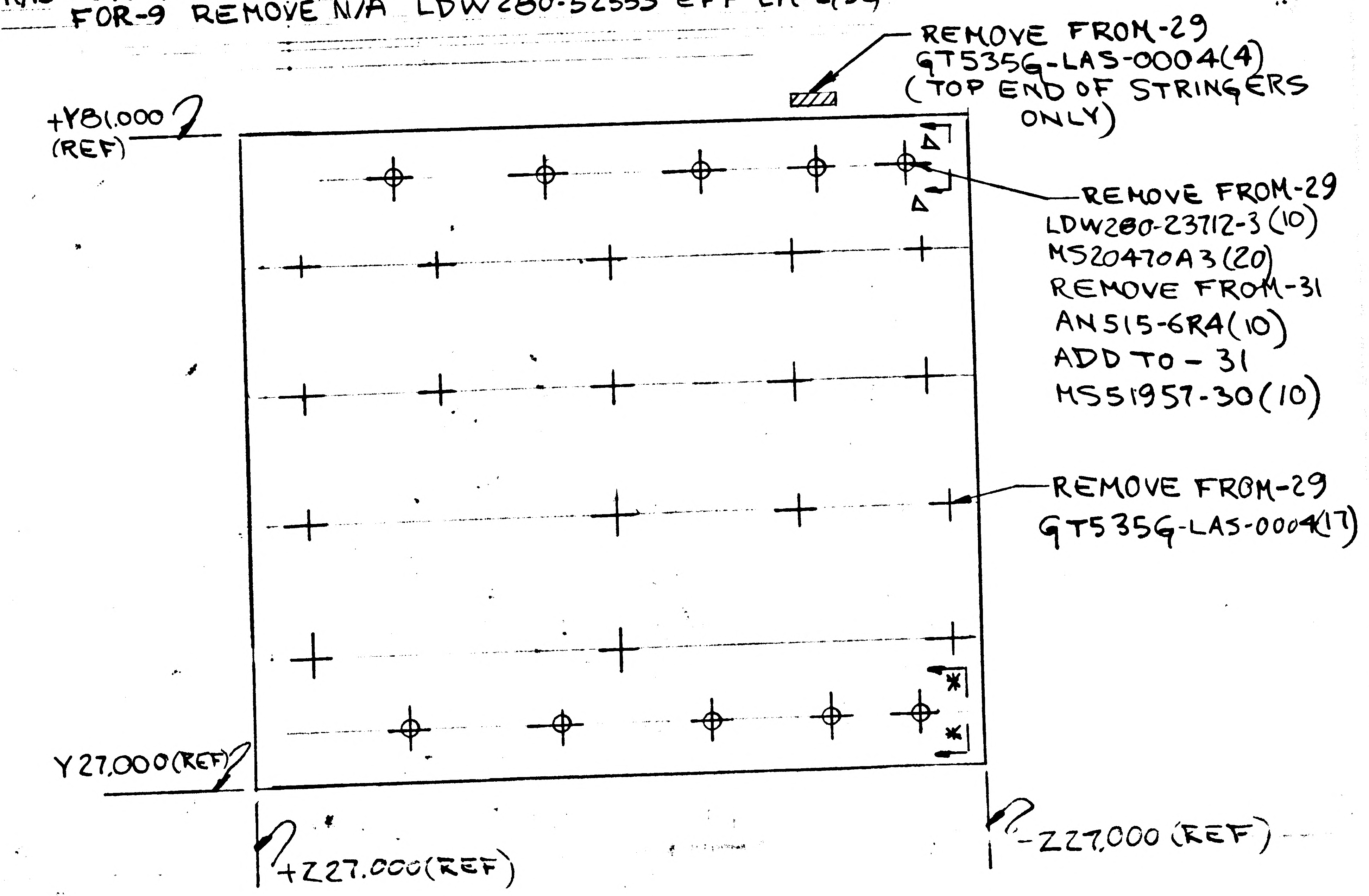
REMOVE FROM -29
GT535G-LAS-0004(4)
(TOP END OF STRINGERS ONLY)
+Y81.000 (REF)
Δ
Δ
REMOVE FROM -29
LDW280-23712-3 (10)
MS20470A3 (20)
REMOVE FROM -31
AN515-6R4 (10)
ADD TO -31
MS51957-30 (10)
REMOVE FROM -29
GT535G-LAS-0004(17)
*
*
Y27.000 (REF)
+Z27.000 (REF)
-Z27.000 (REF)

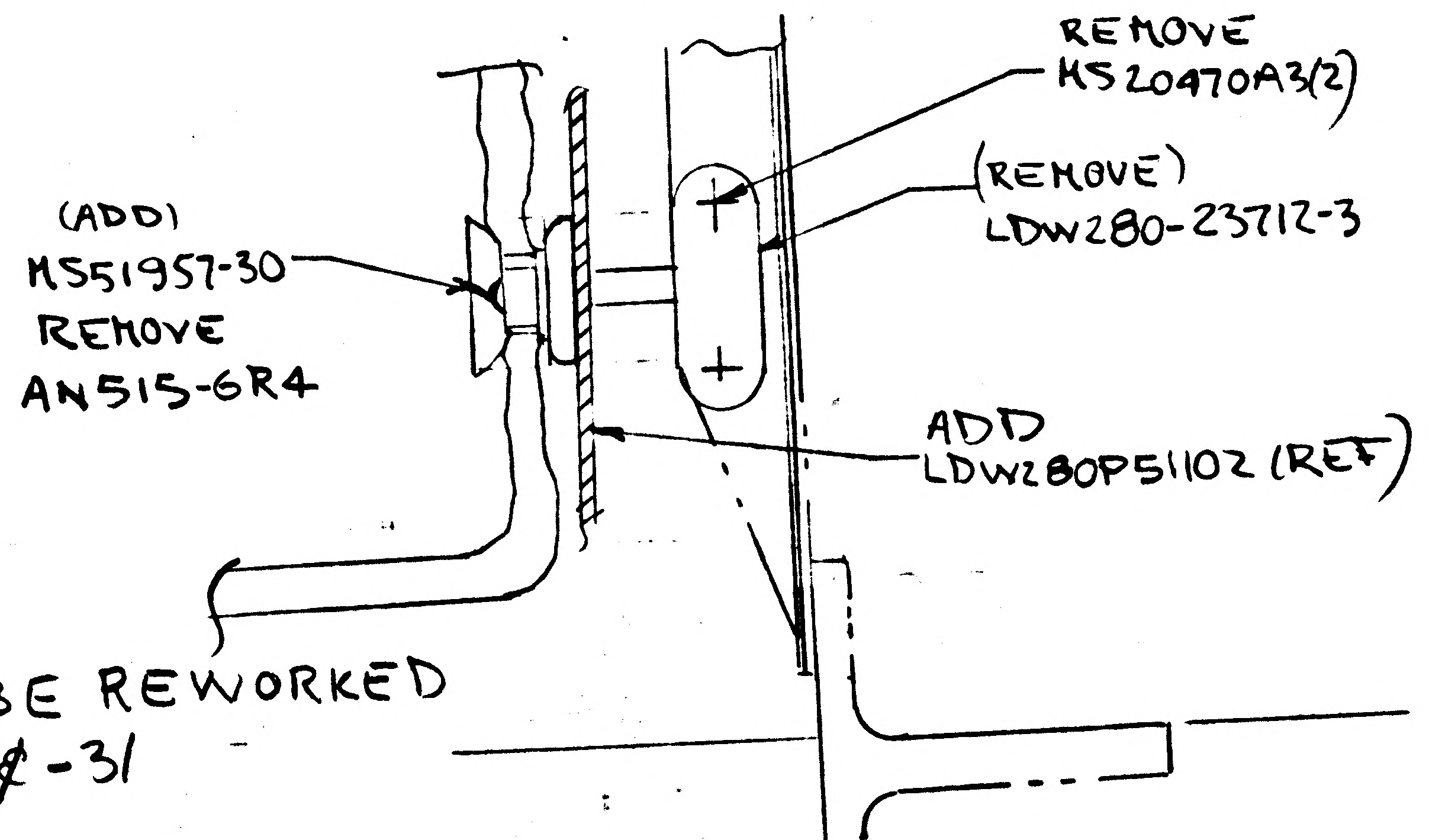
REMOVE
MS20470A3(2)
(REMOVE)
LDW280-23712-3
(ADD)
MS51957-30
REMOVE
AN515-6R4
ADD
LDW280P51102 (REF)

* -7 & -9 MAYBE REWORKED TO -29 & -31

NOTE: (DO NOT INCORPORATE ON DWG) EXTRANEOUS HOLES MAY BE LEFT OPEN.

ADD SECT *-* (SHN) Δ-Δ (OPP) (FOR -29 & -31 ONLY)
(SAME AS SECT A-A EXCEPT AS SHOWN)

LCD-1244

5

DETAIL SPEC REQ	☐	CL II ENGRG CHG	☐	CL I ENGRG CHG	✓	GAEC EO RELEASE Ⓡ
						C
						JK 6/20/7

REASON FOR EO	DESCRIPTION OF EO
TO PROVIDE FOR FITH SHIELD	ADDED -29, -31 SECT *-*, & Δ-Δ FOR -7 & -9 REMOVED LM-2(32) EFF

MODEL	EFFECTIVITY		
	PROCURING ACTIVITY NO.	GAEC UNIT NO.	SUB CONTR UNIT NO.
LM		LM-2(32)	

DRAWING CHANGE REQD		DISPOSITION OF PARTS	
REVISE DWG	RECORD EO	REWORK	SCRAP
✓		✓*	

APPROVED BY		SUPPORT	RELIAB. GROUP	GROUP LEADER	STRESS GROUP	LIAISON ENGRG	PROJ ENGRG	~~GOVT~~
DATE	6/12/67			6/12/67	6/13/67		6/15/67	6/19/67
5	VDI							

PRIORITY	DRAWING TITLE	DRAWING NO.	EO NO.
C	BLKT INSTL DESCENT STAGE +Y THERMAL SHIELD	LDW280-52659	A7

ISSUED BY STEA / STRAKOSCH SECTION VDI GROUP NO. 335 PL 25

01
NAS 9-1100

01 NAS 9-1100

B ENG 32.2 REV 3-65 **FITH**

GRUMMAN AIRCRAFT ENGINEERING CORP.
CODE IDENT NO. 26512
ENGINEERING ORDER *

DWG. NO. LDW280-52659		EO NO.	A8
CONTROL INFO NO. LDW280A7871			

FOR-17, REMOVE 30 FASTENERS AS SHOWN BELOW. (HOLES A,B&C)
FOR-19, ADD SECT.** AS SHOWN BELOW
FOR-17-ADD LM-3 (33) N/A LDW280-53509 1REQ. FOR-19 ADD LM-3 N/A LDW280-53553 1REQ.
REVISED-17,-19 AS SHOWN BELOW
REMOVE -7,-9
IN B/M LDW280P17463-65 REPLACES LDW280P17463-43 ON-23
" " LDW280P17463-69 " LDW280P17463-37 ON-27
" " LDW280P17463-63 REMOVE FROM -27

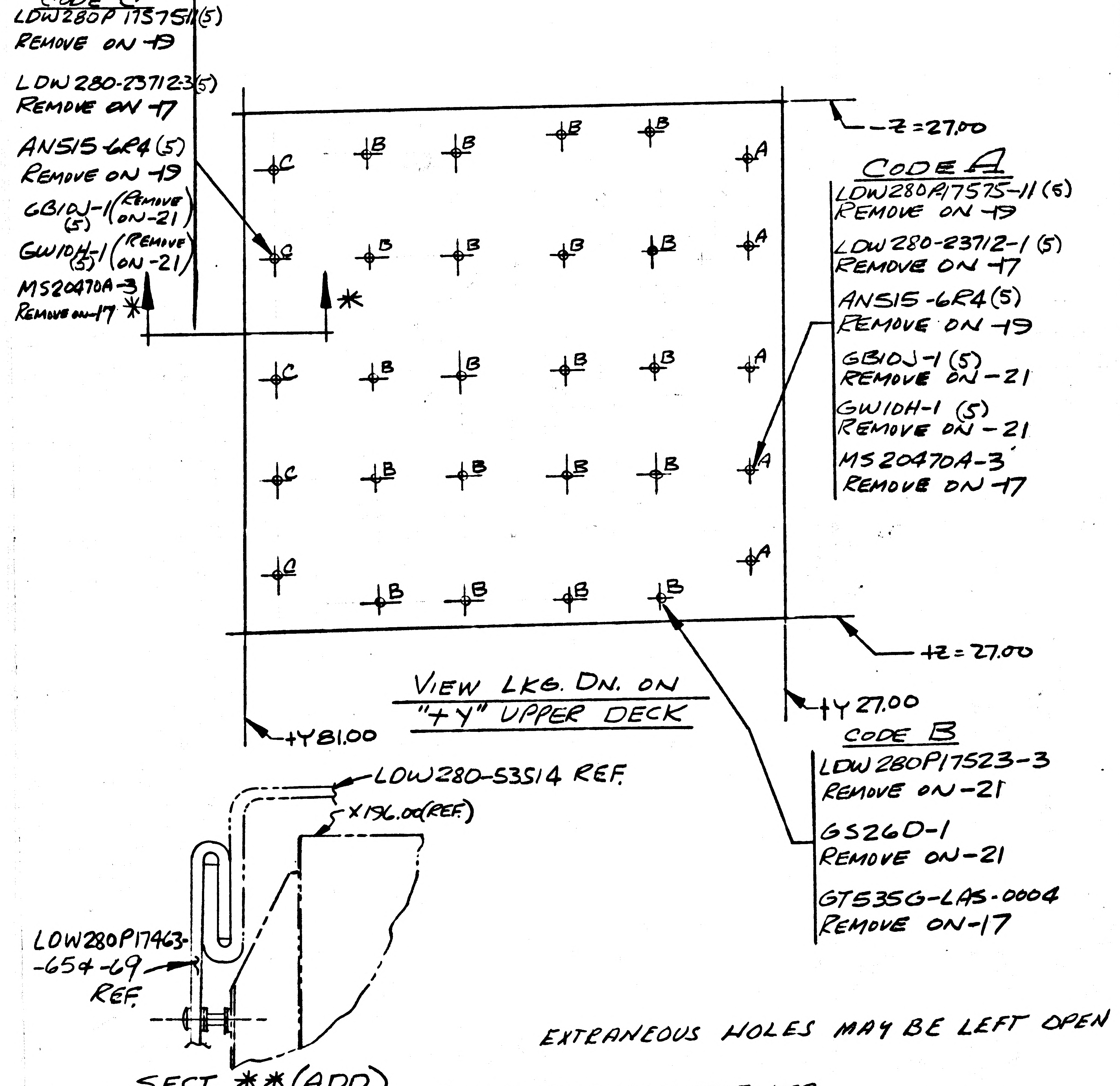
CODE C
LDW280P17575-11(5)
REMOVE ON-19
LDW280-23712-3(5)
REMOVE ON-17
AN515-6R4(5)
REMOVE ON-19
GB10J-1(5) (REMOVE ON-21)
GW10H-1(5) (REMOVE ON-21)
MS20470A-3
REMOVE ON-17 *
-Z=27.00
CODE A
LDW280P17575-11(5)
REMOVE ON-19
LDW280-23712-1(5)
REMOVE ON-17
AN515-6R4(5)
REMOVE ON-19
GB10J-1(5)
REMOVE ON-21
GW10H-1(5)
REMOVE ON-21
MS20470A-3
REMOVE ON-17
A
B
C
*
+Z=27.00
+Y27.00
CODE B
LDW280P17523-3
REMOVE ON-21
GS26D-1
REMOVE ON-21
GT535G-LAS-0004
REMOVE ON-17
VIEW LKG. DN. ON "+Y" UPPER DECK
+Y81.00
LDW280-53514 REF.
X196.00(REF.)
LDW280P17463-65 & -69 REF.

SECT **(ADD)

EXTRANEOUS HOLES MAY BE LEFT OPEN

*USE NEXT AVAILABLE LTR

DETAIL SPEC REQ		CL II ENGRG CHG		CL I ENGRG CHG	✓ LCD-1244						
REASON FOR EO				DESCRIPTION OF EO							GAEC EO RELEASE ® 5 C
PROVISIONS FOR FITH SHIELD				REMOVED EFF FROM-7&-9 ADDED SECT** ADDED LM-3 EFF FOR-17&-19. LDW280P17463-65 WAS -43 LDW280P17463-69 WAS -37. REMOVED LDW280P17463-63 FROM-27 REMOVED FROM-19: LDW280P17575-11(10), AN515-6R4(10) REMOVED FROM-17: LDW280P23712-1&-3(5 ea), GT535G-LAS-0004(20) REMOVED FROM-21: GB10J-1(5) & GW10H-1(5)							JK 7/31/67
MODEL	EFFECTIVITY			DRAWING CHANGE REQD	DISPOSITION OF PARTS		APPROVED BY	JAP	JMS	W/H	WRB
	PROCURING ACTIVITY NO.	GAEC UNIT NO.	SUB CONTR UNIT NO.				DATE	7/28/67	7/28/67	7/29/67	7/28/67
LM	LM-3(33) THRU			✓ REVISE DWG	RECORD EO	-17 -19 ✓ REWORK	SCRAP	7/25/67	VDI	SUPPORT	RELIAB. GROUP	GROUP LEADER	STRESS GROUP	LIAISON ENGRG	PROJ ENGRG	~~GOVT~~
	LM-15(45)			PRIORITY C	DRAWING TITLE BLANKET INSTALL., DESCENT STAGE +Y THERMAL SHIELD				DRAWING NO. LDW280-52659		EO NO. A8

7/28
ISSUED BY J RESER/STRAKOSCH SECTION VDI GROUP NO. 335 PL 25

ENG 32.1 REV 3-65

GRUMMAN AIRCRAFT ENGINEERING CORP.
CODE IDENT NO. 26512

ENGINEERING ORDER

DWG. NO. LDW280-52659	EO NO. A9
CONTROL INFO NO. LDW280A8146	

FOR -31 BLANKET INSTL ADD LDW280P18339-9 BLANKET ASSY
& LDW280P18339-23 TAPE ASSY

LDW280P18339-9 TRIM ON INSTL TO MATCH PLUME IMPINGEMENT SHIELD, BUTT FIT TO 2" MAX CLEARANCE, TRIM AS REQD TO CLEAR PENETRATIONS BY 2" MAX

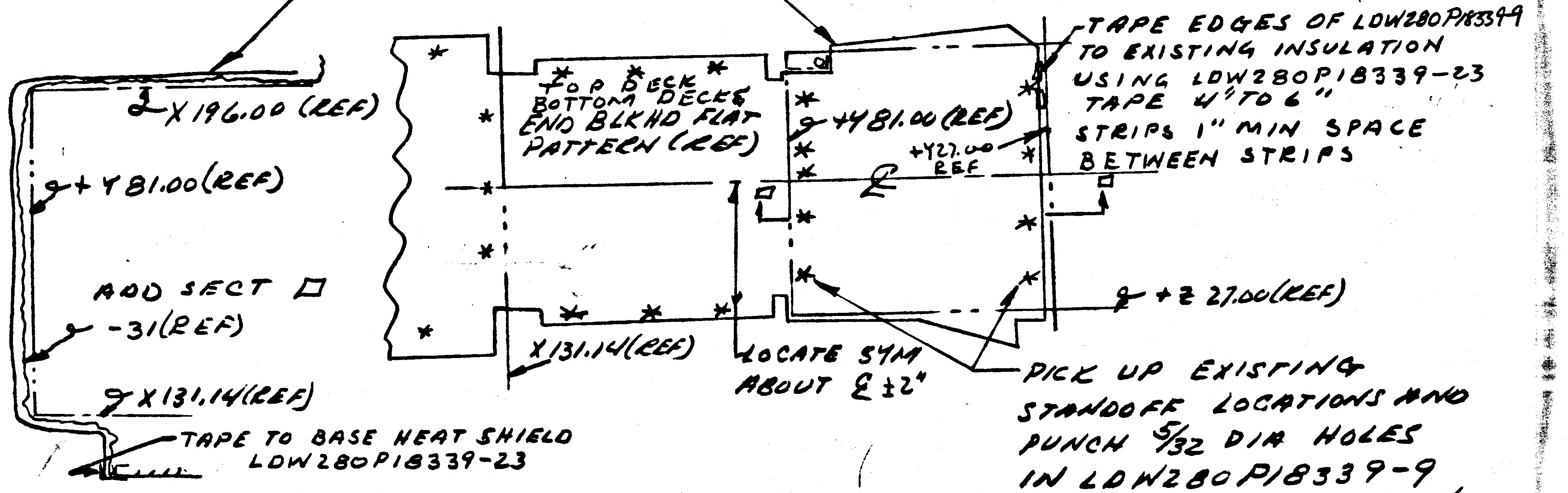

TAPE EDGES OF LDW280P18339-9 TO EXISTING INSULATION USING LDW280P18339-23 TAPE 4" TO 6" STRIPS 1" MIN SPACE BETWEEN STRIPS

LOCATE SYM ABOUT ℄ ±2"

PICK UP EXISTING STANDOFF LOCATIONS AND PUNCH 5/32 DIA HOLES IN LDW280P18339-9 INSTALL WITH EXISTING HDW

TAPE TO BASE HEAT SHIELD LDW280P18339-23

□ = NEXT AVAILIBLE SECT LETTER

DETAIL SPEC REQ		CL II ENGRG CHG		CL I ENGRG CHG	✓	LCD-1847	5

REASON FOR EO	DESCRIPTION OF EO	Ⓡ GAEC EO RELEASE C
ADDITIONAL THERMAL PROTECTION	FOR -31 ADDED LDW280P18339-9 & -23 ADDED SECT □	JK 8/1/7

MODEL	PROCURING ACTIVITY NO.	GAEC UNIT NO.	SUB CONTR UNIT NO.
LM		LM-2 (32)	

EFFECTIVITY

DRAWING CHANGE REQD		DISPOSITION OF PARTS	
✓		-31	
REVISE DWG	RECORD EO	REWORK	SCRAP

APPROVED BY			M.S					
DATE	7/31/67		7/31/67	7/31/67	7/31/67		7/31/67	8-1-67
	VDI	SUPPORT	RELIAB. GROUP	GROUP LEADER	STRESS GROUP	LIAISON ENGRG	PROJ ENGRG	GOVT

PRIORITY	DRAWING TITLE	DRAWING NO.	EO NO.
C	BLANKET INSTL - D.S. - +Y THERMAL SHIELD	LDW280-52659	A9

ISSUED BY H. PALLMEYER / J. STRAKOSCH SECTION VEH DES INT GROUP NO. 335 PL 25

01

NAS 9-1100

ENG 32.1 REV 3-65

GRUMMAN AIRCRAFT ENGINEERING CORP.
CODE IDENT NO. 26512
ENGINEERING ORDER

DWG. NO. LEO 280		EO NO. 817
CONTROL INFO NO. LDW280 80644		

FOR ALL DASH NUMBERS & NEXT ASSYS. IN M/B OF THE FOLLOWING DWGS. REMOVE LM 3 (33) THRU LM 15(45) REQUIREMENTS

ITEM	DWG. NO.	NEXT ASSY*	TITLE	CHANGE NO
1	LDW280P17460	LDW280-52656	SEE DWG.	C2
2	P17461	-51657		B7
3	P17462	-52658		B8
4	P17463	-52659		B8
5	-52656	-53553		C4
6	-52656	-54553		
7	-51657	-53553		B8
8	-51657	-54553		
9	-52658	-53553		B8
10	-52658	-54553		
11	-52659	-53553		B1
12	-52659	-54553	SEE DWG.	

DETAIL SPEC REQ		CL II ENGRG CHG		CL I ENGRG CHG	✓	LCD 2360 (5)

REASON FOR EO	DESCRIPTION OF EO	GAEC EO RELEASE C
REDESIGNED END BULKHDS	REMOVED EFF LM-3 (33) THRU LM-15(45) FROM N/A*	JK 12/16/67

MODEL	EFFECTIVITY		
	PROCURING ACTIVITY NO.	GAEC UNIT NO.	SUB CONTR UNIT NO.
LM		LM 3(33) THRU LM45(15)	

DRAWING CHANGE REQD		DISPOSITION OF PARTS	
✓			✓
REVISE DWG	RECORD EO	REWORK	SCRAP

APPROVED BY								
DATE	12/8/67			12-8-67	[illegible]		12/8/67	12-16-67
P	VDI	SUPPORT	RELIAB. GROUP	GROUP LEADER	STRESS GROUP	LIAISON ENGRG	PROJ ENGRG	~~GOVT~~

PRIORITY	DRAWING TITLE	DRAWING NO.	EO NO.
C	NOTED	LEO280	817

21 DEC 67
ISSUED BY E.V.R. CASE / P. THORJUSEN SECTION VDI GROUP NO. 335 PL 25

01

NAS 9-1100

ENG 32.1 REV 3-65

GRUMMAN AIRCRAFT ENGINEERING CORP.
CODE IDENT NO. 26512
ENGINEERING ORDER

DWG. NO. LEO280
EO NO. 822
CONTROL INFO NO. LDW280B0818

FOR ALL DASH NUMBERS & NEXT ASSYS. IN M/B OF THE FOLLOWING DWGS. REMOVE LM-3 (33) THRU LM-15(45) REQUIREMENTS

	ITEM	DWG NO.	NEXT ASSY.	TITLE	CHANGE NO.
✓	1.	LDW280-52656	LDW280-53509	SEE DWG.	C6
			-54509		
✓	2.	-51657	-53509		B9
			-54509		
✓	3.	-52658	-53509		B9
			-54509		
✓	4.		-53509		B2
		LDW280-52659	LDW280-54509	SEE DWG.	

DETAIL SPEC REQ	☐	CL II ENGRG CHG	☐	CL I ENGRG CHG	☑	LCD 2360

REASON FOR EO: REDESIGNED END BULKHDS

DESCRIPTION OF EO: REMOVED EFF. LM-3(33) THRU LM-15(45) FOR ALL DASH NO'S

GAEC EO RELEASE (5) C: JK 12-26-67

MODEL	EFFECTIVITY: PROCURING ACTIVITY NO.	GAEC UNIT NO.	SUB CONTR UNIT NO.
LM		LM-3 (33) THRU LM-15 (45)	

DRAWING CHANGE REQD: REVISE DWG ✓ RECORD EO
DISPOSITION OF PARTS: REWORK SCRAP ✓

APPROVED BY	JMS			P. THORLUSEN	VJH		JP	B.H.
DATE	12/18/67			12-18-67	12/20/67		12/18/67	12-26-67
P	V.D.I.	SUPPORT	RELIAB. GROUP	GROUP LEADER	STRESS GROUP	LIAISON ENGRG	PROJ ENGRG	GOVT

PRIORITY: C
DRAWING TITLE: NOTED
DRAWING NO.: LEO280
EO NO.: 822

21 DEC 67
ISSUED BY E.V.R.CASE / H. PALUMEYER / P. THORLUSEN X1133 SECTION V.D.I. GROUP NO. 335 PL 35

01 NAS 9-1100

LDW280-52660 A

MODEL OR END ITEM	NEXT ASSY	MODULE OR SER NO.	REQD PER MODULE OR END ITEM
LEM	LDW280-56509	LEM 6(36)	1
	-55509	LEM 5(35)	1
	-54509	LEM 4(34)	1
	-53509	LEM 3(33)	1
LEM	LDW280-52509	LEM 2(32)	1

PART NO.	GAEC SCH NO.
LDW280-52660-1	50-3

MODEL OR END ITEM	NEXT ASSY	MODULE OR SER NO.	REQD PER MODULE OR END ITEM
PART NO.		GAEC SCH NO.	

MODEL OR END ITEM	NEXT ASSY	MODULE OR SER NO.	REQD PER MODULE OR END ITEM
PART NO.		GAEC SCH NO.	

SH REV STATUS: FOR DESCRIPTION OF REV SEE SUBQ SH

SHEET	1.00	1.10	2.00	3.00					
REV	A	A	A	A					
SHEET									
REV									
SHEET									
REV									

LAST SECT LTR USED	C
LAST DASH NO. USED	-1

GRUMMAN REL INFO

PRIM NO.			
207	VE(001)	MP-A	7-1-6X

UNLESS OTHERWISE SPECIFIED DIMENSIONS ARE IN INCHES.
TOLERANCE UNLESS SPECIFIED
FRACTIONS - DECIMALS – ANGLES
±1/16 ±.010 ±1/2°

ORIG DWG AUTH	
DETAIL SPEC REQUIREMENT	
CLASS II ENGRG CHANGE	
CLASS I ENGRG CHANGE	

CONTRACT NO. NAS 9-1100 | LINE ITEM 1 | DOCUMENTATION TYPE II

DRAWN BY	L. Michael Grieco 5-31-66	RELIABILITY	
LAYOUT BY	GRIECO 5-31	THERMO	8/2/66
CHECKED BY			
GR LDR	5/31/66		
VDI	6/1		
STRUCT	6/1	PROJ ENGR	9 Jun 66
STRUCT	Alderman 6/1	REL GROUP	7-14-66
WTS	6/6		

GRUMMAN AIRCRAFT ENGRG CORP
BETHPAGE, L. I., NEW YORK

STANDOFF INSTALLATION
DESCENT STAGE-THERMAL
SHIELD - LOWER QUAD

SIZE	CODE IDENT NO.		
B	26512	LDW280-52660	A
SCALE	NONE	SHEET	1.00 OF 4

ENG 77.1 12-65

01

NAS 9-1100

REVISIONS

CHANGE LTR	ITEM NO.	SHEET NO.	ZONE	GRUMMAN INFO ONLY	DET SPEC	CLASS I	CLASS II	ENGRG ORDER	DESCRIPTION	EFFECTIVITY	DISPOSITION OF EXISTING PARTS		CHANGED BY AND DATE	ENGRG APPD	~~GOVT~~ APPD
											REWORK	SCRAP			
A	1	1.00	B/M				✓		N/A CHANGE: LDW280-53509-LEM3(33) WAS LDW280-52509 LEM 3 (33)	LEM3(33)	NOT	REQ'D	L.M. Grieco 6-9-66		6/13 7-14-66
									ON-1 LDW280-54509-LEM4(34) WAS LDW280-52509 LEM 4(34)	LEM4(34)					
									LDW280-55509-LEM5(35) WAS LDW280-52509 LEM 5 (35)	LEM5(35)					
								Ⓡ	LDW 280-56509-LEM6(36) WAS LDW280-52509 LEM6(36) JG	LEM 6(36					Ⓡ

FOR CONTINUATION OF REVISIONS SEE SHEET ______

GRUMMAN AIRCRAFT ENGRG CORP, BETHPAGE, L. I., NEW YORK			
SIZE B	CODE IDENT NO. 26512	LDW280-52660	A
SCALE NONE			SHEET 1.10

ENG 77.3 5-66

01

NAS 9-1100

QTY PER ASSEMBLY							CODE IDENT	PART NO.	I&T	NOMENCLATURE OR DESCRIPTION	MATERIAL	GOVT SPEC	COML SPEC	STOCK SIZE	PROCESS SYM	FINISH NO.	ZONE
								MS20470B3	E	RIVET	STD PART						
						12		LDW280-23713-3	E	STANDOFF ASSY	(SEE DWG)						
						8		LDW280-23712-1	E	STANDOFF ASSY	(SEE DWG)						
								LDW280-52660-1	E	STANDOFF INSTL							
						-1											

SYM OR NO.	PROCESS OR FINISH	GRUMMAN SPEC OR MILITARY SPEC	SYM OR NO.	PROCESS OR FINISH	GRUMMAN SPEC OR MILITARY SPEC	SYM OR NO.	PROCESS OR FINISH	GRUMMAN SPEC OR MILITARY SPEC

I & T: IDENTIFICATION AND TRACEABILITY IN ACCORDANCE WITH : NONE

GRUMMAN AIRCRAFT ENGRG CORP, BETHPAGE, L. I., NEW YORK

SIZE	CODE IDENT NO.		
B	26512	LDW280-52660	A
SCALE NONE		SHEET 2.00	

ENG 77.2 7-65

01

NAS 9-1100

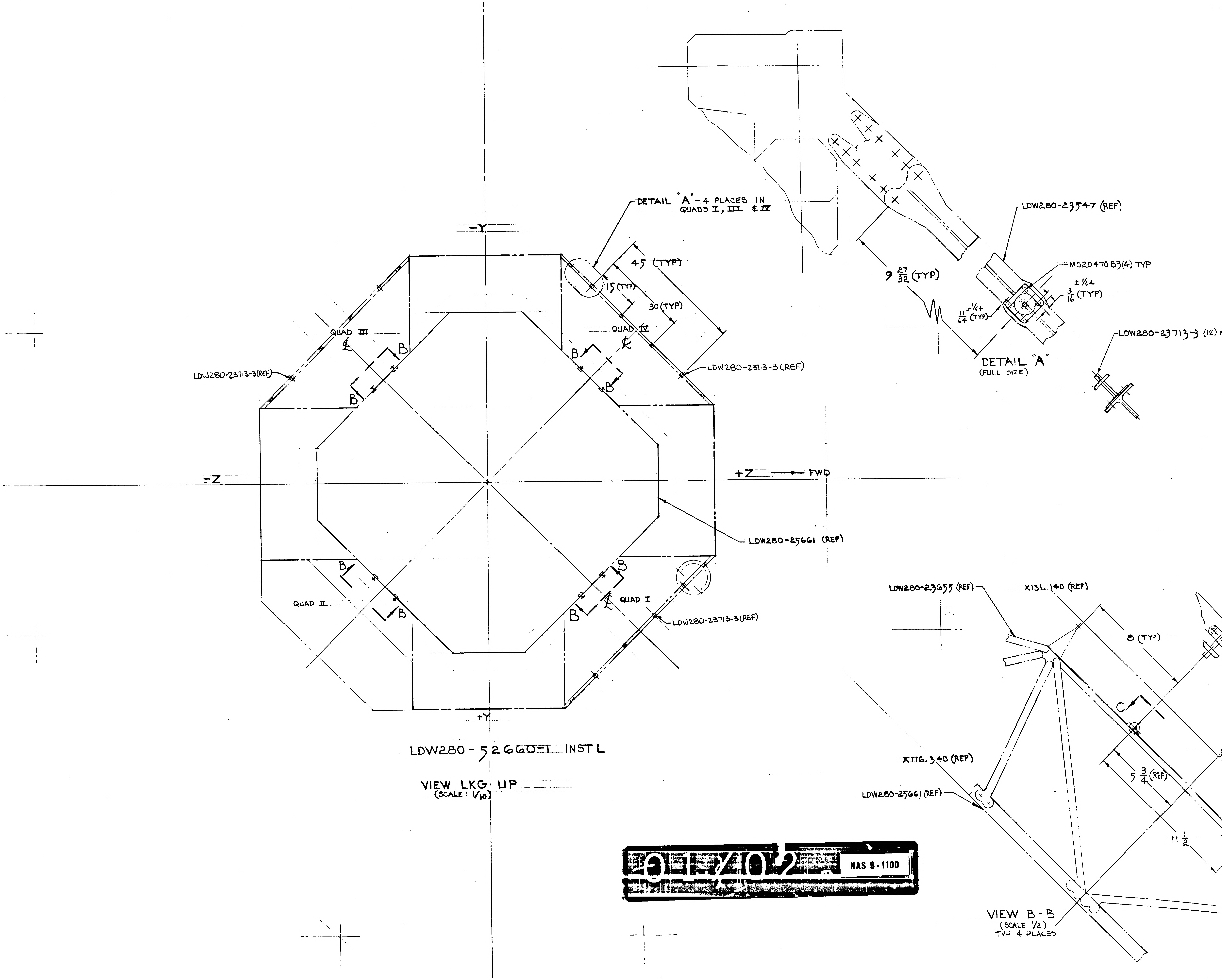
-Y
+Y
-Z
+Z → FWD
QUAD III
QUAD IV
QUAD I
QUAD II
B
DETAIL "A" - 4 PLACES IN QUADS I, III & IV
45 (TYP)
15 (TYP)
30 (TYP)
LDW280-23713-3 (REF)
LDW280-23713-3 (REF)
LDW280-23713-3 (REF)
LDW280-25661 (REF)
LDW280-23547 (REF)
MS20470 B3(4) TYP
±1/64
3/16 (TYP)
11/64 ±1/64 (TYP)
9 27/32 (TYP)
LDW280-23713-3 (12)
LDW280-23655 (REF)
X131.140 (REF)
8 (TYP)
C
5 3/4 (REF)
11 1/2
X116.340 (REF)
LDW280-25661 (REF)

LDW280-52660-1 INSTL

VIEW LKG UP
(SCALE: 1/10)

DETAIL "A"
(FULL SIZE)

VIEW B-B
(SCALE 1/2)
TYP 4 PLACES

01X02 NAS 9-1100

3/2

NOTES

1. INSTALL FASTENERS PER LSP 14-15302.

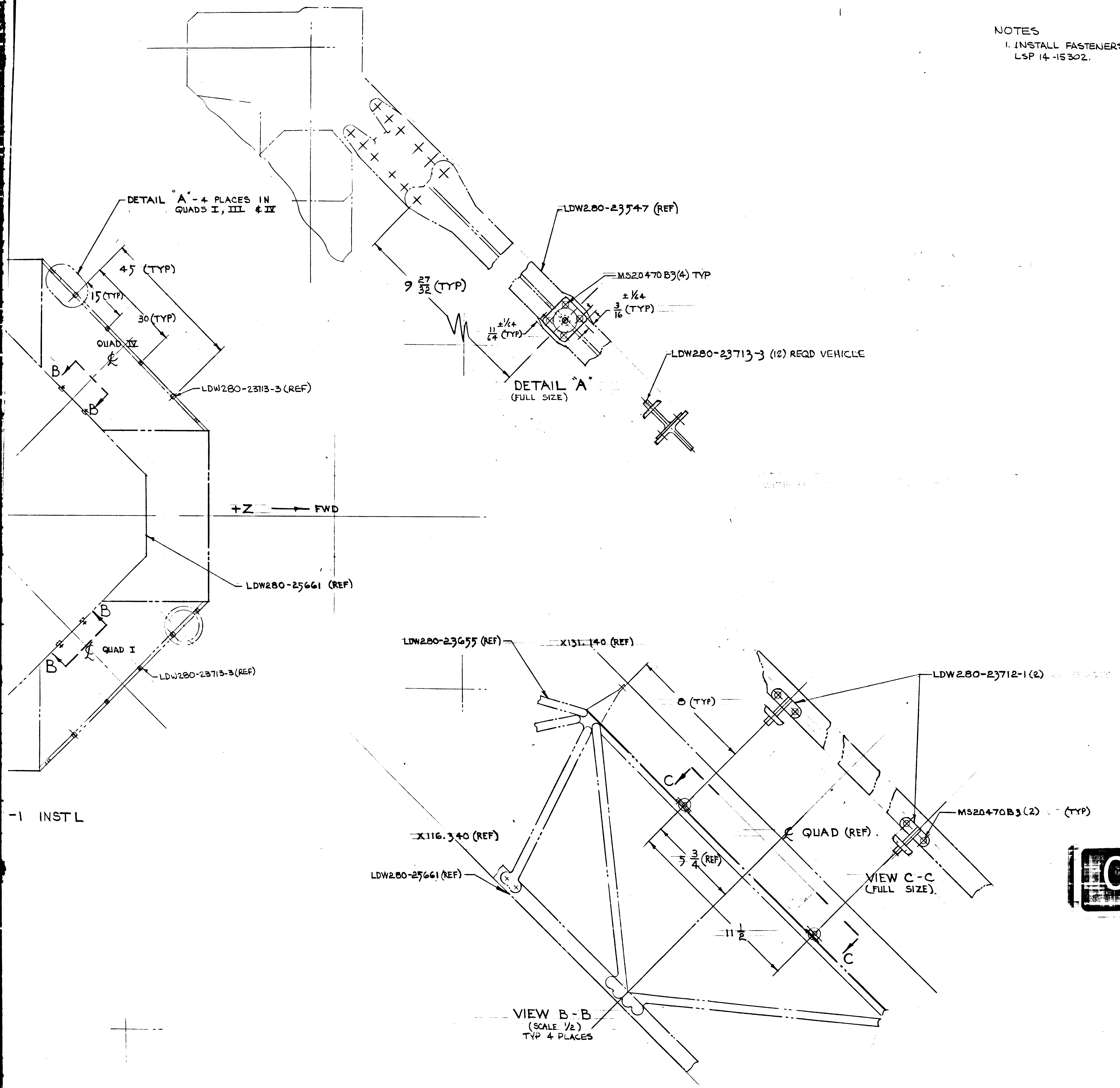
DETAIL "A" - 4 PLACES IN QUADS I, III & IV
45 (TYP)
15 (TYP)
30 (TYP)
QUAD IV
B
B
LDW280-23113-3 (REF)
LDW280-23547 (REF)
MS20470B3(4) TYP
±1/64
3/16 (TYP)
9 27/32 (TYP)
11/64 ±1/64 (TYP)
DETAIL "A"
(FULL SIZE)
LDW280-23713-3 (12) REQD VEHICLE
+Z → FWD
LDW280-25661 (REF)
B
B
QUAD I
LDW280-23713-3 (REF)
-1 INSTL
LDW280-23655 (REF)
X131.140 (REF)
LDW280-23712-1 (2)
8 (TYP)
C
C
QUAD (REF)
MS20470B3 (2) (TYP)
X116.340 (REF)
LDW280-25661 (REF)
5 3/4 (REF)
11 1/2
VIEW C-C
(FULL SIZE)
VIEW B-B
(SCALE 1/2)
TYP 4 PLACES

02/02 NAS 9-1100

LAYOUT RELEASE TO BE REDRAWN ON PROD FORMAT

MANUFACTURING OPERATIONS UNLESS OTHERWISE SPECIFIED NOTES CHECKED √ APPLY TO THIS DWG.	
PART NUMBER AND ALL OTHER MARKINGS IN REGION MARKED ⊠ USE BOTH SIDES IF NECESSARY.	
FILLET AND INSIDE CORNER RADII TOLERANCES .016R TO .062R ± .010 .063R TO .250R ± .015 OVER .250R ± .030	
DEPTH SHOWN FOR TAPPED HOLES IS FULL THDS. 2-3 IMP THDS. BEYOND PERMISSIBLE.	
EXTERNAL THREAD LENGTH SHOWN INCLUDES 2 IMPERFECT THREADS MAX.	
DO NOT CADMIUM PLATE & PAINT HOLES OR SURFACES MARKED WITH DOUBLE ASTERISK.	
MISMATCH STEP OF ± .005 PERMISSIBLE DUE TO CHANGE OF CUTTERS AT INSIDE INTERSECTING SURFACES.	
DIAMETERS MARKED MUST BE CONCENTRIC WITHIN FULL INDICATOR READING	
HOLES MUST BE KEPT FREE OF CHROME PLATING SOLUTION.	
ALL DIMENSIONS SHOWN TO BE MET AFTER CADMIUM PLATING. THICKNESS OF PLATE .0003 MIN. TO .0005 MAX. MIN. THICKNESS TO BE .0002 ON THREADED AREAS. NO ALLOWANCE FOR PLATING IN HOLES	
125 √ SURFACE ROUGHNESS INCLUDING REAMED HOLES PER MIL-STD-10	
200 √ FOR ALL DRILLED HOLES	
REMOVE ALL BURRS. BREAK ALL EDGES .015-.031	
INSPECTION INFORMATION MINIMUM PERMISSIBLE AVERAGE EDGE DISTANCE MARKED IS	
SYMBOL √ DENOTES SURFACE TO BE MACHINED	
UNLESS OTHERWISE SPECIFIED TOLERANCE ON FLANGES IS ± 1/32	
LENGTHS OF AN, NAS & MS AL ALY RIVETS SHORTER THAN 1 INCH ARE NOT SPECIFIED.	
TOLERANCE ON LOFTED DELINEATIONS IS	

DWG SIZE 34 X

PRINTING INFO ONLY

FULL SIZE SHEET AREA (36 X)= SQ. FT.

1/2 SIZE SHEET AREA (1/4 OF FULL)= SQ. FT.

PRINT TRIM LINE

LDW280-52660 A

LDW280-52660 A

	GRUMMAN AIRCRAFT ENGRG CORP., BETHPAGE, L. I., NEW YORK			
LEM	SIZE J	CODE IDENT NO. 26512	LDW280-52660	A
MODEL OR END ITEM	SCALE NOTED		SHEET 3.00	

ENG 32.1 REV 3-66

GRUMMAN AIRCRAFT ENGINEERING CORP.
CODE IDENT NO. 26512
ENGINEERING ORDER

DWG. NO. LDW280-52660
EO NO. B1
CONTROL INFO NO. LDW280A1064

IN FIELD OF DRAWING ON -1 ADD VIEW D-D & REVISE VIEW C-C

VIEW D-D IS FOR QUAD III ONLY AND IS IDENTICAL TO VIEW B-B EXCEPT AS NOTED.

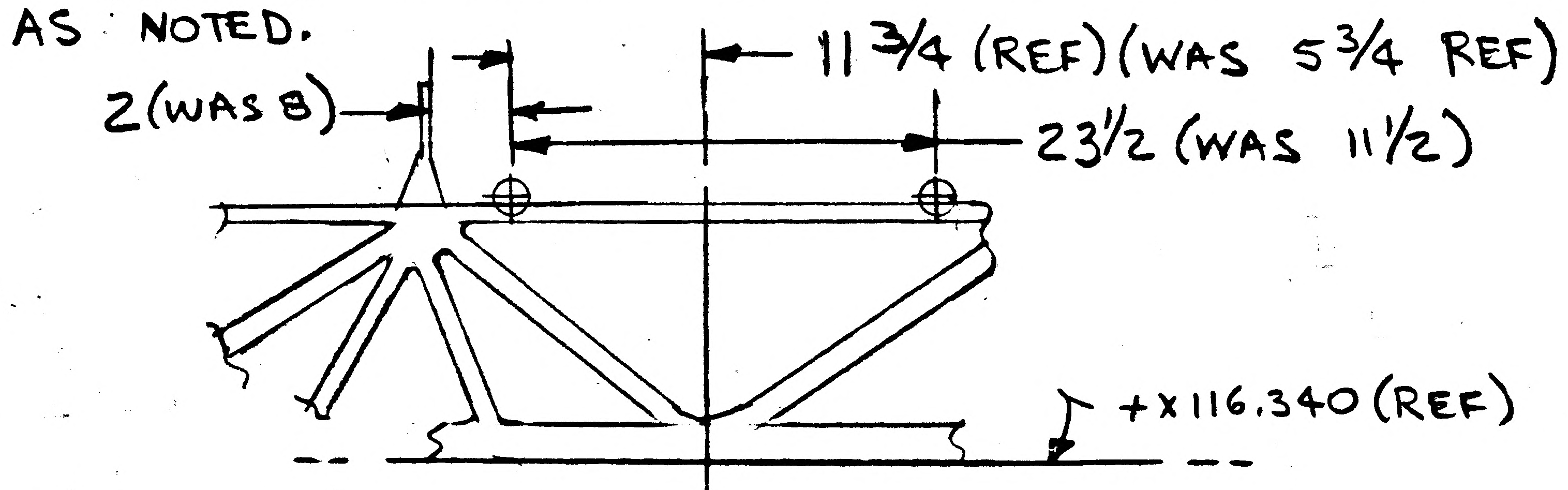

VIEW D-D
(QUAD III ONLY)

VIEW C-C
MS20470A3 WAS MS20470B3

DETAIL SPEC REQ		CL II ENGRG CHG		CL I ENGRG CHG	

REASON FOR EO: REDESIGN OF THERMAL DOOR FOR FUEL FILL & DRAIN ACCESS

DESCRIPTION OF EO: ADDED VIEW D-D FOR -1 INSTL IN VIEW B-B MS20470A3 WAS MS20470B3

GAEC & EO RELEASE: 10.8

MODEL	PROCURING ACTIVITY NO.	GAEC UNIT NO.	SUB CONTR UNIT NO.
LM		LM2(32) LM3(33)	
LM		LM4(34) LM5(35)	
LM		LM6(36)	

DRAWING CHANGE REQD: REVISE DWG	RECORD EO	DISPOSITION OF PARTS: REWORK	SCRAP
✓		✓	

APPROVED BY			RELIAB. GROUP	GROUP LEADER	STRESS GROUP	LIAISON ENGRG	PROJ ENGRG
DATE	10/6/66	10-7-66			10/1/66		10.8.66
	VDI						

PRIORITY: C
DRAWING TITLE: STANDOFF INSTL - DESCENT STAGE THERMAL SHIELD - QUADS LOWER
DRAWING NO.: LDW280-52660
EO NO.: B1

ISSUED BY F. MARZELLA J. STRAKOSCH 10-5-66 1153 SECTION VEHICLE DES. & INT. GROUP NO. 335 PL 35

01

NAS 9-1100

01

NAS 9-110J

ENG 32.2 REV 3-65

GRUMMAN AIRCRAFT ENGINEERING CORP.
CODE IDENT NO. 26512
ENGINEERING ORDER

DWG. NO. LDW280-52660 | EO NO. B2
CONTROL INFO NO. LDW280B1062

ON -1 INSTL: DELETE LM-3(33) THRU LM-6(36) EFF, [WAS EFF: LM-2 THRU LM-6]. CREATE -3 INSTL IDENTICAL TO -1 INSTL EXCEPT AS SHN, GS26F-1-1(12) WAS LDW280-23713-3(12) ON-1 & GS26F-2-1(8) WAS LDW280-23712-1(8) ON-1, I&T=E, ADD NOTE #**: THE FOLLOWING PARTS MAY BE USED FOR FUTURE REPLACEMENTS: GS26F-1-1 MAY BE USED TO REPLACE LDW280-23713-3; GS26F-2-1 MAY BE USED TO REPLACE LDW280-23712-1. (ON EXISTING INSTL'S TWO OPEN HOLES AT EACH GS26F-2-1 STANDOFF ARE PERMISSIBLE IN LDW280-23547 TEES.)

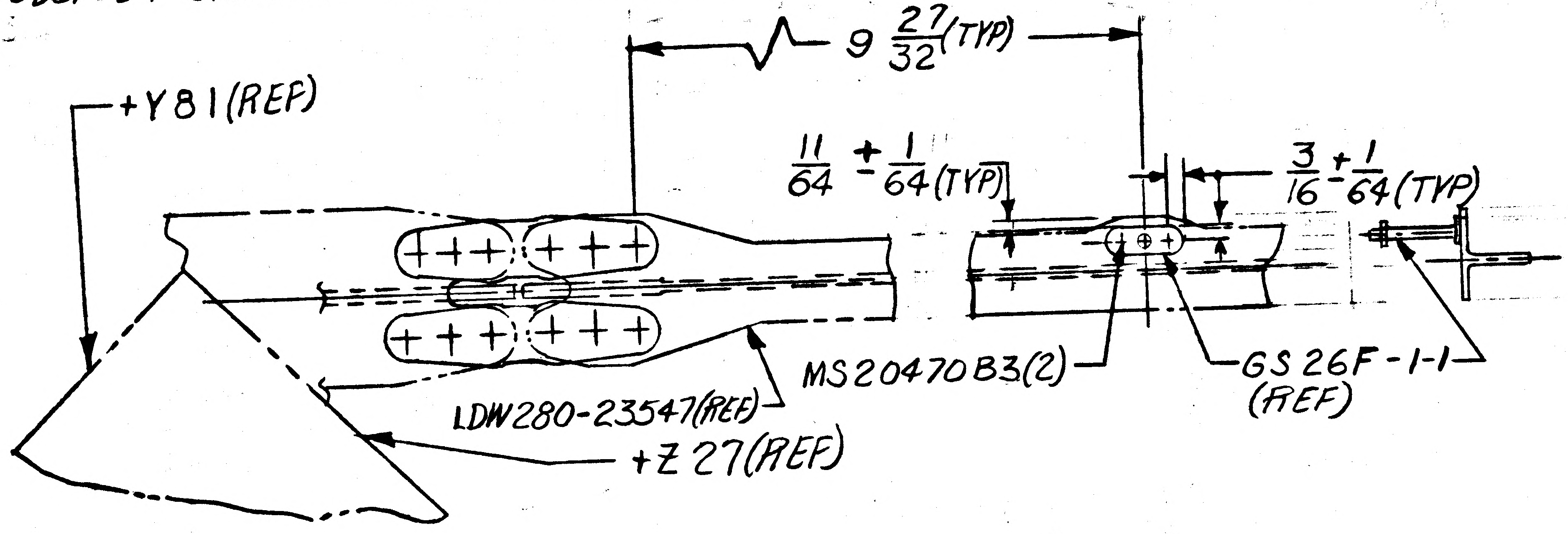
9 27/32 (TYP)
+Y81 (REF)
11/64 ± 1/64 (TYP)
3/16 ± 1/64 (TYP)
MS20470B3(2)
GS26F-1-1 (REF)
LDW280-23547(REF)
+Z27(REF)

ADD: DETAIL * (IDENTICAL TO DETAIL "A" EXCEPT AS SHN)
ON-3 INSTL ONLY

-3 INSTL IS EFF ON LM-3(33), (1 REQ'D/MOD) ON N/A LDW280-53509.
ADD NOTE #** IN F/D TO ALL STANDOFF CALLOUTS.

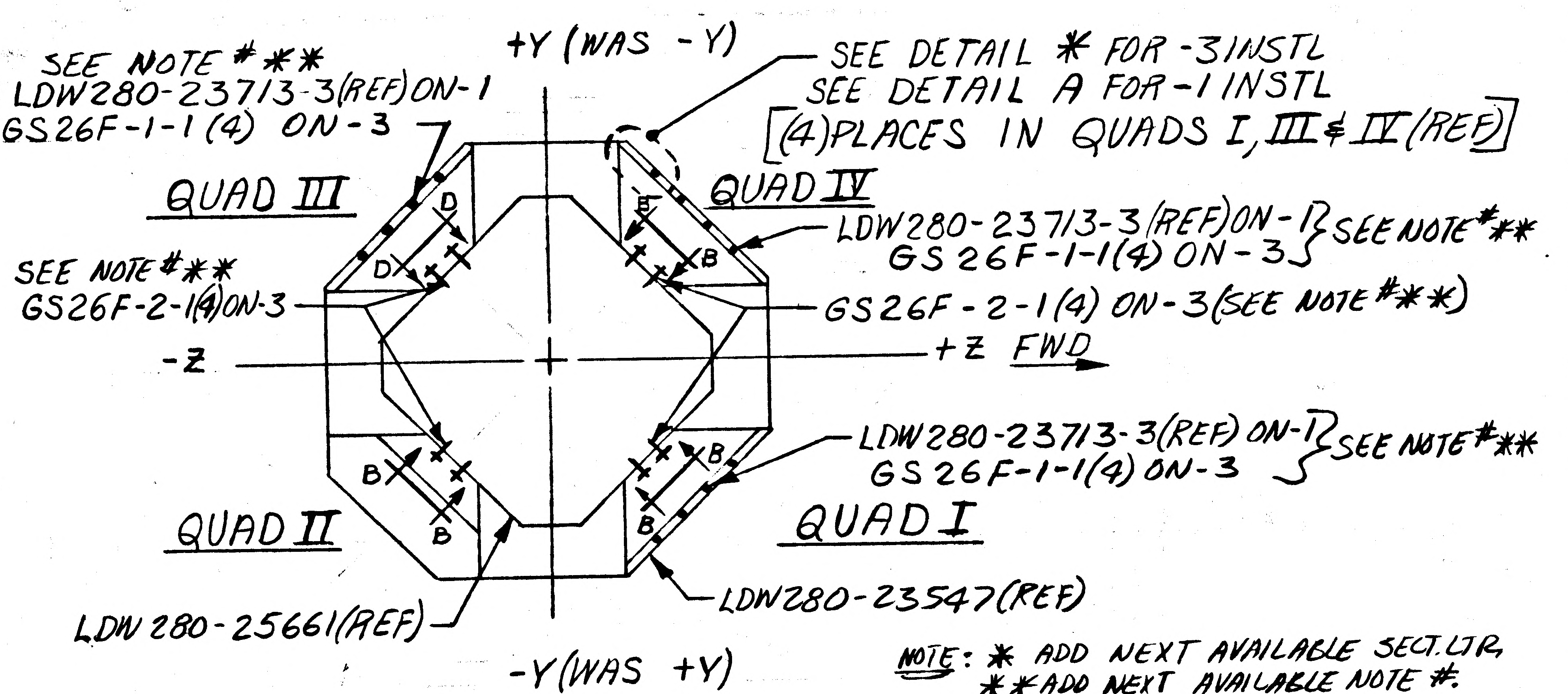
+Y (WAS -Y)
SEE NOTE #**
LDW280-23713-3(REF) ON-1
GS26F-1-1 (4) ON-3
SEE DETAIL * FOR -3 INSTL
SEE DETAIL A FOR -1 INSTL
[(4) PLACES IN QUADS I, III & IV (REF)]
QUAD III
QUAD IV
LDW280-23713-3(REF) ON-1
GS26F-1-1(4) ON-3
SEE NOTE #**
SEE NOTE #**
GS26F-2-1(4) ON-3
GS26F-2-1(4) ON-3 (SEE NOTE #**)
-Z
+Z FWD
LDW280-23713-3(REF) ON-1
GS26F-1-1(4) ON-3
SEE NOTE #**
D
D
B
B
B
B
B
B
QUAD II
QUAD I
LDW280-25661(REF)
LDW280-23547(REF)
-Y (WAS +Y)

NOTE: * ADD NEXT AVAILABLE SECT. LTR.
** ADD NEXT AVAILABLE NOTE #.
(-1 MAY BE REWORKED INTO -3)

VIEW LOOKING UP: (REVISE AS SHN)

LDW280-52660-1 INSTL (REF)
LDW280-52660-3 INSTL.

(5)
PKGS 12

DETAIL SPEC REQ		CL II ENGRG CHG		CL I ENGRG CHG	V	LCD 2360						
REASON FOR EO: REVISED THERMAL REQ'MENTS. FOR PLUME IMPINGEMENT PROTECTION				DESCRIPTION OF EO: ON-1 INSTL REMOVED LM-3 THRU LM-6 EFF; ADDED -3 INSTL. ADDED NOTE #** & DETAIL *. IN VIEW LKG UP +Y WAS -Y & -Y WAS +Y.								Ⓡ GAEC EO RELEASE: JK 1/13/68
MODEL	EFFECTIVITY: PROCURING ACTIVITY NO.	GAEC UNIT NO.	SUB CONTR UNIT NO.	DRAWING CHANGE REQD	DISPOSITION OF PARTS	APPROVED BY	JaP			RJ	WJH	JaP	Botts
						DATE	1/6/68			1-5-68	1/8/68	1/6/68	1-9-68
LM		LM-3(33)		REVISE DWG ✓	REWORK ✓	P	VDI	SUPPORT	RELIAB. GROUP	GROUP LEADER	STRESS GROUP	LIAISON ENGRG	PROJ ENGRG
		THRU		RECORD EO	SCRAP								
		LM-6(36)		PRIORITY: C	DRAWING TITLE: STANDOFF INSTL ~ DESCENT STAGE ~ THERMAL SHLD ~ LWR QUAD					DRAWING NO.: LDW280-52660			EO NO.: B2

1/13/68
ISSUED BY J.J. ROGERS/P. THORJUSEN X1392 SECTION VEH. DES. & INT. GROUP NO. 335 PL 25

REVISIONS FOR CONTINUATION OF REVISIONS SEE SHEET 1.11

CHANGE LTR	ITEM NO.	SHEET NO.	ZONE	GRUMMAN INFO ONLY	DET SPEC	CLASS I	CLASS II	ENGRG ORDER	DESCRIPTION	EFFECTIVITY	DISPOSITION OF EXISTING PARTS REWORK	SCRAP	CHANGED BY AND DATE	ENGRG APPD	APPD
A	1	1.00 1.10 2.00 2.01 2.02 3.00						EO A1	E.O. A1, INITIAL DRAWING RELEASE, PARTS MADE PER E.O	LM-2 THRU LM-6	NOT	REQD	P. Colaiacomo 1-18-67		
	2		8,9 10&11 B,8A					EO A2	ON-1 LDW 280-17539-21,-23,-24,-25 &-26 REPLACED LDW 280-17539-11,-15,-16,-17,-18		✓				
	3		3A 8C 7C 2B					EO A3	IN B/M & FLD LDW 280-17526-11,-13,-15-17,-19 SHOULD BE (ON-9) WAS (ON-1) LDW 280-17539-13,-14 SHOULD BE (ON-5) WAS (ON-1) LDW 280-17539-23,-24 SHOULD BE (ON-7) WAS (ON-1) LDW 280-17539-25,-26, SHOULD BE (ON-9) WAS (ON-1) LDW 280-17540-19,-21,-17 SHOULD BE (ON-9) WAS (ON-3). IN B/M & FLD LDW 280-M17515-1,-2 SHOULD BE (ON-9) WAS (ON-1) LDW 280-M17517-1,-3 SHOULD BE (ON-9) WAS (ON-1) LDW 280-M17550-3,-4 SHOULD BE (ON-9) WAS (ON-1). LDW 280-M17552-1,-2 SHOULD BE (ON-5) WAS (ON-1) LDW 280-M17553-1,-2 SHOULD BE (ON-5) WAS (ON-1) LDW 280 17481-11 SHOULD BE (ON-1) WAS (ON-3) LDW 280-23667-13, 15, 17 SHOULD BE (ON-1) WAS (ON-3)		NOT	REQD			
	4		9,10 C					EO A4	ADDED LDW 280P 18133-11 (3) ON-1		✓				
	5	1.10							REF EO A4 EFFECTIVITY LM-2 (32) THRU LM-15(45) SHOULD BE LM-2 (32) THRU LM-6(36)		NOT	REQD			
	6								REF EO A3 LDW 280-23663-13, -15 -17 SHOULD BE LDW280-52663-13,-15,-17						
	7	1.10 3.00	6B 12A						ON-1 SECT F-F MS 20615-3M3 (12) WAS SPOTWELD (12) ADDED 3/8 & 3/16 (TYP) DIMS ON-1 SECT J-J MS20615-3M3 (11) WAS SPOTWELD (11) ADDED 3/8 & 3/16 (TYP) DIM						
	8	1.00						®	REF E.O.A1, LDW280-25662 WAS LDW280-52662				WINK 3-17-67		
B	1	1.00,1.10						EO B1	IN MOD BLK FOR-1, ADDED LM-7(37) THRU LM-15(45)	LM-7 THRU LM-15	NOT	REQD	L.DIXON 10-23-67		
	2	1.00,2.00,2.01 2.02&3.00	8B 10A 9A					EO B2	ADDED (-1-1) REPLACING -1. ADDED SECTIONS AH-AH & AG-AG (-1-1 MAY BE MADE FROM -1) PAC	LM-3 THRU LM-15	NOT	ED			

CHG APPROVED

LTR	GROUP LDR	VEH DES INT	STRUCT	STRUCT	WEIGHTS	RELIAB
A		[illegible] 3/13/67	wjt 3/14/67			
C						

GRUMMAN AIRCRAFT ENGRG CORP., BETHPAGE, L. I., NEW YORK

SIZE	CODE IDENT NO.		
B	26512	LDW280-52663	C Ⓔ
SCALE NONE			SHEET 1.10

ENG 77.16 3-66

01

NAS 9-1100

REVISIONS FOR CONTINUATION OF REVISIONS SEE SHEET 1.12

CHANGE LTR	ITEM NO.	SHEET NO.	ZONE	GRUMMAN INFO ONLY	DET SPEC	CLASS I	CLASS II	ENGRG ORDER	DESCRIPTION	EFFECTIVITY	DISPOSITION OF EXISTING PARTS REWORK	DISPOSITION OF EXISTING PARTS SCRAP	CHANGED BY AND DATE	ENGRG APPD	GOVT APPD
B	3	1.11, 2.01, 2.02 & 3.00	1B 12B					E O B3 LCD 960	ON-1 & -1-1, ADDED LDW280-17540-23(9), MS20615-4M3(54) ADDED SH 1.11.	LM-2 THRU LM-15	✓		L. DIXON 10-23-67 PAC		
	4	1.00, 2.00, 2.03, 2.04, 2.05, 3.00 & 4.00	9,14C 11B 15A			✓		E O B4 LCD 809	ADDED -11 & -13, -15 -17 -19, -21. FOR -1, 2 REQ'D PER MODULE WAS 4 REQD PER MODULE, FOR -1-1, 2 REQD PER MODULE WAS 4 REQD ADDED SH. 2.03, 2.04, 2.05 & 4.00 (-11 & -13 MAY BE MADE FROM -1-1)		NOTED				
	5						✓	LE0280-539 LCD-1242	CANCELLED BY LE0280-566	NOT REQD	NOT	REQD			
	6	2.00, 2.01, 2.02, 2.03, 2.04, 2.05 & 3.00	1B 3A,B 8A,B 11A,B 11C 10B				✓	E O B6	IN FLD & B/M, LDW280-17526-17, LDW280-17539-13, -14, -24 & -25, LDW280M17515-1 & -2, LDW280M17517-1 & -3 WERE ON-1, -1-1, -11 & -13. LDW280M17513-1 WAS ON -7. IN FLD LDW280-17540-17 WAS ON-3, -15 & -17. IN B/M, LDW280-17526-19, LDW280-17539-23 & -26, LDW280M17552-1 & -2, LDW280M17553-1 & -2 WERE ON-1, -1-1, -11 & -13. LDW280-17481-11 WAS ON-3, -15 & -17	LM-2 THRU LM-15 LTA-3DR	✓				
	7						✓	LE0280-566 LCD-1242	CANCELS LE0 280-539 (B5)	NOT REQD	NOT	REQD			
	8	1.11, 2.02, 2.05 & 3.00	9C 10C				✓	E O B8	ON -1 , ADDED MS20427M3-8(12) & REVISED NOTE 6 BOND WITH EC2216 WAS BOND WITH EPON 934. 12 1/4 WAS 12 5/16 IN FLD	LM-2 THRU LM-15	✓				
	9	2.02, 2.05, 3.00	9,10C				✓	E O B9	REF E O B8, FOR-1 SHOULD BE FOR-1, -1-1-11 & -13						
	10	1.11, 2.01, 2.02, 2.04, 2.05, 3.00 & 4.00	7A,C 8C 14B 15A			✓		E O B10	REF E O B4, ON-19, 55 SPOTWELDS WAS 56 ON-11, MS20615-3M3 (19 WAS (32). ADDED SHIM .010, MS20615-4M3(2) WAS MS20615 3M3(2) ON-21, 58 SPOTWELDS WAS 59. ON-13, MS20615-3M3(14) WAS MS20615-4M3(2) WAS MS20615-3M3(2). LDW28-17538-47 WAS LDW280-17538-36. IN FLD & B/M, FOR-1, -1-1, -11 & -13 DELETED LDW280-17556-15(6), FOR-9, -19, -21 DELETED LDW280M17550-4 & REPLACED WITH LDW280M17550-1						
C	1	1.00, 1.11, 2.00, 2.01, 2.02, 2.03, 2.04, 2.05, 2.06, 3.00 & 4.00	9,10C 19C,D 17A,C 20C				✓	E O C1 LCD-1932	FOR-1, -1-1, -11-13 ADDED -23 WEB ASSY (1) LDW280-18365-15(1) LDW280-18365-17(1), LDW280M17517-1(2), LDW280-17526-11 (2) WAS (1) LDW280-17526-13(4) WAS (2), LDW280-18365-19(1) LDW280-51517-1(1) MS20615-3M(130) MS20427-3M(6) & REMOVED LDW280M17517-3(1), FOR-9, -19-21 LDW280-17539-29 REPLACED LDW280-17539-21 & LDW28C-17543-23 REPLACED LDW280-17543-11. ADDED SH. 2.06						

CHG APPROVED

LTR	GROUP LDR	VEH DES INT	STRUCTURES	STRUCTURES	WEIGHTS	RELIABILITY
B						
C						

GRUMMAN AIRCRAFT ENGRG CORP., BETHPAGE, L. I., NEW YORK

SIZE	CODE IDENT NO.		
B	26512	LDW280-52663	C

SCALE NONE SHEET 1.11

ENG 77.16 3-66

01

NAS 9-1100

REVISIONS

CHANGE LTR	ITEM NO.	SHEET NO.	ZONE	GRUMMAN INFO ONLY	DET SPEC	CLASS I	CLASS II	ENGRG ORDER	DESCRIPTION	EFFECTIVITY	DISPOSITION OF EXISTING PARTS		CHANGED BY AND DATE	ENGRG APPD	[illegible] APPD
											REWORK	SCRAP			
C	2	1.12, 2.00 2.01, 2.02 2.03, 2.04 2.06, 3.00 4.00	9B,C 15C 16B,C 17A,C 18A 19C 19D 20C			✓		EOC2 LCD 1932	REF EOC1, FOR-1-1-1,-11&-13 SHOULD BE FOR-9-19&-21 (FOR) ADDED-23 ASSY(1), LDW280-18365-15(1), LDW280-18365-17(1), LDW280-17526-13 (4) WAS(2), LDW280-18365-19(1), LDW280-51517-1(1), MS20615-3M(130) & MS20427-3M(6). FOR-1,-1-1,-11&-13 DELETE; ADDED LDW280M17517-1 (2), LDW280-17526-11(2) WAS(1) AND REMOVED LDW280M17517-3(1) FOR-9,-19,&-21 ADDED LDW280M17517-3(2), LDW280-17526-21(1), LDW280-17526-11(4) WAS(3) AND REMOVED LDW280M17517-3(1) FOR-9-19&-21 DELETED LDW280-17539-27 REPLACED LDW280-17539-21 ADDED LDW280-17539-29 REPLACED LDW280-17539-21. FOR-19, LDW 280-17543-23 REPLACED LDW280-17543-11 SHOULD BE LDW280-17543-27 REPLACED LDW280-17543-15. FOR-21 LDW280-17543-23 REPLACED LDW280-17543-11 SHOULD BE LDW280-17543-25 REPLACED LDW280-17543-13 ADDED SH 1.12	LM-2 THRU LM-15	✓		L. DIXON 10-23-67		PA-C
	3	2.01, 2.02 & 3.00	1B 12B						REF EOB3, REMOVED DETAIL "L" & ADDED SECTIONS AJ-AJ & AK-AK CORRECTED VIEW LOOKING DOWN, (5) PLACES SHOWN WAS(4) (4) PLACES OPP WAS (5) PLACES						
	4	2.00 THRU 2.05 & 3.00	1,3,8, 11,ABC				✓		REF EOB6 EFF. SHOULD NOT INCLUDE LTA-3DR(46) LTA-3DR(46) CANCELLED BY LEO 280-566						
	5	2.00 THRU 2.06 3.00 & 4.00	9,10,17 19C,D			✓		LCD-1932	REF EOC1, REMOVED LDW280P18133-11(1) & MS20427M3-8(4) FROM FLD & B/M, REMOVED 27 SPOTWELDS .25 ED (ON ℄) & 12¼ DIM. DESCRIPTION SHOULD INCLUDE, ADDED LDW280-18365-12(1), LDW280-18367-19 (1), LDW280-18366-17(1) (ON-23) & SECTIONS AT-AT, AU-AU, AV-AV & AW-AW						
	6	1.12, 2, 2.01 2.02, 2.03, 2.04 2.06, 3, & 4	9C 10C 17,18 ABC			✓		LCD-1932	REF EOC2, DESCRIPTION SHOULD INCLUDE, ADDED LDW280-17526-11(4) (ON-23), MS20615-3M4(64) (ON-9-19&-21), MS20615-3M3(74) (ON-9-19&-21) MS20427-3M4 (ON-9-19&-21) & MS20615-3M3(8) (ON-23) WAS MS20615-3M (130) & MS20427-3M(6)						
	7	1.12, 4.00	14B 15,16A					LCD-809	REF EOB4, DESCRIPTION SHOULD INCLUDE ADDED DETAILS AL & AN, SECTIONS AM-AM, AP-AP, AR-AR & AS-AS						
									Ⓒ						

LTR	GROUP LDR	VEH DES INT	STRUCTURES	STRUCTURES	WEIGHTS	RELIABILITY				
C										

FOR CONTINUATION OF REVISIONS SEE SHEET ________

GRUMMAN AIRCRAFT ENGRG CORP, BETHPAGE, L. I., NEW YORK

SIZE	CODE IDENT NO.		
B	26512	LDW280-52663	C Ⓒ
SCALE NONE			SHEET 1.12

ENG 77.3 5-65

01

NAS 9-1100

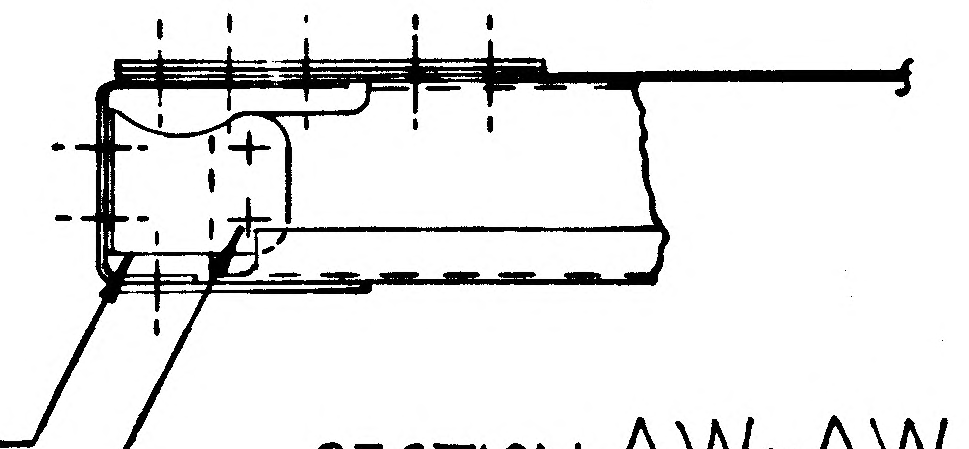

C2 LDW280-18365-19
(ON-9-194-21)
MS20615-3M3(4)
(ON-9-194-21)

SECTION AW~AW (ZONE 19C)
FULL SIZE

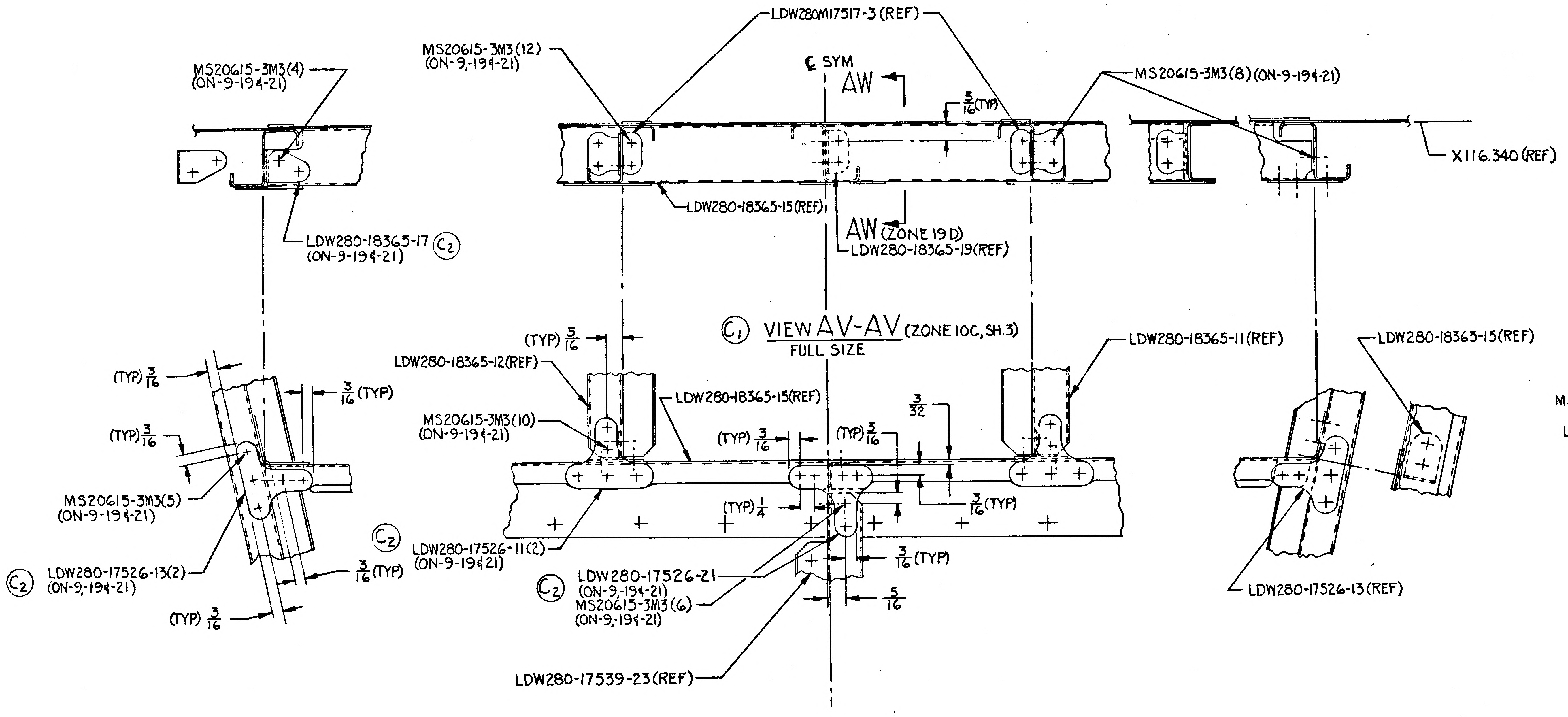

LDW280M17517-3 (REF)
MS20615-3M3 (12)
(ON-9,-194-21)
MS20615-3M3(4)
(ON-9-194-21)
℄ SYM
AW
5/16 (TYP)
MS20615-3M3 (8) (ON-9-194-21)
X116.340 (REF)
LDW280-18365-15(REF)
AW (ZONE 19D)
LDW280-18365-19(REF)
LDW280-18365-17 C2
(ON-9-194-21)
(TYP) 3/16
LDW280-18365-12(REF)
LDW280-18365-15(REF)
LDW280-18365-11(REF)
LDW280-18365-15(REF)
(TYP) 3/16
3/16 (TYP)
(TYP) 3/16
MS20615-3M3(10)
(ON-9-194-21)
(TYP) 3/16
(TYP) 3/16
3/32
(TYP) 1/4
3/16 (TYP)
MS20615-3M3(5)
(ON-9-194-21)
C2
LDW280-17526-11(2)
(ON-9-194-21)
C2 LDW280-17526-13(2)
(ON-9,-194-21)
3/16 (TYP)
C2 LDW280-17526-21
(ON-9,-194-21)
MS20615-3M3 (6)
(ON-9,-194-21)
3/16 (TYP)
5/16
(TYP) 3/16
LDW280-17539-23 (REF)
LDW280-17526-13 (REF)

C1 VIEW AV-AV (ZONE 10C, SH.3)
FULL SIZE

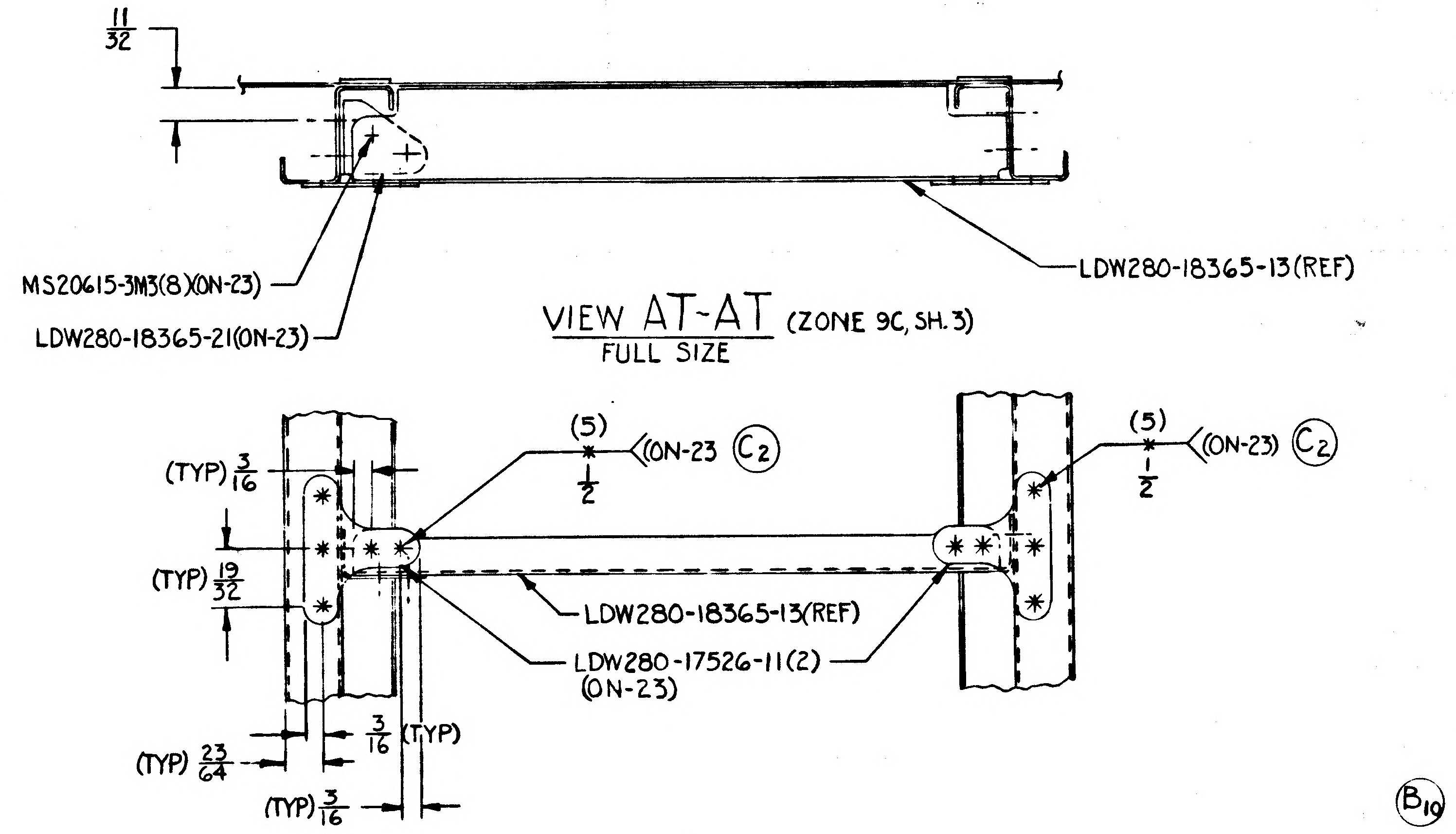

11/32
MS20615-3M3(8)(ON-23)
LDW280-18365-21(ON-23)
LDW280-18365-13(REF)
(TYP) 3/16
(5)
1/2
(ON-23) C2
(5)
1/2
(ON-23) C2
(TYP) 13/32
LDW280-18365-13(REF)
LDW280-17526-11 (2)
(ON-23)
3/16 (TYP)
(TYP) 23/64
(TYP) 3/16

VIEW AT-AT (ZONE 9C, SH.3)
FULL SIZE

LDW2

B10 (ON-19)

MS20615-3N
IN EXISTING
LOCATIONS

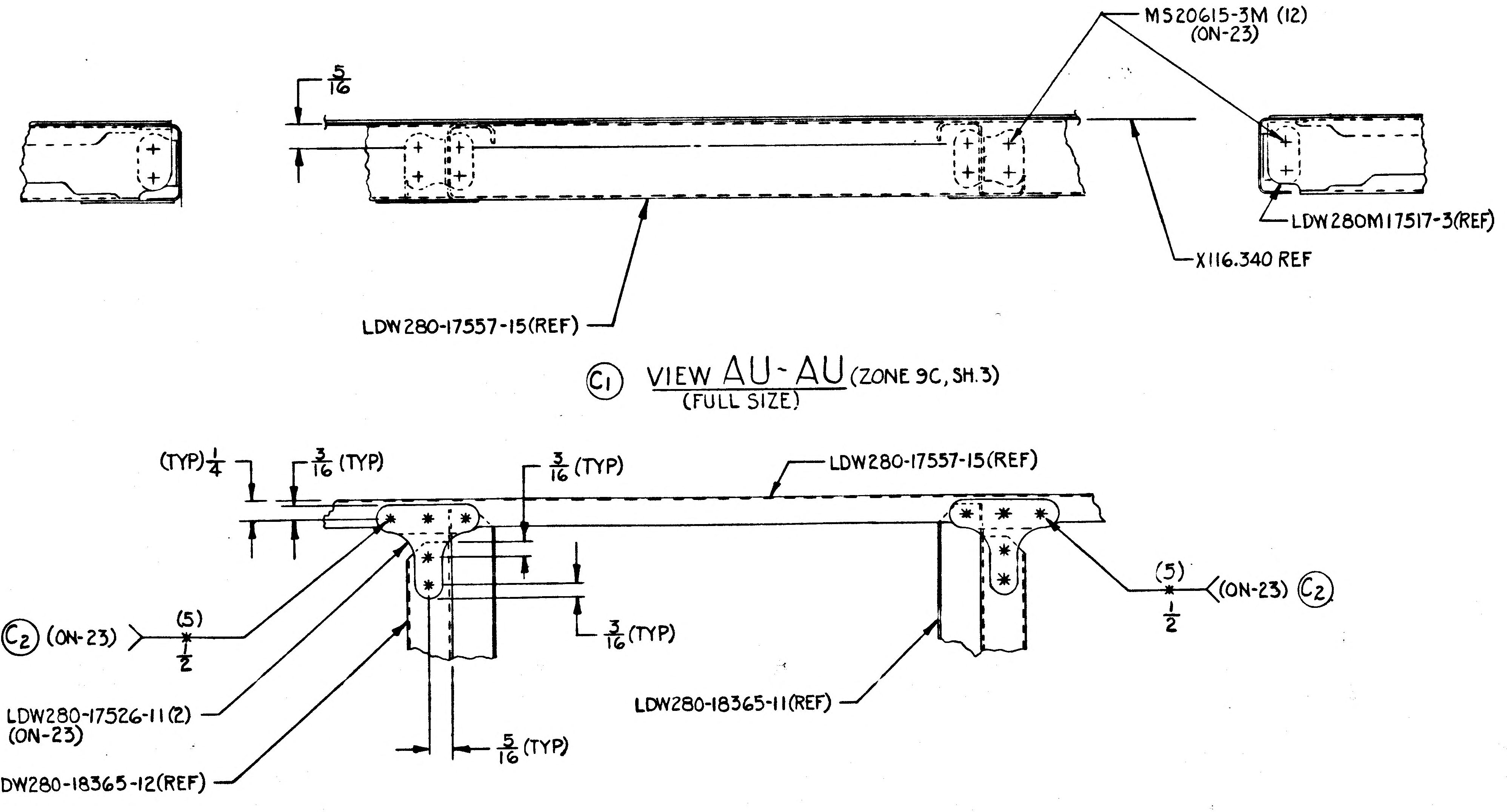

MS20615-3M (12)
(ON-23)
5/16
LDW280M17517-3(REF)
X116.340 REF
LDW280-17557-15(REF)
(TYP) 1/4
3/16 (TYP)
3/16 (TYP)
LDW280-17557-15(REF)
C2 (ON-23)
(5)
1/2
3/16 (TYP)
(5)
1/2
(ON-23) C2
LDW280-17526-11(2)
(ON-23)
LDW280-18365-12(REF)
5/16 (TYP)
LDW280-18365-11(REF)

C1 VIEW AU-AU (ZONE 9C, SH.3)
(FULL SIZE)

C2

01702 NAS 9-1100

LDW280-52663 | 4

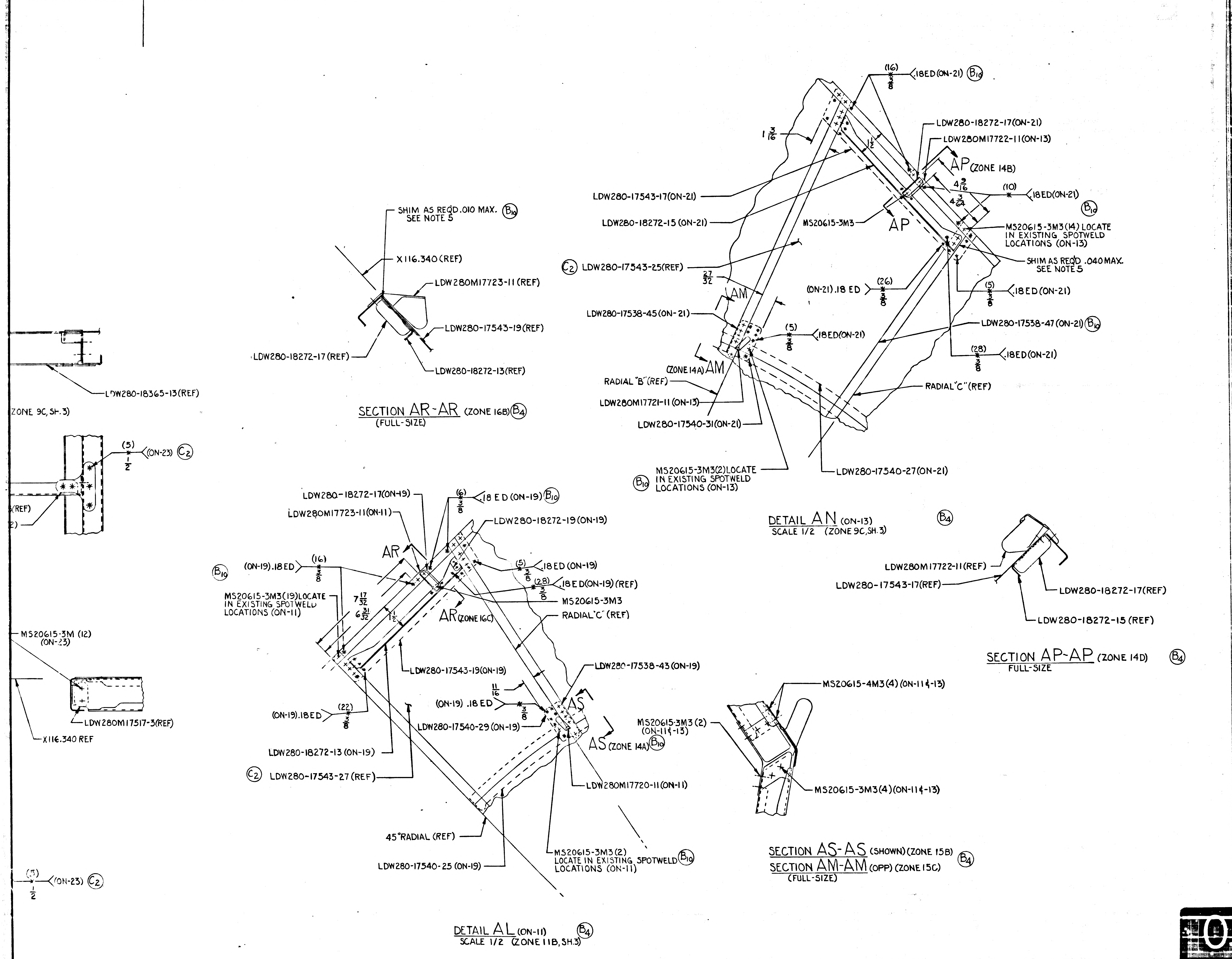
16
15
14
13
SHIM AS REQD .010 MAX. SEE NOTE 5 (B10)
X116.340 (REF)
LDW280M17723-11 (REF)
LDW280-17543-19 (REF)
LDW280-18272-17 (REF)
LDW280-18272-13 (REF)
LDW280-18365-13 (REF)
(ZONE 9C, SH. 3)
(5) 1/2 (ON-23) (C2)
(REF)
MS20615-3M (12) (ON-23)
LDW280M17517-3 (REF)
X116.340 REF
(5) 1/2 (ON-23) (C2)
(16) 3/8 .18ED (ON-21) (B10)
1 3/16
1/2
LDW280-18272-17 (ON-21)
LDW280M17722-11 (ON-13)
AP (ZONE 14B)
4 9/16
4 3/64
(10) .18ED (ON-21) (B10)
LDW280-17543-17 (ON-21)
LDW280-18272-15 (ON-21)
MS20615-3M3
AP
MS20615-3M3 (14) LOCATE IN EXISTING SPOTWELD LOCATIONS (ON-13)
SHIM AS REQD .040 MAX. SEE NOTE 5
(C2) LDW280-17543-25 (REF)
27/32
AM
(ON-21) .18 ED (26) 3/8
(5) 3/8 .18ED (ON-21)
LDW280-17538-45 (ON-21)
LDW280-17538-47 (ON-21) (B10)
(5) 3/8 .18ED (ON-21)
(28) 3/8 .18ED (ON-21)
(ZONE 14A) AM
RADIAL "B" (REF)
LDW280M17721-11 (ON-13)
LDW280-17540-31 (ON-21)
RADIAL "C" (REF)
(B10) MS20615-3M3 (2) LOCATE IN EXISTING SPOTWELD LOCATIONS (ON-13)
LDW280-17540-27 (ON-21)
LDW280M17722-11 (REF)
LDW280-17543-17 (REF)
LDW280-18272-17 (REF)
LDW280-18272-15 (REF)
LDW280-18272-17 (ON-19)
LDW280M17723-11 (ON-11)
(6) 3/8 .18 ED (ON-19) (B10)
LDW280-18272-19 (ON-19)
AR
(B10) (ON-19) .18ED (16) 3/8
(5) 3/8 .18ED (ON-19)
(28) 3/8 .18ED (ON-19) (REF)
MS20615-3M3
MS20615-3M3 (19) LOCATE IN EXISTING SPOTWELD LOCATIONS (ON-11)
7 17/32
6 31/32
1 1/2
AR (ZONE 16C)
RADIAL "C" (REF)
LDW280-17543-19 (ON-19)
LDW280-17538-43 (ON-19)
11/16
(ON-19) .18 ED 3/8
(ON-19) .18ED (22) 3/8
LDW280-17540-29 (ON-19)
AS
AS (ZONE 14A) (B10)
LDW280-18272-13 (ON-19)
(C2) LDW280-17543-27 (REF)
LDW280M17720-11 (ON-11)
45° RADIAL (REF)
LDW280-17540-25 (ON-19)
MS20615-3M3 (2) LOCATE IN EXISTING SPOTWELD LOCATIONS (ON-11) (B10)
MS20615-4M3 (4) (ON-11 & -13)
MS20615-3M3 (2) (ON-11 & -13) (B10)
MS20615-3M3 (4) (ON-11 & -13)

SECTION AR-AR (ZONE 16B) (B4)
(FULL-SIZE)

DETAIL AN (ON-13) (B4)
SCALE 1/2 (ZONE 9C, SH. 3)

SECTION AP-AP (ZONE 14D) (B4)
FULL-SIZE

DETAIL AL (ON-11) (B4)
SCALE 1/2 (ZONE 11B, SH. 3)

SECTION AS-AS (SHOWN) (ZONE 15B) (B4)
SECTION AM-AM (OPP) (ZONE 15C)
(FULL-SIZE)

LDW280-52663 4

MANUFACTURING OPERATIONS
UNLESS OTHERWISE SPECIFIED
NOTES CHECKED √ APPLY TO THIS DWG.

PART NUMBER AND ALL OTHER MARKINGS IN REGION MARKED ⊠ USE BOTH SIDES IF NECESSARY.

FILLET AND INSIDE CORNER RADII TOLERANCES
.016R TO .062R ± .010
.063R TO .250R ± .015
OVER .250R ± .030

DEPTH SHOWN FOR TAPPED HOLES IS FULL THDS. 2-3 IMP THDS. BEYOND PERMISSIBLE.

EXTERNAL THREAD LENGTH SHOWN INCLUDES 2 IMPERFECT THREADS MAX.

DO NOT CADMIUM PLATE & PAINT HOLES OR SURFACES MARKED WITH DOUBLE ASTERISK.

MISMATCH STEP OF ± .005 PERMISSIBLE DUE TO CHANGE OF CUTTERS AT INSIDE INTERSECTING SURFACES.

DIAMETERS MARKED MUST BE CONCENTRIC WITHIN FULL INDICATOR READING

HOLES MUST BE KEPT FREE OF CHROME PLATING SOLUTION.

ALL DIMENSIONS SHOWN TO BE MET AFTER CADMIUM PLATING. THICKNESS OF PLATE .0003 MIN. TO .0005 MAX. MIN. THICKNESS TO BE .0002 ON THREADED AREAS. NO ALLOWANCE FOR PLATING IN HOLES

125√ SURFACE ROUGHNESS INCLUDING REAMED HOLES PER MIL-STD-10

200√ FOR ALL DRILLED HOLES

REMOVE ALL BURRS. BREAK ALL EDGES .015-.031

INSPECTION INFORMATION MINIMUM PERMISSIBLE AVERAGE EDGE DISTANCE MARKED IS

SYMBOL √ DENOTES SURFACE TO BE MACHINED

UNLESS OTHERWISE SPECIFIED TOLERANCE ON FLANGES IS ± 1/32

LENGTHS OF AN, NAS & MS AL ALY RIVETS SHORTER THAN 1 INCH ARE NOT SPECIFIED.

TOLERANCE ON LOFTED DELINEATIONS IS

DWG SIZE 34 X 88
PRINTING INFO ONLY
FULL SIZE SHEET AREA (36 X 96) = 18.5 SQ. FT.
1/2 SIZE SHEET AREA (1/4 OF FULL) = 4.6 SQ. FT.
PRINT TRIM LINE

D
C
B
A

LDW280-52663 C
LDW280-52663 C

02/02
NAS 9-1100

	GRUMMAN AIRCRAFT ENGRG CORP., BETHPAGE, L. I., NEW YORK			
LM	SIZE J	CODE IDENT NO. 26512	LDW280-52663	C
MODEL OR END ITEM	SCALE FULL & NOTED		SHEET 4.00	

13
2 FRS

LDW280-52663D

MODEL OR END ITEM	NEXT ASSY	MODULE OR SER NO.	REQD PER MODULE OR END ITEM
LM	LDW280-25662	LM-4(34)	1 EA
LM	LDW280-25662	LM-3(33)	1 EA
LM	LDW280-25662	LM-2 (32)	1 EA

PART NO. LDW280-52663-11 & 13 | GAEC SCH NO.

MODEL OR END ITEM	NEXT ASSY	MODULE OR SER NO.	REQD PER MODULE OR END ITEM
LM	LDW280-25662	LM-2 (32)	2

PART NO. LDW280-52663-1 | GAEC SCH NO. 52

MODEL OR END ITEM	NEXT ASSY	MODULE OR SER NO.	REQD PER MODULE OR END ITEM
LM	LDW280-25662	LM-4(34)	2
LM	LDW280-25662	LM-3(33)	2

PART NO. LDW280-52663-1-1 | GAEC SCH NO. 52

WORK PKG FUNCTION NO. 110 ⑤

SH REV STATUS: FOR DESCRIPTION OF REV SEE SUBQ SH

SHEET	1.00	1.10	1.11	2.00	2.01	2.02	3.00	4.00
REV	D	C	C	D	D	D	D	C
SHEET	1.13	1.14	1.12	2.03	2.04	2.05	2.06	
REV	D	D	C	D	D	D	D	
SHEET								
REV								

LAST SECT LTR USED	AW	GRUMMAN REL INFO D	
LAST DASH NO. USED	-29	PRIM NO. 207	JK(001) ME-3D 11/26/68

UNLESS OTHERWISE SPECIFIED DIMENSIONS ARE IN INCHES.
TOLERANCE UNLESS SPECIFIED
FRACTIONS - DECIMALS - ANGLES
± 1/32 ± .020 ± 1/2°
ORIG DWG AUTH
DETAIL SPEC REQUIREMENT
CLASS II ENGRG CHANGE
CLASS I ENGRG CHANGE

CONTRACT NO. NAS 9-1100 | LINE ITEM | DOCUMENTATION TYPE

DRAWN BY	P. Como 1-18-67	RELIAB	
LAYOUT BY	D. WINK		
CHECKED BY	3.8.67		
GR. LDR			
VEH DES INT			
STRUCT.	3/14/67	PROJ ENGR	D.A. McCl 3/20/67
STRUCT.	3/16	REL GROUP	3/21/67
WEIGHT			

GRUMMAN AIRCRAFT ENGRG CORP
BETHPAGE, L. I., NEW YORK

PANEL ASSEMBLY
DESCENT STAGE-REMOVABLE BASE
HEAT SHIELD INSULATION SUPPORT

SIZE	CODE IDENT NO.		
B	26512	LDW280-52663	D

SCALE NONE | SHEET 1.00 OF 15

01

NAS 9-1100

REVISIONS FOR CONTINUATION OF REVISIONS SEE SHEET 1.14

CHANGE LTR	ITEM NO.	SHEET NO.	ZONE	GRUMMAN INFO ONLY	DET SPEC	CLASS I	CLASS II	ENGRG ORDER	DESCRIPTION	EFFECTIVITY	DISPOSITION OF EXISTING PARTS REWORK	DISPOSITION OF EXISTING PARTS SCRAP	CHANGED BY AND DATE	ENGRG APPD	GOVT APPD
D	1	1.00,1.13 2.00,2.01 2.02,2.03 2.05					✓	EO D1	IN B/M ONLY: ON-9 ASSY LDW280M17517-3(2) REQD WAS (1) REQD, ON-11 ASSY REMOVE -19 (1) REQD, ON-13 ASSY -21 (1) REQD REPLACES -17 (1) REQD, ON -15 ASSY ADD -19 (1) REQD, ON-17 ASSY ADD -21 (1) REQD ON-23 ASSY, REMOVE LDW280-17526-11 (4) REQD, LDW280M17517-3(2) REQD, MS20615-3M3 (8) REQD, LDW280-18365-11(1) REQD, LDW280-18365-12(1) REQD, LDW280-18365-13(1) REQD, LDW280-18365-21 (1) REQD, LDW280-18366-17(1) REQD LDW280-18367-19 (1) REQD, LDW280-17557-15 (1) REQD. ADDED SH 1.13	NOT REQD	NOT	REQD	R. GIORDANO 11-11-68 ES		
	2	1.00,2.00 2.01,2.02 2.03,2.04 2.05,2.06 3.00	9A	S			✓	E.O. D2 LCD 2532 LCD 2637	ADDED -25, -27 & -29 ASSYS. RESTRICTED -1-1 ASSY TO LM-3 THRU LM-4 (WAS) LM-3 THRU LM-15. RESTRICTED -11 & -13 ASSYS TO LM-2 THRU LM4 (WAS) LM-2 THRU LM-15	LM-5 THRU LM-15		-1-1 -11 -13			
	3	3.00	9A				✓	EO D3 LCD 2532 LCD 2637	REV. EO D2, ON -31, -37, -41, 7 SPOT WELDS WAS 5 ON VIEW ✱-✱, ADDED SPOT WELD. IN NOTES: REMOVED LDW280-18367-19 REPLACED LDW280-17757-11 WITH LDW280-17757-15 IN -27 & -29		✓				
	4	1.00					✓	LEO 280-1071 LCD 2965	IN MOD BLK. FOR -25, -27 & -29 RESTRICTED TO LM-5 ONLY WAS LM-5 THRU LM-15	LM-6 THRU LM-15		-25 -27 -29			
	5	3.00 2.01 2.06	9A	S			✓	EO D5 LCD 2965	IN F/D & B/M, ON-35 REMOVED LDW280-18367-19, ON-31 REMOVED LDW280-17557-11(2) & ON-37 & -41 REMOVED LDW280-17557-11	LM-5 THRU LM-15	✓				

CHG APPROVED	LTR	GROUP LDR	VEH DES INT	STRUCTURES	STRUCTURES	WEIGHTS	RELIABILITY
	D						

GRUMMAN AIRCRAFT ENGRG CORP., BETHPAGE, L. I., NEW YORK

SIZE	CODE IDENT NO.		
B	26512	LDW280-52663	D

SCALE NONE SHEET 1.13

ENG 77.16 3-66

01

NAS 9-1100

REVISIONS FOR CONTINUATION OF REVISIONS SEE SHEET

CHANGE LTR	ITEM NO.	SHEET NO.	ZONE	GRUMMAN INFO ONLY	DET SPEC	CLASS I	CLASS II	ENGRG ORDER	DESCRIPTION	EFFECTIVITY	DISPOSITION OF EXISTING PARTS REWORK	DISPOSITION OF EXISTING PARTS SCRAP	CHANGED BY AND DATE	ENGRG APPD	GOVT APPD
D	6	2.01, 2.04 3.00, 1.00 1.14	9C		✓			EO D6	REMOVED LDW280-17557-11 FROM FLD/DWG B/M, ADDED SH 1.14	LM-2 THRU LM-5	NOT	REQD	R. GIORDANO 11-11-68 ES		
	7	1.00 3.00 2.00, 2.01 2.02, 2.03 2.04, 2.05 2.06	9A			✓		LEO 280-1184 LCD 2965 CCA 1235 Ⓟ	RESTRICTED EFF OF -25, -27 & -29 BY REMOVING LM-5 PRODUCTION EFF	LM-5		-25 -27 -29			

CHG APPROVED LTR	GROUP LDR	VEH DES INT	STRUCTURES	STRUCTURES	WEIGHTS	RELIABILITY
D						

GRUMMAN AIRCRAFT ENGRG CORP., BETHPAGE, L. I., NEW YORK

SIZE	CODE IDENT NO.		
B	26512	LDW280-52663	D Ⓟ
SCALE NONE			SHEET 1.14

ENG 77.18 3-66

01

NAS 9-1100

QTY PER ASSEMBLY																	
-23	-1-1	-9	-7	-5	-3	-1	CODE IDENT	PART NO.	I&T	NOMENCLATURE OR DESCRIPTION	MATERIAL	GOVT SPEC	COML SPEC	STOCK SIZE	PROCESS SYM	FINISH NO.	ZONE
		1						LDW280-17539-26	E	STIFFENER	SEE DWG						FE
		1						-25	↕	↕	↕						11B
			1					-24	↕	↕	↕						5B
			1					-23	↕	↕	↕						10B
				1				-14	↕	↕	↕						5A
				1				-13	↕	↕	↕						11A
		1						LDW280-17539-29	↕	STIFFENER	↕						9B
	1					1		LDW280-17481-11	↕	ANGLE	↕						11C
				1				LDW280-17538-33	↕	STIFFENER	↕						9E
				3				-21	↕	↕	↕						10E
			4					-42	↕	↕	↕						9B
			3					-41	↕	↕	↕						10B
		1						-40	↕	↕	↕						9B
		1						-39	↕	↕	↕						10E
		1						-38	↕	↕	↕						8B
		1						-37	↕	↕	↕						10B
		1						-36	↕	↕	↕						8B
		1						LDW280-17538-35	↕	STIFFENER	↕						11B
				3				LDW280-17538-22	↕	STIFFENER	↕						9B
		2						LDW280-17526-19	↕	GUSSET	↕						3A
		2						-17	↕	↕	↕						3A
		2						-15	↕	↕	↕						8C
		4						-13	↕	↕	↕						7C
		4						LDW280-17526-11	↕	GUSSET	SEE DWG						8B
		1						LDW280-52663-23	↕	WELDED ASSEMBLY					TSW	NONE	9A
					1			LDW280-52663-9	↕	WELDED ASSEMBLY					TSW	NONE	9A
					1			-7	↕	↕					↕	↕	9A
					1			-5	↕	↕					↕	↕	9A
	1					1		-3	↕	WELDED ASSEMBLY					TWS	↕	9A
								LDW280-52663-1	E	PANEL ASSEMBLY					NONE	NONE	9A
								LDW280-52663-1-1	E	PANEL ASSEMBLY					NONE	NONE	9A

SYM OR NO.	PROCESS OR FINISH	GRUMMAN SPEC OR MILITARY SPEC	SYM OR NO.	PROCESS OR FINISH	GRUMMAN SPEC OR MILITARY SPEC	SYM OR NO.	PROCESS OR FINISH	GRUMMAN SPEC OR MILITARY SPEC
						TSW	SPOTWELD TI.	MIL-W-6858 CLASS "A"

I & T: IDENTIFICATION AND TRACEABILITY IN ACCORDANCE WITH : NONE

GRUMMAN AIRCRAFT ENGRG CORP, BETHPAGE, L. I., NEW YORK

SIZE	CODE IDENT NO.		
B	26512	LDW280-52663	D
SCALE NONE		SHEET 2.00	

ENG 77.2 7-65

01

NAS 9-1100

-23	-1-1	-9	-7	-5	-3	-1	CODE IDENT	PART NO.	I&T	NOMENCLATURE OR DESCRIPTION	MATERIAL	GOVT SPEC	COML SPEC	STOCK SIZE	PROCESS SYM	FINISH NO.	ZONE
		6						MS20427-3M4	E	RIVET	STD PART						
	3					3		LDW280M17516-2	E	SPLICE	SEE DWG						7A
	3					3		LDW280M17516-1		SPLICE							7A
		1						LDW280M17515-2		FITTING							3A
		1						LDW280M17515-1		FITTING							3A
	5					5		LDW280M17514-2		SPLICE							1B
	4					4		LDW280M17514-1		SPLICE							1B
	1					1		LDW280M17513-1		TEE							10B
	1					1		LDW280M17512-2		FITTING							9A
	1					1		LDW280M17512-1		FITTING							11A
	1					1		LDW280M17511-1		FITTING							9B
		1						LDW280-17557-14		CHANNEL							11C
		1						LDW280-17557-13		CHANNEL							9C
	1					1		LDW280-17556-14		CLIP							8A
	1					1		-13									8A
	4					4		-12									7A
	3					3		LDW280-17556-11		CLIP							11C
		1						LDW280-17543-23		WEB							9C
			1					LDW280-17542-11		WEB							9B
				1				LDW280-17541-11		WEB							9B
	9					9		LDW280-17540-23		CHANNEL							1B
		1						LDW280-17540-21		ANGLE							9B
		1						-19									10B
		1						-17									1B
				1				LDW280-17540-11	E	ANGLE	SEE DWG						10A

QTY PER ASSEMBLY

SYM OR NO.	PROCESS OR FINISH	GRUMMAN SPEC OR MILITARY SPEC	SYM OR NO.	PROCESS OR FINISH	GRUMMAN SPEC OR MILITARY SPEC	SYM OR NO.	PROCESS OR FINISH	GRUMMAN SPEC OR MILITARY SPEC

I & T: IDENTIFICATION AND TRACEABILITY IN ACCORDANCE WITH : NONE

GRUMMAN AIRCRAFT ENGRG CORP, BETHPAGE, L. I., NEW YORK

SIZE B

CODE IDENT NO. 26512

LDW280-52663 D

SCALE NONE

SHEET 2.01

ENG 77.2 7-65

01

NAS 9-1100

QTY PER ASSEMBLY																	
-23	-1-1	-9	-7	-5	-3	-1	CODE IDENT	PART NO.	I&T	NOMENCLATURE OR DESCRIPTION	MATERIAL	GOVT SPEC	COML SPEC	STOCK SIZE	PROCESS SYM	FINISH NO.	ZONE
								LDW280-17526-21	E	CLIP	SEE DWG						19E
		1						LDW280-18367-19	E	WEB	SEE DWG						10C
	AS REQD					AS REQD		SEE NOTE 5	E	SHIM							
		1						LDW280-51517-1	↑	COVER	SEE DWG						10C
	8	64				8		MS20615-3M4		RIVET							
	12					12		MS20615-4M4		RIVET	STD PART						
	298	84				298		MS20615-3M3		RIVET	STD PART						
	108					108		MS20615-3M2		↑	↑						
	80					80		MS20615-4M3		↓	↓						
	4					4		MS20427M3-3		RIVET	STD PART						
	8					8		MS20427M3-8		RIVET	STD PART						
	2					2		LDW280P18133-11		PLATE	SEE DWG						9C
								LDW280-18365-21		CLIP	SEE DWG						17C
				4				LDW280M17553-2		TEE	SEE DWG						11A
				3				LDW280M17553-1		↑	↑						11A
				1				LDW280M17552-2		↓							8E
				1				LDW280M17552-1		TEE							8E
		1						LDW280-18365-19		CLIP							19D
		1						LDW280-18365-17		CLIP							20C
		2						LDW280M17550-1		FITTING							7C
		2						LDW280M17550-3		FITTING							8C
		1						LDW280-18365-15		ANGLE							10C
								↑ -13		STIFFENER							9C
								↓ -12		STIFFENER							10C
								LDW280-18365-11		STIFFENER							9C
		4						LDW280M17517-3		FITTING							3B
								LDW280-18366-17	↓	PLATE	↓						10C
		2						LDW280M17517-1	E	FITTING	SEE DWG						8C

SYM OR NO.	PROCESS OR FINISH	GRUMMAN SPEC OR MILITARY SPEC	SYM OR NO.	PROCESS OR FINISH	GRUMMAN SPEC OR MILITARY SPEC	SYM OR NO.	PROCESS OR FINISH	GRUMMAN SPEC OR MILITARY SPEC

I & T: IDENTIFICATION AND TRACEABILITY IN ACCORDANCE WITH : NONE

GRUMMAN AIRCRAFT ENGRG CORP, BETHPAGE, L. I., NEW YORK

SIZE	CODE IDENT NO.		
B	26512	LDW280-52663	D ⑦

SCALE NONE

SHEET 2.02

ENG 77.2 7-65

01

NAS 9-1100

QTY PER ASSEMBLY																				
	-23	-7	-5	-21	-19	-17	-15	-13	-11	PART NO.	I&T	CODE IDENT	NOMENCLATURE OR DESCRIPTION	MATERIAL	GOVT SPEC	COML SPEC	STOCK SIZE	PROCESS SYM	FINISH NO.	ZONE
		1								LDW280-17539-23	E		STIFFENER	SEE DWG						10B
			1							-14										8A
			1							-13										11A
				1	1					LDW280-17539-29										9B
			1							LDW280-17538-33			STIFFENER							9B
			3							-21										10B
		4								-42										9B
		3								-41										10B
				1	1					-40										9B
				1	1					-39			STIFFENER							10B
				1						-45										15C
				1	1					-37										10B
					1					-36										8B
					1					-43										15B
			3							LDW280-17538-22			STIFFENER							9B
				2	2					LDW280-17526-19			GUSSET							3A
				2	2					-17										3A
				2	2					-15										8C
				4	4					-13										7C
				4	4					LDW280-17526-11			GUSSET							8B
								1	1	LDW280-17481-11			ANGLE	SEE DWG						11C
				1	1					LDW280-52663-23			WELDED ASSEMBLY					TSW	NONE	9A
						1	1			LDW280-52663-7			WELDED ASSEMBLY					TSW	NONE	9A
						1	1			-5										9A
						1				-21										9A
							1			-19										9A
								1		-17										9A
									1	-15			WELDED ASSEMBLY					TSW		9A
										-13			PANEL ASSEMBLY					NONE	NONE	9A
										LDW280-52663-11	E		PANEL ASSEMBLY					NONE	NONE	9A

SYM OR NO.	PROCESS SYM OR FINISH NO.	GRUMMAN SPEC OR MILITARY SPEC	SYM OR NO.	PROCESS SYM OR FINISH NO.	GRUMMAN SPEC OR MILITARY SPEC	SYM OR NO.	PROCESS SYM OR FINISH NO.	GRUMMAN SPEC OR MILITARY SPEC
						TSW	SPOTWELD TI	MIL-W-6858 CLASS"A"

I & T: IDENTIFICATION AND TRACEABILITY IN ACCORDANCE WITH NONE

GRUMMAN AIRCRAFT ENGRG CORP., BETHPAGE, L. I., NEW YORK

SIZE	CODE IDENT NO.		
B	26512	LDW280-52663	D
SCALE NONE		SHEET 2.03	

ENG 77.2 5-64

01

NAS 9-1100

	-23	-7	-5	-21	-19	-17	-15	-13	-11	PART NO.	I&T	CODE IDENT	NOMENCLATURE OR DESCRIPTION	MATERIAL	GOVT SPEC	COML SPEC	STOCK SIZE	PROCESS SYM	FINISH NO.	ZONE
				1	1					LDW280M17515-1	E		FITTING	SEE DWG						3A
								4	5	LDW280M17514-2			SPLICE							1B
								4	3	LDW280M17514-1			SPLICE							1B
								1	1	LDW280M17513-1			TEE							10B
								1	1	LDW280M17512-2			FITTING							9A
								1	1	LDW280M17512-1			FITTING							11A
								1	1	LDW280M17511-1			FITTING							9B
				1						LDW280-17540-31			PLATE							15C
					1					LDW280-17540-29			PLATE							16B
				1	1					LDW280-17557-14			CHANNEL							11C
				1	1					LDW280-17557-13			CHANNEL							9C
								1	1	LDW280-17556-14			CLIP							8A
								1	1	-13										8A
								4	4	-12										7A
								3	3	LDW280-17556-11			CLIP							11C
					1					LDW280-17543-19			PLATE							16B
				1						-17			PLATE							15D
					1					-27			WEB							16B
				1						LDW280-17543-25			WEB							15C
		1								LDW280-17542-11			WEB							9B
			1							LDW280-17541-11			WEB							9B
				1						LDW280-17540-27			ANGLE							14C
					1					-25			ANGLE							16A
								9	9	-23			CHANNEL							1B
				1	1					-17			ANGLE							1B
			1							LDW230-17540-11			ANGLE							10A
				1	1			1	1	LDW280-17539-26			STIFFENER							9B
				1	1					LDW280-17539-25			STIFFENER							11B
		1								LDW280-17539-24	E		STIFFENER	SEE DWG						8B

QTY PER ASSEMBLY

SYM OR NO.	PROCESS SYM OR FINISH NO.	GRUMMAN SPEC OR MILITARY SPEC	SYM OR NO.	PROCESS SYM OR FINISH NO.	GRUMMAN SPEC OR MILITARY SPEC	SYM OR NO.	PROCESS SYM OR FINISH NO.	GRUMMAN SPEC OR MILITARY SPEC

I & T: IDENTIFICATION AND TRACEABILITY IN ACCORDANCE WITH NONE

GRUMMAN AIRCRAFT ENGRG CORP., BETHPAGE, L. I., NEW YORK

SIZE	CODE IDENT NO.		
B	26512	LDW280-52663	D

SCALE NONE

SHEET 2.04

ENG 77.2 5-64

01

NAS 9-1100

QTY PER ASSEMBLY									PART NO.	I&T	CODE IDENT	NOMENCLATURE OR DESCRIPTION	MATERIAL	GOVT SPEC	COML SPEC	STOCK SIZE	PROCESS SYM	FINISH NO.	ZONE
-23	-7	-5	-21	-19	-17	-15	-13	-11											
							AS REQD	AS REQD	SEE NOTE 5	E		SHIM							
							1		LDW280M17721-11	↑		SPLICE	SEE DWG						15C
			64	64			8	8	MS20615-3M4			RIVET	STD PART						
							12	12	MS20615-4M4			↑	↑						
			84	84			319	324	MS20615-3M3										
							108	108	MS20615-3M2										
							82	82	MS20615-4M3			↓	↓						
							4	4	MS20427M3-3			RIVET	STD PART						
							8	8	MS20427M3-8			RIVET	STD PART						
			6	6					MS20427-3M4			RIVET	STD PART						
			1						LDW280-17538-47			STIFFENER	SEE DWG						14C
							2	2	LDW280P18133-11			PLATE	SEE DWG						9C
		4							LDW280M17553-2			TEE	↑						11A
		3							LDW280M17553-1			↑							11A
		1							LDW280M17552-2			↓							8B
		1							LDW280M17552-1			TEE							8B
							1		LDW280M17722-11			FITTING							14D
							1	1	LDW280M17723-11			FITTING							16C
			2	2					LDW280M17550-1			FITTING							7C
			2	2					LDW280M17550-3			FITTING							8C
				1					LDW280-18272-19			CLIP							15C
			1	1					↑ -17			ANGLE							14D
			1						↓ -15			ANGLE							15D
				1					LDW280-18272-13			ANGLE							16B
			4	4					LDW280M17517-3			FITTING							3B
			2	2					LDW280M17517-1			FITTING							8C
								1	LDW280M17720-11			SPLICE							15B
							3	3	LDW280M1716-2			SPLICE							7A
							3	3	LDW280M17516-1	↓		SPLICE	↓						7A
			1	1					LDW280M17515-2	E		FITTING	SEE DWG						3A

SYM OR NO.	PROCESS SYM OR FINISH NO.	GRUMMAN SPEC OR MILITARY SPEC	SYM OR NO.	PROCESS SYM OR FINISH NO.	GRUMMAN SPEC OR MILITARY SPEC	SYM OR NO.	PROCESS SYM OR FINISH NO.	GRUMMAN SPEC OR MILITARY SPEC

I & T: IDENTIFICATION AND TRACEABILITY IN ACCORDANCE WITH NONE

GRUMMAN AIRCRAFT ENGRG CORP., BETHPAGE, L. I., NEW YORK

SIZE B | CODE IDENT NO. 26512 | LDW280-52663 | D ⑤

SCALE NONE | SHEET 2.05

7.2 5-64

01

NAS 9-1100

	-23	-7	-5	-21	-19	-17	-15	-13	-11	PART NO.	I&T	CODE IDENT	NOMENCLATURE OR DESCRIPTION	MATERIAL	GOVT SPEC	COML SPEC	STOCK SIZE	PROCESS SYM	FINISH NO.	ZONE
				1	1					LDW280-17526-21	E		CLIP	SEE DWG						19B
				1	1					LDW280-51517-1	E		COVER	SEE DWG						10C
				1	1					LDW280-18367-19			WEB							10C
										LDW280-18365-21			CLIP							17C
				1	1					-19			CLIP							19D
				1	1					-17			CLIP							20C
				1	1					-15			ANGLE							10C
										-13			STIFFENER							9C
										-12			STIFFENER							10C
										LDW280-18365-11	E		STIFFENER	SEE DWG						9C

QTY PER ASSEMBLY

SYM OR NO.	PROCESS SYM OR FINISH NO.	GRUMMAN SPEC OR MILITARY SPEC	SYM OR NO.	PROCESS SYM OR FINISH NO.	GRUMMAN SPEC OR MILITARY SPEC	SYM OR NO.	PROCESS SYM OR FINISH NO.	GRUMMAN SPEC OR MILITARY SPEC

I&T: IDENTIFICATION AND TRACEABILITY IN ACCORDANCE WITH NONE

GRUMMAN AIRCRAFT ENGRG CORP., BETHPAGE, L. I., NEW YORK

SIZE	CODE IDENT NO.		
B	26512	LDW280-52663	D

SCALE NONE SHEET 2.06

ENG 77.2 5-64

01

NAS 9-1100

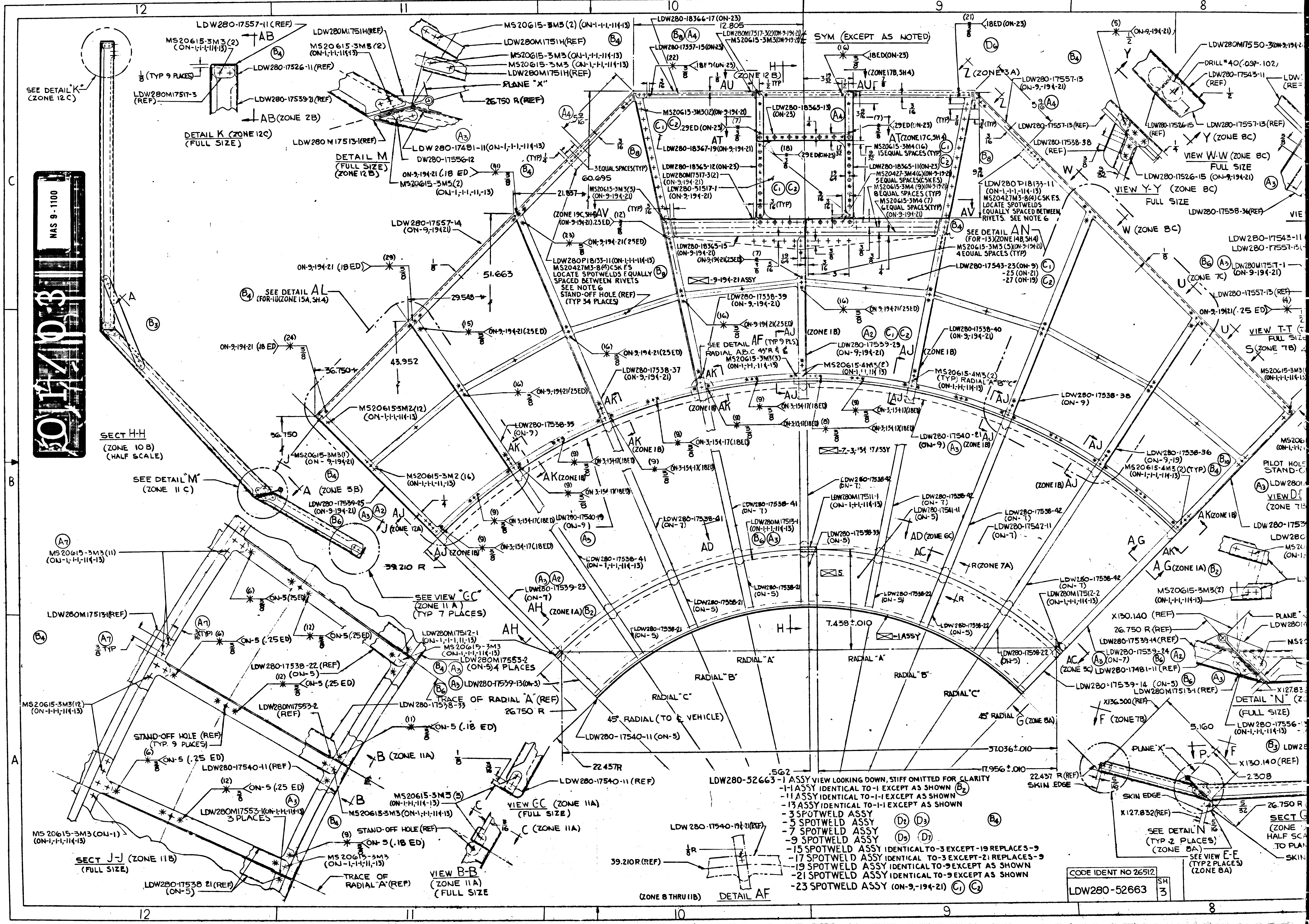
12
11
10
9
8
C
B
A
NAS 9-1100
LDW280-17557-11 (REF)
MS20615-3M3 (2) (ON-1,-1-1,-11 & -13)
AB
1/8 (TYP 9 PLACES)
LDW280-17526-11 (REF)
SEE DETAIL "K" (ZONE 12C)
LDW280M17517-3 (REF)
LDW280-17539-21 (REF)
AB (ZONE 2B)
DETAIL K (ZONE 12C) (FULL SIZE)
MS20615-3M3 (2) (ON-1-1-1,-11 & -13)
LDW280M1751H (REF)
MS20615-3M3 (2) (ON-1-1-1,-11 & -13)
LDW280M1751H (REF)
MS20615-3M3 (ON-1,-1-1,-11 & -13)
MS20615-3M3 (ON-1,-1-1,-11 & -13)
LDW280M1751H (REF)
PLANE "X"
26.750 R (REF)
LDW280M17513-1 (REF)
LDW280-17481-11 (ON-1,-1-1,-11 & -13)
DW280-17556-12
DETAIL M (FULL SIZE) (ZONE 12B)
MS20615-3M3 (2) (ON-1,-1-1,-11,-13)
LDW280-18366-17 (ON-23)
12.805
LDW280M17517-3 (2) (ON-9,-19 & -21)
MS20615-3M3 (ON-9,-19 & -21)
LDW280-17557-15 (ON-23)
SYM (EXCEPT AS NOTED)
18 ED (ON-23)
18 ED (ON-23)
(ZONE 12 B)
(ZONE 17B, SH 4)
Z (ZONE 3A)
LDW280-17557-13 (ON-9,-19 & -21)
AU
AT
MS20615-3M3 (12) (ON-9,-19 & -21)
LDW280-18365-13 (ON-23)
29 ED (ON-23)
LDW280-18367-19 (ON-9,-19 & -21)
LDW280-18365-12 (ON-23)
LDW280M17517-3 (2) (ON-9,-19 & -21)
LDW280-51517-1 (ON-9,-19 & -21)
29 ED (ON-23)
MS20615-3M4 (16) 15 EQUAL SPACES (TYP)
LDW280-18365-11 (ON-23)
MS20427-3M4 (6) (ON-9-19-21) 5 EQUAL SPACES (CSK F.S.)
MS20615-3M4 (9) (ON-9-19-21) 8 EQUAL SPACES (TYP)
MS20615-3M4 (7) 6 EQUAL SPACES (TYP) (ON-9-19-21)
LDW280P18133-11 (ON-1,-1-1,-11 & -13) MS20427M3-8 (4) CSK F.S. LOCATE SPOTWELDS EQUALLY SPACED BETWEEN RIVETS. SEE NOTE 6
AV
LDW280-17557-13 (REF)
LDW280-17538-38 (REF)
VIEW Y-Y (ZONE 8C) FULL SIZE
LDW280-17538-36 (REF)
W (ZONE 8C)
LDW280M17550-3 (ON-9,-19 & -21)
DRILL #40 (.097-.102)
LDW280-17543-11 (REF)
LDW280-17526-15 (REF)
LDW280-17557-13 (REF)
Y (ZONE 8C)
VIEW W-W (ZONE 8C) FULL SIZE
LDW280-17526-15 (ON-9,-19 & -21)
3 EQUAL SPACES (TYP)
60.695
21.837
MS20615-3M3 (3) (ON-9-19 & -21)
(ZONE 19C, SH 4)
(ON-9,-19 & -21) .25 ED
(ON-9,-19 & -21) (25 ED)
LDW280P18133-11 (ON-1,-1-1,-11 & -13) MS20427M3-8 (4) CSK F.S. LOCATE SPOTWELDS EQUALLY SPACED BETWEEN RIVETS SEE NOTE 6
STAND-OFF HOLE (REF) (TYP 34 PLACES)
LDW280-18365-15 (ON-9-19-21)
ON-9,-19 & -21 (25 ED)
-9,-19 & -21 ASSY
SEE DETAIL AN (FOR-13) (ZONE 14B, SH 4)
MS20615-3M3 (5) (ON-9-19-21) 4 EQUAL SPACES (TYP)
LDW280-17543-23 (ON-9) -25 (ON-21) -27 (ON-19)
LDW280-17543-11
LDW280-17557-13
LDW280M17517-1 (ON-9-19 & -21)
U (ZONE 7C)
LDW280-17557-13 (REF)
ON-9,-19 & -21 (.25 ED)
VIEW T-T FULL SIZE
S (ZONE 7B)
LDW280-17557-14 (ON-9,-19 & -21)
51.663
ON-9,-19 & -21 (18 ED)
SEE DETAIL AL (FOR-11) (ZONE 15A, SH 4)
29.548
ON-9,-19 & -21 (25 ED)
ON-9,-19 & -21 (18 ED)
36.750
43.952
MS20615-3M2 (12) (ON-1,-1-1,-11 & -13)
LDW280-17538-39 (ON-9,-19 & -21)
(ZONE 1B)
SEE DETAIL AF (TYP 9 PLS) RADIAL A,B,C 45° R & ℄
MS20615-3M3 (3) (ON-1,-1-1,-11 & -13)
LDW280-17539-29 (ON-9,-19 & -21)
MS20615-4M3 (2) (ON-1,-1-1,-11 & -13)
LDW280-17538-40 (ON-9,-19 & -21)
MS20615-4M3 (2) (TYP) RADIAL "A" "B" "C" (ON-1,-1-1,-11 & -13)
LDW280-17538-37 (ON-9,-19 & -21)
LDW280-17538-38 (ON-9)
AK
AJ
ON-3,-15 & -17 (18 ED)
LDW280-17540-21 (ON-9)
LDW280-17538-36 (ON-9,-19)
MS20615-3M3 (2) (TYP) (ON-1,-1-1,-11 & -13)
SECT H-H (ZONE 10 B) (HALF SCALE)
MS20615-3M3 (1) (ON-9,-19 & -21)
SEE DETAIL "M" (ZONE 11 C)
A (ZONE 3B)
MS20615-3M2 (16) (ON-1,-1-1,-11,-13)
LDW280-17538-35 (ON-9)
AK (ZONE 1B)
AK (ZONE 1B)
-7,-3,-15 & 17 ASSY
LDW280-17538-42 (ON-7)
LDW280M17511-1 (ON-1,-1-1,-11 & -13)
LDW280-17538-41 (ON-7)
LDW280M17513-1 (ON-1-1,-11 & -13)
LDW280-17538-33 (ON-5)
LDW280-17538-42 (ON-7)
LDW280-17541-11 (ON-5)
AD (ZONE 6C)
LDW280-17538-42 (ON-7)
LDW280-17542-11 (ON-7)
AC
AD
LDW280-17539-25 (ON-9,-19 & -21)
AJ (ZONE 12A)
LDW280-17540-19 (ON-9)
AJ (ZONE 1B)
ON-3,-15 & -17 (18 ED)
LDW280-17538-41 (ON-1,-1-1,-11 & -13)
R (ZONE 7A)
AG
AK (ZONE 1B)
AG (ZONE 1A)
MS20615-3M3 (2) (ON-1,-1-1,-11 & -13)
MS20615-3M3 (11) (ON-1,-1-1,-11 & -13)
39.210 R
SEE VIEW "C-C" (ZONE 11 A) (TYP 7 PLACES)
LDW280-17539-23 (ON-7)
AH (ZONE 1A)
LDW280-17538-21 (ON-5)
LDW280-17538-22 (ON-5)
LDW280-17538-21 (ON-5)
LDW280-17538-22 (ON-5)
LDW280-17538-22 (ON-5)
LDW280M17512-2 (ON-1,-1-1,-11 & -13)
LDW280-17538-42 (ON-7)
X130.140 (REF)
PLANE "X"
26.750 R (REF)
LDW280-17539-14 (REF)
LDW280-17539-24 (ON-7)
LDW280-17481-11 (REF)
LDW280-17539-14 (ON-5)
LDW280M17513-1 (REF)
DETAIL "N" (FULL SIZE)
LDW280-17556- (ON-1,-1-1,-11 & -13)
LDW280M17513 (REF)
(ON-5) (.25 ED)
7.438 ± .010
H
-1 ASSY
-5
AH
LDW280M17512-1 (ON-1,-1-1,-11,-13)
MS20615-3M3
LDW280M17553-2 (ON-5) 4 PLACES
LDW280-17539-13 (ON-5)
TRACE OF RADIAL "A" (REF)
26.750 R
LDW280-17538-33
LDW280M17553-2 (REF)
LDW280-17538-22 (REF) (ON-5)
ON-5 (.25 ED)
RADIAL "A"
RADIAL "A"
RADIAL "B"
RADIAL "B"
RADIAL "C"
RADIAL "C"
45° RADIAL (TO ℄ VEHICLE)
45° RADIAL
G (ZONE 8A)
AC (ZONE 3C)
X136.500 (REF)
F (ZONE 7B)
5.160
LDW280-17540-11 (ON-5)
22.437 R
57.036 ± .010
17.956 ± .010
.562
22.437 R (REF)
SKIN EDGE
PLANE "X"
P
F
X130.140 (REF)
2.308
26.750 R
SKIN EDGE
X127.832 (REF)
SEE DETAIL "N" (TYP 2 PLACES) (ZONE 8A)
SEE VIEW E-E (TYP 2 PLACES) (ZONE 8A)
SECT G (ZONE HALF SCALE)
LDW280M17513-1 (REF)
STAND-OFF HOLE (REF) (TYP. 9 PLACES)
ON-5 (.25 ED)
LDW280-17540-11 (REF)
ON-5 (.25 ED)
ON-5 (.18 ED)
B (ZONE 11A)
LDW280-17540-11 (REF)
MS20615-3M3 (3) (ON-1-1-1,-11 & -13)
MS20615-3M3 (ON-1,-1-1,-11 & -13)
B
VIEW C-C (ZONE 11A) (FULL SIZE)
C (ZONE 11A)
LDW280M17553-1 (ON-1,-1-1,-11 & -13) 3 PLACES
MS20615-3M3 (ON-1) (ON-1,-1-1,-11 & -13)
SECT J-J (ZONE 11B) (FULL SIZE)
STAND-OFF HOLE (REF)
ON-5 (.18 ED)
MS20615-3M3 (ON-1,-1-1,-11,-13)
TRACE OF RADIAL "A" (REF)
LDW280-17538-21 (REF) (ON-5)
VIEW B-B (ZONE 11 A) (FULL SIZE)
LDW280-17540-19 & -21 (REF)
1/8 R
39.210 R (REF)
(ZONE 8 THRU 11B)
DETAIL AF

LDW280-52663-1 ASSY VIEW LOOKING DOWN, STIFF OMITTED FOR CLARITY
-1-1 ASSY IDENTICAL TO -1 EXCEPT AS SHOWN (B2)
-11 ASSY IDENTICAL TO -1-1 EXCEPT AS SHOWN
-13 ASSY IDENTICAL TO -1-1 EXCEPT AS SHOWN
-3 SPOTWELD ASSY
-5 SPOTWELD ASSY (D2) (D3)
-7 SPOTWELD ASSY
-9 SPOTWELD ASSY (D5) (D7)
-15 SPOTWELD ASSY IDENTICAL TO -3 EXCEPT -19 REPLACES -9
-17 SPOTWELD ASSY IDENTICAL TO -3 EXCEPT -21 REPLACES -9
-19 SPOTWELD ASSY IDENTICAL TO -9 EXCEPT AS SHOWN
-21 SPOTWELD ASSY IDENTICAL TO -9 EXCEPT AS SHOWN
-23 SPOTWELD ASSY (ON-9,-19 & -21) (C1) (C2)

CODE IDENT NO 26512	SH
LDW280-52663	3

8
7
6
5
4
VIEW Y-Y (ZONE 8C)
FULL SIZE
VIEW W-W (ZONE 8C)
FULL SIZE
VIEW V-V (ZONE 7C)
FULL SIZE
VIEW U-U (ZONE 8B)
FULL SIZE
VIEW T-T (ZONE 7B)
FULL SIZE
VIEW S-S (ZONE 8B) FULL SIZE
VIEW D-D (ZONE 7B)
VIEW E-E (ZONE 7B) (FULL SIZE)
SECT F-F (ZONE 8A) (FULL SIZE)
SECT AD-AD (ZONE 10B) FULL SIZE
DETAIL "N" (ZONE 8A) (FULL SIZE)
SECT GG (ZONE 9A) HALF SCALE TO PLANE "X"
SECT R-R (TYP FOR RADIAL "A" "B" "C") (ZONE 9 B) (FULL SIZE)
VIEW P-P (ZONE 8A) FULL SCALE
VIEW "A-A" (FULL S
LDW280M17550-1 (ON-9,-19,-21)(2 PLACES)
LDW280M17550-3(ON-3,-19,-21)(2 PLACES)
LDW280-17543-11 (REF)
DRILL *40 (.097-.102)
(ON-1,-11,-114-13)
LDW280-17557-13 (REF)
LDW280-17526-13 (REF)
LDW280-17526-15 (ON-9,-19,-21)
LDW280-17538-36 (REF)
LDW280-17538-38 (REF)
LDW280-17557-13 (REF)
TRACE OF RADIAL "A" (REF)
TRACE OF RADIAL "B" (REF)
TRACE OF RADIAL "C" (REF)
MS20615-3M4 (2) (ON-1,-11,-114-13)
MS20615-4M4 (4) (ON-1,-11,-114-13)
MS20615-3M3 (12) (ON-1,-11,-114-13)
MS20615-3M4 (2) (ON-1,-11,-114-13)
LDW280M17513-1 (REF)
LDW280M17516-1 (REF)
LDW280-17481-1 (REF)
LDW280M17511-1 (REF)
LDW280M17516-2 (REF)
LDW280-17540-17 (REF)
MS20427M3-3 (2) (ON-1,-11,-114-13) CSK NEAR SIDE
MS20615-3M3 (2) (ON-1,-11,-114-13) (TYP) RADIAL "A" "B" "C"
MS20615-3M3 (TYP) RADIAL "A" "B" "C" (ON-1,-11,-114-13)
MS20615-3M3 (12) (ON-1,-11,-114-13)
MS20615-4M3 (2) (ON-1,-11,-114-13)
MS20615-4M3 (2) (ON-1,-11,-114-13) (TYP) RADIAL "A" "B" "C"
MS20615-3M3 (2) (ON-1,-11,-114-13)
LDW280-17538-22 (REF) (ON-5)
1/16 (TYP) FOR STIFFENERS
LDW280M17517-1 (ON-9-19-21)
LDW280-17539-26 (REF)
LDW280-17526-11 (2)
LDW280-17540-11 (REF)
LDW280M17553-2 (REF)
LDW280-17539-14 (REF)
LDW280-17541-11 (REF)
MS20615-3M3 (2) (TYP)
LDW280M17513-1 (REF)
MS20615-3M3 (10) (ON-1,-11,-114-13)
HEAT SHIELD
45° RADIAL (REF)
PILOT HOLE FOR STAND-OFF (REF)
LDW280M17552-2 (SHN) -1 (OPP) (ON-5)
MS20615-3M2 (12) (ON-1-1-1-114-13)
MS20615-3M3 (ON-1,-11,-114-13)
MS20615-3M2 (6) (ON-1,-11,-114-13)
MS20615-3M3 (2) (ON-1,-11,-114-13)
LDW280-17539-26 (ON-9,-19,-21)
LDW280-17538-36 (ON-9,-19)
MS20615-4M3 (2) (TYP) (ON-1,-1,-11,-114-13)
LDW280-17538-38 (ON-9)
LDW280-17538-42 (ON-7)
LDW280M17512-2 (ON-1,-11,-114-13)
LDW280M17512-2 (REF)
MS20615-3M3 (2)
22.437 R
X130.140 (REF)
26.750 R (REF)
PLANE "X"
LDW280-17539-14 (REF)
LDW280-17539-24 (ON-7)
LDW280-17481-11 (REF)
LDW280-17539-14 (ON-5)
LDW280M17513-1 (REF)
MS20615-3M3 (4) (ON-1,-11,-114-13)
5/32 (TYP 9 PLACES)
LDW280-17539-24 (REF)
X127.832 (REF)
X136.300 (REF)
LDW280-17556-13 (SHOWN) (ON-1,-11,-114-13) -14 (OPP)
LDW280-17540-23 (REF)
39.210 R (REF)
X116.340 (REF)
LDW280-17526-11 (REF)
5.160
2.308
SKIN EDGE
SEE DETAIL N (TYP 2 PLACES) (ZONE 8A)
SEE VIEW E-E (TYP 2 PLACES) (ZONE 8A)
13.800
LDW280-17538-22 (REF)
LDW280-17481-11 (REF)
LDW280-17556-12 (3) (SHOWN) (ON-1,-11,-11,-13) -11 (3) (OPP)
MS20615-3M3 (2) (ON-1,-11,-114-13)
LDW280M17513-1 (REF)
LDW280M17516-1 (SHOWN) (ON-1,-11,-114-13) -2 (OPP)
LDW280-17538-22 (REF)
MS20615-3M3 (ON-1,-11,-114-13)
MS20615-3M3 (2) (ON-1,-11,-114-13)
26.750 R (REF)
STAND-OFF (REF) (TYP 56 PLACES)
MS20615-3M2 (9) (ON-1,-11,-114-13)
MS20615-3M2 (10) (ON-1,-11,-114-13)
MS20615-3M2 (8) (ON-1,-11,-114-13)
LDW280-17542-11 (REF)
MS20615-4M3 (2) (ON-1,-11,-114-13)
ON-3,-15,-17 (.18 ED)
ON-7 (.25 ED)
ON-7 (.18 ED)
ON-5 (.25 ED)
ON-5 (.18 ED)
ON-13 (.25 ED)
ON-15 (.25 ED)
ON-3 (.18 ED)
ON-9,-19,-21 (.25 ED)
45° RADIAL (REF)
LDW280-17557-11 (REF)
LDW280-17538-16 (REF)
MS20615-3M3 (5) (ON-1,-11,-114-13)
LDW280-17543-11 (REF)
SECTION

CODE IDENT NO 26512
LDW280-52663 SH 3

102/031 NAS 9-1100

CODE IDENT NO 26512
LDW280-52663 SH 3

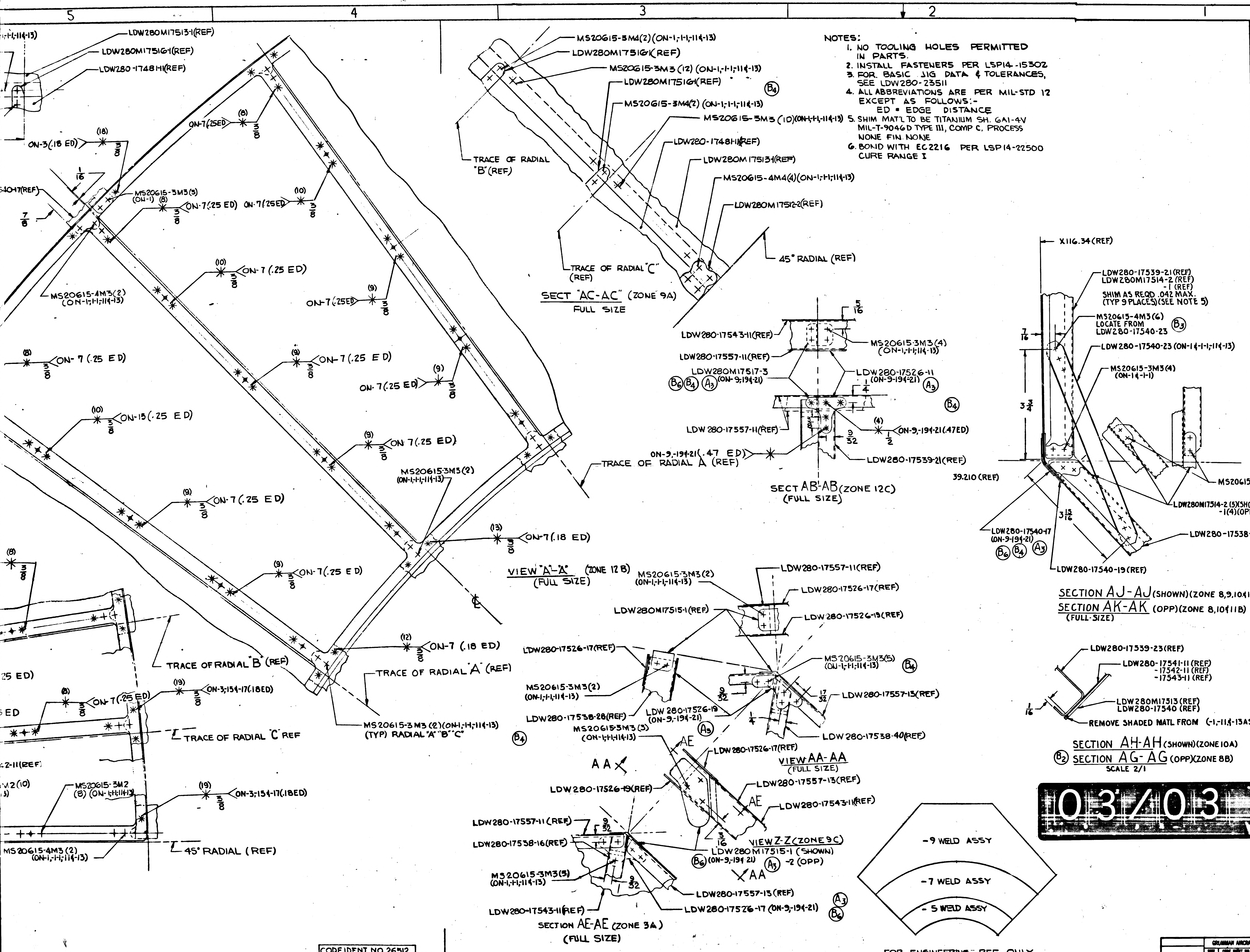

5
4
3
2
1
LDW280M17513-1(REF)
LDW280M17516-1(REF)
LDW280-17481-1(REF)
ON-3(.18 ED)
(18)
ON-7(.25ED)
(8)
1/16
7/8
MS20615-3M3(3) (ON-1)
ON-7(.25 ED)
ON-7(.25ED)
(10)
ON-7(.25 ED)
ON-7(.25ED)
(9)
MS20615-4M3(2) (ON-1,-1-1,-11&-13)
ON-7 (.25 ED)
ON-7 (.25 ED)
ON-7(.25 ED)
ON-13(.25 ED)
ON 7(.25 ED)
ON-7(.25 ED)
ON-7(.18 ED)
(13)
ON-7(.25 ED)
MS20615-3M3(2) (ON-1,-1-1,-11&-13)
VIEW "A"-"A" (ZONE 12 B) (FULL SIZE)
TRACE OF RADIAL "B" (REF)
TRACE OF RADIAL "A" (REF)
TRACE OF RADIAL "C" REF
45° RADIAL (REF)
ON-7 (.18 ED)
(12)
ON-7(.25 ED)
ON-3;15&-17(.18ED)
(19)
MS20615-3M2 (8) (ON-1,-1-1,-11&-13)
MS20615-4M3 (2) (ON-1,-1-1,-11&-13)
MS20615-3M3 (2)(ON-1,-1-1,-11&-13) (TYP) RADIAL "A" "B" "C"
MS20615-3M4(2)(ON-1,-1-1,-11&-13)
LDW280M17516-1(REF)
MS20615-3M3 (12) (ON-1,-1-1,-11&-13)
LDW280M17516-1(REF)
MS20615-3M4(2) (ON-1,-1-1,-11&-13)
MS20615-3M3 (10)(ON-1,-1-1,-11&-13)
LDW280-17481-1(REF)
LDW280M17513-1(REF)
MS20615-4M4(4)(ON-1,-1-1,-11&-13)
LDW280M17512-2(REF)
TRACE OF RADIAL "B" (REF)
TRACE OF RADIAL "C" (REF)
45° RADIAL (REF)
SECT "AC-AC" (ZONE 9A) FULL SIZE
TRACE OF RADIAL A (REF)
ON-9,-19&-21(.47 ED)
LDW280-17543-11(REF)
LDW280-17557-11(REF)
LDW280M17517-3 (ON-9,-19&-21)
MS20615-3M3(4) (ON-1,-1-1,-11&-13)
LDW280-17526-11 (ON-9-19&-21)
LDW 280-17557-11(REF)
ON-9,-19&-21(.47ED)
LDW280-17539-21(REF)
SECT AB-AB (ZONE 12C) (FULL SIZE)
5/16
1/4
9/32
1/2
X116.34 (REF)
LDW280-17539-21 (REF)
LDW280M17514-2 (REF)
-1 (REF)
SHIM AS REQD .042 MAX. (TYP 9 PLACES)(SEE NOTE 5)
MS20615-4M3(6) LOCATE FROM LDW280-17540-23
LDW280-17540-23 (ON-1&-1-1,-11&-13)
MS20615-3M3(4) (ON-1&-1-1)
7/16
3 3/4
3 13/16
39.210 (REF)
MS20615-4M3(4)
LDW280M17514-2 (5)(SHOWN)(ON-1,-1-1&-11)(4)(ON-13)
-1(4)(OPP)(ON-1,-1-1,&-13)(3)(ON-11)
LDW280-17538-42 (REF)
LDW280-17540-17 (ON-9-19&-21)
LDW280-17540-19 (REF)
SECTION AJ-AJ (SHOWN)(ZONE 8,9,10&11B)
SECTION AK-AK (OPP)(ZONE 8,10&11B)
(FULL-SIZE)
LDW280-17539-23(REF)
LDW280-17541-11 (REF)
-17542-11 (REF)
-17543-11 (REF)
LDW280M17513 (REF)
LDW280-17540 (REF)
1/16
REMOVE SHADED MATL FROM (-1,-11&-13ASSY)
SECTION AH-AH (SHOWN)(ZONE 10A)
SECTION AG-AG (OPP)(ZONE 8B)
SCALE 2/1
MS20615-3M3(2) (ON-1,-1-1,-11&-13)
LDW280-17557-11(REF)
LDW280-17526-17(REF)
LDW280M17515-1(REF)
LDW 280-17526-19(REF)
LDW280-17526-17(REF)
MS20615-3M3(5) (ON-1,-1-1,-11&-13)
MS20615-3M3(2) (ON-1,-1-1,-11&-13)
LDW 280-17557-13(REF)
LDW280-17538-28(REF)
LDW 280-17526-19 (ON-9,-19&-21)
LDW 280-17538-40(REF)
MS20615-3M3(3) (ON-1,-1-1,-11&-13)
9/32
17/32
1/4
AA
AE
LDW 280-17526-17(REF)
VIEW AA-AA (FULL SIZE)
LDW280-17526-19(REF)
LDW280-17557-13(REF)
LDW280-17543-11(REF)
LDW280-17557-11 (REF)
LDW280-17538-16(REF)
9/32
3/16
VIEW Z-Z (ZONE 9C)
LDW280M17515-1 (SHOWN) (ON-9,-19&-21) -2 (OPP)
MS20615-3M3(5) (ON-1,-1-1,-11&-13)
LDW280-17557-13 (REF)
LDW280-17543-11(REF)
LDW280-17526-17 (ON-9,-19&-21)
SECTION AE-AE (ZONE 3A) (FULL SIZE)
-9 WELD ASSY
-7 WELD ASSY
-5 WELD ASSY
B4
B6
A3
B3
B2
A
B
C

NOTES:

1. NO TOOLING HOLES PERMITTED IN PARTS.
2. INSTALL FASTENERS PER LSP14-15302
3. FOR BASIC JIG DATA & TOLERANCES, SEE LDW280-23511
4. ALL ABBREVIATIONS ARE PER MIL-STD 12 EXCEPT AS FOLLOWS:- ED = EDGE DISTANCE
5. SHIM MAT'L TO BE TITANIUM SH. 6AI-4V MIL-T-9046D TYPE III, COMP C. PROCESS NONE FIN. NONE
6. BOND WITH EC2216 PER LSP14-22500 CURE RANGE I

FOR ENGINEERING REF ONLY

03/03

NAS 9-1100

MANUFACTURING OPERATIONS

UNLESS OTHERWISE SPECIFIED
NOTES CHECKED ✓ APPLY TO THIS DWG.

RUBBER STAMP PART NUMBER AND ALL OTHER MARKINGS IN REGION MARKED ⊠ USE BOTH SIDES IF NECESSARY.	✓
FILLET AND INSIDE CORNER RADII TOLERANCES .016R TO .062R ± .010 .063R TO .250R ± .015 OVER .250R ± .030	
DEPTH SHOWN FOR TAPPED HOLES IS FULL THDS. 2-3 IMP THDS. BEYOND PERMISSIBLE.	
EXTERNAL THREAD LENGTH SHOWN INCLUDES 2 IMPERFECT THREADS MAX.	
DO NOT CADMIUM PLATE & PAINT HOLES OR SURFACES MARKED WITH DOUBLE ASTERISK.	
MISMATCH STEP OF ± .005 PERMISSIBLE DUE TO CHANGE OF CUTTERS AT INSIDE INTERSECTING SURFACES.	
DIAMETERS MARKED MUST BE CONCENTRIC WITHIN FULL INDICATOR READING	
HOLES MUST BE KEPT FREE OF CHROME PLATING SOLUTION.	
ALL DIMENSIONS SHOWN TO BE MET AFTER CADMIUM PLATING. THICKNESS OF PLATE .0003 MIN. TO .0005 MAX. MIN. THICKNESS TO BE .0002 ON THREADED AREAS. NO ALLOWANCE FOR PLATING IN HOLES	
125 SURFACE ROUGHNESS INCLUDING REAMED HOLES PER MIL-STD-10	
200 FOR ALL DRILLED HOLES	
REMOVE ALL BURRS. BREAK ALL EDGES .015-.031	
INSPECTION INFORMATION MINIMUM PERMISSIBLE AVERAGE EDGE DISTANCE MARKED IS 1.5 FASTENER DIA FROM FASTENER ℄	✓
SYMBOL √ DENOTES SURFACE TO BE MACHINED	
UNLESS OTHERWISE SPECIFIED TOLERANCE ON FLANGES IS ± 1/32	
LENGTHS OF AN, NAS & MS AL ALY RIVETS SHORTER THAN 1 INCH ARE NOT SPECIFIED.	
TOLERANCE ON LOFTED DELINEATIONS IS	

DWG SIZE 34 X 118

PRINTING INFO ONLY

FULL SIZE SHEET AREA (IN X 120)= 30 SQ. FT.
1/2 SIZE SHEET AREA (1/4 OF FULL)= 7.50 SQ. FT.

PRINT TRIM LINE

LDW280-52663D

LDW280-52663D

CODE IDENT NO. 26512
LDW280-52663 SH 3

GRUMMAN AIRCRAFT ENGRG CORP., BETHPAGE, L. I., NEW YORK

LM	SIZE J	CODE IDENT NO. 26512	LDW280-52663	D
MODEL OR END ITEM	SCALE FULL/NONE		SHEET 3.00	

3 FRAMES x

THIS IS AN ORIGINAL DWG

ENG 32.1 REV 3-65

GRUMMAN AIRCRAFT ENGINEERING CORP.
CODE IDENT NO. 26512
ENGINEERING ORDER

DWG. NO. LDW280-52663 EO NO. A1
CONTROL INFO NO. LDW280A0202

* DRAWING NOT MADE

CREATE -9 IDENT. TO LDW280-23663-17** EXC. LDW280-17538-35,-36,-37,-38,-39 &-40 (1EA) RESPECTIVELY REPLACE LDW280-17538-23,-24,-31,-32,-27&-28(1EA).

CREATE -7 IDENT. TO LDW280-23663-15** EXC. LDW280-17538 -41(3) & -42(4) RESPECTIVELY REPLACE LDW280-17538-29(3) &-30(4).

CREATE - 5 IDENT. TO LDW280-23663-13** EXC AT ℄ ONLY LDW280-17538-33(1) REPLACES LDW280-17538-22(1)

CREATE-3 IDENT TO LDW280-23663-11** EXC. -5,-7&-9(1EA.) RESPECTIVELY REPLACE LDW280-23663-13,-15 &-17(1 EA.)

CREATE-1 IDENT TO LDW280-23663-1** EXC. -3(1) REPLACES LDW280-23663-11(1)

-1 IS EFF ON LEM-2(32) THRU LEM-6(36), N/A LDW280-52662, (4) REQ/MOD.

** CONFIGURATION OF LDW280-23663-1,-11,-13,-15&-17 TO BE THRU THE "B REVISION.

DETAIL SPEC REQ		CL II ENGRG CHG		CL I ENGRG CHG	

REASON FOR EO: NEW PARTS PERMIT ASSY RIVETS TO BE SQUEEZED

DESCRIPTION OF EO: E.O. A1, INITIAL DRAWING RELEASE, PARTS MADE PER E.O.

GAEC EO RELEASE: FE 9/30/6 523

MODEL	EFFECTIVITY PROCURING ACTIVITY NO.	EFFECTIVITY GAEC UNIT NO.	EFFECTIVITY SUB CONTR UNIT NO.
LEM		LEM-2(32) THRU	
		LEM-6(36)	

DRAWING CHANGE REQD		DISPOSITION OF PARTS	
REVISE DWG	RECORD EO	REWORK	SCRAP
*		NOT REQ'D	

APPROVED BY					W/M		RMC (E)	
DATE	9/8/66	1554			9/14/66		9-29	9-26-66
✓	V.D.I.	~~SUPPORT~~	RELIAB. GROUP	GROUP LEADER	STRESS GROUP	LIAISON ENGRG	PROJ ENGRG	~~CONT~~

PRIORITY: C

DRAWING TITLE: PANEL ASS'Y. DES. STG.-REMOVEABLE BASE HEAT SHIELD

DRAWING NO.: LDW280-52663

EO NO.: A1

ISSUED BY R. WINK / J. STRAKOSCH X1153 SECTION VEH. DES. INT. GROUP NO. 335 CDR PL 35 9-16-66

01

NAS 9-1100

AG *

ENG 32.1 REV 3-65

GRUMMAN AIRCRAFT ENGINEERING CORP.
CODE IDENT NO. 26512
ENGINEERING ORDER

DWG. NO. LDW280-52663 EO NO. A2
CONTROL INFO NO. LM-2-2925

ON-1 : IN FIELD & B/M:

LDW280-17539-21,-23,-24,-25 &-26

REPLACE

LDW280-11,-15,-16,-17 &-18

DETAIL SPEC REQ	☐	CL II ENGRG CHG	☐	CL I ENGRG CHG	☐

REASON FOR EO: NEW PARTS CREATED TO PROVIDE FOR PROPER RIVETING ON ASSY

DESCRIPTION OF EO: ON-1: LDW280-17539-21,-23,-24,-25&-26 REPLACED LDW280-17539-11,-15,-16,-17,-18

GAEC EO RELEASE: LE

MODEL	PROCURING ACTIVITY NO.	GAEC UNIT NO.	SUB CONTR UNIT NO.
LM		LM-2 (32)	
LM		THRU	
LM		LM-6 (36)	

DRAWING CHANGE REQD: REVISE DWG	RECORD EO	DISPOSITION OF PARTS: REWORK	SCRAP
✓		✓	

APPROVED BY	JHS				PBS	CEF	RMC	
DATE	11/15				10-22-66	10/24/66	10-24-66	10-27-66
10-21-66	VDI	SUPPORT	RELIAB. GROUP	GROUP LEADER	STRESS GROUP	LIAISON ENGRG	PROJ ENGRG	GOVT

PRIORITY: C

DRAWING TITLE: PANEL ASSY. D.S.~REMOVEABLE BASE HEAT SHLD.

DRAWING NO.: LDW280-52663

EO NO.: A2

ISSUED BY LIAISON / E. NEFF X3604 SECTION V.D.I. GROUP NO. 335 PL 35

EMF

01 NAS 9-1100

01 NAS 9-1100

ENG 32.2 REV 3-65

GRUMMAN AIRCRAFT ENGINEERING CORP.
CODE IDENT NO. 26512
ENGINEERING ORDER

DWG. NO. LDW280-52663	EO NO. A3
CONTROL INFO NO. LM-2-3033	

REVISE F/D & B/M AS SHOWN BELOW:

LDW280-17526	-11	S/B	ON-9 ASSY	WAS	ON-1 INSTL.
	-13	S/B	"	WAS	"
	-15	S/B	"	WAS	"
	-17	S/B	"	WAS	"
	-19	S/B	"	WAS	"
LDW280-17539	-13	S/B	ON-5 ASSY	WAS	ON-1 INSTL.
	-14	S/B	ON-5 "	WAS	"
	-23	S/B	ON-7 "	WAS	"
	-24	S/B	ON-7 "	WAS	"
	-25	S/B	ON-9 "	WAS	"
	-26	S/B	ON-9 "	WAS	"
LDW280-17540	-19	S/B	ON-9 ASSY.	WAS	ON-3 ASSY.
	-21	S/B	" "	WAS	" "
	-17	S/B	" "	WAS	" "
LDW280M17515	-1	S/B	ON-9 ASSY.	WAS	ON-1 INSTL.
	-2	S/B	ON-9 "	WAS	ON-1 "
LDW280M17517	-1	S/B	ON-9 ASSY.	WAS	ON-1 INSTL.
	-3	S/B	ON-9 "	WAS	ON-1 "
LDW280M17550	-3	S/B	ON-9 ASSY.	WAS	ON-1 INSTL.
	-4	S/B	ON-9 "	WAS	ON-1 "
LDW280M17552	-1	S/B	ON-5 ASSY.	WAS	ON-1 INSTL.
	-2	S/B	ON-5 "	WAS	ON-1 "
LDW280M17553	-1	S/B	ON-5 ASSY.	WAS	ON-1 INSTL.
	-2	S/B	ON-5 "	WAS	ON-1 "
LDW280-17481	-11	S/B	ON-1 INSTL.	WAS	ON-3 ASSY.
LDW280-23663	-17	S/B	ON-1 INSTL.	WAS	ON-3 ASSY.
	-15	S/B	ON-1 "	WAS	ON-3 "
	-13	S/B	ON-1 "	WAS	ON-3 "
LDW280M17514	-1	S/B	ON-1 INSTL.	WAS	ON-3 ASSY.
	-2	S/B	ON-1 "	WAS	ON-3 "
LDW280M17513	-1	S/B	ON-1 INSTL.	WAS	ON-3 ASSY.

IN B/M & F/D ~ LDW280M17515-1,-2 S/B (ON-9) WAS (ON-1) LDW280M17517-1,-3 S/B (ON-9) WAS (ON-1) LDW280M17550-3,-4 S/B (ON-9) WAS (ON-1) LDW280M17552-1,-2 S/B (ON-5) WAS (ON-1) LDW280M17553-1,-2 S/B (ON-5) WAS (ON-1) LDW280-17481-11 S/B (ON-1) WAS (ON-3) LDW280-23663-13,-15,-17 S/B (ON-1) WAS (ON-3)

DETAIL SPEC REQ	☐	CL II ENGRG CHG	☐	CL I ENGRG CHG	☐

REASON FOR EO: MANUFACTURING REQUEST TO SIMPLIFY ASSY

DESCRIPTION OF EO: IN B/M & F/D: LDW280-17526-11-13,-15,-17,-19 S/B (ON-9) WAS (ON-1) LDW280-17539-13,-14 S/B (ON-5) WAS (ON-1). LDW280-17539-23,24 S/B (ON-7) WAS (ON-1) LDW280-17539-25-26 S/B (ON-9) WAS (ON-1) LDW280-17540-19-21-17 S/B (ON-9) WAS (ON-3)

GAEC EO RELEASE: R

MODEL	PROCURING ACTIVITY NO.	GAEC UNIT NO.	SUB CONTR UNIT NO.
LM		[illegible] (32)	
LM		[illegible]	
LM		M-6 (36)	

DRAWING CHANGE REQD		DISPOSITION OF PARTS		APPROVED BY								
		NOT REQ'D		DATE	1/25				12/5/66	12/3/66	12-6-66	11-5-66
REVISE DWG ✓	RECORD EO	REWORK	SCRAP	-3-	VD	SUPPORT	RELIAB. GROUP	GROUP LEADER	STRESS GROUP	LIAISON ENGRG	PROJ ENGRG	GOVT

PRIORITY	DRAWING TITLE	DRAWING NO.	EO NO.
C	PANEL ASSEMBLY AS.-REMOVABLE BASE HEAT SHIELD INS. SUPT.	LDW280-52663	A3

ISSUED BY [illegible] / E. NEFF 11-28-66 X3604 SECTION VP-[illegible] GROUP NO. [illegible] PL [illegible]

ENG 32.1 REV 3-65

GRUMMAN AIRCRAFT ENGINEERING CORP.
CODE IDENT NO. 26512

ENGINEERING ORDER EMF A

DWG. NO. LDW280-52663
EO NO. A4
CONTROL INFO NO. LDW280A4387

ADD LDW280P18133-11(3) ON -1 AS SHOWN IN ZONE C9 & C10:

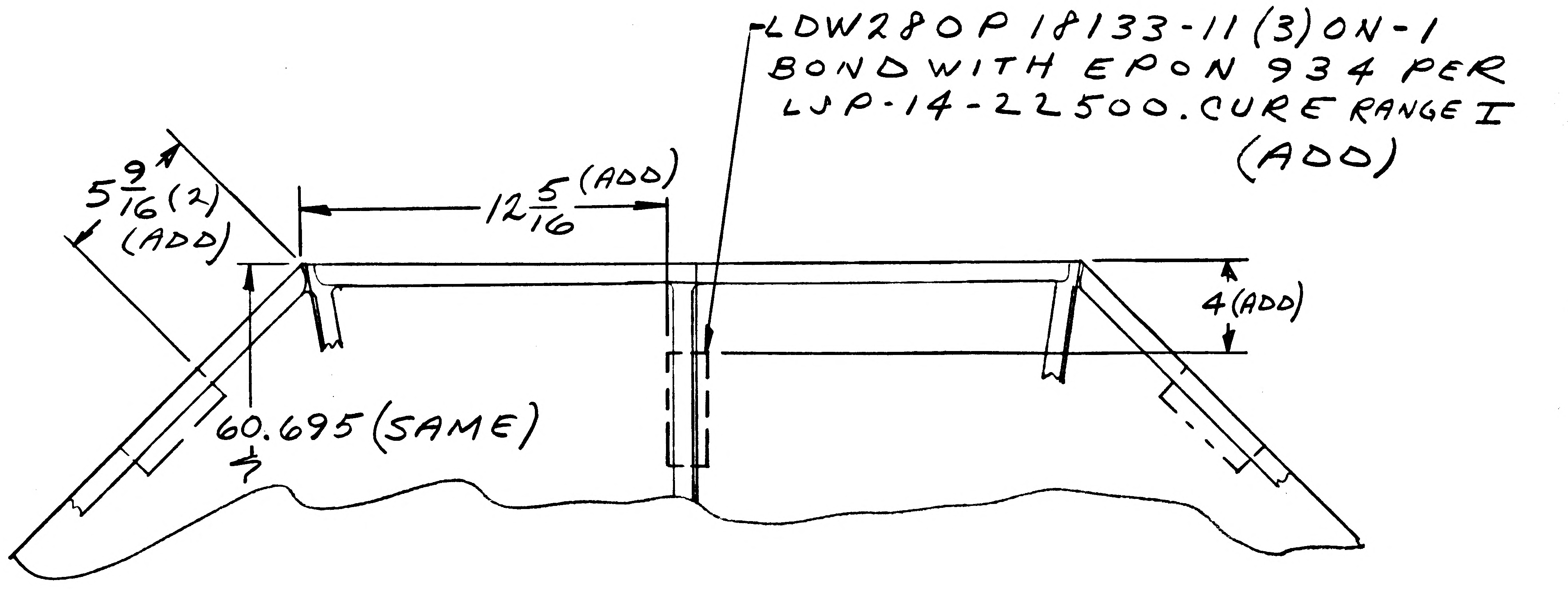
LDW280P18133-11(3) ON-1 BOND WITH EPON 934 PER LJP-14-22500. CURE RANGE I (ADD)

2

DETAIL SPEC REQ		CL II ENGRG CHG		CL I ENGRG CHG	

REASON FOR EO: STRIKER PLATE REQD FOR LANDING GEAR TENSION STRAP

DESCRIPTION OF EO: ADDED LDW280P18133-11 (3) ON-1

GAEC EO RELEASE: Ⓡ 4 — 12/15

MODEL	EFFECTIVITY: PROCURING ACTIVITY NO.	GAEC UNIT NO.	SUB CONTR UNIT NO.
LM		LM-2 (32) THRU LM-15 (45)	

DRAWING CHANGE REQD: REVISE DWG	RECORD EO	DISPOSITION OF PARTS: REWORK	SCRAP
✓		✓	

APPROVED BY	JAS				WJH			
DATE	12/14/66				12/15/66		12-15-66	12-15-66
5	VO I	SUPPORT	RELIAB. GROUP	~~GROUP~~ LEADER	STRESS GROUP	LIAISON ENGRG	PROJ ENGRG	~~GOVT~~

PRIORITY: C
DRAWING TITLE: PANEL ASSY - D/S, REMOVEABLE BASE HEAT SHIELD INSULATION SUPPORT
DRAWING NO.: LDW280-52663
EO NO.: A4

ISSUED BY E. ROESSLER 12/13/66 X1153 SECTION VEH DES GROUP NO. 335 PL 35

01 NAS 9-1100

A.G.
ENG 32.1 REV 3-65

GRUMMAN AIRCRAFT ENGINEERING CORP.
CODE IDENT NO. 26512
ENGINEERING ORDER EMF-A

DWG. NO. LDW280-52663		EO NO. B1
CONTROL INFO NO. LM-2-3173		

IN MODEL BLOCK FOR -1
ADD LM-7(37) THRU LM-15(45) EFFECTIVITY
(SAME NEXT ASSY & QTY AS LM-6(36)

2

DETAIL SPEC REQ		CL II ENGRG CHG		CL I ENGRG CHG	

REASON FOR EO	DESCRIPTION OF EO	GAEC EO RELEASE
ADDITIONAL EFFECTIVITY REQD	IN MOD/BLK FOR -1 ADDED LM-7(37) THRU LM-15(45) EFFECTIVITY	6

MODEL	EFFECTIVITY		
	PROCURING ACTIVITY NO.	GAEC UNIT NO.	SUB CONTR UNIT NO.
LM		LM-7(37)	
		THRU	
		LM-15(45)	

DRAWING CHANGE REQD		DISPOSITION OF PARTS	
✓		NOT	REQD
REVISE DWG	RECORD EO	REWORK	SCRAP

APPROVED BY					caw	caw		
DATE					1/6/67	1/6/67	1967	
-6-	VDI	SUPPORT	RELIAB. GROUP	GROUP LEADER	STRESS GROUP	LIAISON ENGRG	PROJ ENGRG	~~DCT~~

PRIORITY	DRAWING TITLE	DRAWING NO.	EO NO.
C	PANEL ASSY ~ D/S ~ REMOVEABLE BASE HEAT SHIELD INSULATION	LDW280-52663	B1

ISSUED BY LIAISON J. MALONEY 1/6/67 X3604 SECTION V.D.I. GROUP NO. 335 PL 35

01 NAS 9-1100

NG 32.2 REV 3-65

GRUMMAN AIRCRAFT ENGINEERING CORP.
CODE IDENT NO. 26512
ENGINEERING ORDER

DWG. NO.	LDW280-52663	EO NO.	BV
CONTROL INFO NO.	LDW280A5319		

ON BOTH SIDES OF ℄ SYM., TRIM -1 AS SHN BELOW, CREATING (-1-1) ASS'Y
OTHERWISE IDENT. TO -1. IN M/B (-1-1) REPLACES -1 EFF LM-3 THRU LM-15 (SAME QUAN. & NEXT ASS'Y)

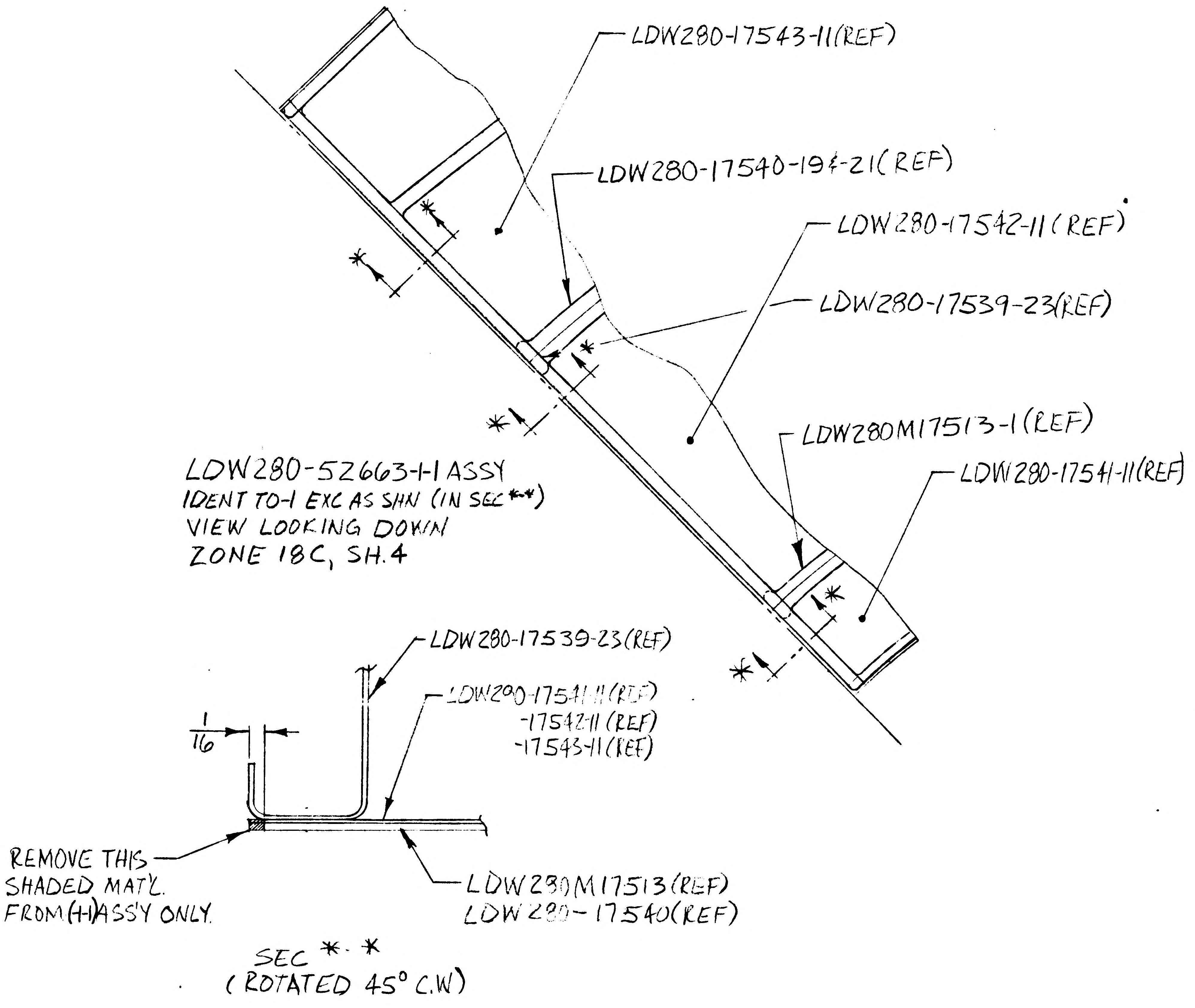
LDW280-17543-11(REF)
LDW280-17540-19&-21(REF)
LDW280-17542-11(REF)
LDW280-17539-23(REF)
LDW280M17513-1(REF)
LDW280-17541-11(REF)
*
*
*

LDW280-52663-1-1 ASSY
IDENT TO -1 EXC AS SHN (IN SEC *-*)
VIEW LOOKING DOWN
ZONE 18C, SH.4

LDW280-17539-23(REF)
LDW280-17541-11(REF)
-17542-11(REF)
-17543-11(REF)
1/16
REMOVE THIS SHADED MAT'L FROM (-1-1) ASS'Y ONLY.
LDW280M17513(REF)
LDW280-17540(REF)

SEC *-*
(ROTATED 45° C.W.)

01 NAS 9-1100

* = NEXT AVAILABLE SECTION LTR

3

DETAIL SPEC REQ		CL II ENGRG CHG		CL I ENGRG CHG												
REASON FOR EO				DESCRIPTION OF EO												GAEC C EO RELEASE
ELIMINATE POSSIBLE PANEL SKIN INTERFERENCE DUE TO TOLERANCE BUILD UP				ADDED (-1-1) REPLACING -1. ADDED SEC *-*												① 2/14/7
MODEL	EFFECTIVITY			DRAWING CHANGE REQD		DISPOSITION OF PARTS		APPROVED BY								
	PROCURING ACTIVITY NO.	GAEC UNIT NO.	SUB CONTR UNIT NO.					DATE	1/30/67			1/3/67	1/3/67		1/31/67	2-13-67
LM		LM-3(33) THRU		✓ REVISE DWG	RECORD EO	✓ REWORK	SCRAP	/	V.D.I.	SUPPORT	RELIAB. GROUP	GROUP LEADER	STRESS GROUP	LIAISON ENGRG	PROJ ENGRG	GOVT
		LM-15(45)		PRIORITY	DRAWING TITLE							DRAWING NO.				EO NO.
				C	PANEL ASSY~DES.STG.~BASE HEAT SHLD							LDW280-52663				BV

ISSUED BY E. WINK/J. STRAKOSCH SECTION VEH. DES. INT. GROUP NO. 335 PL 35

B

NG 32.2 REV 3-65

GRUMMAN AIRCRAFT ENGINEERING CORP.
CODE IDENT NO. 26512
ENGINEERING ORDER CMR-A

DWG. NO. LDW280-52663		EO NO. B3
CONTROL INFO NO. LDW280A5453		

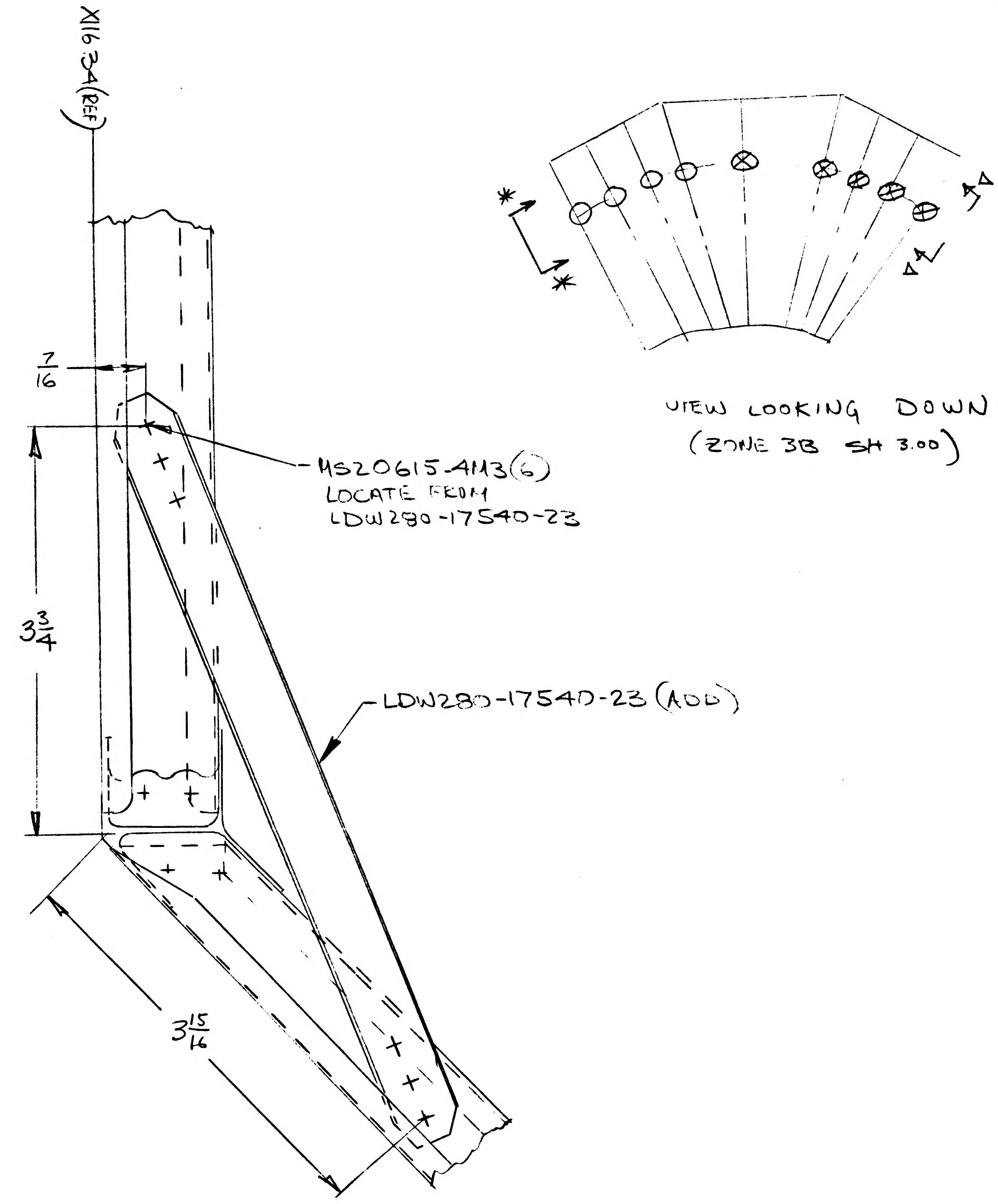

X116.34 (REF)
7/16
3 3/4
3 15/16
MS20615-4M3(6)
LOCATE FROM
LDW280-17540-23
LDW280-17540-23 (ADD)
VIEW LOOKING DOWN
(ZONE 3B SH 3.00)
*
*
Δ
Δ

SECTION *-* SHN (4 PLCS) REF EO E1
Δ-Δ OPP (5 PLCS) REF EO E1

ON -1 & -1-1 ADD LDW280-17540-23

2

DETAIL SPEC REQ		CL II ENGRG CHG		CL I ENGRG CHG		LCR 960							
REASON FOR EO ADD'L STRENGTH REQD LCR 960				DESCRIPTION OF EO ON-1 & -1-1 ADDED LDW280-17540-23(9), MS20615-4M3(54)								GAEC EO RELEASE C VE 2/14/67	
MODEL	EFFECTIVITY			DRAWING CHANGE REQD		DISPOSITION OF PARTS		APPROVED BY				—	NM
	PROCURING ACTIVITY NO.	GAEC UNIT NO.	SUB CONTR UNIT NO.	✓		✓		DATE	2/10/67			—	2-10-67
LM		LM-2(32) THRU LM-15(4)		REVISE DWG	RECORD EO	REWORK	SCRAP	5	VDI	SUPPORT	RELIAB. GROUP	GROUP LEADER	STRESS GROUP
				PRIORITY C	DRAWING TITLE SHIELD ASSY					DRAWING NO. LDW280-52663			

LIAISON ENGRG	PROJ ENGRG 2/14/67	2/14/67
		EO NO. B3

ISSUED BY G BARNES / T STARKOSCH X1392 SECTION VDI GROUP NO. 335 PL 35

01

NAS 9-1100

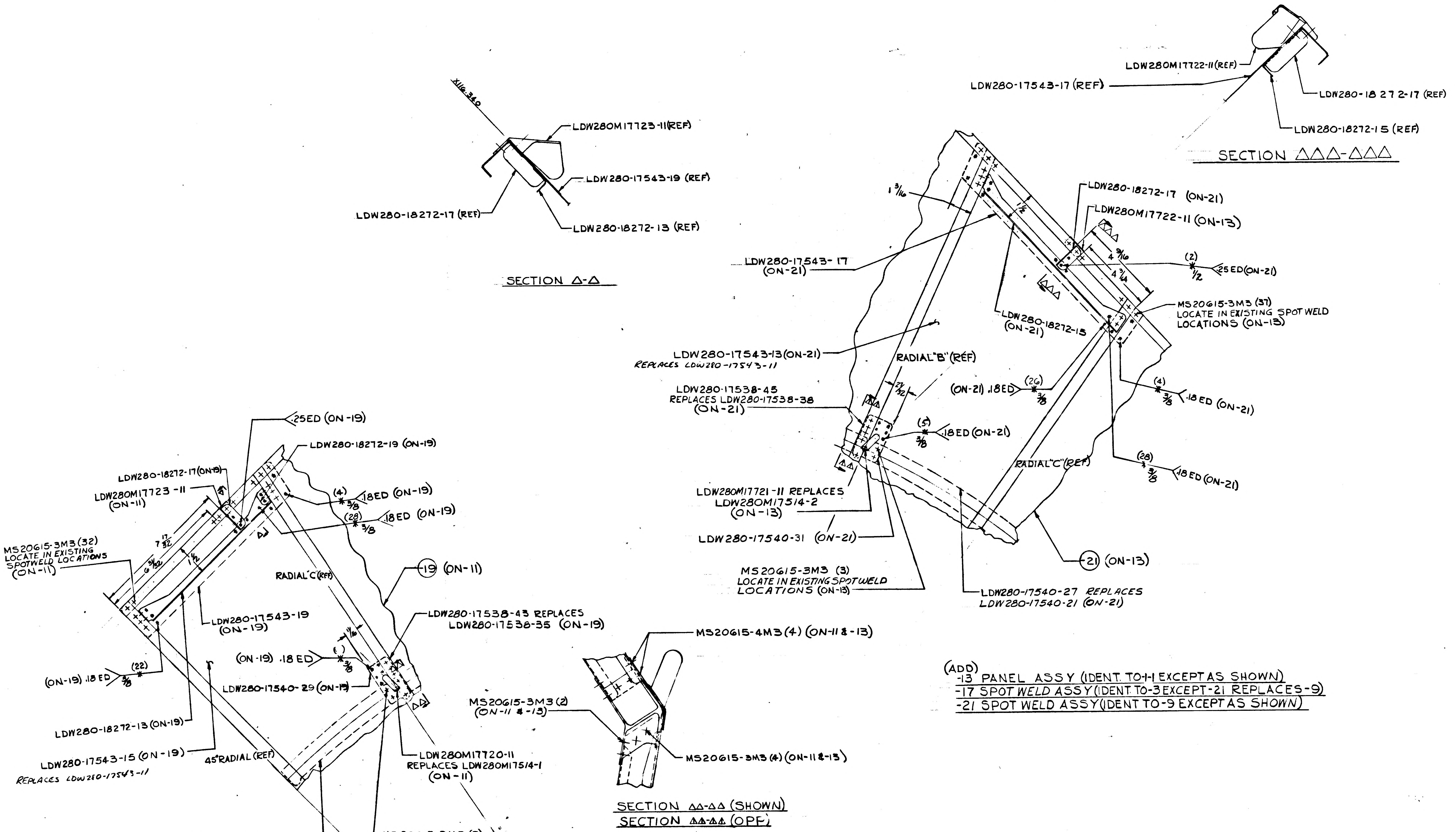
X116.340
LDW280M17723-11(REF)
LDW280-17543-19 (REF)
LDW280-18272-17 (REF)
LDW280-18272-13 (REF)
LDW280M17722-11(REF)
LDW280-17543-17 (REF)
LDW280-18 27 2-17 (REF)
LDW280-18272-15 (REF)
1 3/16
LDW280-18272-17 (ON-21)
LDW280M17722-11 (ON-13)
4 9/16
4 3/64
1/2
(2)
1/2
.25ED(ON-21)
LDW280-17543- 17
(ON-21)
LDW280-18272-15
(ON-21)
MS20615-3M3 (37)
LOCATE IN EXISTING SPOT WELD
LOCATIONS (ON-13)
LDW280-17543-13(ON-21)
REPLACES LDW280-17543-11
RADIAL "B" (REF)
LDW280-17538-45
REPLACES LDW280-17538-38
(ON-21)
21/32
(ON-21) .18ED
(26)
3/8
(4)
3/8
.18 ED (ON-21)
(5)
3/8
.18ED (ON-21)
RADIAL "C" (REF)
(28)
3/8
.18 ED (ON-21)
LDW280M17721-11 REPLACES
LDW280M17514-2
(ON-13)
LDW280-17540-31 (ON-21)
MS20615-3M3 (3)
LOCATE IN EXISTING SPOTWELD
LOCATIONS (ON-13)
LDW280-17540-27 REPLACES
LDW280-17540-21 (ON-21)
21 (ON-13)
.25ED (ON-19)
LDW280-18272-19 (ON-19)
LDW280-18272-17(ON-19)
LDW280M17723 -11
(ON-11)
(4)
3/8
.18ED (ON-19)
(28)
3/8
.18ED (ON-19)
7 17/32
6 31/32
1 1/2
MS20615-3M3 (32)
LOCATE IN EXISTING
SPOTWELD LOCATIONS
(ON-11)
RADIAL "C" (REF)
-19 (ON-11)
LDW280-17543-19
(ON-19)
LDW280-17538-43 REPLACES
LDW280-17538-35 (ON-19)
1/16
(ON-19) .18 ED
( )
3/8
(ON-19) .18 ED
(22)
3/8
LDW280-17540-29 (ON-19)
LDW280-18272-13 (ON-19)
LDW280-17543-15 (ON-19)
REPLACES LDW280-17543-11
45° RADIAL (REF)
LDW280M17720-11
REPLACES LDW280M17514-1
(ON-11)
LDW280-17540-25
REPLACES LDW280-17540-19(ON-19)
MS20615-3M3 (3)
LOCATE IN EXISTING SPOT WELD
LOCATIONS (ON-11)
MS20615-4M3(4) (ON-11 & -13)
MS20615-3M3 (2)
(ON-11 & -13)
MS20615-3M3 (4) (ON-11 & -13)

SECTION △-△

SECTION △△△-△△△

SECTION △△-△△ (SHOWN)
SECTION △△-△△ (OPP)

(ADD)
-13 PANEL ASSY (IDENT TO-1-1 EXCEPT AS SHOWN)
-17 SPOT WELD ASSY (IDENT TO-3 EXCEPT -21 REPLACES -9)
-21 SPOT WELD ASSY (IDENT TO-9 EXCEPT AS SHOWN)

(ADD)
-11 PANEL ASSY (IDENT TO-1-1 EXCEPT AS SHOWN
-15 SPOTWELD ASSY (IDENT TO-3 EXCEPT -19 REPLACES -9)
-19 SPOTWELD ASSY (IDENT TO-9 EXCEPT AS SHOWN)

FOR -11 & -13 N/A LDW280-25662 1EA REQ/MOD.
EFF LM-2 THRU LM-15

FOR -1 N/A LDW280-25662 2 REQ/MOD WAS 4 REQ/MO

FOR -1-1 N/A LDW280-25662 2 REQ/MOD WAS 4 REQ/MO

⌖ -11 & -13 MAY BE MADE BY REWORKING A -1-1 FOR EACH ONE
△ NEXT AVAILABLE SECTION LTR

A

DETAIL SPEC REQD ☐ CLASS II ENGRG CHG ☐ CLASS I ENGRG CHG ☐ 1 LCR -809
CONTROL INFO NO. DN280A5515

REASON FOR EO
ADDITION OF LANDING RADAR REFLECTOR
LCR 809

DESCRIPTION OF EO
ADDED -11 & -13, -15, -17, -19, -21
FOR -1 2 REQ/MOD WAS 4 REQ/MOD
FOR -1-1 2 REQ/MOD WAS 4 REQ/MOD

GRUMMAN EO RELEASE

MODEL	PROCURING ACT. NO.	GAEC UNIT NO.	SUB CONTR UNIT NO.
		EFFECTIVITY	
LM		LM-2 (32) THRU LM-15 (45)	

DRAWING REVISION REQD: ✓ REVISE DWG / RECORD EO
DISPOSITION OF PARTS: ⌖ REWORK / SCRAP

BY	Jar			JRS	NJ		Sam	JJ
DATE	3/18/67			3/18/67	3/24/67		3/27/67	3/2
5	VDI	SUPPORT	RELIAB GROUP	GROUP LEADER	STRESS GROUP	LIAISON ENGRG	PROJ ENGR	

PRIORITY: C

DRAWING TITLE
PANEL ASSEMBLY
DESCENT STAGE-REMOVABLE BASE
HEAT SHIELD INSULATION SUPPORT

ENGINEERING ORDER
DRAWING NO. LDW280-52663
EO NO. B4

ISSUED BY R. CLARK/J STRAKOSCH SECTION VDI GROUP NO. 335 PL 25
CODE IDENT NO. 26512
GRUMMAN AIRCRAFT ENGINEERING CORP
BETHPAGE, L. I., N. Y.

ENG 38.3 REV 3-66

01
NAS 9-1100

ENG 32.2 REV 3-65

GRUMMAN AIRCRAFT ENGINEERING CORP.
CODE IDENT NO. 26512
ENGINEERING ORDER

DWG. NO. LEO280
EO NO. 539
CONTROL INFO NO. LDW280A-6137

FOR ALL DASH NO.* ON THE FOLLOWING DWGS WHICH HAVE LM-6 EFF ADD LTA-3D|R EFF QTY & N/A TO REMAIN THE SAME AS ON LM-6

DRAWING *	TITLE	CHANGE NO.
LDW280-23521	SEE DWG	B7
-23522		C1
-23523		B7
-23529		B4
-23530		B6
-23532		C5
-23535		B3
-23538		B3
-23539		D3
-23540		C6
-23541		D2
-23542		A10
-23543		B7
-23544		C1
-23550		D2
-23563		B2
-23565		A4
-23569		B4
-23573		B4
-23575		C3
-23576		C3
-23577		B1
-23578		B5
-23579		C1
-23580		A9
-23581		C2
-23586		B6
-23634		B2
-23637		A7
-52520		B10
-52663		B5
-52683		A2
-54510		C4
-54516		B5
-54524		D2
-54525		C5
-54526		C3
-54527		C6
-54528		C3
-54531		D8
-54533		C5
-54534		P7
-54537		D1
-54570		C2
LDW280-54682	SEE DWG	D6

DETAIL SPEC REQ ☐ CL II ENGRG CHG ☑ CL I ENGRG CHG ☐ LCD13-1242 2

REASON FOR EO: FAILURE OF LTA-3D IN STATIC TEST

DESCRIPTION OF EO: IN MODEL BLOCK FOR* ADDED LTA-3DR EFF

GAEC EO RELEASE: C JK 4/3/67

MODEL	PROCURING ACTIVITY NO.	GAEC UNIT NO.	SUB CONTR UNIT NO.
LM		LTA-3D/R	(46)

DRAWING CHANGE REQD: REVISE DWG ✓ RECORD EO

DISPOSITION OF PARTS: REWORK NOT REQD; SCRAP

APPROVED BY: DATE 3/28/67 5 YDI

SUPPORT; RELIAB. GROUP; GROUP LEADER 3/28/67; STRESS GROUP; LIAISON ENGRG; PROJ ENGRG 3-30-67

PRIORITY: C

DRAWING TITLE: NOTED

DRAWING NO.: LEO280

EO NO.: 539

ISSUED BY G. BARNES / J. STRAKOS XIII3 SECTION YDI GROUP NO. 335 PL 25

01

NAS 9-1100

B P8

ENG 32.2 REV 3-65

GRUMMAN AIRCRAFT ENGINEERING CORP.
CODE IDENT NO. 26512
ENGINEERING ORDER

DWG. NO.	LDW280-52663	EO NO.	B6
CONTROL INFO NO.	LM-2-3475		

REVISE FLD/DWG AS SHOWN BELOW

LDW280-17526-17	S/B	ON -9,-19 & -21	WAS	ON -1,-1-1,-11 & -13
LDW280-17539-13	S/B	ON -5 ASSY	WAS	ON -1,-1-1,-11 & -13
-14	↕	↕ -5 ASSY	↕	↕ -1,-1-1,-11 & -13
-24	↕	↕ -7 ASSY	↕	↕ -1,-1-1,-11 & -13
LDW280-17539-25	S/B	ON -9,-19 & -21	WAS	ON -1,-1-1,-11 & -13
LDW280-17540-17	S/B	ON -9,-19 & -21	WAS	ON -3,-15 & -17
LDW280M17515-1	S/B	ON -9,-19 & -21	WAS	ON -1,-1-1,-11 & -13
LDW280M17515-2	S/B	ON -9,-19 & -21	WAS	ON -1,-1-1,-11 & -13
LDW280M17517-1	S/B	ON -9,-19 & -21	WAS	ON -1,-1-1,-11 & -13
LDW280M17517-3	S/B	ON -9,-19 & -21	WAS	ON -1,-1-1,-11 & -13
LDW280M17513-1	S/B	ON -1,-1-1,-11 & -13	WAS	ON -7 ASSY

REVISE B/M AS SHOWN BELOW

LDW280-17526-17	S/B	ON -9,-19 & -21	WAS	ON -1,-1-1,-11 & -13
LDW280-17526-19	S/B	ON -9,-19 & -21	WAS	ON -1,-1-1,-11 & -13
LDW280-17539-13	S/B	ON -5 ASSY	WAS	ON -1,-1-1,-11 & -13
-14	↕	↕ -5	↕	↕ -1,-1-1,-11 & -13
-23	↕	↕ -7	↕	↕ -1,-1-1,-11 & -13
-24	↕	↕ -7 ASSY	↕	↕ -1,-1-1,-11 & -13
-25	↕	↕ -9,-19 & -21	↕	↕ -1,-1-1,-11 & -13
LDW280-17539-26	S/B	ON -9,-19 & -21	WAS	ON -1,-1-1,-11 & -13
LDW280M17515-1	S/B	ON -9,-19 & -21	WAS	ON -1,-1-1,-11 & -13
LDW280M17515-2	S/B	ON -9,-19 & -21	WAS	ON -1,-1-1,-11 & -13
LDW280M17517-1	S/B	ON -9,-19 & -21	WAS	ON -1,-1-1,-11 & -13
LDW280M17517-3	S/B	ON -9,-19 & -21	WAS	ON -1,-1-1,-11 & -13
LDW280M17552-1	S/B	ON -5 ASSY	WAS	ON -1,-1-1,-11 & -13
LDW280M17552-2	S/B	ON -5 ASSY	WAS	ON -1,-1-1,-11 & -13
LDW280M17553-1	S/B	ON -5 ASSY	WAS	ON -1,-1-1,-11 & -13
LDW280M17553-2	S/B	ON -5 ASSY	WAS	ON -1,-1-1,-11 & -13
LDW280-17481-11	S/B	ON -1,-1-1,-11 & -13	WAS	ON -3,-15 & -17
LDW280M17513-1	S/B	ON -1,-1-1,-11 & -13	WAS	ON -7 ASSY

DESCRIPTION OF EO (CONTINUED)
LDW280M17552-1 & -2, LDW280M17553-1 & -2 WERE ON -1,-1-1,-11 & -13.
LDW280-17481-11 WAS ON -3,-15 & -17.

2

DETAIL SPEC REQ	☐	CL II ENGRG CHG	☑	CL I ENGRG CHG	☐

REASON FOR EO
EO-A3 INCORRECTLY INCORPORATED. (MANUFACTURING REQUEST TO SIMPLIFY ASSEMBLY)

DESCRIPTION OF EO
IN FLD & B/M, LDW280-17526-17; LDW280-17539-13,-14,-24 & -25; LDW280M17515-1 & -2; LDW280M17517-1 & -3 WERE ON -1,-1-1,-11 & -13. LDW280M17513-1 WAS ON -7. IN FLD LDW280-17540-17 WAS ON -3,-15 & -17 IN B/M, LDW280-17526-19, LDW280-17539-23 & -26, (CONT'D ABOVE)

GAEC EO RELEASE: C
JK
03131

MODEL	PROCURING ACTIVITY NO.	GAEC UNIT NO.	SUB CONTR UNIT NO.
LM		LM-2(32)	LTA-3DR(46)
		THRU	
		LM-15(45)	

DRAWING CHANGE REQD: REVISE DWG	RECORD EO	DISPOSITION OF PARTS: REWORK	SCRAP
✓		✓	

	APPROVED BY	DATE
-3-	[illegible]	4/6/67
VDI		
SUPPORT		
RELIAB. GROUP		
GROUP LEADER	~	~
STRESS GROUP	[illegible]	4/11/67
LIAISON ENGRG	[illegible]	4/10/67
PROJ ENGRG	RHC	4.13.67
~~GOVT~~	[illegible]	4/11/67

PRIORITY: C
DRAWING TITLE: PANEL ASSEMBLY~DESCENT STAGE REMOVABLE BASE HEAT SHIELD SUPT
DRAWING NO.: LDW280-52663
EO NO.: B6

ISSUED BY LIAISON J. MALONEY 4/7/67 X3604 SECTION V.D.I. GROUP NO. 335 PL 25

01
NAS 9-1100

ENG 32.1 REV 3-65

C

GRUMMAN AIRCRAFT ENGINEERING CORP.
CODE IDENT NO. 26512
ENGINEERING ORDER

DWG. NO. LEO 280
EO NO. 566
CONTROL INFO NO. LDW280A6327

PARTIAL CANCELLATION ONLY.

THIS LEO CANCELS CHANGES LISTED ON LEO 539 FOR THE FOLLOWING DWGS.

– REMOVE THE FOLLOWING FROM FIELD OF LEO

	REVISED CHANGE	DRAWING NO.	REVISING CHANGE
✓	B5	LDW 280-52663	B7
	C2	LDW 280-23581	C4

DETAIL SPEC REQ	☐	CL II ENGRG CHG	☑	CL I ENGRG CHG	☐	LCD19-1242 2

REASON FOR EO: FAILURE OF LTA-3 IN STATIC TEST

DESCRIPTION OF EO: CANCELS NOTED CHANGE ON LEO 280-539

(R) GAEC EO RELEASE: JK 4/27 C

MODEL	EFFECTIVITY: PROCURING ACTIVITY NO.	GAEC UNIT NO.	SUB CONTR UNIT NO.
LM	-	LTA-3D/R (46)	

DRAWING CHANGE REQD: REVISE DWG ✓ · RECORD EO

DISPOSITION OF PARTS: REWORK NOT · SCRAP READ

APPROVED BY								
DATE	4/14/67			4/14/67	4/17/67		4/11/67	4/18/67
5	YDI	SUPPORT	RELIAB. GROUP	GROUP LEADER	STRESS GROUP	LIAISON ENGRG	PROJ ENGRG	

PRIORITY	DRAWING TITLE	DRAWING NO.	EO NO.
C	SEE DWGS	LEO 280	566

ISSUED BY G. BARNES/J. STRAKOSCH X1153 SECTION YDI GROUP NO. 335 PL 25

01 NAS 9-1100

B

ENG 32.1 REV 3-65

GRUMMAN AIRCRAFT ENGINEERING CORP.

CODE IDENT NO. 26512

ENGINEERING ORDER

DWG. NO. LDW280-52663		EO NO. B8
CONTROL INFO NO. LM-2-3501		

IN FLD & B/M, FOR -1, ADD MS20427M3-8 (12) AS SHOWN & REVISE NOTE 6
12 1/4 WAS 12 5/16

REVISE NOTE 6
BOND WITH EC2216 ---
WAS
BOND WITH EPON 934 ---

SHOP NOTE:-
RIVETS THAT BREAK THRU EXISTING SPOTWELDS ARE ACCEPTABLE ON ASSY

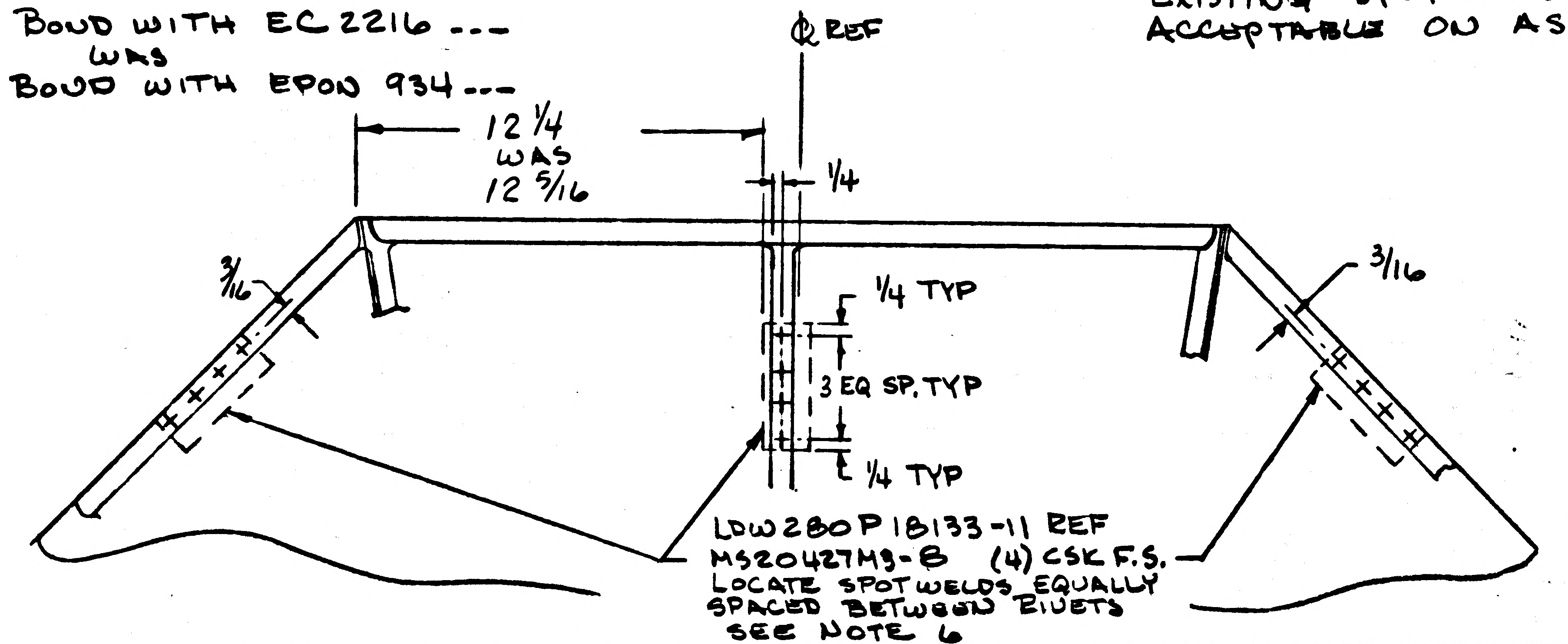

LDW280P18133-11 REF
MS20427M3-8 (4) CSK F.S.
LOCATE SPOTWELDS EQUALLY SPACED BETWEEN RIVETS
SEE NOTE 6

DETAIL SPEC REQ	☐	CL II ENGRG CHG	☑	CL I ENGRG CHG	☐	2

REASON FOR EO	DESCRIPTION OF EO	GAEC EO RELEASE
TO PROVIDE POSITIVE ATTACHMENT OF NYLON PLATES TO STRUCTURE	IN FLD & B/M ADDED MS20427M3-8(12) & REVISED NOTE 6 BOND WITH EC2216---, WAS BOND WITH EPON 934---, 12 1/4 WAS 12 5/16	JK C 02

MODEL	PROCURING ACTIVITY NO.	GAEC UNIT NO.	SUB CONTR UNIT NO.
LM		LM-2(32) thru LM-15(45)	

DRAWING CHANGE REQD		DISPOSITION OF PARTS		APPROVED BY								
✓		✓		DATE	7/6/67			~	4/20/67	4/20/67	7/6/67	4/20/67
REVISE DWG	RECORD EO	REWORK	SCRAP	-1-	VIII	SUPPORT	RELIAB. GROUP	GROUP LEADER	STRESS GROUP	LIAISON ENGRG	PROJ ENGRG	

PRIORITY	DRAWING TITLE	DRAWING NO.	EO NO.
C	PANEL ASSY - D/S, REMOVABLE BASE HEAT SHIELD INSULATION SUPT	LDW280-52663	B8

ISSUED BY LIAISON C. Farley X3604 SECTION V.D.I. GROUP NO. 335 PL 35

P1 B

ENG 32.1 REV 3-65

GRUMMAN AIRCRAFT ENGINEERING CORP.
CODE IDENT NO. 26512
ENGINEERING ORDER EMF-A

DWG. NO.	LDW280-52663	EO NO.	B9
CONTROL INFO NO.	LM-2-3542		

THIS IS A REVISION OF EO-B8

"FOR -1" SHOULD BE "FOR -1, -1-1, -11 & -13"

DETAIL SPEC REQ	☐	CL II ENGRG CHG	☑	CL I ENGRG CHG	☐

2

REASON FOR EO: PROVIDE POSITIVE ATTACHMENT OF NYLON PLATES TO STRUCTURE INCOMPLETE PART NO. CALLOUT

DESCRIPTION OF EO: REFERENCE EO-B8 "FOR -1," SHOULD BE "FOR -1, -1-1, -11 & -13"

GAEC EO RELEASE: JL C

02925

MODEL	PROCURING ACTIVITY NO.	GAEC UNIT NO.	SUB CONTR UNIT NO.
LM		LM-2 (32)	
		THRU	
		LM-15 (45)	

DRAWING CHANGE REQD		DISPOSITION OF PARTS	
REVISE DWG	RECORD EO	REWORK	SCRAP
✓		✓	

	-1-	SUPPORT	RELIAB. GROUP	GROUP LEADER	STRESS GROUP	LIAISON ENGRG	PROJ ENGRG	GOVT
APPROVED BY				~			DAM	
DATE	7/6/67			~	5/1/67	5/1/67	5-4-67	5-1-67
	VDI							

PRIORITY	DRAWING TITLE	DRAWING NO.	EO NO.
C	PANEL ASSY ~ D/S ~ REMOVABLE BASE HEAT SHIELD INSULATION	LDW280-52663	B9

ISSUED BY LIAISON J. MALONEY 4/28/67 x3604 SECTION V.D.I. GROUP NO. 335 PL 25

01 NAS 9-1100

B my

ENG 32.2 REV 3-65

GRUMMAN AIRCRAFT ENGINEERING CORP.
CODE IDENT NO. 26512 *
ENGINEERING ORDER

DWG. NO. LDW280-52663		EO NO.	B10
CONTROL INFO NO.	LM-2-3702		

THIS IS A REVISION OF E.O. B4

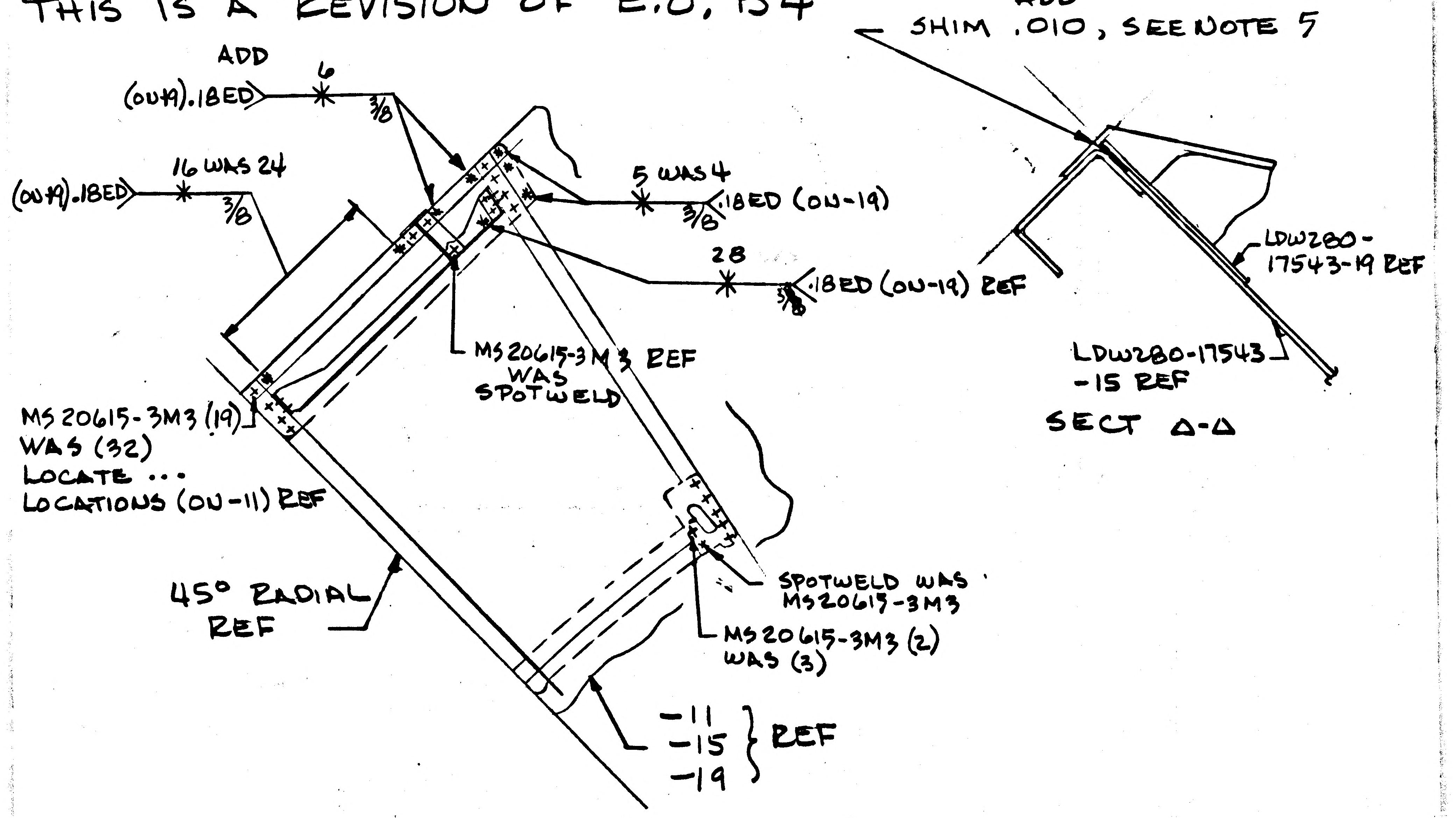

ADD
(ON-19).18ED
6
3/8
(ON-19).18ED
16 WAS 24
3/8
5 WAS 4
3/8
.18ED (ON-19)
28
3/8
.18ED (ON-19) REF
MS20615-3M3 REF
WAS
SPOTWELD
MS20615-3M3 (19)
WAS (32)
LOCATE ...
LOCATIONS (ON-11) REF
45° RADIAL
REF
SPOTWELD WAS
MS20615-3M3
MS20615-3M3 (2)
WAS (3)
-11
-15
-19
} REF
ADD
SHIM .010, SEE NOTE 5
LDW280-
17543-19 REF
LDW280-17543
-15 REF
SECT Δ-Δ

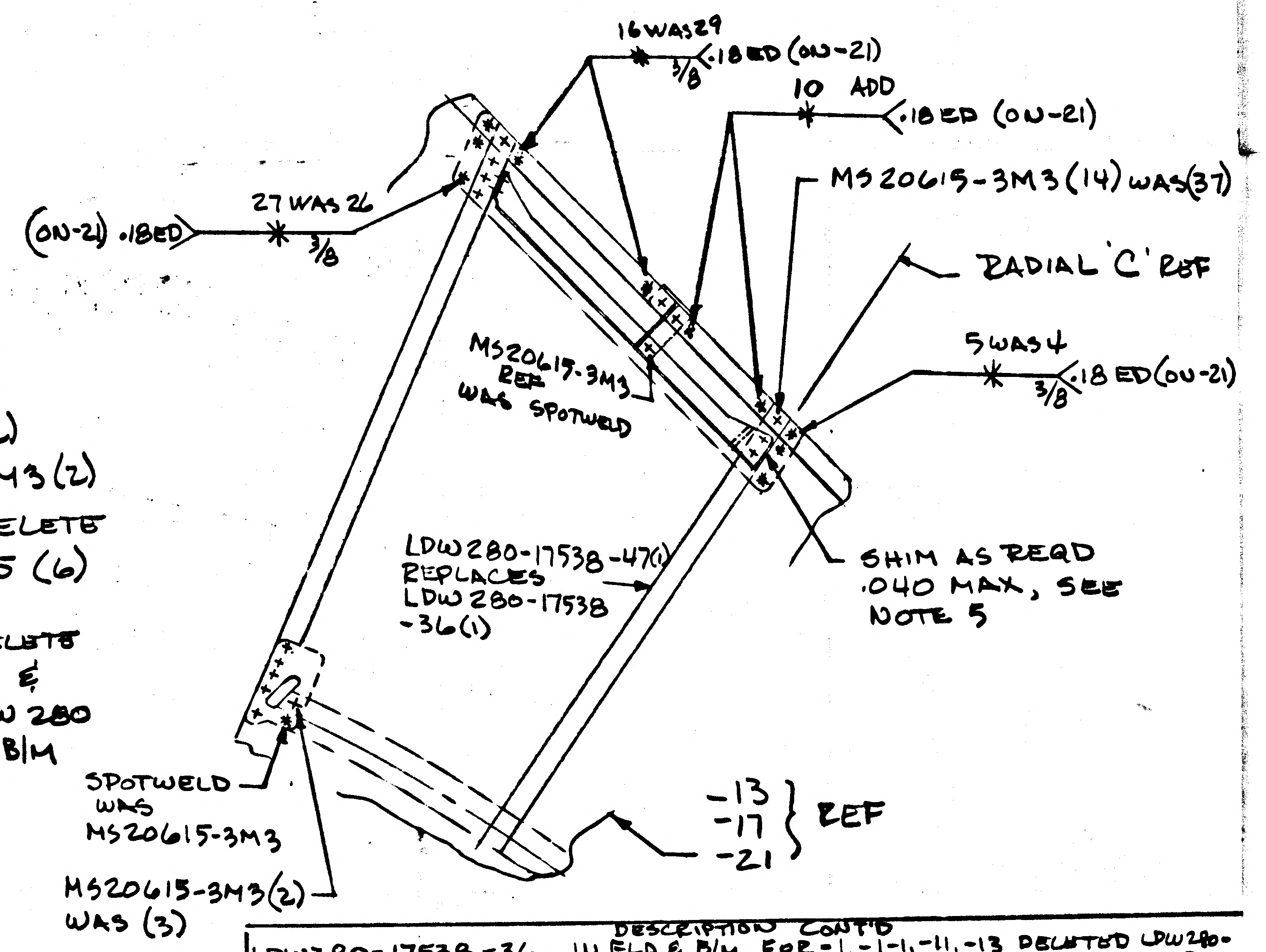

16 WAS 29
3/8
.18ED (ON-21)
10 ADD
.18ED (ON-21)
MS20615-3M3 (14) WAS (37)
RADIAL 'C' REF
(ON-21) .18ED
27 WAS 26
3/8
5 WAS 4
3/8
.18 ED (ON-21)
MS20615-3M3
REF
WAS SPOTWELD
LDW280-17538-47(1)
REPLACES
LDW280-17538
-36(1)
SHIM AS REQD
.040 MAX, SEE
NOTE 5
SPOTWELD
WAS
MS20615-3M3
MS20615-3M3 (2)
WAS (3)
-13
-17
-21
} REF

IN SECT ΔΔ-ΔΔ
ΔΔ-ΔΔ
MS20615-4M3(2)
WAS MS20615-3M3(2)
ON-1, -1-1, -11, -13 DELETE
LDW280-17556-15 (6)
FROM FLD & B/M.
ON-9, -19, -21, DELETE
LDW280M17550-4 &
REPLACE WITH LDW280
M17550-1 IN FLD & B/M

DESCRIPTION CONT'D
LDW280-17538-36. IN FLD & B/M, FOR -1, -1-1, -11, -13 DELETED LDW280-17556-15(6). FOR -9, -19, -21, DELETED LDW280M17550-4 & REPLACED WITH LDW280M17550-1

DETAIL SPEC REQ		CL II ENGRG CHG		CL I ENGRG CHG	✓	2

REASON FOR EO
ADDITION OF LANDING RADAR REFLECTOR LCR809
ELIMINATE INTERFERENCES AT ASSY

DESCRIPTION OF EO
REF E.O. B4
ON-19, 55 SPOTWELDS WAS 56. ON-11, MS20615-3M3(19) WAS (32); ADD SHIM .010; MS20615-4M3(2) WAS MS20615-3M3(2). ON-21, 58 SPOTWELDS WAS 59. ON-13, MS20615-3M3(14) WAS (37). MS20615-4M3(2) WAS MS20615-3M3(2); LDW280-17538-47 WAS

GAEC C EO RELEASE: ① NK 0202

MODEL	EFFECTIVITY: PROCURING ACTIVITY NO.	GAEC UNIT NO.	SUB CONTR UNIT NO.
LM		LM-2 (32)	
		thru LM-15 (45)	

DRAWING CHANGE REQD: REVISE DWG	RECORD EO	DISPOSITION OF PARTS: REWORK	SCRAP
✓		✓	

APPROVED BY				—				
DATE	7/2/67			—	6/29/67	6/29/67	7/21/67	6/30/67
	VDZ	SUPPORT	RELIAB. GROUP	GROUP LEADER	STRESS GROUP	LIAISON ENGRG	PROJ ENGRG	

PRIORITY	DRAWING TITLE	DRAWING NO.	EO NO.
C	PANEL ASSY - D/S - REMOVABLE BASE HEAT SHIELD INSULATION SUPT	LDW280-52663	B10

ISSUED BY LIAISON C. Farley x3604 SECTION V. D. I. GROUP NO. 335 PL 25

01

NAS 9-1100

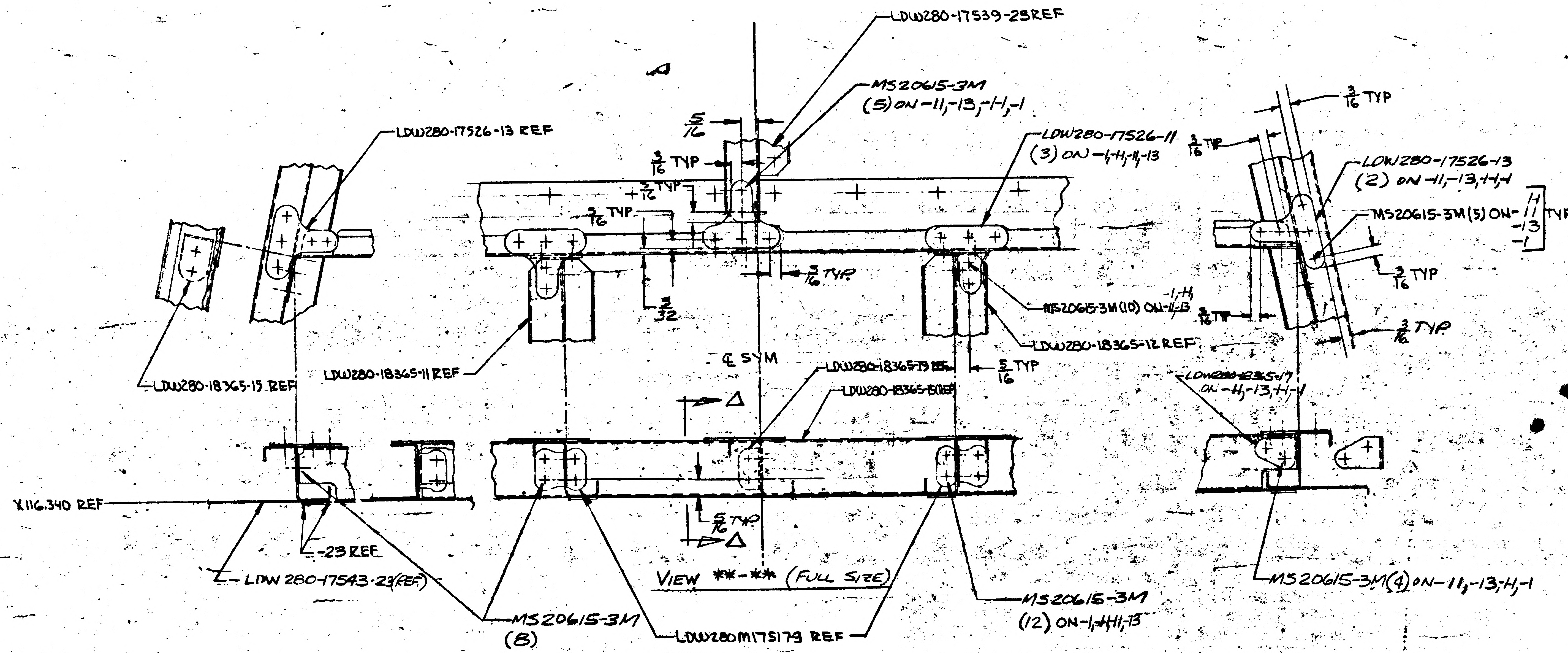
LDW280-17539-23REF
MS20615-3M
(5) ON -11,-13,-H,-1
LDW280-17526-13 REF
5/16
3/16 TYP
3/16 TYP
3/16 TYP
3/16 TYP
3/32
LDW280-17526-11
(3) ON -1,-H,-11,-13
3/16 TYP
3/16 TYP
LDW280-17526-13
(2) ON -11,-13,-H,-1
MS20615-3M(5) ON- H -11 -13 -1 TYP
3/16 TYP
3/16 TYP
MS20615-3M(10) ON -1,-H,-11,-13
LDW280-18365-12REF
5/16 TYP
LDW280-18365-15 REF
LDW280-18365-11 REF
℄ SYM
LDW280-18365-19 REF
LDW280-18365-15(REF)
LDW280-18365-17 ON -H,-13,-11,-1
Δ
Δ
5/16 TYP
X116.340 REF
-23 REF
LDW 280-17543-23(REF)
MS20615-3M
(8)
LDW280M175179 REF
MS20615-3M
(12) ON-1,-H,-11,-13
MS20615-3M(4) ON-11,-13,-H,-1

VIEW **-** (FULL SIZE)

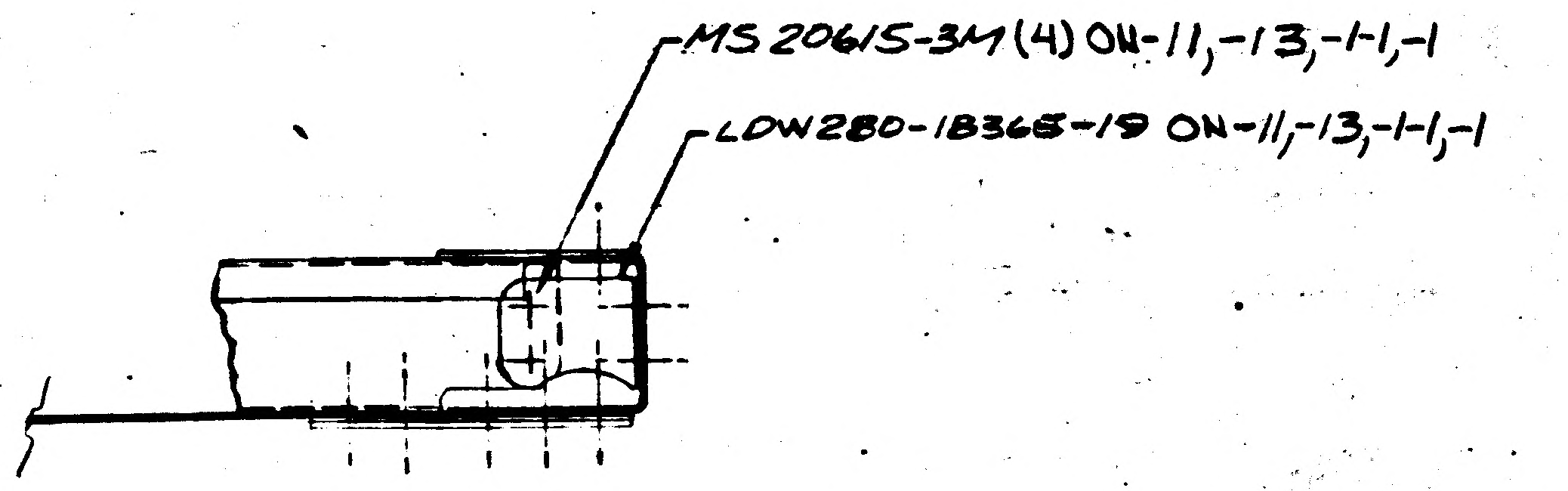
MS 20615-3M (4) ON-11,-13,-H,-1
LDW280-18365-19 ON-11,-13,-H,-1

SECT. Δ-Δ (FULL SIZE)

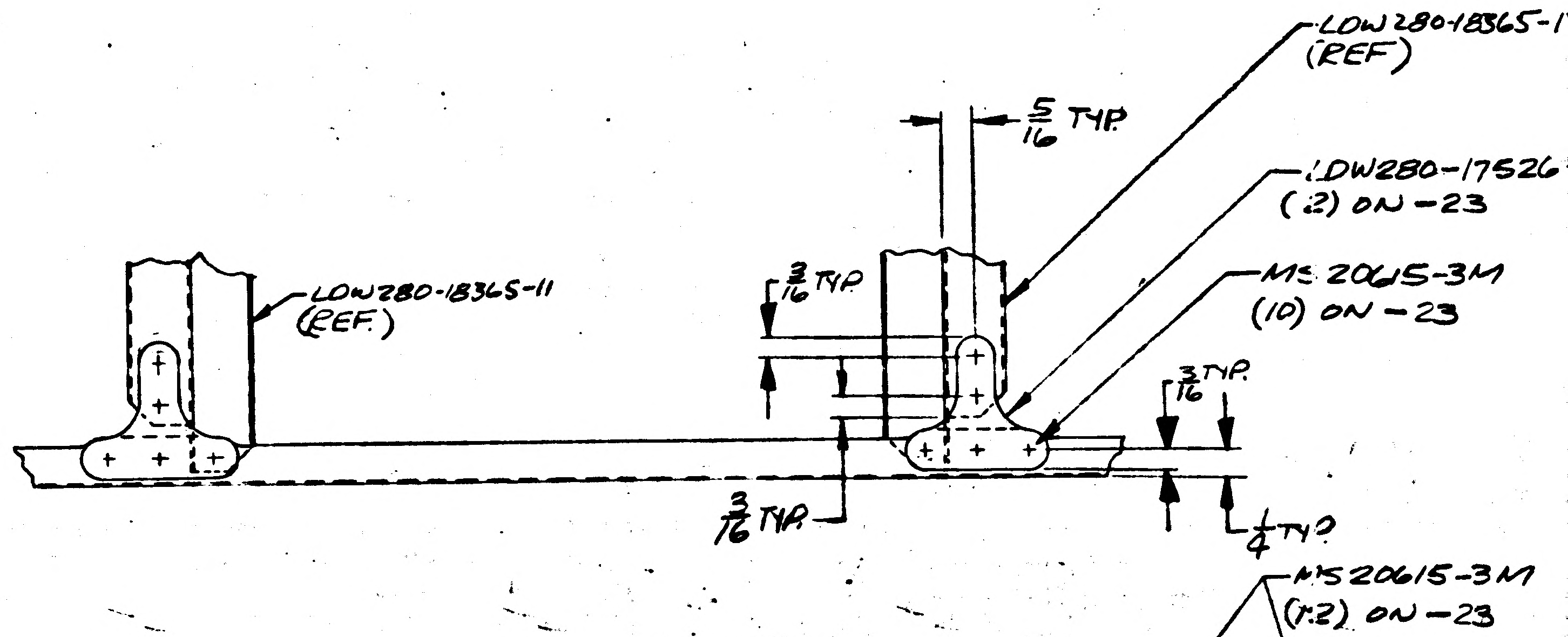
LDW280-18365-11
(REF)
LDW280-18365-1
(REF)
5/16 TYP
LDW280-17526
(2) ON -23
MS 20615-3M
(10) ON -23
3/16 TYP
3/16 TYP
3/16 TYP
1/4 TYP

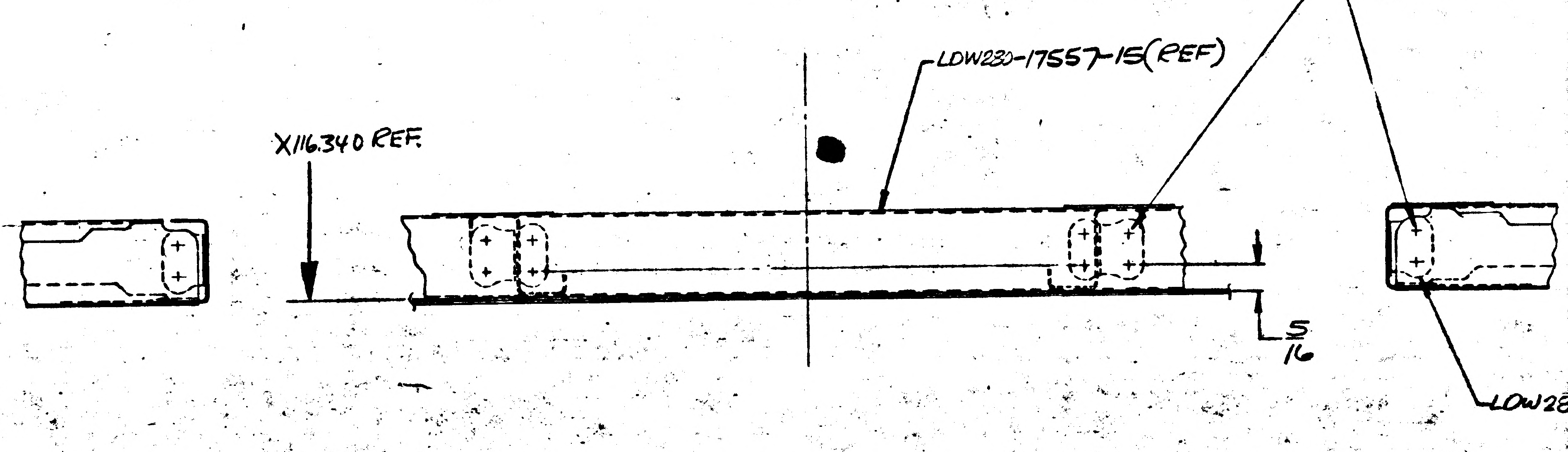
MS20615-3M
(12) ON -23
LDW280-17557-15(REF)
X116.340 REF
5/16
LDW28

VIEW *-* FULL SIZE

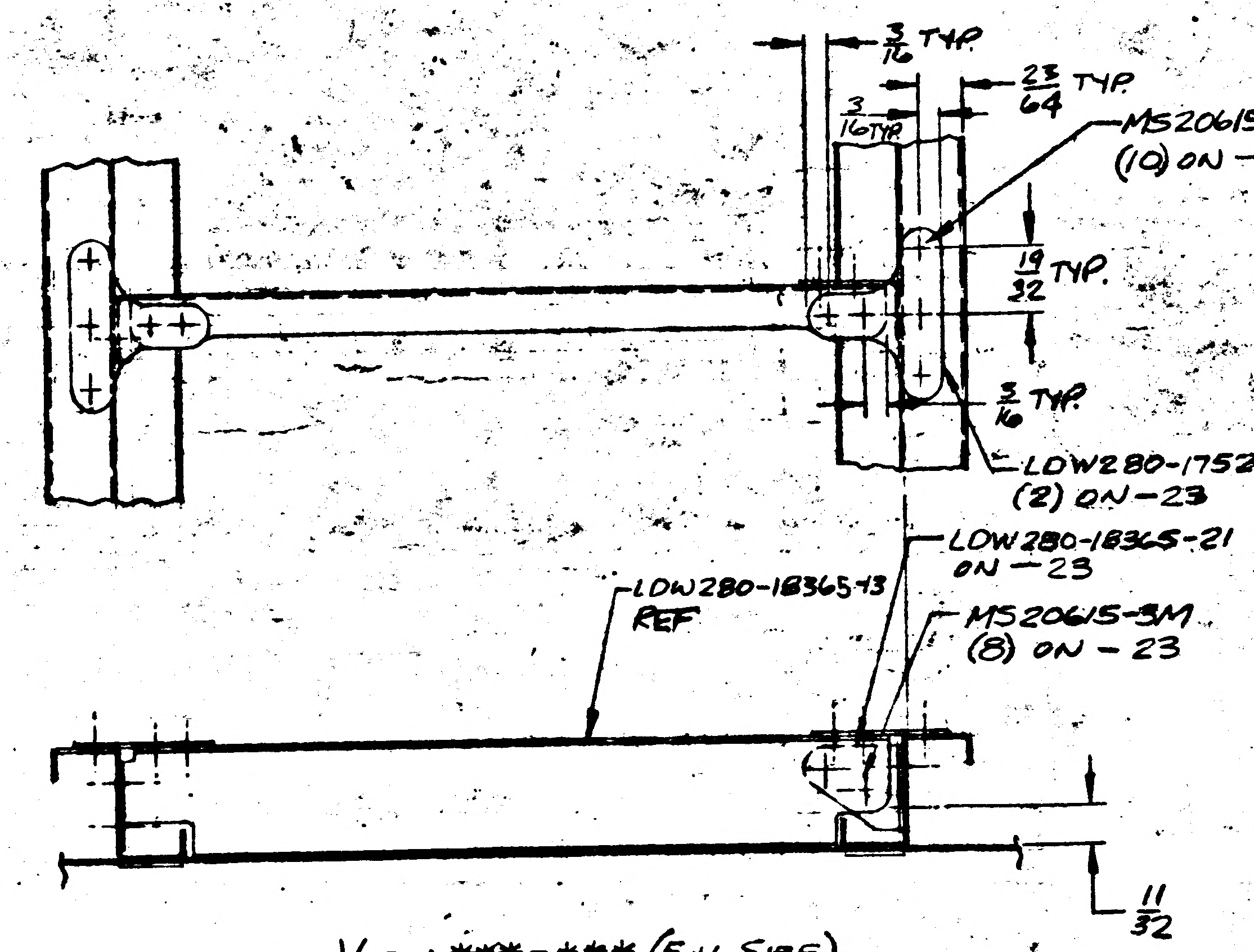
3/16 TYP
3/16 TYP
23/64 TYP
MS20615-3M
(10) ON -23
19/32 TYP
3/16 TYP
LDW280-17526-11
(2) ON -23
LDW280-18365-21
ON -23
LDW280-18365-13
REF
MS20615-3M
(8) ON -23
11/32

VIEW ***-*** (FULL SIZE)

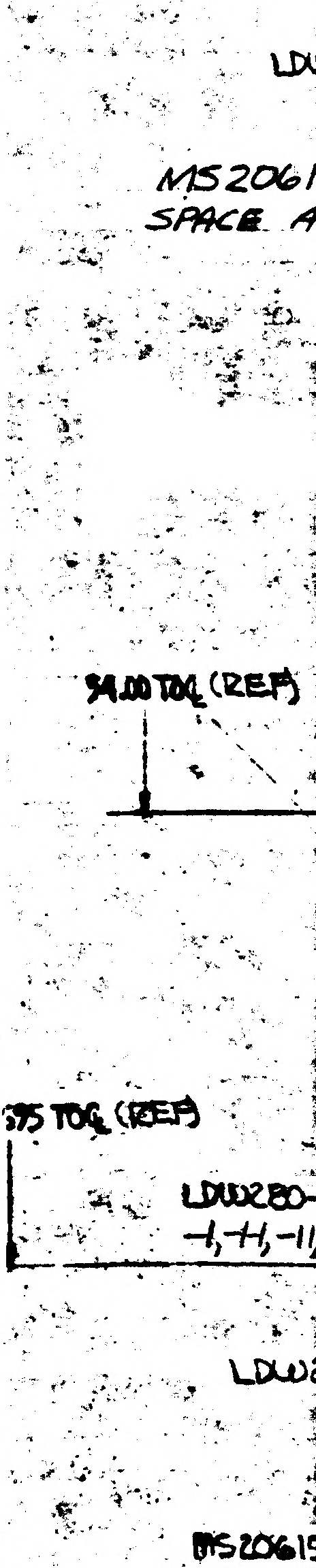
LDW
MS2061
SPACE A
34.00 TOG (REF)
80.375 TOG (REF)
LDW280-
-1,-H,-11,
LDW2
MS20615

01/02 NAS 9-1100

PRINTING INFO ONLY
FULL SIZE SHEET AREA (36 x 97)
1/2 SIZE SHEET AREA (1/4 OF FULL)

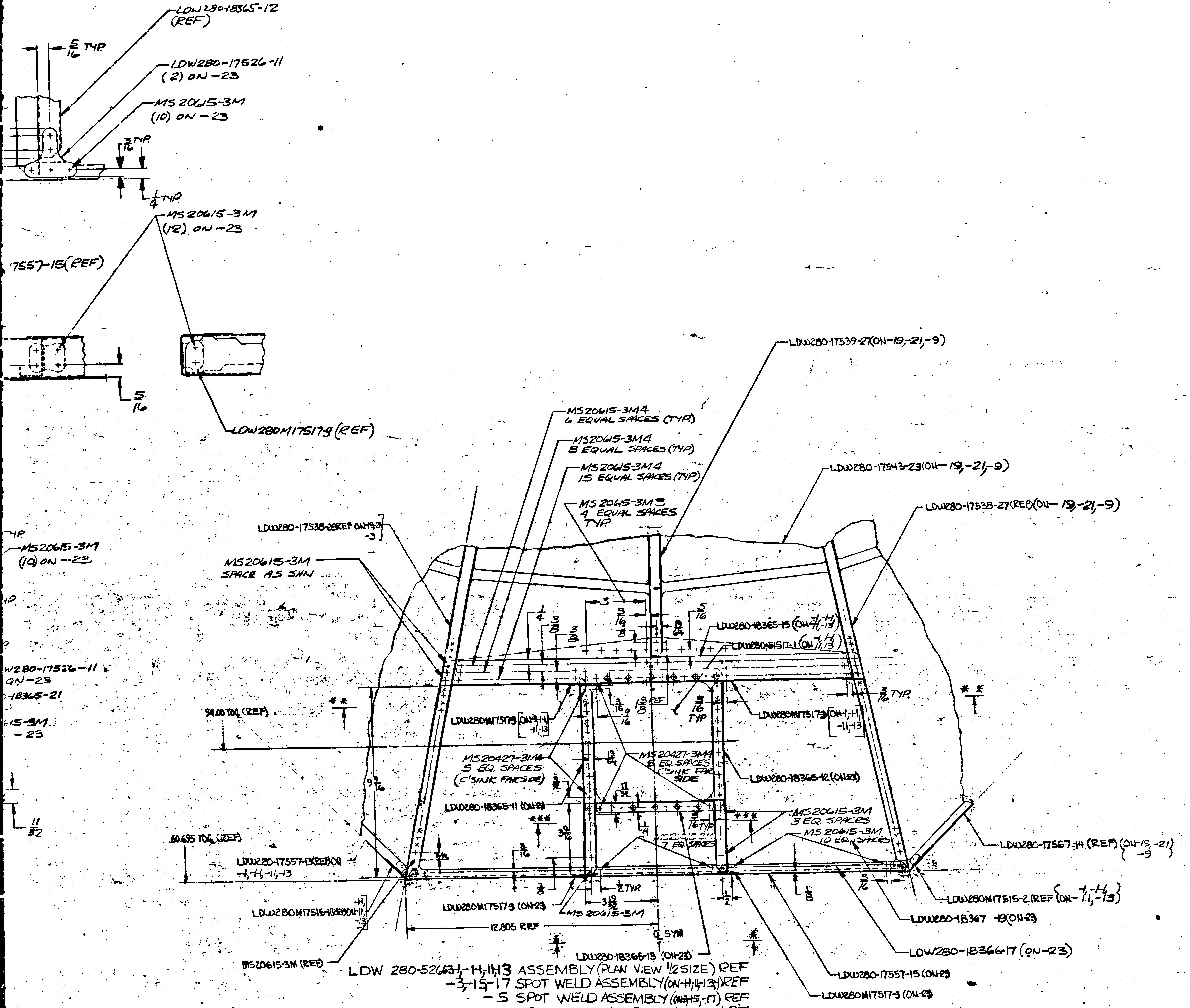
LDW280-18365-12 (REF)
5/16 TYP
LDW280-17526-11 (2) ON -23
MS20615-3M (10) ON -23
3/16 TYP
1/4 TYP
MS20615-3M (12) ON -23
7557-15 (REF)
5/16
LOW280M17517-9 (REF)
YP
MS20615-3M (10) ON -23
W280-17526-11
ON-23
-18365-21
615-3M.
-23
11/32
LDW280-17539-27 (ON-19,-21,-9)
MS20615-3M4 6 EQUAL SPACES (TYP.)
MS20615-3M4 8 EQUAL SPACES (TYP)
MS20615-3M4 15 EQUAL SPACES (TYP)
MS20615-3M3 4 EQUAL SPACES TYP.
LDW280-17543-23 (ON-19,-21,-9)
LDW280-17538-27 (REF) (ON-19,-21,-9)
LDW280-17538-28 REF ON-19,-21 -9
MS20615-3M SPACE AS SHN
LDW280-18365-15 (ON-1,-H,-11,-13)
LDW280-51517-1 (ON-1,-H,-11,-13)
3/16 TYP.
54.00 TOG (REF)
LDW280M17517-3 (ON-1,-H,-11,-13)
LDW280M17517-3 (ON-1,-H,-11,-13)
MS20427-3M4 5 EQ. SPACES (C'SINK FARSIDE)
MS20427-3M4 5 EQ. SPACES C'SINK FAR SIDE
LDW280-18365-12 (ON-23)
LDW280-18365-11 (ON-23)
MS20615-3M 3 EQ. SPACES
MS20615-3M 10 EQ. SPACES
MS20615-3M 7 EQ. SPACES
LDW280-17557-14 (REF) (ON-19,-21,-9)
60.695 TOG (REF)
LDW280-17557-13 (REF) ON -1,-H,-11,-13
LDW280M17515-1 (REF) ON -H,-11,-13
LDW280M17517-3 (ON-23)
MS20615-3M
1/2 TYP
3 19/32
12.805 REF
℄ SYM
LDW280M17515-2 (REF (ON-1,-H,-11,-13)
LDW280-18367-19 (ON-23)
LDW280-18366-17 (ON-23)
LDW280-18365-13 (ON-23)
MS20615-3M (REF)
LDW280-17557-15 (ON-23)
LDW280M17517-3 (ON-23)
1/4
3/8
3/8
3
3/16
3/8
5/16
19/64
1 3/8 REF
9/16
5/16 TYP
19/64
9 9/16
17/32
3 9/16
5/16 TYP
3/8
3/16
7/8
1/2
1/8
3/16
**
***

LDW 280-52663-1,-H,-11,-13 ASSEMBLY (PLAN VIEW 1/2 SIZE) REF
-3,-15,-17 SPOT WELD ASSEMBLY (ON-H,-11,-13,-1) REF
-5 SPOT WELD ASSEMBLY (ON-3,-15,-17) REF
-7 SPOT WELD ASSEMBLY (ON-3,-15,-17) REF
-23 WEB ASSEMBLY (ON-1,-11,-13,-H)
-9,-19,-21 SPOT WELD ASSEMBLY (ON-3,-15,-17) REF

02/02 NAS 9-1100

NOTES:
FOR -1,-H,-11,-13; IN L/M ADD -23 STR. SUB ASSY (1), LDW280-18365-15 (1), LDW280-18365-17 (1), LDW280M-17517-3 (2), LDW280-17526-11 (2) WAS (1), LDW280-17526-13 (4) WAS (2), LDW280-18365-19 (1), LDW280-51517-1 (1), AND MS20615-3M (AS SHN) + MS20427-3M (AS SHN.) REMOVE LDW280M17517-3 (1).

ADD -23 WEB ASSY. CONSISTS OF: LDW280-18367-19 (1), LDW280-18366-17 (1), LDW280-17557-15 (1), LDW280M17517-3 (2) LDW280-18365-11 (1), LDW280-18365-12 (1), LDW280-18365-13 (1) LDW280-18365-21 (1), LDW280-17526-11 (4) + MS20615-3M4 (AS SHN.) + MS20427-3M4 AS SHN)

FOR -9,-19,-21, LDW280-17539-27 REPLACES LDW280-17539-21
LDW280-17543-23 REPLACES LDW280-17543-11

DESCRIPTION OF E.O. CONT'D.
MS20427-3M (6) AND REMOVED LDW280M17517-3 (1)
FOR -9,-19,-21, LDW280-17539-27 REPLACED LDW280-17539-21
& LDW280-17543-23 REPLACED LDW280-17543-11

THIS IS AN ORIGINAL EO.

DETAIL SPEC REQD ☐ CLASS II ENGRG CHG ☐ CLASS I ENGRG CHG ✓ LCD-1932
CONTROL INFO NO. LDW280A8212

REASON FOR EO
PROVIDE ACCESS TO PQGS

DESCRIPTION OF EO
FOR -1,-H,-11,-13 ADDED -23 WEB ASSY. (1), LDW280-18365-15 (1), LDW280-18365-17 (1), LDW280M17517-1 (2) LDW280-17526-11 (2) WAS (1), LDW280-17526-13 (4) WAS (2), LDW280-18365-19 (1) LDW280-51517-1 (1), MS20615-3M (130) CONT'D ABOVE

GRUMMAN EO RELEASE
JK

MODEL	EFFECTIVITY PROCURING ACT. NO.	GAEC UNIT NO.	SUB CONTR UNIT NO.
LEM	LM-2 (32) THRU LM-15 (45)		

DRAWING REVISION REQD: REVISE DWG ✓ RECORD EO
DISPOSITION OF PARTS: REWORK ✓ SCRAP
BY WMB DATE 8/11/67 VD1
SUPPORT
RELIAB GROUP
GROUP LEADER 8/11/67
STRESS GROUP 8/11/67
LIAISON ENGRG
PROJ ENGR 8/11/67
8-14-67

PRIORITY C
DRAWING TITLE
PANEL ASSY D.S.
REM. BASE HEAT SHIELD

ENGINEERING ORDER
DRAWING NO. LDW280-52663
EO NO. C1

3/11 X1641
ISSUED BY J RESER / STRAKOSCH SECTION VD1 GROUP NO. 335 PL 25
CODE IDENT NO. 26512
GRUMMAN AIRCRAFT ENGINEERING CORP
BETHPAGE, L. I., N. Y.

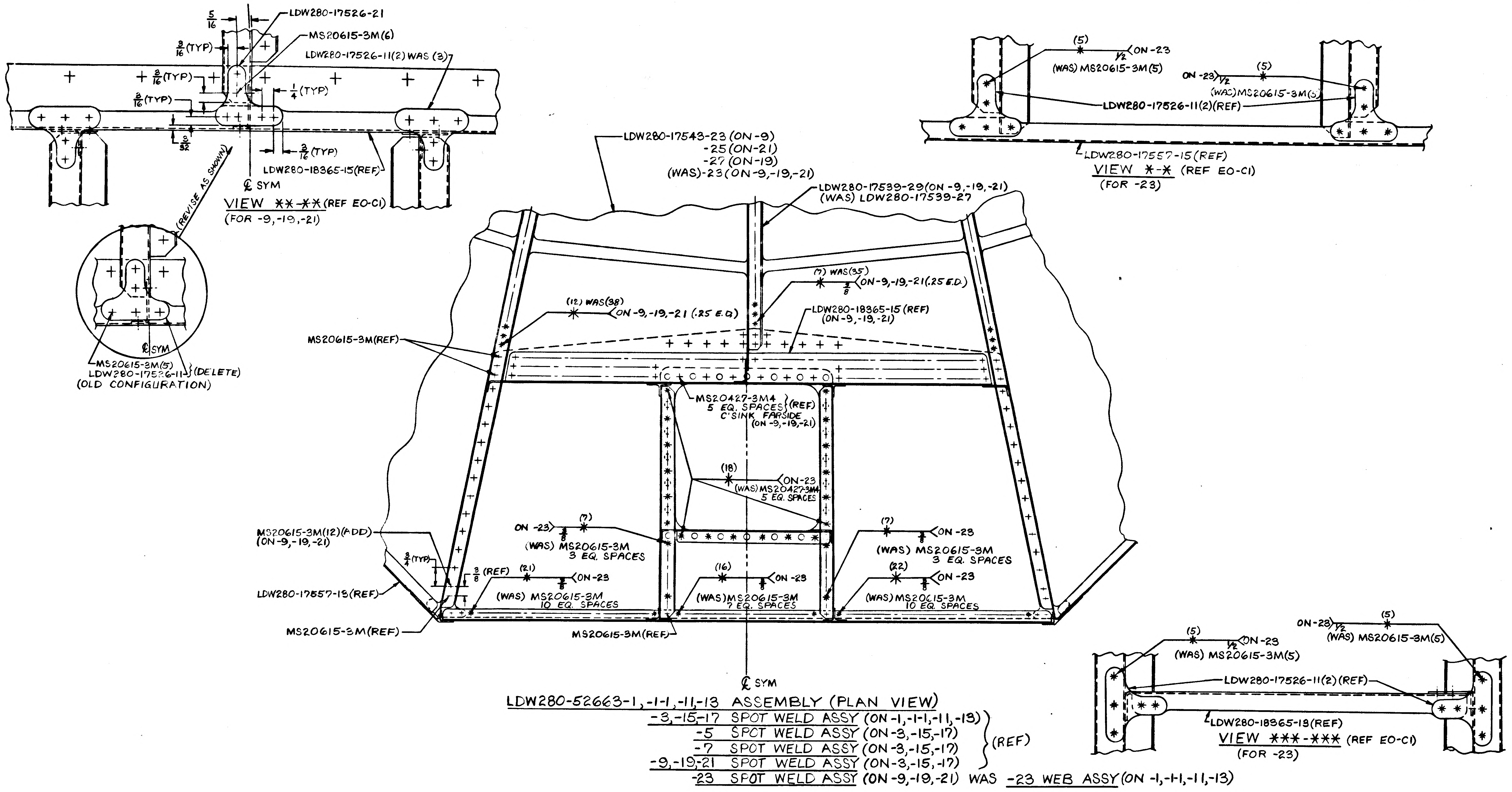
5/16
LDW280-17526-21
3/16 (TYP)
MS20615-3M(6)
LDW280-17526-11(2) WAS (3)
3/16 (TYP)
3/16 (TYP)
1/4 (TYP)
3/32
3/16 (TYP)
LDW280-18365-15(REF)
℄ SYM
VIEW ✱✱-✱✱ (REF EO-C1)
(FOR -9,-19,-21)
(REVISE AS SHOWN)
℄ SYM
MS20615-3M(5)
LDW280-17526-11 (DELETE)
(OLD CONFIGURATION)
LDW280-17543-23 (ON-9)
-25 (ON-21)
-27 (ON-19)
(WAS)-23 (ON-9,-19,-21)
LDW280-17539-29 (ON -9,-19,-21)
(WAS) LDW280-17539-27
(7) WAS (35)
3/8
ON-9,-19,-21 (.25 E.D.)
(12) WAS (38)
ON-9,-19,-21 (.25 E.D.)
LDW280-18365-15 (REF)
(ON-9,-19,-21)
MS20615-3M(REF)
MS20427-3M4
5 EQ. SPACES
C'SINK FARSIDE
(REF)
(ON-9,-19,-21)
(18)
ON-23
(WAS) MS20427-3M4
5 EQ. SPACES
MS20615-3M(12)(ADD)
(ON-9,-19,-21)
3/4 (TYP)
ON -23
(7)
3/8
(WAS) MS20615-3M
3 EQ. SPACES
(7)
ON-23
(WAS) MS20615-3M
3 EQ. SPACES
3/8 (REF)
(21)
ON-23
(WAS) MS20615-3M
10 EQ. SPACES
(16)
ON-23
(WAS) MS20615-3M
7 EQ. SPACES
(22)
ON-23
(WAS) MS20615-3M
10 EQ. SPACES
LDW280-17557-13(REF)
MS20615-3M(REF)
MS20615-3M(REF)
℄ SYM
(5)
ON-23
1/2
(WAS) MS20615-3M(5)
ON-23
1/2
(5)
(WAS) MS20615-3M(5)
LDW280-17526-11(2)(REF)
LDW280-17557-15(REF)
VIEW ✱-✱ (REF EO-C1)
(FOR -23)
(5)
ON-23
1/2
(WAS) MS20615-3M(5)
ON-23
1/2
(5)
(WAS) MS20615-3M(5)
LDW280-17526-11(2)(REF)
LDW280-18365-13(REF)
VIEW ✱✱✱-✱✱✱ (REF EO-C1)
(FOR -23)
LDW280-52663-1, -1-1, -11, -13 ASSEMBLY (PLAN VIEW)
-3, -15, -17 SPOT WELD ASSY (ON -1, -1-1, -11, -13)
-5 SPOT WELD ASSY (ON -3, -15, -17)
-7 SPOT WELD ASSY (ON -3, -15, -17)
-9, -19, -21 SPOT WELD ASSY (ON -3, -15, -17)
(REF)
-23 SPOT WELD ASSY (ON -9, -19, -21) WAS -23 WEB ASSY (ON -1, -1-1, -11, -13)

01
NAS 9-1100

B

GRUMMAN AIRCRAFT ENGINEERING CORP.
CODE IDENT NO. 26512
ENGINEERING ORDER

DWG. NO. LDW280-52663
EO NO. C2
CONTROL INFO NO. LM-2-3886

THIS IS A REVISION OF EO-C1

"FOR -1, -1-1, -11 & -13" SHOULD BE "FOR -9, -19 & -21"
[FOR] ADDED -23 ASSEMBLY (1), LDW280-18365-15(1), LDW280-18365-17(1), LDW280-17526-13(4) WAS (2), LDW280-18365-19(1), LDW280-51517-1(1), MS20615-3M(130) & MS20427-3M(6).

FOR -1, -1-1, -11 & -13 DELETE:
"ADDED LDW280M17517-1(2), LDW280-17526-11(2) WAS (1) AND REMOVED LDW280M17517-3(1)."
FOR -9, -19, & -21 ADD:
"ADDED LDW280M17517-3(2), LDW280-17526-21 (1), LDW280-17526-11(4) WAS (3) AND REMOVED LDW280M17517-3(1).

FOR -9, -19 & -21 DELETE: "LDW280-17539-27 REPLACED LDW280-17539-21."
ADD: "LDW280-17539-29 REPLACED LDW280-17539-21."

FOR -19: "LDW280-17543-23 REPLACED LDW280-17543-11" SHOULD BE "LDW280-17543-27 REPLACED LDW280-17543-15."

FOR -21: "LDW280-17543-23 REPLACED LDW280-17543-11" SHOULD BE "LDW280-17543-25 REPLACED LDW280-17543-13."

NOTE: (FOR REWORK ONLY) #40 HOLES DRILLED TO REMOVE SPOTWELDS MAY REMAIN OPEN.

DETAIL SPEC REQ ☐ CL II ENGRG CHG ☐ CL I ENGRG CHG ☑ LCD-1932 2

REASON FOR EO: PROVIDE ACCESS TO PQGS
INCORRECT PART & ASSY NOTATIONS
FACILITATE MANUFACTURING

DESCRIPTION OF EO: REFERENCE EO-C1
SEE ABOVE

GAEC C EO RELEASE

MODEL	EFFECTIVITY PROCURING ACTIVITY NO.	GAEC UNIT NO.	SUB CONTR UNIT NO.
LM		LM-2(32)	
		THRU	
		LM-15(45)	

DRAWING CHANGE REQD: REVISE DWG ✓ RECORD EO
DISPOSITION OF PARTS: REWORK ✓ SCRAP

		SUPPORT	RELIAB. GROUP	GROUP LEADER	STRESS GROUP	LIAISON ENGRG	PROJ ENGRG
APPROVED BY							
DATE	10/9/67				9/30/67		10/9/67
	V.D.I.						

PRIORITY: C
DRAWING TITLE: PANEL ASSEMBLY~DESCENT STAGE REMOVABLE BASE HEAT SHIELD-SUPPORT
DRAWING NO. LDW280-52663
EO NO. C2

ISSUED BY LIAISON J. MALONEY 9/29/67 X3604 SECTION V.D.I. GROUP NO. 335 PL 25

ENG 32.1 REV 3-65

GRUMMAN AIRCRAFT ENGINEERING CORP.
CODE IDENT NO. 26512
ENGINEERING ORDER

DWG. NO. LDW280-52663
EO NO. 01
CONTROL INFO NO. LDW280B0652

* DESCRIPTION OF EO

IN B/M ONLY:

ON-9 ASSY LDW280M17517-3 (2) REQD (WAS) 1 REQD
ON-11 ASSY REMOVE -19 (1) REQD
ON-13 ASSY -21 (1) REQD REPLACES -17 (1) REQD
ON-15 ASSY ADD -19 (1) REQD
ON-17 ASSY ADD -21 (1) REQD
ON-23 ASSY REMOVE LDW280-17526-11 (4) REQD, LDW280M17517-3 (2) REQD
MS20615-3M3 (8) REQD, LDW280-18365-11 (1) REQD, LDW280-18365-12 (1) REQD
LDW280-18365-13 (1) REQD, LDW280-18365-21 (1) REQD, LDW280-18366-17 (1) REQD
LDW280-18367-19 (1) REQD, LDW280-17557-15 (1) REQD

DETAIL SPEC REQ	☐	CL II ENGRG CHG	✓	CL I ENGRG CHG	☐

(3)

REASON FOR EO: EO'S IMPROPERLY INCORPORATED DRAFTING ERROR

DESCRIPTION OF EO: NOTED ABOVE *

GAEC EO RELEASE: 12-7-67

MODEL	EFFECTIVITY: PROCURING ACTIVITY NO.	GAEC UNIT NO.	SUB CONTR UNIT NO.
LM		NOT REQD	

DRAWING CHANGE REQD: REVISE DWG	RECORD EO	DISPOSITION OF PARTS: REWORK	SCRAP
✓		NOT	REQD

APPROVED BY	VDI	SUPPORT	RELIAB. GROUP	GROUP LEADER	STRESS GROUP	LIAISON ENGRG	PROJ ENGRG	
DATE	11/28/67			P.T. 11-28-67 11/28/67	11/29/67		11/28/67	12-1-67

PRIORITY: E
DRAWING TITLE: PANEL ASSY-DESCENT STAGE R. BASE HEATSHIELD INSULATION SUPPORT
DRAWING NO.: LDW280-52663
EO NO.: 01

ISSUED BY J. ANDERSEN / P. THORJUSEN SECTION VDI GROUP NO. 335 PL 25

01

NAS 9-1100

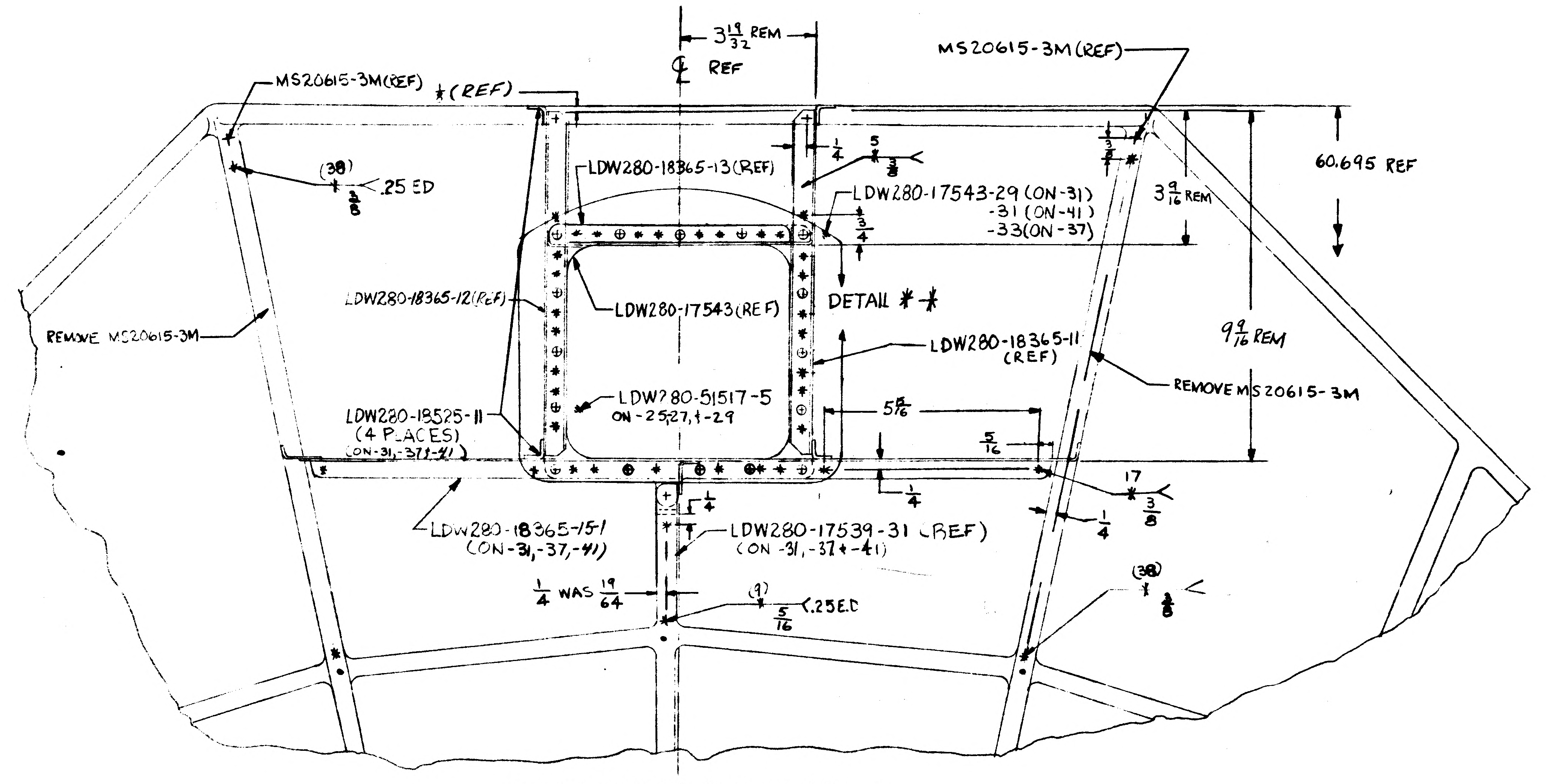
MS20615-3M(REF)
*(REF)
$3\frac{13}{32}$ REM
℄ REF
MS20615-3M(REF)
(38) 3/8 .25 ED
LDW280-18365-13(REF)
5/8
LDW280-17543-29 (ON-31)
-31 (ON-41)
-33(ON-37)
3/4
$3\frac{5}{16}$ REM
60.695 REF
REMOVE MS20615-3M
LDW280-18365-12(REF)
LDW280-17543(REF)
DETAIL *-*
LDW280-18365-11 (REF)
$9\frac{9}{16}$ REM
LDW280-51517-5 ON-25,27,+-29
$5\frac{5}{8}$
REMOVE MS20615-3M
LDW280-18525-11 (4 PLACES) (ON-31,-37,+-41)
5/16
17
1/4
3/8
1/4
LDW280-18365-15-1 (ON-31,-37,-41)
LDW280-17539-31 (REF) (ON -31,-37+-41)
1/4 WAS 19/64
(9) 5/16 .25ED
(38) 3/8

VIEW LOOKING DOWN (REF)
LDW280-52663-25 ASSY (ADD)
-27 ASSY (ADD)
-29 ASSY (ADD)

-33 ASSY ON -25 (ADD)
-39 ASSY ON -27 (ADD)
-43 ASSY ON -29 (ADD)

IN LM ONLY ON -9,-19 + -21, LDW280M17517-3 4 REQ'D (WAS) 2 REQ'D
IN L/M ONLY ON -23, REMOVE LDW280M17517-3 (2)
IN L/M ONLY ON -9, ADD LDW280-51517-1 COVER INSTL (1)
IN L/M ONLY ON -13 PANEL ASSY, -17 WELDED ASSY REPLACES -21 WELDED ASSY

-25 IS IDENTICAL TO -1-1 EXCEPT -33 WELD ASSY REPLACES -3 WELD ASSY AND REMOVE LDW280P18133-11 PLATE (2) AND ADD LDW280-51517-5 COVER INSTL (1)
-33 WELD ASSY IS IDENTICAL TO -3 WELD ASSY EXCEPT -31 WELD ASSY REPLACES -9 WELD ASSY
-31 WELD ASSY IS IDENTICAL TO -9 WELD ASSY EXCEPT LDW280-18525-11(4) REPLACES LDW280M17517-3(4), LDW280-18365-15-1 REPLACES LDW280-18365-15, LDW280-17543-29 REPLACES LDW280-17543-23, LDW280-17539-31 REPLACES LDW280-17539-29, -35 WELDED ASSY REPLACES -23 WELDED ASSY AND REMOVE LDW280-51517-1 COVER INSTL(1)
-35 WELDED ASSY IS IDENTICAL TO -23 WELDED ASSY EXCEPT REMOVE LDW280-18366-17(1)

-27 PANEL ASSY IS IDENTICAL TO -11 PANEL ASSY EXCEPT -39 WELDED ASSY REPLACES -15 WELDED ASSY AND REMOVE LDW280P18133-11(2) AND ADD LDW280-51517-5(1)
-39 WELDED ASSY IS IDENTICAL TO -15 WELDED ASSY EXCEPT -37 WELDED ASSY REPLACES -19 WELDED ASSY.
-37 IS IDENTICAL TO -19 EXCEPT LDW280-17539-31 REPLACES LDW280-17539-29, LDW280-17543-33 REPLACES LDW280-17543-27, LDW280-18525-11 (4) REPLACES LDW280M17517-3(4), LDW280-18365-15-1 REPLACES LDW280-18365-15, REMOVE LDW280-51517-1 AND -35 WELD ASSY REPLACES -23 WELDED ASSY.

-29 PANEL ASSY IS IDENTICAL TO -13 PANEL ASSY EXCEPT -43 WELDED ASSY REPLACES -17 WELDED ASSY AND ADD LDW280-51517-5 AND REMOVE LDW280P18133-11(2)
-43 WELD ASSY IS IDENTICAL TO -17 EXCEPT -41 WELDED ASSY REPLACES - 21 WELDED ASSY
-41 IS IDENTICAL TO -21 EXCEPT -35 REPLACES -23, LDW280-17539-31 REPLACES LDW280-17539-29, LDW280-17543-31 REPLACES LDW280-17543-25, LDW280-18525-11(4) REPLACES LDW280M17517-3(4), LDW280-18365-15-1 REPLACES LDW280-18365-15 AND REMOVE LDW280-51517-1.

IN M/B, B/M + F/D ADD -25, -27, + -29 ASSYS.
IN M/B ON -25, N/A LDW280-25662 EFF: LM-5(35) THRU LM-15(45) 2 EA
IN M/B ON -27 + -29, N/A LDW280-25662 EFF: LM-5(35) THRU LM-15(45) 1 EA
IN M/B RESTRICT -1-1 ASSY FOR USE ON LM-3(33) + LM-4(34)
IN M/B RESTRICT -11 + -13 ASSYS FOR USE ON LM-2(32) THRU LM-4(34)

IN F/D ADD DETAIL *-*
IN F/D REVISE VIEW LOOKING DOWN, VIEWS AV-AV, + AU-AU AND ALL OTHER APPROPRIATE VIEWS

FULL SIZE (3ft × 4.5) = 13.5 ft²
1/4 SIZE = 3.4 ft²

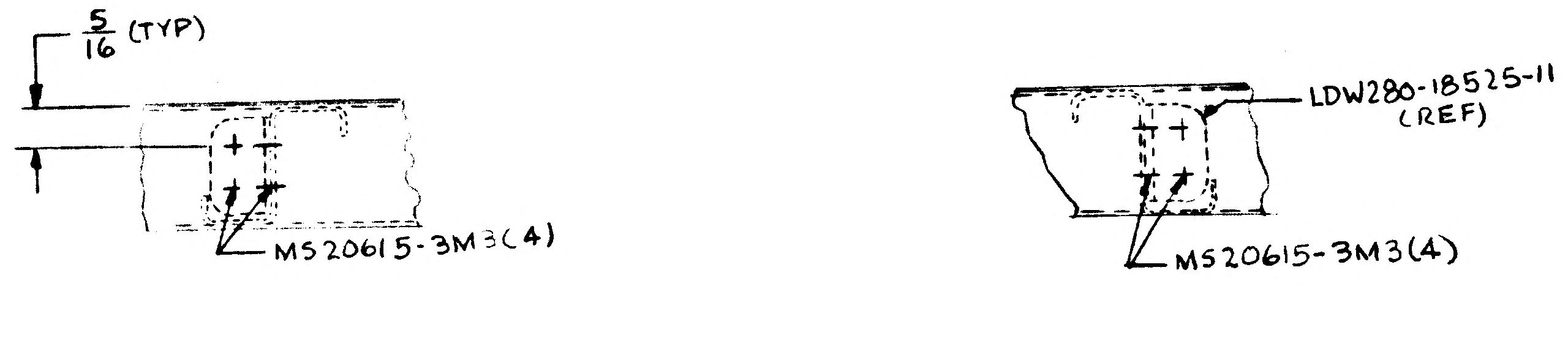
5/16 (TYP)
MS20615-3M3(4)
LDW280-18525-11 (REF)
MS20615-3M3(4)

VIEW AU-AU

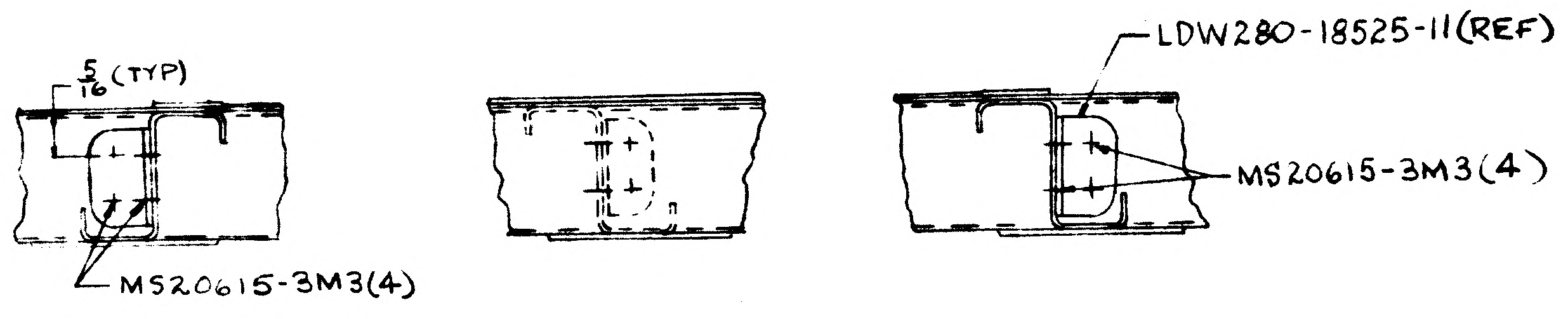
5/16 (TYP)
LDW280-18525-11(REF)
MS20615-3M3(4)
MS20615-3M3(4)

VIEW AV-AV

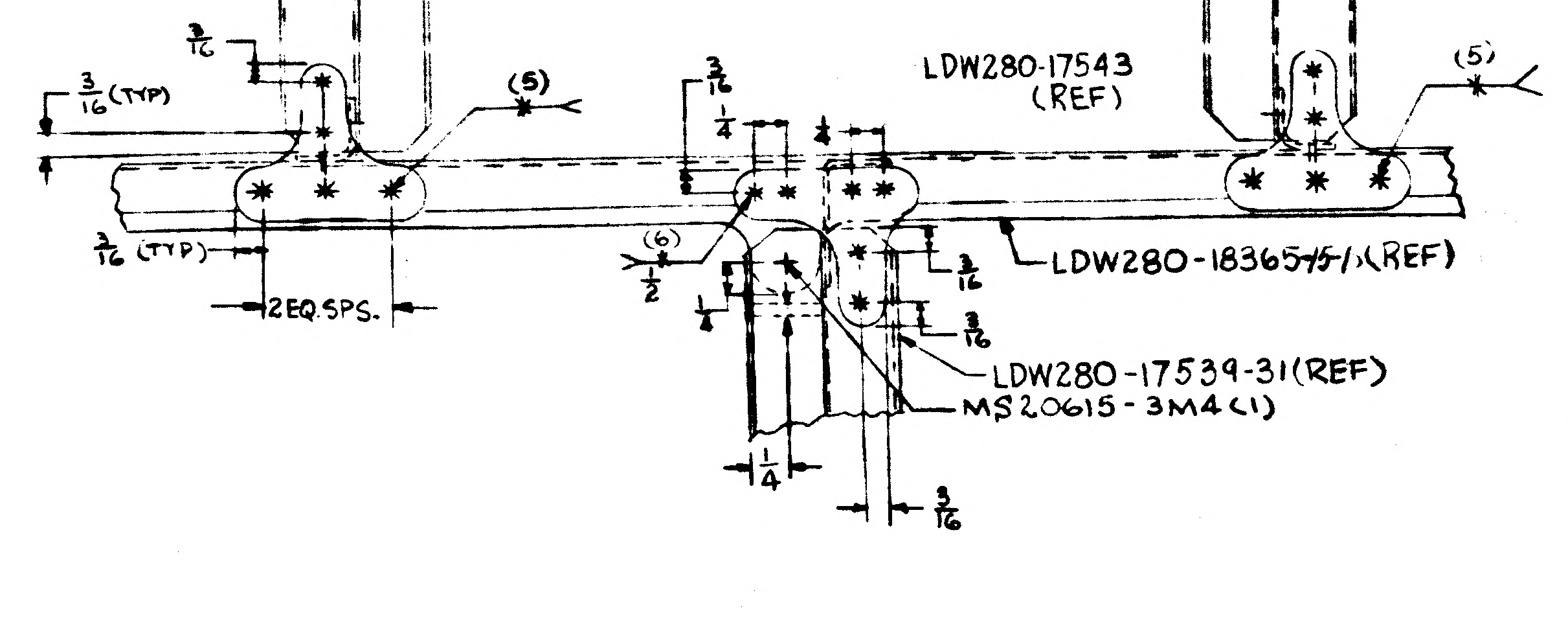
3/16
3/16 (TYP)
(5)
LDW280-17543 (REF)
(5)
3/16 (TYP)
2 EQ SPS.
(6)
LDW280-18365-15-1(REF)
LDW280-17539-31(REF)
MS20615-3M4(1)
1/4
3/16

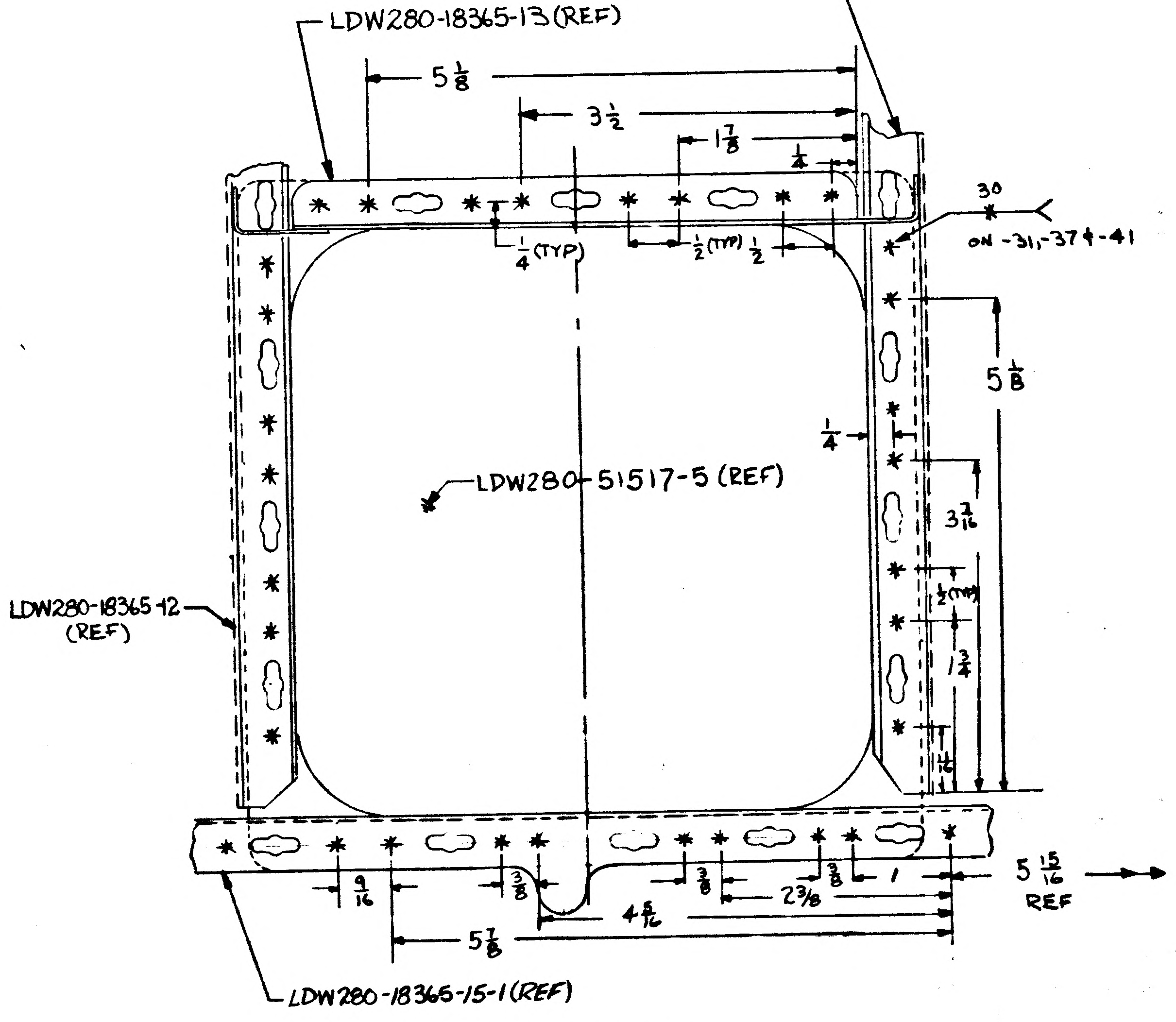
LDW280-18365-11(REF)
LDW280-18365-13(REF)
$5\frac{1}{8}$
$3\frac{1}{2}$
$1\frac{7}{8}$
30
ON -31, -37 + -41
1/4 (TYP)
1/2 (TYP)
$5\frac{5}{8}$
1/4
LDW280-51517-5 (REF)
LDW280-18365-12 (REF)
$3\frac{7}{16}$
$5\frac{15}{16}$ REF
$5\frac{7}{8}$
$4\frac{5}{16}$
$2\frac{3}{8}$
LDW280-18365-15-1(REF)

DETAIL *-* (ADD)

01 NAS 9-1100

DETAIL SPEC REQD		CLASS II ENGRG CHG		CLASS I ENGRG CHG	✓ LCD 2532 PKG1 + LCD 2637 PKG2	CONTROL INFO NO. LDW28C R 138

REASON FOR EO: PQGS ACCESS DOOR REDESIGN

DESCRIPTION OF EO: ADDED -25 -27 + -29 ASSYS RESTRICTED -1-1 ASSY TO LM-3(33) THRU LM-4(34) (WAS) LM-3(33) THRU LM-15(45) RESTRICTED -11 + -13 ASSYS TO LM-2(32) THRU LM-4(34) (WAS) LM-2(32) THRU LM-15(45).

GRUMMAN EO RELEASE: K 4/2/8

MODEL	PROCURING ACT. NO.	GAEC UNIT NO.	SUB CONTR UNIT NO.
LM		LM-5(35)	
		THRU	
		LM-15(45)	

DRAWING REVISION REQD		DISPOSITION OF PARTS		BY / DATE		SUPPORT	RELIAB GROUP	GROUP LEADER	STRESS GROUP	LIAISON ENGRG	PROJ ENGR	
REVISE DWG	RECORD EO	REWORK	SCRAP									
✓			-1-1 -11 -13	S	4/2/68 VDI			3/26/68	3/26/68		3/29/68	4-2-68

PRIORITY: C

DRAWING TITLE: PANEL ASSY DESCENT STAGE ~ REMOVABLE BASE HEAT SHIELD INSULATION SUPPORT

ENGINEERING ORDER
DRAWING NO. LDW280-52663
EO NO. D2

G.2 D. SHAPIRO X-1153
ISSUED BY P. THORJUSEN SECTION VDI GROUP NO. 335 PL 25
CODE IDENT NO. 26512
GRUMMAN AIRCRAFT ENGINEERING CORP
BETHPAGE, L. I., N. Y.

ENG 32 3 REV 3-65
CDR 042968

GRUMMAN AIRCRAFT ENGINEERING CORP.
CODE IDENT NO. 26512
ENGINEERING ORDER

ENG 32.1 REV 3-65

DWG. NO. LDW280-52663
EO NO. D3
CONTROL INFO NO. LM-29-1253

THIS IS A REVISION OF E.O. D2

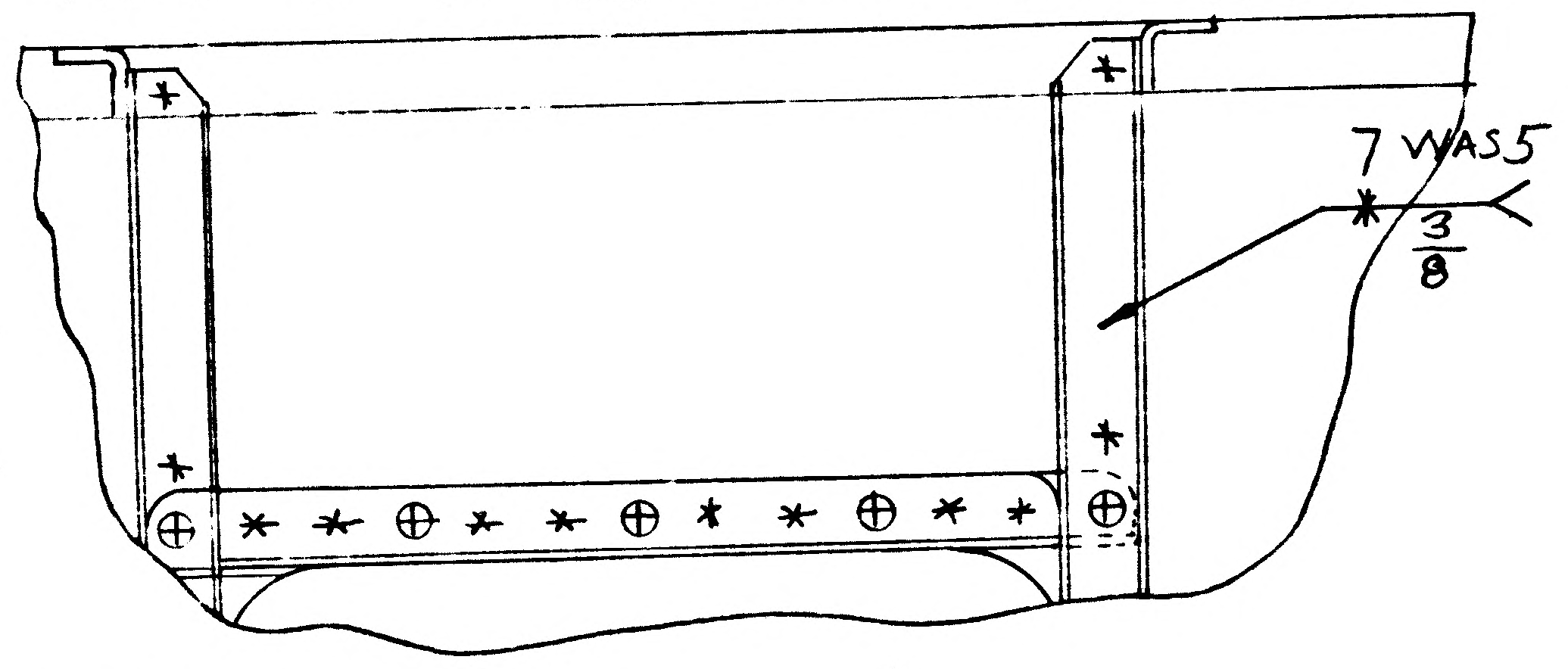

-25 ASSY, -27 ASSY,
-29 ASSY (REF)

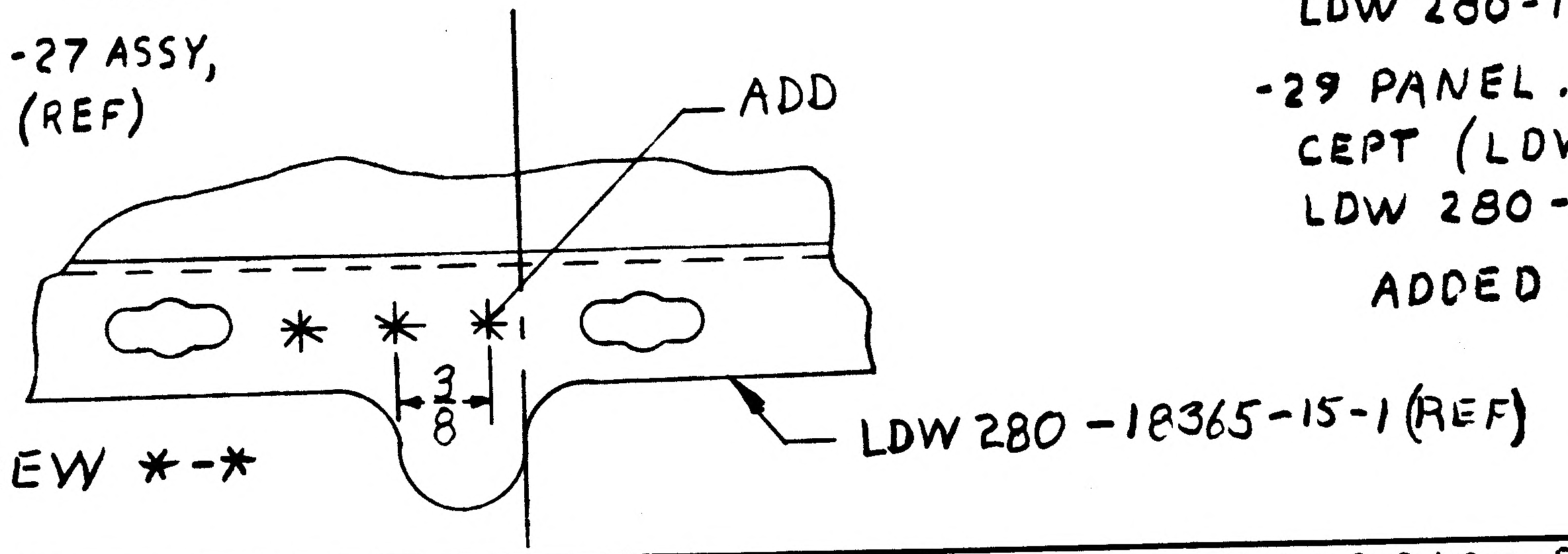

VIEW *-*

IN NOTES
REMOVE LDW280-18366-17 (1)
& LDW 280-18367-19(1)

WAS
REMOVE LDW 280-18366-17 (1)

-27 PANEL ... IDENTICAL TO -19 EXCEPT (LDW 280-17557-15 REPLACES LDW 280-17557-11,)...

-29 PANEL ... IDENTICAL TO -21 EXCEPT (LDW 280-17557-15 REPLACES LDW 280-17557-11,)...

ADDED WORDING IN PARENTHESES

DETAIL SPEC REQ	☐	CL II ENGRG CHG	☐	CL I ENGRG CHG	✓ LCD 2532 PKG 1 & LCD 2637 PKG 2 (29)

REASON FOR EO
ADDITIONAL SPOT WELDS REQ'D.
TAB REMOVED TO PROVIDE ACCESS TO PQGS

DESCRIPTION OF EO
REV. E.O. D2 ON -31, -37, -41
7 SPOT WELDS WAS 5.
ON VIEW *-*
ADDED SPOT WELD
IN NOTES: REMOVED LDW 280-18367-19; REPLACED LDW 280-17757-11 WITH LDW 280-17757-15 IN -27 & -29

GAEC EO RELEASE: HF

MODEL	PROCURING ACTIVITY NO.	GAEC UNIT NO.	SUB CONTR UNIT NO.
LM		LM 5 (35)	
		THRU	
		LM 15 (45)	

DRAWING CHANGE REQD: REVISE DWG	RECORD EO	DISPOSITION OF PARTS: REWORK	SCRAP
✓		✓	

	APPROVED BY		SUPPORT	RELIAB. GROUP	GROUP LEADER	STRESS GROUP	LIAISON ENGRG	PROJ ENGRG	~~CONT~~
DATE	7-9-68					7/9/68	7/9/68		7-25-68

PRIORITY: C
DRAWING TITLE: PANNEL ASSY. D/S ~ REMOVABLE BASE HEAT SHIELD INSULATION SUPPORT
DRAWING NO.: LDW 280-52663
EO NO.: D3

ISSUED BY LIAISON BILL HOLSTEN W. FRANK X7930
SECTION STRUCT. SYS.
GROUP NO. 335
PL 25

01

NAS 9-1100

ENG 32.1 REV 3-65

GRUMMAN AIRCRAFT ENGINEERING CORP.
CODE IDENT NO. 26512
ENGINEERING ORDER

DWG. NO. LEO 280 | EO NO. 1071
CONTROL INFO NO. LDW280-B3885

* IN M/B, B/M & F/D RESTRICT THE DASH NO. ASSYS LISTED BELOW TO LM 5(35) ONLY EFF WAS LM 5(35) THRU LM 15(45)

DWG. NO. ▲ ✓	CHG NO.	TITLE
LDW280-51517-5	A4	COVER INSTL PROP. QUANTITY GAGE ACCESS
LDW 280-52663-25-27 & -29	D4 ✓	PANEL ASSY DESCENT STAGE - REMOVABLE BASE HEAT SHIELD - INSULATION SUPPORT

DETAIL SPEC REQ	☐	CL II ENGRG CHG	☐	CL I ENGRG CHG	✓ LCD 2965 PKG 1

REASON FOR EO: REDESIGN BASE HEAT SHIELD FOR D/E THRUST DECAY

DESCRIPTION OF EO: IN M/B ▲ RESTRICTED TO LM-5(35) ONLY WAS LM-5(35) THRU LM-15(45)

(5)

GAEC EO RELEASE: C JK 7/29/68

MODEL	EFFECTIVITY: PROCURING ACTIVITY NO.	GAEC UNIT NO.	SUB CONTR UNIT NO.
LM		LM-6 (36)	
		THRU	
		LM-15 (45)	

DRAWING CHANGE REQD: REVISE DWG	RECORD EO	DISPOSITION OF PARTS: REWORK	SCRAP
✓			✓

APPROVED BY	Jap	N		P8t			Jap	
DATE	7/9/68	7/10/68		7/9/68	[illegible]		7/16/68	7-29-68
	VDI	~~SUPPORT~~ THERMO	RELIAB. GROUP	GROUP LEADER	STRESS GROUP	LIAISON ENGRG	PROJ ENGRG	

PRIORITY: C | DRAWING TITLE: NOTED | DRAWING NO. LEO 280 | EO NO. 1071

8-2-68
ISSUED BY R. STILWELL/P. THORJUSEN X1153 SECTION VDI GROUP NO. 335 PL 25

01 NAS 9-1100

GRUMMAN AIRCRAFT ENGINEERING CORP.
CODE IDENT NO. 26512
ENGINEERING ORDER

ENG 32.1 REV 3-65

DWG. NO. LDW280-52663
EO NO. D5
CONTROL INFO NO. LDW280B4078

IN F/D & B/M:

ON-35
REMOVE LDW280-18367-19 (1).

ON-31 REMOVE LDW280-17557-11 (2)

ON-37 & -41 REMOVE LDW280-17557-11 (1)

DETAIL SPEC REQ		CL II ENGRG CHG		CL I ENGRG CHG	✓ LCD 2965 PK1

REASON FOR EO: BASE HEAT SHIELD REDESIGN FOR D/E THRUST DECAY

DESCRIPTION OF EO: IN F/D & B/M ON-35 REMOVED LDW280-18367-19, ON-31 REMOVED LDW280-17557-11 (2) & ON-37 & -41 REMOVED LDW280-17557-11

GAEC EO RELEASE: JK 8/1/ (5) C

MODEL	PROCURING ACTIVITY NO.	GAEC UNIT NO.	SUB CONTR UNIT NO.
LM		LM5 (35) THRU	
LM		15 (45)	

DRAWING CHANGE REQD: ✓ REVISE DWG / RECORD EO

DISPOSITION OF PARTS: ✓ REWORK / SCRAP

APPROVED BY								
DATE	7/9/68			7/9/68	7/11/68		7/10/68	8-1-68
5	VDI	SUPPORT	RELIAB. GROUP	GROUP LEADER	STRESS GROUP	LIAISON ENGRG	PROJ ENGRG	CONT

PRIORITY: C

DRAWING TITLE: PANEL ASSY D/S - REM. B. H. S. INSUL SUPPT.

DRAWING NO.: LDW280-52663

EO NO.: D5

071268
ISSUED BY G. BELEV / D. RAGAS Z1153 SECTION VDI GROUP NO. 280 PL 25

01 NAS 9-1100

ENG 32.1 REV 3-65

GRUMMAN AIRCRAFT ENGINEERING CORP.
CODE IDENT NO. 26512
ENGINEERING ORDER

DWG. NO. LDW280-52663
EO D6
CONTROL INFO NO. LM29-1263

FOR -9, -19, & -21 ASSYS IN B/M (SH 2.01 & 2.04) DELETE CHANNEL LDW280-17557-11.

IN F/D (ZONE 9C) REMOVE CALLOUT "LDW280-17557-11 (ON -9, -19 & -21)".

DETAIL SPEC REQ	✓	CL II ENGRG CHG		CL I ENGRG CHG	

REASON FOR EO: UPDATE DWG
LDW280-17557-11 WAS REPLACED BY -15 IN -23 ASSY AS PER E.O. C1

DESCRIPTION OF EO: REMOVED LDW280-17557-11 FROM F/D & B/M

GAEC EO RELEASE: C (29) J/C 2,3,4,5

MODEL	EFFECTIVITY: PROCURING ACTIVITY NO.	GAEC UNIT NO.	SUB CONTR UNIT NO.
LM		LM 2(32)	
		THRU	
		LM 5(35)	

DRAWING CHANGE REQD: REVISE DWG ✓ | RECORD EO

DISPOSITION OF PARTS: NOT REWORK | REQD SCRAP

APPROVED BY	Jap			—	J.m	W.F.	Jap	LM
DATE	9/16/68			—	8-12-68	8-9-68	9/16/68	9-4-68
	[illegible]	SUPPORT	RELIAB. GROUP	GROUP LEADER	STRESS GROUP	LIAISON ENGRG	PROJ ENGRG	GOVT

PRIORITY: C

DRAWING TITLE: PANEL ASSY DESCENT STG RMVBL BASE ~ H.S. INSLTN SPRT

DRAWING NO.: LDW280-52663

EO NO.: D6

ISSUED BY LIAISON J. STECEWYCZ X7930 SECTION STRUCT. SYS. GROUP NO. 335 PL 25

01

NAS 9-1100

ENG 32.1 REV 3-65

GRUMMAN AIRCRAFT ENGINEERING CORP.
CODE IDENT NO. 26512
ENGINEERING ORDER

DWG. NO. LEO280
EO NO. 1184
CONTROL INFO NO. LDW280B5637

CHG. LTR.		DRAWING NO *		WAS USED ON
C2	RESTRICT	LDW280-17543-29	FOR USE ON LM-6(36) THRU LM-15(45), LFM200 LM-5(35) DVT(70)	LM-5(35) THRU LM-15(45), LFM200 LM5(35), DVT(70)
		LDW280-17543-31, -33	FOR USE ON LM-6(36) THRU LM-15(45), LFM200 LM-5(35)	LM-5(35) THRU LM-15 (45), LFM200 LM-5(35)
		LDW280-17543-17 -19	LM-2(32) THRU LM-4(34) LM-6(36) THRU LM-15(45) LFM 200 LM-5(35)	LM-2(32) THRU LM-15(45) LFM 200 LM-5(35)
C2	REMOVE	LDW280-17539-31		LM-5(35)
H2	REMOVE	LDW280-25662-17-3 -51-3 -53-3		LM-5(35)
D7	REMOVE	LDW280-52663-25 -27 -29		LM-5(35)
A5	REMOVE	LDW280-51517-5		LM-5(35)
C9	REMOVE	LDW280-25661-5-1		LM-5(35)

DETAIL SPEC REQ	☐	CL II ENGRG CHG	☐	CL I ENGRG CHG	✓	LCD 2965 PKG. 5 CCA 1235 (5)

REASON FOR EO: REDESIGN BASE HEAT SHIELD FOR D/E THRUST DECAY

DESCRIPTION OF EO: RESTRICTED EFF OF * BY REMOVING LM-5(35) PRODUCTION EFF

GAEC EO RELEASE C
JK 10/2

MODEL	EFFECTIVITY E I ~~PROCURING ACTIVITY NO.~~	GAEC UNIT NO.	SUB CONTR UNIT NO.
LM		LM-5(35)	

DRAWING CHANGE REQD		DISPOSITION OF PARTS	
REVISE DWG	RECORD EO	REWORK	SCRAP
✓			✓

APPROVED BY	VDI	SUPPORT	RELIAB. GROUP	GROUP LEADER	STRESS GROUP	LIAISON ENGRG	PROJ ENGRG	GOVT
DATE	10/3/68			10-2-68	10/1/68		10/3/68	10-24-68

PRIORITY	DRAWING TITLE	DRAWING NO.	EO NO.
C	NOTED	LEO 280	1184

CDR 10/25/68
ISSUED BY Joe Lucchesi / G. Zeman x86046 SECTION V.D.I. GROUP NO. 335 PL 25

01 NAS 9-1100